This owner's manual applies to the VITARA series.

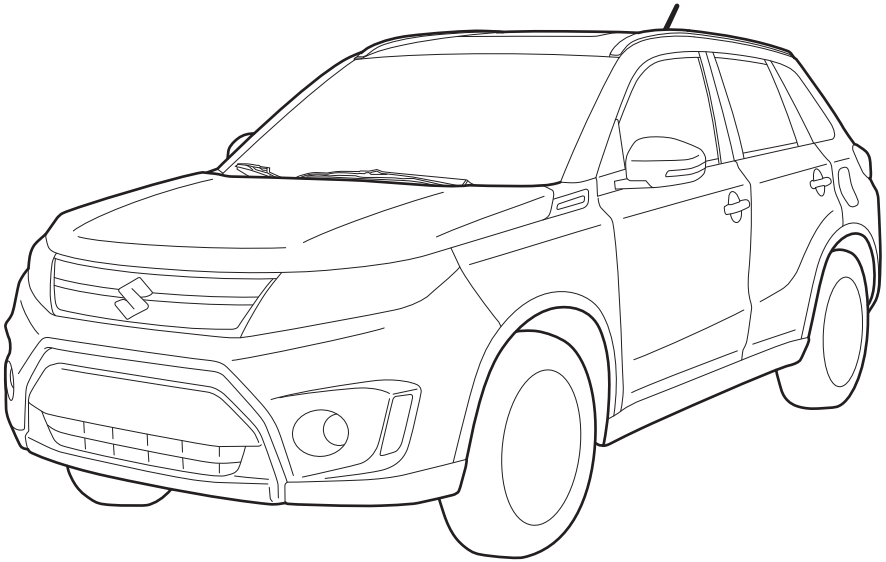

54P000001

NOTE: The illustrated model is one of the VITARA series.

© 2015 **MAGYAR SUZUKI CORPORATION LTD.** All rights reserved.
No part of this document may be reproduced or transmitted in any form or by any means, electronic or mechanical, for any purpose, without the express written permission of Magyar Suzuki Corporation Ltd.

54P00-01E

FOREWORD

This manual should be considered a permanent part of the vehicle and should remain with the vehicle when resold or otherwise transferred to a new owner or operator. Please read this manual carefully before operating your new SUZUKI vehicle and review the manual from time to time. It contains important information on safety, operation and maintenance.

MAGYAR SUZUKI CORPORATION LTD.

All information in this manual is based on the latest product information available at the time of publication. Due to improvements or other changes, there may be discrepancies between information in this manual and your vehicle. MAGYAR SUZUKI CORPORATION reserves the right to make production changes at any time, without notice and without incurring any obligation to make the same or similar changes to vehicles previously built or sold.

This vehicle may not comply with standards or regulations of other countries. Before attempting to register this vehicle in any other country, check all applicable regulations and make any necessary modifications.

NOTE:
Please see the warning label named "Air bag symbol meaning" in "BEFORE DRIVING" section for information on front air bag protection.

IMPORTANT

⚠WARNING/**⚠CAUTION**/*NOTICE*/*NOTE*

Please read this manual and follow its instructions carefully. To emphasize special information, the symbol ⚠ and the words **WARNING**, **CAUTION**, ***NOTICE*** and *NOTE* have special meanings. Pay particular attention to messages highlighted by these signal words:

⚠ WARNING

Indicates a potential hazard that could result in death or serious injury.

⚠ CAUTION

Indicates a potential hazard that could result in minor or moderate injury.

NOTICE

Indicates a potential hazard that could result in vehicle damage.

NOTE:
Indicates special information to make maintenance easier or instructions clearer.

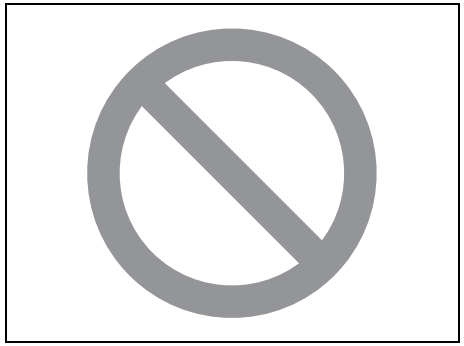

75F135

The circle with a slash in this manual means “Do not do this” or “Do not let this happen”.

MODIFICATION WARNING

⚠ WARNING

Do not modify this vehicle. Modification could adversely affect safety, handling, performance, or durability and may violate governmental regulations. In addition, damage or performance problems resulting from modification may not be covered under warranty.

NOTICE

Improper installation of mobile communication equipment such as cellular telephones, CB (Citizen’s Band) radios or any other wireless transmitters may cause electronic interference with your vehicle’s ignition system, resulting in vehicle performance problems. Consult your SUZUKI dealer or qualified service technician for advice.

INTRODUCTION

Thank you for choosing SUZUKI and welcome to our growing family. Your choice was a wise one; SUZUKI products have great value that will give you driving pleasure for years.

This owner's manual was prepared to give you a safe, enjoyable, and trouble-free experience with your SUZUKI vehicle. In this manual, you will learn about the vehicle's operation, its safety features and maintenance requirements. Please read the manual carefully before operating your vehicle. Afterwards, keep this manual in the glove box for future reference.

Should you resell the vehicle, please leave this manual with it for the next owner.

In addition to the owner's manual, the other booklets provided with your SUZUKI vehicle explain the vehicle's warranties. We recommend you read them as well to familiarize yourself with this important information.

When planning the regular scheduled maintenance of your SUZUKI vehicle, we recommend you visit your local SUZUKI dealer. Their factory-trained technicians will provide the best possible service and use only genuine SUZUKI parts and accessories.

NOTE:
"SUZUKI dealer" means Authorized Suzuki Service Workshop (in Europe).

MAGYAR SUZUKI CORPORATION LTD.

54P00-01E

RECOMMENDATION OF GENUINE SUZUKI PARTS AND ACCESSORIES USE

SUZUKI strongly recommends the use of genuine SUZUKI parts* and accessories. Genuine SUZUKI parts and accessories are built to the highest standards of quality and performance, and are designed to fit your vehicle's exact specifications.

A wide variety of non-genuine replacement parts and accessories for SUZUKI vehicles are currently available in the market. Using these parts and accessories can affect the vehicle performance and shorten its useful life. Therefore, installation of non-genuine SUZUKI parts and accessories is not covered under warranty.

Non-genuine SUZUKI parts and accessories

Some parts and accessories may be approved by certain authorities in your country.
Some parts and accessories are sold as SUZUKI-authorized replacement parts and accessories. Some genuine SUZUKI parts and accessories are sold as re-use parts and accessories. These parts and accessories are non-genuine SUZUKI parts and accessories and use of these parts is not covered under warranty.

Re-use of genuine SUZUKI parts and accessories

The resale or re-use of the following items which could cause hazards for users is expressly forbidden:

- Air bag components and all other pyrotechnic items, including their components (e.g. cushion, control devices and sensors)
- Seat belt system, including their components (e.g. webbing, buckles and retractors)

The air bag and seat belt pretensioner components contain explosive chemicals. These components should be removed and disposed of properly by SUZUKI-authorized service shop or scrap yard to avoid unintended explosion before scrapping.

*The parts remanufactured under SUZUKI's approval can be used as genuine SUZUKI parts in Europe.

SERVICE STATION GUIDE

1. Fuel (see section 1)
2. Engine hood (see section 5)
3. Tire changing tools (see section 8)
4. Engine oil dipstick <Yellow> (see section 7)
5. Engine coolant (see section 7)
6. Windshield washer fluid (see section 7)
7. Battery (see section 7)
8. Tire pressure (see tire information label on driver's door lock pillar)
9. Spare tire (see section 7) / Flat tire repair kit (see section 8)

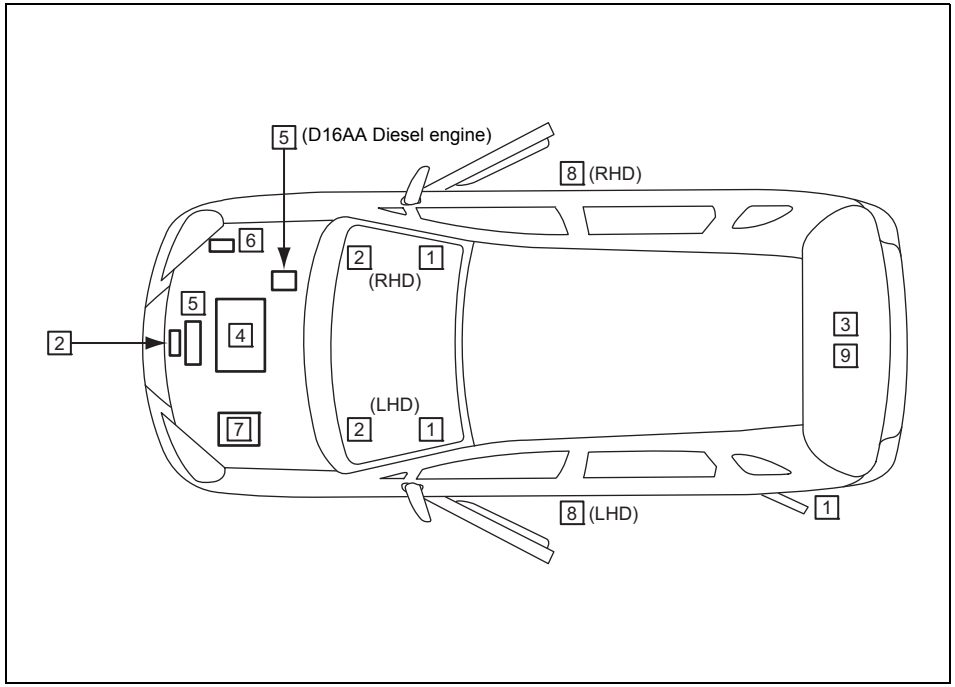

54P000002

LHD: Left Hand Drive
RHD: Right Hand Drive

MEMO

TABLE OF CONTENTS

FUEL RECOMMENDATION	1
BEFORE DRIVING	2
OPERATING YOUR VEHICLE	3
DRIVING TIPS	4
OTHER CONTROLS AND EQUIPMENT	5
VEHICLE LOADING AND TOWING	6
INSPECTION AND MAINTENANCE	7
EMERGENCY SERVICE	8
APPEARANCE CARE	9
GENERAL INFORMATION	10
SPECIFICATIONS	11
SUPPLEMENT	12
INDEX	13

EXTERIOR, FRONT

EXAMPLE

1. Engine hood (P.5-2)
2. Windshield wiper (P.2-110)
3. Sunroof (if equipped) (P.5-9)
4. Roof rails (if equipped) (P.5-19)
5. Front fog light (if equipped) (P.2-107, 7-47)/ Daytime running light (if equipped) (P.2-107, 7-48)
6. Frame hook (P.5-20)
7. Parking sensor (if equipped) (P.3-64)
8. Radar sensor (if equipped) (P.3-58)
9. Daytime running light (if equipped) (P.2-107, 7-48)
10. Headlight (P.2-102, 7-45)
11. Outside rearview mirror (P.2-20)
12. Door locks (P.2-2)

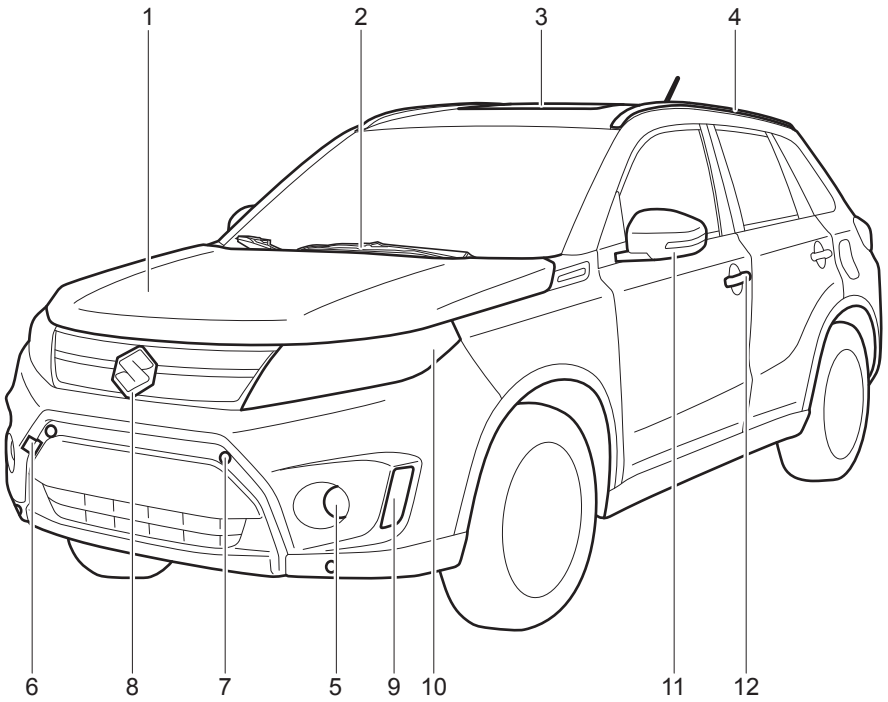

54P000003

EXTERIOR, REAR

1. Radio antenna (P.5-38)
2. High-mount stop light (P.11-3)
3. Rear window wiper (P.2-113)
4. Fuel filler cap (P.5-1)
5. Rear combination light (P.7-50)
6. Reversing light (P.7-52)
7. Rearview camera (if equipped) (P.3-71)
8. Rear fog light (if equipped) (P.2-107, 7-53)
9. License plate light (P.7-52)
10. Tailgate (P.2-5)

EXAMPLE

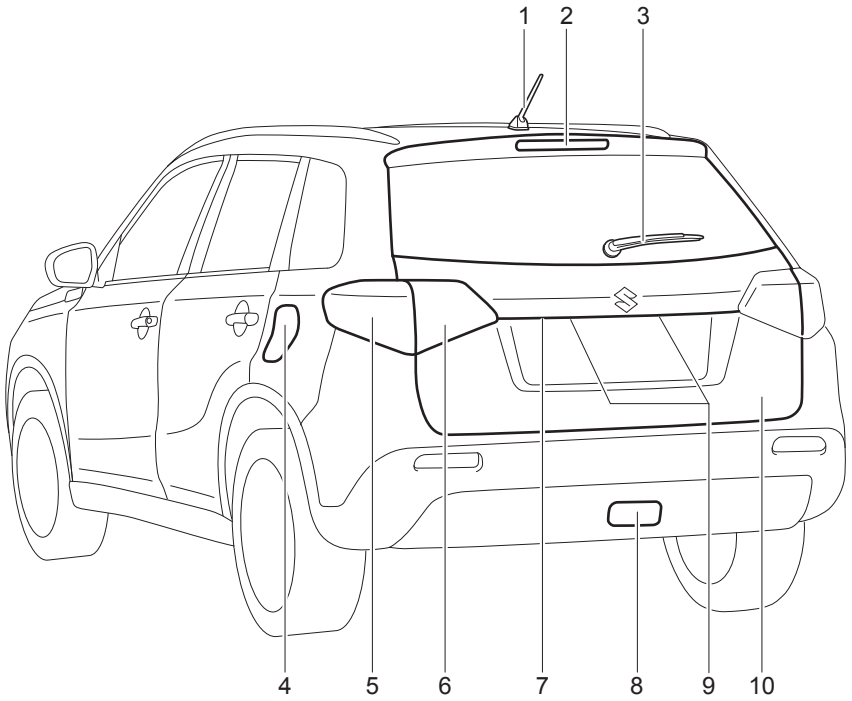

54P000004

INTERIOR, FRONT

EXAMPLE

1. Electric window controls (if equipped) (P.2-17)/ Electric mirror control switch (P.2-20)/ Outside rearview mirror folding switch (if equipped) (P.2-21)
2. Front passenger's front air bag (P.2-51)
3. Glove box (P.5-12)
4. Front seats (P.2-21)/ Side air bags (if equipped) (P.2-55)
5. Parking brake lever (P.3-10)
6. Rear console box (P.5-14)
7. Driving mode switch (if equipped) (P.3-23)

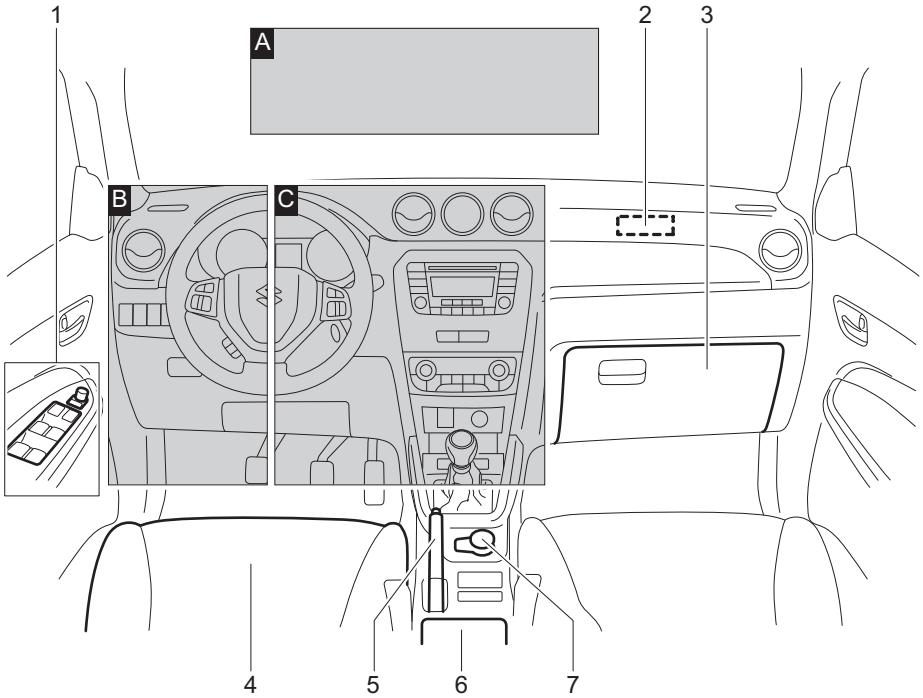

54P000005

1. Sun visor (P.5-4)
2. Front interior light (P.5-5, 7-54)
3. Inside rearview mirror (P.2-20)
4. Overhead console (if equipped) (P.5-12)
5. Sunroof switch (if equipped) (P.5-9)
6. Hands-free microphone (if equipped) (P.5-70)

VIEW A

EXAMPLE

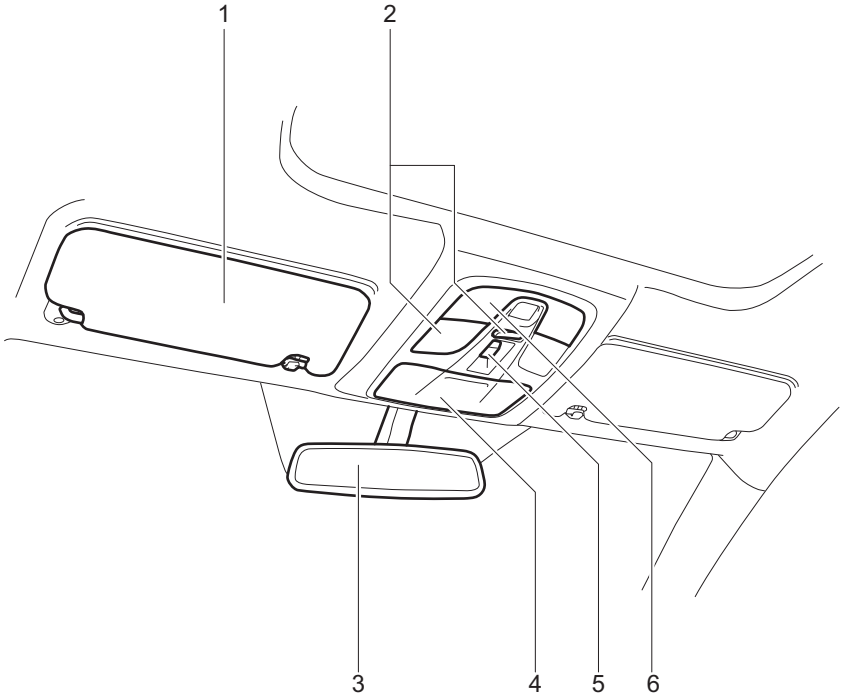

54P000006

1. Lighting control lever (P.2-102)/
   Turn signal control lever (P.2-108)
2. Remote audio controls (if equipped) (P.5-81)
3. Driver's front air bag (P.2-51)
4. Engine hood release handle (P.5-2)
5. Headlight leveling switch (if equipped) (P.2-108)/
   Front fog light switch (if equipped) (P.2-107)/
   ESP® OFF switch (P.3-78)/
   Parking sensor switch (if equipped) (P.3-64)/
   "ENG A-STOP OFF" switch (if equipped) (P.3-29)/
   Hill descent control switch (if equipped) (P.3-80)/
   FAR/NEAR setting switch (if equipped) (P.3-55)/
   Radar brake support OFF switch (if equipped) (P.3-57)
6. Driver's knee air bag (if equipped) (P.2-51)
7. Tilt/telescoping steering lock lever (P.2-114)
8. Fuel lid opener lever (P.5-1)

VIEW B

EXAMPLE

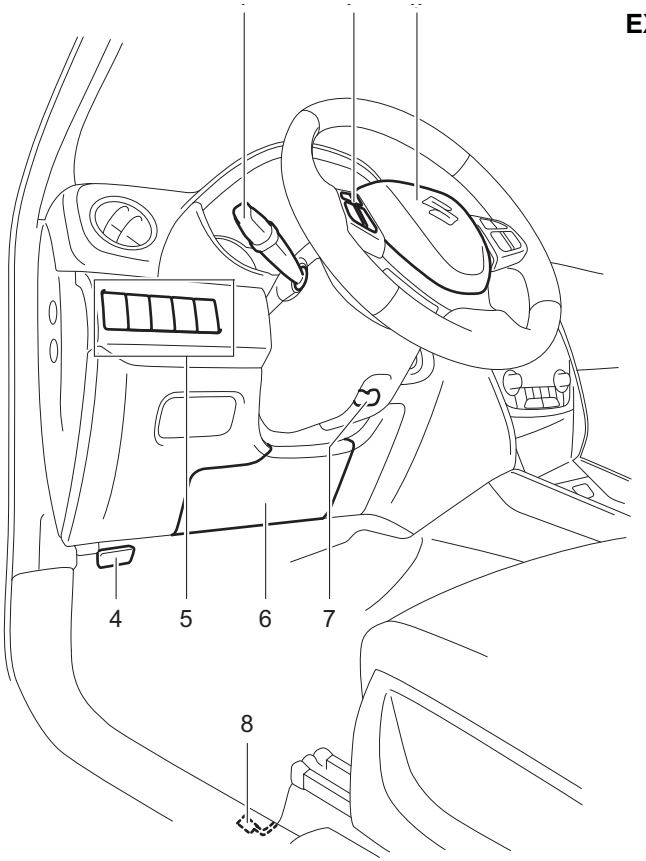

54P000007

1. Adaptive cruise control switch (if equipped) (P.3-35)/ Cruise control switches (if equipped) (P.3-42)/ Speed limiter switches (if equipped) (P.3-45)
2. Instrument cluster (P.2-63)/ Information display (P.2-66)
3. Windshield wiper and washer lever (P.2-110)/ Rear window wiper/ washer switch (P.2-113)
4. Audio (if equipped) (P.5-40)
5. Hazard warning switch (P.2-110)
6. Front passenger air bag deactivation system indicator (if equipped) (P.2-60)/ Theft deterrent alarm system (if equipped) (P.12-5)/Theft deterrent light (if equipped) (P.2-16)
7. Fuses (P.7-43)
8. Ignition switch (vehicle without keyless push start system) (P.3-3)
9. Engine switch (vehicle with keyless push start system) (P.3-5)
10. Gearshift lever (P.3-19)
11. Front seat heater switch (if equipped) (P.2-23)
12. USB socket (if equipped) (P.5-9)
13. Accessory socket (P.5-8)
14. Heating and air conditioning system (P.5-23)/ Heated rear window switch / heated outside rearview mirrors switch (if equipped) (P.2-115)
15. Clock (if equipped) (P.5-15)

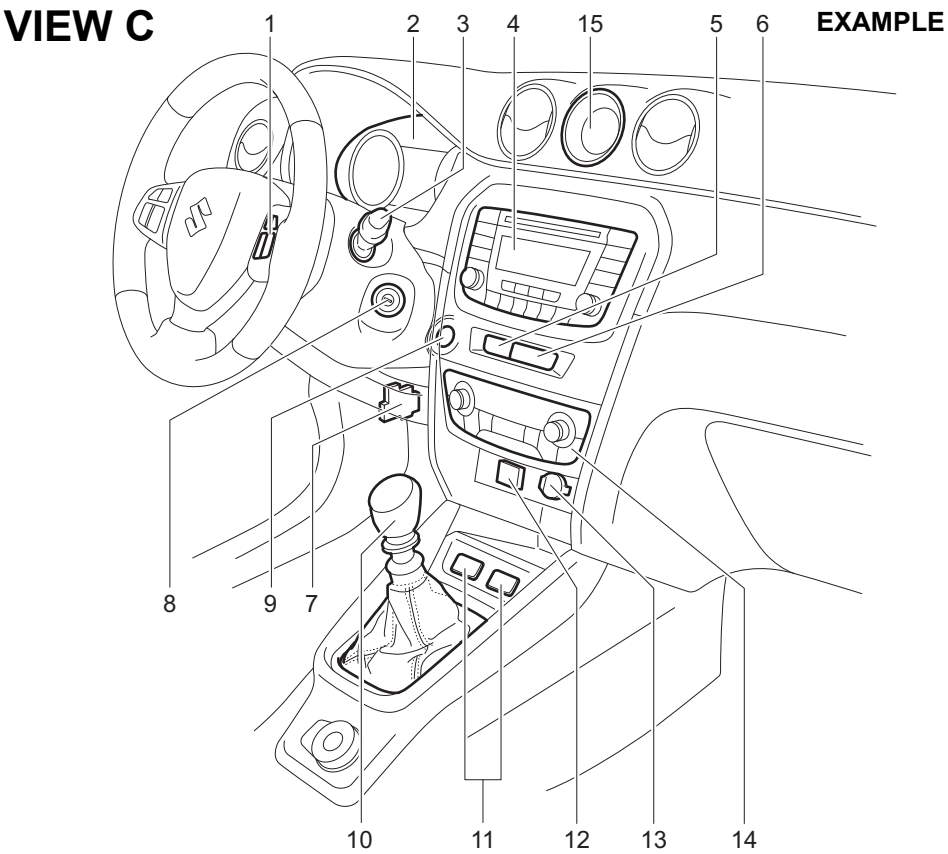

INTERIOR, REAR

EXAMPLE

1. Seat belts (P.2-28)
2. Center interior light (P.5-5, 7-54)
3. Assist grip (P.5-11)
4. Lap-shoulder belt with detachable connector (P.2-31)
5. Side curtain air bags (if equipped) (P.2-55)
6. Rear seats (P.2-24)

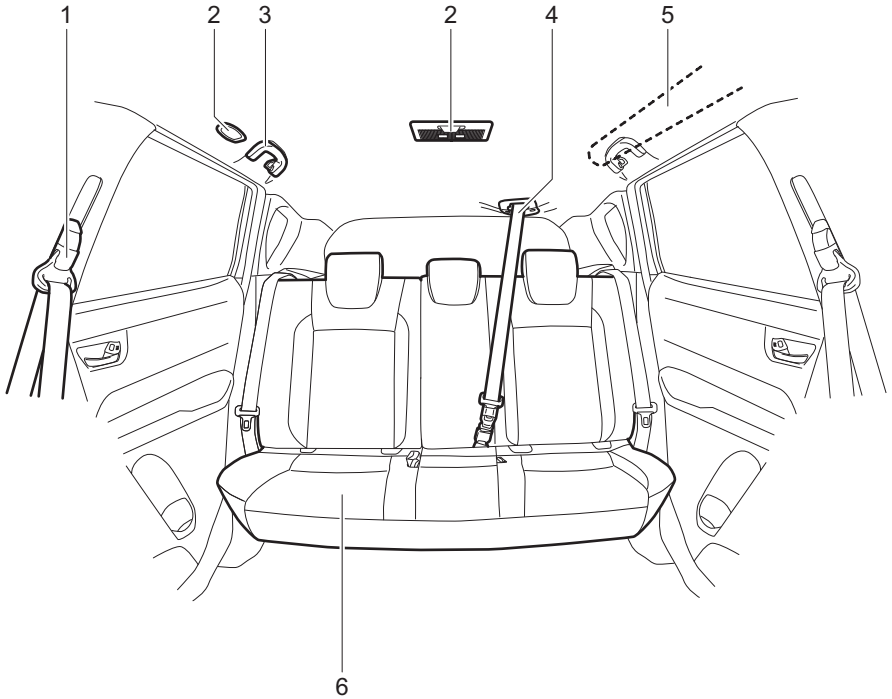

54P000009

LUGGAGE COMPARTMENT

1. Shopping hook (P.5-16)
2. Luggage compartment cover (P.5-18)
3. Accessory socket (if equipped) (P.5-8)
4. Luggage compartment light (if equipped) (P.5-5, 7-54)
5. Cargo net hooks (if equipped) (P.5-17)
6. Luggage compartment pocket (P.5-15)
7. Luggage restraint loops (P.5-17)
8. Spare tire (if equipped) (P.7-38, 8-1)
9. Wheel brace (P.8-1)
10. Jack (P.8-1)
11. Jack handle (P.8-1)
12. Towing hook (P.5-20)
13. Luggage compartment board (if equipped) (P.5-18)
14. Flat tire repair kit (if equipped) (P.8-5)

EXAMPLE

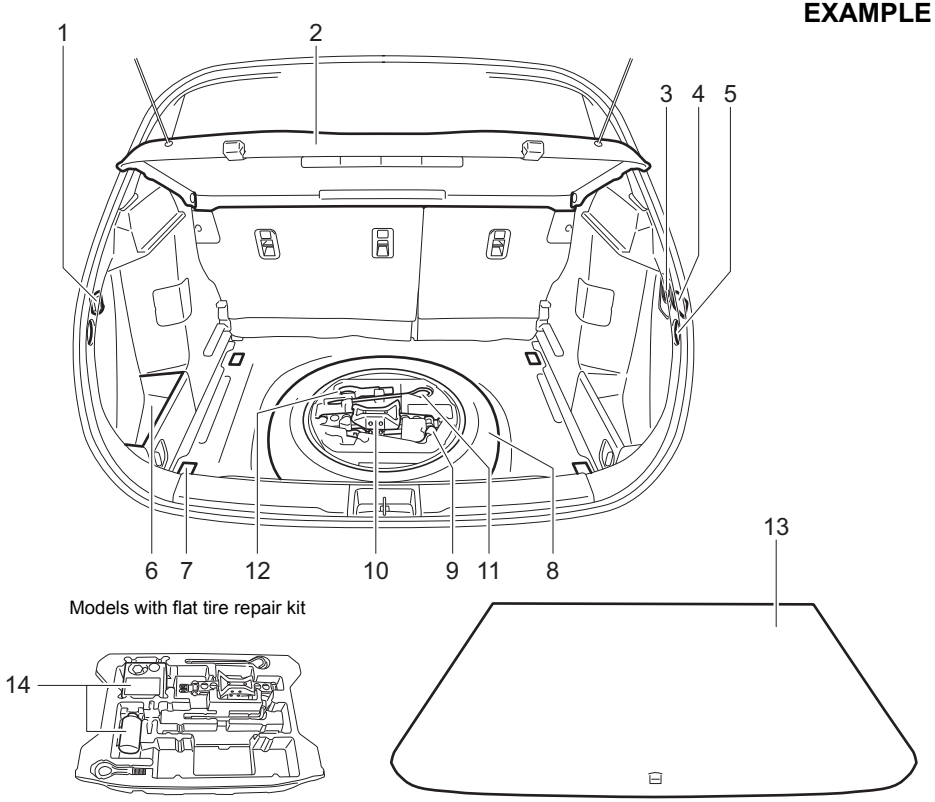

Models with flat tire repair kit

54P000010

MEMO

FUEL RECOMMENDATION

Fuel recommendation 1-1

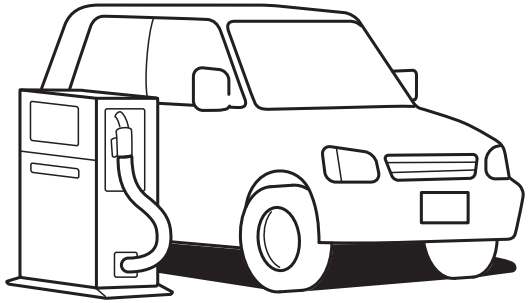

65D394

Fuel recommendation

Gasoline engine

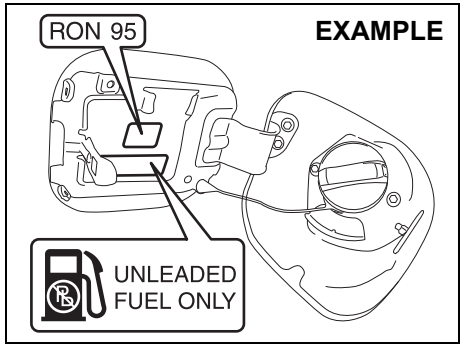

54P000101

You **must** use unleaded gasoline with an octane number (RON) of 91 or higher (or RON of 95 or higher if it is stated on the fuel filler lid). These vehicles are also identified by a label attached near the fuel filler pipe that states: “UNLEADED FUEL ONLY”, “NUR UNVERBLEITES BENZIN”, “ENDAST BLYFRI BENSIN” or “SOLO GASOLINA SIN PLOMO”.

If a “RON **95**” label is attached, you must use unleaded gasoline with an octane number (RON) of **95** or higher.

Gasoline-ethanol blends
Blends of unleaded gasoline and ethanol (grain alcohol), also known as gasohol, are commercially available in some areas. Blends of this type may be used in your vehicle if they are no more than 10% ethanol. Check that this gasoline-ethanol blend has octane ratings no lower than those recommended for gasoline.

Gasoline-methanol blends
Blends of unleaded gasoline and methanol (wood alcohol) are also commercially available in some areas. DO NOT USE fuels containing more than 5% methanol under any circumstances. Fuel system damage or vehicle performance problems resulting from the use of such fuels are not the responsibility of SUZUKI and may not be covered under the New Vehicle Warranty.
Fuels containing 5% or less methanol may be suitable for use in your vehicle if they contain cosolvents and corrosion inhibitors.

NOTE:
If you are not satisfied with the driveability or fuel economy of your vehicle when you use a gasoline-alcohol blend, you should switch back to unleaded gasoline containing no alcohol.

NOTICE

The fuel tank has an air space to allow for fuel expansion in hot weather. If you continue to add fuel after the filler nozzle has automatically shut off or an initial blowback occurs, the air chamber will become full. Exposure to heat when fully fuelled in this manner will result in leakage due to fuel expansion. To prevent such fuel leakage, stop filling after the filler nozzle has automatically shut off, or when initial vent blowback occurs, if using an alternative non-automatic system.

NOTICE

Be careful not to spill fuel containing alcohol while refueling. If fuel is spilled on the vehicle body, wipe it up immediately. Fuels containing alcohol can cause paint damage, which is not covered under the New Vehicle Limited Warranty.

NOTE:
For Mexico:
For additional instruction, refer to “SUPPLEMENT” section in the end of this book.

Diesel engine

The diesel fuel should be with cetane index higher than 50, sulfur content less than 10 ppm (parts per million) and up to 7 % of biodiesel (B7) as FAME (Fatty Acid Methyl Ester). You should use the diesel fuel conformable to EN590 that corresponds to Euro VI emission control.
Do not use marine diesel fuel, heating oils, etc. If you use improper diesel fuel, it may cause serious engine damage.

NOTICE

The fuel tank has an air space to allow for fuel expansion in hot weather. If you continue to add fuel after the filler nozzle has automatically shut off or an initial blowback occurs, the air chamber will become full. Exposure to heat when fully fuelled in this manner will result in leakage due to fuel expansion. To prevent such fuel leakage, stop filling after the filler nozzle has automatically shut off, or when using an alternative non-automatic system, initial vent blowback occurs.

NOTICE

Be careful not to spill fuel containing alcohol while refueling. If fuel is spilled on the vehicle body, wipe it off immediately. Fuels containing alcohol can cause paint damage, which is not covered under the New Vehicle Limited Warranty.

MEMO

BEFORE DRIVING

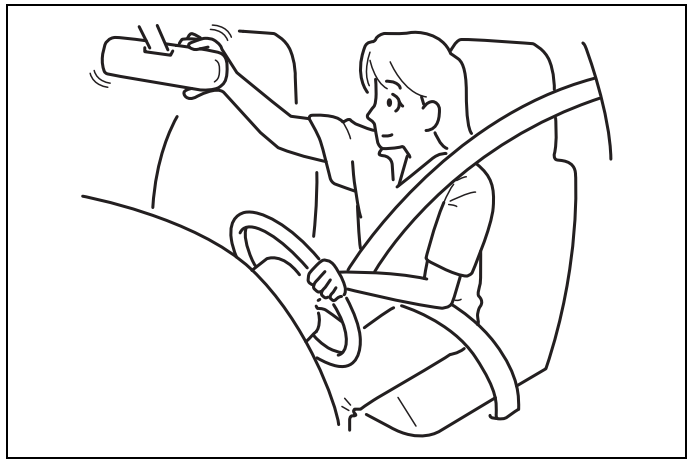

60G404

Keys 2-1
Door locks 2-2
Keyless push start system remote controller /
Keyless entry system transmitter 2-6
Theft deterrent light (if equipped) 2-16
Windows 2-16
Mirrors 2-20
Front seats 2-21
Rear seats 2-24
Seat belts and child restraint systems 2-28
Child restraint system 2-40
Supplemental restraint system (air bags) 2-50
Instrument cluster 2-63
Speedometer 2-64
Tachometer 2-64
Fuel gauge 2-64
Temperature gauge 2-65
Brightness control 2-65
Information display 2-66
Warning and indicator lights 2-88
Lighting control lever 2-102
Front fog light switch (if equipped) 2-107
Headlight leveling switch (if equipped) 2-108
Turn signal control lever 2-108
Hazard warning switch 2-110
Windshield wiper and washer lever 2-110
Tilt/telescoping steering lock lever 2-114
Horn 2-115
Heated rear window switch / heated outside rearview
mirror switch (if equipped) 2-115

Keys

EXAMPLE

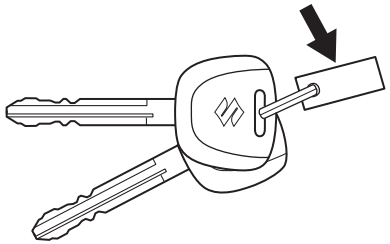

54G489

Your vehicle comes with a pair of identical keys. Keep the spare key in a safe place. One key can open all of the locks on the vehicle.

The key identification number is stamped on a metal tag provided with the keys or on the keys. Keep the tag (if equipped) in a safe place. If you lose your keys, you will need this number to have new keys made. Write the number below for your future reference.

KEY NUMBER:

Immobilizer system

This system is designed to help prevent vehicle theft by electronically disabling the engine starting system.
The engine can be started only with your vehicle's original immobilizer ignition key or keyless push start system remote controller, which has an electronic identification code programmed into it. The key or remote controller communicates the identification code to the vehicle when the ignition switch is turned to "ON" position or the engine switch is pressed to change the ignition mode to "ON". If you need to make spare keys or remote controllers, see your SUZUKI dealer. The vehicle must be programmed with the correct identification code for the spare. A key made by an ordinary locksmith will not work.

80JM122

If the immobilizer/keyless push start system warning light blinks when the ignition switch is in "ON" position or the ignition mode is "ON", the engine will not start.

NOTE:
If the immobilizer/keyless push start system warning light blinks or comes on, a message may be shown on the information display.

For vehicles without a keyless push start system
If this light blinks, turn the ignition switch to "LOCK" position, and then turn it back to "ON" position.
If the light still blinks after the ignition switch is turned back to "ON" position, there may be something wrong with your key or with the immobilizer system. Ask your SUZUKI dealer to have the system inspected.

For vehicles with a keyless push start system
If this light blinks, change the ignition mode to "LOCK" (OFF), and then change it back to "ON". Also refer to "If the master warning indicator light blinks and the engine cannot be started" in "Starting engine (vehicle with keyless push start system)" in "OPERATING YOUR VEHICLE" section.
If the light still blinks after the ignition mode is changed back to "ON", there may be something wrong with your key or with the immobilizer system. Ask your SUZUKI dealer to have the system inspected.

The immobilizer/keyless push start system warning light may also blinks if the remote controller is not in the vehicle when you close the door or attempt to start the engine.

NOTE:
- *If you lose your immobilizer ignition key or remote controller, ask your SUZUKI dealer as soon as possible to deactivate the lost one, and to make a new key or remote controller.*
- *If you own other vehicles with immobilizer keys, keep those keys away from the ignition switch or the engine switch when using your SUZUKI vehicle. Otherwise, or the engine may not be started because they may interfere with your SUZUKI vehicle's immobilizer system.*
- *If you attach any metal objects to the immobilizer key or remote controller, it may not start the engine.*

NOTICE

The immobilizer key and remote controller are sensitive electronic instruments. To avoid damaging them:
- **Do not expose them to impacts, moisture or high temperature such as on the dashboard under direct sunlight.**
- **Keep them away from magnetic objects.**

This immobilizer system, model I54P0 for keyless entry model and 37290-54P0 for keyless engine start model are in compliance with the essential requirements and other provisions of Directive 1999/5/EC.

Ignition key reminder (if equipped)

A buzzer sounds intermittently to remind you to remove the ignition key if it is in the ignition switch when the driver's door is opened.

Door locks

Side door locks

EXAMPLE

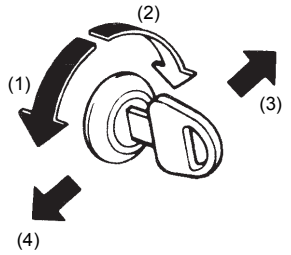

60B008

(1) LOCK
(2) UNLOCK
(3) Rear
(4) Front

To lock a driver's door from the outside of the vehicle:

- Insert a key and turn the top of the key toward the front of the vehicle, or
- Turn the lock knob forward, then pull and hold the door handle as you close the door.

To unlock a driver's door from the outside of the vehicle, insert the key and turn the top of the key toward the rear of the vehicle.

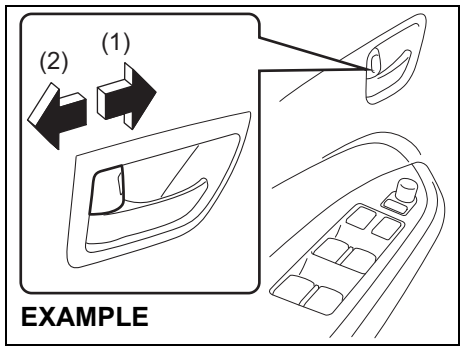

54P000201

(1) LOCK
(2) UNLOCK

To lock a door from the inside of the vehicle, turn the lock knob forward. Turn the lock knob backward to unlock the door.

To lock a rear door from the outside of the vehicle, turn the lock knob forward and close the door. You do not need to pull and hold the door handle as you close the door.

NOTE:
Hold the door handle when you close a locked front door, or the door will not remain locked.

Central door locking system

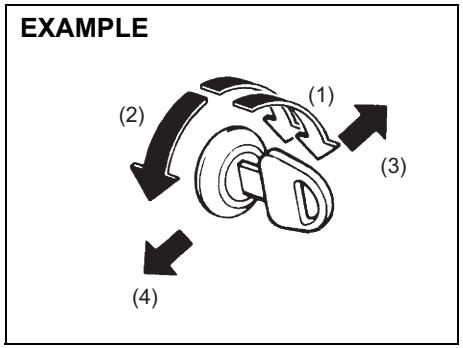

54P000251

(1) UNLOCK
(2) LOCK
(3) Rear
(4) Front

You can lock and unlock all doors (including the tailgate) simultaneously by using the key in the driver's door lock.

To lock all doors simultaneously, insert the key in the driver's door lock and turn the top of the key toward the front of the vehicle once.

To unlock all doors simultaneously, insert the key in the driver's door lock and turn the top of the key toward the rear of the vehicle twice.

NOTE:
You can switch the function that unlocks all doors from requiring two turns to requiring one turn, and vice versa, via the information display setting mode. For details on how to use the information display, refer to "Information display" in this section.

To unlock the driver's door only, insert the key in that door lock and turn the top of the key toward the rear of the vehicle once.

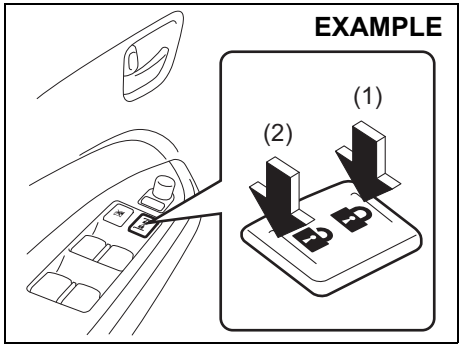

54P000202

(1) LOCK
(2) UNLOCK

You can also lock or unlock all doors by pressing the front or rear of the switch, respectively.

NOTE:
- *You can also lock or unlock all doors by operating the transmitter or remote controller. Refer to "Keyless push start system remote controller / Keyless entry system transmitter" in this section.*
- *If your vehicle is equipped with the keyless push start system, you can also lock or unlock all doors by pushing the request switch. Refer to "Keyless push start system remote controller / Keyless entry system transmitter" in this section.*

Dead lock system (if equipped)

This system is designed to help prevent tamper-unlocking of the door locks.

You can activate this system by turning the key in the driver's door lock.

NOTE:
- *You can also activate the dead lock system by operating the transmitter or remote controller. Refer to "Keyless push start system remote controller / Keyless entry system transmitter" in this section.*
- *If your vehicle is equipped with the keyless push start system, you can also activate the dead lock system by pushing the request switch. Refer to "Keyless push start system remote controller / Keyless entry system transmitter" in this section.*

⚠ WARNING

Do not activate the dead lock system if there are occupants in the vehicle. They will be locked in the vehicle and unable to unlock the doors from inside.

NOTE:
- *The dead lock system will not operate if one or more door(s) is (are) not closed and latched completely. Check that all doors (including the tailgate) are completely closed and latched when activating the dead lock system.*
- *The dead lock system is released automatically, allowing all the side doors to be unlocked when the ignition switch is turned to "ON" position or the engine switch is pressed to change the ignition mode to "ON".*

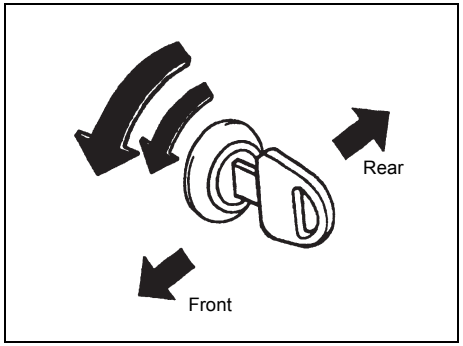

83E105

To activate this system:
Insert the key in the driver's door lock and turn the top of the key toward the front of the vehicle twice within 3 seconds.

You cannot use the lock knobs to unlock the side doors when this system is activated.

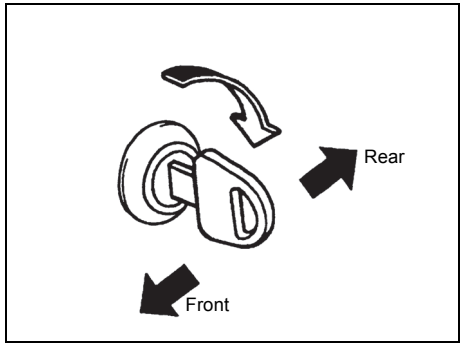

54P000259

To release this system:
To unlock the driver's door, insert the key in the driver's door lock and turn the top of the key toward the rear of the vehicle once.

NOTE:
You can switch the function that unlocks all doors from requiring two turns to requiring one turn, and vice versa, via the information display setting mode. For details on how to use the information display, refer to "Information display" in this section.

Child-proof locks (rear door)

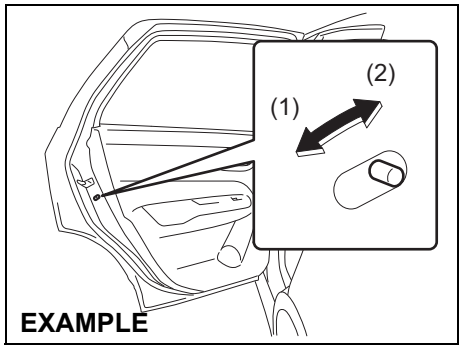

54P000203

(1) LOCK
(2) UNLOCK

Each of the rear doors is equipped with a child-proof lock which can be used to help prevent unwanted opening of the door from inside the vehicle. When the lock lever is in LOCK position (1), the rear door can only be opened from outside. When the lock lever is in UNLOCK position (2), the rear door can be opened from inside or outside.

⚠ WARNING

Place the child-proof lock in LOCK position whenever children are seated in the rear.

Tailgate

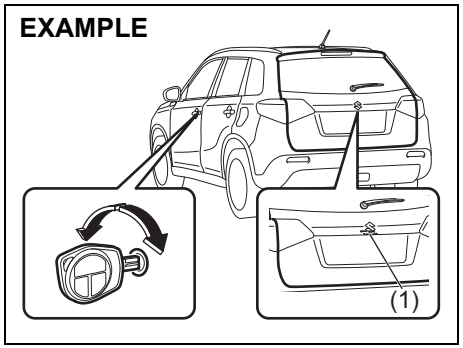

54P000204

(1) Tailgate unlatch switch

You can lock and unlock the tailgate by using the key in the driver's door lock.

To open the tailgate, push and hold the tailgate unlatch switch (1) and lift the tailgate.

NOTE:
When the tailgate is closed incompletely, follow the procedure below:
1) Push the tailgate unlatch switch (1) and open the tailgate.
2) After a few seconds, close the tailgate.
3) Check that the tailgate is closed completely.

⚠ WARNING

Always check that the tailgate is closed and latched securely. Completely closing the tailgate helps prevent occupants from being thrown from the vehicle in the event of an accident. Completely closing it also helps keep exhaust gases from entering the vehicle.

If you cannot unlatch the tailgate by pushing the unlatch switch (1) due to a discharged battery or malfunction, follow the procedure below to unlatch the tailgate from inside the vehicle.

1) Fold the rear seat forward for easier access. Refer to “Folding rear seats” section for details on how to fold the rear seat forward.

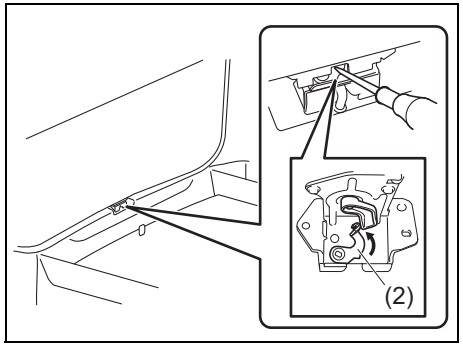

54P000205

2) Push open the tailgate from inside by pushing up on the emergency lever (2) using a flat-bladed screwdriver or the jack handle. The tailgate will be latched again by closing the tailgate simply.

If the tailgate cannot be unlatched by pushing the unlatch switch (1), have the vehicle inspected by your SUZUKI dealer.

⚠ CAUTION

Check that there is no one near the tailgate when pushing open the tailgate from inside the vehicle.

Keyless push start system remote controller / Keyless entry system transmitter

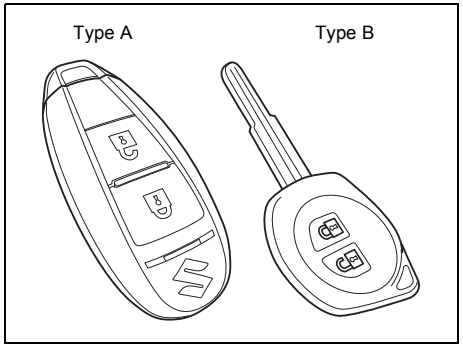

68LM205

Your vehicle is equipped with either a keyless push start system remote controller (Type A) or a keyless entry system transmitter (Type B). The remote controller has a keyless entry system and a keyless push start system. The transmitter has only a keyless entry system. For details, refer to the following explanations.

⚠ WARNING

Radio waves from the keyless push start system antenna(s) may interfere with operation of electrical medical equipment such as pacemakers. Failure to take the precautions listed below can increase the risk of severe injury or death due to radio wave interference.

- **Anyone who uses electrical medical equipment such as a pacemaker should consult the medical equipment supplier or their medical advisor about whether radio waves from the antenna(s) can interfere with the medical equipment.**
- **If radio wave interference is a concern, have the function of the antenna(s) disabled by your SUZUKI dealer.**

Keyless push start system remote controller (Type A)

The remote controller enables the following operations:

- You can lock or unlock the doors by operating LOCK/UNLOCK buttons on the remote controller. Refer to the explanation in this section.
- You can lock or unlock the doors by pushing the request switch. For details, refer to the explanation in this section.
- You can start the engine without using an ignition key. For details, refer to “Engine switch” in “OPERATING YOUR VEHICLE” section.

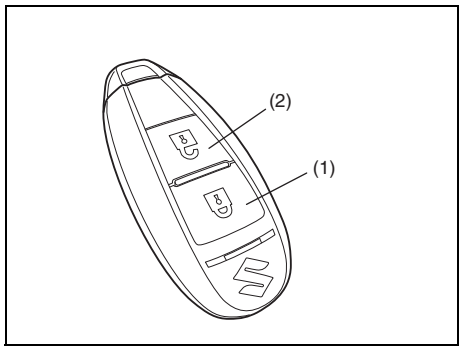

68LM206

(1) LOCK button
(2) UNLOCK button

There are two ways to lock or unlock all doors (including the tailgate) simultaneously by operating the remote controller near the vehicle.

Central door locking system

- To lock all doors, push LOCK button (1) once.
- To unlock only the driver’s door, push UNLOCK button (2) once.
- To unlock other doors, push UNLOCK button (2) once again.

NOTE:
You can switch the function that unlocks all doors from requiring two pushes to requiring one push, and vice versa, via the information display setting mode. For details on how to use the information display, refer to “Information display” in this section.

The turn signal lights will flash once and the exterior buzzer will sound once when the doors are locked.

Central door locking system with the dead lock system (if equipped)

If you want to prevent tamper-unlocking of the door locks, use this method. When the dead lock system is activated, operating the lock knobs will not unlock the side doors.

To activate this system:
To lock all doors, push LOCK button (1) twice within 3 seconds.

To release this system:
- To unlock only the driver's door, push UNLOCK button (2) once.
- To unlock other doors, push UNLOCK button (2) once again.

NOTE:
You can switch the function that unlocks all doors from requiring two pushes to requiring one push, and vice versa, via the information display setting mode. For details on how to use the information display, refer to "Information display" in this section.

⚠ WARNING

Do not activate the dead lock system if there are occupants in the vehicle. They will be locked in the vehicle and cannot unlock the doors from inside.

The turn signal lights will flash once and the exterior buzzer will sound once when the doors are locked, and then the turn signal lights will flash once and the exterior buzzer will sound once again when the doors are locked with the dead lock system.

With the remote controller inside the vehicle, if you push LOCK button on the remote controller, the exterior buzzer will sound and doors cannot be locked.

When the doors are unlocked:
- The turn signal lights will flash twice and the exterior buzzer will sound twice.
- If the interior light switch is in DOOR position, the interior light will turn on for about 15 seconds and then fade out. If you press the engine switch during this time, the light will start to fade out immediately.

Check that the doors are locked after you operate LOCK button (1).
If no door is opened within about 30 seconds after UNLOCK button (2) is operated, the doors will automatically lock again.

NOTE:
- *The maximum operating distance of the remote controller is about 5 m (16 ft.), but this can vary depending on the surroundings, especially near other transmitting devices such as radio towers or CB (Citizen's Band) radios.*
- *The door locks cannot be operated with the remote controller if the ignition mode is in any other mode than "LOCK" (OFF).*
- *When any door is open, if you push LOCK button on the remote controller, the exterior buzzer will sound and doors cannot be locked.*
- *If you lose one of the remote controllers, ask your SUZUKI dealer as soon as possible for replacement. Have your dealer program the new remote controller code in your vehicle's memory so that the old code is erased.*

Keyless unlocking/locking using the request switches

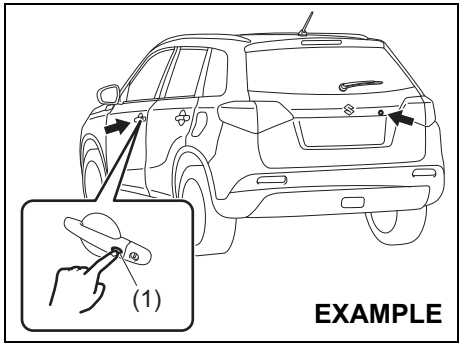

54P000206

When the remote controller is within the operating range described in this section, you can lock or unlock the doors (including the tailgate) by pushing the request switch (1) on the driver's door handle, front passenger's door handle or tailgate. If you want to prevent tamper-unlocking of the door locks, you can activate the dead lock system.

When all doors are unlocked:
- To lock all doors, push one of the request switches once.
- To lock all doors with the dead lock system, push one of the request switches twice within about 3 seconds.

The turn signal lights will flash once and the exterior buzzer will sound once when the doors are locked, and then the turn signal lights will flash once and the exterior buzzer will sound once again when the doors are locked with the dead lock system.

⚠ WARNING

Do not activate the dead lock system if there are occupants in the vehicle. They will be locked in the vehicle and cannot unlock the doors from inside.

To unlock a door or all doors:
- Push one of the request switches once to unlock only one door.
- Push one of the request switches twice to unlock all doors.

NOTE:
You can switch the function that unlocks all doors from requiring two pushes to requiring one push, and vice versa, via the information display setting mode. For details on how to use the information display, refer to "Information display" in this section.

When the doors are unlocked:
- The turn signal lights will flash twice and the exterior buzzer will sound twice.
- If the interior light switch is in DOOR position, the interior light will turn on for about 15 seconds and then fade out. If you press the engine switch during this time, the light will start to fade out immediately.

Check that the doors are locked after you operate the request switch to lock the doors.

NOTE:
- *The door locks cannot be operated by the request switch under the following conditions:*
  - *If any door is open or is not completely closed.*
  - *If the ignition mode is in any other mode than "LOCK" (OFF).*
- *If no doors are opened within about 30 seconds after unlocking the doors by pushing the request switch, the doors will be locked again automatically.*

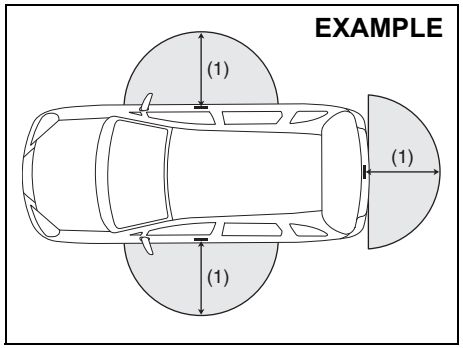

80J056

(1) 80 cm (2 1/2 feet)

When the remote controller is within approximately 80 cm (2 1/2 feet) from a front door handle or the tailgate switch, you can lock or unlock the doors by pushing the request switch.

NOTE:
- *If the remote controller is outside the request switch operating range described above, you will not be able to operate the request switch.*
- *If the battery of the remote controller runs down or there are strong radio waves or noise, the request switch operating range may be reduced or the remote controller may be inoperative.*
- *If the remote controller is too close to the door glass, the request switches may not operate.*
- *If a spare remote controller is in the vehicle, the request switches may not operate normally.*
- *The remote controller will only operate a request switch if it is within the switch's operating range. For example, if the remote controller is within the operating range of the driver's door request switch but not the front passenger's door request switch or the tailgate request switch, the driver's door switch can be operated but the front passenger's door switch or tailgate switch cannot be operated.*

NOTICE

The remote controller is a sensitive electronic instrument. To avoid damaging the remote controller:
- **Do not expose it to impacts, moisture or high temperature such as by leaving it on the dashboard under direct sunlight.**
- **Keep the remote controller away from magnetic objects such as a television.**

NOTE:
The keyless push start system may not function correctly in certain environments or under certain operating conditions such as the following:
- *When there are strong signals coming from a television, power station or a cellular phone.*
- *When the remote controller is in contact with or covered by a metal object.*
- *When a radio wave type remote keyless entry is used nearby.*
- *When the remote controller is placed near an electronic device such as personal computer.*

Some additional precautions you should take and information you should be aware of are:
- *Check that the key is stowed in the remote controller. If the remote controller becomes unreliable, you will not be able to lock or unlock the doors.*
- *Check that the driver always carries the remote controller.*
- *If you lose one of the remote controllers, ask your SUZUKI dealer as soon as possible for a replacement. Have your dealer program the new remote controller code in your vehicle's memory so that the old code is erased.*
- *You can use up to four remote controllers and the keys for your vehicle. Ask your SUZUKI dealer for details.*
- *The battery life of the remote controller is about two years, but it can vary depending on usage conditions.*

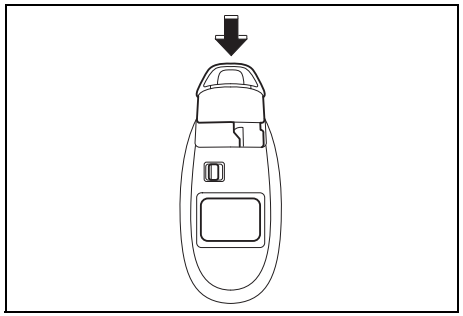

57L21016

To stow the key into the remote controller, push the key in the remote controller until you hear a click.

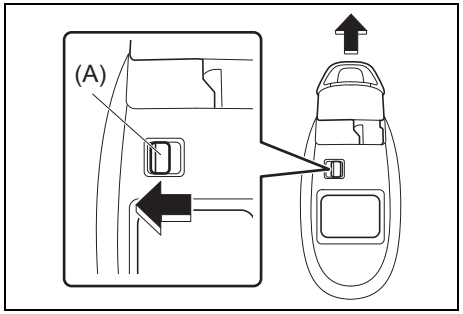

54P000263

To remove the key from the remote controller, push the button (A) in arrow direction and pull the key out from the remote controller.

Request switch warning buzzer
This exterior buzzer beeps for about 2 seconds in the following conditions to warn you that the request switch is not working:
- The request switch is pressed after all doors are closed with the ignition mode changed to "ACC" or "ON" by pressing the engine switch.
- The request switch is pressed in any of the following conditions after changing the ignition mode to "LOCK" (OFF) by pressing the engine switch.
  – The remote controller is left inside the vehicle.
  – Any door (including the tailgate) is open.

Press the request switch again after doing the following:
With the ignition mode changed to “LOCK” (OFF) by pressing the engine switch, bring out the remote controller if it is inside the vehicle and check that all doors are completely closed.

Reminder function

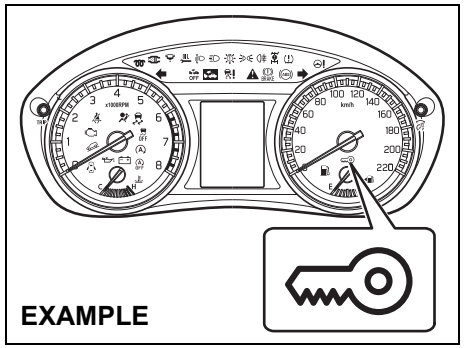

54P000207

If the remote controller is not in the vehicle under the following conditions, the buzzer sounds intermittently for about 2 seconds and the immobilizer/keyless push start system warning light on the instrument cluster blinks:
When one or more doors are opened and all of the doors are later closed with the ignition in any other mode than “LOCK”.

The indicator light will turn off within several seconds after the remote controller is returned to an area of the vehicle other than the rear luggage area.

If the remote controller is left in the vehicle and you lock the driver’s door or front passenger’s door as described below, the door will be automatically unlocked.

- If you open the driver’s door and lock the door by turning the lock knob forward or pushing the power door locking switch, the driver’s door will be automatically unlocked.
- If you open the front passenger’s door and lock the door by turning the lock knob forward or pushing the power door locking switch, the front passenger’s door will be automatically unlocked.

NOTE:
- *The reminder will not operate when the remote controller is on the instrument panel, in the glove box, in a storage compartment, in the sun visor or on the floor, etc.*
- *Check that the driver always carries the remote controller.*
- *Do not leave the remote controller in the vehicle when leaving the vehicle.*

Battery replacement
If the remote controller becomes unreliable, replace the battery.

To replace the battery of the remote controller:

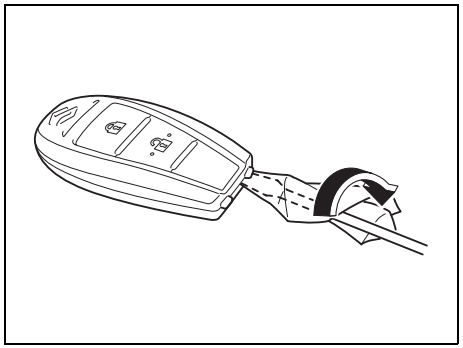

71LMT0201

1) Pull the key out from the remote controller.
2) Insert a flat-bladed screwdriver covered with a soft cloth in the slot of the remote controller and pry it open.

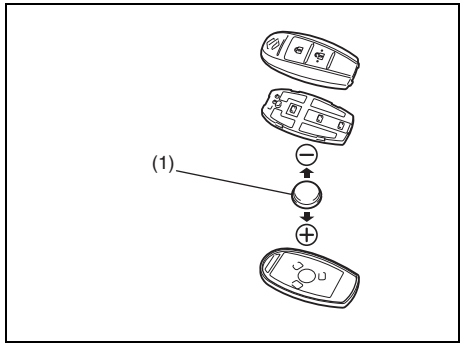

68LM210

(1) Lithium disc type battery:
CR2032 or equivalent

3) Replace the battery (1) so its + terminal faces the bottom of the case as shown in the illustration.
4) Close the remote controller firmly.
5) Check that the door locks can be operated with the remote controller.
6) Dispose of the used battery properly according to applicable rules or regulations. Do not dispose of lithium batteries with ordinary household trash.

⚠ WARNING

Swallowing a lithium battery may cause serious internal injury. Do not allow anyone to swallow a lithium battery. Keep lithium batteries away from children and pets. If swallowed, contact a physician immediately.

NOTICE

The remote controller is a sensitive electronic instrument. To avoid damaging it, do not expose it to dust or moisture or tamper with internal parts.

NOTE:
Used batteries must be disposed of properly according to applicable rules or regulations and must not be disposed of with ordinary household trash.

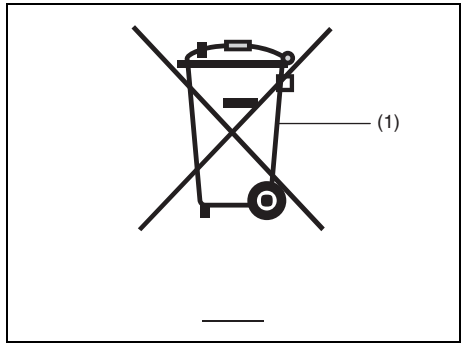

80JM133

(1) Crossed-out wheeled bin symbol

The crossed-out wheeled bin symbol (1) indicates that a used battery should be collected separately from ordinary household trash.

By ensuring the used battery is disposed of or recycled correctly, you will help prevent potential negative consequences for the environment and human health, which could otherwise be caused by inappropriate battery disposal. The recycling of materials will help to conserve natural resources. For more detailed information about disposing of or recycling the used battery, consult your SUZUKI dealer.

Type A
The keyless push start system, controller model S79M0 and key model R64M0 are in compliance with the essential requirements and other provisions of Directive 1999/5/EC.

Keyless entry system transmitter (Type B)

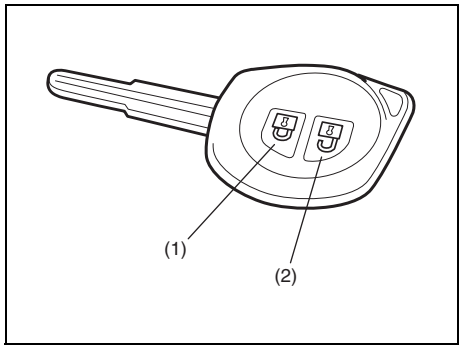

81A184

(1) LOCK button
(2) UNLOCK button

There are two ways to lock or unlock all doors (including the tailgate) simultaneously by operating the transmitter near the vehicle.

Central door locking system
- To lock all doors, push LOCK button (1) once.
- To unlock only the driver's door, push UNLOCK button (2) once.
- To unlock other doors, push UNLOCK button (2) once again.

NOTE:
You can switch the function that unlocks all doors from requiring two pushes to requiring one push, and vice versa, via the information display setting mode. For details on how to use the information display, refer to "Information display" in this section.

Central door locking system with the dead lock system (if equipped)
If you want to prevent tamper-unlocking of the door locks, use this method. When the dead lock system is activated, operating the lock knobs will not unlock the side doors.

To activate this system:
To lock all doors, push LOCK button (1) twice within 3 seconds.

To release this system:
- To unlock only the driver's door, push UNLOCK button (2) once.
- To unlock other doors, push UNLOCK button (2) once again.

NOTE:
You can switch the function that unlocks all doors from requiring two pushes to requiring one push, and vice versa, via the information display setting mode. For details on how to use the information display, refer to "Information display" in this section.

⚠ WARNING

Do not activate the dead lock system if there are occupants in the vehicle. They will be locked in the vehicle and cannot unlock the doors from inside.

The turn signal lights will flash once when the doors are locked and then the turn signal lights will flash once again when the doors are locked with the dead lock system.

When the doors are unlocked:
- The turn signal lights will flash twice.
- If the interior light switch is in DOOR position, the interior light will turn on for about 15 seconds and then fade out. If you insert the key into the ignition switch during this time, the light will start to fade out immediately.

Check that the doors are locked after you operate LOCK button (1).

NOTE:
If no door is opened within about 30 seconds after UNLOCK button (2) is operated, the doors will automatically lock again.

NOTE:
- *The maximum operating distance of the keyless entry system transmitter is about 5 m (16 ft.), but this can vary depending on the surroundings, especially near other transmitting devices such as radio towers or CB (Citizen's Band) radios.*
- *The door locks cannot be operated with the transmitter, if the ignition key is inserted in the ignition switch.*
- *When any door is open, the door locks can only be unlocked with the transmitter, and the turn signal light will not flash.*
- *If you lose one of the transmitters, ask your SUZUKI dealer as soon as possible for a replacement. Have your dealer program the new transmitter code in your vehicle's memory so that the old code is erased.*

NOTICE

The transmitter is a sensitive electronic instrument. To avoid damaging the transmitter:
- **Do not expose it to impacts, moisture or high temperature such as by leaving it on the dashboard under direct sunlight.**
- **Keep the transmitter away from magnetic objects such as a television.**

Battery replacement
If the transmitter becomes unreliable, replace the battery.

To replace the battery of the transmitter:

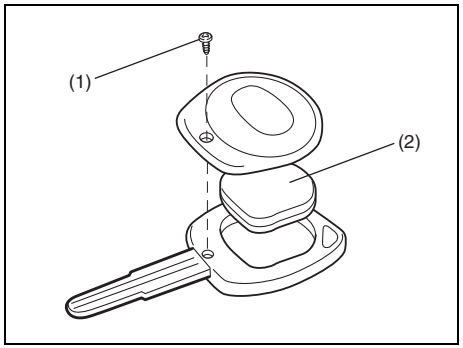

68LM248

1) Remove the screw (1), and open the transmitter cover.
2) Remove the transmitter (2).

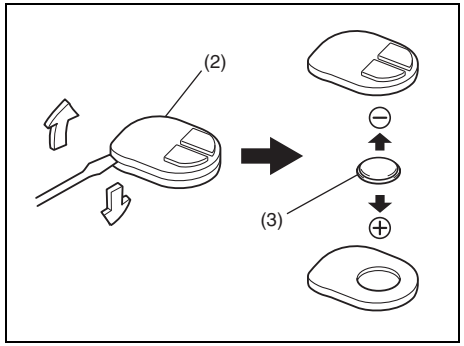

68LM249

(3) Lithium disc type battery:
CR1616 or equivalent

3) Put the edge of a flat-bladed screwdriver in the slot of the transmitter (2) and pry it open.
4) Replace the battery (3) so its + terminal faces "**+**" mark of the transmitter.
5) Close the transmitter and install it into the transmitter holder.
6) Close the transmitter cover, install and tighten the screw (1).
7) Check that the door locks can be operated with the transmitter.
8) Dispose of the used battery properly according to applicable rules or regulations. Do not dispose of lithium batteries with ordinary household trash.

⚠ WARNING

Swallowing a lithium battery may cause serious internal injury. Do not allow anyone to swallow a lithium battery. Keep lithium batteries away from children and pets. If swallowed, contact a physician immediately.

NOTICE

The transmitter is a sensitive electronic instrument. To avoid damaging it, do not expose it to dust or moisture or tamper with internal parts.

NOTE:
Used batteries must be disposed of properly according to applicable rules or regulations and must not be disposed of with ordinary household trash.

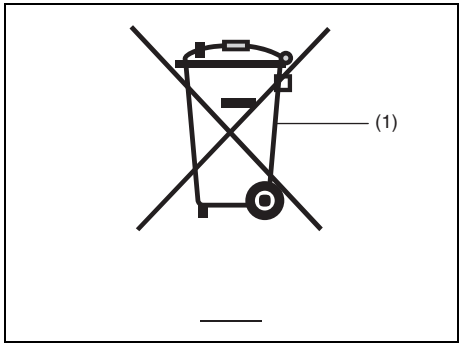

80JM133

(1) Crossed-out wheeled bin symbol

The crossed-out wheeled bin symbol (1) indicates that a used battery should be collected separately from ordinary household trash.

By ensuring the used battery is disposed of or recycled correctly, you will help prevent potential negative consequences for the environment and human health, which could otherwise be caused by inappropriate battery disposal. The recycling of materials will help to conserve natural resources. For more detailed information about disposing of or recycling of the used battery, consult your SUZUKI dealer.

Type B
The keyless entry system, transmitter model T68L0 and controller model S54P0 are in compliance with the essential requirements and other provisions of Directive 1999/5/EC.

Theft deterrent light (if equipped)

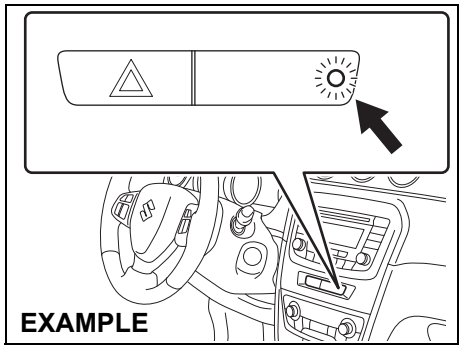

54P000211

This light will blink with the ignition switch in “LOCK” or “ACC” position, or the ignition mode “LOCK” (OFF) or “ACC”. The blinking light is intended to deter theft by leading others to believe that the vehicle is equipped with a security system.

NOTE:
For the theft deterrent alarm system of European countries, Mexico and South Africa models, refer to “For European countries, Mexico and South Africa” in “SUPPLEMENT” section.

Windows

Manual window control (if equipped)

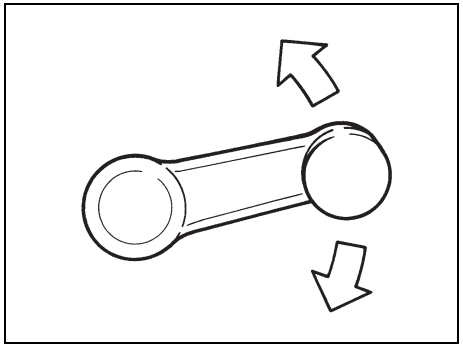

60G010A

Raise or lower the door windows by turning the handle located on the door panel.

Electric window controls (if equipped)

The electric windows can only be operated when the ignition switch is in “ON” position or the ignition mode is “ON”.

Driver’s side (Type A)

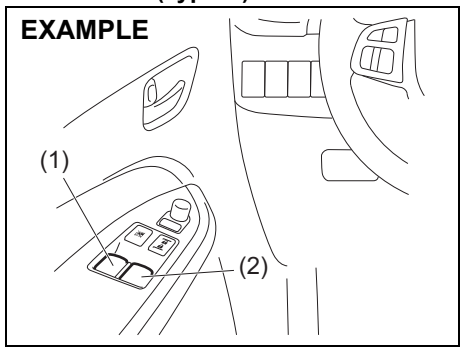

54P000252

Driver’s side (Type B)

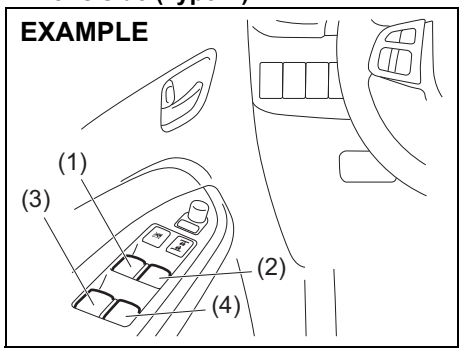

54P000212

The driver’s door has a switch (1) to operate the driver’s window, and a switch (2) to operate the front passenger’s window or there are switches (3), (4), to operate the rear left and right passenger windows, respectively.

Passenger’s door

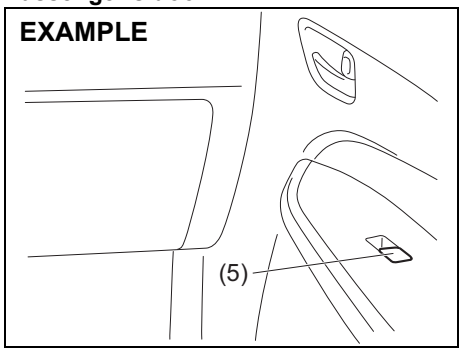

54P000213

The passenger’s door has a switch (5) to operate the passenger’s window.

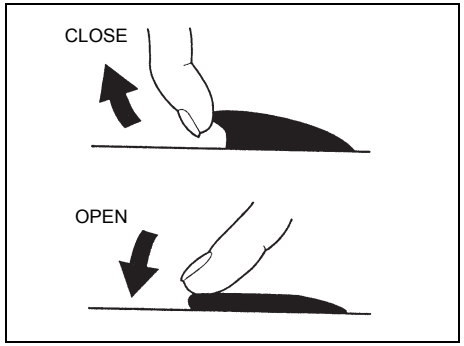

81A009

To open a window, push the top part of the switch. To close the window, lift up the top part of the switch.

The driver's window has AUTO-DOWN and AUTO-UP features for greater convenience (at toll booths or drive-through restaurants, for example). This means the driver can open or close the window without holding the window switch in DOWN or UP position. Press down or lift up the driver's window switch completely and release it. To stop the window before it reaches the FULL-DOWN or FULL-UP position, pull up or push down the switch briefly.

Lock switch (type A)

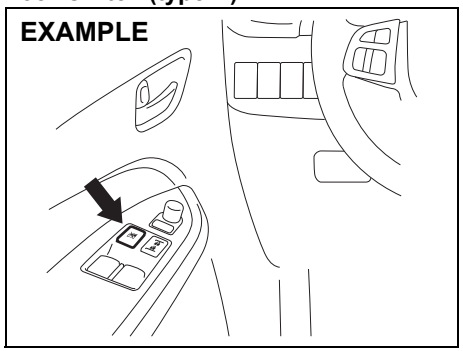

54P000253

Lock switch (type B)

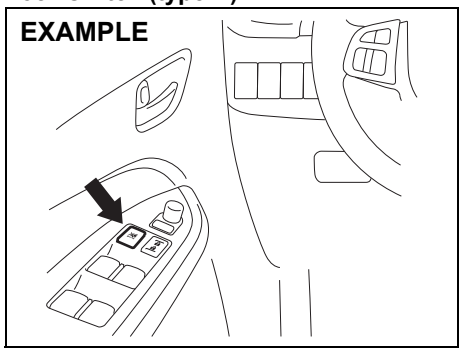

54P000214

The driver's door also has a lock switch for the passenger's window(s). When you push in the lock switch, the passenger's window(s) cannot be raised or lowered by operating any of the switches (2), (3), (4) or (5). To restore normal operation, release the lock switch by pushing it again.

⚠ WARNING

- **You should always lock the passenger's window operation when there are children in the vehicle. Children can be seriously injured if they get part of their body caught by the window during operation.**
- **To avoid injuring an occupant by window entrapment, check that no part of the occupant's body such as hands or head is in the path of the electric windows when closing them.**
- **Always remove the ignition key or take the keyless push start system remote controller with you when leaving the vehicle even only for a short time. Also do not leave children alone in a parked vehicle. Unattended children could use the electric window switches and get trapped by the window.**

NOTE:
If you drive with one of the rear windows open, you may hear a loud sound caused by air vibration. To reduce the sound, open the driver's or front passenger's window, or narrow the rear window opening.

Pinching prevention function

The driver's window is equipped with a pinching prevention function. This function detects a foreign object that is caught in the window as it is being closed by AUTO-UP feature, which allows you to close the window without holding the window switch in UP position, and stops the window from closing to prevent damage.

⚠ WARNING

To avoid injuring an occupant by window entrapment, check that no part of the occupant's body such as hands or head is in the path of the electric window when closing it.
This function may not detect an object due to the size, hardness, or position of the object being caught in the closing window.

⚠ CAUTION

- **The pinching prevention function does not operate while you are holding the window switch in UP position.**
- **The pinching prevention function may not detect an object caught in the window just before the window is fully closed.**

NOTE:
Even if you cannot close the window by the AUTO-UP feature because there may be something wrong with the pinching prevention function, you can close the window by holding the window switch in UP position.
If you drive in extreme off-road condition, the pinching prevention function may operate accidentally because the window reacts to vehicle jolting.

Pinching prevention function initialization
When you disconnect and reconnect the battery or replace the fuse, the function will be deactivated. In this condition, the AUTO-DOWN feature will be deactivated, while the AUTO-UP feature may remain activated. The pinching prevention function needs to be initialized.

To initialize the pinching prevention function, use the following procedure:
1) Turn the ignition switch to "ON" position or press the engine switch to change the ignition mode to "ON".
2) Open the driver's window fully by holding the window switch in DOWN position.
3) Close the driver's window by holding the switch in UP position, and keep holding the switch for 2 seconds after the window is fully closed.
4) Check the driver's window to see if the AUTO-DOWN/UP feature works.

⚠ WARNING

Whenever you disconnect and reconnect the battery or replace the fuse, the pinching prevention function needs to be initialized.
The pinching prevention function will not be activated until the initialization is completed.

If the AUTO-DOWN/UP feature will not work after initialization, there might be something wrong with the pinching prevention function. Have your vehicle inspected by an authorized SUZUKI dealer.

Mirrors

Inside rearview mirror

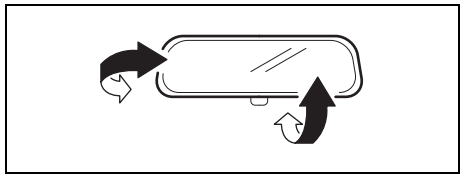

68LMT0205

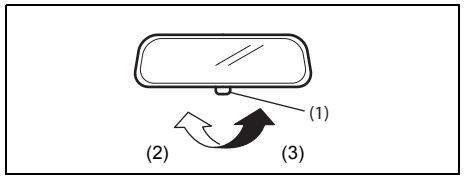

68LMT0206

(2) Day driving
(3) Night driving

You can adjust the inside rearview mirror by hand to see the rear of your vehicle in the mirror. To adjust the mirror, set the selector tab (1) to the day position, and then move the mirror up, down or sideways by hand to obtain the best view.

When driving at night, you can move the selector tab to the night position to reduce glare from the headlights of vehicles behind you.

⚠ WARNING

- **Always adjust the mirror with the selector set to the day position.**
- **Only use the night position if it is necessary to reduce glare from the headlights of vehicles behind you. Be aware that in this position you may not be able to see some objects that could be seen in the day position.**

Outside rearview mirrors

Adjust the outside rearview mirrors so you can just see the side of your vehicle in the mirrors.

⚠ WARNING

Be careful when judging the size or distance of a vehicle or other object seen in the side convex mirror. Be aware that objects look smaller and appear farther away than when seen in a flat mirror.

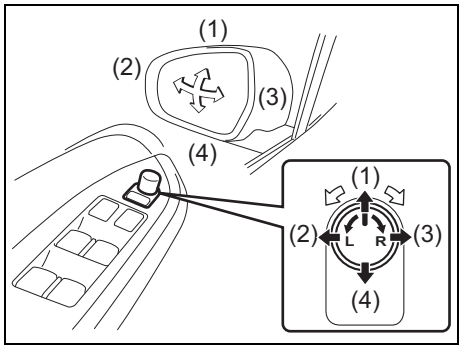

54P000215

The switch to control the electric mirrors is located on the driver's door panel. You can adjust the mirrors when the ignition switch is in "ACC" or "ON" position, or the ignition mode is "ACC" or "ON". To adjust the mirrors:

1) Move the selector switch to the left or right to select the mirror you wish to adjust.
2) Press the outer part of the switch that corresponds to the direction in which you wish to move the mirror.
3) Return the selector switch to the center position to help prevent unintended adjustment.

NOTE:
If your vehicle is equipped with the heated outside rearview mirrors, refer to "Heated rear window switch / heated outside rearview mirror switch (if equipped)" in this section.

Outside rearview mirror folding switch (if equipped)

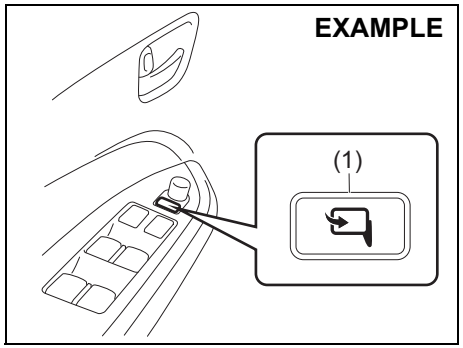

54P000216

You can fold the mirrors when you park the vehicle in a narrow space. When the ignition switch is in "ACC" or "ON" position, or the ignition mode is "ACC" or "ON", push the folding switch (1) to fold and unfold the mirrors. Check that the mirrors are completely unfolded before you start driving.

⚠ CAUTION

Moving mirrors can pinch and injure a hand. Do not allow anyone's hand to get near the mirrors when folding and unfolding the mirrors.

Front seats

Seat adjustment

⚠ WARNING

Never attempt to adjust the driver's seat or seatback while driving. The seat or seatback could move unexpectedly, causing loss of control. Check that the driver's seat and seatback are properly adjusted before you start driving.

⚠ WARNING

To avoid excessive seat belt slack, which reduces the effectiveness of the seat belts as a safety device, check that the seats are adjusted before the seat belts are fastened.

⚠ WARNING

All seatbacks should always be in an upright position when driving, or seat belt effectiveness may be reduced. Seat belts are designed to offer maximum protection when seatbacks are in the upright position.

EXAMPLE

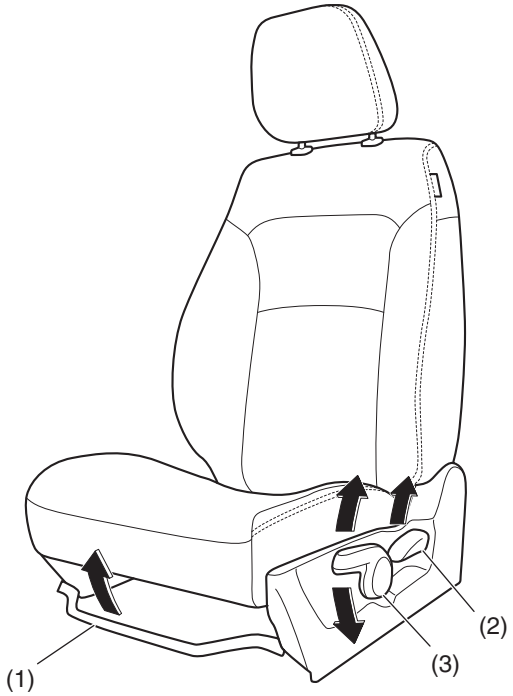

61MM0A005

Seat position adjustment lever (1)
Pull the lever up and slide the seat.

Seatback angle adjustment lever (2)
Pull the lever up and move the seatback.

Seat height adjustment lever (3) (if equipped)
Pull the lever up to raise the seat. Push the lever down to lower the seat.

After adjustment, move the seat and seatback forward and backward to check that it is securely latched.

Head restraints

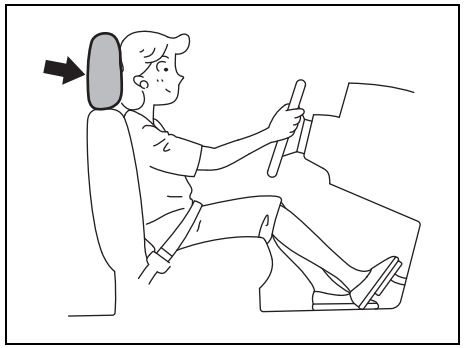

80J001

Head restraints are designed to help reduce the risk of neck injuries in the case of an accident. Adjust the head restraint to the position which places the center of the head restraint closest to the top of your ears. If this is not possible for very tall passengers, adjust the head restraint as high as possible.

⚠ WARNING

- **Never drive the vehicle with the head restraints removed.**
- **Do not attempt to adjust the head restraint while driving.**

NOTE:
It may be necessary to recline the seatback to provide enough overhead clearance to remove the head restraint.

Front

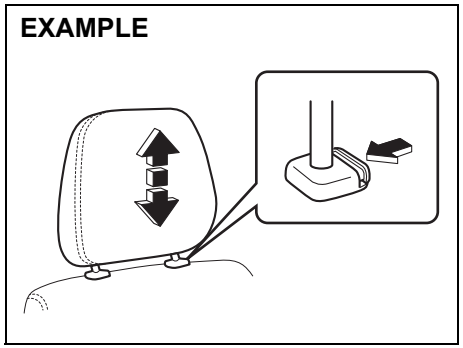

61MM0A032

To raise the front head restraint, pull upward the restraint until it clicks. To lower the restraint, push down the restraint while holding in the lock lever. If a head restraint must be removed (for cleaning, replacement, etc.), push in the lock lever and pull the head restraint all the way out.

Front seat heater (if equipped)

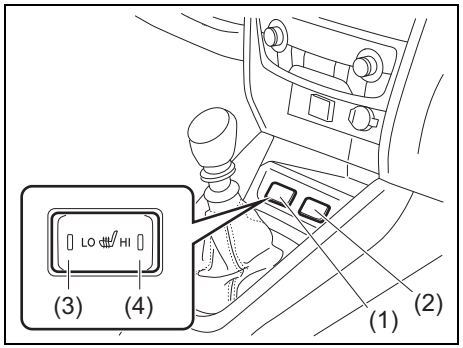

54P000217

(1) Left seat heater switch
(2) Right seat heater switch
(3) “LO” side
(4) “HI” side

When the ignition switch is in “ON” position or the ignition mode is “ON”, push one or both of the seat heater switch(es) to warm the corresponding seat(s).

- When a seat heater switch is pushed, the heater inside the corresponding seat operates.

- To select the low heat range, push “LO” side (3) of the switch. The low side indicator light will illuminate when the heater is on.
- To select the high heat range, push “HI” side (4) of the switch. The high side indicator light will illuminate when the heater is on.
- To turn off the heater, return the switch to the level position. Check that the indicator light goes off.

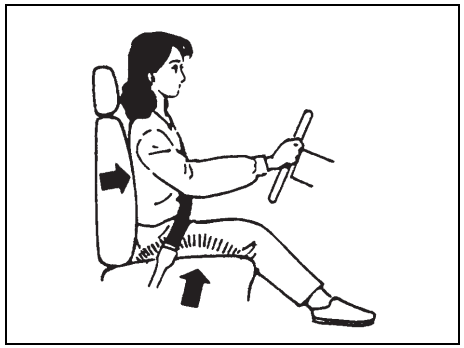

86G064

⚠ WARNING

Improperly using the seat heater can be hazardous. An occupant can suffer burns even if the heating temperature is fairly low, if the occupant wears thin pants, a thin skirt or shorts and leaves the heater on for long periods.
Avoid using the seat heater for these occupants:
- **People who have reduced feeling in their legs, including the elderly or those with certain disabilities.**
- **Small children or anyone with sensitive skin.**
- **People who are asleep or under the influence of alcohol or other drugs which make them tired.**

NOTICE

To avoid damaging the heater element:
- **Do not subject the front seats to heavy impacts, such as children jumping on them.**
- **Do not cover the seat with any insulating materials such as blankets or cushions.**

Rear seats

Seat adjustment

⚠ WARNING

To avoid excessive seat belt slack, which reduces the effectiveness of the seat belts as a safety device, check that the seats are adjusted before the seat belts are fastened.

⚠ WARNING

All seatbacks should always be in an upright position when driving, or seat belt effectiveness may be reduced. Seat belts are designed to offer maximum protection when seatbacks are in the upright position.

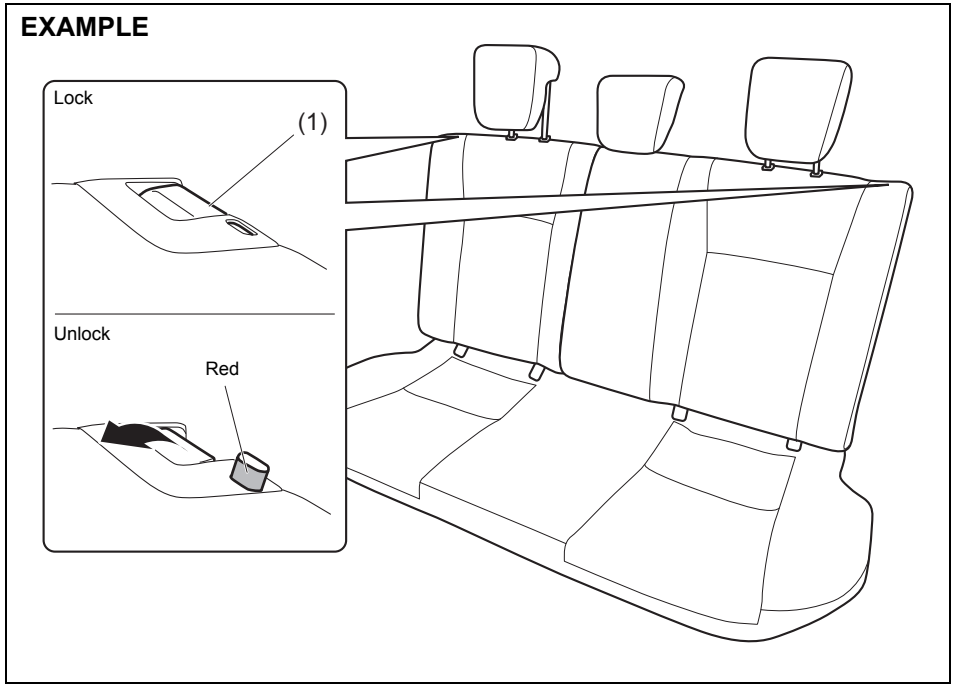

54P000218

Seatback angle adjustment lever (1) (if equipped)
Pull the lever up and move the seatback.

After adjustment, move the seatback forward and backward to check that it is securely latched.

⚠ CAUTION

After securing the rear seatback, check that it is locked securely. If it is not, red button will appear beside the lever.

Head restraints

Head restraints are designed to help reduce the risk of neck injuries in the case of an accident.

⚠ WARNING

- **Never drive the vehicle with the head restraints removed.**
- **Do not attempt to adjust the head restraint while driving.**

NOTE:
It may be necessary to fold forward the seatback to provide enough overhead clearance to remove the head restraint.

Adjust the head restraint to the position which places the center of the head restraint closest to the top of your ears. If this is not possible for very tall passengers, adjust the head restraint as high as possible.

Rear

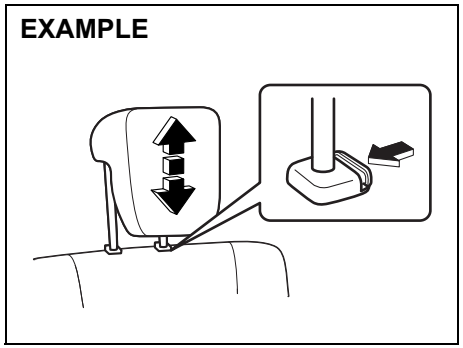

61MM0A033

To raise the rear head restraint, pull upward the restraint until it clicks. To lower the restraint, push down the restraint while holding in the lock lever. If a head restraint must be removed (for cleaning, replacement, etc.), push in the lock lever and pull the head restraint all the way out.

When installing a child restraint system, remove the head restraint.

Folding rear seats

The rear seats of your vehicle can be folded forward to provide additional cargo space.

To fold the rear seats forward:

1) Lower the head restraint fully.
2) Hook the webbing of rear seat belts on the belt guide. For details on rear outside seat belt guide, refer to “Rear outside seat belt guide” in this section.
3) Stow the rear center lap-shoulder belt. Refer to “Lap-shoulder belt with detachable connector” in this section.

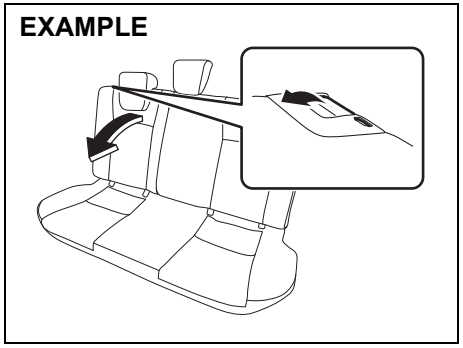

54P000219

4) Pull the release lever on the top of each split seat, and fold the seatbacks forward.

NOTICE

After folding the rear seatback forward, do not allow any foreign material to enter the lock opening. This may cause damage to the inside of the lock and prevent the seatback from being locked securely.

⚠ WARNING

If you need to carry cargo in the passenger compartment with the rear seatback folded forward, secure the cargo or it may be thrown about, causing injury. Never pile cargo higher than the seatbacks.

To return the seat to the normal position, follow the procedure below.

⚠ CAUTION

When returning the rear seatback to the normal position, be careful that your finger is not caught between the lock and the striker.

NOTICE

When returning the rear seatback to the normal position, check that there is nothing around the striker. Any foreign materials prevent the seatback from being locked securely.

EXAMPLE

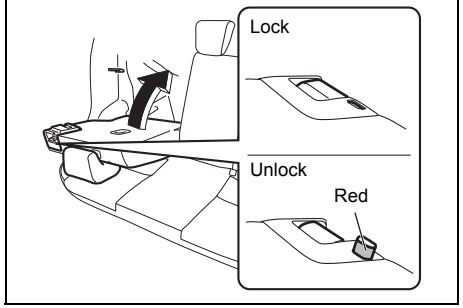

54P000220

Raise the seatback until it locks into place.

After returning the seat, move the seatback forward and backward to check that it is securely latched.

⚠ CAUTION

Do not put your hand into the rear seatback lock opening, or your finger may get caught and be injured.

⚠ CAUTION

After securing the rear seatback, check that it is locked securely. If it is not, red button will appear beside the release lever.

NOTICE

- **When returning the rear seatback to the normal position, do not allow any foreign material to enter the lock opening. This may prevent the seatback from being locked securely.**
- **When returning the rear seatback to the normal position, handle it carefully by hand to avoid any damage to the lock itself. Do not push it by using some material or by applying excessive force.**
- **As the lock is designed exclusively for securing the rear seatback, do not use it for any other purpose. Incorrect use of it may cause damage to the inside of the lock and prevent the seatback from being locked securely.**

Seat belts and child restraint systems

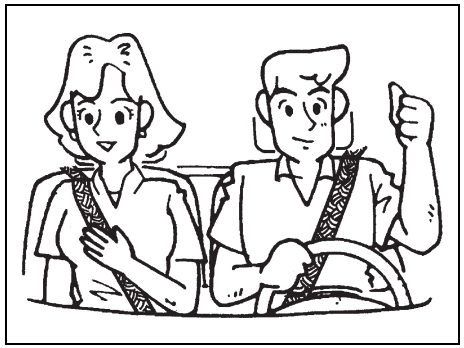

65D231S

⚠ WARNING

Wear your seat belts at all times.

⚠ WARNING

An air bag supplements or adds to the frontal crash protection offered by seat belts. The driver and all passengers must be properly restrained by fastening seat belts at all times, whether or not an air bag is mounted at their seating position, to minimize the risk of severe injury or death in the event of a crash.

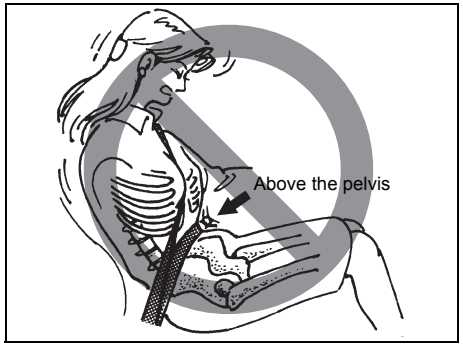

65D606

⚠ WARNING

- **Never allow persons to ride in the cargo area of a vehicle. In the event of an accident, there is a much greater risk of injury for persons who are not riding in a seat with their seat belt securely fastened.**
- **Seat belts should always be adjusted as follows:**
  - **the lap portion of the belt should be worn low across the pelvis, not across the waist.**
  - **the shoulder straps should be worn on the outside shoulder only, and never under the arm.**
  - **the shoulder straps should be away from your face and neck, but not falling off your shoulder.**

(Continued)

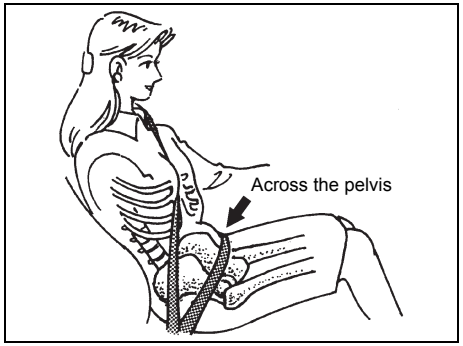

65D201

⚠ WARNING

(Continued)

- **Seat belts should never be worn with the straps twisted and should be adjusted as tightly as is comfortable to provide the protection for which they have been designed. A slack belt will provide less protection than a snug belt.**
- **Check that each seat belt buckle is inserted into the proper buckle catch. It is possible to cross the buckles in the rear seat.**

(Continued)

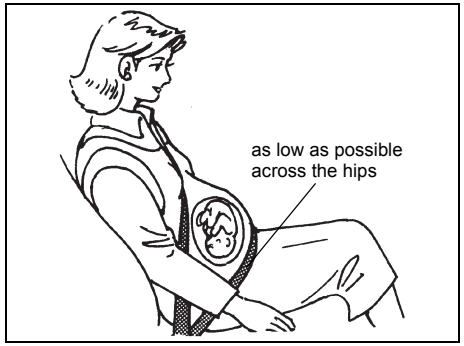

65D199

⚠ WARNING

(Continued)

- **Pregnant women should use seat belts, although specific recommendations about driving should be made by the woman's medical advisor. Remember that the lap portion of the belt should be worn as low as possible across the hips, as shown in the illustration.**
- **Do not fasten your seat belt over hard or breakable objects in your pockets or on your clothing. If an accident occurs, objects such as glasses, pens, etc. under the seat belt can cause injury.**

(Continued)

⚠ WARNING

(Continued)

- **Never use the same seat belt for more than one occupant and never attach a seat belt over an infant or child being held on an occupant's lap. Such seat belt use could cause serious injury in the event of an accident.**
- **Periodically inspect seat belt assemblies for excessive wear and damage. Seat belts should be replaced if webbing becomes frayed, contaminated or damaged in any way. It is essential to replace the entire seat belt assembly after it has been worn in a severe impact, even if damage to the assembly is not obvious.**
- **Children aged 12 and under should ride properly restrained in the rear seat.**
- **Infants and small children should never be transported unless they are properly restrained. Restraint systems for infants and small children can be purchased locally and should be used. Check that the system you purchase meets applicable safety standards. Read and follow all the directions provided by the manufacturer.**

(Continued)

⚠ WARNING

(Continued)

- **For children, if the shoulder belt irritates the neck or face, move the child closer to the center of the vehicle.**
- **Avoid contamination of seat belt webbing by polishes, oils, chemicals, and particularly battery acid. Cleaning may safely be carried out using mild soap and water.**
- **Do not insert any items such as coins and clips into the seat belt buckles, and be careful not to spill liquids into these parts. If foreign materials get into a seat belt buckle, the seat belt may not work properly.**
- **All seatbacks should always be in an upright position when driving, or seat belt effectiveness may be reduced. Seat belts are designed to offer maximum protection when seatbacks are in the upright position.**

Lap-shoulder belt

Emergency locking retractor (ELR)
The seat belt has an emergency locking retractor (ELR), which is designed to lock the seat belt only during a sudden stop or impact. It also may lock if you pull the belt across your body very quickly. If this happens, let the belt go back to unlock it, and then pull the belt across your body more slowly.

Rear outside seat belt guide

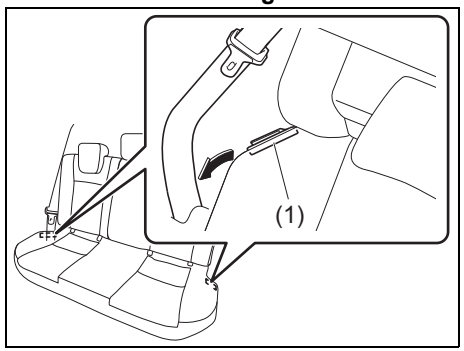

54P000260

⚠ WARNING

If rear outside seat belt is fastened without unhooking the webbing from the belt guide (1), the seat belt does not show full performance in the event of accident and can result in serious personal injury.
Unhook the webbing from the belt guide whenever the seat belt is fastened.

Safety reminder

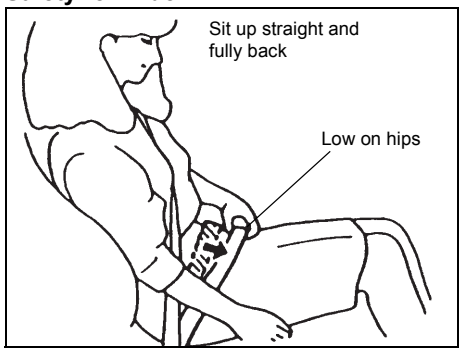

60A038

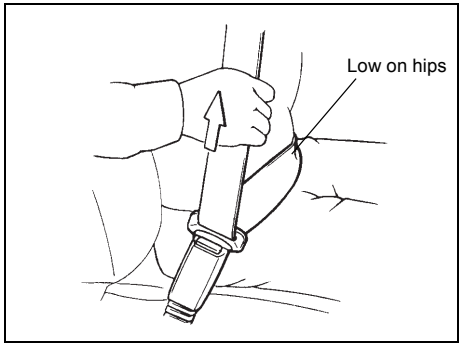

60A040

To reduce the risk of sliding under the belt during a crash, position the lap portion of the belt across your lap as low on your hips as possible and adjust it to a snug fit by pulling the shoulder portion of the belt upward through the latch plate. The length of the diagonal shoulder strap adjusts itself to allow freedom of movement.

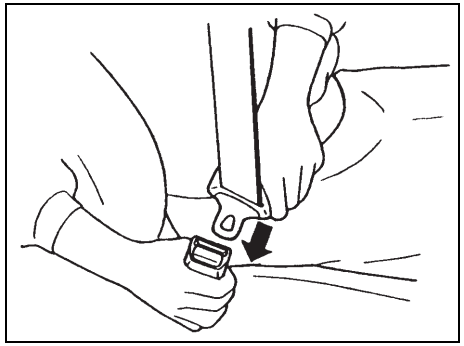

60A036

To fasten the seat belt, sit up straight and far back into the seat, pull the latch plate attached to the seat belt across your body and press it straight into the buckle until you hear a click.

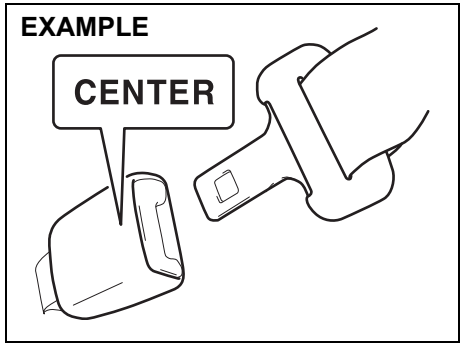

80J2008

NOTE:
The word "CENTER" is marked on the buckle for the rear center belt. The buckles are designed so a latch plate cannot be inserted into the wrong buckle.

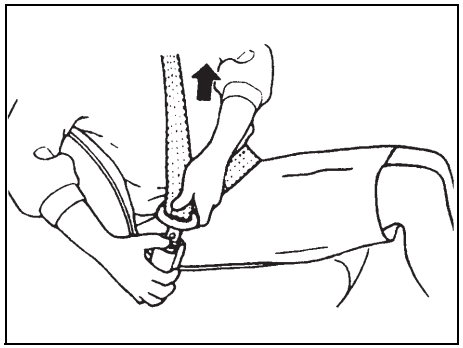

60A039

To unfasten the seat belt, push the red "PRESS" button on the buckle and retract the belt slowly while holding the belt or/and the latch plate.

Lap-shoulder belt with detachable connector

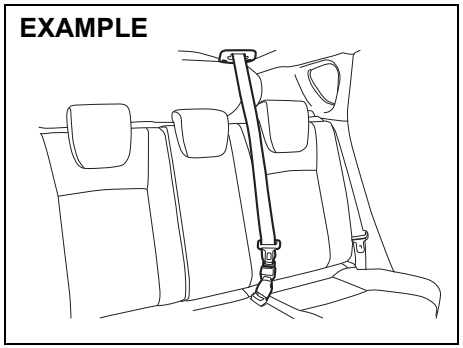

54P000221

The rear center lap-shoulder belt has a buckle, a latch plate and a detachable connector. The buckle is marked as "CENTER" for distinction from the rear left seat belt buckle. The rear center seat belt buckle and the connector are designed so as not to allow a wrong latch plate to be inserted.

When the rear seatback is in the upright position, keep the detachable connector latched. Only when the rear seatback is folded down, unlatch the detachable connector. To latch and unlatch the connector, refer to "Unlatching and latching detachable connector" in this section.

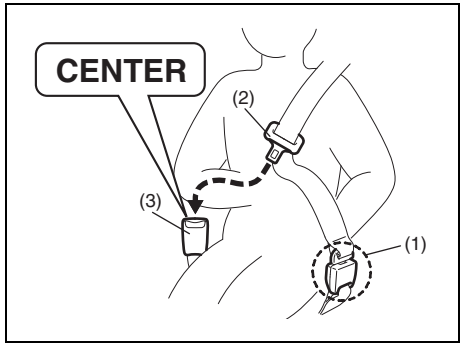

61MM0A060

Fastening
Before fastening the rear center lap-shoulder belt, check that the detachable connector (1) is securely latched and the webbing is not twisted.

To fasten the belt, sit up straight and far back into the seat, pull the latch plate (2) across your body and press it straight into the buckle (3) until you hear a click.

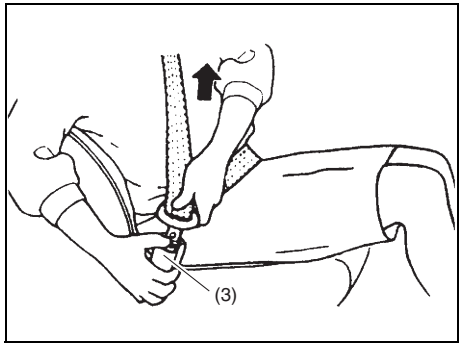

61MM0A094

Unfastening
To unfasten the seat belt, push the button on the buckle (3) and retract the belt slowly while attaching a hand to the belt or/and the latch plate.

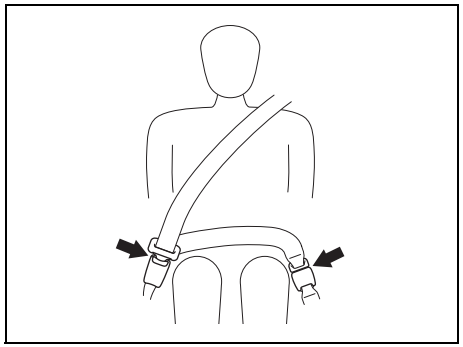

61MM0A061

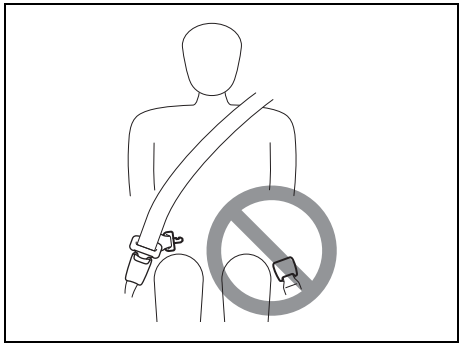

61MM0A062

⚠ WARNING

To minimize risk of severe injury or death in the event of a crash, always fasten seat belt with both latches buckled.

Unlatching and latching detachable connector

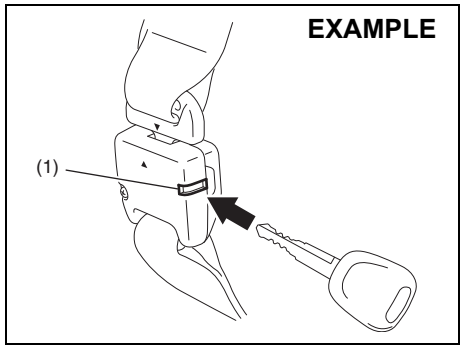

61MM0A063

Unlatching
To unlatch the connector:
1) Insert a key or a latch plate into the slot (1) on the connector and allow the belt to retract.
2) Once the belt has completely retracted, stow the belt in the holder. Refer to "Stowing rear center lap-shoulder belt" for details in this section.

NOTICE

When the rear seatback is folded forward, unlatch the connector of rear center lap-shoulder belt. Otherwise, the seat belt webbing can be damaged.

Latching
To latch the connector:
1) Pull the belt out from the holder.

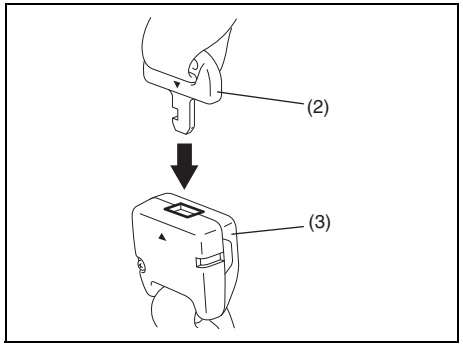

61MM0A064

2) Insert the connector latch plate (2) into the connector (3) to align the triangle marks until you hear a click.

⚠ WARNING

Check that the detachable connector is securely latched and the webbing is not twisted.

Stowing rear center lap-shoulder belt
Stow the belt after it is retracted completely.

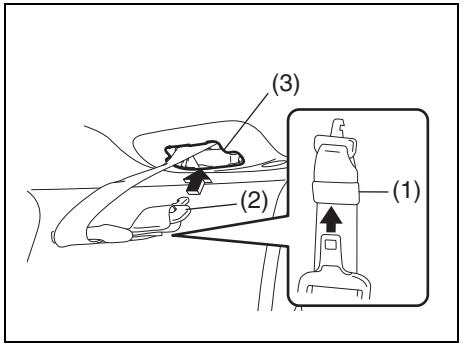

61MM0A065

To stow the belt, insert the latch plate into the slit (1). Then insert the connector latch plate (2) into the roof holder slot (3).

NOTE:
For Australia:
For additional information, refer to "SUPPLEMENT" section in the end of this book.

Seat belt reminder

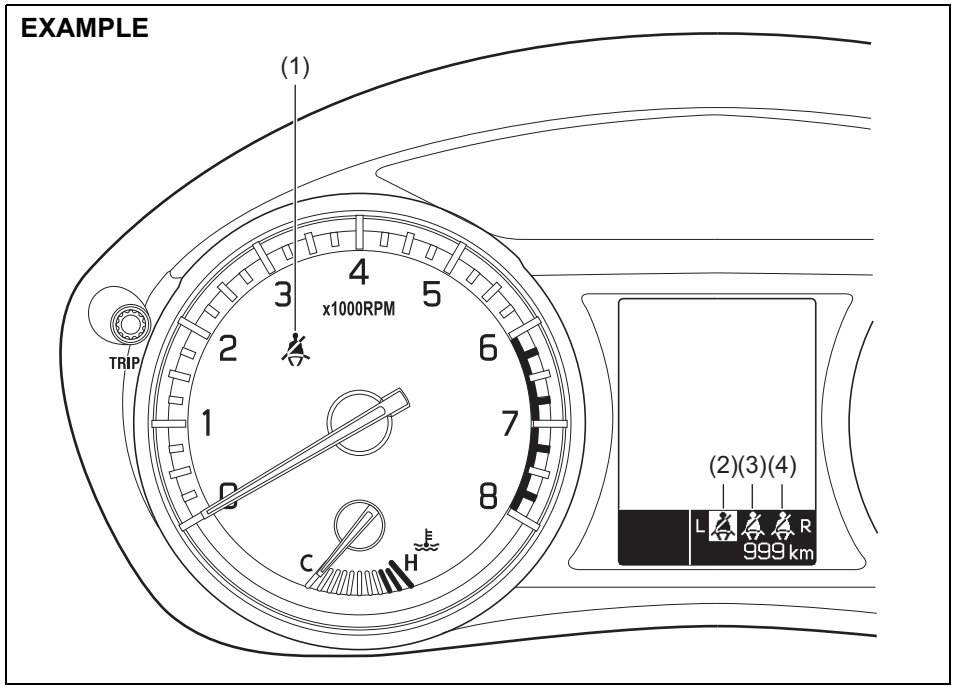

54P000222

(1) Driver's seat belt reminder light / front passenger's seat belt reminder light (if equipped)
(2) Rear passenger's seat belt reminder light (rear left)*1 (if equipped)
(3) Rear passenger's seat belt reminder light (rear center)*2 (if equipped)
(4) Rear passenger's seat belt reminder light (rear right)*2 (if equipped)

*1 This symbol represents that the seat belt is unfastened.
*2 This symbol represents that the seat belt is fastened.

When the driver and/or passenger(s) do not fasten their seat belts, the seat belt reminder lights will come on and a buzzer will sound to remind the driver and/or passenger(s) to fasten their seat belts. For more details, refer to the explanation below.

⚠ WARNING

It is absolutely essential that the driver and passengers fasten their seat belts at all times. Persons who are not fastening seat belts have a much greater risk of injury if an accident occurs. Make a regular habit of buckling your seat belt before putting the key in the ignition or pressing the engine switch.

Driver's seat belt reminder
If the driver's seat belt remains unbuckled when the ignition switch is turned to "ON" position or the engine switch is pressed to change the ignition mode to "ON", the reminder works as follows:

1) The driver's seat belt reminder light will come on. The front passenger's seat belt reminder light (if equipped) will also come on if a front passenger does not fasten his/her seat belt.
2) After the vehicle's speed has reached about 15 km/h, the driver's seat belt reminder light will blink and a buzzer will sound for about 95 seconds.
3) The reminder light will remain on until the driver's seat belt is buckled.

If the driver has buckled his or her seat belt and later unbuckles the seat belt, the reminder system will be activated from Step 1) or 2) according to the vehicle's speed. When the vehicle's speed is less than 15 km/h, the reminder will start from Step 1). When the vehicle's speed is more than 15 km/h, the reminder will start from Step 2).
The reminder will be automatically canceled when the driver's seat belt is buckled or the ignition switch is turned off, or the engine switch is pressed to change the ignition mode to "LOCK" (OFF).

Front passenger's seat belt reminder (if equipped)
The front passenger's seat belt reminder will activate only when there is a passenger sitting in the front seat. In some situations, however, such as when you place heavy objects in the front seat, the seat belt reminder can be activated as if a passenger was present. The front passenger's seat belt reminder works in the same manner as the driver's seat belt reminder.

Rear passenger's seat belt reminder (if equipped)
If a rear seat belt is not fastened when the engine is started, all the rear passenger's seat belt reminder lights will come on for about 35 seconds and then go out. Within this 35 seconds, the corresponding reminder is highlighted. The reminder fades when the seat belt is fastened.

The rear passenger's seat belt reminder lights will also come on for about 35 seconds in the following conditions.

- If a seat belt is unfastened when the vehicle speed is less than 15 km/h, the corresponding light will be highlighted.
- If a seat belt is unfastened when the vehicle speed is more than 15 km/h, the corresponding light will be highlighted and a buzzer will sound.

The reminder will be automatically canceled when the rear seat belt is buckled or the ignition switch is turned off, or the engine switch is pressed to change the ignition mode to "LOCK" (OFF).

Shoulder anchor height adjuster

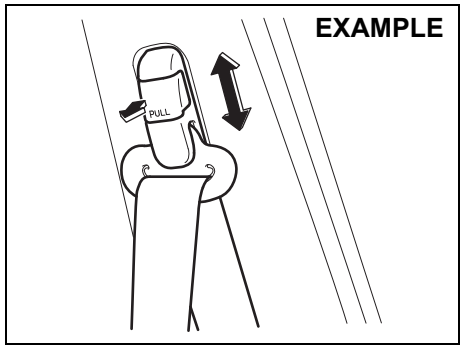

64J198

Adjust the shoulder anchor height so that the shoulder belt rides on the center of the outboard shoulder. To move upward, slide the anchor up. To move downward, slide the anchor down while pulling the lock knob out. After adjustment, check that the anchor is securely locked.

⚠ WARNING

Check that the shoulder belt is positioned on the center of the outside shoulder. The belt should be away from your face and neck, but not falling off your shoulder. Misadjustment of the belt could reduce the effectiveness of the seat belt in a crash.

Rear outside seat belt guide

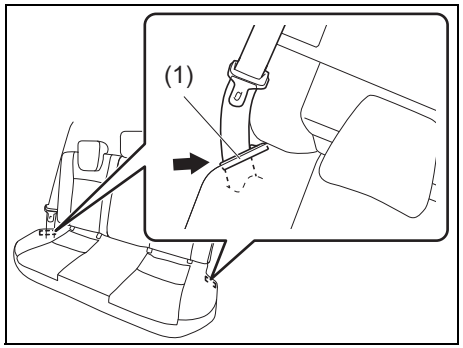

54P000261

Rear outside seat belt guides (1) are provided on the lateral face of rear seat as shown in the illustration.

When the rear seat belt is not fastened, hook the webbing on the belt guide.
When the rear seat belt is fastened, unhook the webbing from the belt guide.

⚠ WARNING

If rear outside seat belt is fastened without unhooking the webbing from the belt guide (1), the seat belt does not show full performance in the event of accident and can result in serious personal injury.
Unhook the webbing from the belt guide whenever the seat belt is fastened.

Seat belt inspection

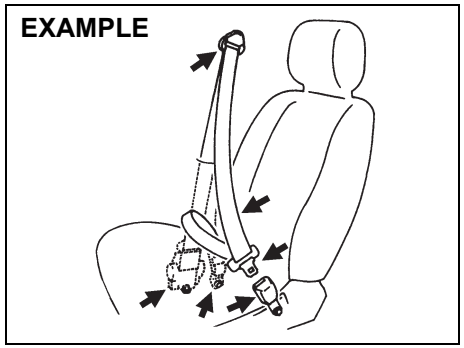

65D209S

Periodically check if the seat belts work properly and are not damaged. Check the webbing, buckles, latch plates, retractors, anchorages and guide loops. Replace any seat belts which do not work properly or are damaged.

⚠ WARNING

Inspect all seat belt assemblies after any crash. Any seat belt assembly which was in use during a crash (other than a very minor one) should be replaced, even if damage to the assembly is not obvious. Any seat belt assembly which was not in use during a crash should be replaced if it does not function properly, it is damaged in any way or the seat belt pretensioners were activated (that is, if the front air bags were activated).

Child restraint systems

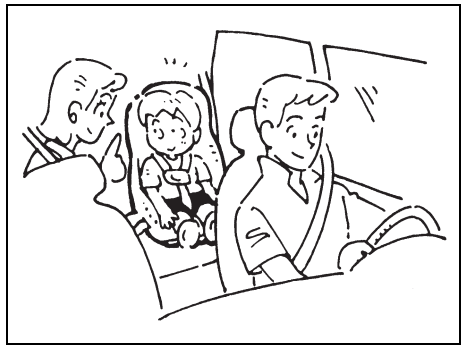

60G332S

Infant restraint - rear seat only

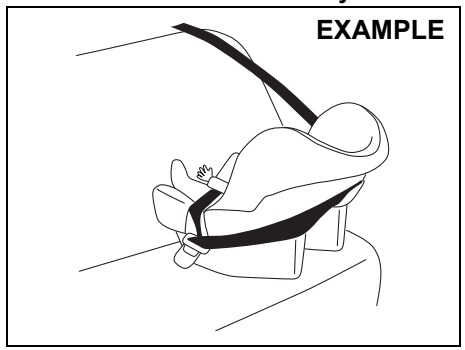

80JC007

Child restraint

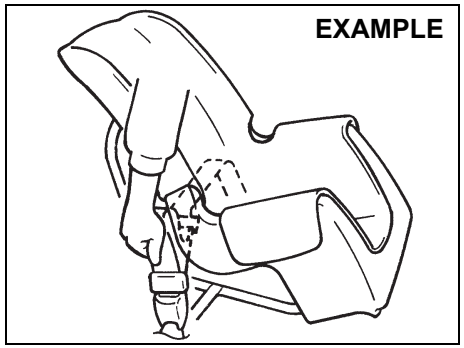

80JC016

Booster seat

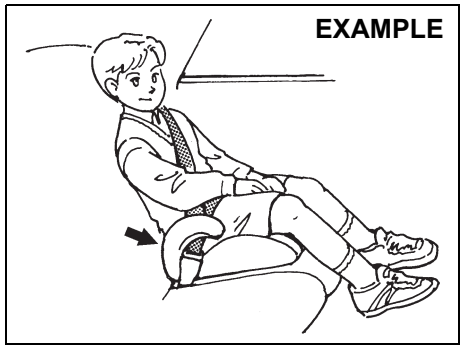

80JC008

SUZUKI highly recommends that you use a child restraint system to restrain infants and small children. Many different types of child restraint systems are available; check that the restraint system you select meets applicable safety standards.

All child restraint systems are designed to be secured in vehicle seats either by seat belts (lap belts or the lap portion of lap-shoulder belts) or by special rigid lower anchor bars built into the seat. Whenever possible, SUZUKI recommends that child restraint systems be installed on the rear seat. According to accident statistics, children are safer when properly restrained in rear seating positions than in front seating positions.

(For EU countries)
When purchasing a child restraint and install it to your SUZUKI vehicle, refer to the information about suitability for child restraints shown in “Child restraint system” in this section.

NOTE:
Observe any statutory regulation about child restraints.

58MS030

⚠ WARNING

(Vehicle without the front passenger air bag deactivation system)
Do not install a rear-facing child restraint in the front passenger’s seat. If the passenger’s front air bag inflates, a child in a rear-facing child restraint could be killed or severely injured. The back of a rear-facing child restraint would be too close to the inflating air bag.

⚠ WARNING

(Vehicle with the front passenger air bag deactivation system)
When using a child restraint system on the front passenger's seat, the front passenger's air bag system must be deactivated; otherwise deployment of the front passenger's air bag could result in the death or serious injury of the child.

⚠ WARNING

If you install a child restraint system in the rear seat, slide the front seat far enough forward so that the child's feet do not touch the front seatback. This will help avoid injury to the child in the event of an accident.

65D608

65D609

⚠ WARNING

Children could be endangered in a crash if their child restraint systems are not properly secured in the vehicle. When installing a child restraint system, follow the instructions below. Secure the child in the restraint system according to the manufacturer's instructions.

Child restraint system

Child restraint

The suitability of each passenger's seat position for carriage of children and fitting of child restraint system is shown in the table below. Whenever you carry children under 12 years of age or smaller than 150 cm, properly use the child restraints which conform to UN Vehicle Regulation No. 44, the standard for child restraints, referring to the table.

Installation suitability of child restraint systems

In case the front passenger airbag is activated.

Mass Group		Seating position (or other site)				
		Front Passenger	Rear Outboard	Rear Center	Intermediate Outboard	Intermediate Center
group 0	up to 10 kg	X	U	X	N.A.	N.A.
group 0+	up to 13 kg	X	U	X	N.A.	N.A.
group I	9 to 18 kg	X	U	X	N.A.	N.A.
group II	15 to 25 kg	X	UF	X	N.A.	N.A.
group III	22 to 36 kg	X	UF	X	N.A.	N.A.

In case the front passenger airbag is deactivated.

Mass Group		Seating position (or other site)				
		Front Passenger	Rear Outboard	Rear Center	Intermediate Outboard	Intermediate Center
group 0	up to 10 kg	U[1)]	U	X	N.A.	N.A.
group 0+	up to 13 kg	U[1)]	U	X	N.A.	N.A.
group I	9 to 18 kg	U[1)]	U	X	N.A.	N.A.
group II	15 to 25 kg	UF[1)]	UF	X	N.A.	N.A.
group III	22 to 36 kg	UF[1)]	UF	X	N.A.	N.A.

Key of letters to be inserted in the above table:

U =Suitable for ‘universal’ category restraints approved for use in this mass group
UF =Suitable for forward-facing ‘universal’ category restraints approved for use in this mass group
L =Suitable for particular child restraints given on attached list.
These restraints may be of the ‘specific vehicle’, ‘restricted’ or ‘semi-universal’ categories.
B =Built-in restraint approved for this mass group
X =Seat position not suitable for children in this mass group

NOTE:
1) Front seat longitudinal adjustment should be rearmost position.
Front seat height adjustment should be upmost position if equipped.

NOTE:
‘universal’ is the category in UN Vehicle Regulation No. 44.

Installation suitability of ISOFIX child restraint systems

Mass Group		Size class	Fixture	Vehicle ISOFIX positions					
				Front Passenger	Rear Outboard	Rear Center	Intermediate Outboard	Intermediate Center	Others sites
carrycot		F	ISO/L1	N.A.	N.A.	N.A.	N.A.	N.A.	N.A.
		G	ISO/L2	N.A.	N.A.	N.A.	N.A.	N.A.	N.A.
group 0	up to 10 kg	E	ISO/R1	N.A.	IL,IUF[1), 4)]	N.A.	N.A.	N.A.	N.A.
group 0+	up to 13 kg	E	ISO/R1	N.A.	IL,IUF[1), 4)]	N.A.	N.A.	N.A.	N.A.
		D	ISO/R2	N.A.	IL,IUF[1)]	N.A.	N.A.	N.A.	N.A.
		C	ISO/R3	N.A.	IL,IUF[1), 2)]	N.A.	N.A.	N.A.	N.A.
group I	9 to 18 kg	D	ISO/R2	N.A.	IL,IUF[1)]	N.A.	N.A.	N.A.	N.A.
		C	ISO/R3	N.A.	IL,IUF[1), 2)]	N.A.	N.A.	N.A.	N.A.
		B	ISO/F2	N.A.	IL,IUF[1)]	N.A.	N.A.	N.A.	N.A.
		B1	ISO/F2X	N.A.	IL,IUF[1), 3)]	N.A.	N.A.	N.A.	N.A.
		A	ISO/F3	N.A.	IL,IUF[1), 2)]	N.A.	N.A.	N.A.	N.A.
group II	15 to 25 kg			N.A.	N.A.	N.A.	N.A.	N.A.	N.A.
group III	22 to 36 kg			N.A.	N.A.	N.A.	N.A.	N.A.	N.A.

Key of letters to be inserted in the above table

IUF = Suitable for ISOFIX forward child restraints systems of universal category approved for use in this mass group
IL = Suitable for particular ISOFIX CRS are those of “specific vehicle”, “restricted” or “semi-universal” categories.
X = ISOFIX position not suitable for ISOFIX child restraint systems in this mass group and/or this size class.

NOTE:
1) The head restraint should be removed.

2) SUZUKI recommends “FAIR” child seat and platform.
SUZUKI Genuine Accessory part number:
990E0-84M01-000 ISOFIX Platform
990E0-68L01-001 Child seat for eastern Europe (PL, H, CZ, SK, SLO, RO, BG, GR, CY)
990E0-68L01-002 Child seat for central and southern Europe (F, B, NL, L, E, P, I, D, AT, IR, GB, M, CY)
990E0-68L01-003 Child seat for northern Europe (S, FIN, DK, EST, LV, LT)
Ask an authorized SUZUKI dealer for detailed district information.

3) SUZUKI recommends “Duo Plus” child seat.
SUZUKI Genuine Accessory part number: 990E0-59J56-000

4) SUZUKI recommends “Baby Safe Plus” child seat.
SUZUKI Genuine Accessory part number: 990E0-59J37-001

NOTE:
‘universal’ is the category in UN Vehicle Regulation No. 44.

Installation suitability of i-Size child restraint systems

	Seating position						
	Front Passenger Outboard	Rear Outboard Left	Rear Outboard Right	Rear Center	Intermediate Outboard Left	Intermediate Outboard Right	Intermediate Center
i-Size Child Restraint	N.A.	i-U	i-U	N.A.	N.A.	N.A.	N.A.

Key of letters to be inserted in the above table
i-U =Suitable for i-Size “universal” Child Restraint Systems forward and rearward facing.
i-UF =Suitable for forward-facing i-Size “universal” Child Restraint Systems only.
X =Seating position not suitable for i-Size “universal” Child Restraint Systems.

NOTE:
‘universal’ is the category in UN Vehicle Regulation No. 44.

Installation with lap-shoulder seat belts

Rear outside seat belt guide

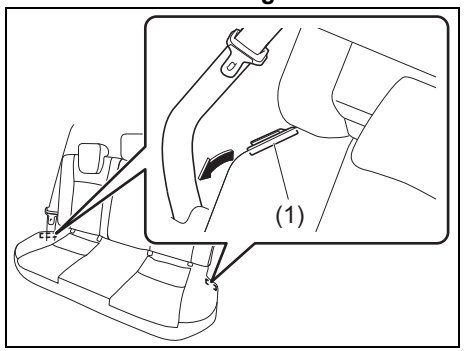

54P000260

⚠ WARNING

If rear outside seat belt is fastened without unhooking the webbing from the belt guide (1), a child restraint system cannot be installed properly in the rear seat.

NOTICE

Before installing a child restraint system in the rear seat, remove the head restraints.

NOTE:
Stow the removed head restraint in the luggage compartment so it will not cause inconvenience to the occupants.

ELR type belt

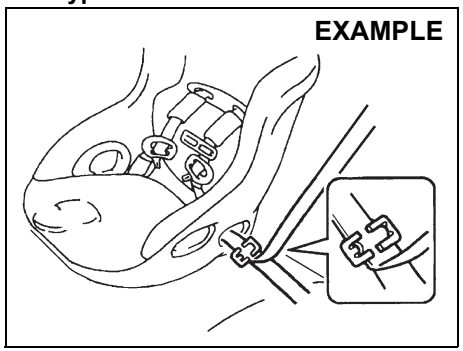

80JC021

(For models with front passenger air bag deactivation system)
Whenever possible, SUZUKI recommends that child restraint systems be installed on the rear seat. According to accident statistics, children are safer when properly restrained in rear seating positions than in front seating positions.

- If you must install the child restraint system on the front passenger's seat, follow instructions below.
  - Deactivate the front passenger's front air bag by the front passenger air bag deactivation system.
  - Slide the seat to the most rear position by the seat position adjustment lever.
  - Adjust the seatback at the 5th step inclined position (counted from most upright position) with the seatback angle adjustment lever.
  - If your vehicle is equipped with the seat height adjustment lever, raise the seat to the uppermost position by the seat height adjustment lever.

Install your child restraint system according to the instructions provided by the child restraint system manufacturer.

Check that the seat belt is securely latched.
Move the child restraint system in all directions to check that it is securely installed.
When you put your child in the child restraint system, appropriately slide the front seat forward not to touch a part of your child's body.

Installation with ISOFIX type anchorages

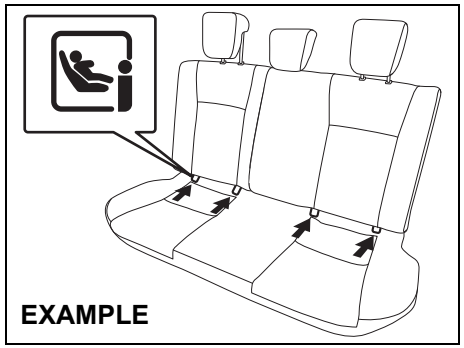

54P000223

Your vehicle is equipped with the lower anchorages in the rear seat outboard seating positions for securing a ISOFIX type of child restraints with the connecting bars. The lower anchorages are located where the rear of the seat cushion meets the bottom of the seatback.

⚠ WARNING

Install the ISOFIX type of child restraint(s) in the only outboard seating positions, not in the central position for the rear seat.

Install the ISOFIX type child restraint system according to the instructions provided by the child restraint system manufacturer. After installation, try moving the child restraint system in all directions especially forward to check that connecting bars are securely latched to the anchorages.

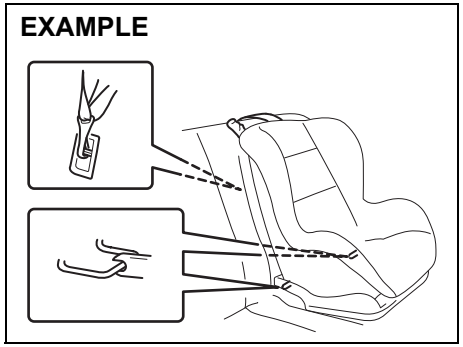

84MM00252

Your vehicle is equipped with the top tether anchorages. Use the top tether strap of the child restraint according to the instructions provided by the child restraint system manufacturer.

Here is a general instruction:

1) Remove the head restraints.

NOTICE

Before installing a child restraint system in the rear seat, remove the head restraints.

NOTE:
Stow the removed head restraint in the luggage compartment so it will not cause inconvenience to the occupants.

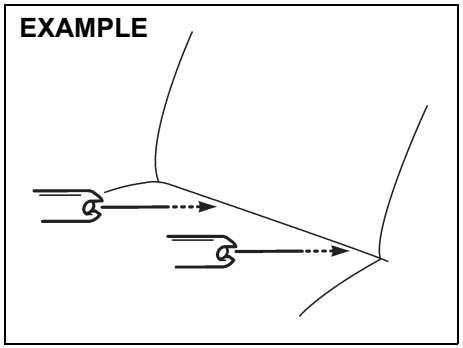

78F114

2) Place the child restraint in the rear seat, inserting the connecting bars to the anchorages between the seat cushion and the seatback.

EXAMPLE

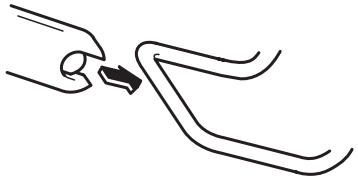

68LM268

3) Use your hands to carefully align the connecting bar tips with the anchorages. Take care not to pinch your fingers.

EXAMPLE

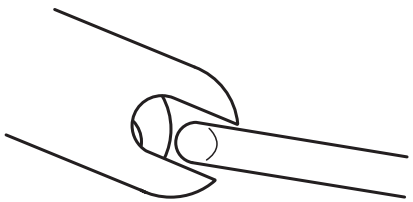

54G184

4) Push the child restraint toward the anchorages so that the connecting bar tips are partially hooked to the anchorages. Use your hands to confirm the position.

EXAMPLE

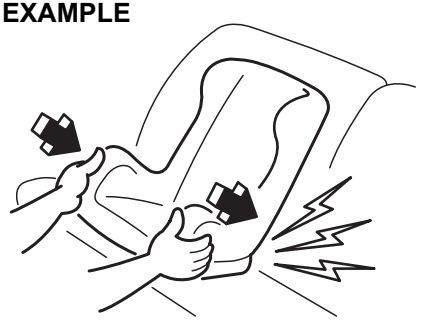

54G185

5) Grasp the front of the child restraint and push the child restraint forcefully to latch the connecting bars. Check that they are securely latched by trying to move the child restraint system in all directions, especially forward.
6) Attach the top tether strap referring to “Installation of child restraint with top tether” section below.
When you put your child in the child restraint system, appropriately slide the front seat forward not to touch a part of your child’s body.

NOTICE

When installing a child restraint system to the rear seat, adjust the front seat position so that the front seat does not interfere with the child restraint system.

Installation of child restraint with top tether

EXAMPLE

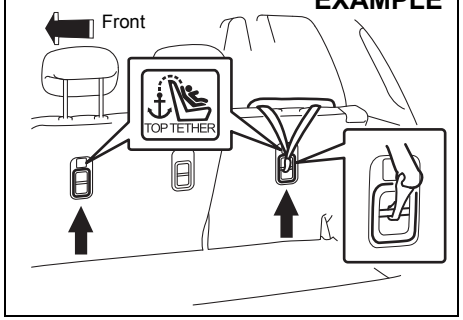

54P000249

Some child restraint systems require the use of a top tether strap. Top tether anchorage brackets are provided in your vehicle at the locations shown in the illustrations.
The number of the top tether anchorage brackets provided in your vehicle depends on the vehicle specification. Install the child restraint system as follows:

1) Remove the luggage compartment cover.
2) Secure the child restraint on the rear seat using the procedure described above for securing a restraint system that does not require a top tether strap.
3) Hook the top tether strap to the top tether anchorage bracket and tighten the top tether strap according to the instructions provided by the child restraint system manufacturer. Attach the top tether strap to the corresponding top tether anchorage bracket located directly behind the child restraint. Do not attach the top tether strap to the luggage restraint loops.

⚠ WARNING

Do not attach the child restraint top tether strap to the luggage restraint loops. Incorrectly attached top tether strap will reduce the intended effectiveness of the child restraint system.

EXAMPLE

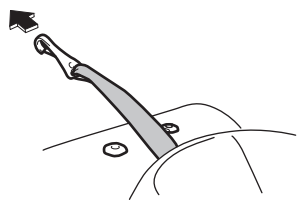

54P000264

4) When routing the top tether strap, pass the top tether strap as shown in the illustration. (Refer to “Head restraints” section for details on how to remove the head restraint.)
5) Check that cargo does not interfere with routing of the top tether strap.

NOTICE

When installing a child restraint system to the rear seat, adjust the front seat position so that the front seat does not interfere with the child restraint system.

Seat belt pretensioner system

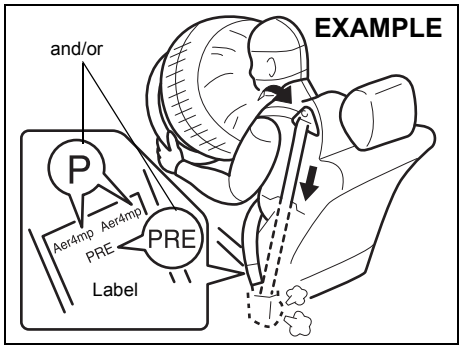

63J269

⚠ WARNING

This section describes your SUZUKI vehicle’s seat belt pretensioner system. Read and follow all these instructions carefully to minimize your risk of severe injury or death.

To determine if your vehicle is equipped with a seat belt pretensioner system at the front or rear seating positions, check the label on the seat belt at the bottom part. If the letters “p” and/or “PRE” appear as illustrated, your vehicle is equipped with the seat belt pretensioner system. You can use the pretensioner seat belts in the same manner as ordinary seat belts.
Read this section and “Supplemental restraint system (air bags)” section to learn more about the pretensioner system.

The seat belt pretensioner system works with the supplemental restraint system (air bags). The crash sensors and the electronic controller of the air bag system also control the seat belt pretensioners. The pretensioners are triggered only when there is a frontal or side crash severe enough to trigger the air bags and the seat belts are fastened. For precautions and general information including servicing the pretensioner system, refer to “Supplemental restraint system (air bags)” section in addition to this “Seat belt pretensioner system” section, and follow all those precautions.

The pretensioner is located in each front seat belt and both side of the rear seat belt retractor. The pretensioner tightens the seat belt so the belt fits the occupant’s body more snugly in the event of a frontal or side crash. The retractors will remain locked after the pretensioners are activated. Upon activation, some noise will occur and some smoke may be released. These conditions are not harmful and do not indicate a fire in the vehicle.

The driver and all passengers must be properly restrained by fastening seat belts at all times, whether or not a pretensioner is equipped at their seating position, to minimize the risk of severe injury or death in the event of a crash.

Sit fully back in the seat; sit up straight; do not lean forward or sideways. Adjust the belt so the lap portion of the belt is worn low across the pelvis, not across the waist. Please refer to “Seat adjustment” section and the instructions and precautions about the seat belts in this “Seat belts and child restraint systems” section for details on proper seat and seat belt adjustments.

Please note that the pretensioners along with the air bags will activate in severe frontal or side crashes. They are not designed to activate in rear impacts, rollovers, or minor frontal side crashes. The pretensioners can be activated only once. If the pretensioners are activated (that is, if the air bags are activated), have the pretensioner system serviced by an authorized SUZUKI dealer as soon as possible.

If AIR BAG light on the instrument cluster does not blink or come on briefly when the ignition switch is turned to “ON” position or the engine switch is pressed to change the ignition mode to “ON”, stays on for more than 10 seconds, or comes on while driving, the pretensioner system or the air bag system may not work properly. Have both systems inspected by an authorized SUZUKI dealer as soon as possible.

Service on or around the pretensioner system components or wiring must be performed only by an authorized SUZUKI dealer who is specially trained. Improper service could result in unintended activation of pretensioners or could render the pretensioner inoperative. Either of these two conditions may result in personal injury.

To prevent damage or unintended activation of the pretensioners, check that the battery is disconnected and the ignition switch has been in “LOCK” position or the ignition mode has been “LOCK” (OFF) for at least 90 seconds before performing any electrical service work on your SUZUKI vehicle.

Do not touch pretensioner system components or wiring. The wires are wrapped with yellow tape or yellow tubing, and the couplers are yellow. When scrapping your SUZUKI vehicle, ask your SUZUKI dealer, body repair shop, or scrap yard for assistance.

Supplemental restraint system (air bags)

⚠ WARNING

This section describes the protection provided by your SUZUKI vehicle's supplemental restraint system (air bags). Read and follow all instructions carefully to minimize your risk of severe injury or death in the event of a crash.

Your vehicle is equipped with a supplemental restraint system consisting of the following components in addition to a lap-shoulder belt at each seating position.

(1) Driver's front air bag module
(2) Front passenger's front air bag module
(3) Side air bag module (if equipped)
(4) Side curtain air bag module (if equipped)
(5) Driver's knee air bag module (if equipped)
(6) Front seat belt pretensioners
(7) Air bag controller
(8) Forward crash sensor
(9) Side crash sensor (if equipped)
(10) Rear seat belt pretensioners (if equipped)

EXAMPLE

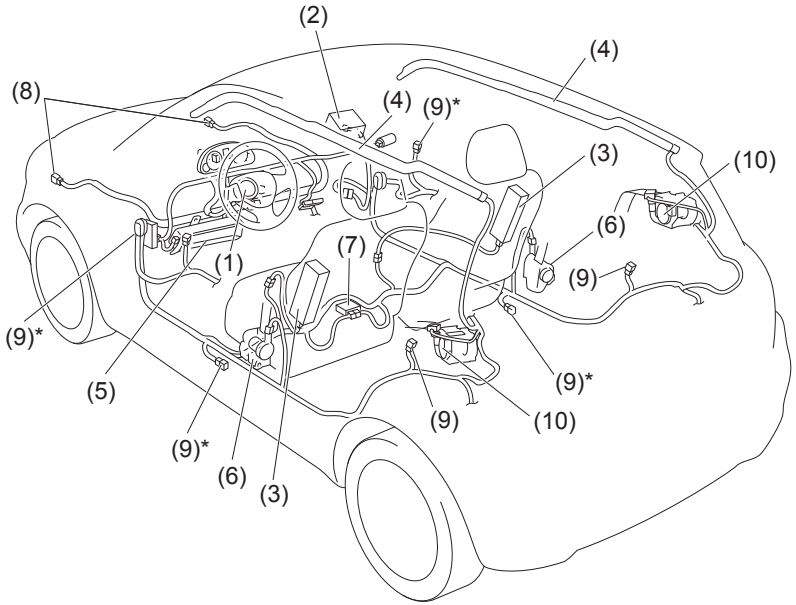

54P000224

* : Depending on the vehicle's specification, the number of this sensor is different.

⚠ WARNING

An air bag supplements or adds to the crash protection offered by seat belts. The driver and all passengers must be properly restrained by fastening seat belts at all times, whether or not an air bag is mounted at their seating position, to minimize the risk of severe injury or death in the event of a crash.

AIR BAG light

63J030

If AIR BAG light on the instrument cluster does not blink or come on when the ignition switch is first turned to ON position, or the ignition mode is first changed to “ON”, or AIR BAG light stays on, or comes on while driving, the air bag system (or the seat belt pretensioner system) may not work properly. Have the air bag system inspected by an authorized SUZUKI dealer as soon as possible.

Air bag symbol meaning

EXAMPLE

72M00150

You may find this label on the sun visor.

⚠ WARNING

NEVER use a rearward facing child restraint on a seat protected by an ACTIVE AIRBAG in front of it, DEATH or SERIOUS INJURY to the CHILD can occur.

Front air bags

EXAMPLE

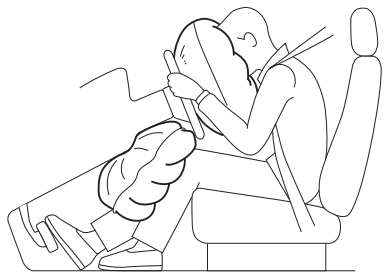

57L21189

Front air bags are designed to inflate in severe frontal crashes when the ignition switch is in “ON” position or the ignition mode is “ON”.

NOTE:
In a frontal angle crash, the side air bags (if equipped) and side curtain air bags (if equipped) may inflate.

Front air bags are not designed to inflate in rear impacts, side impacts, rollovers or minor frontal crashes, since they would offer no protection in those types of accidents. Since an air bag deploys only one time during an accident, seat belts are needed to restrain occupants from further movements during the accident.

Therefore, an air bag is not a substitute for seat belts. To maximize your protection, always fasten your seat belts. Be aware that no system can prevent all possible injuries that may occur in an accident.

Driver's front air bag

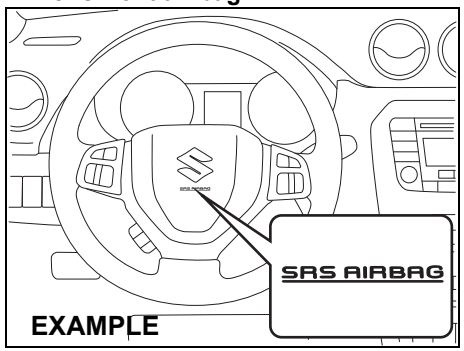

54P000225

Front passenger's front air bag

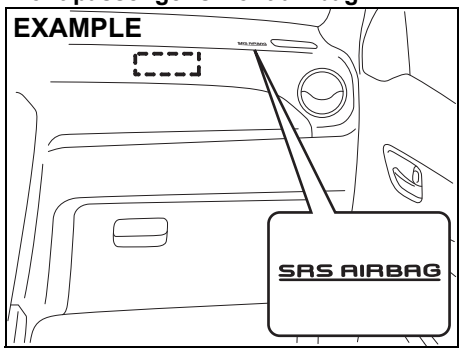

54P000226

Driver's knee air bag (if equipped)

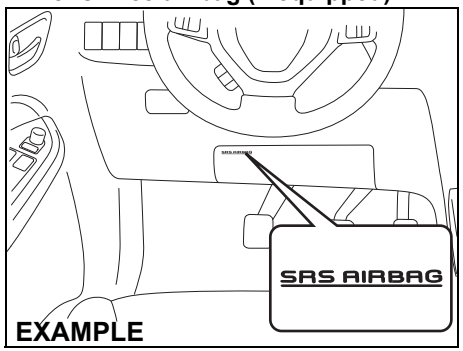

54P000227

The driver's front air bag is located behind the center pad of the steering wheel and the front passenger's front air bag is located behind the passenger's side of the dashboard.
The driver's knee air bag is located in the dashboard below the steering wheel. The words "SRS AIRBAG" are molded into the air bag covers to identify the location of the air bags.

58MS030

⚠ WARNING

(Vehicle without the front passenger air bag deactivation system)
Do not install a rear-facing child restraint in the front passenger's seat. If the passenger's front air bag inflates, a child in a rear-facing child restraint could be killed or severely injured. The back of a rear-facing child restraint would be too close to the inflating air bag.

⚠ WARNING

(Vehicle with the front passenger air bag deactivation system)
When using child restraint system on the front passenger's seat, the front passenger's air bag system must be deactivated; otherwise deployment of the front passenger's air bag could result in the death or serious injury of the child.

Refer to "Seat belts and child restraint systems" section for details on securing your child.

Conditions of front air bags deployment (inflation)

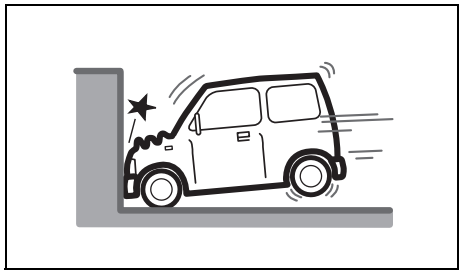

80J097

- Frontal crash with a fixed wall that does not move or deform in more than about 25 km/h (15 mph)

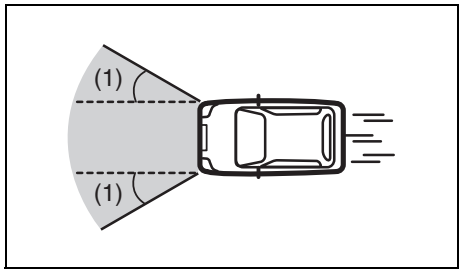

80J098E

- Crash such as above at an angle of about 30 degrees (1) or less from the front

Conditions of front air bags may inflate
Receiving a strong impact to the lower body of your vehicle, the front air bags will inflate in many cases.

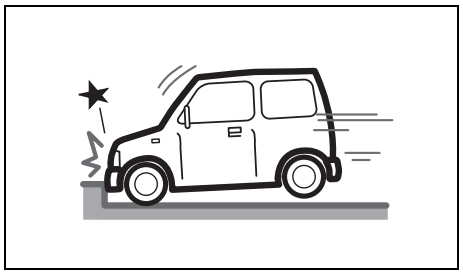

80J099

- Hitting a curb or medial strip

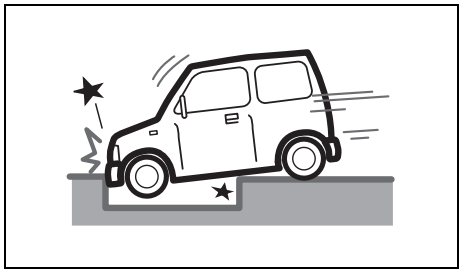

80J100E

- Falling into a deep hole or ditch

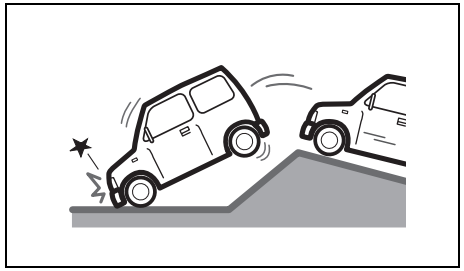

80J101

- Landing hard or falling

Front air bags may inflate in a strong impact

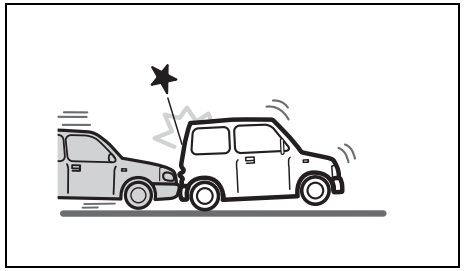

80J120

- Crash from the rear

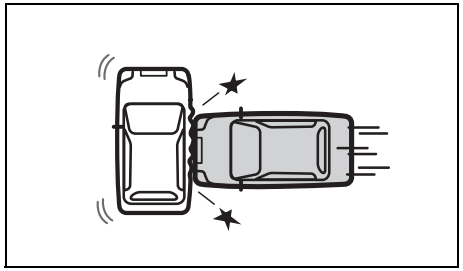

80J119

- Crash from the side

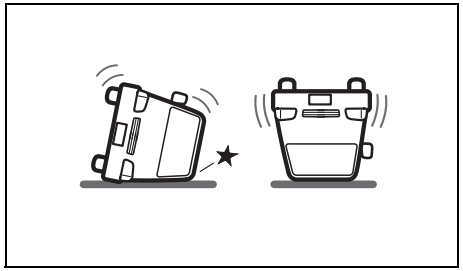

80J110

- Vehicle rollover

Front air bags may not inflate

The front air bags may not inflate when the impact is absorbed since the crash object moved, vehicle body deformed, or crash angle was greater than about 30 degrees from the front.

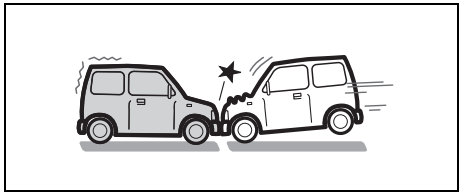

80J102

- Approximately 50 km/h (30 mph) or lower speed frontal crash to a stopped vehicle

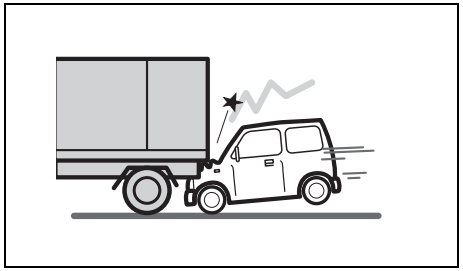

80J103

- Crash that the front of your vehicle goes under the bed of a truck etc.

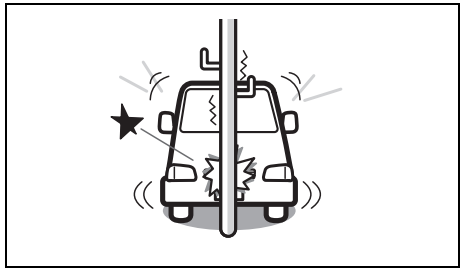

80J104

- Crash with a utility pole or stumpage

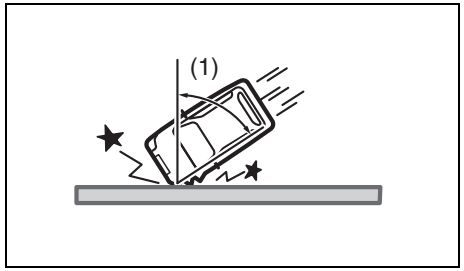

80J105E

- Crash with a fixed wall or guardrail at an angle of greater than about 30 degrees (1) from the front

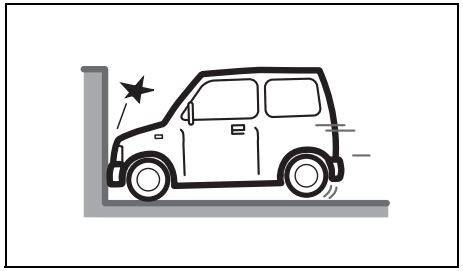

80J106

- Frontal crash with a fixed wall that does not move or deform in less than about 25 km/h (15 mph)

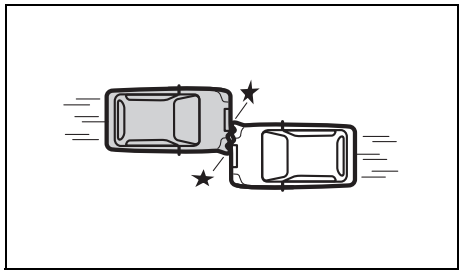

80J107

- Crash angle is offset from the vehicle angle (offset crash)

Side air bags and side curtain air bags (if equipped)

EXAMPLE

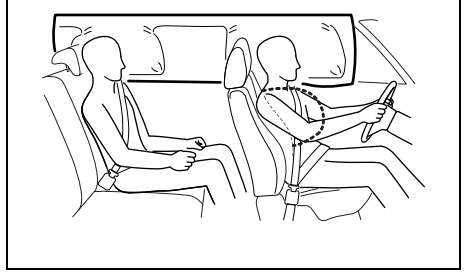

68KM090

Side air bags and side curtain air bags are designed to inflate in severe side impact crashes when the ignition switch is in “ON” position or the ignition mode is “ON”.

Side air bags and side curtain air bags are not designed to inflate in frontal or rear crashes, rollovers or minor side crashes, since they would offer no protection in those types of accidents. Only the side air bag and side curtain air bag on the side of the vehicle that is struck will inflate. However, in a frontal angle crash, the side air bags and side curtain air bags may inflate. Since an air bag deploys only one time during an accident, seat belts are needed

to restrain occupants from further movements during the accident.

Therefore, an air bag is not a substitute for seat belts. To maximize your protection, always fasten your seat belts. Be aware that no system can prevent all possible injuries that may occur in an accident.

Side air bags (if equipped)

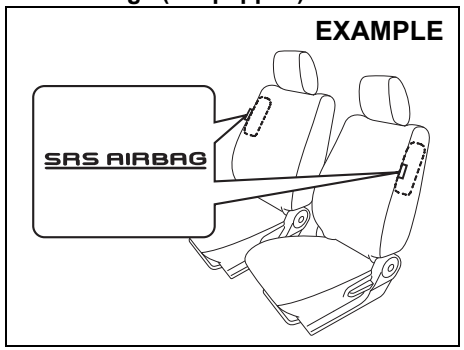

61MM0A068

Side air bags are located in the part of the front seatbacks closest to the doors. The “SRS AIRBAG” labels are attached to the seatbacks to identify the location of the side air bags.

Side curtain air bags (if equipped)

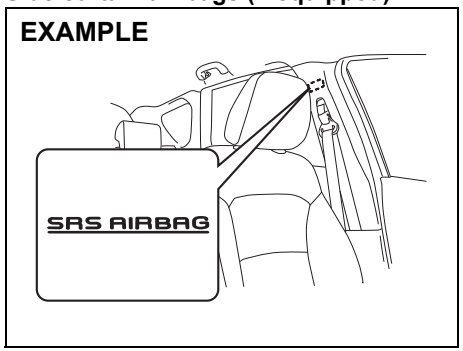

54P000250

Side curtain air bags are located in the roof lining. The words “SRS AIRBAG” are molded into the pillar to identify the location of the side curtain air bags.

Conditions of side air bags and side curtain air bags deployment (inflation)

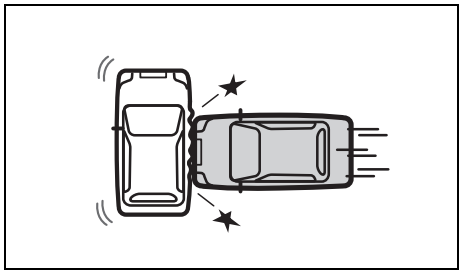

80J119

- Crashes from the side by a vehicle equivalent to your vehicle in more than about 25 km/h (15 mph) or in greater crashes from the side

Side air bags and side curtain air bags may inflate in a strong impact

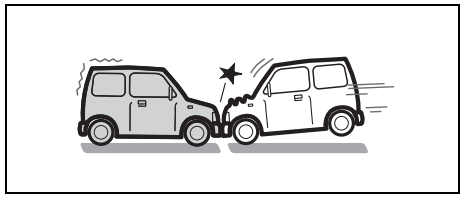

80J102

- Crash from the front

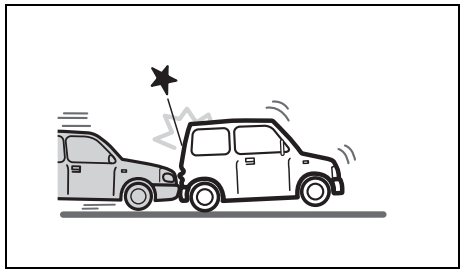

80J120

- Crash from the rear

Side air bags and side curtain air bags may not inflate

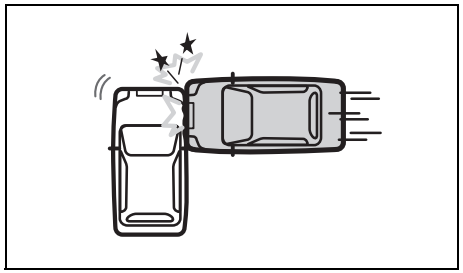

80J121

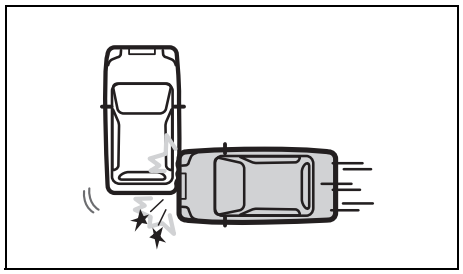

80J122

- Crash from the side to the vehicle body other than the passenger compartment

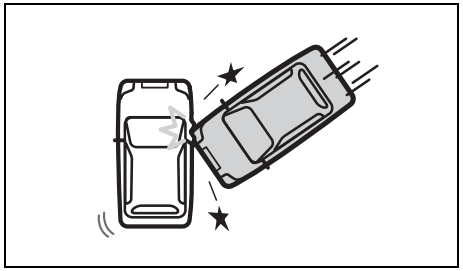

80J123

- Crash from the side at an angle

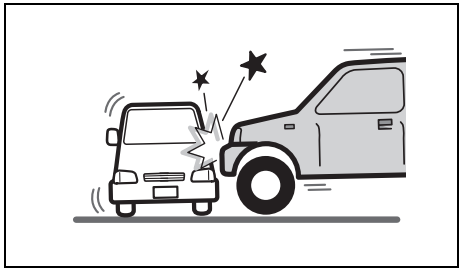

80J124

- Crash from the side with a high-height vehicle

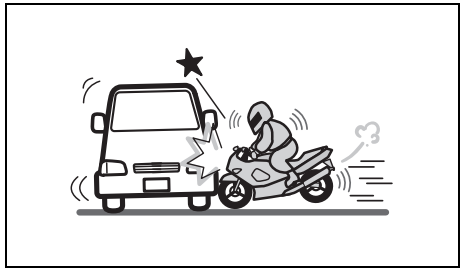

80J125

- Crash from the side by a motorcycle or bicycle

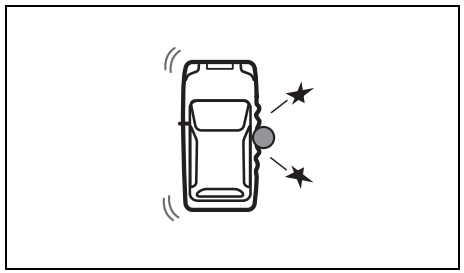

80J126

- Crash with a utility pole or stumpage

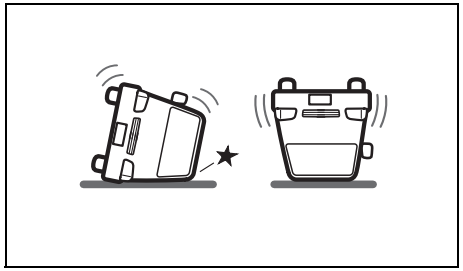

80J110

- Vehicle rollover

How the system works

In a frontal crash, the crash sensors will detect rapid deceleration, and if the controller judges that the deceleration represents a severe frontal crash, the controller will trigger the inflators. If your vehicle is equipped with side air bags and side curtain air bags, crash sensors will detect a side crash, and if the controller judges that the side crash is severe enough, it will trigger the side air bag and side curtain air bag inflators. The inflators inflate the appropriate air bags with nitrogen or argon gas. The inflated air bags provide a cushion for your head (front air bags and side curtain air bags only) and upper body. The air bag inflates and deflates so quickly that you may not even realize that it has activated. The air bag will neither hinder your view nor make it harder to exit the vehicle.

Air bags must inflate quickly and forcefully in order to reduce the chance of serious or fatal injuries. However, an unavoidable consequence of the quick inflation is that the air bag may irritate bare skin, such as the facial area against a front air bag. Also, upon inflation, a loud noise will occur and some powder and smoke will be released. These conditions are not harmful and do not indicate a fire in the vehicle. Be aware, however, that some air bag components may be hot for a while after inflation.

A seat belt helps keep you in the proper position for maximum protection when an air bag inflates. Adjust your seat as far back as possible while still maintaining control of the vehicle. Sit fully back in your seat; sit up straight; do not lean over the steering wheel or dashboard. Front occupants should not lean on or sleep against the door. Refer to “Seat adjustment” section and “Seat belts and child restraint systems” section in this section for details on proper seat and seat belt adjustments.

65D610

54G582

⚠ WARNING

- **The driver should not lean over the steering wheel. The front passenger should not rest his or her body against the dashboard, or otherwise get too close to the dashboard. For vehicles with side air bags and side curtain air bag, occupants should not lean on or sleep against the door. In these situations, the out-of-position occupant would be too close to an inflating air bag, and may suffer severe injury.**
- **Do not attach any objects to, or place any objects over, the steering wheel or dashboard. Do not place any objects between the air bag and the driver or front passenger. These objects may interfere with air bag operation or may be propelled by the air bag in the event of a crash. Either of these conditions may cause severe injury.**
- **For vehicles with side air bags, do not place seat covers on the front seats, because seat covers could restrict the air bag's inflation. Also, do not place any cup holders on the door, as the cup holder could be propelled by the air bag in the event of a crash. Either of these conditions may cause severe injury.**

(Continued)

⚠ WARNING

(Continued)

- **Do not paint, put a sticker on, or attach things like accessories to the dashboard below the steering wheel. Failure to observe this precaution may prevent normal inflation of the driver's knee air bag in the event of a crash.**

Even though your vehicle is moderately damaged by a crash, it may not be severe enough to trigger front, side or side curtain air bags to inflate. If your vehicle sustains any front-end or side damage, have the air bag system inspected by an authorized SUZUKI dealer to ensure that it works properly.

Your vehicle is equipped with a diagnostic module which records information about the air bag system if the air bags deploy in a crash. The module records information about overall system status, and which sensors activated the deployment.

Servicing the air bag system

If the air bags inflate, have the air bags and related components replaced by an authorized SUZUKI dealer as soon as possible.

If your vehicle ever gets in deep water and the driver's floor is submerged, the air bag controller could be damaged. If this hap-

pens, ask your SUZUKI dealer to check the air bag system as soon as possible.

Special procedures are required for servicing or replacing an air bag. For that reason, only an authorized SUZUKI dealer should be allowed to service or replace your air bags. Remind anyone who services your SUZUKI vehicle that it has air bags.

Service on or around air bag components or wiring must be performed only by an authorized SUZUKI dealer. Improper service could result in unintended air bag deployment or could render the air bag inoperative. Either of these two conditions may result in severe injury.

To prevent damage or unintended inflation of the air bag system, check that the battery is disconnected and the ignition switch has been in “LOCK” position or the ignition mode has been “LOCK” (OFF) for at least 90 seconds before performing any electrical service work on your SUZUKI vehicle. Do not touch air bag system components or wires. The wires are wrapped with yellow tape or yellow tubing, and the couplers are yellow for easy identification.

Scrapping a vehicle that has an uninflated air bag can be hazardous. Ask your dealer, body repair shop or scrap yard for help with disposal.

Front passenger air bag deactivation system (if equipped)

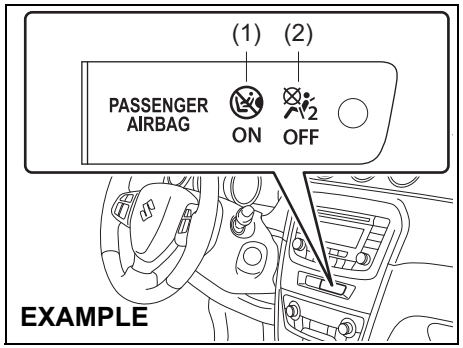

54P000228

The front passenger’s front air bag must be deactivated if a child restraint system is to be installed on the front passenger’s seat.
When the ignition switch is turned to “ON” position or the engine switch is pressed to change the ignition mode to “ON”, “PASSENGER AIRBAG ON” indicator (1) or “PASSENGER AIRBAG OFF” indicator (2) shows whether the front passenger’s air bag is activated or deactivated.

When the front passenger’s air bag is activated, both “PASSENGER AIRBAG ON” indicator (1) and “PASSENGER AIRBAG OFF” indicator (2) come on for a few seconds and then go out.
After that, only “PASSENGER AIRBAG ON” indicator (1) comes on for about 1 minute and then goes out.

When the front passenger’s air bag is deactivated, both “PASSENGER AIRBAG ON” indicator (1) and “PASSENGER AIRBAG OFF” indicator (2) come on for a few seconds and then go out.
After that, only “PASSENGER AIRBAG OFF” indicator (2) comes on.

When you activate or deactivate the front passenger’s air bag, check which indicator is on before starting the engine.

Side air bags, side curtain air bags and seat belt pretensioners are not connected to the air bag deactivation system. Even if the front passenger’s air bag is deactivated, side air bags, side curtain air bags and seat belt pretensioners are still activated.

58MS030

⚠ WARNING

When using child restraint system on the front passenger's seat, the front passenger's air bag must be deactivated; otherwise deployment of the front passenger's air bag could result in the death or serious injury of the child.

⚠ WARNING

Check that the front passenger's air bag is activated and "PASSENGER AIRBAG ON" indicator (1) is on whenever there is no child restraint installed on the front passenger's seat.

According to accident statistics, children are safer when properly restrained in rear seating positions than front seating positions. Whenever possible, SUZUKI recommends that child restraint systems be installed on the rear seat.

Air bag deactivation switch

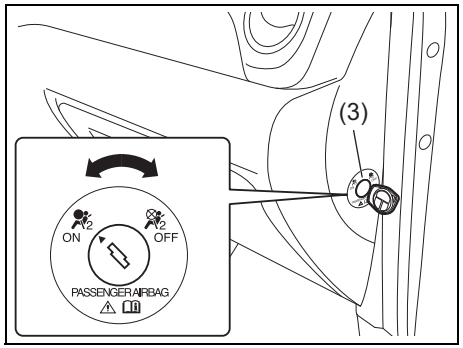

54P000229

The air bag deactivation switch (3) is installed only for use when a rear-facing child restraint system or infant restraint system is installed in the front passenger's seat. The switch is located on the lateral face of the passenger's side of the instrument panel.

To deactivate the front passenger's air bag, follow the instructions below before starting the engine.

1) Check that the ignition switch is in "LOCK" position or the engine switch is in "LOCK" (OFF) mode.
2) Insert the key into the air bag deactivation switch (3), then push and turn the key to "OFF" (air bag off) position, and pull out the key.
3) Turn the ignition switch to "ON" position or press the engine switch to change the ignition mode to "ON". Both indicators come on for a few seconds and then go out.
   After that, only "PASSENGER AIRBAG OFF" indicator (2) comes on to remind you that the front passenger's air bag is deactivated.

To activate the front passenger's air bag, follow the instructions below before starting the engine.

1) Check that the ignition switch is in "LOCK" position or the engine switch is in "LOCK" (OFF) mode.
2) Insert the key into the air bag deactivation switch (3), then push and turn the key to "ON" (air bag on) position, and pull out the key.
3) Turn the ignition switch to "ON" position or press the engine switch to change the ignition mode to "ON". Both indicators come on for a few seconds and then go out.
   After that, only "PASSENGER AIRBAG ON" indicator (1) comes on for about 1 minute and then goes out to remind you that the front passenger's air bag is activated.

Instrument cluster

1. Speedometer
2. Tachometer
3. Fuel gauge
4. Temperature gauge
5. Information display
6. Warning and indicator lights

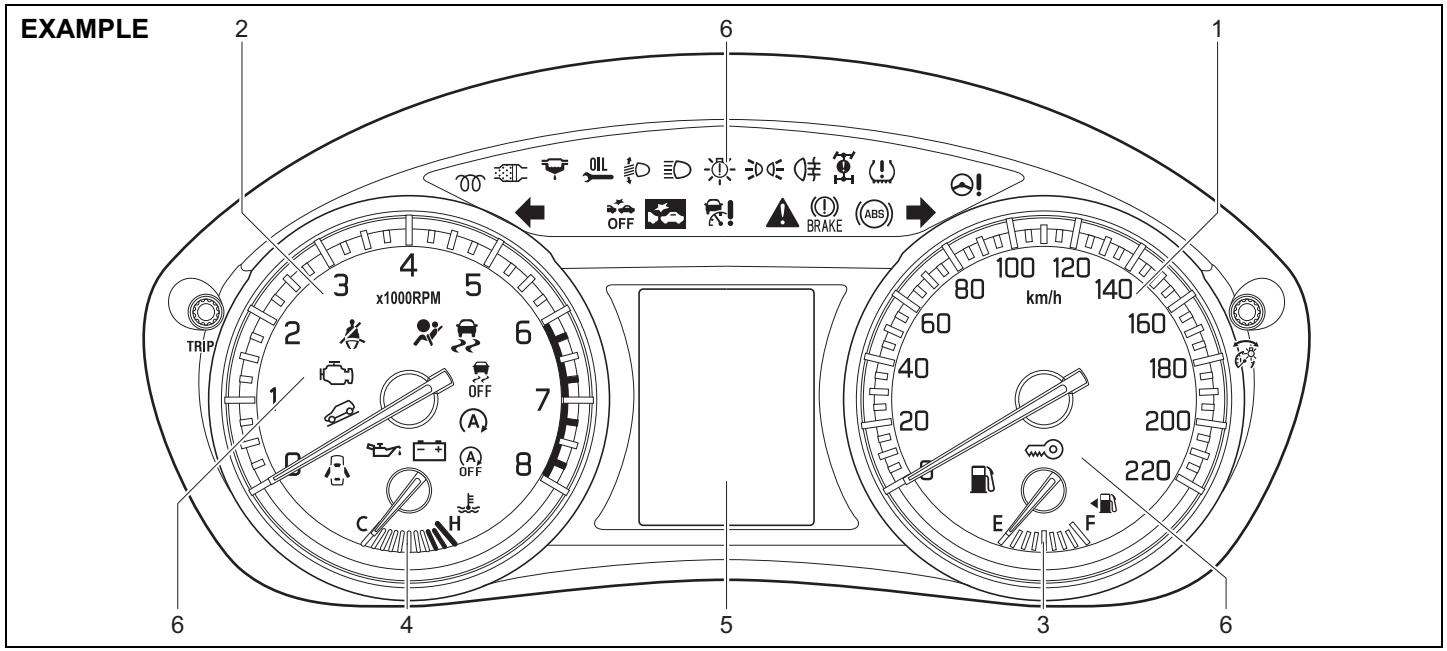

54P000230

Speedometer

The speedometer indicates vehicle speed.

Tachometer

The tachometer indicates engine speed in revolutions per minute.

NOTICE
Never drive the vehicle with the engine revving in the red zone or severe engine damage can result. **Keep the engine speed below the red zone even when downshifting to a lower gear position.** **Refer to "Downshifting maximum allowable speeds" in "OPERATING YOUR VEHICLE" section.**

Fuel gauge

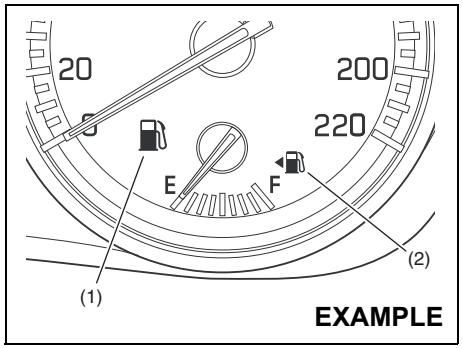

61MM0A154

When the ignition switch is in "ON" position or the ignition mode is "ON", this gauge gives an approximate indication of the amount of fuel in the fuel tank. "F" stands for full and "E" stands for empty.

If the indicator approaches a low level (near "E") on fuel gauge, refill the tank as soon as possible.

NOTE:
The indicator moves a little depending on road conditions (for example, slope or curve) and driving conditions because of fuel moving in the tank.

If the low fuel warning light (1) comes on, fill the fuel tank immediately.

Refer to "Low fuel warning light" in "Warning and indicator lights" in this section for details.

The mark (2) indicates that the fuel filler door is located on the left side of the vehicle.

Temperature gauge

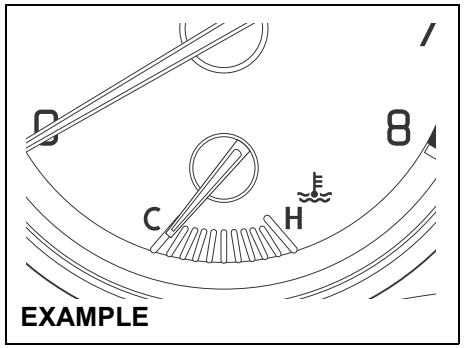

61MM0A155

When the ignition switch is in “ON” position or the ignition mode is “ON”, this gauge indicates the engine coolant temperature. Under normal driving conditions, the indicator should stay within the normal, acceptable temperature range between “H” and “C”. If the indicator approaches “H”, overheating is indicated. Follow the instructions for “Engine trouble: Overheating” in “EMERGENCY SERVICE” section.

NOTICE

Continuing to drive the vehicle when engine overheating is indicated can result in severe engine damage.

Brightness control

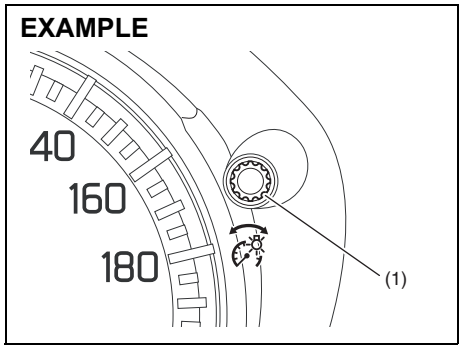

61MM0A156

When the ignition switch is turned to “ON” position or the engine switch is pressed to change the ignition mode to “ON”, the instrument cluster lights come on.

Your vehicle has a system to automatically dim the brightness of the instrument cluster lights when the position lights or headlights are on.

You can change the brightness of the instrument cluster lights regardless of whether the position lights or headlights are off or on.

To increase the brightness of the instrument cluster lights, turn the indicator selector knob (1) clockwise.

To reduce the brightness of the instrument cluster lights, turn the indicator selector knob (1) counterclockwise.

⚠ WARNING

Do not adjust the brightness of the instrument panel lights while driving. Otherwise, you could lose control of the vehicle.

NOTE:
- *If you do not turn the knob for more than 5 seconds while activating the brightness control, the brightness control display will be canceled automatically.*
- *When you reconnect the battery, the brightness of the instrument cluster lights will be reinitialized. Readjust the brightness according to your preference.*

NOTE:
If you select the high brightness level when the position lights or headlights are on, the instrument cluster lights are not dimmed.

Information display

The information display is shown when the ignition switch is in “ON” position or the ignition mode is “ON”.

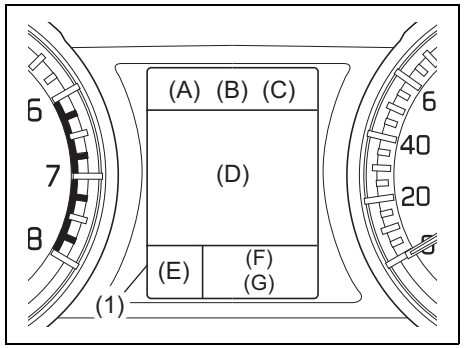

54P000231

(1) Information display

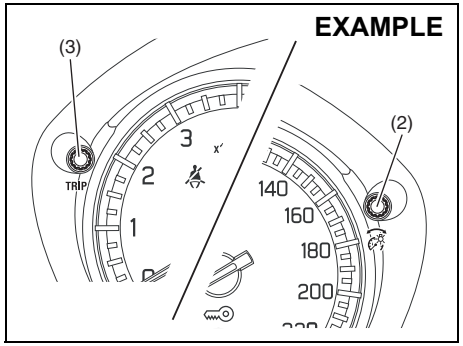

61MM0A158

(2) Indicator selector knob
(3) Trip meter selector knob

The information display shows the following information.

Display (A)
Clock

Display (B)
Driving mode (for 4WD models)

Display (C)
Thermometer

Display (D)
Warning and indicator messages /
Fuel consumption / Driving range /
Average speed /
Oil life (for diesel engine models)

Display (E)
Gearshift indicator

Display (F)
Trip meter

Display (G)
Odometer

54P000256

When the ignition switch is turned to “ON” position or the engine switch is pressed to change the ignition mode to “ON”, the message shown in the above illustration will appear on the display for several seconds.
Some warning and indicator messages may appear on the display when the ignition switch is in “ACC” or “LOCK” position, or the ignition mode is “ACC” or “LOCK” (OFF).

Clock

The display (A) shows the time.

To set the clock, follow “Setting mode” instructions in this section.

Driving mode (for 4WD models)

The display (B) shows the driving mode.

For details on how to use the four-mode 4WD system, refer to “Four-mode 4WD system (if equipped)” in “OPERATING YOUR VEHICLE” section.

Thermometer

The display (C) shows the thermometer.

The thermometer indicates the outside temperature.

54P000257

If the outside temperature nears freezing, the message shown in the above illustration will appear on the display.

NOTE:
The outside temperature indication is not the actual outside temperature when driving at low speed, or when stopped.

Fuel consumption / Driving range / Average speed / Oil life (if equipped)

When there are no warning or indicator messages on the display (D), you can select one of the following indications to appear on the display: instantaneous fuel consumption, average fuel consumption, driving range, average speed, oil life or no indication.

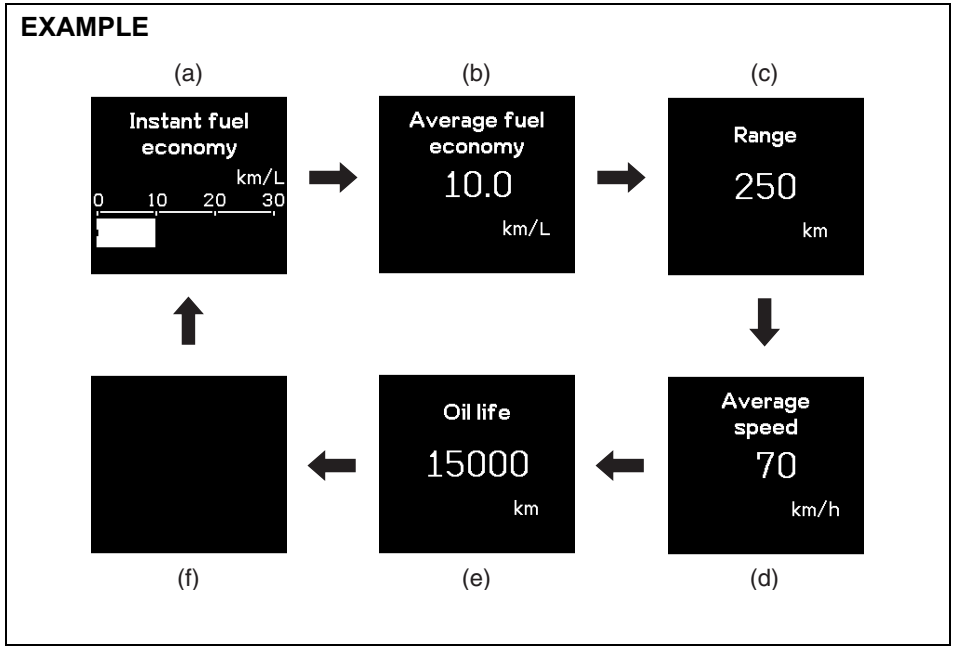

61MM0A228

(a) Instantaneous fuel consumption
(b) Average fuel consumption
(c) Driving range
(d) Average speed
(e) Oil life (for diesel engine models)
(f) No indication

To switch the display indication, push the indicator selector knob (2) quickly.

NOTE:
The value of fuel consumption, driving range and average speed shown on the display are affected by the following conditions;
- *road condition*
- *surrounding traffic condition*
- *driving condition*
- *vehicle condition*
- *a malfunction which causes the malfunction indicator light to come on or blink*

Instantaneous fuel consumption
The display shows instantaneous fuel consumption with a bar graph only when the vehicle is moving.

NOTE:
- *The display does not show the bar graph unless the vehicle is moving.*
- *Depending on the vehicle's specification, the fuel consumption units of initial setting are indicated as L/100km, km/L or MPG.*
- *For L/100km or km/L setting, the indicated maximum value of instantaneous fuel consumption is 30. No more than 30 will be indicated on the display even if the actual instantaneous fuel consumption is higher.*
- *For MPG setting, the indicated maximum value of instantaneous fuel consumption is 80. No more than 80 will be indicated on the display even if the actual instantaneous fuel consumption is higher.*
- *The indication on the display may be delayed if fuel consumption is greatly affected by driving conditions.*
- *The display shows estimated values. Indications may not be the same as actual values.*

Average fuel consumption
If you selected average fuel consumption the last time you drove the vehicle, the display shows the last value of average fuel consumption from previous driving when the ignition switch is turned to "ON" position or the engine switch is pressed to change the ignition mode to "ON". Unless you reset the value of average fuel consumption, the display indicates the value of average fuel consumption based on the average fuel consumption during previous driving.

NOTE:
When you reconnect the negative (–) terminal to the battery, the value of average fuel consumption will be shown after driving for a period of time.

You can select when the value of average fuel consumption is reset from among the following three methods;
- Reset after refuel: the value of average fuel consumption will be reset automatically by refueling.
- Reset with trip meter A: the value of average fuel consumption will be reset automatically by resetting trip meter A.
- Reset manually: the value of average fuel consumption will be reset by pushing and holding the indicator selector knob (2) when the display indicates the average fuel consumption.

To change when the value of average fuel consumption is reset, refer to "Setting mode" in this section.

NOTE:
If you add only a small amount of fuel when you select "Reset after refuel", the average fuel consumption value may not be reset.

Driving range
If you selected driving range the last time you drove the vehicle, the display indicates "---" for a few seconds and then indicates the current driving range when the ignition switch is turned to "ON" position or the engine switch is pressed to change the ignition mode to "ON".

The driving range shown in the display is the approximate distance you can drive until the fuel gauge indicates "E", based on current driving conditions.

When the low fuel warning light comes on, the display "---" will appear.
If the low fuel warning light comes on, fill the fuel tank immediately regardless of the value of driving range shown in the display.

As the driving range after refueling is calculated based on the most recent driving condition, the value is different each time you refuel.

NOTE:
- *If you refuel when the ignition switch is in "ON" position or the ignition mode is "ON", the driving range may not indicate the correct value.*

- *When you reconnect the negative (–) terminal to the battery, the value of driving range will be shown after driving for a period of time.*

Average Speed
If you selected average speed the last time you drove the vehicle, the display indicates the last value of average speed from previous driving when the ignition switch is turned to “ON” position or the engine switch is pressed to change the ignition mode to “ON”. Unless you reset the value of average speed, the display indicates the value of average speed which includes average speed during previous driving.

To reset the value of average speed, push and hold the indicator selector knob (2) for about 2 seconds when the display indicates an average speed. The display shows “---” and then indicates a new average speed after driving for a short time.

NOTE:
When you reconnect the negative (–) terminal to the battery, the value of average speed will be shown after driving for a period of time.

Oil life (for diesel engine models)
The display indicates the remaining distance until the timing calculated for the next engine oil and oil filter change. When the remaining distance becomes 0 km, the oil change request light in the instrument cluster also starts blinking to alert that you should change the engine oil and oil filter immediately.
If you selected oil life the last time you drove the vehicle, the display indicates “---” for a few seconds and then indicates the current distance until the next engine oil change is due, when the ignition switch is turned to “ON” position or the engine switch is pressed to change the ignition mode to “ON”.

Whenever the engine oil and oil filter are changed, the oil life monitoring must be reset in order to monitor the next oil and oil filter change timing properly. To reset the indicator, consult your SUZUKI dealer.
When the oil life monitoring is reset, the oil life monitoring indicates 30000 km. If the oil change request light was blinking, it will go out.

NOTICE

Change the engine oil and oil filter immediately when the remaining distance of the oil life monitoring indication becomes close to 0 km. If you keep operating the engine with 0 km indication of oil life monitoring, severe engine damage can result.

Gearshift indicator

The display (E) shows the gearshift indicator.

EXAMPLE

54P000232

Refer to “Gearshift indicator” in “OPERATING YOUR VEHICLE” section.

Trip meter

The display (F) shows the trip meter.

The trip meter can be used to measure the distance traveled on short trips or between fuel stops.
You can use trip meter A or trip meter B independently.

To reset the trip meter to zero, push and hold the trip meter selector knob (3) for about 2 seconds when the display shows the trip meter.

Odometer

The display (G) shows the odometer.

The odometer records the total distance the vehicle has been driven.

NOTICE

Keep track of your odometer reading and check the maintenance schedule regularly for required services. Increased wear or damage to certain parts can result from failure to perform required services at the proper mileage intervals.

Setting mode

When the ignition switch is in “ON” position or the ignition mode is “ON” and the vehicle is stationary, you can enter the setting mode of the information display by pushing and holding the indicator selector knob (2) for more than 3 seconds.

- To select the setting that you want to change, turn the indicator selector knob (2) left or right.
- To change the setting, push the indicator selector knob (2).
- To exit the setting mode, select “Back” and push the indicator selector knob (2).

EXAMPLE

61MM0A161

NOTE:
The currently selected setting item is surrounded by a frame.

NOTE:
- *If you push and hold the indicator selector knob (2) to enter the setting mode when the display (D) shows average fuel consumption or average speed, the value will be reset simultaneously. If you do not want to reset the value, push the indicator selector knob quickly to switch the indication of the display.*
- *If you turn the ignition switch, press the engine switch or start to move the vehicle when the display is in the setting mode, the setting mode will be canceled automatically.*

Distance unit
(Odometer / trip meter distance unit setting)
You can change the units in which odometer / trip meter distance is displayed.

NOTE:
When you change the units in which odometer / trip meter distance is displayed, the trip meter will be reset automatically.

Fuel economy
(Fuel consumption unit setting)
You can change the units that fuel consumption is displayed in.

Language
You can change the language of the information display.

Fuel reset (Average fuel consumption reset setting)
You can change when the value of average fuel consumption is reset.

Temperature
(Temperature unit setting)
You can change the units that temperature is displayed in.

NOTE:
When you change the units that temperature is displayed in, the automatic heating and air conditioning system (if equipped) temperature display units will be changed automatically.

Set sensors
(Parking sensor setting) (if equipped)
The parking sensor can be switched between the normal mode and trailer mode.

Clock setting
- To change the hour indication, turn the indicator selector knob (2) left or right repeatedly when the hour indication appears as reversed color. To change the hour indication quickly, turn and hold the indicator selector knob (2). To set the hour indication, push the indicator selector knob (2) and the minute indication appears as reversed color.
- To change the minute indication, turn the indicator selector knob (2) left or right repeatedly when the minute indication appears as reversed color. To change the minute indication quickly, turn and hold the indicator selector knob (2). To set the minute indication, push the indicator selector knob (2).

You can also switch the time indication between 12-hour and 24-hour format.

NOTE:
When the clock on the information display is set, the clock in the instrument panel (if equipped) is set in accordance with the time of the clock on the information display.

Door lock (Door lock setting)
You can choose either once or twice operation(s) to unlock all doors (including the tailgate) or release the dead lock system (if equipped) by turning the key, or operating the keyless entry system transmitter, keyless push start system remote controller or request switch.

You can also turn off or on the buzzer sound when the door(s) is(are) locked or unlocked.

Lights (Light setting)
(Footwell light setting) (if equipped)
The footwell lights can be programmed for interlocked operation with either lighting control or door operation and for no lighting.

Lane change (Turn signal light setting)
The turn signal and its indicator can be set whether they flash three times even if you return the turn signal control lever immediately after moving it.

Antitheft (Theft deterrent alarm system setting) (if equipped)
You can switch the theft deterrent alarm system from the enabled state to the disabled state, and vice versa.
The state of the theft deterrent alarm system is shown on the information display as follows:
- Mode A: Disabled state
- Mode D: Enabled state

NOTE:
For the theft deterrent alarm system of Mexico and South Africa models, refer to "For European countries, Mexico and South Africa" in "SUPPLEMENT" section.

Oil change (Oil life monitoring system reset setting) (if equipped for gasoline engine model)
The oil life monitoring system must be reset after changing the engine oil and oil filter.

TPMS (Tire pressure monitoring system setting) (if equipped)
- You can check the current tire inflation pressure on the information display.
- You can set one of the initial values of tire pressure below that are indicated on the tire information label.
  – Comfort Mode
  – Eco Mode
  – Load Mode

Refer to "Tire pressure monitoring system (TPMS) (if equipped)" in "OPERATING YOUR VEHICLE" section for details.

IC AC (ENG A-STOP system setting) (if equipped)

- When using the automatic heating and air conditioning system (if equipped), you can select one of the following engine auto stop settings.
  – Standard
  – Economy
  – Comfort
- When “Economy” is selected, engine auto stop condition is eased, compared with “Standard”. Engine auto stop condition will occur more frequently, the stop time will be longer, leading to reduction of fuel consumption.
- When “Comfort” is selected, engine auto stop condition becomes severe, compared with “Standard”. Engine auto stop condition will occur less frequently, the stop time will be shorter, leading to more comfortable cabin condition by air conditioner.

Default (initialization setting)

If you select “YES” and push the indicator selector knob (2), all settings will be reinitialized.

Warning and indicator messages

The display shows warning and indicator messages to let you know about certain vehicle problems.
A tone may also sound to alert you.

If warning and indicator messages appear on the display, follow the messages.

Master warning indicator light

78K049

When the display shows warning and indicator messages, the master warning indicator light may also blink.

NOTE:

- *When the problem that causes a message to appear is corrected, the message will disappear.*
- *If a message is displayed, and other problems requiring a message occur, the message for each of the problems will be alternately displayed about every 5 seconds.*
- *When you push and hold the indicator selector knob (2) for about 2 seconds while a message is displayed, the message will disappear temporarily. If the problem that caused the message is not corrected, the message will appear again after 5 seconds.*

Warning and indicator messages

Warning and indicator message	Master warning indicator light	Sound	Cause and remedy
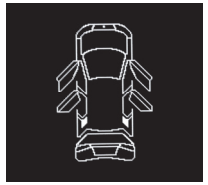 54P000262	Blinks (only while vehicle is in motion)	Beep (one time from interior buzzer; only while vehicle is in motion)	A door or tailgate is not properly closed. Stop the vehicle in a safe place and close the door or tailgate properly. (#1)
Keyless Push Start System 61MM0A163	Off	Off	This message is displayed when “ACC” position is selected as the power supply position. (#1)

(#1) This message will disappear for a while even if the problem that caused the message to appear is not corrected.

Warning and indicator message	Master warning indicator light	Sound	Cause and remedy
Keyless Push Start System 61MM0A164	Off	Off	The clutch pedal is depressed. Press the engine switch to start the engine.

Warning and indicator message	Master warning indicator light	Sound	Cause and remedy
Keyless Push Start System PRESS BRAKE AND CLUTCH TO START 61MM0A166	Off	Off	The engine switch is pressed without depressing the brake and clutch pedals. Try again as instructed by the message.

Warning and indicator message	Master warning indicator light	Sound	Cause and remedy
Keyless Push Start System 61MM0A168	Blinks 	Beep (one time from interior buzzer)	There is a problem with the steering lock system. Have your vehicle inspected by an authorized SUZUKI dealer.
Keyless Push Start System 61MM0A169	Blinks 	Beep (one time from interior buzzer)	There is a problem with the keyless push start system. Have your vehicle inspected by an authorized SUZUKI dealer.

Warning and indicator message	Master warning indicator light	Sound	Cause and remedy
Keyless Push Start System 61MM0A170 61MM0A171	Blinks 	Series of beeps under certain conditions (for about 2 seconds from exterior and/or interior buzzers)	The remote controller may be outside the vehicle or its battery may have become discharged. Locate the remote controller or touch the engine switch with the remote controller. If the message still appears, replace the remote controller battery.

Warning and indicator message	Master warning indicator light	Sound	Cause and remedy
LIGHTS ON 61MM0A172	Blinks	Continuous beep (from interior buzzer)	The headlights and/or the position lights are left on. Turn them off.
Keyless Push Start System ON IGNITION SWITCH POSITION 61MM0A173	Off	Off	This message is displayed when “ON” position is selected as the power supply position. (#1)

(#1) This message will disappear for a while even if the problem that caused the message to appear is not corrected.

Warning and indicator message	Master warning indicator light	Sound	Cause and remedy
LOW FUEL 61MM0A174	Off	Beep (one time from interior buzzer)	Fuel is low. Refill it immediately. (#1)
Keyless Push Start System TRN. STEERING WHEEL TO RELEASE LOCK 61MM0A175	Blinks	Beep (one time from interior buzzer)	The steering lock is not disengaged. While lightly turning the steering wheel in both directions, press the engine switch again.

(#1) This message will disappear for a while even if the problem that caused the message to appear is not corrected.

Warning and indicator message	Master warning indicator light	Sound	Cause and remedy
ICE POSSIBLE DRIVE WITH CARE 54P000258	Off	Off	The road may be icy. Drive very carefully. (#1)

(#1) This message will disappear for a while even if the problem that caused the message to appear is not corrected.

Warning and indicator message	Master warning indicator light	Sound	Cause and remedy
Keyless Push Start System KEY FOB LOW BATTERY 61MM0A177	Off	Off	The remote controller battery is about to become flat. Replace the battery. (#1)
Diesel Engine Models WARNING WATERINFUEL SYSTEM 61MM0A225	Blinks	Beep (one time from interior buzzer)	There may be a problem with the fuel filter. Have your vehicle inspected by an authorized SUZUKI dealer.

(#1) This message will disappear for a while even if the problem that caused the message to appear is not corrected.

Warning and indicator message	Master warning indicator light	Sound	Cause and remedy
Diesel Engine Models REMOVE WATER FROM FUEL 61MM0A226	Blinks	Beep (one time from interior buzzer)	It is possible that water may be in the fuel filter. Have your vehicle inspected by an authorized SUZUKI dealer.
OIL CHANGE ENGINE OIL 61MM0A224	Blinks	Beep (one time from interior buzzer)	Change the engine oil and oil filter immediately. The oil life monitoring system must be reset after changing the engine oil and oil filter. Refer to “Oil change request light” in this section.

Warning and indicator message	Master warning indicator light	Sound	Cause and remedy
Diesel Engine Models 61MM0A223	Blinks 	Beep (one time from interior buzzer)	There may be a problem with the diesel particulate filter. Have your vehicle inspected by an authorized SUZUKI dealer.
Diesel Engine Models 61MM0A222	Blinks 	Beep (one time from interior buzzer)	You should regenerate the DPF®. Refer to “Diesel particulate filter (DPF®) (For diesel engine model)” in “OPERATING YOUR VEHICLE” section.

Warning and indicator message	Master warning indicator light	Sound	Cause and remedy
ESP® ESP SERVICE ESP SYSTEM 61MM0A178	Blinks	Beep (one time from interior buzzer)	There may be a problem with ESP® system. Have your vehicle inspected by an authorized SUZUKI dealer.
Hill Hold Control System ESP HILL HOLD DISABLE 61MM0A179	Blinks	Beep (one time from interior buzzer)	There may be a problem with hill descent control system (if equipped) and hill hold control system. Have your vehicle inspected by an authorized SUZUKI dealer.

Warning and indicator message	Master warning indicator light	Sound	Cause and remedy
BCM SERVICE BCM SYSTEM 61MM0A180	Blinks	Beep (one time from interior buzzer)	If this message is displayed, have your vehicle inspected by an authorized SUZUKI dealer.

NOTE:

- *When you operate the four-mode 4WD system (if equipped), the information display may show messages other than those in the above chart. Refer to "Four-mode 4WD system (if equipped)" in "OPERATING YOUR VEHICLE" section for details.*
- *If your vehicle is equipped with a parking sensor system, the information display also indicates warning and indicator messages related to the system. For information on these messages, refer to "Parking sensors (if equipped)" in "OPERATING YOUR VEHICLE" section.*
- *If your vehicle is equipped with the radar brake support system, the information display also indicates warning and indicator messages related to the system. For information on these messages, refer to "Radar brake support system (if equipped)" in "OPERATING YOUR VEHICLE" section.*
- *If your vehicle is equipped with the adaptive cruise control system, the information display also indicates warning and indicator messages related to the system. For information on these messages, refer to "Adaptive cruise control system (if equipped)" in "OPERATING YOUR VEHICLE" section.*

Warning and indicator lights

NOTE:
If warning and indicator lights blink or come on, the corresponding messages may be shown on the information display.

Low tire pressure warning light (if equipped)

52D305

As an added fuel efficiency feature, your vehicle is equipped with a tire pressure monitoring system (TPMS) that uses a low tire pressure warning light to inform you when one or more of your tires is significantly under-inflated.

When the ignition switch is turned to “ON” position or the engine switch is pressed to change the ignition mode to “ON”, this light comes on briefly so you can check that the light is working.

When the low tire pressure warning light is lit, one or more of your tires is significantly under-inflated. You should stop and check your tires as soon as possible, and inflate them to the proper pressure as indicated on the vehicle’s tire information placard. Driving on a significantly under-inflated tire causes the tire to overheat and can lead to tire failure. Under-inflation also reduces fuel efficiency and tire tread life, and may affect the vehicle’s handling and stopping ability. Each tire, including the spare, should be checked at least once a month when cold and set to the recommended inflation pressure as specified in the vehicle placard.

The low tire pressure warning light is also used to inform you of a TPMS malfunction. When the system detects a malfunction, this light will blink for about 75 seconds and then remain continuously illuminated. This sequence will be repeated after the ignition switch is turned to “ON” position or the engine switch is pressed to change the ignition mode to “ON” as long as the malfunction exists.

NOTE:
The low tire pressure warning light may not come on immediately if you have a sudden loss of air pressure.

⚠ WARNING

Failure to take corrective action when the low tire pressure warning light is not working or when it comes on and blinks while driving can lead to an accident.

If the low tire pressure warning light does not come on for 2 seconds after the ignition switch is turned to “ON” position or the engine switch is pressed to change the ignition mode to “ON”, or comes on and blinks while driving, have your vehicle inspected by an authorized SUZUKI dealer. Even if the light turns off after blinking, indicating that the monitoring system has recovered, you should still have the system checked by your authorized SUZUKI dealer.

⚠ WARNING

The load-carrying capacity of your tires is reduced at lower inflation pressures. If your tires are even moderately under-inflated, the load on the tires may exceed the load-carrying capacity of the tires, which could lead to tire failure. The low tire pressure warning light will not alert you to this condition, because it only comes on when one or more of your tires becomes significantly under-inflated.

Check and adjust your tire inflation pressure at least once a month. Refer to "Tires" in "INSPECTION AND MAINTENANCE" section.

⚠ WARNING

Continuing to drive with the low tire pressure warning light on can lead to an accident, resulting in severe injury or death.

If the low tire pressure warning light comes on and stays on, reduce your speed and avoid abrupt steering and braking. Be aware that driving on a significantly under-inflated tire can cause the tire to overheat and can lead to tire failure, and may affect steering control and brake effectiveness. Stop the vehicle in a safe place as soon as possible and check your tires.

- **If you have a flat tire, replace it with the spare tire (if equipped). Refer to "Jacking instructions" in "EMERGENCY SERVICE" section for the tire replacement method. Also refer to "Replacing tires and/or wheels" for instructions on how to restore normal operation of the TPMS after you have had a flat tire.**

(Continued)

⚠ WARNING

(Continued)

- **If your vehicle is equipped with a flat tire repair kit instead of a spare tire, refer to "Flat tire repair kit (if equipped)" in "EMERGENCY SERVICE" section for instructions on how to perform an emergency repair of a flat tire.**
- **If one or more of your tires is under-inflated, adjust the inflation pressure of all tires to the recommended inflation pressure as soon as possible.**

Refer to "Tire pressure monitoring system (TPMS) (if equipped)" in "OPERATING YOUR VEHICLE" section for additional details on the tire pressure monitoring system. Refer to "Tires" in "INSPECTION AND MAINTENANCE" section for information on maintaining proper tire pressure.

Brake system warning light

65D477

Three different types of operations exist depending on the vehicle's specification.

- The light comes on briefly when the ignition switch is turned to "ON" position or the engine switch is pressed to change the ignition mode to "ON".
- The light comes on when the parking brake is engaged with the ignition switch in "ON" position or the ignition mode is "ON".
- The light comes on under either or both of above two conditions.

The light also comes on when the fluid in the brake fluid reservoir falls below the specified level.

The light should go out after starting the engine and fully releasing the parking brake, if the fluid level in the brake fluid reservoir is adequate.

The light also comes on together with the ABS warning light when the rear brake force control function (proportioning valve function) of the ABS system fails.

If the brake system warning light comes on while you are driving the vehicle, it may mean that there is something wrong with the vehicle's brake system.
If this happens:

1) Pull off the road and stop carefully.

⚠ WARNING

Remember that stopping distance may be longer, you may have to push harder on the pedal, and the pedal may go down farther than normal.

2) Test the brakes by carefully starting and stopping the vehicle on the shoulder of the road.
3) If you determine that it is safe, drive the vehicle cautiously at low speed to the nearest dealer for repairs or tow the vehicle to the nearest dealer for repairs.

⚠ WARNING

If any of the following conditions occur, you should immediately ask your SUZUKI dealer to inspect the brake system.

- **If the brake system warning light does not go out after the engine has been started and the parking brake has been fully released.**
- **If the brake system warning light does not come on when the ignition switch is turned to "ON" position or the engine switch is pressed to change the ignition mode to "ON".**
- **If the brake system warning light comes on at any time during vehicle operation.**

NOTE:
Because the brake system is self-adjusting, the fluid level will drop as the brake pads become worn. Replenishing the brake fluid reservoir is considered normal periodic maintenance.

NOTE:
Parking brake reminder buzzer
A buzzer sounds intermittently to remind you to release the parking brake if you start the vehicle without releasing the parking brake. Check that the parking brake is fully released and the brake system warning light turns off.

Anti-lock brake system (ABS) warning light

65D529

When the ignition switch is turned to “ON” position or the engine switch is pressed to change the ignition mode to “ON”, this light comes on briefly so you can check that the light is working.
If the light stays on or comes on when driving, there may be something wrong with the ABS.

If this happens:
1) Pull off the road and stop carefully.
2) Turn the ignition switch to “LOCK” or change the ignition mode to “LOCK” (OFF) by pressing the engine switch and then start the engine again.

If the warning light comes on briefly and then turns off, the system is normal. If the warning light still stays on, something is wrong with the system.

If the light and the brake system warning light stay on or come on simultaneously when driving, your ABS system is equipped with the rear brake force control function (proportioning valve function) and there may be something wrong with both the rear brake force control function and the anti-lock function of the ABS system.

If one of the above occurs, have the system inspected by your SUZUKI dealer.
If the ABS becomes inoperative, the brake system will function as an ordinary brake system that does not have this ABS system.

For details of ABS system, refer to “Anti-lock brake system (ABS)” in “OPERATING YOUR VEHICLE” section.

ESP® warning light

52KM133

ESP® is a registered trademark of Daimler AG.

This light blinks 5 times per second when one of the following systems is activated.
- Stability control system
- Traction control system
- Hill descent control system (if equipped)

If this light blinks, drive carefully.

When the ignition switch is turned to “ON” position or the engine switch is pressed to change the ignition mode to “ON”, the light comes on briefly so you can check that the light is working. If the light stays on or comes on when driving, there may be something wrong with the ESP® systems (other than ABS). You should have the system inspected by an authorized SUZUKI dealer.

For details of the ESP® systems, refer to “Electronic stability program (ESP®)” in “OPERATING YOUR VEHICLE” section.

⚠ WARNING

The ESP® systems cannot prevent accidents. Always drive carefully.

ESP® OFF indicator light

57L30045

When the ignition switch is turned to “ON” position or the engine switch is pressed to change the ignition mode to “ON”, this light comes on briefly so you can check that the light is working.

When the ESP® OFF switch is pushed to turn off the ESP® systems (other than ABS), the ESP® OFF indicator light comes on and stays on.

For details of the ESP® systems, refer to “Electronic stability program (ESP®)” in “OPERATING YOUR VEHICLE” section.

Hill descent control indicator light (if equipped)

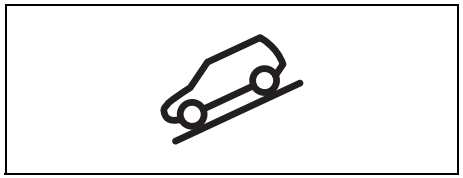

79K050

When the ignition switch is turned to “ON” position or the engine switch is pressed to change the ignition mode to “ON”, this light comes on briefly so you can check that the light is working.

When you push the hill descent control switch and the hill descent control operating conditions are fulfilled, the hill descent control indicator comes on. If the hill descent control indicator blinks, the hill descent control will not be activated.

For details of the hill descent control system, refer to “Hill descent control system (if equipped)” in “OPERATING YOUR VEHICLE” section.

Oil pressure light

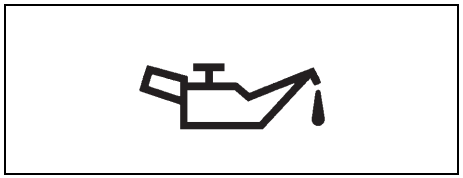

50G051

When the ignition switch is turned to “ON” position or the engine switch is pressed to change the ignition mode to “ON”, this light comes on. When the engine is started, the light goes out. The light will come on and remain on if there is insufficient oil pressure. If the light comes on when driving, pull off the road as soon as you can and stop the engine.
Check the oil level and add oil if necessary. If there is enough oil, the lubrication system should be inspected by your SUZUKI dealer before you drive the vehicle again.

NOTICE

- **If you operate the engine with this light on, severe engine damage can result.**
- **Do not rely on the oil pressure light to indicate the need to add oil. Periodically check the engine oil level.**

Charging light

50G052

When the ignition switch is turned to “ON” position or the engine switch is pressed to change the ignition mode to “ON”, this light comes on. When the engine is started, the light goes out. The light will come on and remain on if there is something wrong with the battery charging system. If the light comes on when the engine is running, the charging system should be inspected immediately by your SUZUKI dealer.

Driver’s seat belt reminder light / Front passenger’s seat belt reminder light (if equipped)

60G049

When the driver or front passenger does not buckle his or her seat belt, this light will come on and/or blink.
For details of the seat belt reminder, refer to “Seat belts and child restraint systems” in this section.

AIR BAG light

63J030

When the ignition switch is turned to “ON” position or the engine switch is pressed to change the ignition mode to “ON”, this light blinks or comes on for several seconds so you can check that the light is working.

The light will come on and stay on if there is a problem in the air bag system or the seat belt pretensioner system.

⚠ WARNING

If AIR BAG light does not blink or come on briefly when the ignition switch is turned to “ON” position or the engine switch is pressed to change the ignition mode to “ON”, stays on for more than 10 seconds, or comes on while driving, the air bag system or the seat belt pretensioner system may not work properly. Have both systems inspected by an authorized SUZUKI dealer.

Malfunction indicator light

65D530

Your vehicle has a computer-controlled emission control system. A malfunction indicator light is provided on the instrument cluster to indicate when it is necessary to have the emission control system serviced. When the ignition switch is turned to “ON” position or the engine switch is pressed to change the ignition mode to “ON”, this light comes on. When the engine is started, the light goes out.

If the malfunction indicator light comes on or blinks when the engine is running, there is a damage in the emission control system.
Bring the vehicle to your SUZUKI dealer to have the damage fixed.

(For EU specification vehicle)
Also, if this light comes on when the engine is running, there is a problem with the continuously variable transaxle system. Ask your SUZUKI dealer to have the system inspected.

NOTICE

Continuing to drive the vehicle when the malfunction indicator light is on or blinking can cause permanent damage to the vehicle’s emission control system, and can affect fuel economy and driveability.

Immobilizer/keyless push start system warning light

80JM122

When the ignition switch is turned to “ON” position or the engine switch is pressed to change the ignition mode to “ON”, this light comes on briefly so you can check that the light is working. If this light stays on, there is a problem with the system.

Open door warning light

54G391

This light remains on until all doors (including the tailgate) are completely closed.

If any door (including the tailgate) is open when the vehicle is moving, a ding sounds to remind you to close all doors completely.

Low fuel warning light

54G343

If this light comes on, fill the fuel tank immediately.

When this light comes on, a ding sounds once to remind you to fill the fuel.
If you do not fill the fuel, a ding sounds every time when the ignition switch is turned to “ON” position or the engine switch is pressed to change the ignition mode to “ON”.

NOTE:
The activation point of this light varies depending on road conditions (for example, slope or curve) and driving conditions because of fuel moving in the tank.

Electric power steering light

79J039

When the ignition switch is turned to “ON” position or the engine switch is pressed to change the ignition mode to “ON”, this light comes on. When the engine is started, the light goes out.

If this light comes on while driving, the power steering system may not work properly. Have the system inspected by your SUZUKI dealer.

NOTE:
The following steering wheel operations may gradually take more effort while parking or driving at a very low speed. This is not a malfunction of the steering system, but the power steering control system limits the power assist in order to prevent it from overheating.

- *The steering wheel is operated very often.*
- *The steering wheel is kept in a fully turned position for a long while.*

When the power steering control system cools down, the power steering system will return to its original condition.

However, repeating these operations could cause damage to the power steering system.

NOTE:
If the power steering system does not work properly, it will require greater effort to steer, but you still will be able to steer.

NOTE:
If the steering is operated, you may hear noise caused by electric power steering operation. This is normal and indicates that the power steering system works properly.

Radar brake support system indicator light (if equipped)

54P000255

When the ignition switch is turned to “ON” position or the engine switch is pressed to change the ignition mode to “ON”, this light comes on briefly so you can check that the light is working.

When the brake support system is activated, this light blinks rapidly.

In the following situations, this light will come on and the radar brake support system will stop functioning when the ignition switch is in “ON” position or the ignition mode is “ON”.

- When there is a problem with the radar brake support system. In this case, you should have the system inspected by an authorized SUZUKI dealer.
- When dirt is detected on the surface of the radar sensor cover. In this case, clean the cover.
- When there is a problem with the ABS or ESP®. The ABS warning light or the ESP® warning light will also come on.
- When there is a problem with the brake control systems.

For details, refer to “Radar brake support system (if equipped)” in “OPERATING YOUR VEHICLE” section.

Radar brake support system OFF indicator light (if equipped)

54P000254

When the ignition switch is turned to “ON” position or the engine switch is pressed to change the ignition mode to “ON”, this light comes on briefly so you can check that the light is working.

In the following situations, this light will come on and the radar brake support system will stop functioning when the ignition switch is in “ON” position or the ignition mode is “ON”.

- When the radar brake support OFF switch is pushed and held to turn off the radar brake support system.
- When the ESP® OFF switch is pushed to turn off the ESP® systems (other than ABS), the ESP® OFF indicator light will also come on.

For details, refer to “Radar brake support system (if equipped)” in “OPERATING YOUR VEHICLE” section.

Adaptive cruise control system warning light (if equipped)

54P000233

When the ignition switch is turned to “ON” position or the engine switch is pressed to change the ignition mode to “ON”, this light comes on briefly so you can check that the light is working.

If this light stays on, there is a problem with the adaptive cruise control system. Have the system inspected by your SUZUKI dealer.

Automatic headlight leveling system warning light (if equipped)

64J046

When the ignition switch is turned to “ON” position or the engine switch is pressed to change the ignition mode to “ON”, this light comes on briefly so you can check that the light is working.

If this light comes on, there is a problem with the automatic headlight leveling system. Bring the vehicle to your SUZUKI dealer to have the problem corrected.

Rear fog light indicator light (if equipped)

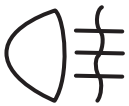

54G491

The rear fog light indicator light comes on when the rear fog light operates.

LED headlight warning light (if equipped)

54P000234

When the ignition switch is turned to “ON” position or the engine switch is pressed to change the ignition mode to “ON”, this light comes on briefly so you can check that the light is working.

If this light comes on, there is a problem with the LED headlight. Park the vehicle in a safe place and consult your SUZUKI dealer to have the problem corrected.

Turn signal indicators

50G055

When you turn on the left or right turn signals, the corresponding green arrow on the instrument cluster will flash along with the respective turn signal lights. When you turn on the hazard warning switch, both arrows will flash along with all of the turn signal lights.

Main beam (high beam) indicator light

50G056

This indicator comes on when headlight main beams (high beams) are turned on.

Illumination indicator light

64J045

This indicator light comes on while the position lights, tail light and/or the headlights are on.

4WD warning light (if equipped)

57L30042

When the ignition switch is turned to “ON” position or the engine switch is pressed to change the ignition mode to “ON”, this light comes on briefly so you can check that the light is working.

- This light comes on if there is any problem with the four-mode 4WD system. The system will be deactivated automatically.
- The light blinks if the vehicle is in either of the following conditions, and the system will be deactivated automatically.
  - Wheels of different diameters are fitted to the vehicle.
  - Drive train components overheat as a result of spinning of a drive wheel in mud or snow.

NOTE:
Should the light blink, immediately move the vehicle to a safe place and park it there to protect the drive train components. If you let the engine run at idle for a while except for the case of different sized wheels are fitted, the light will go out and the system will resume.

Oil change request light (if equipped)

79JM007

Your vehicle has the oil life monitoring system and related oil change request light that alerts you to change the engine oil and oil filter.
When this light comes on or blinks, change engine oil and oil filter immediately.
For details on how to change the engine oil and oil filter, refer to “Changing engine oil and filter” in “INSPECTION AND MAINTENANCE” section.
Gasoline engine model and diesel engine model have different lighting methods for oil change request light. Check an appropriate method from the following descriptions, according to your vehicle model.

(For gasoline engine model)
This light comes on for several seconds when the ignition switch is turned to “ON” position or the engine switch is pressed to change the ignition mode to “ON” so you can check that light is working.

If either of odometer reading or time is reached to the value which is set by the system, this light blinks when the ignition switch or engine switch is in “ON” position. In addition, the message is shown on the information display to tell you it is necessary to change the engine oil and oil filter. When the engine oil and oil filter are changed, and the oil life monitoring system is reset, this light will go out.

Whenever the engine oil and oil filter are changed, the light must be reset to monitor the next oil change timing properly. The light will go out after the reset. For the resetting procedure, refer to “Information display” in this section.

NOTICE

Severe engine damage will result, if you keep operating the engine after this light comes on.
Change the engine oil and oil filter immediately when the light blinks.

NOTE:
This light is used to facilitate the oil and oil filter change according to the maintenance schedule.

(For diesel engine model)
This light comes on for several seconds when the ignition switch is turned to “ON” position or the engine switch is pressed to change the ignition mode to “ON” so you can check that light is working.

If this light blinks when the engine is running, you should change the engine oil and oil filter immediately since the monitoring system has calculated that oil life has been diminished by a deterioration of engine oil. When the engine oil and oil filter are changed, and the oil life monitoring system is reset, this light will go out.

Whenever the engine oil and oil filter are changed, the light must be reset to monitor the next oil change timing properly. To reset the light, consult your SUZUKI dealer.

NOTICE

Severe engine damage will result, if you keep operating the engine after this light blinks.
Change the engine oil and oil filter immediately when the light blinks.

NOTE:
- *Note that engine oil degrades faster under the following conditions:*
  - *Mainly urban use of the vehicle, requiring more frequent regeneration of the DPF®;*
  - *Use of the vehicle for short drives, in which the engine does not have time to reach its regular operating temperature;*
  - *Repeated interruptions to the regeneration process signaled by the DPF® warning light coming on.*
- *Since special procedures and tools are required, ask your authorized SUZUKI dealer to reset the oil life monitoring system for diesel engine.*

Glow plug indicator light (for diesel engine model)

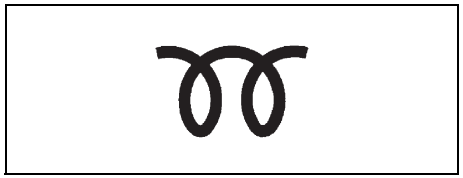

60A543

If the coolant temperature is cool enough, this light comes on when the ignition switch is turned to “ON” position or the engine switch is pressed to change the ignition mode to “ON” and goes out when the glow plug is heated enough for engine starting.

Fuel filter warning light (for diesel engine model)

60A541

When the ignition switch is turned to “ON” position or the engine switch is pressed to change the ignition mode to “ON”, this light comes on for several seconds so you can check that the light is working.
If the light comes on when driving, it is possible that water may be in the fuel filter. Drain water as soon as possible. Have your vehicle inspected by an authorized SUZUKI dealer.

Diesel particulate filter (DPF®) warning light (for diesel engine model)

64J244

When the ignition switch is turned to “ON” position or the engine switch is pressed to change the ignition mode to “ON”, this light comes on for several seconds so you can check that the light is working. If the light comes on when driving, the DPF® is nearly clogged. To turn off the warning light, the vehicle must stay in motion until regeneration has been completed.
The process normally takes about 25 minutes.
The optimum condition for ending the process are achieved by keeping the vehicle in motion at a speed of 50 km/h (31 mph) or higher, or an engine speed higher than 2,000 rpm.

If you drive your vehicle until the light goes out, the regeneration of the DPF® will be completed.

For details of the DPF®, refer to “Diesel particulate filter (DPF®) (For diesel engine model)” in “OPERATING YOUR VEHICLE” section.

NOTICE

Regenerate the DPF® when the DPF® warning light comes on.
Failure to regenerate the DPF® will cause the vehicle malfunction due to the clogged filter.

“ENG A-STOP” indicator light (if equipped)

72M00032

When the ignition switch is turned to “ON” position or the engine switch is pressed to change the ignition mode to “ON”, this light comes on briefly so you can check that the light is working.

When the engine is stopped by “ENG A-STOP” system, this light comes on.

For details, refer to “ENG A-STOP system (engine auto stop start system) (if equipped)” in “OPERATING YOUR VEHICLE” section.

“ENG A-STOP OFF” light (if equipped)

72M00159

When the ignition switch is turned to “ON” position or the engine switch is pressed to change the ignition mode to “ON”, this light comes on briefly so you can check that the light is working.

When you push “ENG A-STOP OFF” switch, this light comes on.

If this light blinks when driving, there may be something wrong with “ENG A-STOP” system. You should have the system inspected by an authorized SUZUKI dealer.

For details, refer to “ENG A-STOP system (engine auto stop start system) (if equipped)” in “OPERATING YOUR VEHICLE” section.

Master warning indicator light

78K049

When the information display shows warning and indicator messages, this indicator light may also blink.

For details, refer to “Information display” in this section.

Lighting control lever

57L21128

⚠ WARNING

To avoid possible injury, do not operate controls by reaching through the steering wheel.

Lighting operation

EXAMPLE

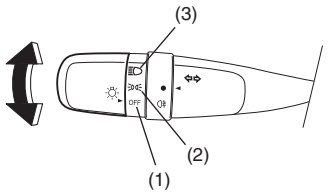

61MM0A072

To turn the lights on or off, twist the knob on the end of the lever. There are three positions:

OFF (1)
All lights are off.

(2)
Front position lights, tail lights, license plate light and instrument lights are on, but headlights are off.

(3)
Front position lights, tail lights, license plate light, instrument lights and headlights are on.

EXAMPLE

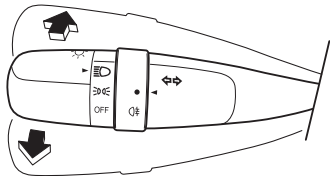

61MM0A073

With the headlights on, push the lever forward to switch to the high beams (main beams) or pull the lever toward you to switch to the low beams. When the high beams (main beams) are on, a light on the instrument cluster will come on. To momentarily activate the high beams (main beams) as a passing signal, pull the lever slightly toward you and release it when you have completed the signal.

Automatic light operation (if equipped)

EXAMPLE

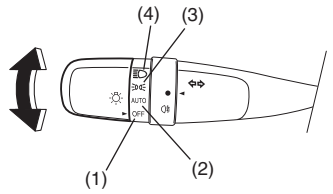

61MM0A074

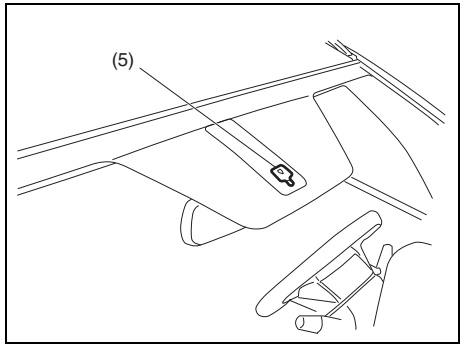

54P000235

Your vehicle's lighting system is controlled by two main systems: the lighting switch and the auto-on headlight system (when the lighting switch is in "AUTO" position).
The two systems work together to operate your lights as shown in the following chart:

ON: Lights ON
LIGHT: When it is light around the light sensor (5).
DARK: When it is dark around the light sensor (5).

Lighting switch position	Main lights to be operated	Ignition mode "LOCK" (OFF) or "ACC"		Ignition mode "ON"	
		LIGHT	DARK	LIGHT	DARK
(1) OFF	Position lights, Tail lights	–	–	–	–
	Headlights	–	–	–	–
(2) AUTO	Position lights, Tail lights	–	–	–	ON
	Headlights	–	–	–	ON
(3)	Position lights, Tail lights	ON	ON	ON	ON
	Headlights	–	–	–	–
(4)	Position lights, Tail lights	ON	ON	ON	ON
	Headlights	ON	ON	ON	ON

To turn the lights on or off, twist the knob on the end of the lever. There are four positions:

OFF (1)
All lights are off.

AUTO (2)
This function works when the ignition mode has been changed to “ON” by pressing the engine switch. The headlights and position lights are turned on and off automatically according to the amount of outside light detected by a sensor. They go out automatically when you change the ignition mode to “ACC” or “LOCK” by pressing the engine switch.

The light sensor (5) for sensing the amount of outside light is installed on the upper part of the windshield. It also serves as the rain sensor for the rain-sensing wipers.

⚠ CAUTION

If the light sensor area of the windshield is covered with mud, ice, or other similar substances, the headlights and position lights may be turned on even when it is still light outside. Before removing such substances from the windshield, always set the wiper control lever to “OFF” position. If the lever is left in “AUTO” position, the wipers could unexpectedly operate and cause injury, and could also be damaged.

NOTE:
- *Avoid covering the light sensor area of the windshield with a sticker. The sticker may impair the performance of the sensor and make the system unable to control operation of the lights correctly.*
- *If you changed the ignition mode to “ON” by pressing the engine switch and “AUTO” position remains selected, the headlights and position lights come on automatically as it gets dark outside, even with the engine not running. Leaving the lights lit for a long time may lead to a completely discharged battery.*

(3)
Front position lights, tail lights, license plate light and instrument lights are on, but headlights are off.

(4)
Front position lights, tail lights, license plate light, instrument lights and headlights are on.

EXAMPLE

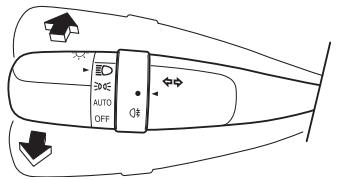

61MM0A075

With the headlights on, push the lever forward to switch to the high beams (main beams) or pull the lever toward you to switch to the low beams. When the high beams (main beams) are on, a light on the instrument cluster will come on. To momentarily activate the high beams (main beams) as a passing signal, pull the lever slightly toward you and release it when you have completed the signal.

Auto-on headlight system

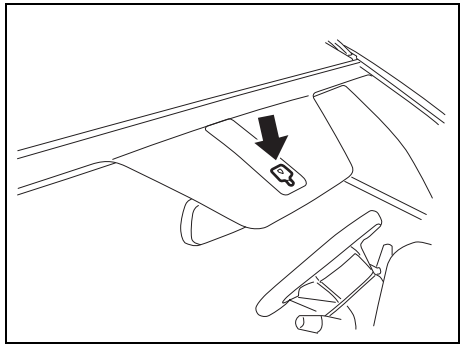

54P000236

The auto-on headlight system automatically turns on all lights that are operated by the lighting control lever on the steering column, when the following three conditions are all met.

Conditions for auto-on headlight system operation:
1) It is dark around the light sensor (5).
2) The lighting control lever is in “AUTO” position.
3) You press the engine switch to change the ignition mode to “ON”.

This system is operated by a signal from the light sensor (5) on the windshield. Do not cover the sensor (5). Otherwise, the system will not work correctly.

⚠ WARNING

It takes about 5 seconds for the light sensor to react to a change in lighting conditions. To help avoid an accident due to reduced visibility, turn on your headlights before driving into a tunnel, parking structure, etc.

NOTE:
The light sensor reacts even to infrared rays, so it may operate incorrectly when there are strong infrared rays.

Reprogramming the automatic light function
The following settings of the automatic light function can be customized to your preference. Please contact an authorized SUZUKI dealer if you want the function reprogrammed.

Sensitivity of the light sensor
The amount of outside light needed to turn the lights on and off is pre-set at the factory. The sensitivity of the light sensor can be adjusted so that the lights are turned on and off when it is:
- lighter outside than the pre-set condition, or
- darker outside than the pre-set condition

Rain-triggered automatic lighting operation
The setting of the auto-on headlight system can be changed to make it turn on the headlights:
- when the rain sensor senses heavy rainfall
- when the rain sensor senses light and heavy rainfall (in coordination with rain-sensing wiper operation), or
- independently from rain-sensing wiper operation.

Light reminder buzzer

The interior buzzer continuously beeps if you open the driver’s door without turning off the headlights and position lights. This function is triggered under the following condition:
The headlights and/or position lights are on even after the ignition switch is turned off, or the engine switch is pressed to change the ignition mode to “LOCK” (OFF).

The buzzer stops sounding when you turn off the headlights and position lights.

NOTE:
A message is indicated on the information display in the instrument cluster while the buzzer is sounding.

Daytime running light (D.R.L.) system (if equipped)

When the engine is started, this system turns on the daytime running lights.

Conditions for D.R.L. system operation
1) The engine is running.
2) Headlights and front fog light (if equipped) are off.

NOTE:
Brightness of the daytime running lights is different from the brightness of the position lights, but it is not a malfunction.

Rear fog light switch (if equipped)

EXAMPLE

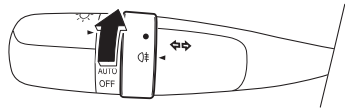

61MM0A214

To turn the rear fog light on, twist the knob as shown in the illustration with the headlights on. When the rear fog light is on, an indicator light on the instrument cluster will come on.

Front fog light switch (if equipped)

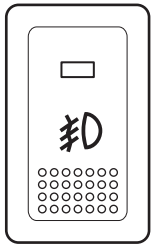

64J058

The front fog light comes on when the fog light switch is pushed in with the position lights, tail lights and/or the headlights on. An indicator light above the switch will be lit when the front fog light is on.

NOTE:
In some countries, the lighting operation may be different from the above description according to local regulations.

Headlight leveling switch (if equipped)

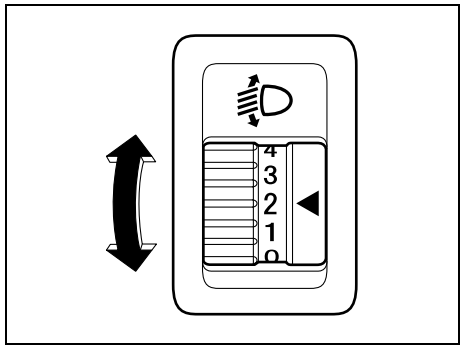

80JM040

Level the headlight beam according to the load condition of your vehicle by turning this switch. The chart below shows the appropriate switch position for different vehicle load conditions.

Vehicle Load Condition	Switch Position
Driver only	0
Driver + 1 passenger (in front seat)	0
Driver + 4 passengers, no cargo	2
Driver + 4 passengers, cargo added	3
Driver + full cargo	4

Turn signal control lever

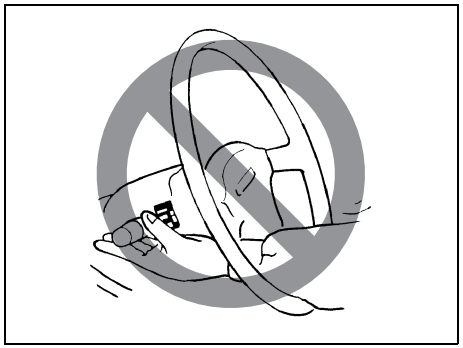

57L21128

⚠ WARNING

To avoid possible injury, do not operate controls by reaching through the steering wheel.

Turn signal operation

With the ignition switch in “ON” position or the ignition mode “ON”, move the lever upward or downward to activate the right or left turn signals.

Normal turn signal

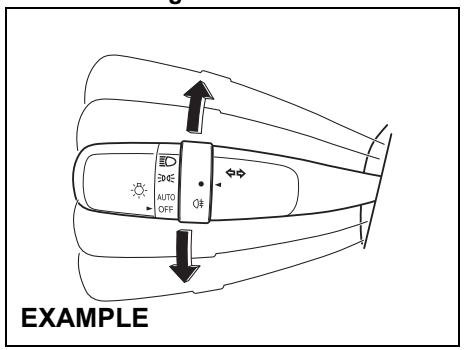

61MM0A076

Move the lever all the way upward or downward to signal. When the turn is completed, the signal will cancel and the lever will return to its normal position.

Lane change signal

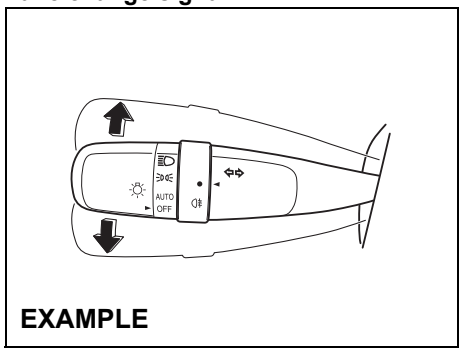

61MM0A077

Move the lever partway upward or downward to turn right or left and hold the lever in the moved position.

- The turn signal and its indicator flash while the lever is held at the moved position.

The turn signal and its indicator flash 3 times even if you return the lever immediately after moving it.

NOTE:
The turn signal and its indicator can be set whether they flash 3 times after the turn signal lever is returned via the information display. Refer to “Information display” in this section.

NOTE:
You can customize the setting for the number of flashing times of the turn signal and its indicator (1 to 4 times). Please ask an authorized SUZUKI dealer for the customization.

Hazard warning switch

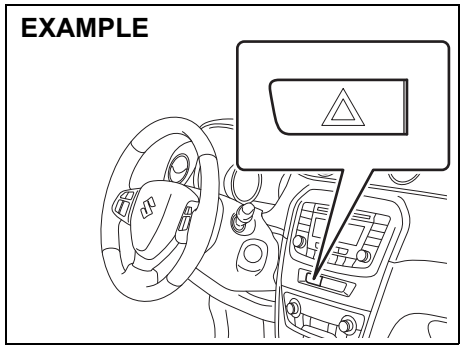

54P000242

Push in the hazard warning switch to activate the hazard warning lights. All turn signal lights and both turn signal indicators will flash simultaneously. To turn off the lights, push the switch again.
Use the hazard warning lights to warn other drivers of possible risk of traffic hazard when you park your vehicle in case of emergency.

Windshield wiper and washer lever

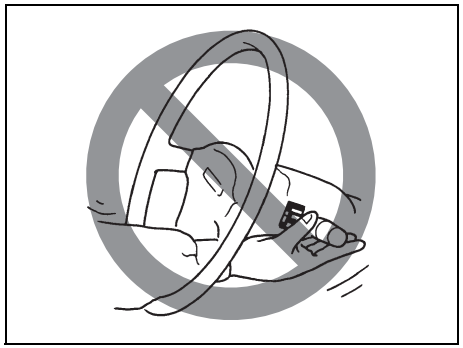

65D611

⚠ WARNING

To avoid possible injury, do not operate controls by reaching through the steering wheel.

Wiper and washer operation

When the ignition switch is in “ON” position or the ignition mode is “ON”, you can use the wiper/washer lever or switch (if equipped).

Windshield wipers

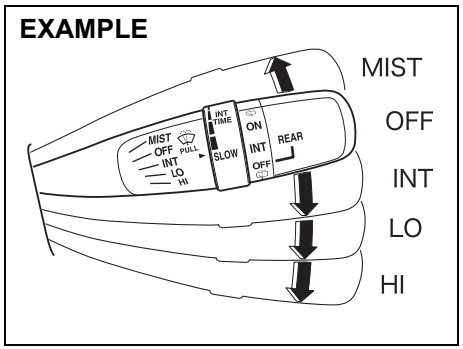

61MM0A079

To turn the windshield wipers on, move the lever down to one of the three operating positions. In “INT” position, the wipers operate intermittently. The “INT” position is very convenient for driving in mist or light rain. In “LO” position, the wipers operate at a steady low speed. In “HI” position, the wipers operate at a steady high speed. To turn off the wipers, move the lever back to “OFF” position.

Move the lever up and hold it to “MIST” position, the windshield wipers will turn on continuously at low speed.

EXAMPLE

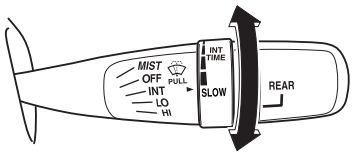

61MM0A080

If the lever is equipped with “INT TIME” control, turn the control forward or backward to adjust the intermittent wiper operation to the desired interval.

Windshield wipers with rain sensing function (if equipped)

EXAMPLE

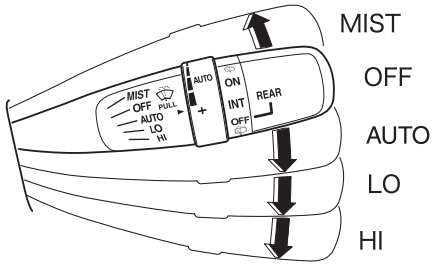

61MM0A081

Press the engine switch to change the ignition mode to “ON”. To turn the rain-sensing wipers on, move the lever down to one of the three operating positions. In “AUTO” position (if provided), the wipers automatically operate when the wiper system senses rain or snow. In “LO” position, the wipers operate at a steady low speed. In “HI” position, the wipers operate at a steady high speed. To turn off the wipers, move the lever back to “OFF” position.

Move the lever up and hold it to “MIST” position; the wipers will operate continuously at low speed for as long as you hold the lever in “MIST” position.

EXAMPLE

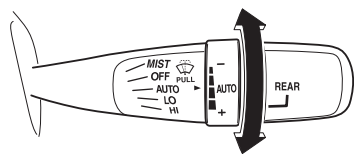

61MM0A082

If the control lever has on “AUTO” position, you can change the system’s sensitivity to rain/snow by turning the knob of the control lever increased sensitivity or backward for decreased sensitivity.

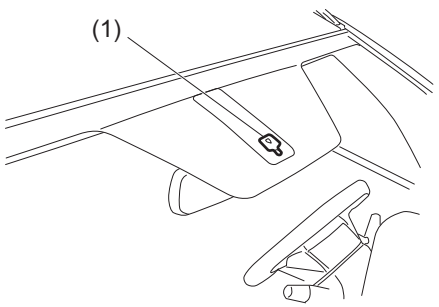

54P000243

(1) Rain sensor

⚠ CAUTION

- **Observe the following instructions when the wiper lever is set to "AUTO" position with the engine switch in "ON" mode. Otherwise, the wipers could unexpectedly operate and cause injury, and could also be damaged.**
  - **Do not touch or wipe the rain sensor area of the windshield with a cloth.**
  - **Do not hit the windshield or rain sensor.**
- **Set the wiper control lever to "OFF" position before washing the vehicle in an automatic car wash or cleaning the windshield.**

NOTE:

- *Under the following conditions, the rain sensor may not be able to sense rain or snow correctly, and thus the rain-sensing wiper function may not work or may work incorrectly. (Use a position other than "AUTO" under these conditions.)*
  - *Rain or snow does not hit the rain sensor area of the windshield, or the snow is not of a type that is able to be detected by the sensor.*
  - *The rain sensor area is covered with mud, ice or other similar substance. You should remove any foreign substance.*
  - *There were already raindrops on the windshield before starting rain-sensing wiper operation. You should remove the raindrops by operating the wipers under manual control.*
  - *The rain sensor is hotter than 80°C (176°F) in the sun or lower than –10°C (14°F) in freezing weather. (The wipers do not operate under this condition.)*
  - *The windshield is coated with a water-repellent substance, which causes raindrops to run down quickly. This will give a clearer view and the wipers may seem to operate too frequently. In this case, decrease the system's sensitivity.*
  - *The sensor area is covered with a sticker.*
  - *The wiper blades are damaged. You should replace them.*
- *The following conditions may indicate problems with the rain-sensing wiper system. If your system exhibits any of the following conditions, have it inspected by an authorized SUZUKI dealer.*
  - *Rainfall/snowfall rate varies but the wiping interval remains constant.*
  - *Rain/snow is falling but the wipers do not operate.*

Reprogramming the rain-sensing wiper function

"AUTO" position operation of the rain-sensing wiper function can be customized to your preference by reprogramming its setting as follows. Please contact an authorized SUZUKI dealer for this customization.

Full-automatic wiping (factory setting)

The system automatically selects the most appropriate of the following wiping modes: no wiping, intermittent wiping, low-speed wiping or high-speed wiping.

Semi-automatic wiping

The system automatically selects the most appropriate of the following wiping modes: intermittent wiping, low-speed wiping or high-speed wiping. (The wipers do not stop automatically.)

Intermittent wiping

The wipers operate only in the intermittent wiping mode. The wiping interval can be changed with the knob on the control lever.

Windshield washer

EXAMPLE

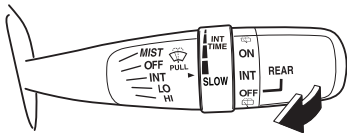

61MM0A099

To spray windshield washer fluid, pull the lever toward you. The windshield wipers will automatically turn on at low speed if they are not already on and your vehicle is equipped with “INT” position.

⚠ WARNING

- **To prevent windshield icing in cold weather, turn on the defroster to heat the windshield before and during windshield washer use.**
- **Do not use radiator antifreeze in the windshield washer reservoir. It can severely impair visibility when sprayed on the windshield, and can also damage your vehicle’s paint.**

NOTICE

To help prevent damage to the windshield wiper and washer system components, you should take the following precautions:

- **Do not continue to hold in the lever when there is no windshield washer fluid being sprayed or the washer motor can be damaged.**
- **Do not attempt to remove dirt from a dry windshield with the wipers or you can damage the windshield and the wiper blades. Always wet the windshield with washer fluid before operating the wipers.**
- **Clear ice or packed snow from the wiper blades before using the wipers.**
- **Check the washer fluid level regularly. Check it often when the weather is bad.**
- **Fill a reservoir 3/4 full with washer fluid to for its expansion, if temperature falls low enough to freeze the fluid.**

Rear window wiper/washer switch

EXAMPLE

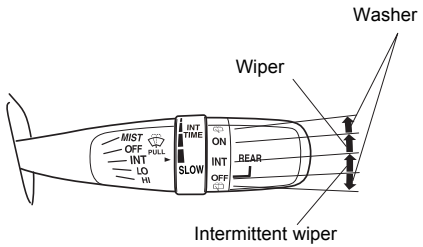

61MM0A100

To turn the rear wiper on, twist the rear wiper switch on the end of the lever forward to “ON” position. If your vehicle is equipped with “INT” position, the rear wiper operates intermittently when you twist the switch forward to “INT” position. To turn the rear wiper off, twist the switch rearward to “OFF” position.

With the rear wiper in “OFF” position, twist the switch rearward and hold it there to spray window washer fluid.

With the rear wiper in “ON” position, turn the switch forward and hold it there to spray window washer fluid.

NOTICE

Clear ice or snow from the rear window and rear wiper blade before using the rear wiper. Accumulated ice or snow could prevent the wiper blade from moving, causing damage to the wiper motor.

Tilt/telescoping steering lock lever

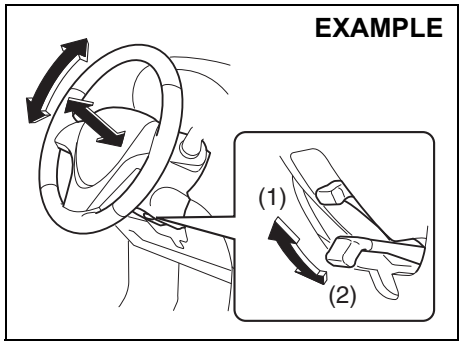

61MM0A085

(1) LOCK
(2) UNLOCK

The lock lever is located under the steering column. To adjust the steering wheel height and fore-aft position:

1) Push down the lock lever to unlock the steering column.
2) Adjust the steering wheel to the desired height and fore-aft position and lock the steering column by pulling up the lock lever.
3) Try moving the steering wheel up and down and back and forth to check that it is securely locked in position.

⚠ WARNING

Never attempt to adjust the steering wheel while the vehicle is moving or you could lose control of the vehicle.

Horn

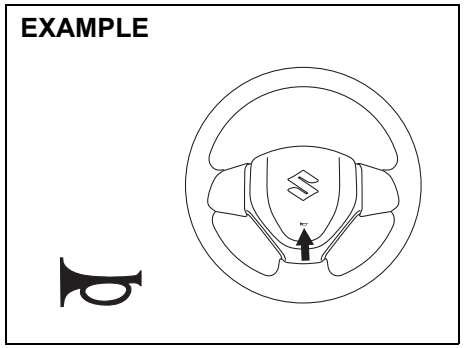

68LM240

Press the horn button of the steering wheel to sound the horn. The horn will sound with the ignition switch in any position or any ignition mode.

Heated rear window switch / heated outside rearview mirror switch (if equipped)

Type 1

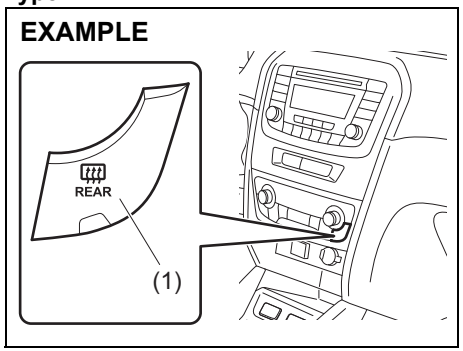

54P000244

Type 2

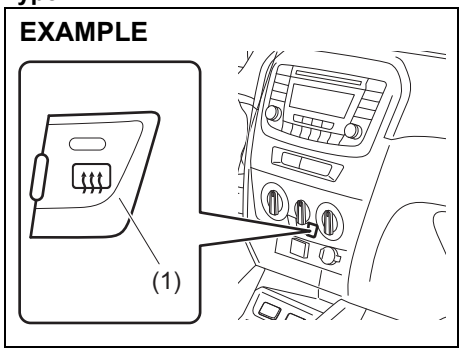

54P000245

When the rear window is misted, push this switch (1) to clear the window.

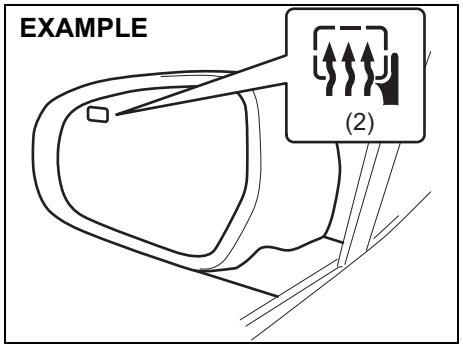

54P000246

If the outside rearview mirror has the mark (2), it is also equipped with the heated outside rearview mirrors. When you push the

switch (1), both the heated outside rearview mirrors and the heated rear window will operate simultaneously.

An indicator light will be lit when the defogger is on. The defogger will work only when the engine is running. To turn off the defogger, push the switch (1) again.

NOTICE
The heated rear window and the heated outside rearview mirrors (if equipped) use a large amount of electricity. Turn off the switch after the window and mirrors have become clear.

NOTE:
- *The defogger will work only when the engine is running.*
- *The defogger will automatically turn off after the defogger remains on for 15 minutes to prevent discharging of the battery.*
- *If your vehicle is equipped with heated outside rearview mirrors, only the driver's side outside rearview mirror has the mark (2), but both outside rearview mirrors work simultaneously.*

MEMO

OPERATING YOUR VEHICLE

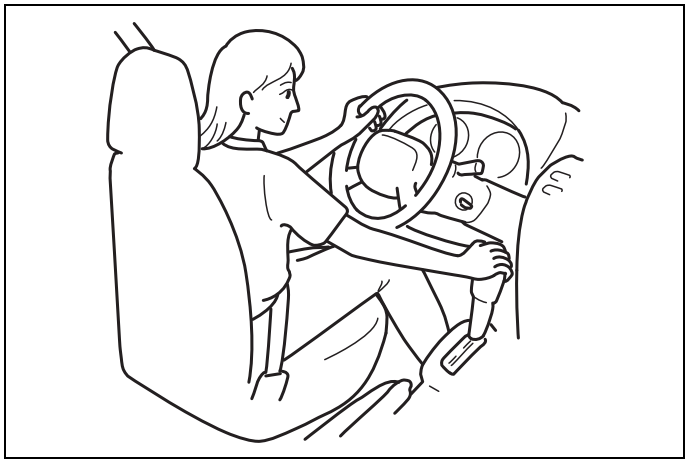

60G408

Exhaust gas warning 3-1
Daily inspection checklist 3-1
Engine oil consumption 3-2
Ignition switch
(vehicle without keyless push start system) 3-3
Engine switch
(vehicle with keyless push start system) 3-5
Keyless push start system (if equipped) 3-6
Parking brake lever 3-10
Pedal 3-11
Starting engine
(vehicle without keyless push start system) 3-12
Starting engine
(vehicle with keyless push start system) 3-14
Using transaxle 3-19
Gearshift indicator 3-21
Four-mode 4WD system (if equipped) 3-23
ENG A-STOP system
(engine auto stop start system) (if equipped) 3-29
Adaptive cruise control system (if equipped) 3-32
Cruise control (if equipped) 3-42
Speed limiter (if equipped) 3-45
Radar brake support system (if equipped) 3-47
Emergency stop signal (ESS) (if equipped) 3-63
Parking sensors (if equipped) 3-64
Rearview camera (if equipped) 3-71
Braking 3-74
Electronic stability program (ESP®) 3-76
Tire pressure monitoring system (TPMS) (if equipped) .. 3-83

Exhaust gas warning

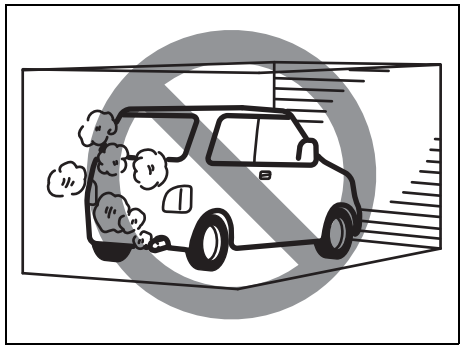

52D334

⚠ WARNING

Avoid breathing exhaust gases. Exhaust gases contain carbon monoxide, a potentially lethal gas that is colorless and odorless. Since carbon monoxide is difficult to detect by itself, take the following precautions to help prevent carbon monoxide from entering your vehicle.

- **Do not leave the engine running in garages or other confined areas.**

(Continued)

⚠ WARNING

(Continued)

- **Do not park with the engine running for a long period of time, even in an open area. If it is necessary to sit for a short time in a parked vehicle with the engine running, check that the air intake selector is set to "FRESH AIR" and the blower is at high speed.**
- **Avoid operating the vehicle with the tailgate or trunk open. If it is necessary to do so, check that the sunroof (if equipped) and all windows are closed, and the blower is at high speed with the air intake selector set to "FRESH AIR".**
- **To allow proper operation of your vehicle's ventilation system, keep the air inlet grill in front of the windshield clear of snow, leaves or other obstructions at all times.**
- **Keep the exhaust tailpipe area clear of snow and other material to help reduce the buildup of exhaust gases under the vehicle. This is particularly important when parked in blizzard conditions.**
- **Have the exhaust system inspected periodically for damage and leakage. Any damage or leakage should be repaired immediately.**

Daily inspection checklist

Before driving

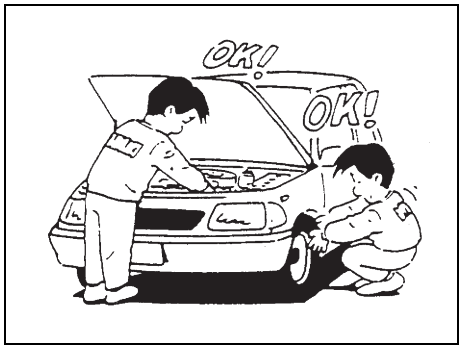

60A187S

1) Check that windows, mirrors, lights and reflectors are clean and unobstructed.
2) Visually check the tires for the following points:
   – the depth of the tread groove
   – abnormal wear, cracks and damage
   – loose wheel bolts
   – existence of foreign material such as nails, stones, etc.

Refer to "Tires" in "INSPECTION AND MAINTENANCE" section for details.

3) Look for fluid and oil leakage.

NOTE:
It is normal for water to drip from the air conditioning system after use.

4) Check that the hood is fully closed and latched.
5) Check the headlights, turn signal lights, brake lights and horn for proper operation.
6) Adjust the seat and head restraint.
7) Check the brake pedal and the parking brake lever.
8) Adjust the mirrors.
9) Check that you and all passengers have properly fastened your seat belts.
10) Check that all warning lights come on as the ignition switch is turned to “ON” position or the engine switch is pressed to change the ignition mode to “ON”.
11) Check all gauges.
12) Check that the brake system warning light turns off when the parking brake is released.

Once a week, or each time you fill your fuel tank, perform the following under-hood checks:

1) Engine oil level
2) Coolant level
3) Brake fluid level
4) Battery solution level
5) Windshield washer fluid level
6) Hood latch operation
   Pull the hood release handle inside the vehicle. Check that you cannot open the hood all the way without releasing the secondary latch. Close the hood securely after checking for proper latch operation. See the item “All latches, hinges and locks” of “Chassis, body and others” in “Maintenance schedule” in “INSPECTION AND MAINTENANCE” section for lubrication schedule.

⚠ WARNING

Check that the hood is fully closed and latched before driving. If it is not, it can fly up unexpectedly during driving, obstructing your view and resulting in an accident.

Once a month, or each time you fill your fuel tank, check the tire pressure using a tire pressure gauge. Also check the tire pressure of the spare tire.

Engine oil consumption

It is normal for the engine to consume some engine oil during normal vehicle operation.

The amount of engine oil consumption depends on viscosity and quality of the oil and your driving conditions.
More oil is consumed during high-speed driving and when there is frequent acceleration and deceleration. Under high loads, your engine also will consume more oil.
A new engine also consumes more oil, since its pistons, piston rings and cylinder walls have not yet become conditioned. New engines reach the normal level of oil consumption only after approximately 5000 km (3000 miles) driving.

Oil consumption:
Max. 1.0 L per 1000 km
(1 Qt. per 600 miles)

When judging the amount of oil consumption, note that the oil may become diluted and it is difficult to judge the accurate oil level.
As an example, if a vehicle is used for repeated short trips, and consumes a normal amount of oil, the dipstick may not show any drop in the oil level at all, even after 1000 km (600 miles) or more of driving. This is because the oil gradually becomes diluted with fuel or moisture,

making it appear that the oil level has not changed.
You should also be aware that the diluting ingredients evaporate out when the vehicle is subsequently driven at high speeds, such as on an expressway, making it appear that oil is excessively consumed after high-speed driving.

Ignition switch (vehicle without keyless push start system)

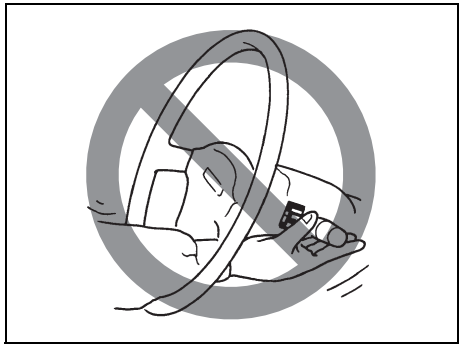

65D611

⚠ WARNING

To avoid possible injury, do not operate controls by reaching through the steering wheel.

EXAMPLE

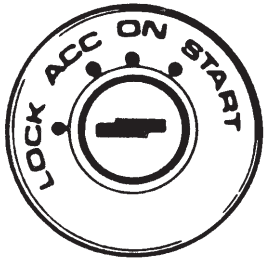

60B041

The ignition switch has the following four positions:

LOCK
This is the normal parking position. It is the only position in which the key can be removed.

Manual transaxle

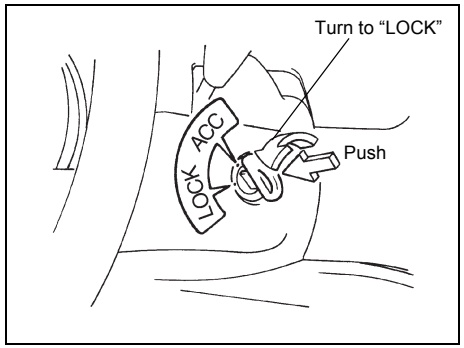

60G033

You must push in the key to turn it to “LOCK” position. It locks the ignition, and prevents normal use of the steering wheel after the key is removed.

To release the steering lock, insert the key and turn it clockwise to one of the other positions. If you have trouble turning the key to unlock the steering, try turning the steering wheel slightly to the right or left while turning the key.

ACC
Accessories such as the radio can operate, but the engine is off.

ON
This is the normal operating position. All electrical systems are on.

START
This is the position for starting the engine using the starter motor. The key should be released from this position as soon as the engine starts.

Ignition key reminder (if equipped)
A buzzer sounds intermittently to remind you to remove the ignition key if it is in the ignition switch when the driver’s door is opened.

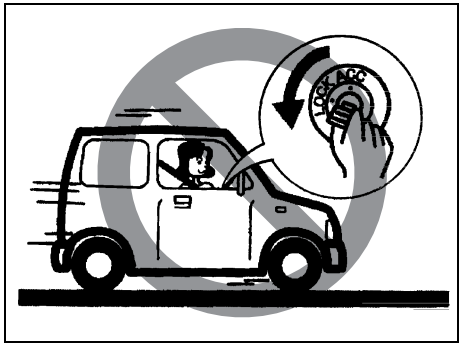

81A297S

⚠ WARNING

- **Never return the ignition switch to “LOCK” position and remove the ignition key while the vehicle is moving. The steering wheel will lock and you will not be able to steer the vehicle.**

(Continued)

⚠ WARNING

(Continued)

- **Always return the ignition switch to "LOCK" position and remove the ignition key when leaving the vehicle even only for a short time. Also do not leave children alone in a parked vehicle. Unattended children could cause accidental movement of the vehicle or could tamper with power windows or power sunroof. They also could suffer from heat stroke in warm or hot weather. These could result in severe injury or even death.**

NOTICE

- **Do not use the starter motor for more than 12 seconds at a time. If the engine does not start, wait 15 seconds before trying again. If the engine does not start after several attempts, check the fuel and ignition systems or consult your SUZUKI dealer.**
- **Do not leave the ignition switch in "ON" position if the engine is not running as the battery will discharge.**

Engine switch (vehicle with keyless push start system)

EXAMPLE

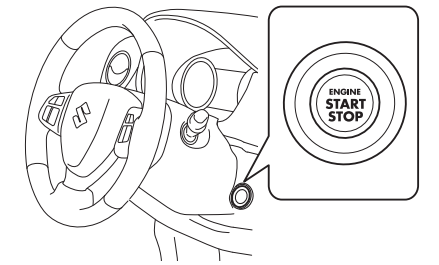

54P000301

LOCK (OFF)
This mode is for parking the vehicle. When this mode is selected by pressing the engine switch and then any door (including the tailgate) is opened or closed, the steering will be locked automatically.

ACC
Press the engine switch to select this ignition mode to use such electric equipment as the audio system, outside rearview mirrors and accessory socket with the engine off. When this position is selected, the information display in the instrument cluster shows the following message: "ACC" IGNITION SWITCH POSITION. Refer to "Information display" in "BEFORE DRIVING" section for details.

ON

- **With the engine off**
  You can use such electric equipment as the power windows and wipers with the engine off. When this ignition mode is selected by pressing the engine switch, the information display in the instrument cluster shows the following message: "ON" IGNITION SWITCH POSITION.
- **With the engine on**
  All electric equipment is operational. The vehicle can be driven when you have selected this ignition mode by pressing the engine switch.

START
Provided you have the keyless push start system remote controller with you, the engine automatically starts when you press the engine switch to select this ignition mode after shifting to "N" (Neutral) and depressing the brake and clutch pedals.

NOTE:
You do not need to keep the engine switch pressed to start the engine.

NOTICE

Do not leave the engine switch in "ACC" or "ON" mode when the engine is not running. Avoid using the radio or other electric accessories for a long time when the engine switch is in "ACC" or "ON" mode when the engine is not running, otherwise the battery may discharge.

NOTE:
In the presence of strong radio signals or noise, you may not be able to change the ignition mode to "ACC" or "ON" or to start the engine using the engine switch. In this case, the information display in the instrument cluster will show the following message: KEY FOB NOT DETECTED.

Unreleased steering lock warning

If the steering lock remains engaged when you press the engine switch to change the ignition mode to "ON", the information display in the instrument cluster shows the message: "TRN. STEERING WHEEL TO RELEASE LOCK". Refer to "Information display" in "BEFORE DRIVING" section for details.

NOTE:
The steering lock may not be released if some load is acting on the steering wheel. If this happens, turn the steering wheel to the right or left to relieve it from the load before you press the engine switch again to change to the desired ignition mode.

Keyless push start system (if equipped)

Provided the keyless push start system remote controller is within the interior workable area (refer to the related explanation in this section), you can use the engine switch for starting the engine and selecting an ignition mode ("ACC" or "ON"). In addition, the following functions can be used:

- Keyless entry function. Refer to "Keyless push start system remote controller / keyless entry system transmitter" in "BEFORE DRIVING" section for details.
- Locking and unlocking doors (including the tailgate) using a request switch. Refer to "Keyless push start system remote controller / keyless entry system transmitter" in "BEFORE DRIVING" section for details.
- Immobilizer (anti-theft) function. Refer to "Immobilizer system" in "BEFORE DRIVING" section for details.

Engine switch illumination

The engine switch is illuminated (lit) in the following situations:

- When the engine is off and the driver's door is open, or for 15 seconds after the driver's door is closed. The illumination will fade out after 15 seconds passed.

- When the engine is off and the position lights are on. The illumination will go out when the position lights are turned off.
- When the engine is on and the position lights and/or the headlights are on. The illumination will go out when the headlights are turned off.

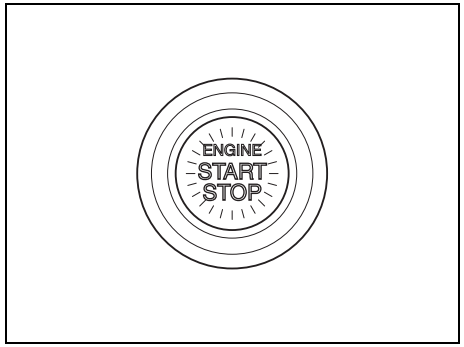

82K253

NOTE:
To save the battery, the illumination will be automatically turned off when both of the following conditions are simultaneously met:
- *The headlights and position lights are turned off.*
- *15 minutes has elapsed since opening the driver's door.*

Selection of ignition modes

Press the engine switch to select "ACC" or "ON" mode as follows when you use an electric accessory or check the operation of instruments without running the engine.

1) Bring the keyless push start system remote controller with you and sit in the driver's seat.
2) Without depressing the clutch pedal, press the engine switch (1).

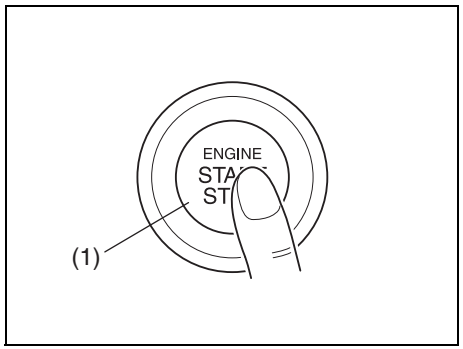

82K254

Every time you press the engine switch, the ignition mode changes as follows.

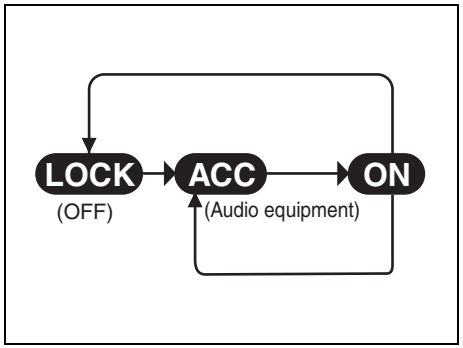

57L31033

NOTE:
When selecting the ignition modes, the information display in the instrument cluster shows certain messages. Refer to "Information display" in "BEFORE DRIVING" section for details.

If the master warning indicator light blinks and the ignition modes cannot be selected

Your keyless push start system remote controller may not be sensed as being within the interior workable area (refer to the related explanation in this section). Try again after checking that you have the remote controller with you. If the ignition modes still cannot be selected, the battery of the remote controller may be discharged. To select an ignition mode, you must then use the following method:

EXAMPLE

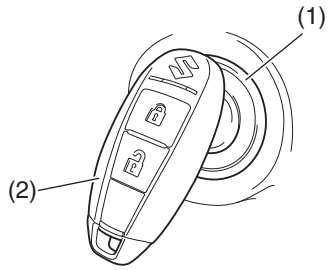

58MST0302

1) Without depressing the brake pedal and the clutch pedal, push the engine switch (1).
2) The master warning indicator light in the instrument cluster blinks and the message "PLACE KEY FOB ON START SWITCH" appears on the information display within about 10 seconds. Touch the engine switch with "LOCK" button of remote controller (2) for about 2 seconds.

NOTE:
- *If you still cannot select the ignition modes, there may be some problem with the keyless push start system. Contact an authorized SUZUKI dealer for an inspection of the system.*
- *The immobilizer/keyless push start system warning light will come on for about 5 seconds while the master warning indicator light is blinking. In addition, the information display in the instrument cluster will show a message during this time. Refer to "Information display" in "BEFORE DRIVING" section for details.*
- *You may customize the system to cause the interior buzzer to sound once for warning that remote controller is out of sensing range. To incorporate this customization, please contact an authorized SUZUKI dealer.*
- *If the battery of the remote controller is about to become completely discharged, the corresponding message will appear on the information display when you press the engine switch to change the ignition mode to "ON". Refer to "Information display" in "BEFORE DRIVING" section for details. For details on replacing the battery, refer to "Keyless push start system remote controller / keyless entry system transmitter" in "BEFORE DRIVING" section.*

REMOTE CONTROLLER OUTSIDE warning

When either of the conditions described below is met, the system issues a REMOTE CONTROLLER OUTSIDE warning by sounding the interior and exterior buzzers. At the same time, the immobilizer/keyless push start system warning light comes on and the master warning indicator light blinks.

- Any door is opened and then closed while the remote controller is not inside the vehicle and the engine is running or the ignition mode has been changed to “ACC” or “ON” by pressing the engine switch.
- The remote controller is not inside the vehicle when you attempt to start the engine after changing the ignition mode to “ACC” or “ON” by pressing the engine switch.

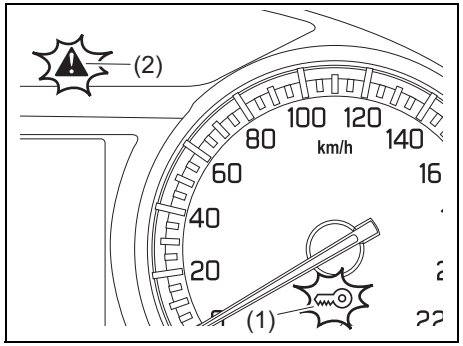

54P000302

(1) Immobilizer/keyless push start system warning light (blinks)
(2) Master warning indicator light (blinks)

NOTE:
- *If the warning is given, locate the remote controller as soon as possible.*
- *Any attempt to start the engine will fail while the warning is active. The message appearing on the information display in the instrument cluster will also indicate this condition. Refer to “Information display” in “BEFORE DRIVING” section for details.*
- *Normally, the immobilizer/keyless push start system warning light should go out and the master warning indicator light should stop blinking shortly after the remote controller is brought back inside the vehicle. If they remain lit and blinking, change the ignition mode to “LOCK” (OFF) by pressing the engine switch and then perform the engine starting operation. Refer to “Starting engine (vehicle with keyless push start system)” in this section.*
- *Always keep the remote controller with you as the driver.*

Interior workable area for engine starting

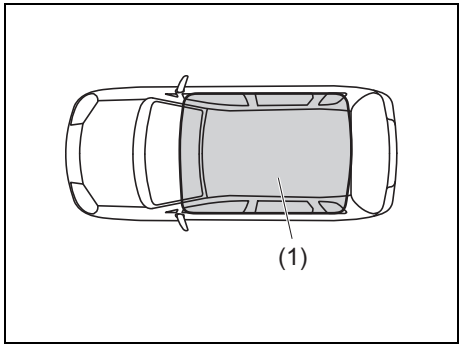

54P000373

(1) Interior workable area

The interior workable area is defined as all the interior spaces except for the space above the instrument panel.

NOTE:

- *Even when the remote controller is in the interior workable area, if it is in any of the following conditions, you may not be able to start the engine or select the ignition modes, and the REMOTE CONTROLLER OUTSIDE warning may be given.*
  - *The remote controller's battery is low.*
  - *The remote controller is affected by strong radio signals or noise.*
  - *The remote controller is in contact with or covered by a metallic object.*
  - *The remote controller is in stowage such as the glove box or a door pocket.*
  - *The remote controller is in the sun visor pocket or on the floor.*
- *Even when the remote controller is outside the interior workable area, if it is in any of the following conditions, you may be able to start the engine or select the ignition mode. The REMOTE CONTROLLER OUTSIDE warning may not be given at that time.*
  - *The remote controller is outside the vehicle but very close to a door.*
  - *The remote controller is on the instrument panel.*

Parking brake lever

EXAMPLE

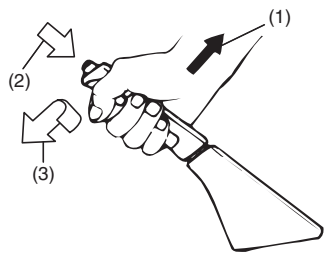

54G039

(1) To set
(2) To release
(3) To release

The parking brake lever is located between the seats. To set the parking brake, hold the brake pedal down and pull the parking brake lever all the way up. To release the parking brake, hold the brake pedal down, pull up slightly on the parking brake lever, push the button on the end of the lever with your thumb, and lower the lever to its original position.

⚠ WARNING

- **Never drive your vehicle with the parking brake on: rear brake effectiveness can be reduced from overheating, brake life may be shortened, or permanent brake damage may result.**
- **If the parking brake does not hold the vehicle securely or does not fully release, have your vehicle inspected immediately by an authorized SUZUKI dealer.**

⚠ WARNING

Always set the parking brake fully before leaving your vehicle or it may move, causing injury or damage. When parking, check that the gear-shift lever is in reverse or first gear. Remember, even though the transaxle is in gear or in Park, you must set the parking brake fully.

⚠ WARNING

When parking the vehicle in extremely cold weather, the following procedure should be used:
1) Set the parking brake.
2) Turn off the engine, and then shift into reverse or first gear.
3) Get out of the vehicle and put chocks under the wheels.
4) Release the parking brake.
When you return to your vehicle, first set the parking brake, and then remove the wheel chocks.

Parking brake reminder buzzer

A buzzer sounds intermittently to remind you to release the parking brake if you start the vehicle without releasing the parking brake. Check that the parking brake is fully released and the brake system warning light turns off.

Pedal

EXAMPLE

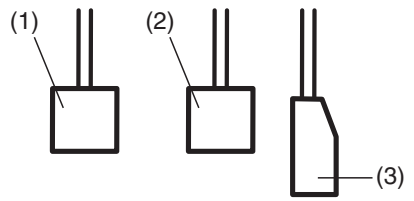

80J2121

Clutch pedal (1)

A clutch pedal is used to disengage the drive to the wheels when starting the engine, stopping, or shifting the gearshift lever. Depressing the pedal disengages the clutch.

⚠ WARNING

Do not drive with your foot resting on the clutch pedal. It could result in excessive clutch wear, clutch damage, or unexpected loss of engine braking.

Brake pedal (2)

Your SUZUKI vehicle is equipped with front and rear disc brakes. Depressing a brake pedal applies both sets of brakes.

You may hear occasional brake squeal when you apply the brakes. This is a normal condition caused by environmental factors such as cold, wet, snow, etc.

⚠ WARNING

If brake squeal is excessive and occurs each time the brakes are applied, you should have the brakes checked by your SUZUKI dealer.

⚠ WARNING

Do not apply brakes continuously or rest your foot on the brake pedal. This will result in overheating of the brakes which could cause unpredictable braking action, longer stopping distances, or permanent brake damage.

Accelerator pedal (3)

An accelerator pedal controls the speed of the engine. Depressing the accelerator pedal increases power output and speed.

Starting engine (vehicle without keyless push start system)

Before starting engine

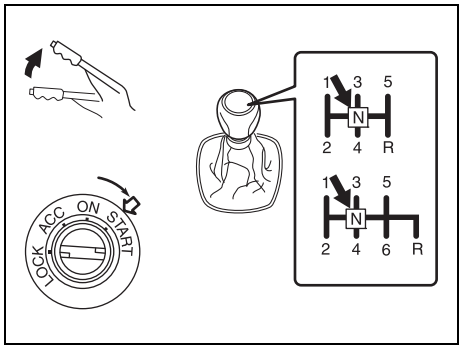

54P000303

1) Check that the parking brake is set fully.
2) Shift into “N” (Neutral) and depress the clutch pedal all the way to the floor. Hold the clutch pedal while starting the engine.

⚠ WARNING

Check that the parking brake is set fully and the transaxle is in Neutral before attempting to start the engine.

Starting a cold and warm engine

(For gasoline engine model)
With your foot taken off the accelerator pedal, crank the engine by turning the ignition key to “START”. Release the key when the engine starts.

NOTICE

- **Stop turning the starter immediately after the engine has started or the starter system can be damaged.**
- **Do not crank the engine for more than 12 seconds at a time. If the engine does not start on the first try, wait about 15 seconds before trying again.**

If the engine does not start after 12 seconds of cranking, wait about 15 seconds, and then press down the accelerator pedal to 1/3 full of capacity and try cranking the engine again. Release the key and accelerator pedal when the engine starts.

If the engine still does not start, try holding the accelerator pedal all the way to the floor while cranking. This should clear the engine if it is flooded.

(For diesel engine model)

Cold engine
Turn the ignition switch to “ON” position and wait until the glow plug indicator goes out if it comes on. Crank the engine by turning the ignition key to “START”. Release the key when the engine starts.

NOTICE

- **Stop turning the starter immediately after the engine has started or the starter system can be damaged.**
- **Do not crank the engine for more than 30 seconds at a time. If the engine does not start on the first try, wait about 15 seconds before trying again.**

Warm engine
Crank the engine by turning the ignition key to “START”. Release the key when the engine starts.

Caution when stopping the engine with turbocharger
When stopping the engine after climbing or high speed driving, let the engine idle for about one minute or more (if it is not prohibited) to cool down the turbocharger and engine oil. This is to prevent the engine oil from over-deteriorating. Deteriorated engine oil will damage the bearings of the turbocharger.

Restarting diesel engine after fuel-empty stop

If the engine stops and the low fuel warning light and the malfunction indicator light come on, use the following procedure:

1) Fill the fuel tank.
2) Hold the ignition key in “ON” position for 5-10 seconds to feed fuel.
3) Perform above engine starting procedure.

If the malfunction indicator light still comes on after the engine started, there may be some problem with the engine. Ask your SUZUKI dealer to have the engine inspected.

Starting engine (vehicle with keyless push start system)

Before starting engine

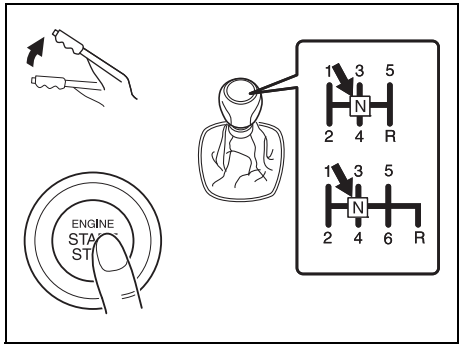

54P000304

1) Check that the parking brake is set fully.
2) Shift to “N” (Neutral) and fully depress the clutch pedal. Hold the clutch and brake pedals fully depressed.

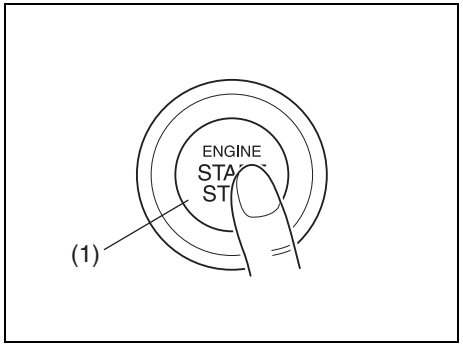

82K254

3) The “PUSH START SWITCH” message will appear on the information display in the instrument cluster. Push the engine switch (1). When the engine is started, the starter motor will automatically stop.

⚠ WARNING

Check that the parking brake is set fully and the transaxle is in Neutral before attempting to start the engine.

NOTICE

- **Do not depress the accelerator during the engine starting procedure.**
- **If the engine does not respond when you try to start it with the engine switch or if the engine switch repeats cycling through "LOCK" (OFF) - "ACC" - "ON" mode, the vehicle battery may be discharged. Check the voltage of the vehicle battery before trying again.**

NOTE:
- *You do not need to keep the engine switch pressed to start the engine.*
- *The engine will not start unless the clutch pedal is depressed.*
- *During the engine starting procedure, messages on the information display will help you. Refer to "Information display" in "BEFORE DRIVING" section for details.*
- *You should turn off such loads as the headlights and air conditioning system to facilitate starting of the engine.*
- *Even if you fail to start the engine, the starter motor will stop turning automatically after a short time. After the starter motor has stopped or if there is some problem with the system, the starter motor will rotate only while the engine switch is being pressed.*

Stopping engine

- Depress the engine switch to stop the engine after the vehicle stopped completely.
- In case of emergency, you can stop the engine by quickly pushing the engine switch more than 3 times, or pushing and holding the engine switch for more than 2 seconds while the vehicle is in motion.

NOTE:
Except in cases of emergency, do not stop the engine while the vehicle is in motion.
The steering and braking operation will require more effort when the engine is stopped.
Refer to "Braking" in this section.

- If the engine remains stopped for while after it was stopped unexpectedly or was raced before stopping, a clicking sound may be heard from around the engine when it is restarted. This is not a malfunction. Always let the engine idle before stopping it.

Starting a cold and warm engine

(For gasoline engine model)
With your foot taken off the accelerator pedal, crank the engine by pressing the engine switch to change the ignition mode to "START".

NOTICE

Do not crank the engine for more than 12 seconds at a time.
If the engine does not start on the first try, wait about 15 seconds before trying again.

After pressing the engine switch to change the ignition mode to "START", the starter cranks the engine for about 12 seconds before it can start the engine. If the engine fails to start at the first attempt, wait about 15 seconds, and then try again while keeping the engine switch pressed while pressing down the accelerator pedal 1/3 of full capacity. Release the accelerator pedal when the engine starts.

If the engine still does not start, try holding the accelerator pedal all the way to the floor while cranking. This should clear the engine if it is flooded.
If you are unable to start the engine using this procedure, consult your SUZUKI dealer.

(For diesel engine model)

Cold engine
Depress the clutch and brake pedals fully and press the engine switch to crank the engine. If the glow plug indicator light comes on, the engine will start automatically after the glow plug indicator light goes off up to 10 seconds afterward.

NOTICE

Do not crank the engine for more than 30 seconds at a time.
If the engine does not start on the first try, wait about 15 seconds before trying again.

Warm engine
Crank the engine by pressing the engine switch to change the ignition mode to "START".

Caution when stopping the engine with turbocharger
When stopping the engine after climbing or high speed driving, let the engine idle for about one minute or more (if it is not prohibited) to cool down the turbocharger and engine oil. This is to prevent the engine oil from over-deteriorating. Deteriorated engine oil will damage the bearings of the turbocharger.

Restarting diesel engine after fuel-empty stop
If the engine stops and the low fuel warning light and the malfunction indicator light come on, use the following procedure:
1) Fill the fuel tank.
2) Press the engine switch to change the ignition mode to "ON" for 5-10 seconds to feed fuel.
3) Perform the above engine starting procedure to start the engine.

If the malfunction indicator light still comes on after the engine started, there may be some problem with the engine. Ask your SUZUKI dealer to have the engine inspected.

If the master warning indicator light blinks and the engine cannot be started
Your keyless push start system remote controller may not be sensed as being within the interior workable area. Try again after checking that you have the remote controller with you. If the engine still cannot be started, the battery of the remote controller may be discharged. To start the engine, use the following method:

EXAMPLE

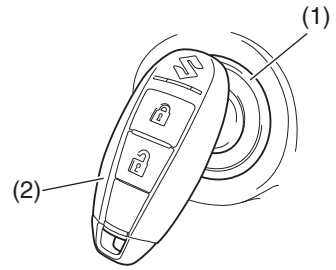

58MST0302

1) Check that the parking brake is set fully.
2) Shift to "N" (Neutral) and fully depress the clutch pedal. Hold the clutch and brake pedals fully depressed.
3) "PUSH START SWITCH." message will appear on the information display in the instrument cluster. Press the engine switch (1).
4) The master warning indicator light in the instrument cluster blinks within about 10 seconds. Touch the engine switch with "LOCK" button of remote controller (2) for about 2 seconds.

NOTE:
- *If you still cannot start the engine after several attempts using the above method, there may be a problem elsewhere, such as a low battery. Contact your SUZUKI dealer for inspection.*
- *The immobilizer/keyless push start system warning light will come on for about 5 seconds while the master warning indicator light is blinking. In addition, the information display will show a certain message during this time. Refer to "Information display" in "BEFORE DRIVING" section for details.*
- *You may customize the system to cause the interior buzzer to sound once for warning that remote controller is out of sensing range. Please contact an authorized SUZUKI dealer for the customization.*
- *If the battery of the remote controller is about to become completely discharged, the corresponding message will appear on the information display when you press the engine switch to change the ignition mode to "ON". For details on replacing the battery, refer to "Keyless push start system remote controller / keyless entry system transmitter" in "BEFORE DRIVING" section.*

Returning ignition mode to "LOCK" (OFF)

NOTE:
Certain problems such as a fault in engine system may prevent the engine switch from going back to "LOCK" (OFF) mode. If this happens, have the vehicle inspected by an authorized SUZUKI dealer after doing the following:
- *Lock the doors using the key to prevent theft. (The request switches and the keyless push start system remote controller cannot be used to lock them.)*
- *Disconnect the negative cable from the battery to prevent discharge.*

"LOCK" (OFF) mode reminder buzzer
The buzzer will stop sounding if you then push the engine switch twice, thus bringing back the ignition mode to "LOCK" (OFF).

- If you open the driver's door after pressing the engine switch to change the ignition mode to "ACC", the interior buzzer beeps intermittently.
- The buzzer will stop sounding if you then push the engine switch twice, thus bringing it back the ignition mode to "LOCK" (OFF).

NOTE:
Whenever you leave the vehicle, check that you have returned the ignition mode to "LOCK" (OFF) using the engine switch and then lock the doors. Without returning the ignition mode to "LOCK" (OFF), you cannot use a request switch or keyless push start system remote controller to lock the doors.

Steering lock warning buzzer
If the steering lock fails to engage due to a fault in the system when the ignition mode is turned to "LOCK" (OFF) by pressing the engine switch and any door (including the tailgate) is opened or closed, the interior buzzer will warn you of this condition with repeated short beeps. If this happens, have the vehicle inspected by an authorized SUZUKI dealer.

Diesel particulate filter (DPF®) (For diesel engine model)

The DPF® filters off the soot particles in the exhaust gas, so the DPF® could get clogged depending on the driving condition. The DPF® is cleaned by the regenerating function that combusts the soot particles in the DPF® by raising the exhaust gas temperature during driving or idling.

When a certain amount of soot particles is accumulated in the DPF®, the DPF® will regenerate automatically to avoid clogging the filter. When the DPF® regenerates during idling, the engine revolutions will increase by about 100 rpm and the radiator fan will operate. Therefore, you may hear a little louder engine sounds (including the fan sounds) and/or the exhaust gas temperature could be higher due to combustion of the soot particles.

⚠ CAUTION

Keep away from the exhaust pipe when the engine is running. If the DPF® is regenerating, the exhaust gas temperature could be higher.

NOTE:
When you drive or idle your vehicle, white smoke may be emitted depending on the grade of fuel used.
This is due to automatic regeneration of particle filter. It does not affect the way the vehicle runs.

DPF® warning light

64J244

If the DPF® warning light comes on when driving, the DPF® is nearly clogged. You should regenerate the DPF® when the DPF® warning light comes on. To go out the warning light, the vehicle must stay in motion until regeneration has been completed.
The process normally takes about 25 minutes.
The optimum condition to end the process is achieved by keeping the vehicle in motion at a speed of 50 km/h (31 mph) or higher, or an engine speed higher than 2,000 rpm.
However, you should drive carefully and within the legal speed limit, and should take into consideration the surrounding traffic condition.
If you drive your vehicle until the light goes out, the regeneration of the DPF® will be completed.

NOTICE

Regenerate the DPF® when the DPF® warning light comes on. Failure to regenerate the DPF® will cause a vehicle malfunction due to the clogged filter.

NOTE:
When the soot particles accumulated in the DPF® are combusted, the amount of the engine oil may increase due to the dilution with the fuel. This is not a vehicle malfunction. The soot particles accumulated in the DPF® are combusted automatically during driving. However, they may not be combusted in the following cases.
- *When you drive at low speed for a long time.*
- *When you repeat a short-time or short-distance driving.*

1) When the DPF® warning light comes on, drive at a speed of 50 km/h (31 mph) or higher for more than 25 minutes to regenerate the DPF® properly. For details, refer to “Diesel particulate filter (DPF®) (For diesel engine model)” in this section.
2) When the oil change request light blinks, change the engine oil and oil filter, and reset the oil life monitoring system. To reset the oil life monitoring system, consult your SUZUKI dealer.

3) When the engine oil level exceeds the MAX level on the dipstick, consult your SUZUKI dealer.

Using transaxle

Manual transaxle

5MT model

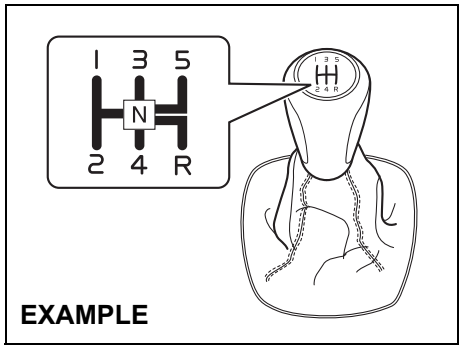

79MH0303

6MT model

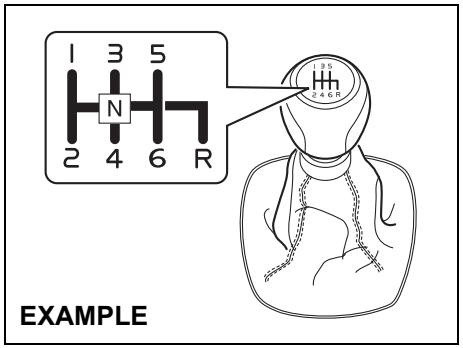

61MS2A004

Starting off
To start off, depress the clutch pedal all the way to the floor and shift into 1st gear. After releasing the parking brake, gradually release the clutch. When you hear a change in the engine's sound, slowly press the accelerator while continuing to gradually release the clutch.

Shifting
All forward gears are synchronized and provide quiet and easy shifting. Always depress the clutch pedal all the way to the floor before shifting gears. Keep the engine speed from rising into the red zone of the tachometer.

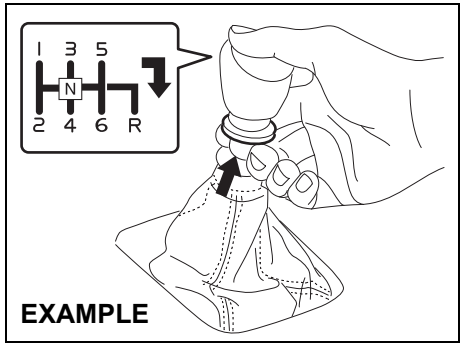

61MS2A005

Reverse gear (6MT model): with lifting up ring, shift the gearshift lever to the right, engage gear.

Downshifting maximum allowable speeds

5MT model (for M16A engine)

Downshifting	km/h (mph)
2nd to 1st	45 (28)
3rd to 2nd	90 (56)
4th to 3rd	135 (84)
5th to 4th	190 (119)*

6MT model (for D16AA engine)

Downshifting	km/h (mph)
2nd to 1st	45 (28)
3rd to 2nd	75 (47)
4th to 3rd	130 (81)
5th to 4th	180 (113)*
6th to 5th	225 (141)*

**NOTE:*
You may not accelerate to the maximum allowable speed because of the driving situation and/or the vehicle condition.

NOTICE

Do not downshift to a lower gear at the speed faster than the maximum allowable speeds for the next lower speed, or severe engine damage can result.

⚠ WARNING

- **Reduce your speed and downshift to a lower gear before going down a long or steep hill. A lower gear will allow the engine to provide braking. Avoid riding the brakes or they may overheat, resulting in brake failure.**
- **When driving on slippery roads, slow down before downshifting. Excessive and/or sudden changes in engine speed may cause loss of traction, which could cause you to lose control.**

NOTICE

Check that the vehicle is completely stationary before you shift into reverse.

NOTICE

- **To help avoid clutch damage, do not use the clutch pedal as a footrest while driving or use the clutch to keep the vehicle stationary on a slope. Depress the clutch fully when shifting.**
- **When shifting or starting off, do not race the engine. Racing the engine can shorten engine life and cause negative effect to smooth shifting.**

Gearshift indicator

EXAMPLE

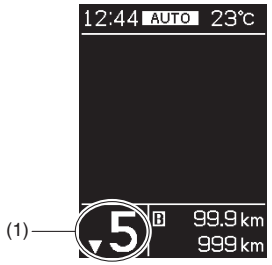

61MM0A133

(1) Gearshift indicator

In the following cases, the gearshift indicator is indicated on the information display when the ignition switch is in “ON” position or the ignition mode is “ON”.

- When the gearshift lever is in a position other than “N” (Neutral).
- For vehicles equipped with the cruise control, when the system is not in use.

The electronic control system monitors driving conditions (such as vehicle speed and/or engine revolution), and it shows which gear position is appropriate for your driving with the indication on the display.

If the UP/DOWN arrow and a gear position other than what is currently selected are indicated on the display while driving, we recommend that you shift the gear up or down to indicated position. This is the appropriate gear position for a driving condition that reduces the over revolution and stress to the engine, and improves fuel consumption.

For details on how to use the transaxle, refer to “Using transaxle” in this section.

⚠ WARNING

The gearshift indicator is designed to indicate the appropriate gear position for your driving, however, this indicator does not relieve the driver of any responsibility to operate gear changes attentively.

To drive safely, do not focus your attention on the gearshift indicator, pay attention to your driving situation and shift up or down if necessary.

NOTE:

- *The gearshift indicator is not indicated when the gear position is in “N” (Neutral).*
- *If you depress the clutch pedal while UP/DOWN arrow is indicated, the indication will disappear.*
- *In ordinary driving, UP arrow will disappear when you release your foot from the accelerator pedal.*
  If your vehicle is equipped with the adaptive cruise control and while it is working, however, UP/DOWN arrow may be indicated continuously depending on driving conditions. It means that the indicated gear position is appropriate for the current cruising speed.
- *The indication of gearshift indicator timing may differ depending on the vehicle condition and/or driving situation even in the same vehicle speed and engine revolution.*
- *If any of the electrical systems such as the radar brake support system or the ESP® is working, the gearshift indicator will disappear temporarily.*

Example of the gearshift indicator

Indication	Description
▲4	Lower gear position is selected for the vehicle speed and/or engine revolution. Changing to a higher gear position is recommended. • In this case, shifting up to 4th gear position is recommended.
•3	Current gear position is appropriate for the vehicle speed and/or engine revolution. • In this case, 3rd gear position is the best.
▼2	Higher gear position is selected for the vehicle speed and/or engine revolution. Changing to a lower gear position is recommended. • In this case, shifting down to 2nd gear position is recommended.

Four-mode 4WD system (if equipped)

EXAMPLE

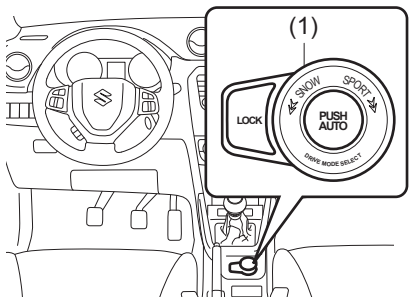

54P000305

(1) Driving mode switch

The four-mode 4WD system enables you to select the driving mode according to driving conditions by operating the driving mode switch.

Driving modes

AUTO
This mode prioritizes fuel economy in typical driving conditions. The system switches the driving mode to 4WD if it detects wheel spin.

SPORT
This mode is appropriate for sporty driving. The system apportions torque to promote cornering performance.

SNOW
This mode is appropriate for snowy, unpaved, and other slippery surfaces. This mode enhances traction during acceleration on slippery surfaces, and enables stable cornering on slippery surfaces.

LOCK
This mode is for extricating the car from snow, mud or sand.

Driving mode switch operation

Operate the driving mode switch according to the appropriate procedure described below.

How to turn on driving mode switch
The driving mode switch will activate when the ignition switch is in “ON” position or the ignition mode is “ON”.

EXAMPLE

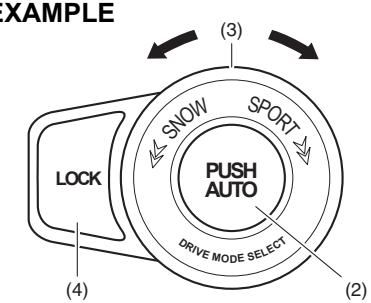

61MM0B005

Selecting AUTO mode
Push “PUSH AUTO” part (2) of the driving mode switch.

Selecting SPORT mode
Turn the dial (3) of the driving mode switch clockwise to “SPORT” position.

Selecting SNOW mode
Turn the dial (3) of the driving mode switch counterclockwise to “SNOW” position.

Selecting LOCK mode
When the vehicle speed is less than 60 km/h (37 mph) and the SNOW mode is selected, push “LOCK” part (4) of the driving mode switch.

NOTE:
If the vehicle speed exceeds about 60 km/h in the LOCK mode, the driving mode changes to the SNOW mode automatically. Even when the vehicle speed reduces, on

the other hand, the driving mode does not return to the LOCK mode automatically. You should select the LOCK mode according to the driving conditions.

NOTE:
- *The information display shows current driving mode.*
- *When the ignition switch is turned to "ON" position or the engine switch is pressed to change the ignition mode to "ON", the AUTO mode is selected automatically.*
- *The driving mode switch can be operated when the vehicle is either stopped or moving.*
- *Check that the front wheels are in the straight ahead position when operating the driving mode switch.*
- *While making turns or accelerating and decelerating, operating the driving mode switch, turning the ignition switch to "ACC" or "LOCK" position or pressing the engine switch to change the ignition mode to "ACC" or "LOCK" may cause a shock, but this is not a system malfunction.*
- *When you operate your vehicle under conditions that involve wheel spin, such as driving off-road in the sand or water or when a wheel has run off the road, the difference in the amount of revolution between front wheels and rear wheels increases (wheels run idle). If this state continues, the oil temperature of the driving system parts increases.*

The 4WD warning light warns of this condition by blinking. At the same time, the information display shows this message: "AWD SYSTEM HIGH TEMP AWD IS OFF".

57L30042

When the 4WD warning light blinks, park the vehicle at a safe place and run the engine idle. After a while, the 4WD warning light will go out and the system will resume.

NOTICE

- **Note that 4WD vehicles are not all-around vehicles. Observe the following instructions when driving your vehicle.**
  - **Do not drive through water such as by crossing a river.**
  - **Do not drive continuously in places such as sand and mud where front wheels tend to race.**
  - **When any wheel is in the air for such reason as running off the road, do not race it needlessly.**

(Continued)

NOTICE

(Continued)
- **If the 4WD warning light comes on or blinks when driving, there may be something wrong with the four-mode 4WD system. Have the system inspected by an authorized SUZUKI dealer.**

NOTICE

Unevenly worn tires can cause problems with the 4WD system. Rotate the tires according to the maintenance schedule. Refer to "Tires" and "Maintenance schedule" in "INSPECTION AND MAINTENANCE" section for proper tire rotation procedure.

Warning and indicator messages

The information display shows the warning and indicator message when the four-mode 4WD system is operated, or has a problem.

Warning and indicator messages

Warning and indicator message	Master warning indicator light	Sound	Cause and remedy
4WD SERVICE 4WD SYSTEM 61MM0A185	Blinks	Beep (one time from interior buzzer)	There may be a problem with the four-mode 4WD system. Have your vehicle inspected by an authorized SUZUKI dealer.
4WD UNEVEN TIRE SIZE 4WD IS OFF 61MM0A186	Blinks	Beep (one time from interior buzzer)	Tires of different sizes may be fitted or tires may be insufficiently inflated. Have your vehicle inspected by an authorized SUZUKI dealer.

Warning and indicator message	Master warning indicator light	Sound	Cause and remedy
4WD 4WD SYSTEM HIGH TEMP 4WD IS OFF 61MM0A187	Blinks	Beep (one time from interior buzzer)	Drive train components may be over-heated. Stop in a safe place and allow the engine to idle.
4WD 4WD MODE UNSELECTABLE AUTO MODE ON 61MM0A203	Blinks	Beep (one time from interior buzzer)	If this message is displayed, have your vehicle inspected by an authorized SUZUKI dealer.

Warning and indicator message	Master warning indicator light	Sound	Cause and remedy
4WD LOCK MODE CANNOT BE SET 61MM0A204	Blinks	Beep (one time from interior buzzer)	“LOCK” part of the driving mode switch is pushed when the vehicle speed is more than 60 km/h (37 mph). (#1) Refer to “Selecting LOCK mode” in this section.
4WD NOT LOCKABLE SET TO SNOW MODE FIRST 61MM0A188	Blinks	Beep (one time from interior buzzer)	“LOCK” part of the driving mode switch is pushed without selecting the SNOW mode. (#1) Refer to “Selecting LOCK mode” in this section.

(#1) This message will disappear for a while even if the problem that caused the message to appear is not corrected.

Warning and indicator message	Master warning indicator light	Sound	Cause and remedy
61MM0A189	Blinks	Beep (one time from interior buzzer)	There may be a problem with the driving mode switch. Have your vehicle inspected by an authorized SUZUKI dealer.

ENG A-STOP system (engine auto stop start system) (if equipped)

The ENG A-STOP system (engine auto stop start system) automatically stops and restarts the engine without operating the ignition switch or the engine switch when the vehicle is stopped, such as at a traffic signal or in a traffic jam, to reduce exhaust gases and fuel consumption.

- When the vehicle will be stopped for a long time or when you will leave the vehicle unattended, turn the ignition switch to “LOCK” position or press the engine switch to stop the engine.

NOTE:
If your vehicle is equipped with the auto air conditioning system, you can change the auto engine stop condition via the information display. Refer to “Information display” in “BEFORE DRIVING” section.

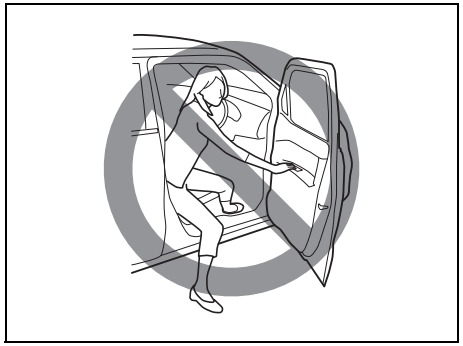

72M2042

⚠ WARNING

- **Do not get out of the vehicle when the engine is stopping by the ENG A-STOP system. If the driver’s seat belt is unfastened and the driver’s door is opened, the engine will stall.**
- **When the engine does not restart automatically even if you operate it properly, start the engine using the ignition switch or engine switch.**
  - **Continuously stopping on the road may result in rear crash.**
  - **In case the vehicle moves, the steering and braking operation will require more efforts.**

NOTICE

Only use the vehicle battery types that have been approved by SUZUKI vehicle manufacturer, otherwise you could damage your vehicle, and the ENG A-STOP system could not be available. If a vehicle battery has to be replaced, consult your authorized SUZUKI dealer.

The ENG A-STOP system is automatically activated when the ignition switch is turned to “ON” position or the engine switch is pressed to change the ignition mode to “ON”.

The system activation also requires the following conditions:
- Driver’s seat belt is fastened.
- Driver’s door is closed.
- Engine hood is closed.

For more details, refer to the explanation below.

Automatically stopping engine

1) With the clutch pedal fully depressed, stop the vehicle.

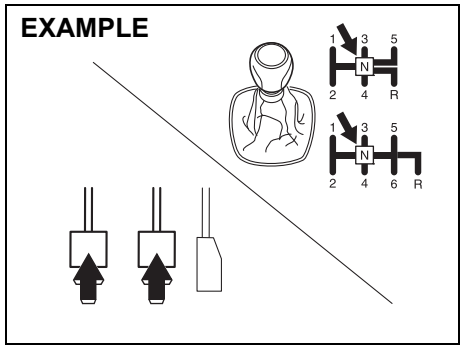

54P000367

2) While depressing the brake and clutch pedal, place the gearshift lever in “N” (Neutral) position.

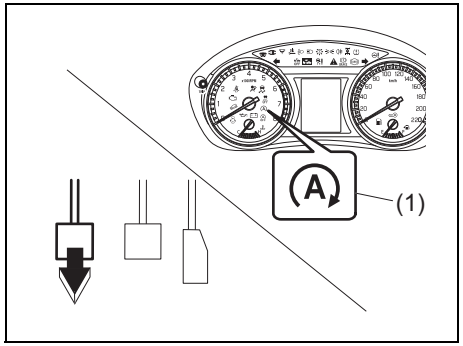

54P000306

3) Release the clutch pedal.
“ENG A-STOP” indicator light (green) (1) in the instrument cluster will illuminate and the engine will stop automatically.

NOTICE

The brake booster becomes inoperative and the pedal effort will increase when the engine is stopped automatically.
If the vehicle is moving, press down the brake pedal harder than usual.

NOTE:
The ENG A-STOP system will not operate and engine does not stop automatically under the following conditions:

- *“ENG A-STOP OFF” switch is pressed to deactivate the ENG A-STOP system.*
- *“ENG A-STOP OFF” light blinks.*
- *Engine coolant temperature is either low or high.*
- *Vehicle battery performance is low.*
- *The temperature of the vehicle battery is either low or high.*
- *Brake booster vacuum pressure is low.*
- *Depressing the accelerator pedal.*
- *Blower speed selector is set to ON mode and the inside of the vehicle has not sufficiently cooled and warmed (for the vehicle with automatic air conditioning).*
- *The defrost switch is set to ON mode (for the vehicle with automatic air conditioning).*
- *During or after the ABS or ESP® system is activated, and the vehicle is stopped.*
- *During the first period use, to initialize the system.*
- *After the engine restarted automatically, and the vehicle speed had not exceeded approximately 6 km/h.*
- *When the engine is started with the hood open.*
- *When the vehicle is stopped after backing up.*

Automatically restarting the engine

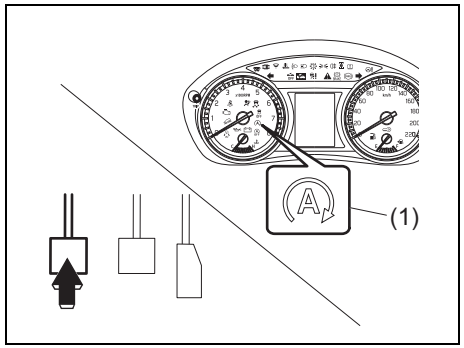

54P000307

Depress the clutch pedal while the gearshift lever is in “N” (Neutral) position.
“ENG A-STOP” indicator light (green) (1) in the instrument cluster will be turned off and the engine will restart automatically.

NOTICE

The ENG A-STOP system will not operate and engine does not restart automatically or the engine stalls with warning buzzer under the following conditions:
- **Driver’s seat belt is not fastened and driver’s door is open.**
- **Engine hood is open.**
- **If the gearshift lever is moved to a position other than “N” (Neutral) position without depressing the clutch pedal.**

When the engine stalls, restart the engine by usual operation.
Refer to “Starting the engine (vehicle with keyless push start system)” or “Starting engine (vehicle without keyless push start system)” in this section for details.

NOTE:
If the engine stalled by a rapid clutch operation, the engine will restart with the gear positioned “N” (neutral) and the clutch pedal depressed.

NOTE:
Under the following conditions, the engine will restart automatically even if the engine was stopped by the ENG A-STOP system:
- *When the vehicle coasts down a slope.*
- *An engine stopped, and a few minutes passed.*
- *Brake booster vacuum pressure is low.*
- *Vehicle battery performance is low.*
- *Blower speed selector is set to ON mode and the inside of the vehicle has not sufficiently cooled and warmed (for the vehicle with automatic air conditioning).*
- *The defrost switch is set to ON mode (for the vehicle with automatic air conditioning).*
- *Electric power consumption is high, such as when the heated rear window switch and heated outside rearview mirror switch (if equipped) is “ON” or other electrical components (audio, air conditioning etc.) are operating.*
- *“ENG A-STOP OFF” switch is pressed to deactivate the ENG A-STOP system.*

NOTE:
When the engine restarts, the sound of the audio may be interrupted.
This is normal and not a malfunction of the audio system.

To deactivate ENG A-STOP system

EXAMPLE

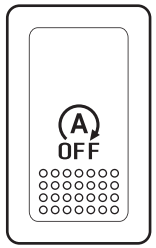

61MM0A101

Push “ENG A-STOP OFF” switch. “ENG A-STOP OFF” light will come on.

“ENG A-STOP OFF” light

If “ENG A-STOP OFF” light blinks when driving, there may be something wrong with the ENG A-STOP system. You should have the system inspected by an authorized SUZUKI dealer. For details, refer to “Warning and indicator lights” in “BEFORE DRIVING” section.

Adaptive cruise control system (if equipped)

The adaptive cruise control system allows you to maintain a steady speed without keeping your foot on the accelerator pedal. You can use the adaptive cruise control system under the following conditions:

- Driver’s seat belt is fastened.
- Open door warning light is off.
- Parking brake is completely released.
- Speed limiter is not used.
- The gear position is in 3rd, 4th, 5th or 6th (if equipped).
- The vehicle speed is about 40 km/h (25 mph) or higher.
- ESP® OFF switch is not pushed and the system is not turned off.

⚠ WARNING

Deceleration control by the adaptive cruise control system is limited. Therefore, you are requested to pay enough attention for safety driving, by checking the surrounding traffic always and operating brake pedal and/or accelerator pedal as necessary.

The adaptive cruise control system has the following four controls.

(1) Constant-speed control
(There is no vehicle ahead)

EXAMPLE

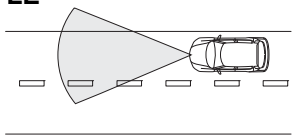

54P000342

Your vehicle cruises at the set speed.

- The vehicle speed can be set between 40 km/h (25 mph) to 160 km/h (100 mph).

(2) Deceleration control
(A vehicle ahead is within radar range and going slower than the set speed)

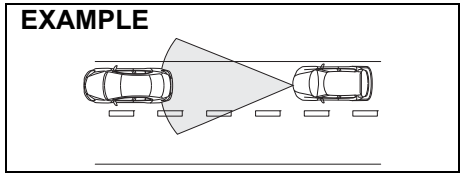

54P000343

Your vehicle slows down, and maintains the same speed as the speed of the vehicle ahead to maintain the following distance.

- Possible detecting distance between your vehicle and a vehicle ahead is within about 100 m (328 ft).

(3) Following control
(A vehicle ahead is within radar range and going at a steady speed)

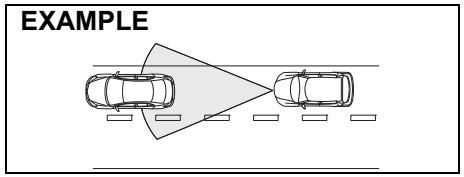

54P000344

Your vehicle follows the vehicle ahead, keeping a constant distance, without exceeding the set speed.

NOTE:

- *When your vehicle is getting close to the vehicle ahead while deceleration control or following control is functioning, a frontal collision warning is activated.*
- *When operating brake pedal during following control, you might feel that a brake is heavy. However, this is normal in the brake system. This occurs because of the feature of adaptive cruise control system.*

(4) Acceleration control
(A vehicle ahead goes out of range)

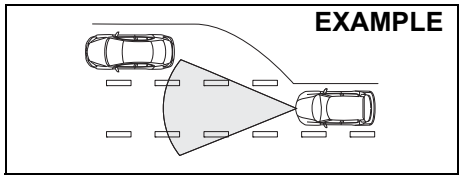

54P000345

The adaptive cruise control system accelerates your vehicle to the set speed, and then maintains it.

Situations where radar will not activate properly

⚠ WARNING

Do not use the adaptive cruise control system under the following situations. Otherwise, the system will not function properly and unexpected accidents may occur.

Under the following situations, there is a high possibility that deceleration control, following control and acceleration control will not function properly, even if a vehicle ahead is within radar range.

- When vehicle is driven in a traffic jam
- When vehicle is driven on sharp curves
- When vehicle is driven on slippery road such as ice or snow-covered road
- When vehicle is driven on steep hill

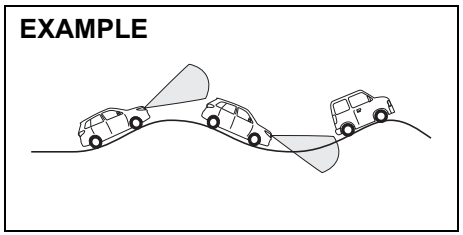

54P000376

- When vehicle is driven on the road with many steep uphills and downhills
- When your vehicle is towing a trailer

EXAMPLE

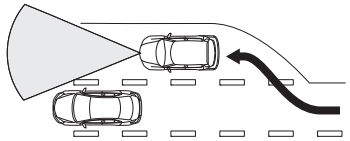

54P000374

- Highway gate
- When the vehicle cannot move in a straight manner without consistently steering, due to an accident or breakdown
- When the vehicle is running left turn lane or right turn lane
- When the radiator grill or front bumper hit a hard object
- When the system is temporarily stopped or malfunctioning, some of the following indicator and messages will come on:
  – Adaptive cruise control system warning light
  – “INSPECT CRUISE SYSTEM” message
  – “RADAR BRAKE SUPPORT: NOT ACTIVE BY SENSOR.” message
  – “RADAR BRAKE SUPPORT SYS INSPECTION REQUIRED” message
  – “RADAR BRAKE SUPPORT FCN TEMPORARILY DISABLED” message

Situations where radar may not activate properly

Under the following situations, the radar may not detect a vehicle ahead correctly and frontal collision warning may not function. You need to decelerate the vehicle operating brakes as necessary.

- When a vehicle ahead is running slowly or stopping at the end of the line in a traffic jam or the tollgate
- When the vehicle is approaching repairing road
- While running inside of tunnel
- When the radar sensor cover is covered in snow, water or dirt
- When there is bad weather such as heavy rain or fog, a blizzard or sandstorm or when the vehicle in front of you is surrounded by water, snow or sand
- A vehicle ahead has extremely small rear end area such as an unloaded trailer
- When your vehicle is weighed down by heavy items in the luggage compartment or rear seat
- When your vehicle is running at 160 km/h (100 mph) or higher speed
- When a vehicle ahead is cutting in suddenly

EXAMPLE

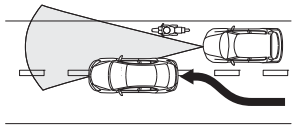

54P000375

- When the bicycles or motorcycles are running on the edge of your lane

⚠ WARNING

Always drive safely with proper driving operations depending on traffic situation.

Situations where radar may activate properly

Under the following situations, the radar system detects a vehicle on the neighboring lane or roadside objects and frontal collision warning may function.

- At a corner or narrow traffic lane
- The vehicle position in your lane is unstable due to steering operation etc.
- Objects protruding from the road's surface such as manhole covers and other metal objects, as well as falling objects or level changes in the road

⚠ WARNING

Always drive safely with proper driving operations depending on traffic situation.

Setting cruising speed

Adaptive cruise control switch

EXAMPLE

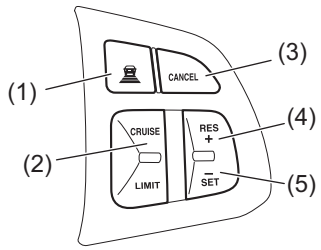

54P000346

(1) Following distance setting switch
(2) "CRUISE" switch
(3) "CANCEL" switch
(4) "RES +" switch
(5) "SET –" switch

Information display

EXAMPLE

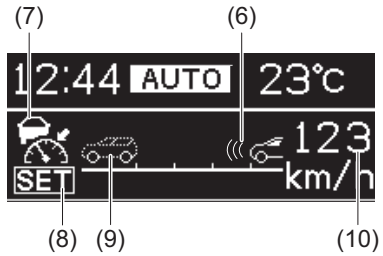

54P000347

(6) Distance indicator
(7) Cruise indicator
(8) "SET" indicator
(9) Vehicle ahead detecting indicator
(10) Set speed indication

1) Turn on the adaptive cruise control system by pushing "CRUISE" switch (2).When the cruise indicator (7) and distance indicator (6) appear on the information display, you can set cruising speed.
2) Accelerate or decelerate to the desired speed.

3) Push “SET –” switch (5), “SET” indicator (8), vehicle ahead detecting indicator (9) and set speed indication (10) appear on the information display.
Take your foot off the accelerator pedal and the set speed will be maintained. At this time, vehicle ahead detecting indicator (9) will vary as follows, depending on the presence or absence of the vehicle ahead.

Indication	Description
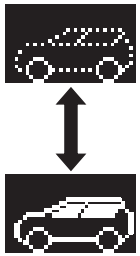	A vehicle ahead is not detected. In this case, the vehicle is in the state of constant-speed control.
	A vehicle ahead is detected. In this case, the vehicle is in the state of deceleration control and following control.

⚠ WARNING

If the cruising speed is accidentally set, you could lose control of the vehicle. This could lead to an accident, resulting in severe injury or death.

Turn off the adaptive cruise control system and check that the cruise indicator (7) disappears when the system is not in use.

Changing vehicle distance
While cruise indicator (7) is on, you can adjust a following distance between your vehicle and the vehicle ahead as follows, by pressing following distance setting switch (1).

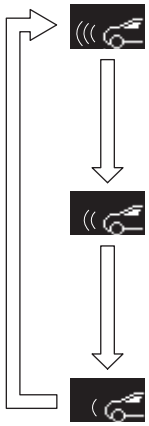	Long A following distance will be kept longer, compared with Middle setting.
	Middle This is an initial setting. When your vehicle is driven at 80 km/h (50 mph), a following distance will be kept as about 40 m (131 ft).
	Short A following distance will be kept shorter, compared with Middle setting.

⚠ WARNING

Maintain a safe following distance depending on traffic situation. Otherwise, it could result in severe injury or death.

NOTE:
- *When turning off the engine, the previously set distance in the memory is canceled and the system is initialized.*
- *An appropriate following distance will vary depending on vehicle speed.*

Changing speed temporarily

When the cruising speed is maintained, you can temporarily accelerate or decelerate.

To accelerate, depress the accelerator pedal. When you take your foot off the pedal, your vehicle will return to the set speed.

To decelerate, depress the brake pedal. The set speed will be canceled and “SET” indicator (8) will disappear. To resume the previously set speed, push “RES +” switch (4) and turn on “SET” indicator (8) again when vehicle speed is above about 40 km/h (25 mph). The vehicle will accelerate to the previously set speed and maintain its speed.

Changing cruising speed

Using the accelerator pedal
To reset at a faster cruising speed, accelerate to the desired speed using the accelerator pedal and push “SET –” switch (5). The new speed will be maintained.

Using the brake pedal
To reset at a slower cruising speed, decelerate to the desired speed using the brake pedal and push “SET –” switch (5). The new speed will be maintained.

NOTE:
When the brake pedal is depressed, “SET” indicator (8) disappears until you reset the cruising speed.

Using “RES +” switch or “SET –” switch
To reset at a faster cruising speed, press repeatedly or hold push “RES +” switch (4). Vehicle speed will steadily increase. When you release the switch, the new speed will be maintained.

To reset at a slower cruising speed, press repeatedly or hold push “SET –” switch (5) until the vehicle has slowed to the desired speed, and then release the switch. The new speed will be maintained.

NOTE:
- *You can adjust the set speed by 1 km/h (or 1 mph) by pushing "RES +" switch (4) or "SET –" switch (5) quickly.*
- *You can adjust the set speed by 5 km/h (or 5 mph) by pushing and holding "RES +" switch (4) or "SET –" switch (5).*
- *While deceleration control or following control is activated, the vehicle is not accelerated even though resetting to higher cruising speed by continuous pushing "RES +" switch (4) is operated. However, if the vehicle ahead disappears, the vehicle is accelerated automatically to the set speed.*

Cancelling adaptive cruise control

"SET" indicator (8) will disappear and the adaptive cruise control system will be canceled temporarily under the following conditions:

- When "CANCEL" switch (3) is pushed
- When brake pedal is depressed
- When clutch pedal is continuously depressed
- When vehicle speed falls below about 40 km/h (25 mph)
- When a vehicle skids and ESP® is activated
- When radar sensor cover is covered in snow, water or dirt
- When engine speed is too high or too low
- When gear position is changed to "N" (Neutral)
- When gear position is changed to 1st or 2nd
- When driver's door is open
- When driver's seat belt is unfastened
- When parking brake is applied
- When "LIMIT" switch is pressed
- When ESP® OFF switch is pressed

To resume the previously set speed, push "RES +" switch (4) and show "SET" indicator (8). The vehicle speed must be above about 40 km/h (25 mph) when the vehicle is not under the above conditions.

To turn off the adaptive cruise control system, push "CRUISE" switch (2) and check that the cruise indicator (7) disappears. Also, if any warning indication or message related to the adaptive cruise control system is displayed on the instrument cluster, the adaptive cruise control system will be turned off.

NOTE:
If you turn off the adaptive cruise control system, the previously set speed in the memory is cleared. Reset your cruising speed again.

Frontal collision warning

(1)

54P000353

If your vehicle gets too close to the vehicle ahead as described below, the interior buzzer sounds, the indicator (1) appears on the information display at the same time, to promote deceleration.

- The vehicle ahead of you slows down abruptly.
- Another vehicle cuts in front of you.

Depress the brake pedal, and keep an appropriate distance from the vehicle ahead. The buzzer timing of frontal collision warning varies depending on the vehicle speed and a following distance between your vehicle and the vehicle ahead.

There are different frontal collision warning operations in adaptive cruise control system and radar brake support system. Therefore, the interior buzzer in adaptive cruise control system sounds a little earlier than the buzzer in radar brake support system. For details of frontal collision warning in radar brake support system, refer to “Radar brake support system (if equipped)” in this section.

⚠ WARNING

- **Do not use the adaptive cruise control system in a heavy traffic area where the frontal collision warning frequently activates.**
- **Even if the distance between your vehicle and the vehicle ahead is short, frontal collision warning may not alert you under the following circumstances:**
  - **The vehicle ahead of you is going at almost the same speed as, or faster than your vehicle.**
  - **When the vehicle ahead of you is going away from your vehicle.**
  - **Right after setting up to the desired speed.**
  - **While depressing the accelerator pedal or right after releasing the pedal.**
  - **While decelerating by depressing the brake pedal.**

Handling the radar sensor

For details on radar sensor, refer to “Radar brake support system” in this section.

Warning and indicator messages

The information display shows the warning and indicator messages to let you know about certain problems of the adaptive cruise control system.

Warning and indicator message	Master warning indicator light	Sound	Cause and remedy
54P000356	Blinks	Beep (one time from interior buzzer)	There may be malfunction of the adaptive cruise control system. Contact your SUZUKI dealer for inspection.
54P000355	Blinks	Beep (one time from interior buzzer)	The radar brake support system is disabled temporarily because dirt is detected on the sensor cover, or millimeter-waves from the radar sensor cause diffused reflection. If the message does not disappear for a while, wipe the sensor cover with a soft cloth.

Warning and indicator message	Master warning indicator Light	Sound	Cause and remedy
RADAR BRAKE SUPPORT SYS INSPECTION REQUIRED 54P000357	Blinks	Beep (one time from interior buzzer)	There may be a problem with the radar brake support system. Have your vehicle inspected by an authorized SUZUKI dealer.
RADAR BRAKE SUPPORT FCN TEMPORARILY DISABLED 54P000358	Blinks	Beep (one time from interior buzzer)	There may be a problem with the radar brake support system and the system is disabled temporarily. If the message does not disappear for a while, have your vehicle inspected by an authorized SUZUKI dealer.

Cruise control (if equipped)

The cruise control system allows you to maintain a steady speed without keeping your foot on the accelerator pedal. The controls for operating the cruise control system are on the steering wheel.

You can use the cruise control system under the following conditions:

- The gear position is in 3rd, 4th, 5th or 6th (if equipped).
- The vehicle speed is about 40 km/h (25 mph) or higher.

⚠ WARNING

To help avoid loss of vehicle control, do not use the cruise control system when driving in heavy traffic, on slippery or winding roads, or on steep downhills.

Models without speed limiter

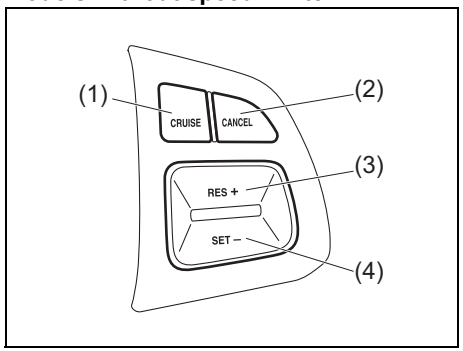

54P000361

(1) “CRUISE” switch
(2) “CANCEL” switch
(3) “RES +” switch
(4) “SET –” switch

Models with speed limiter

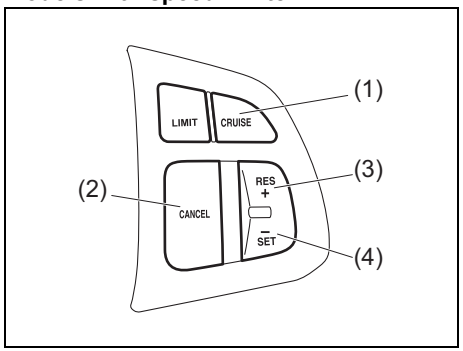

54P000362

(1) “CRUISE” switch
(2) “CANCEL” switch
(3) “RES +” switch
(4) “SET –” switch

Setting cruising speed

1) Turn on the cruise control system by pushing “CRUISE” switch (1). When the cruise indicator (5) comes on, you can set cruising speed.
2) Accelerate or decelerate to the desired speed.
3) Push “SET –” switch (4) and turn on the set indicator (6). Take your foot off the accelerator pedal and the set speed will be maintained.

⚠ WARNING

If the cruising speed is set by accident, you cannot decelerate or could loose control of the vehicle. This could lead to an accident, resulting in severe injury or death.

Turn off the cruise control system and check that the cruise indicator (5) is off when the system is not in use.

Information display

(5) (6)

54P000308

(5) Cruise indicator
(6) Set indicator

When you push “CRUISE” switch (1), the system is on and the cruise indicator (5) will come on. When the vehicle’s speed is controlled by the cruise control system, the set indicator (6) will come on.

Changing speed temporarily

When the cruising speed is maintained, you can temporarily accelerate or decelerate.

To accelerate, depress the accelerator pedal. When you take your foot off the pedal, your vehicle will return to the set speed.

To decelerate, depress the brake pedal. The set speed will be canceled and the set indicator (6) will go off.
To resume the previously set speed, push “RES +” switch (3) and turn on the set indicator (6) again when vehicle speed is above 40 km/h (25 mph). The vehicle will accelerate to and maintain the previously set speed.

Changing cruising speed

Using the accelerator pedal
To reset at a faster cruising speed, accelerate to the desired speed using the accelerator pedal and push “SET –” switch (4). The new speed will be maintained.

Using the brake pedal
To reset at a slower cruising speed, decelerate to the desired speed using the brake pedal and push “SET –” switch (4). The new speed will be maintained.

NOTE:
When the brake pedal is depressed, the set indicator (6) goes off until the cruising speed is reset.

Using “RES +” switch or “SET –” switch
To reset at a faster cruising speed, press repeatedly or hold push “RES +” switch (3). Vehicle speed will steadily increase. When you release the switch, the new speed will be maintained.

To reset at a slower cruising speed, press repeatedly or hold push “SET –” switch (4) until the vehicle has slowed to the desired speed, and then release the switch. The new speed will be maintained.

NOTE:
You can adjust the set speed by approximately 1.6 km/h (1.0 mph) by pushing “RES +” switch (3) or “SET –” switch (4) quickly.

Cancelling cruise control

“SET” indicator (5) will disappear and the cruise control will be canceled temporarily with the following conditions:

- Push “CANCEL” switch (2).
- Depress the brake pedal.
- Depress the clutch pedal.
- The vehicle speed falls more than about 20 percent from the set speed.
- Any time the vehicle speed falls below 40 km/h (25 mph).
- When the vehicle skids and ESP® is activated.

To resume the previously set speed, push “RES +” switch (3) and turn on the set indicator (6). The vehicle speed must be above 40 km/h (25 mph) when the vehicle is not under the above conditions.

To turn off the cruise control system, push “CRUISE” switch (1) and check that the cruise indicator (5) is off.
Also, if the malfunction indicator light in the instrument cluster comes on or blinks, the cruise control system will be turned off.

NOTE:
If you turn off the cruise control system, the previously set speed in the memory is cleared. Reset your cruising speed again.

Speed limiter (if equipped)

EXAMPLE

54P000363

The speed limiter allows you to choose a maximum speed that you do not wish to exceed.

Models with adaptive cruise control

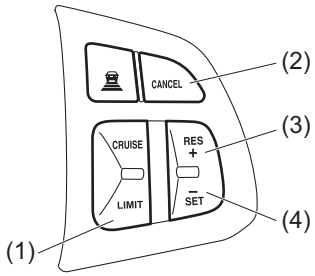

54P000364

(1) “LIMIT” switch
(2) “CANCEL” switch
(3) “RES +” switch
(4) “SET –” switch

Models with cruise control

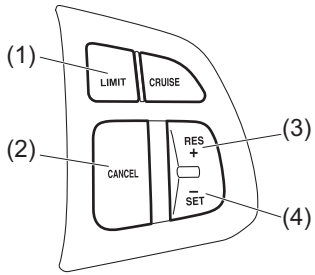

54P000365

(1) “LIMIT” switch
(2) “CANCEL” switch
(3) “RES +” switch
(4) “SET –” switch

Setting maximum speed

1) Turn on the speed limiter system by pushing “LIMIT” switch (1). When the limit indicator (5) comes on, you can set the maximum speed.
2) Accelerate or decelerate to the desired speed.
3) Push “SET –” switch (4) and turn on the set indicator (6). The current vehicle speed is set as the maximum speed.

NOTE:
If you push “SET –” switch (4) when the vehicle speed is less than 30 km/h or 20 mph, the maximum speed will be set to 30 km/h or 20 mph.

Information display

EXAMPLE

(5) (6) (7)

54P000366

(5) Limit indicator
(6) Set indicator
(7) Speed indication

When you push “LIMIT” switch (1), the system is on and the limit indicator (5) will come on. When the vehicle’s maximum speed is set, the set indicator (6) will come on.

Exceeding maximum speed

You can exceed the maximum speed temporarily by quickly depressing the accelerator pedal all the way down. While the vehicle speed is exceeded, the speed indication (7) on the information display will flash and the buzzer will sound briefly.
If the accelerator pedal is released to return below the maximum speed, the speed indication (7) will stop flashing and then stay lit, and the function will restore.

NOTE:
- *When you depress the accelerator pedal slowly, the vehicle speed may not exceed the maximum speed. If you wish to exceed the maximum speed, depress the accelerator pedal all the way down quickly or push “CANCEL” switch (2) to cancel the maximum speed temporarily.*
- *The speed indication (7) will also flash and the buzzer will sound if the speed limiter cannot prevent the vehicle from exceeding the maximum speed in such cases as when going down a steep hill, or under excessive acceleration. In this case, decelerate to return below the maximum speed using the brake pedal.*

Changing speed setting

Setting to the current speed
1) Push “CANCEL” switch (2).
2) Accelerate or decelerate to the desired speed.
3) Push “SET –” switch (4) and turn on the set indicator (6). The current vehicle speed is set as the maximum speed.

Using “RES +” switch or “SET –” switch
To change to a faster speed, press repeatedly or hold push “RES +” switch (3).

To change to a slower speed, press repeatedly or hold push “SET –” switch (4).

NOTE:
- *You can adjust the set speed by 1 km/h or 1 mph by pushing “RES +” switch (3) or “SET –” switch (4) quickly.*
- *You can adjust the set speed by 5 km/h or 5 mph by pushing and holding “RES +” switch (3) or “SET –” switch (4).*
- *If the current vehicle speed exceeds the maximum speed when changing to the slower speed using “RES +” switch (3) or “SET –” switch (4), the speed indication (7) will flash and the buzzer will sound.*

Cancelling speed limiter

- To cancel the speed limiter, push “CANCEL” switch (2). The set indicator (6) will go off.
- To resume the previously set speed, push “RES +” switch (3) and turn on the set indicator (6).

To turn off the speed limiter system, push “LIMIT” switch (1) and check that limit indicator (5) is off.
Also, you can turn off the speed limiter by turning off the engine.

NOTE:
If you turn off the speed limiter system, the previously set speed in the memory is cleared. Set your speed again.

Radar brake support system (if equipped)

Radar brake support system measures the relative velocity of, and distance from, the vehicle in front of you by radar and then attempts to avoid a crash by giving warning and, in the event of a crash, attempts to reduce damage through brake control.

⚠ WARNING

- **Radar brake support system has limits and may not function properly depending on the driving conditions. Do not rely excessively on the system and always drive in a safe manner.**
- **For safety reasons, do not check the operation of the system by yourself.**
- **Check that all passengers fasten their seat belts when the vehicle is being operated.**
  When the system is activated, there is a risk of serious injury from being thrown.

(Continued)

⚠ WARNING

(Continued)

- **On the following surfaces, you may not be able to decelerate even with the warning brake system, the brake assist system and automatic brake system functioning.**
  - **On sharp curves or extremely rough surfaces**
  - **On the following slippery surfaces**
    - **Frozen or snow-covered surfaces**
    - **Over manholes or metal construction plates**
    - **Gravel**
- **In the following situations, the tilt and/or height of the vehicle is changed, the system does not function properly and unexpected accidents may occur.**
  - **With a modified suspension (Altering the vehicle height, etc.)**
  - **With non-specified sized tires equipped**
  - **With worn or extremely uneven tires equipped**
  - **With low or high tire pressure**

NOTE:
- *While the system is working, if a vehicle in front of you moves outside of the radar's detection field or the vehicle can no longer be detected, the system may stop functioning.*
- *While the system is working, a braking sound may be heard even if you do not depress the brake pedal, but this is normal.*

The radar brake support system, model MRR1Plus is in compliance with the essential requirements and other relevant provisions of Directive 1999/5/EC.

Frontal collision warning
When there is a risk of a frontal crash, a warning will be given through the information display and sound.

EXAMPLE

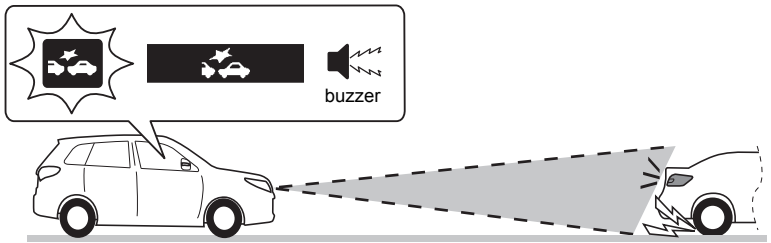

54P000319

Warning brake system
If the driver cannot take or is insufficient to take evasive action such as brake operation and steering operation after frontal collision warning activates, the system applies brake lightly.

EXAMPLE

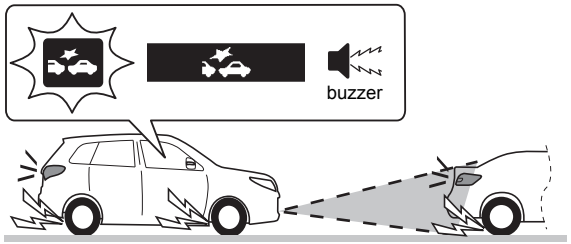

54P000360

⚠ CAUTION

In the following conditions, this warning brake system may not activate.
- **When another vehicle is already parked on a road in the direction of movement.**
- **When a vehicle ahead is changing lane and only a part of the vehicle is within the radar sensor range.**

NOTE:
When you operate brake after frontal collision warning activates, the warning brake system does not activate. Brake assist system will activate in this case.

Brake assist system
When there is high probability of a frontal crash, the brake assist system provides more powerful braking when you slam down on the brake pedal.

EXAMPLE

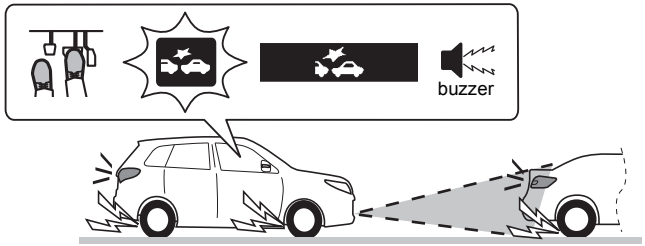

54P000320

Automatic brake system
When a frontal crash is unavoidable at lower speeds, the brakes will powerfully operate automatically. (#1)

EXAMPLE

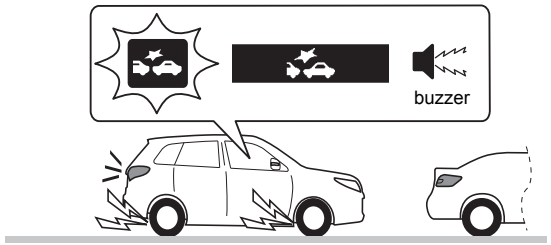

54P000321

(#1) After the vehicle has been stopped by the automatic brake system, flashing of the radar brake support system warning light and frontal collision warning will continue until the brake system is released.

NOTE:
If you do not depress the clutch pedal when the vehicle has been stopped by the automatic brake system, the engine will stall.

Situations where radar will not activate properly

Under the following situations, there is a high possibility that the system will not activate.

- When the engine is off (except when the engine is automatically stopped by the ENG A-STOP system)
- When the gearshift lever is in the reverse gear
- When facing an oncoming vehicle
- When the following switches are pushed and the system is turned off:
  – Radar brake support OFF switch
  – ESP® OFF switch
- When the system is temporarily stopped or malfunctioning, some of the following indicator and messages will come on:
  – The radar brake support system warning light
  – “RADAR BRAKE SUPPORT SYS INSPECTION REQUIRED” message
  – “RADAR BRAKE SUPPORT FCN TEMPORARILY DISABLED” message
  – “RADAR BRAKE SUPPORT: NOT ACTIVE BY SENSOR.” message

Situations where radar may not activate properly

Under the following situations, the radar may not detect a vehicle in front of you correctly and the system may not activate.

- When the radar sensor cover is covered in snow, water or dirt
- When there is bad weather such as heavy rain or fog, a blizzard or sandstorm or when the vehicle in front of you is surrounded by water, snow or sand
- When you are operating on a narrow road
- When another vehicle jumps out suddenly
- When you suddenly accelerate and approach the vehicle in front of you, such as when you overtake the vehicle in front of you
- When swerving
- When the vehicle cannot move in a straight manner without consistently steering, due to an accident or breakdown

EXAMPLE

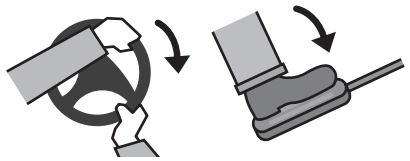

54P000322

- When you take evasive action with the steering wheel or accelerator pedal

EXAMPLE

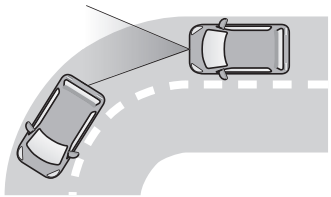

54P000323

- When only a part of the vehicle in front of you is within the radar’s detection field, such as when operating on a curvy road

EXAMPLE

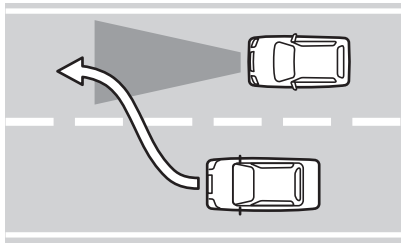

54P000324

- When another vehicle suddenly changes lanes or jumps out in front of you

When the following types of vehicles are in front of you, the radar may not detect them and the system may not activate.

- Stopped vehicles or those operating at extremely low speeds
- Vehicles carrying oddly shaped loads, such as bicycles, on their roof or back, or vehicles with articles protruding out from the body's circumference
- Trucks with low-lying backs

EXAMPLE

54P000325

- Specially shaped vehicles such as car carriers

Situations where radar may activate by chance

With the following objects, the radar may judge that there is a vehicle in front of you, and the system may activate.

EXAMPLE

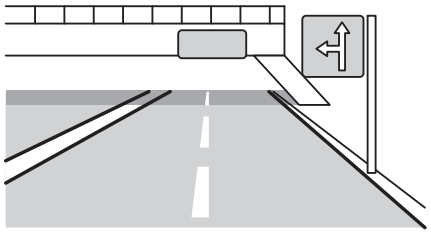

54P000326

- Pedestrian bridges, elevated bridges, overpasses or road signs

EXAMPLE

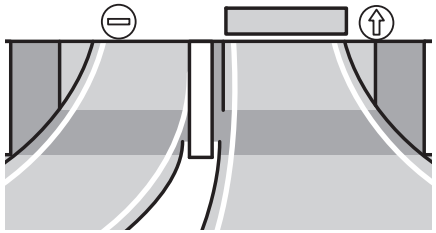

54P000327

- Toll gates, parking lot gates, railroad crossing gates or height-limit signboards

EXAMPLE

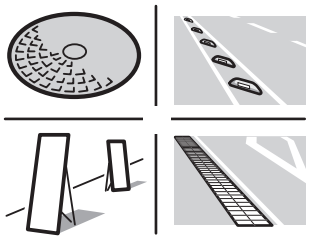

54P000328

- Objects protruding from the road's surface, manhole covers, signs and other metal objects, as well as falling objects or level changes in the road

In the following situations, the radar may judge that there is a vehicle in front of you, and the system may activate.

- When crossing narrow bridges
- When operating on hills that have varying slopes
- When a vehicle suddenly passes you from a neighboring lane
- When the radar detects animals or trees

EXAMPLE

54P000329

- When the radar detects pedestrians, bicycles or motorcycles

EXAMPLE

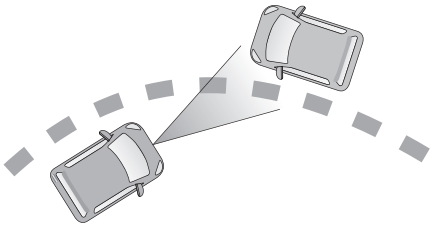

54P000330

- When you pass by an oncoming vehicle on a curvy road

EXAMPLE

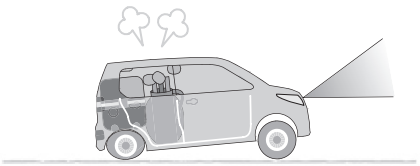

54P000331

- When your vehicle is weighed down by heavy items in the luggage compartment or rear seat

EXAMPLE

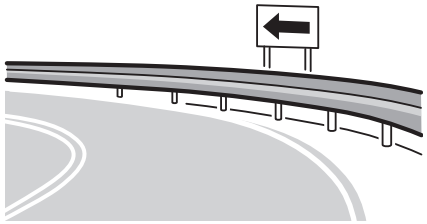

54P000332

- When there is a roadside guard rail, or sign, on a curve

Frontal collision warning

When you are operating at a speed of approximately 5 km/h (3 mph) or over and there is a risk of a frontal crash, a warning will work.

- The interior buzzer will intermittently beep, the radar brake support system warning light (1) will blink rapidly, and the indication (2) will appear.

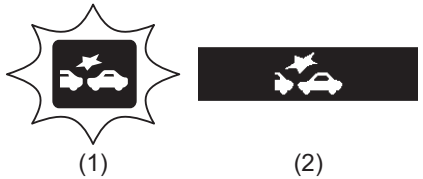

54P000333

- When the frontal collision warning sounds, depending on the distance from the vehicle in front of you and driving conditions, take evasive action with the steering wheel or brake pedal.

FAR/NEAR setting switch

You can change the timing of when the frontal collision warning sounds, while the system is functioning, by using the FAR/NEAR setting switch.

- Given the same relative velocity and distance of the vehicle in front of you, the FAR setting will respond faster than the NEAR setting. We recommend that you normally use the FAR setting.

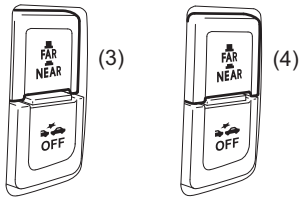

54P000334

- Press the FAR/NEAR setting switch to change the frontal collision warning timing to NEAR (3).
- Press the FAR/NEAR setting switch again to change the frontal collision warning timing back to FAR (4).
- Whenever you press the FAR/NEAR setting switch, the interior buzzer will beep and NEAR or FAR will appear on the information display for several seconds.

⚠ WARNING

If you attempt to press the FAR/NEAR setting switch while driving, you could lose control of the vehicle.

Do not press the FAR/NEAR setting switch while driving.

NOTE:
Even if you switch the frontal collision warning timing, the warning brake system, brake assist system and automatic brake system timing will not change.

Warning brake system

When you are operating at a speed of approximately 30 km/h (19 mph) or over and if the driver cannot take or is insufficient to take evasive action such as brake operation and steering operation after frontal collision warning activates, the system applies brake lightly.

- While the warning brake system is working, the radar brake support system warning light (1) will blink, the indication (2) will appear, and the brake lights will be turned on.

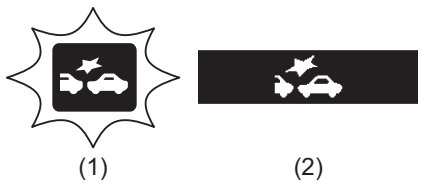

54P000335

⚠ CAUTION

In the following conditions, this warning brake system may not activate.

- When another vehicle is already parked on a road in the direction of movement.
- When a vehicle ahead is changing lane and only a part of the vehicle is within the radar sensor range.

NOTE:
When you operate brake after frontal collision warning activates, the warning brake system does not activate. Brake assist system will activate in this case.

Brake assist system

When you are operating at a speed of approximately 5 km/h (3 mph) or over and there is a high probability of a frontal crash, the brake assist system provides more powerful braking when you slam down on the brake pedal.

- While the brake assist system is working, the radar brake support system warning light (1) will blink rapidly, and the indication (2) will appear.

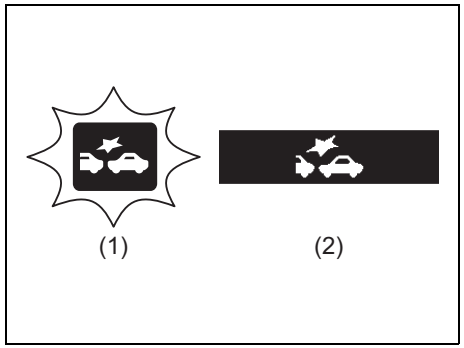

54P000335

Automatic brake system

When a frontal crash is judged to be unavoidable at speeds between approximately 5 km/h to 30 km/h (3 mph to 9 mph), the brakes will powerfully operate automatically and will attempt to avoid the crash or reduce the damage of the crash.

- When the automatic brake system is activated at a speed of approximately 15 km/h (9 mph) or under, crashes may be avoidable.
- While the automatic brake system is working, the radar brake support system warning light (1) will blink rapidly, the indication (2) will appear, and the brake lights will be turned on.

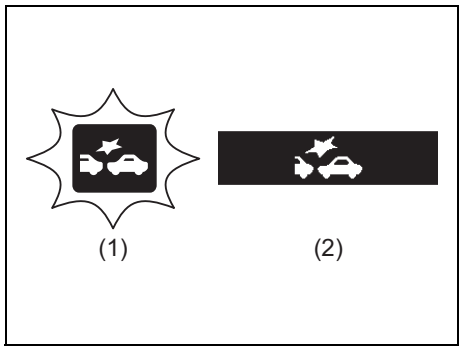

54P000335

Radar brake support OFF switch

You can turn off the radar brake support system.

- In the following situations, push and hold the radar brake support OFF switch as unexpected dangers may be possible if it is activated.
  - When the vehicle is placed upon a tester such as when undergoing a vehicle inspection
  - When the vehicle is being towed
  - When the vehicle is being carried on a car carrier
  - When the vehicle is being carried on a ferry
  - When the vehicle is being operated on a race track
  - When the vehicle is placed upon a car elevator or placed in a mechanical parking lot
  - With a spare tire or tire chains equipped
  - When you have a temporarily repaired flat tire
  - When you have an accident or breakdown
  - When the vehicle is used to tow a trailer

- In the following situations, the radar sensor might not function properly. Turn it off and have it inspected by an authorized SUZUKI dealer.
  - When there is a minor crash and the radar sensor is damaged or hindered
  - When the warning brake system and automatic brake system are activated more than necessary

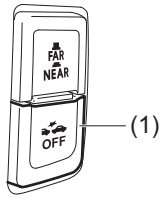

54P000337

54P000336

- When you want to turn off the system, push and hold the radar brake support OFF switch (1) until the interior buzzer beeps and the radar brake support OFF indicator light (2) displays on the instrument cluster.

Perform the following method to turn the system back on.

- Push and hold the radar brake support OFF switch (1) until the interior buzzer beeps and the radar brake support OFF indicator light (2) turns off.
- Turn off the engine and then turn it on again.

⚠ WARNING

If you attempt to press the radar brake support OFF switch while driving, you could lose control of the vehicle.

Do not press the radar brake support OFF switch while driving.

Handling radar sensor

The radar sensor (1) can be found inside the sensor cover (2) which is located on the radiator grill.

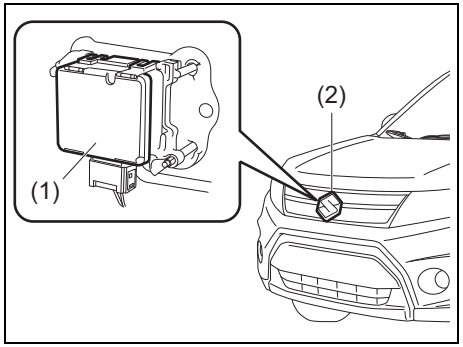

54P000338

If dirt is detected on the radar sensor cover, the radar brake support system will stop functioning and the radar brake support system warning light (3) will come on, and “RADAR BRAKE SUPPORT: NOT ACTIVE BY SENSOR.” message (4) will appear.

54P000340

⚠ WARNING

- **Always keep the sensor cover surface clean. When it is dirty, wipe it down with a soft cloth that will not scratch the cover. Also, when the following things are covering or attached to the sensor cover, they will be detected as dirt and the radar will either take more time to detect things or it will not detect things at all. If this happens, the system will not function normally and unexpected accidents may occur.**
  - **Plastic bags (transparent, semi-transparent, colored or metal-coated)**
  - **Rain, snow, etc.**

- **Observe the following instructions in order to keep the radar sensor functioning properly. If mishandled, the radar sensor cannot accurately detect a vehicle in front of you, the system will not function properly and unexpected accidents may occur.**
  - **Do not strike the radar sensor forcefully. If there is a minor crash and the radar sensor is damaged or hindered, have it inspected by an authorized SUZUKI dealer.**

(Continued)

⚠ WARNING

(Continued)
- **Do not stick or affix anything to the sensor cover, not even clear items.**
- **Do not do any customizing, coating or applying of non-genuine SUZUKI parts to the radiator grill or front bumper. For repairs and parts replacement, contact an authorized SUZUKI dealer.**
- **Do not remove or disassemble the radar sensor or any surrounding parts.**
- **Do not sit on or lean against the front bumper.**
- **When using a high pressure car washer, do not point the nozzle at, or around, the sensor cover.**
- **Do not push other vehicle or objects with the front bumper when you pull out of a parking area.**

NOTE:
The system may not function properly if there is any snow or water on the radar sensor cover.

When dirt is detected on the sensor cover

If the message (4) does not disappear, perform the following procedure.

1) Find a safe place to park and change the ignition switch to “LOCK” position or the ignition mode to “LOCK” (OFF) by pressing the engine switch.
2) Clean the sensor cover with a soft cloth.
3) Change the ignition switch to “ON” position or the ignition mode to “ON” by pressing the engine switch.
4) Check that the message (4) appears for about 3 seconds and then disappears.

- If you clean the sensor cover and drive the vehicle, but the message (4) appears again, there might be another problem. Contact an authorized SUZUKI dealer for further assistance.

NOTE:
In the following situations, the radar brake support system warning light (3) may come on, the message (4) may appear and the radar brake support system may be deactivated automatically, even if there is no dirt on the sensor cover.

- *In a tunnel*
- *A road where there are concrete walls on both sides*
- *A road where there are metal fences on one side*
- *Around overpasses or grade separated crossings*
- *When there is bad weather such as heavy rain or snow*
- *A road where there are puddles*

In these situations, the radar brake support system is stop functioning temporarily, because millimeter-waves emanating from the radar sensor cause diffused reflection and a position of the vehicle in front of you cannot be detected correctly.
If you drive the vehicle for about 2 minutes after the above situations have improved, these indicator and message will turn off and the radar brake support system will turn back on.

Warning and indicator messages

The information display shows the warning and indicator message to let you know about certain problems of the radar brake support system.

Warning and indicator messages

Warning and indicator message	Master warning indicator Light	Sound	Cause and remedy
54P000357	Blinks	Beep (one time from interior buzzer)	There may be a problem with the radar brake support system. Have your vehicle inspected by an authorized SUZUKI dealer.
54P000358	Blinks	Beep (one time from interior buzzer)	There may be a problem with the radar brake support system and the system is disabled temporarily. If the message does not disappear for a while, have your vehicle inspected by an authorized SUZUKI dealer.

Warning and indicator message	Master warning indicator light	Sound	Cause and remedy
RADAR BRAKE SUPPORT: NOT ACTIVE BY SENSOR. 54P000359	Blinks	Beep (one time from interior buzzer)	The radar brake support system is disabled temporarily because dirt is detected on the sensor cover, or millimeter-waves from the radar sensor cause diffused reflection. If the message does not disappear for a while, wipe the sensor cover with a soft cloth.

Emergency stop signal (ESS) (if equipped)

ESS stands for Emergency Stop Signal.

ESS is a feature that gives a warning to a following vehicle by flashing all turn signal lights faster than usual if all the following conditions are met. Also, within these conditions, it will flash along with your turn signal in the instrument cluster.

- When you slam down on the brakes at speeds of approximately 55 km/h (34 mph) or over.
- When the ABS is activated or when you suddenly brake similar to activating the ABS.

EXAMPLE

54P000339

The ESS will stop functioning in the following situations:

- When you release the brake
- When the ABS is no longer activated
- When you turn on the hazard warning switch
- When the car is no longer rapidly decelerating

⚠ WARNING

Although the ESS is designed to reduce the number of rear-end crashes that occur from sudden braking, by warning a following vehicle, it cannot prevent all crashes. Always make an effort to drive safely and avoid unnecessary sudden braking when stopping or decelerating.

NOTE:

- *The ESS feature cannot be deactivated.*
- *Use of the hazard warning switch should be given preference over the ESS.*
- *When driving on the following surfaces and the ABS gives out momentarily, the ESS may not function.*
  - *When driving on slippery surfaces*
  - *When driving over bumps on the road such as highway joint seams*

Parking sensors (if equipped)

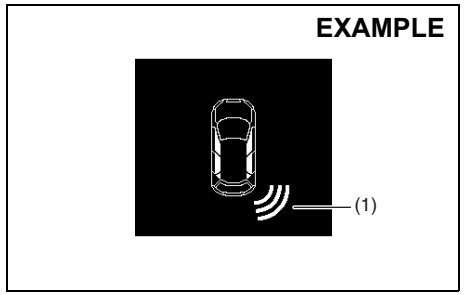

61MM0A192

(1) Symbol representing an obstacle detected by parking sensor*

* This symbol shows that an obstacle is located on the right rear of vehicle.

- The parking sensor system uses ultrasonic sensors to detect obstacles near the front and/or rear bumpers. If obstacles are sensed while you are parking or moving the vehicle slowly, the system warns you by sounding a buzzer and displaying symbols representing the obstacles on the information display in the instrument cluster.
- The system emits an ultrasonic wave and the relevant sensor detects the return of the wave reflected by an obstacle. The system measures the time taken by the ultrasonic wave to reach the obstacle and return from it, from which it determines the obstacle's position.

⚠ WARNING

- **The parking sensor warns you of obstacles with buzzers and by showing you the location of the obstacles on the information display. However, you still have to drive with particular care.**
- **The sensors can detect obstacles only within a limited area and only when the vehicle is moving within a limited speed range. So, in tricky areas, you must move the vehicle slowly while checking around it using your direct vision or rearview mirrors. There is increased risk of an accident if you control the vehicle relying only on the parking sensor.**

Sensor locations (if equipped)

On front bumper

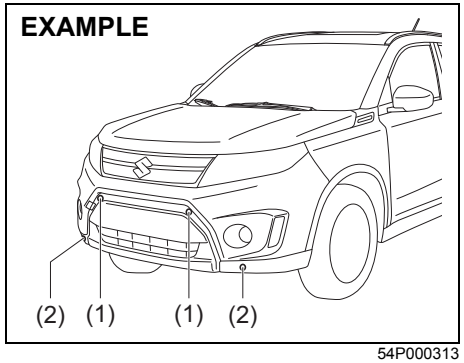

54P000313

(1) Front center sensors (2 places)
(2) Front corner sensors (2 places)

On rear bumper

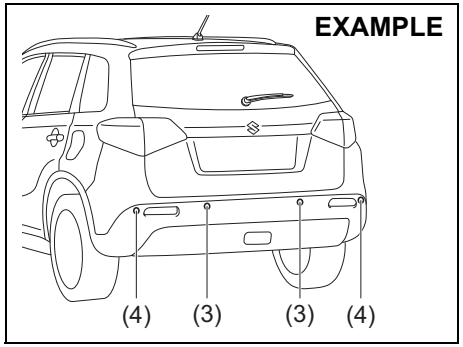

54P000314

(3) Rear center sensors (2 places)
(4) Rear corner sensors (2 places)

NOTICE

- **Avoid hitting the sensor areas or directing the nozzle of a high-pressure car washer onto the sensor areas. Otherwise, the sensors may be damaged.**
- **If the bumper hits a hard object, the sensors on it may not work properly. If this occurs, have the sensors inspected by an authorized SUZUKI dealer.**

Working sensors
The sensors work depending on the gearshift lever position and parking brake lever position as follows:

Gearshift lever position		R	N, 1st – 5th or 6th	Parking brake lever
Front sensors (if equipped)	Center	Off	On	Release
	Corner	On	On	No relation
Rear sensors	Center	On	Off	No relation
	Corner	On	Off	No relation

Approximate areas where obstacles can be detected

EXAMPLE

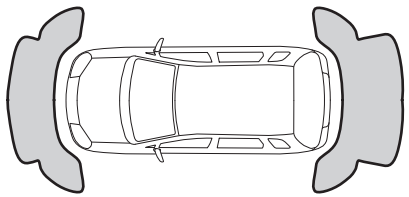

54P000368

- An obstacle within about 20 cm (8 in) from a sensor or just below a sensor is not detectable.
- The sensors can detect an obstacle up to about 1 m (3 ft) from the front of the vehicle, or about 1.5 m (5 ft) from the rear of vehicle.

⚠ WARNING

- **Under the following conditions, the parking sensor system may not work normally because the sensors cannot detect obstacles correctly.**
  - **Sensors are covered with mud, ice or other materials. (Such materials must be removed for normal operation.)**
  - **Sensors are wet from water splashes or heavy rain.**
  - **Sensors are covered by a hand, sticker, accessory, etc.**
  - **There is an accessory or other object attached within the sensor's sensing area.**
  - **Items such as tow hooks, commercially available corner poles, radio antenna, etc. are installed on the bumper.**
  - **The height of the bumper is changed due to alteration to the suspension or other causes.**
  - **The sensor areas are extremely hot from direct sunlight or cold due to freezing weather.**
  - **The vehicle is on a rough surface, slope, gravel road or grass field.**
  - **The vehicle is at a steep angle.**

(Continued)

⚠ WARNING

(Continued)

  - **Sensors have intercepted ultrasonic noise from another vehicle's horn, engine, air braking system (large vehicles), or parking sensor.**
  - **Obstacles are too close to the sensors.**
  - **Sensors are at an angle to a highly reflective object such as glass. (Ultrasonic waves are not reflected back from the obstacle.)**
- **Sensors may not be able to correctly detect the following types of obstacles:**
  - **Objects made of a thin material such as wire netting and ropes**
  - **Square-shaped curbstones or other objects with sharp edges**
  - **Tall objects with a large upper part such as a road sign**
  - **Low-profile objects such as curbstones**
  - **Sound-absorbing objects such as cotton and snow**

NOTE:

- *Thin poles or obstacles lower than the sensors may become undetectable as the vehicle moves closer to them even if they have been detected from longer distances.*
- *The system may calculate the distance to a road sign or similar obstacle to be shorter than the actual distance.*

How to use parking sensor

Parking sensor switch

Models without ESP®

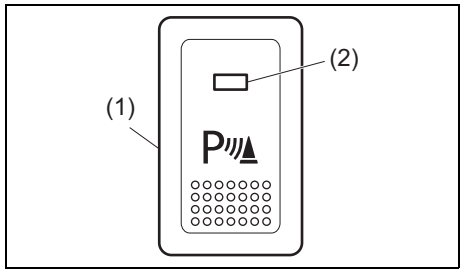

54P000315

(1) Parking sensor switch
(2) Indicator

Models with ESP®

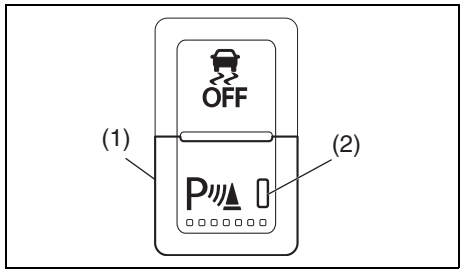

61MM0A102

(1) Parking sensor switch
(2) Indicator

- When the ignition mode is “ON” and the indicator light in the parking sensor switch is on, indicating that the parking sensor is ready for operation under the following conditions:
  – The vehicle’s forward moving speed is not more than approx. 9 km/h (6 mph) when deaccelerating the vehicle such as for parking.
  – The vehicle’s forward moving speed is not more than approx. 13 km/h (9 mph) when accelerating.
- To deactivate the parking sensor, push the parking sensor switch and check that the indicator light goes off.

Switch position	State
EXAMPLE	ON • When the indicator light is on and all necessary conditions are met, system becomes ready for operation.
EXAMPLE	OFF • The system does not operate. Push the switch to turn off the indicator if you do not wish to use the parking sensor.

NOTE:
If you push the parking sensor switch from OFF to ON position when the ignition mode has been changed to “ON” by pressing the engine switch, the interior buzzer sounds.

Obstacle indication by parking sensor

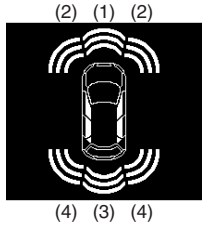

61MM0A194

(1) Obstacle detected by front center sensors (if equipped)
(2) Obstacle detected by front corner sensors (if equipped)
(3) Obstacle detected by rear center sensors
(4) Obstacle detected by rear corner sensors

Upon detecting an obstacle, the parking sensor causes an interior buzzer to sound and a symbol representing the obstacle appears on the information display in the instrument cluster.

- A different symbol is displayed depending on the direction and distance of the obstacle.
- A buzzer in the instrument panel sounds when a sensor at the front (if equipped) detects an obstacle.
- A buzzer located behind the rear seat sounds when a sensor at the rear detects an obstacle.
- Warnings when obstacles are detected by corner sensors

Distance (approx.)	Buzzer	Symbol
37.5 – 60 cm (15 – 24 in)	Short beeps at short intervals	Three lines
25 – 37.5 cm (10 – 15 in)	Short beeps at very short intervals	Two lines
Less than 25 cm (10 in)	Continuous beep	One line

- Warnings when obstacles are detected by center sensors

Distance (approx.)		Buzzer	Symbol
Front (if equipped)	65 – 100 cm (26 – 39 in)	Short beeps at long intervals	Three lines
Rear	65 – 150 cm (26 – 59 in)		
50 – 65 cm (20 – 26 in)		Short beeps at short intervals	
40 – 50 cm (16 – 20 in)		Short beeps at very short intervals	Two lines
Less than 40 cm (16 in)		Continuous beep	One line

NOTE:

- *Symbols are displayed with a short delay after the detection of obstacles.*
- *If the system detects multiple obstacles simultaneously, the display shows all of their positions using the corresponding symbols. However, the buzzers will sound only for the nearest obstacles.*

Set sensors

You can select either the normal or trailer mode of the parking sensor via the information display. Refer to “Information display” in “BEFORE DRIVING” section.

Normal mode
All sensors operate. Use this mode under normal conditions.

Trailer mode
The rear corner and rear center sensors are inhibited from operating. Use this mode when towing a trailer.

NOTICE

Check that the normal mode is selected with the parking sensor when steering the vehicle into a garage. If the parking sensor is left in the trailer mode, the rear corner and rear center sensors are not functioning.

Warning and indicator messages

If there is a problem or warning regarding the parking sensor system, a message is displayed on the information display in the instrument cluster, and a symbol blinks and the buzzer sounds. If a message is displayed, follow its instruction.

Message	Symbol	Buzzer	Probable cause and remedy
P SERVICE PARKING SENSORS	Two blinking lines in a sensor location.	Series of double beeps	There may be a problem with the parking sensor system. Have your vehicle inspected by an authorized SUZUKI dealer.
P CLEAN PARKING SENSORS	One blinking line in a sensor location.	Series of single beeps	The indicated sensor is contaminated. Wipe it clean with a soft cloth.

Rearview camera (if equipped)

When the gearshift lever is shifted to “R” position while the ignition switch is in “ON” position or the ignition mode is “ON”, the rearview camera system automatically shows the view behind the vehicle on the display.

⚠ WARNING

The distance viewed in the rearview camera may differ from the actual distance according to the condition of road or the load the vehicle is carrying. Since the camera display area is also limited, backing up by only looking at the display may cause an accident or a crash with an object.

The rearview camera cannot replace the driver’s attention. The driver alone is responsible for parking and similar driving maneuvers.

- **Use the rearview camera only to provide driving assistance.**
- **Always drive carefully confirming the safety of the rear and the surrounding conditions by looking directly with your eyes and using the rear view mirror.**
- **Check that the tailgate is securely closed when backing up.**

NOTICE

If you use the rearview camera for a long time when the ignition switch is in “ON” position or the ignition mode is “ON”, but the engine is not running, the battery may discharge.

Do not leave the ignition switch in “ON” position or the ignition mode “ON” for a long time when the engine is not running.

Rearview camera location

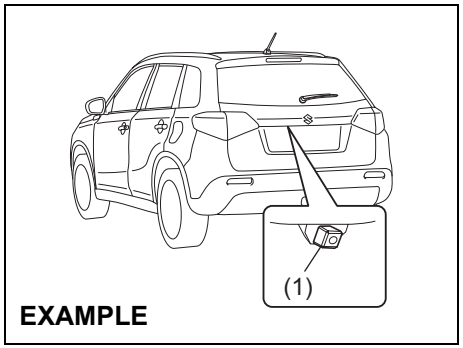

54P000316

(1) Rearview camera

The rearview camera is installed beside the license plate light.

NOTICE

The rearview camera is a precision instrument. If you strike the camera, it may be broken and cause damage resulting in a catch fire or a malfunction.

- **Do not strike the camera.**
- **Do not remove snow or mud on the camera lens with a stick.**

NOTICE

If water enters the rearview camera, it may cause a malfunction or catch fire.

Do not use high pressure water around the camera.

NOTICE

This lens is hard coated to prevent damage or discoloration. Damage or discoloration of lens may obscure the image.

- **Do not use a brush to clean lens.**
- **Do not use alcohol, benzene or thinner to clean the lens.**
- **Do not use wax on the camera lens.**

NOTE:
If body wax gets on the camera lens, wipe off the wax with a clean cloth dampened with mild detergent diluted with water, and then wipe the lens with a dry cloth.

How to use rearview camera

1) Turn the ignition switch to “ON” position or press the engine switch to change the ignition mode to “ON”.
2) Shift the gearshift lever in “R” position.
   - The display automatically shows the view behind the vehicle.
   - When the gearshift lever is shifted from “R” to another gearshift lever position, the display returns to the previous display.

NOTE:
The rearview camera display has first priority in any display mode. However, the rearview camera display does not show the rear view while the system is initializing.

Display range of rearview camera

The rearview camera display shows the area behind the rear end of the tailgate. The display cannot show objects which are close to the bumper or under the bumper.
The rearview camera display cannot show obstacles which are higher than the camera. Upper parts of tall objects such as road signs cannot be viewed on the display.

Display range of rearview camera

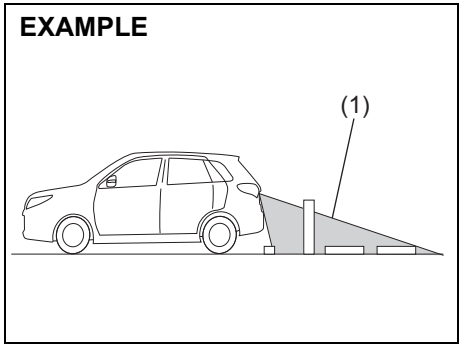

54P000369

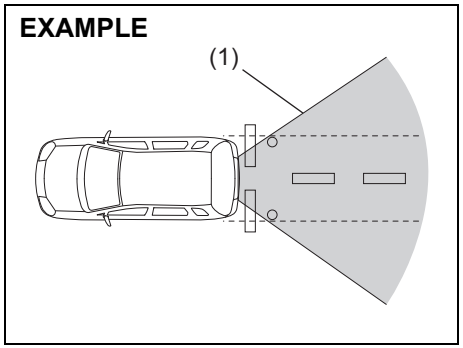

54P000370

(1) Display range

NOTE:
- *Images shown on the display from the rearview camera are reversed images (mirror images).*
- *The colors of objects on the rearview camera may differ from the actual object colors.*
- *The rearview camera display may be difficult to see under the following conditions, but this is not a system malfunction.*
  - *In dark areas, on a rainy day or at night.*
  - *When the temperature around the lens is too high/low, or the camera is wet such as on a rainy day or during periods of high humidity (dew condensation may occur on the camera lens).*
  - *When a foreign object such as mud or a drop of water is stuck around the camera lens.*
  - *When strong light directly enters the camera (vertical lines may be seen on the display).*
  - *Under fluorescent light. (The display may flicker.)*
  - *When the outside temperature is low (the image on the display may be darkened).*

Rearview camera screen indication
The distance viewed in the rearview camera may differ from the actual distance according to the condition of the road or the load the vehicle is carrying.

Uphill incline behind the vehicle

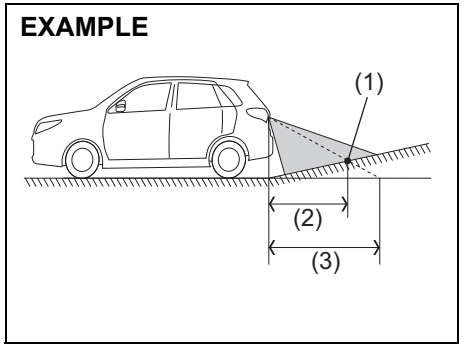

54P000371

(1) Object
(2) Actual distance
(3) Distance on the display

When there is an uphill incline behind the vehicle, the object shown on the display appears farther away than the actual distance.

Downhill incline behind the vehicle

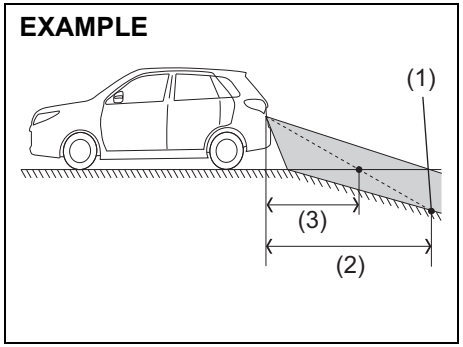

54P000372

(1) Object
(2) Actual distance
(3) Distance on the display

When there is a downhill incline behind the vehicle, the object shown on the display appears closer than the actual distance.

If the rear view from the rearview camera is not shown or there is a poor image

- If the rear view from the rearview camera is not shown.
  - Check that the ignition switch is in “ON” position or the ignition mode is “ON”.
  - Check that the gearshift lever is shifted to “R” position.

- If the image from the rearview camera is poor.
  - Check that the camera lens is not dirty.
  - Check that light from the sun or the beam of the headlights from the vehicle behind is not shining directly into the lens.

If the rearview camera system is still not working properly after checking the above, have the system inspected by an authorized SUZUKI dealer as soon as possible.

Braking

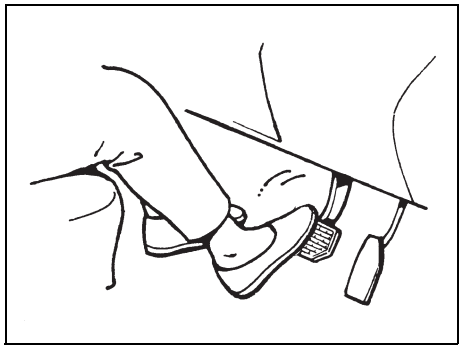

60G165S

The distance needed to bring any vehicle to a halt increases with the speed of the vehicle. The braking distance needed, for example, at 60 km/h (37 mph) will be approximately 4 times greater than the braking distance needed at 30 km/h (19 mph). Start to depress the brake pedal when there is plenty of distance between your vehicle and the stopping point, and slow down gradually.

⚠ WARNING

If water gets into the brake devices, brake performance may become poor and unpredictable. After driving through water or washing the underside of the vehicle, test the brakes while driving at a slow speed to see if they have maintained their normal effectiveness. If the brakes are less effective than normal, dry them by repeatedly applying the brakes while driving slowly until the brakes have regained their normal effectiveness.

Power-assisted brakes

Your vehicle has power-assisted brakes. If power assistance is lost due to a stalled engine or other failures, the system is still fully operational on reserve power and you can bring the vehicle to a complete stop by pressing the brake pedal once and holding it down. The reserve power is partly used up when you depress the brake pedal and reduces each time the pedal is pressed. Apply smooth and even pressure to the pedal. Do not pump the pedal.

⚠ WARNING

Even without reserve power in the brake system, you can still stop the vehicle by pressing the brake pedal harder than normally required. However, the stopping distance may be longer.

Brake assist system

When you slam the brakes on, the brake assist system determines it to be an emergency stop and provides more powerful braking for a driver who cannot hold down the brake pedal firmly.

NOTE:
If you quickly and forcefully depress the brakes, you may hear a clicking sound in the brake pedal. This is normal and indicates that the brake assist system is activated properly.

Anti-lock brake system (ABS)

ABS will help you avoid skidding by electronically controlling braking pressure. It will also help you maintain steering control when braking on slippery surfaces or when braking hard.
The ABS works automatically, so you do not need any special braking technique. Just push the brake pedal down without pumping. The ABS will operate whenever it senses that the wheels are locking up. You may feel the brake pedal move a little while the ABS is operating.

NOTE:
The ABS will not work if vehicle speed is under about 9 km/h (6 mph).

⚠ WARNING

- **On some types of loose surfaces (such as gravel, snow-covered roads, etc.), the stopping distance required for a vehicle with ABS may be slightly greater than the one required for a comparable vehicle with a conventional brake system. With a conventional brake system, skidding tires are able to plow the gravel or snow layer, shortening the stopping distance. ABS minimizes this resistance effect. Allow for extra stopping distance when driving on loose surfaces.**
- **On regular paved roads, some drivers may be able to obtain slightly shorter stopping distances with conventional brake systems than with ABS.**

(Continued)

⚠ WARNING

(Continued)
- **In both of the above conditions, ABS will still offer the advantage of helping you maintain directional control. However, remember that ABS will not compensate for bad road or weather conditions or poor driver judgment. Use good judgment and do not drive too fast.**

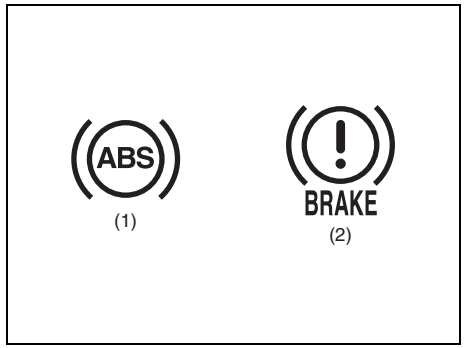

63J081

(1) ABS warning light
(2) Brake system warning light

⚠ WARNING

- **If the ABS warning light (1) on the instrument cluster comes on and stays on while driving, there may be a problem with the ABS system. Ask your SUZUKI dealer to inspect the ABS system immediately. If the ABS system becomes inoperative, the brake system will function as an ordinary brake system that has no ABS.**
- **If the ABS warning light (1) and the brake system warning light (2) on the instrument cluster simultaneously stay on or come on while driving, both anti-lock function and rear brake force control function (proportioning valve function) of the ABS system may have failed. If so, the rear wheels may easily skid or the vehicle can even spin in the worst case when braking on a slippery road or when hard braking even on a dry paved road. Ask your SUZUKI dealer to inspect the ABS system immediately. Drive carefully, avoiding hard braking as much as possible.**

How ABS works

A computer continuously monitors wheel speed. The computer compares the changes in wheel speed when braking. If the wheels slow suddenly, indicating a skidding situation, the computer will change braking pressure several times each second to prevent the wheels from locking. When you start your vehicle or when you accelerate after a hard stop, you may hear a momentary motor or clicking noise as the system resets or checks itself.

⚠ WARNING

The ABS may not work properly if tires or wheels other than those specified in the owner's manual are used. This is because the ABS works by comparing changes in wheel speed. When replacing tires or wheels, use only the size and type specified in this owner's manual.

Electronic stability program (ESP®)

ESP® is a registered trademark of Daimler AG.

The Electronic Stability Program (ESP®) helps to control the vehicle during cornering if front wheels or rear wheels skid. It also assists you in maintaining traction while accelerating on loose or slippery road surfaces. It does this by regulating the engine's output, and by selectively applying the brakes. In addition, ESP® helps to avoid skidding by controlling braking pressure.

⚠ WARNING

The ESP® cannot enhance the vehicle's driving stability in all situations and does not control your vehicle's entire braking system. The ESP® cannot prevent accidents, including those resulting from excessive speed in turns, or hydroplaning. Only safe and attentive drive can prevent accidents. The capabilities of an ESP®-equipped vehicle must never be used as a substitute for careful driving.

The ESP® has the following three systems:

Stability control system

The vehicle stability control system helps provide integrated control of systems such as anti-lock brakes, traction control, engine control, etc. This system automatically controls the brakes and engine to help prevent the vehicle from skidding when cornering on a slippery road surface or when turning the steering wheel abruptly.

Traction control system

The traction control system automatically helps prevent the spinning of wheels when the vehicle is started or accelerated on slippery road surfaces. The system operates only if it senses that some of the wheels are spinning or beginning to lose traction. When this happens, the system operates the front or rear brakes and reduces engine power to limit wheel spin.

NOTE:
You may hear a clunking sound when you start the engine or after the vehicle begins to move. This means that the above systems are in the self-check mode. This sound does not indicate a malfunction.

Anti-lock brake system (ABS)

ABS will help you avoid skidding by electronically controlling braking pressure. It will also help you maintain steering control when braking on slippery surfaces or when braking hard. The ABS works automatically, so you do not have to use any special braking technique. Just push the brake pedal down without pumping. The ABS will operate whenever it senses that wheels are locking up. You may feel the brake pedal pulsate while the ABS is operating.
(For more information on ABS, see “Braking” in this section.)

NOTE:
If the ABS system is activated, you may hear a clunking noise and/or feel pulsating in the brake pedal. This is normal and indicates that the brake fluid pressure is being controlled properly.

⚠ WARNING

- **The ESP® may not work properly if tires or wheels other than those specified in the owner’s manual are used. When replacing tires or wheels, use only the size and type specified in this owner’s manual.**
- **The ESP® may not work properly if tires are not inflated to the recommended tire inflation pressure.**
- **The ESP® may not work properly if tires are fitted with tire chains.**
- **The ESP® may not work properly if the tires are excessively worn. Replace tires when the tread wear indicators in the grooves appear on the tread surface.**
- **The ESP® is not a substitute for winter tires or tire chains on a snow-covered road.**

⚠ WARNING

- **The ESP® may not work properly if engine related parts such as the muffler are not equivalent to standard equipment or are extremely deteriorated.**
- **Do not modify the vehicle’s suspension since the ESP® may not work properly.**

The ESP® indicator lights are described below:

ESP® warning light

52KM133

This light blinks 5 times per second when one of the following systems is activated.
- Stability control system
- Traction control system
- Hill descent control system (if equipped)

If this light blinks, drive carefully.

When the ignition switch is turned to “ON” position, or the engine switch is pressed to change the ignition mode to “ON”, this light comes on briefly so you can check that the light is working.

NOTICE
If the ESP® warning light comes on and stays on while driving, there may be a malfunction of the ESP® systems (other than ABS). You should have the systems inspected by an authorized SUZUKI dealer.

NOTE:
When the ESP® warning light comes on and stays on while driving, indicating a malfunction of the ESP® systems (other than ABS), the brake system will function as an ordinary ABS with no additional ESP® functions.

ESP® OFF indicator light

57L30045

You should turn the ESP® on during your ordinary driving, so that you have the benefits of all of the ESP® systems.

It may be required to turn the ESP® systems (other than ABS) off if your vehicle is stuck in sand, mud, or snow, where wheel spin is necessary.

ESP® OFF switch

Models without parking sensors

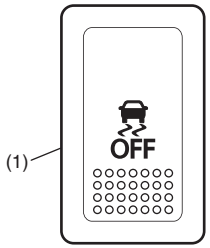

61MM0A197

(1) ESP® OFF switch

Models with parking sensors

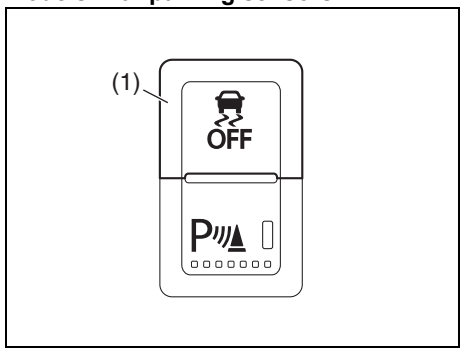

61MM0A105

(1) ESP® OFF switch

When the ESP® OFF switch located at the instrument panel is pushed and held to turn off the ESP® systems (other than ABS), the ESP® OFF indicator light in the instrument cluster comes on.
When you have turned the ESP® systems (other than ABS) off, turn them back on before resuming ordinary driving.
When you push the ESP® OFF switch again, the ESP® OFF indicator light will go out and all of the ESP® systems will be activated.

61MM0A178

If the message shown in the above illustration appears on the information display, there may be a problem with the ESP® system. Have your vehicle inspected by an authorized SUZUKI dealer.

NOTE:
The ESP® system will not activate while this message is displayed.

NOTE:
If your vehicle is equipped with the radar brake support system, when the ESP® system is turned off, the radar brake support system will be turned off.

ABS warning light / brake system warning light

See “Braking” in this section.

Hill descent control system (if equipped)

The hill descent control system is designed to reduce the driver’s workload when going down steep, rough and/or slippery hills where the vehicle cannot decelerate enough by engine braking alone. The hill descent control system helps to control vehicle speed by automatically engaging the vehicle’s brakes, as needed, so you can concentrate on steering the vehicle.

⚠ WARNING

Do not rely excessively on the hill descent control system. The hill descent control system may not control the vehicle speed on a hill under all load or road conditions. Always be prepared to control vehicle speed by applying the brakes. Failure to pay attention and control vehicle speed using the brakes when necessary may result in loss of control or an accident.

Hill descent control switch

Models without ENG A-STOP system

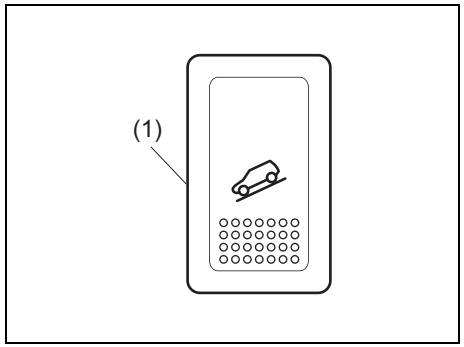

54P000317

(1) Hill descent control switch

Models with ENG A-STOP system

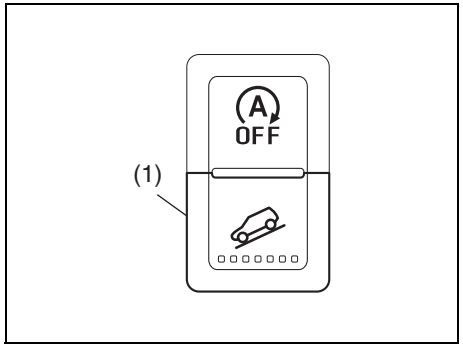

54P000318

(1) Hill descent control switch

To activate the hill descent control system:

1) Turn the driving mode switch (if equipped) to “LOCK” position.
2) Shift the gearshift lever into a forward gear or reverse gear.
3) Push the hill descent control switch (1) when the vehicle speed is under 25 km/h (15 mph). The hill descent control indicator on the instrument cluster will come on and the hill descent control system will be activated.

If the driving mode switch (if equipped) is in “LOCK” position, vehicle speed is maintained at approximately 10 km/h (6 mph) when going down a hill.

The brake/tail lights come on and the ESP® warning light blinks while the hill descent control system applies the brakes to maintain the vehicle speed.
If the accelerator or brake pedal is depressed while the hill descent control system is activated, the system will stop working temporarily. As soon as the accelerator or brake pedal is released, the hill descent control system begins to function again if the hill descent control operating conditions are fulfilled. However, when the vehicle speed exceeds 25 km/h (15 mph), the hill descent control system will be deactivated automatically.

To deactivate the hill descent control system, push the hill descent control switch again.

⚠ WARNING

- **When the hill descent control system is used continuously for a long time, the temperature of the brake system may increase and the hill descent control system may be deactivated temporarily to protect the device of the brake system. The hill descent control indicator blinks to let you know the system is deactivated. Depress the brake pedal and stop the vehicle in a safe place. When the temperature of the brake system goes down, the hill descent control indicator will come on and the system is activated again.**
- **The hill descent control system may be activated when the gearshift lever is in "N" (Neutral) position, but engine braking will not work. Always use the hill descent control system with the gearshift lever in a forward gear or reverse gear.**

NOTE:
You may hear a sound coming from the engine when the hill descent control system is activated. This sound is normal and does not indicate a malfunction.

Hill descent control indicator light

79K050

When the ignition switch is in "ON" position, or the ignition mode is "ON", this light comes on briefly so you can check that the light is working.

When you push the hill descent control switch and the hill descent control operating conditions are fulfilled, the hill descent control indicator comes on. If the hill descent control indicator blinks, the hill descent control will not be activated.

If hill descent control indicator light comes on or blinks, while not operating the hill descent control switch, there is a problem in this system. Have your vehicle inspected by an authorized SUZUKI dealer.

NOTE:
If the hill descent control indicator blinks when you push the hill descent control switch, the following conditions may not be fulfilled.

- *The driving mode switch (if equipped) is in "LOCK" position*
- *The gearshift lever is in a forward gear or reverse gear*
- *The vehicle speed is under 25 km/h (15 mph)*
- *The brake system is under normal operating temperature*

NOTE:
If any of the following conditions occur, there may be a problem with the hill descent control system or the ESP® system. Have your vehicle inspected by an authorized SUZUKI dealer.
- *The hill descent control indicator does not come on or blink when you push the hill descent control switch.*
- *The hill descent control indicator stays on when driving without pushing the hill descent control switch.*

61MM0A179

If the message shown in the above illustration appears on the information display, there may be a problem with the hill descent control system and the hill hold control system. Have your vehicle inspected by an authorized SUZUKI dealer.

NOTE:
You cannot activate the hill descent control system while this message is displayed.

Hill hold control system (if equipped)

The hill hold control system is designed to assist you in starting to move up steep or slippery hills. When you start to move up a hill, the system helps to prevent the vehicle from rolling downward (for approximately 2 seconds) while you move your foot from the brake pedal to the accelerator pedal.

⚠ WARNING

- **Do not rely excessively on the hill hold control system. The hill hold control system may not prevent the vehicle from rolling downward on a hill under all load or road conditions. Always be prepared to depress the brake pedal to prevent the vehicle from rolling downward. Failure to pay attention and depress the brake pedal to hold the vehicle on a hill when necessary, may result in loss of control or an accident.**
- **The hill hold control system is not designed to stop the vehicle on a hill.**

(Continued)

⚠ WARNING

(Continued)
- **After you release your foot from the brake pedal, accelerate the vehicle to move up immediately. If you release your foot from the brake pedal over 2 seconds, the hill hold control system will be canceled. If so, the vehicle may roll downward, which can result in an accident depending on the degree of slope. And, the engine may stall and the power assist for the steering and brakes will not work so steering and braking will be much harder than usual which can result in an accident or vehicle damage.**

The hill hold control system activates for a maximum of about 2 seconds if your foot is moved from the brake pedal when the following conditions are all met.

1) The gearshift lever is in a forward gear or reverse gear.
2) The parking brake is released.
3) The clutch pedal is depressed.
4) The vehicle is on an upward incline.

NOTE:
You may hear a sound coming from the engine when the hill hold control system is activated. This sound is normal and does not indicate a malfunction.

61MM0A179

If the message shown in the above illustration appears on the information display, there may be a problem with the hill descent control system (if equipped) and the hill hold control system. Have your vehicle inspected by an authorized SUZUKI dealer.

NOTE:
The hill hold control system will not activate while this message is displayed.

Tire pressure monitoring system (TPMS) (if equipped)

The tire pressure monitoring system is designed to alert you when one or more of the tires on your vehicle is significantly under-inflated. The tire pressure monitoring system (TPMS) sensor containing a unique identification code is mounted on each wheel. The TPMS sensors transmit tire pressure signals to the receiver of the tire pressure monitoring system controller. When the inflation pressure of one or more tires indicates significant under-inflation, the low tire pressure warning light shown below comes on.

NOTE:
The word “telltale” in this section, means an indicator.

Low tire pressure warning light

52D305

Each tire, including the spare (if provided), should be checked monthly when cold and inflated to the inflation pressure recommended by the vehicle manufacturer on the vehicle placard or tire inflation pressure label. (If your vehicle has tires of a different size than the size indicated on the vehicle placard or tire inflation pressure label, you should determine the proper tire inflation pressure for those tires.)
As an added fuel efficiency feature, your vehicle has been equipped with a tire pressure monitoring system (TPMS) that illuminates a low tire pressure telltale when one or more of your tires is significantly under-inflated.
Accordingly, when the low tire pressure telltale illuminates, you should stop and check your tires as soon as possible, and inflate them to the proper pressure.
Driving on a significantly under-inflated tire causes the tire to overheat and can lead to tire failure. Under-inflation also reduces fuel efficiency and tire tread life, and may

affect the vehicle's handling and stopping ability.
Please note that the TPMS is not a substitute for proper tire maintenance, and it is the driver's responsibility to maintain correct tire pressure, even if under-inflation has not reached the level to trigger illumination of the TPMS low tire pressure telltale.

⚠ WARNING

Relying only on the tire pressure monitoring system to determine when it is necessary to add air to the tires can result in loss of control or an accident.

Check tire inflation pressures monthly when the tires are cold. If necessary, adjust them to the recommended inflation pressure as specified on the vehicle's tire information placard and in this owner's manual. Refer to "Tires" in "INSPECTION AND MAINTENANCE" section.

⚠ WARNING

Failure to take corrective action when the low tire pressure warning light is not working or when it comes on and blinks while driving can lead to an accident.

If the low tire pressure warning light does not come on for 2 seconds after the ignition switch is turned to "ON" position or the engine switch is pressed to change the ignition mode to "ON", or comes on and blinks while driving, have your vehicle inspected by an authorized SUZUKI dealer. Even if the light turns off after blinking, indicating that the monitoring system has recovered, you should still have the system checked by your authorized SUZUKI dealer.

⚠ WARNING

The load-carrying capacity of your tires is reduced at lower inflation pressures. If your tires are even moderately under-inflated, the load on the tires may exceed the load-carrying capacity of the tires, which could lead to tire failure. The low tire pressure warning light will not alert you to this condition, because it only comes on when one or more of your tires becomes significantly under-inflated.

Check and adjust your tire inflation pressure at least once a month. Refer to "Tires" in "INSPECTION AND MAINTENANCE" section.

⚠ WARNING

Continuing to drive with the low tire pressure warning light on can lead to an accident, resulting in severe injury or death.

If the low tire pressure warning light comes on and stays on, reduce your speed and avoid abrupt steering and braking. Be aware that driving on a significantly under-inflated tire can cause the tire to overheat and can lead to tire failure, and may affect steering control and brake effectiveness. Stop in a safe place as soon as possible and check your tires.

- **If you have a flat tire, replace it with the spare tire (if equipped). Refer to "Jacking instructions" in "EMERGENCY SERVICE" section for tire replacement. Also refer to "Replacing tires and/or wheels" for instructions on how to restore normal operation of the TPMS after you have had a flat tire.**

(Continued)

⚠ WARNING

(Continued)

- **If your vehicle is equipped with a flat tire repair kit instead of a spare tire, refer to "Flat tire repair kit" in "EMERGENCY SERVICE" section for instructions on how to perform an emergency repair of a flat tire.**
- **If one or more of your tires is under-inflated, adjust the inflation pressure in all of your tires to the recommended inflation pressure as soon as possible.**

The low tire pressure warning light can come on due to normal causes such as natural air leakage and pressure changes caused by changes in temperature or atmospheric pressure. Adjusting the air pressure in the tires to the pressure shown on the tire information placard should cause the low tire pressure warning light to turn off.

To make the low tire pressure warning light go off, adjust the tire pressures when the tires are cold, and drive the vehicle for about 10 minutes.
When the adjusted tire pressure is recognized, the low tire pressure warning light will go off and the information display shows the current tire pressure (if you select the TPMS monitor).

NOTICE

If the low tire pressure warning light does not go off even when you drive for more than 10 minutes after adjusting the cold tire pressure, there may be a problem with the TPMS. Have your vehicle inspected by an authorized SUZUKI dealer.

If the light turns on again shortly after adjusting the pressure in your tires, you may have a flat tire. If you have a flat tire, replace it with the spare tire (if equipped). Refer to "Jacking instructions" in "EMERGENCY SERVICE" section. Refer to "Replacing tires and/or wheels" for instructions on how to restore normal operation of the tire pressure monitoring system after you have had a flat tire.

61MM0A198

NOTE:

- *The information display shows the above warning and indicator message when this light comes on.*
- *When the tire inflation pressure is adjusted in high altitude areas, the low tire pressure light may not turn off even after tire inflation pressure adjustment. In this case, adjust the inflation pressure to a slightly higher pressure than the one shown on the tire information placard.*
- *The low tire pressure warning light may turn off temporarily after coming on. This could be due to increase of surface temperature after long distance driving or traveling to a high temperature area. Even if the tire pressure warning light turns off after coming on, check the inflation pressure of all tires.*
- *To reduce the chance that the low tire pressure warning light will come on due to normal changes in temperature and atmospheric pressure, it is important to check and adjust the tire pressures when the tires are cold. If you check tires after driving, they are warm. Even if the tire pressure seems to be good in this condition, it could fall below the specified pressure when tires cool down. Also, if tires are inflated to the specified pressure in a warm garage, the tire pressure could fall below the specified one when you drive the vehicle outside in very cold temperature. If you adjust the tire pressure in a garage that is warmer than the outside temperature, you should add 1 kPa to the recommended cold tire inflation pressure for every 0.8°C difference between garage temperature and outside temperature.*

TPMS malfunction indicator

Your vehicle has also been equipped with a TPMS malfunction indicator to indicate when the system is not operating properly.

The TPMS malfunction indicator is combined with the low tire pressure telltale. When the system detects a malfunction, the telltale will flash for about 75 seconds and then remain continuously illuminated. This sequence will continue upon subsequent vehicle start-ups as long as the malfunction exists.

The TPMS malfunction indicator is not reset even after the engine is turned off; it remains in the on state until the normal conditions are restored.

When the malfunction indicator is illuminated, the system may not be able to detect or signal low tire pressure as intended. TPMS malfunctions may occur for a variety of reasons, including the installation of replacement or alternate tires or wheels on the vehicle that prevent the TPMS from functioning properly. Always check the TPMS malfunction telltale after replacing one or more tires or wheels on your vehicle to ensure that the replacement or alternate tires and wheels allow the TPMS to continue to function properly.

NOTICE

The tire pressure sensors can be damaged if you do not take proper precautions.

- **We highly recommend that you have tires repaired or replaced by an authorized SUZUKI dealer. The tire pressure sensors can be damaged by installation or removal of tires.**
- **Do not use liquid sealants for a flat tire unless your vehicle is equipped with a flat tire repair kit instead of a spare tire.**

NOTICE

If the low tire pressure warning light comes on frequently, there may be something wrong with one or more of the tires, tire pressure sensors, or the monitoring system.

If the low tire pressure warning light comes on frequently, have your vehicle inspected by an authorized SUZUKI dealer.

61MM0A199

NOTE:
The information display shows the above warning and indicator message when this light comes on.

TPMS limitations

The tire pressure monitoring system may not function properly under certain circumstances. In the following situations, the low tire pressure warning light may come on and remain on or may blink.

- When you replace a flat tire with the spare tire.
- When you include a spare tire during a tire rotation.
- When the TPMS sensor is damaged during a tire replacement or liquid sealants are used to repair a flat tire.
- When the TPMS sensor's electronic signal is disturbed in one of the following ways:
  - Electric devices or facilities using similar radio wave frequencies are nearby.
  - A metallic film that may cause radio wave interference is attached on the window.
  - A lot of snow or ice covers the vehicle, in particular, around the wheels or wheel housings.
  - Snow tires that are not installed with genuine TPMS sensors or tire chains are used.
- When you use non-genuine SUZUKI wheels or tires.
- When the pressure of any tire is too high.
- When there is a problem with the receiver of the TPMS controller.

TPMS setting

- You can check the current tire inflation pressure on the information display.
- You can set one of the initial value of tire pressure below that is indicated on the tire information label.
  - Comfort Mode
  - Eco Mode
  - Load Mode

⚠ WARNING

When the loading weight has changed, adjust the tire pressure according to the tire information label and set the initial value via the information display. If the loading weight, tire pressure and initial value do not match, the tire pressure monitoring system will not function properly.

To check the current tire inflation pressure

EXAMPLE

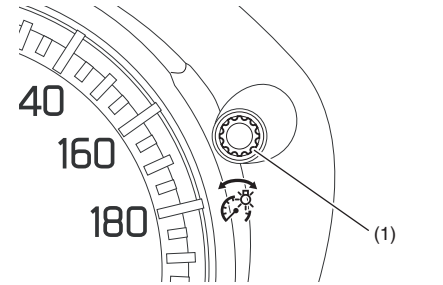

61MM0A156

1) When the ignition switch is in “ON” position or the ignition mode is “ON” and the vehicle is stationary, push and hold the indicator selector knob (1) on the instrument cluster for more than 3 seconds to change the information display to the setting mode.

EXAMPLE

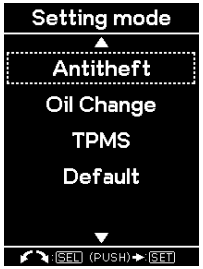

61MM0A231

2) Turn the indicator selector knob (1) left or right to select “TPMS” and push the indicator selector knob.

NOTE:
If you exit the setting mode, select “Back” and push the indicator selector knob (1).

EXAMPLE

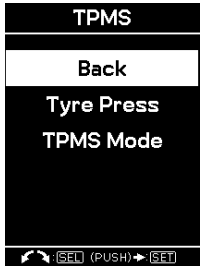

61MM0A232

3) Turn the indicator selector knob (1) left or right to select “Tyre Press” and push the indicator selector knob.

EXAMPLE

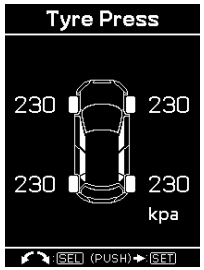

61MM0A233

4) The display shows current tire inflation pressure.

NOTE:

- *If the low tire pressure warning light comes on, the information display will be switched to “Type Press” display and the corresponding tire pressure indication blinks to alert you which tire(s) is(are) low pressure.*
- *The display may not show the tire inflation pressure for about 10 minutes after the vehicle begins to move. This is because the TPMS system learns the tire inflation pressure within this 10 minutes. The display will show the tire inflation pressure after 10 minutes passed.*
- *If you stop the vehicle and turn the ignition switch to “LOCK” position or change the ignition mode to “LOCK” (OFF), and leave it for 20 minutes or more, tire pressure will be reset and will be indicated as 0 kPa when the engine is restarted. In this case, the current tire pressure indication will recover after driving for a while. However, if any of tire pressures has been detected as low pressure before stopping the engine, the tire pressure indication may not recover and may be indicated as “---”.*

To set the initial value of tire pressure

EXAMPLE

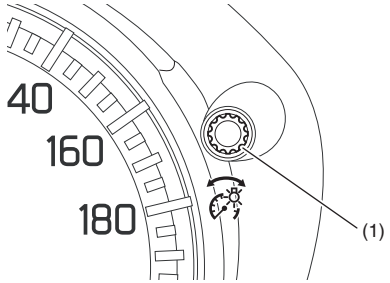

61MM0A156

1) When the ignition switch is in “ON” position or the ignition mode is “ON” and the vehicle is stationary, push and hold the indicator selector knob (1) on the instrument cluster for more than 3 seconds to change the information display to the setting mode.

EXAMPLE

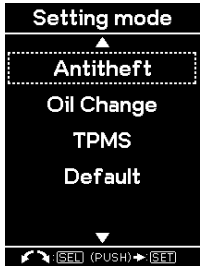

61MM0A231

2) Turn the indicator selector knob (1) left or right to select “TPMS” and push the indicator selector knob.

NOTE:
If you exit the setting mode, select “Back” and push the indicator selector knob (1).

EXAMPLE

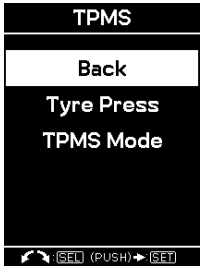

61MM0A232

3) Turn the indicator selector knob (1) left or right to select “TPMS Mode” and push the indicator selector knob.

EXAMPLE

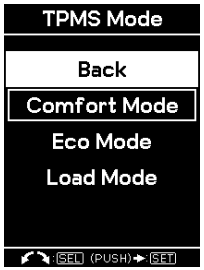

61MM0A234

4) Turn the indicator selector knob (1) left or right to select the initial value and push the indicator selector knob.

61MM0A235

5) When the display shows the message shown in the above illustration, the setting is completed.

Replacing tires and/or wheels

If you got a flat tire and replaced it with the spare tire, SUZUKI recommends that you have an authorized SUZUKI dealer mount a new tire on the wheel that had the flat tire. The TPMS is already set up to recognize the ID code of the original wheel, and normal TPMS operation will be restored.

If you need to replace any wheels on your vehicle, your dealer must check that TPMS sensors are installed in the new wheels and must set up the TPMS to recognize the new sensors.

NOTE:
A TPMS sensor is not installed in the spare tire. You should use the spare tire only in an emergency situation, and should replace the spare tire as soon as possible to restore normal TPMS operation.

⚠ WARNING

Use of tires or wheels not recommended by SUZUKI can result in failure of the TPMS.

When replacing tires and wheels, use only tires and wheels recommended by SUZUKI as standard or optional equipment for your vehicle. Refer to "Tires" in "INSPECTION AND MAINTENANCE" section for additional information.

The tire pressure monitoring system, transmitter model S180052024 and receiver model 40398036 are in compliance with the essential requirements and other relevant provisions of Directive 1999/5/EC.

MEMO

MEMO

DRIVING TIPS

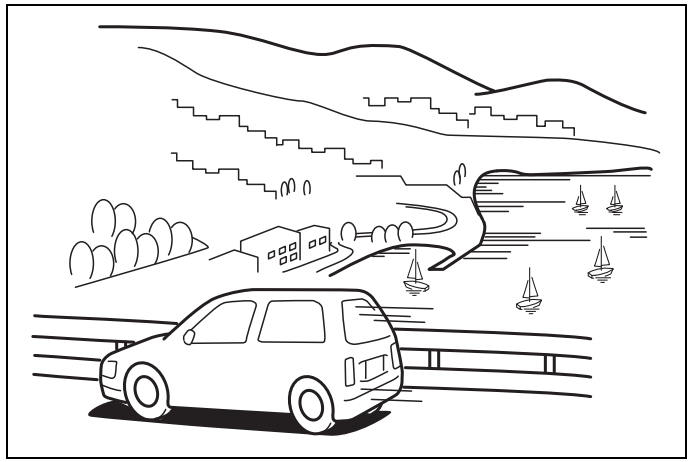

60G409

Running-in 4-1
Catalytic converter 4-1
Improving fuel economy 4-2
Highway driving 4-3
Driving on hills 4-3
Driving on slippery roads 4-4

52D078S

⚠ WARNING

- **Fasten your seat belts at all times. Even though air bags are equipped at the front seating positions, the driver and all passengers should be properly restrained at all times, using the seat belts provided. Refer to "Seat belts and child restraint systems" section for instructions on proper use of the seat belts.**
- **Never drive under the influence of alcohol or other drugs. Alcohol and drugs can seriously impair your ability to drive safely, greatly increasing the risk of injury to yourself and others. You should also avoid driving when you are tired, sick, irritated or under stress.**

Running-in

NOTICE

The future performance and reliability of the engine depends on the care and restraint exercised during its early life. It is especially important to observe the following precautions during the first 960 km (600 miles) of vehicle operation.

- **After starting, do not race the engine. Warm it up gradually.**
- **Avoid prolonged vehicle operation at a constant speed. Moving parts will break in better if you vary your speed.**
- **Start off from a stop slowly. Avoid full throttle starts.**
- **Avoid hard braking, especially during the first 320 km (200 miles) of driving.**
- **Do not drive slowly with the transaxle in a high gear.**
- **Drive the vehicle at moderate engine speeds.**
- **Do not tow a trailer during the first 960 km (600 miles) of vehicle operation.**

Catalytic converter

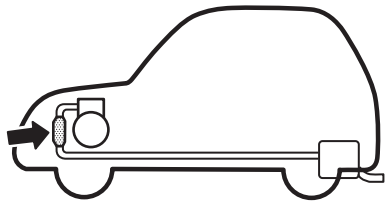

80G106

The purpose of the catalytic converter is to minimize the amount of harmful pollutants in your vehicle's exhaust. Use of leaded fuel in vehicles equipped with catalytic converters is prohibited, because lead deactivates the pollutant-reducing components of the catalyst system.

The converter is designed to last the life of the vehicle under normal usage and when unleaded fuel is used. No special maintenance is required on the converter. However, it is very important to keep the engine properly tuned. Engine misfiring, which can result from an improperly tuned engine, may cause overheating of the catalytic converter. This may result in permanent

heat damage to the catalytic converter and other vehicle components.

NOTICE

To minimize the possibility of catalytic converter or other vehicle damage:

- **Maintain the engine in the proper operating condition.**
- **In the event of an engine malfunction, particularly one involving engine misfire or other apparent loss of performance, have the vehicle serviced promptly.**
- **Do not turn off the engine or interrupt the ignition when the transaxle is in gear and the vehicle is in motion.**
- **Do not try to start the engine by pushing or towing the vehicle, or coasting down a hill.**
- **Do not idle the engine with any spark plug wires disconnected or removed, such as during diagnostic testing.**
- **Do not idle the vehicle for prolonged periods if idling seems rough or there are other malfunctions.**
- **Do not allow the fuel tank to get near the empty level.**

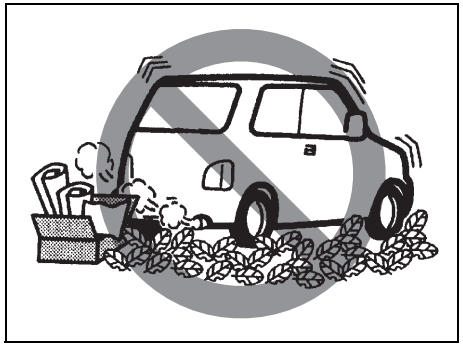

54G584S

⚠ WARNING

Be careful where you park and drive; the catalytic converter and other exhaust components can get very hot. As with any vehicle, do not park or operate this vehicle in areas where combustible materials such as dry grass or leaves can come in contact with a hot exhaust system.

Improving fuel economy

The following instructions will help you improve fuel economy.

Avoid excessive idling
If you park your vehicle for more than one minute, stop the engine and start it again later. When warming up a cold engine, allow the engine to idle until the temperature gauge pointer comes up to “C” position (if the idling is not prohibited). In this position, the engine is sufficiently warm for starting off.

Avoid fast starts
Fast starts away from lights or stop signs will consume fuel unnecessarily and shorten engine life. Start off slowly.

Avoid unnecessary stops
Avoid unnecessary deceleration and stopping. Try to maintain a slow, steady speed whenever possible. Slowing down and then accelerating again uses more fuel.

Keep a steady cruising speed
Drive at a constant speed that road and traffic conditions will permit.

Keep the air cleaner clean

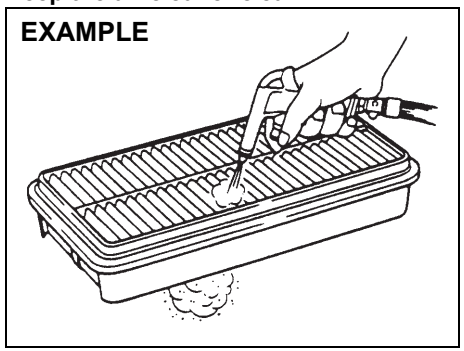

60A183S

If the air cleaner is clogged with dust, there will be greater intake resistance, resulting in decreased power output and increased fuel consumption.

Keep weight to a minimum
The heavier the load is, the more fuel the vehicle consumes. Unload any unnecessary luggage or cargo.

Keep tire pressures correct
Under-inflation of the tires can waste fuel due to increased running resistance of the tires. Keep your tires inflated to the correct pressure shown on the label on the driver's side door or the driver's door lock pillar.

Highway driving

When driving at highway speeds, pay attention to the following:

- Stopping distance progressively increases with vehicle speed. Apply the brakes far enough ahead of the stopping point to allow for the extra stopping distance.
- On rainy days, hydroplaning can occur. Hydroplaning is the loss of direct contact between the road surface and the vehicle's tires due to a water film forming between them. Steering or braking the vehicle during hydroplaning can be very difficult, and loss of control can occur. Keep speed down when the road surface is wet.
- At high speeds, the vehicle may be affected by side winds. Therefore, reduce speed and be prepared for unexpected buffeting, which can occur at the exits of tunnels, when passing by a cut of a hill, or when being overtaken by large vehicles, etc.

Driving on hills

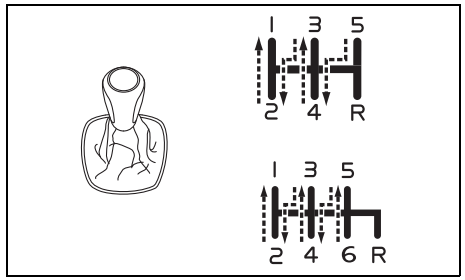

54P000401

- When climbing steep hills, the vehicle may begin to slow down and show a lack of power. If this happens, you should shift to a lower gear so that the engine will again be operating in its normal power range. Shift rapidly to prevent the vehicle from losing momentum.
- When driving down a hill, the engine should be used for braking by shifting to the next lower gear.

⚠ WARNING

Do not hold the brake pedal down too long or too often while going down a steep or long hill. This could cause the brakes to overheat, resulting in reduced braking efficiency. Failure to take this precaution could result in loss of vehicle control.

NOTICE

When descending a downhill, Never turn the ignition key to "LOCK" position or press the engine switch to change the ignition mode to "LOCK" (OFF). Emission control system damage may result.

Driving on slippery roads

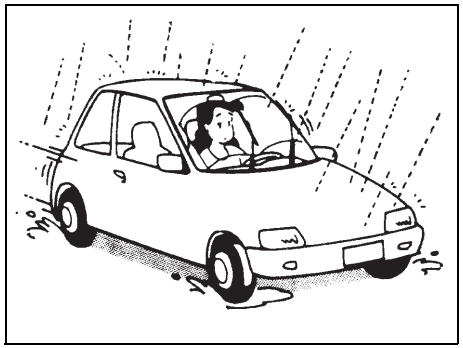

60G089S

On wet roads, you should drive at a lower speed than you do on dry roads due to possible slippage of tires during braking. When driving on icy, snow-covered or muddy roads, reduce your speed and avoid sudden acceleration, abrupt braking, or sharp steering movements.

Four-mode 4WD models
Your four-mode 4WD is designed to get better traction on slippery roads than 2-wheel drive models. However, your four-mode 4WD will not have as much traction in deep snow, mud or sand as multipurpose 4WD vehicles. You should not attempt to drive your four-mode 4WD in deep snow, mud or sand. Four-mode 4WD models are not sport/utility vehicles, and are not designed for off-road use.

Tire chains

Tire chains should only be used if they are needed to increase traction or are required by law. Check that the chains you use are the correct size for your vehicle's tires. Also check that there is enough clearance between the fenders and the chains as installed on the tires.

Install the chains on the front tires tightly, according to the chain manufacturer's instructions. Retighten the chains after driving about 1.0 km (1/2 mile) if necessary. With the chains installed, drive slowly.

NOTICE

- **If you hear the chains hitting against the vehicle body while driving, stop and tighten them.**
- **If your vehicle is equipped with full wheel caps, remove the wheel caps before installing the chains or the wheel caps can be damaged by the chain bands.**

Stuck vehicle

If your vehicle gets stuck in snow, mud or sand, follow the directions below:

1) Shift the transaxle back and forth between a forward range (or first gear for manual transaxle) and reverse. This will create a rocking motion which may give you enough momentum to free the vehicle. Press gently on the accelerator to keep wheel spinning to a minimum wheel rpm. Remove your foot from the accelerator while shifting.
   Do not race the engine. Excessive wheel spin will cause the tires to dig deeper, making it more difficult to free the vehicle.

NOTE:
If your vehicle is equipped with the ESP®, you may have to turn the ESP® system off in order to spin the wheels.

2) If your vehicle remains stuck after a few minutes of rocking, we recommend you to consult your SUZUKI dealer or a roadside assistance service. If a towing service is not available in an emergency, your vehicle may be temporarily towed by a towing cable or chain secured to the towing hook either on the front of the vehicle or on the rear of the vehicle. Refer to “Frame hooks” in “OTHER CONTROLS AND EQUIPMENT” section.

⚠ WARNING

Do not allow anyone to stand near the vehicle when you are rocking it, and do not spin the wheels faster than an indicated 40 km/h (25 mph) on the speedometer. Personal injury and/or vehicle damage may result from spinning the wheels too fast.

NOTICE

Do not continue rocking the vehicle for more than a few minutes. Prolonged rocking can cause engine overheating or transaxle damage.

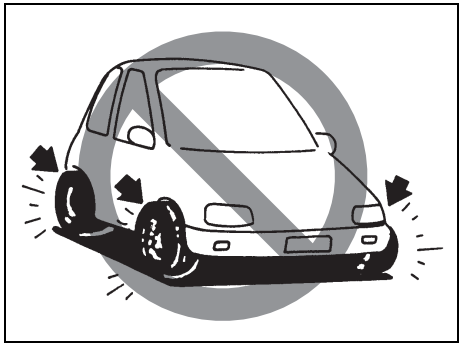

54G638S

⚠ WARNING

In addition to following the driving tips in this section, it is important to observe the following precautions.

- **Check that your tires are in good condition and always maintain the specified tire pressure. Refer to “Tires” in “INSPECTION AND MAINTENANCE” section for details.**

(Continued)

⚠ WARNING

(Continued)

- **Do not use tires other than those specified by SUZUKI. Never use different sizes or types of tires on the front and rear wheels. For information regarding the specified tires, refer to the tire information label located on the driver's door lock pillar.**
- **Never use oversized tires or special shock absorbers and springs to raise (jack up) your vehicle. This will change the handling characteristics. Oversized tires may also rub against the fender over bumps, causing vehicle damage or tire failure.**
- **After driving through water, test the brakes while driving at a slow speed to see if they have maintained their normal effectiveness. If the brakes are less effective than normal, dry them by repeatedly applying the brakes while driving slowly until the brakes have regained their normal effectiveness.**

MEMO

OTHER CONTROLS AND EQUIPMENT

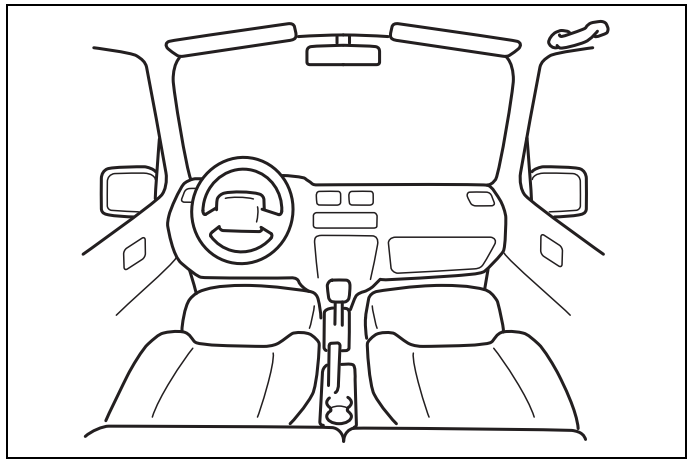

60G407

Fuel filler cap 5-1
Engine hood 5-2
Sun visor 5-4
Interior light 5-5
Accessory socket 5-8
USB socket (if equipped) 5-9
Sunroof (if equipped) 5-9
Assist grips 5-11
Glove box 5-12
Overhead console (if equipped) 5-12
Cup holder and storage area 5-13
Footrest 5-15
Clock (if equipped) 5-15
Floor mats (if equipped) 5-16
Luggage compartment hooks 5-16
Luggage compartment cover 5-18
Luggage compartment board (if equipped) 5-18
Roof rails or roof rack anchors (if equipped) 5-19
Frame hooks 5-20
Heating and air conditioning system 5-23
Heating system 5-25
Manual heating and air conditioning system 5-27
Automatic heating and air conditioning system (climate control) 5-32
Radio antenna 5-38
Installation of radio frequency transmitters 5-39
Audio system (Type A / Type B) (if equipped) 5-40

Fuel filler cap

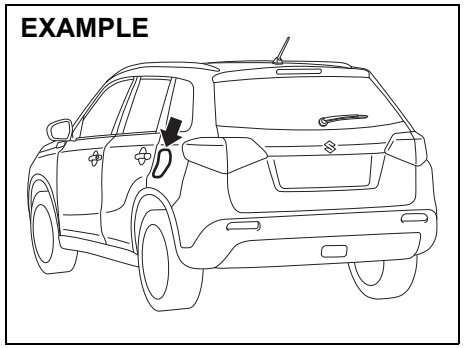

54P000501

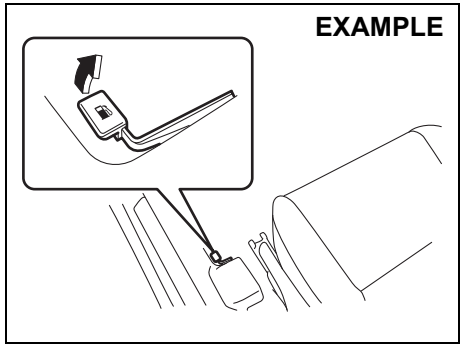

62J058

A fuel filler cap is located on the left rear side of the vehicle. The fuel filler door can be unlocked by pulling up the opener lever located on the outboard side of the driver's seat and locked by simply closing the door.

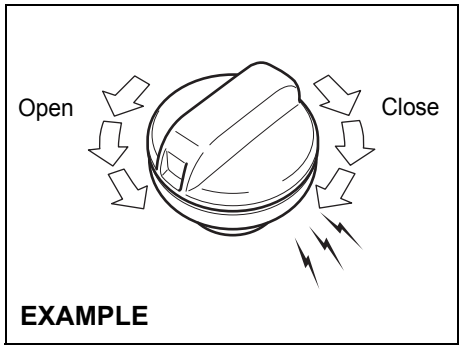

57L51093

To remove the fuel filler cap:
1) Open the fuel filler door.
2) Remove the cap by turning it counter-clockwise.

⚠ CAUTION

Remove the fuel filler cap slowly. The fuel may be under pressure and may spray out, causing injury.

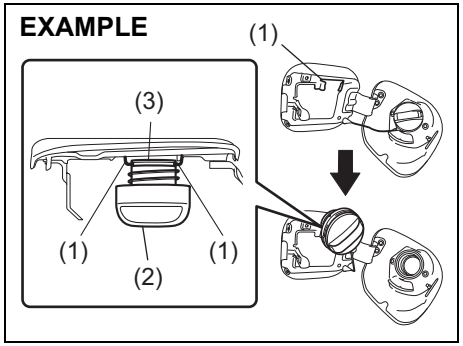

54P000502

NOTE:
The cap holder (1) holds the fuel filler cap (2) by hooking the groove (3) when refueling.

To reinstall the fuel filler cap:
1) Turn the cap clockwise until you hear several clicks.
2) Close the fuel filler door.

⚠ WARNING

Fuel is extremely flammable. Do not smoke when refueling, and check that there are no open flames or sparks in the area.

⚠ WARNING

If you need to replace the fuel cap, use a genuine SUZUKI cap. Use of an improper cap can result in a malfunction of the fuel system or emission control system. It may also result in fuel leakage in the event of an accident.

Engine hood

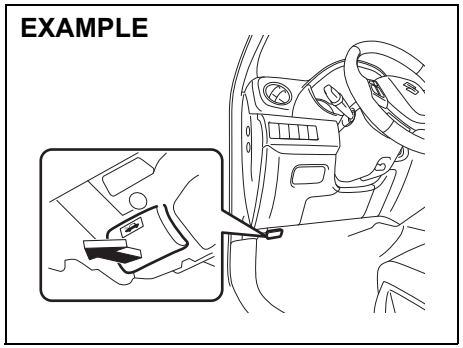

54P000503

To open the engine hood:

1) Pull the hood release handle located on the outboard side of the driver's side of the instrument panel. This will disengage the engine hood lock halfway.

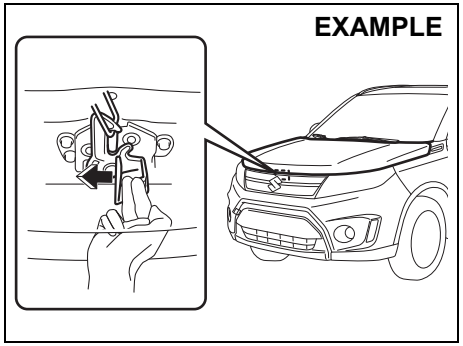

54P000504

2) Push the under-hood release lever sideways with your finger, as shown in the illustration. While pushing the lever, lift up the engine hood.

⚠ CAUTION

The release lever can be hot enough to burn your finger right after driving. Touch the lever after it becomes cool enough.

NOTICE

Check that the wiper arms are not raised before you lift up the engine hood to avoid damaging the wiper arms and the engine hood.

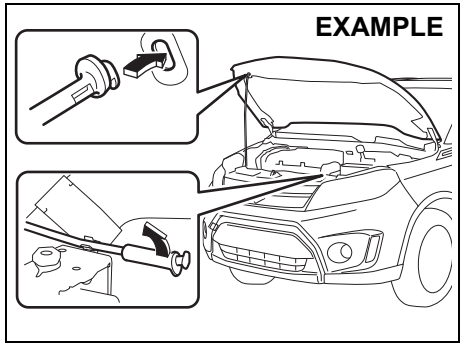

54P000505

3) While holding the hood, pull the prop rod out from the holding clip, and then insert the end of the rod into the designated hole in the hood.

⚠ CAUTION

- **The prop rod can be hot enough to burn your finger right after driving. Touch the rod after it becomes cool enough.**
- **Insert the end of the rod into the hole securely. If the rod slips out, you may get caught in the closing hood.**
- **The rod may slip out when the hood is blown by wind. Be careful on windy days.**

To close the engine hood:

1) Lift the hood up slightly and remove the prop rod from the hole. Put the prop rod back into the holding clip.

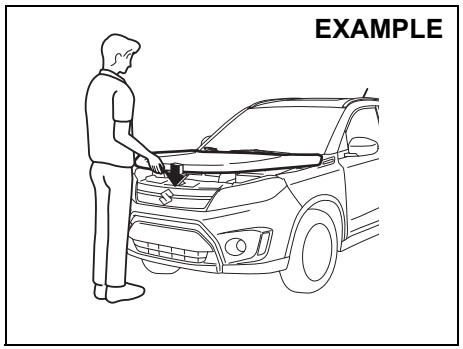

54P000506

2) Lower the hood to about 20 cm above the hood latch, and then let it drop down. Check that the hood is securely latched after closing.

⚠ WARNING

Check that the hood is fully closed and latched before driving. If it is not, it can fly up unexpectedly during driving, obstructing your view and resulting in an accident.

⚠ CAUTION

To avoid injury, check that no part of the occupant's body such as hands or head is in the path of the hood when closing it.

NOTICE

Pushing on the hood from the top may damage it.

Sun visor

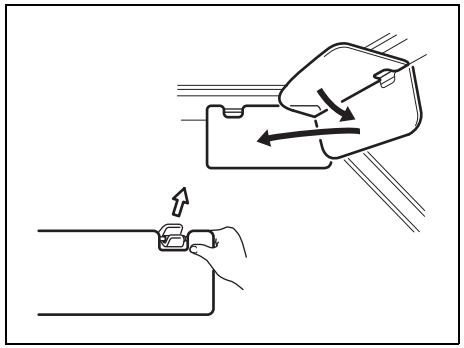

79J161

The sun visors can be pulled down to block glare coming through the windshield, or they can be unhooked and turned to the side to block glare coming through the side window.

NOTICE

When unhooking and hooking a sun visor, handle it by the hard plastic parts or the sun visor can be damaged.

Card holder

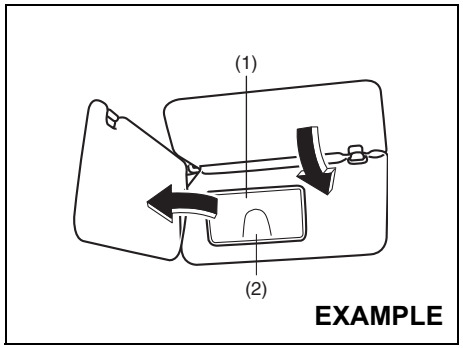

80JM152

(1) Mirror cover
(2) Card holder

You can put a card in the card holder (2) on the back of the sun visor.

NOTICE

When you park your vehicle outdoors in direct sunlight or in hot weather, do not leave plastic cards in the holder. The heat may distort them.

Vanity mirror

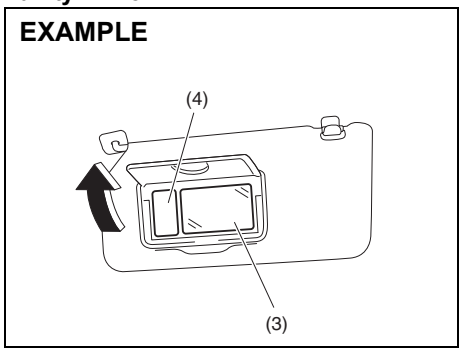

61MM0B018

(3) Vanity mirror
(4) Vanity mirror light

To use the vanity mirror (3) on the back of the sun visor, pull up the mirror cover (1).

The vanity mirror light (4) comes on when the mirror cover (1) is opened.

⚠ WARNING

- **Do not use the mirror while driving your vehicle or you lose control of the vehicle.**
- **When using the vanity mirror, do not move too close to a front air bag location or lean against it. If the front air bag is accidentally inflated, it could hit you hard.**

NOTICE
If the vanity mirror has a light, do not leave the mirror cover open for a long time, or the battery will discharge.

Interior light

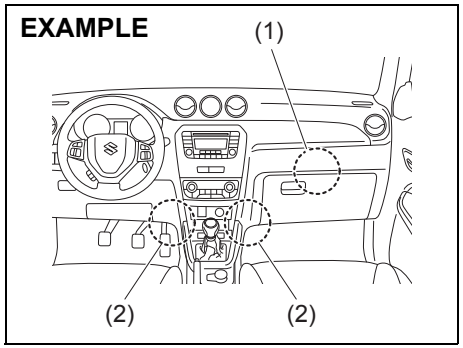

54P000507

(1) Glove box light (if equipped)
(2) Footwell lights (if equipped)

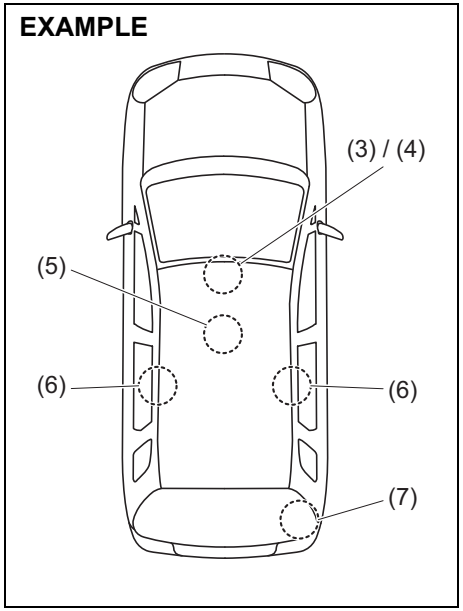

54P000550

(3) Front (without overhead console)
(4) Front (with overhead console)
(5) Center (without sunroof)
(6) Center (with sunroof)
(7) Luggage compartment (if equipped)

Glove box light (if equipped) (1)

Refer to “Glove box” in this section.

Footwell lights (if equipped) (2)

A footwell light is provided in the leg space in front of each front seat. When any door (including the tailgate) is open, the footwell lights on both sides light automatically.

NOTE:
You can change the footwell light operations via the information display. Refer to “Information display” in “BEFORE DRIVING” section.

Front (without overhead console) (3)

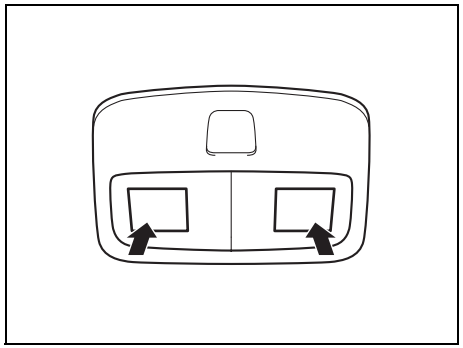

61MM0A205

Push the switch to turn on the light and push it again to turn off the light.

Front (with overhead console) (4)

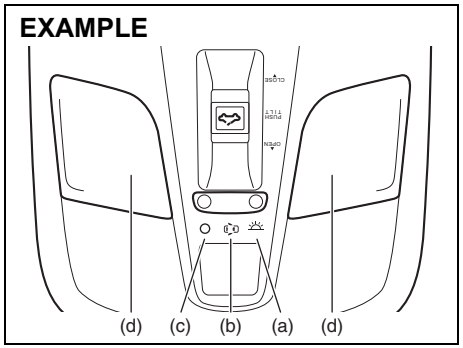

61MM0A106

Center (without sunroof) (5)

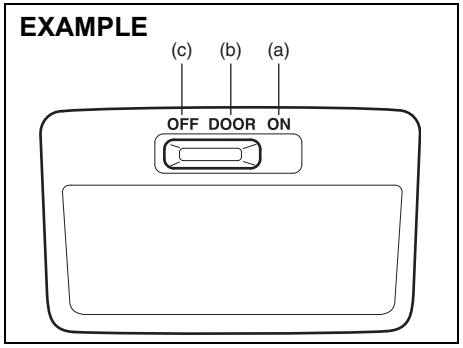

61MM0A107

Center (with sunroof) (6)

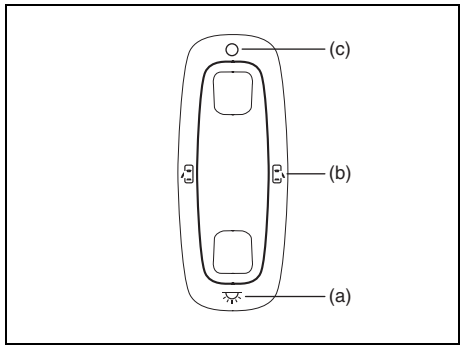

61MM0B022

These light switches have three or four positions which function as described below:

ON (a)
The light comes on and stays on regardless of whether the door is open or closed.

NOTE:
- *The light will turn off after a period of time when the light remains illuminated to prevent the battery from discharging.*
- *For a short while after turning the ignition switch to "LOCK" or pressing the engine switch to change the ignition mode to "LOCK" (OFF), there is an occasion that the light will not turn on even if the light switch is turned on. This is also a normal light control to prevent the battery from discharging.*

DOOR (b)
The light comes on when the door is opened. After closing all doors, the light will remain on for about 15 seconds and then fade out. If you insert the key, or press the engine switch to change the ignition mode to "ACC" or "ON" during this time, the light will start to fade out immediately. After removing the key from the ignition switch, the light will turn on for about 15 seconds and then fade out.

NOTE:
If you leave any door open, the light will automatically turn off after about 15 minutes to prevent from discharging the battery.

OFF (c)
The light remains off even when the door is opened.

Spot light (d)
When the light switch is in "DOOR" or "OFF" position, push the switch to turn on the light and push it again to turn off the light.

Luggage compartment (if equipped) (7)

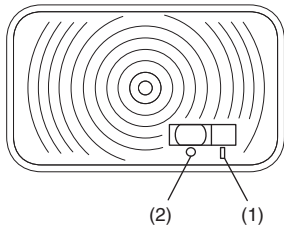

61MM0B023

When you open the tailgate with the luggage compartment light switch in ON position (1), the light comes on and remains on as long as you keep the tailgate open.
When the luggage compartment light switch is in OFF position (2), the light remains off regardless of whether the tailgate is open or close.

NOTICE
Do not leave the tailgate open with the luggage compartment light switch in ON position for a long time, or the battery will discharge.

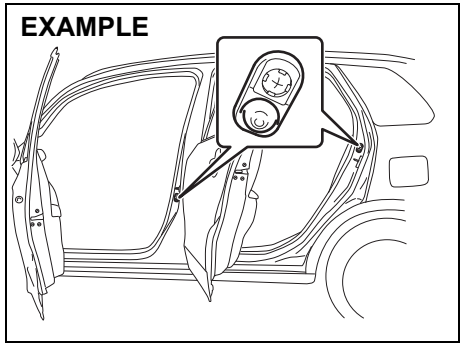

54P000509

NOTE:
The number of doors involved in the lighting operation of the interior light depends on the vehicle specification. If there is a switch (rubber protrusion) at the door opening as shown, the door is involved in the lighting operation. The tailgate is also involved in this operation even without the rubber protrusion.

Accessory socket

Center console

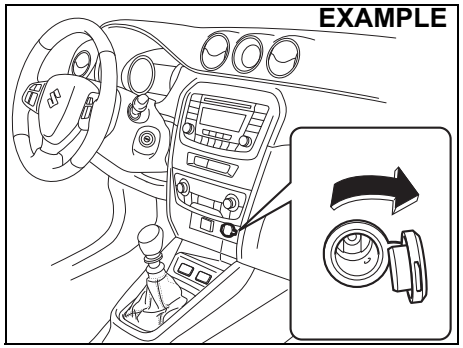

54P000510

Luggage compartment (if equipped)

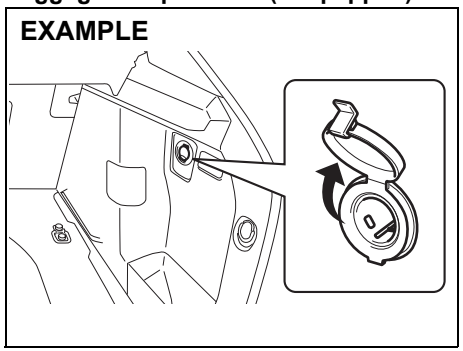

54P000511

The accessory socket will work when the ignition switch is in “ACC” or “ON” position, or the ignition mode is “ACC” or “ON”.
Each socket can be used to provide 12 volt/120 watt/10 ampere power for electrical accessories when used alone. Check that the cap remains on the socket when the socket is not in use.

NOTICE

- **To prevent the fuse from being blown, when using sockets at the same time, do not exceed the total combined power capacity of 12 volt/120 watt/10 ampere.**
- **Use of inappropriate electrical accessories can cause damage to your vehicle’s electrical system. Check that any electrical accessories you use are designed to plug into this type of socket.**

USB socket (if equipped)

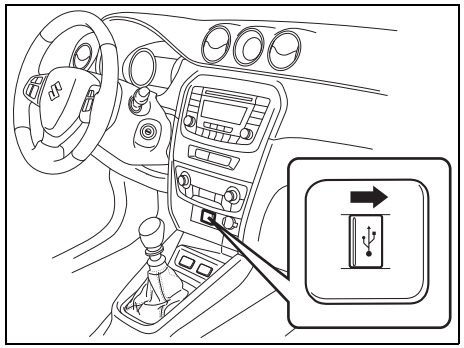

54P000512

Connect your portable digital music player, etc. to this socket to enjoy music through the vehicle's audio system. Refer to "Audio system (Type A / Type B) (if equipped)" in this section.

Sunroof (if equipped)

You can tilt or slide the sunroof by operating the sunroof switch after pressing the engine switch to change the ignition mode to "ON".

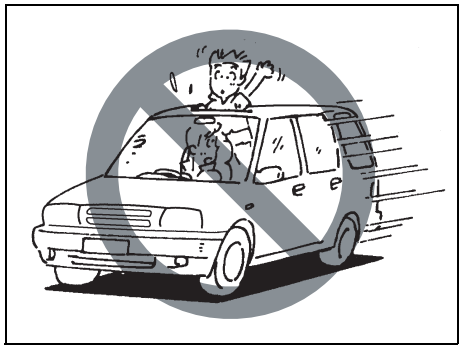

65D612

⚠ WARNING

- **Never allow any part of your body such as hands or head to get out of the sunroof opening while the vehicle is moving.**
- **Fasten your seat belts and use child restraints at all times. In an accident, you could be thrown from the vehicle through an open sunroof.**
- **Check that there are no hands or other obstructions in the path of the sunroof when you close the sunroof.**
- **Always take the keyless push start system remote controller with you when leaving the vehicle even if only for a short time. Also do not leave children alone in a parked vehicle. Unattended children could use the sunroof switches and get trapped by the sunroof.**

NOTICE

- **Do not put your body weight on the roof around the sunroof such as by sitting on it.**
- **Remove water drops, snow, ice or sand from the sunroof before opening.**

- Close the sunroof when you leave the vehicle unattended.
- Periodically inspect the guide rail for dirt and clean it if any dirt has accumulated.

To tilt the sunroof

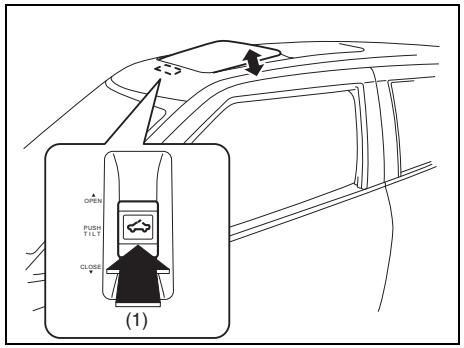

61MM0A109

To tilt the sunroof up from fully closed, push “PUSH TILT” part (1) of the sunroof switch. The sunroof will tilt up fully.

NOTE:
If the sun shade is closed when tilting up, the sun shade will open automatically.

To tilt the sunroof down from tilted up position, push “PUSH TILT” part (1) of the sunroof switch again. The sunroof will tilt down. If you keep holding “PUSH TILT” part (1) of the sunroof switch for more than one second, the sunroof and sun shade will be completely closed.

To open the sunroof

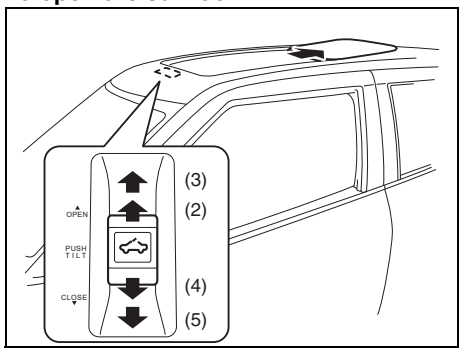

61MM0A110

You can open the sunroof manually by pushing the sunroof switch to “OPEN” position (2). The sun shade will open, and then the sunroof will open.

When you push the sunroof switch to FULL OPEN position (3), the sun shade will fully open. When you push the sunroof switch to FULL OPEN position (3) again, the sunroof will fully open.

When you keep holding the sunroof switch to FULL OPEN position (3) for more than one second, the sun shade and sunroof will fully open.
To stop the sun shade or sunroof during operation, push the switch in any way briefly.

To close the sunroof
You can close the sunroof manually by pushing the sunroof switch to “CLOSE” position (4). The sunroof will close, and then the sun shade will close.

When you push the sunroof switch to FULL CLOSE position (5), the sunroof will fully close. When you push the sunroof switch to FULL CLOSE position (5) again, the sun shade will be fully closed.

When you keep holding the sunroof switch to FULL CLOSE position (5) for more than one second, the sunroof and sun shade will be fully closed.
To stop the sunroof or sun shade during operation, push the switch in any way briefly.

There is a system to prevent being pinched by the sunroof.
When the system senses that something is pinched when the sunroof is sliding forward or tilting down, the sunroof will automatically reverse direction and slide back or tilt up. This system will operate when the sunroof is closing or tilting down automatically.

Check that there are no hands or other obstructions in the path of the sunroof when you close the sunroof even though there is a system to prevent being pinched by the sunroof.

⚠ WARNING

The system to prevent being pinched by the sunroof may not work if the battery is not sufficiently charged.

⚠ CAUTION

The system to prevent being pinched by the sunroof does not work in the area where the sunroof is almost completely closed.

If the system to prevent being pinched by the sunroof does not operate properly, close the sunroof fully by using the sunroof switch and ask your dealer to have the system inspected.

Assist grips

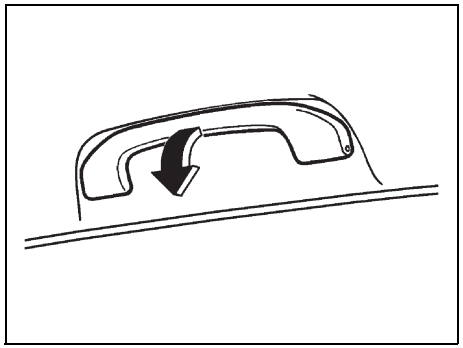

54G249

Assist grips are provided for convenience.

NOTICE

To avoid damaging the assist grip and the molded headlining, do not hang down the assist grip.

Coat hooks

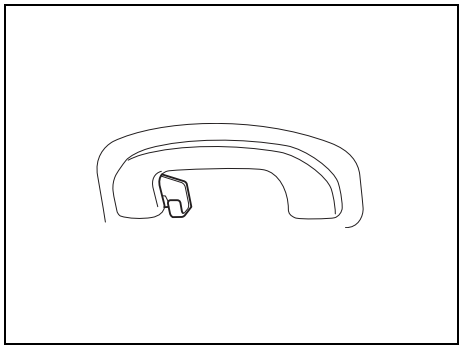

61MM0B025

You can hang clothing on the coat hooks. These hooks are not designed for large or heavy items.

⚠ WARNING

If your vehicle is equipped with side curtain air bags, do not hang sharp items such as a hanger on the coat hook. When hanging the clothes, hang them on the hook without using a hanger.

Glove box

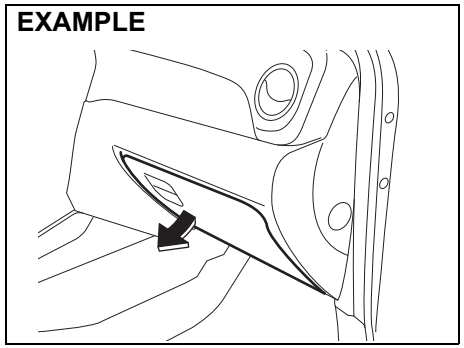

54P000513

To open the glove box, pull the latch lever. To close it, push the lid until it latches securely.

⚠ WARNING

Never drive with the glove box lid open. It could cause injury if an accident occurs.

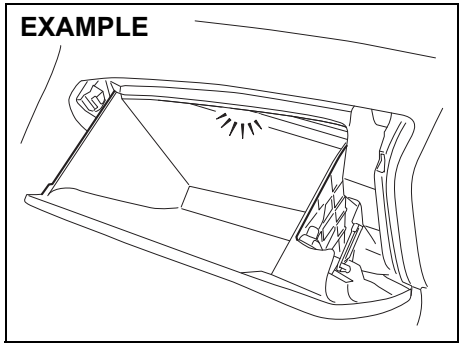

54P000514

The glove box light (if equipped) stays on while the lid is open.

Overhead console (if equipped)

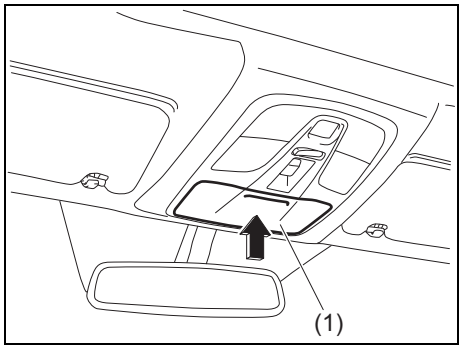

54P000515

Use this stowage to keep small articles.
You can open the lid (1) by pressing the raised portion on it.

⚠ WARNING

- **Do not drive with the overhead console lid open, or the articles stowed inside could fall down during braking, acceleration or in the event of a crash. Always close the lid after putting something into or taking something out of the console.**
- **If you park your vehicle outdoors in direct sunlight or in hot weather, the overhead console can get very hot since it is close to the roof. So, when parking in such conditions:**
  - **Do not leave eyeglasses in the overhead console. The heat may distort plastic lenses or frames.**
  - **Do not place flammable items, such as a lighter, in the overhead console. The heat may cause a fire.**

NOTICE

- **Do not apply undue force to the lid when closing it. Doing so could break the lid and articles inside.**
- **Place glasses in a case when stowing them in the overhead console, or the lenses may be damaged.**

Cup holder and storage area

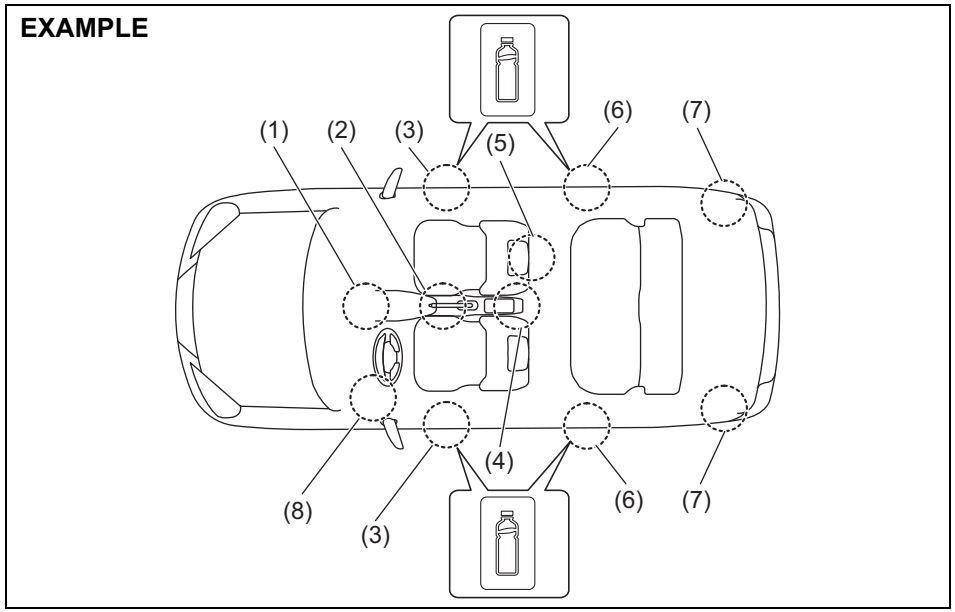

54P000516

(1) Instrument panel pocket
(2) Front cup holders
(3) Front bottle holder
(4) Rear cup holder
(5) Front seat back pocket
(6) Rear bottle holder
(7) Luggage compartment pocket
(8) Column hole cover pocket

Instrument panel pocket (1) / Column hole cover pocket (8)

⚠ WARNING

Do not place any objects which may fall out from the pocket when the vehicle is moving.
Failure to take the precaution may result in an object interfering with the pedals and causing a loss of vehicle control or an accident.

Front cup holders (2) / Rear cup holder (4)

Use the rear cup holder to put a cup with a lid or a bottle with a cap. Also, you can put small articles in the rear cup holder.

⚠ WARNING

Failure to take the precautions listed below could cause personal injury or vehicle damage.

- **Be careful when you are using the cup holders to hold a cup containing hot liquid. Spilling out hot liquid can cause burn injury.**
- **Do not use the cup holders to hold sharp-edged, hard or breakable objects. Objects in the cup holders may be thrown about during a sudden stop or impact, and could cause personal injury.**
- **Be careful not to spill liquid or insert any foreign materials into the moving part of the gearshift lever, or any electrical components. Liquid or foreign materials may damage these parts.**

Front bottle holder (3) / Rear bottle holder (6)

You should only place a bottle with a cap in the holder.

Front seat back pocket (5)

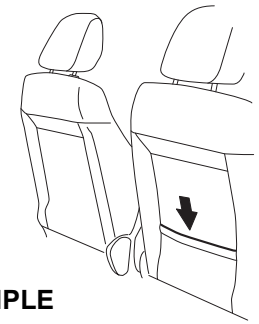

54P000517

This pocket is provided for holding light and soft things such as gloves, newspapers or magazines.

⚠ CAUTION

Do not put hard or breakable objects in the pocket. If an accident occurs, objects such as bottles, cans, etc. can injure the occupants in the rear seat.

Luggage compartment pocket (7)

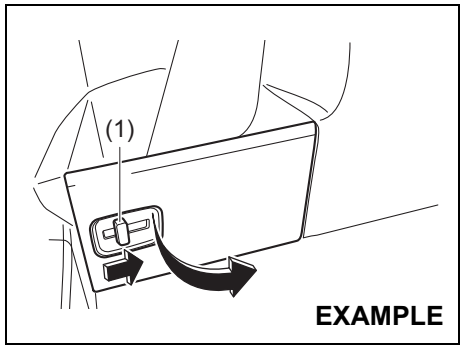

54P000518

To open the lid, slide the lever (1) and pull the lid.

If the lid has been removed, it can be stored behind the luggage compartment cover. Refer to “Luggage compartment cover” in this section for details.

Footrest

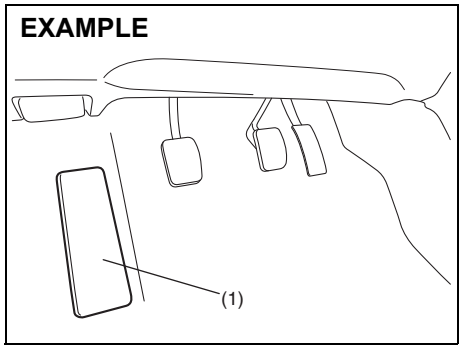

68LM543

Use the footrest (1) as a support for your left foot.

Clock (if equipped)

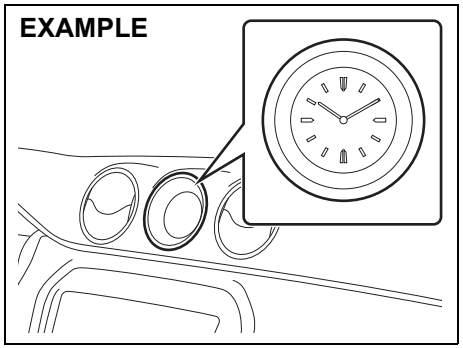

54P000519

You can change the time via the information display. When doing so, the clock time will be changed automatically. Refer to “Information display” in “BEFORE DRIVING” section for details.

Floor mats (if equipped)

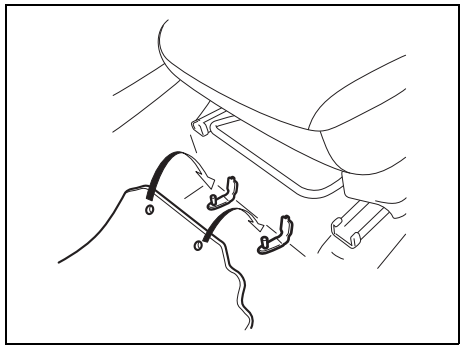

68LM554

To prevent the driver's side floor mat from sliding forward and possibly interfering with the operation of the pedals, genuine SUZUKI floor mats are recommended.
Whenever you put the driver's side floor mat back in the vehicle after it has been removed, hook the floor mat grommets to the fasteners and position the floor mat properly in the footwell.

When you replace the floor mats in your vehicle with a different type such as all-weather floor mats, we highly recommend to use genuine SUZUKI floor mats for proper fitting.

⚠ WARNING

Failure to take the following precautions may result in the driver's side floor mat interfering with the pedals and causing a loss of vehicle control or an accident.
- **Check that the floor mat grommets are hooked to the fasteners.**
- **Never place additional floor mats on top of the existing floor mat.**

Luggage compartment hooks

Shopping hook

EXAMPLE

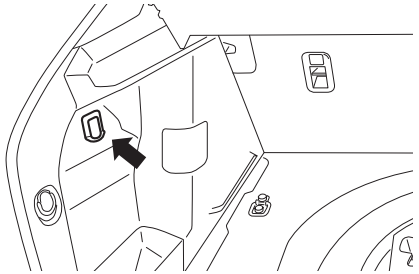

54P000520

You can hang the shopping bag or other suitable objects on the hook.
This hook is not designed for large or heavy items.

NOTICE

To avoid breaking the hook, do not hang items heavier than the following weight.
Shopping hook: 2 kg (4.4 lbs)

Cargo net hooks (if equipped)

EXAMPLE

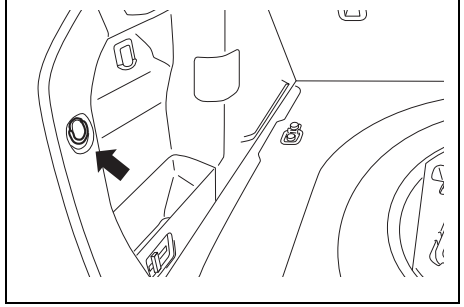

54P000521

You can hook an optional net to these hooks.
These hooks are not designed for large or heavy items.

NOTICE

To avoid breaking the hooks, do not hang large or heavy items.

Luggage restraint loops

EXAMPLE

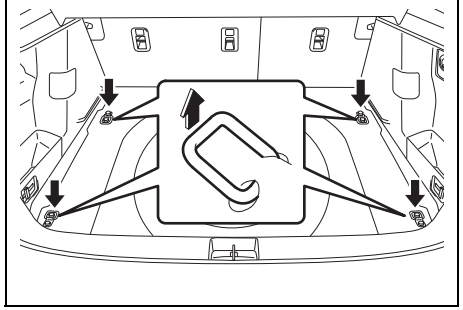

54P000522

Four luggage restraint loops are provided on the luggage compartment floor. An optional rubber net can be hooked to these loops to help keep cargo from moving around in the luggage compartment during normal driving.

⚠ WARNING

The luggage restraint loops and optional rubber net can be used to help keep lightweight cargo from moving around in the luggage compartment during normal driving. They are neither capable of nor intended for preventing cargo from being thrown around in a crash.
Place heavier objects on the floor and as far forward in the cargo area as possible. Never pile cargo higher than the top of the seat backs.

⚠ WARNING

Do not attach the child restraint top strap to the luggage restraint loops. Incorrectly attached top strap will reduce the intended effectiveness of the child restraint system.

NOTICE

If you secure objects heavier than 40 kg (88 lbs) with the luggage restraint loops, the loops can be damaged in a sudden stop or crash.

Use the luggage restraint loops only for securing objects lighter than 40 kg (88 lbs).

Luggage compartment cover

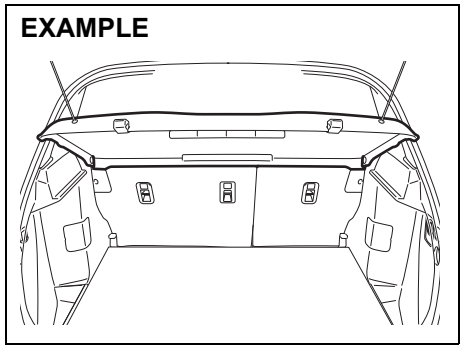

54P000523

Luggage or other cargo placed in the luggage compartment is hidden from view by a luggage compartment cover.

⚠ WARNING

Do not carry items on top of the luggage compartment cover, even if they are small and light. Objects on top of the cover could be thrown about in an accident, causing injury, or could obstruct the driver's rear view.

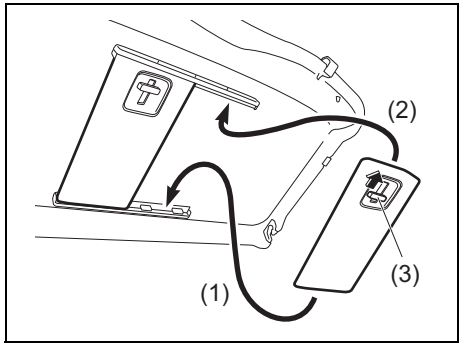

54P000549

NOTE:
The luggage compartment pocket lid has been removed, you can be attached to the back of the luggage compartment cover.
Attach the lid to luggage compartment cover in the numerical order (1) and (2) as shown in illustration.
Then, slide the lever (3) to lock the lid.

Luggage compartment board (if equipped)

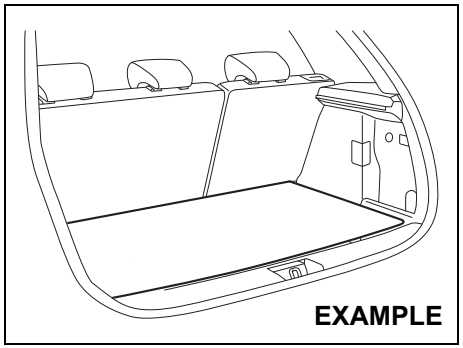

54P000524

Your vehicle is equipped with the luggage compartment board in the luggage compartment. You can place luggage or other cargos on the board or under the board. You can also place tall luggage by removing the board from the luggage compartment.

⚠ WARNING

Objects that are higher than the luggage compartment cover can obstruct the driver's rear view, which can cause an accident. These objects can also become damaged or can damage the tailgate.

Do not carry objects that are higher than the luggage compartment cover.

⚠ CAUTION

If you are not careful when handling the luggage board, you could be injured.

Handle the luggage board carefully when removing or installing it.

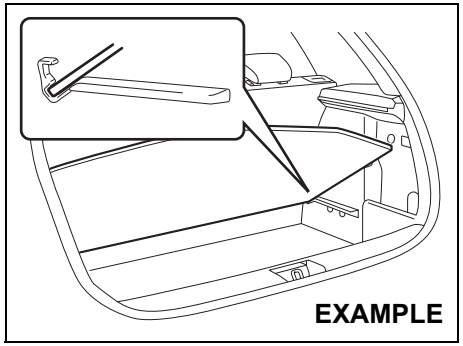

54P000525

The luggage compartment board can be held open as shown in the illustration.

NOTICE

Observe the following instructions, not to break the luggage compartment board.

- **Do not hold open the board while driving.**
- **Do not apply any load to the board while holding it open.**

Roof rails or roof rack anchors (if equipped)

Roof rails

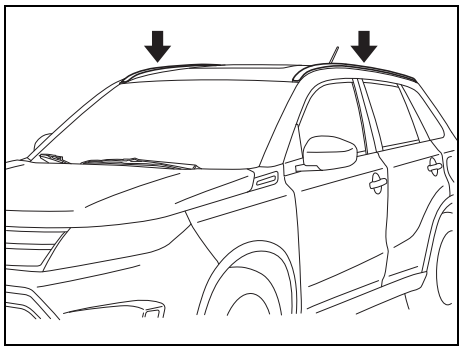

54P000526

Roof rack anchors

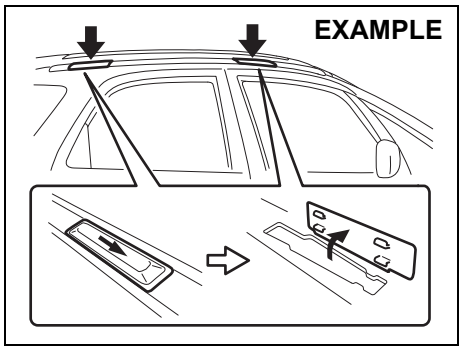

80J082

You can use the roof rails or the roof rack anchors to attach the optional roof rack which is available at your SUZUKI dealer. If you use a roof rack, observe the instructions and precautions in this section and provided with the roof rack.

- Check that the roof rack is securely installed.
- To mount various types of cargo (such as skis, bicycles, etc.) properly, use suitable attachments which are available at your SUZUKI dealer. Install the attachments properly and securely according to the instructions provided. Do not mount cargo directly on the roof panel. The cargo can damage the roof panel.
- The gross weight of the roof rack plus cargo must not exceed the loading capacity.
  – Roof rails: 75 kg (165 lbs)
  – Roof rack anchors: 50 kg (110 lbs)
  Also, do not let the gross vehicle weight (fully loaded vehicle including driver, passengers, cargo, roof load and trailer tongue weight) exceed the Gross Vehicle Weight Rating (GVWR) listed in “SPECIFICATIONS” section.
- Mount and secure the cargo onto the roof rack properly according to the instructions provided. Stow the heaviest items at the bottom and distribute the cargo as evenly as possible.
- Do not carry large items that hang over the bumpers or the sides of the vehicle. Otherwise, these items could block your view.
- Secure the front and rear ends of long items such as wood panels and surfboards, to both the front and rear of the vehicle. You should protect the painted surfaces of the vehicle from scuffing caused by tie-down ropes.
- Check periodically that the roof rack is securely installed and free from damage.
- For vehicles with roof rack anchors, check that the anchors are covered with the caps when not in use.

⚠ WARNING

- **Abrupt maneuvers or failure to properly secure cargo can allow the cargo to fly off the vehicle and hit others, causing personal injury or property damage.**
- **Mount cargo securely and avoid abrupt maneuvers such as jackrabbit starts, sharp turns, fast cornering and sudden braking. Check periodically that cargo is securely fastened.**
- **Large, bulky, long or flat items can affect vehicle aerodynamics or be caught by the wind, and can reduce vehicle control resulting in an accident and personal injury. Drive cautiously at a safely reduced speed when carrying this type of cargo.**

Frame hooks

Your SUZUKI not recommend you use the frame hooks for towing another vehicle.
SUZUKI was originally designed to tow your vehicle on the road emergency towing.
If your vehicle needs to be towed in an emergency, refer to “Towing” in “EMERGENCY SERVICE” section.

⚠ WARNING

Observe the following instructions when using frame hooks. The towing hook or vehicle body may break and cause serious injury or damage.

- **Do not use the frame hooks for towing another vehicle.**
- **Avoid pulling the vehicle to get out of severe snowy, muddy or sandy conditions, sudden starts or erratic driving maneuvers which could cause excessive stress on the towing hook.**

In such case, we recommend that you contact a professional service.

Front

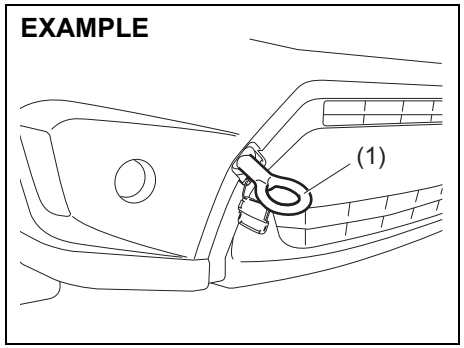

54P000527

The towing hook (1) is provided on the front of the vehicle for use in emergency situations only.

To install the hook (1), follow the procedure below.

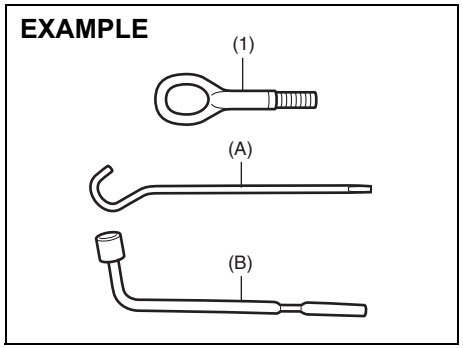

61MM0B039

1) Pick up the towing hook (1), jack handle (A) and wheel brace (B) in the luggage compartment.

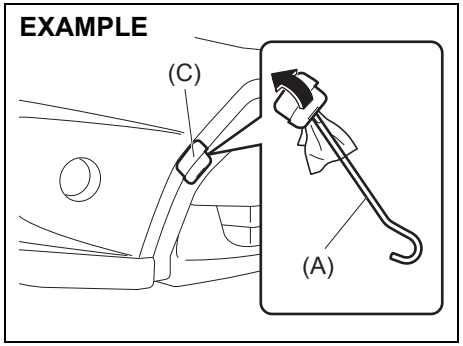

54P000528

2) Remove the cover (C) by using a jack handle (A) covered with a soft cloth as shown in the illustration.

NOTE:
Do not use excessive force as it may damage the cover strap.

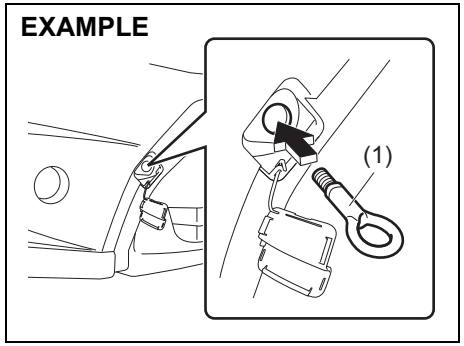

54P000529

3) Install the towing hook (1) by hand.

NOTE:
We recommend that fasten the cover with tape to prevent damage during towing.

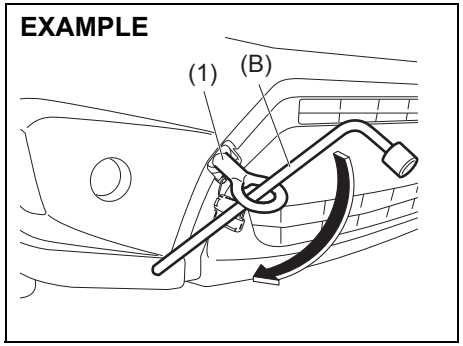

54P000530

4) To tighten the towing hook (1), turn it clockwise by using a wheel brace (B) until the hook (1) is securely installed.

To remove the towing hook (1), reverse the installation procedure.

Rear

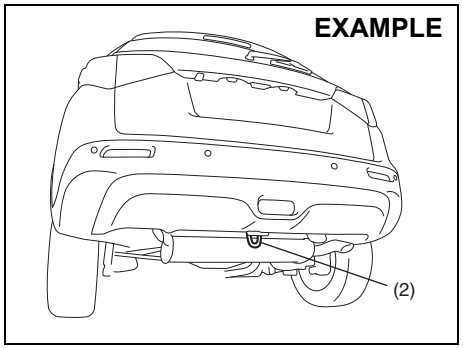

54P000802

The frame hook (2) is provided on the rear of the vehicle for use in emergency situations and sea shipping purposes only.

Other hooks

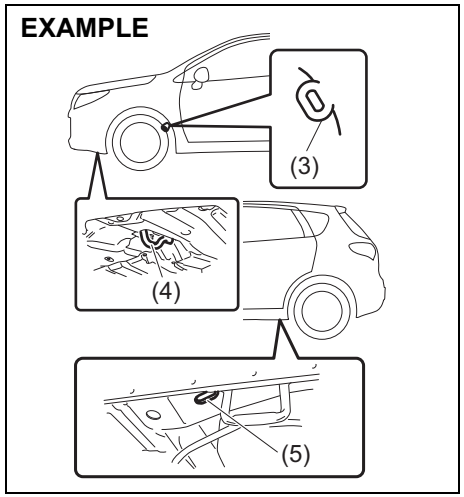

54P000531

The hooks (3) (if equipped) and frame holes (5) are provided for trailer/train shipping purposes only. The hooks (4) are provided for sea shipping purpose only.

⚠ WARNING

Do not use the hooks (3), (4) and the frame holes (5) for towing purpose. These hooks and holes may break and cause serious injury or damage.

NOTICE

To prevent damage to the vehicle, never use the towing hook (1) for trailer / train shipping and sea shipping purposes.

Heating and air conditioning system

There are three types of heating and air conditioning systems as follows:

- Heating system
- Manual heating and air conditioning system
- Automatic heating and air conditioning system (climate control)

Air outlet

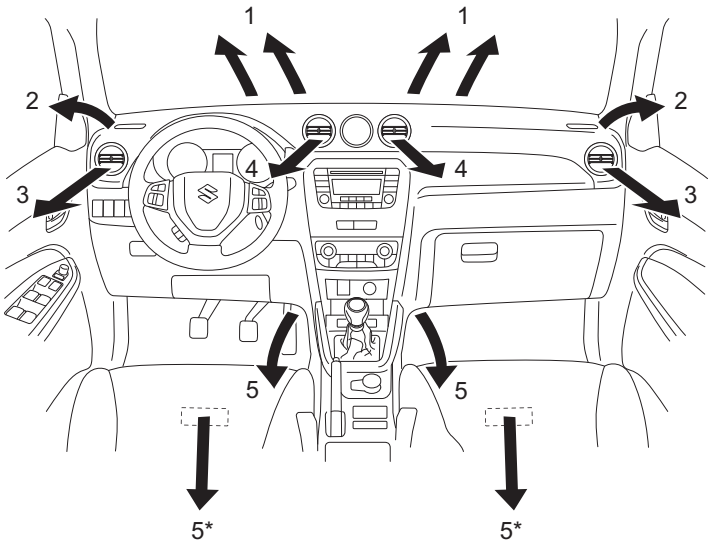

EXAMPLE

54P000532

1. Windshield defroster outlet
2. Side defroster outlet
3. Side outlet
4. Center outlet
5. Floor outlet
   * if equipped

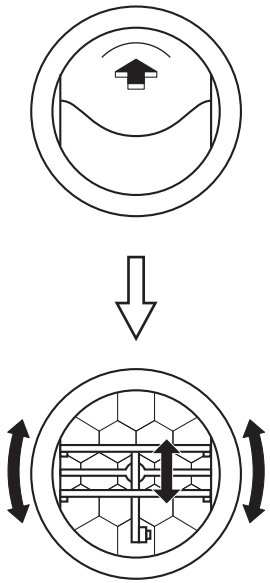

76MH0A118

When each outlet is open, air comes out regardless of the air flow selector position.

Heating system

Description of controls

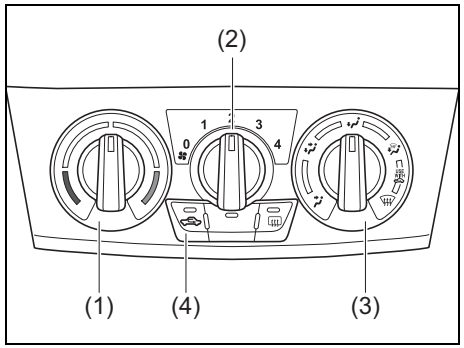

54P000533

Temperature selector (1)
This is used to select the temperature by turning the selector.

Blower speed selector (2)
This is used to turn on the blower and to select blower speed by turning the selector.

Air flow selector (3)

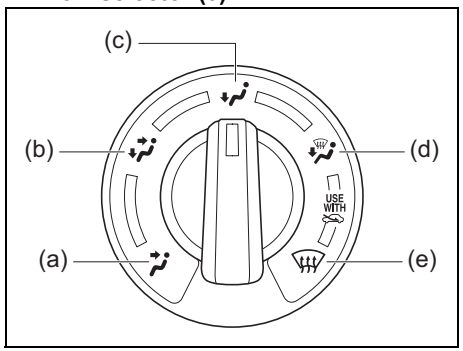

54P000534

This is used to select one of the following functions.

VENTILATION (a)

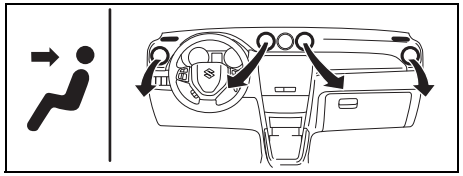

54P000535

Temperature-controlled air comes out of the center and side air outlets.

BI-LEVEL (b)

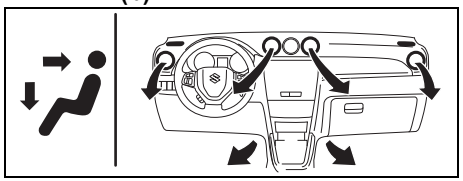

54P000536

Temperature-controlled air comes out of the floor outlets and cooler air comes out of the center and side outlets. When the temperature selector (1) is in the fully cold position or fully hot position, however, the air from the floor outlets and the air from the center and side outlets will be the same temperature.

HEAT (c)

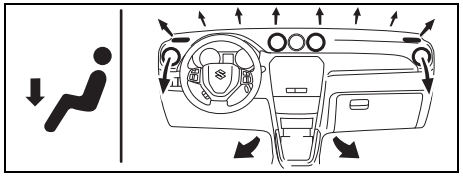

54P000537

Temperature-controlled air comes out of the floor outlets and the side outlets, also comes out of the windshield defroster outlets and also comes slightly out of the side defroster outlets.

HEAT & DEFROST (d)

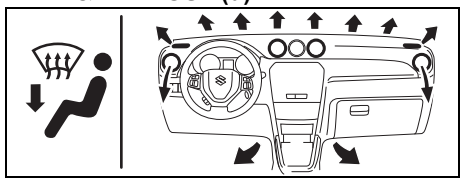

54P000538

Temperature-controlled air comes out of the floor outlets, the windshield defroster outlets, the side defroster outlets and the side outlets.

DEFROST (e)

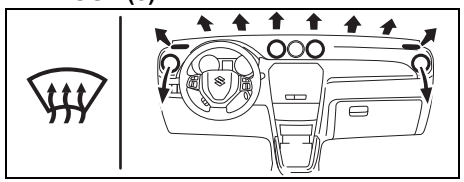

54P000539

Temperature-controlled air comes out of the windshield defroster outlets, the side defroster outlets and the side outlets.

Air intake selector (4)

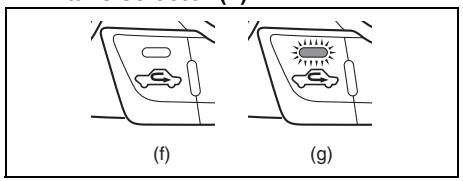

61MM0A020

This selector is used to select the following modes.

FRESH AIR (f)
When this mode is selected, the indicator light will go off and outside air is used.

RECIRCULATED AIR (g)
When this mode is selected, the indicator light will come on, outside air is shut out and inside air is recirculated. This mode is suitable when driving through dusty or polluted air such as in a tunnel, or when attempting to quickly cool down the interior.

FRESH AIR and RECIRCULATED AIR are switched alternately each time the air intake selector is pushed.

NOTE:
If you select RECIRCULATED AIR for an extended period of time, the air in the vehicle can become contaminated. Therefore, you should occasionally select FRESH AIR.

System operating instructions

Natural ventilation
Select VENTILATION and FRESH AIR, the temperature selector to the desired temperature position, and the blower speed selector to off. Fresh air will flow through the vehicle during driving.

Forced ventilation
The control settings are the same as for natural ventilation except you set the blower speed selector to a position other than off.

Normal heating (using outside air)
Select HEAT and FRESH AIR, the temperature selector to the desired temperature position and the blower speed selector to the desired blower speed position. Setting the blower speed selector to a higher blower speed position increases heating efficiency.

Quick heating (using recirculated air)
The control settings are the same as for normal heating except you select RECIRCULATED AIR. If you use this heating method for an extended period of time, the air in the vehicle can become contaminated and the windows can become misty. Therefore, use this method only for quick heating and change to the normal heating method as soon as possible.

Head cooled/Feet warmed heating
Select BI-LEVEL and FRESH AIR, the temperature selector to the desired temperature position, and the blower speed selector to the desired blower speed position. Unless the temperature selector is in the fully cold position or fully hot position, the air that comes out of the center and side outlets will be cooler than the air that comes out of the floor outlets.

Defrosting/Feet warmed heating
Select HEAT & DEFROST and FRESH AIR, the temperature selector to the desired temperature position, and the blower speed selector to high. When the windshield has become clear, set the blower speed selector to the desired blower speed position.

Defrosting
Select DEFROST and FRESH AIR, the temperature selector to the desired temperature position (higher temperature provides more efficient defrosting), and the blower speed selector to high. When the windshield has become clear, set the blower speed selector to the desired blower speed position.

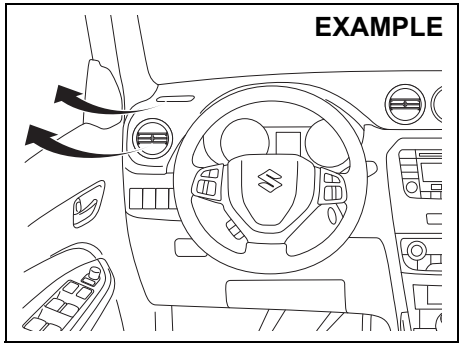

54P000540

NOTE:
If you need maximum defrosting, adjust the temperature selector to hot end and adjust the side outlets so the air blows on the side window, in addition to the above Defrosting procedure.

Manual heating and air conditioning system

Description of controls

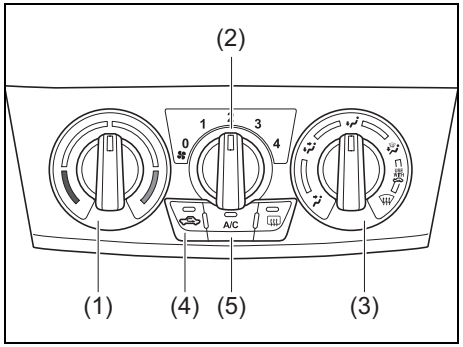

54P000541

Temperature selector (1)
This is used to select the temperature by turning the selector.

Blower speed selector (2)
This is used to turn on the blower and to select blower speed by turning the selector.

Air flow selector (3)

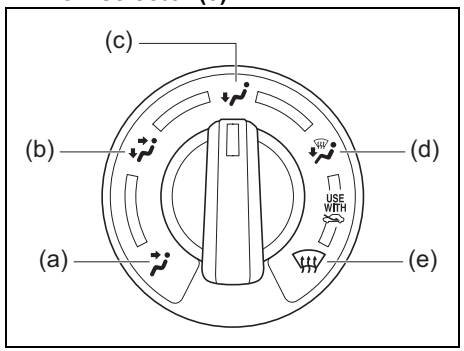

54P000534

This is used to select one of the following functions.

VENTILATION (a)

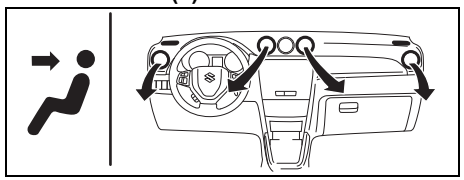

54P000535

Temperature-controlled air comes out of the center and side air outlets.

BI-LEVEL (b)

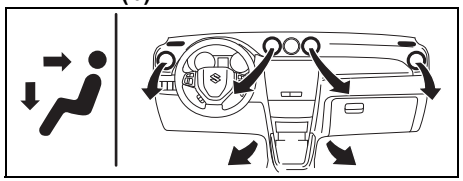

54P000536

Temperature-controlled air comes out of the floor outlets and cooler air comes out of the center and side outlets. When the temperature selector (1) is in the fully cold position or fully hot position, however, the air from the floor outlets and the air from the center and side outlets will be the same temperature.

HEAT (c)

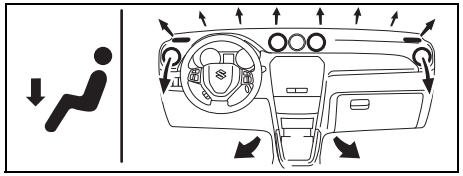

54P000537

Temperature-controlled air comes out of the floor outlets and the side outlets, also comes out of the windshield defroster outlets and also comes slightly out of the side defroster outlets.

HEAT & DEFROST (d)

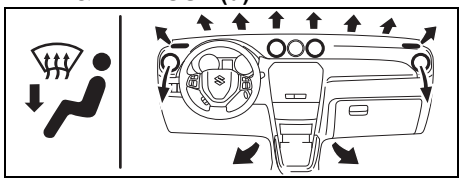

54P000538

Temperature-controlled air comes out of the floor outlets, the windshield defroster outlets, the side defroster outlets and the side outlets.

DEFROST (e)

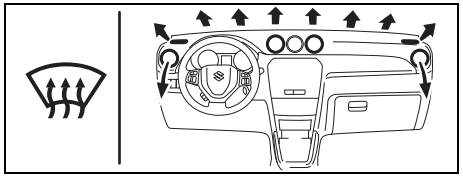

54P000539

Temperature-controlled air comes out of the windshield defroster outlets, the side defroster outlets and the side outlets.

Air intake selector (4)

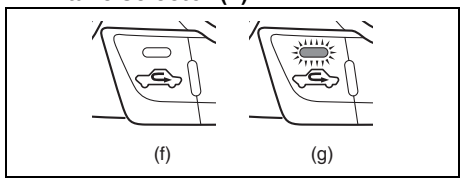

61MM0A020

This selector is used to select the following modes.

FRESH AIR (f)
When this mode is selected, the indicator light will go off and outside air is used.

RECIRCULATED AIR (g)
When this mode is selected, the indicator light will come on, outside air is shut out and inside air is recirculated. This mode is suitable when driving through dusty or polluted air such as in a tunnel, or when attempting to quickly cool down the interior.

FRESH AIR and RECIRCULATED AIR are switched alternately each time the air intake selector is pushed.

NOTE:
If you select RECIRCULATED AIR for an extended period of time, the air in the vehicle can become contaminated. Therefore, you should occasionally select FRESH AIR.

Air conditioning switch (5)
To turn on the air conditioning system, set the blower speed selector to a position other than off and push in “A/C” switch. With this “A/C” switch operation, a indicator light will come on when the air conditioning system is on. To turn off the air conditioning system, push “A/C” switch again.

During operation of the air conditioner, you may notice slight changes in engine speed. These changes are normal, the system is designed so that the compressor turns on or off to maintain the desired temperature.

Less operation of the compressor results in better fuel economy.

System operating instructions

Natural ventilation
Select VENTILATION and FRESH AIR, the temperature selector to the desired temperature position, and the blower speed selector to off. Fresh air will flow through the vehicle during driving.

Forced ventilation
The control settings are the same as for natural ventilation except you set the blower speed selector to a position other than off.

Normal heating (using outside air)
Select HEAT and FRESH AIR, the temperature selector to the desired temperature position and the blower speed selector to the desired blower speed position. Setting the blower speed selector to a higher blower speed position increases heating efficiency.

Quick heating (using recirculated air)
The control settings are the same as for normal heating except you select RECIRCULATED AIR. If you use this heating method for an extended period of time, the air in the vehicle can become contaminated and the windows can become misty. Therefore, use this method only for quick heating and change to the normal heating method as soon as possible.

Head cooled/Feet warmed heating
Select BI-LEVEL and FRESH AIR, the temperature selector to the desired temperature position, and the blower speed selector to the desired blower speed position. Unless the temperature selector is in the fully cold position or fully hot position, the air that comes out of the center and side outlets will be cooler than the air that comes out of the floor outlets.

Normal cooling
Set the air flow selector to VENTILATION, the temperature selector to the desired temperature position and the blower speed selector to the desired blower speed position, and turn on “A/C” switch. Setting the blower speed selector to a higher blower speed position increases cooling efficiency.

You can switch the air intake selector to either FRESH AIR or RECIRCULATED AIR as you desire. Choosing RECIRCULATED AIR increases cooling efficiency.

Quick cooling (using recirculated air)
The control settings are the same as for normal cooling except you select RECIRCULATED AIR and the highest blower speed.

NOTE:
- *If you select RECIRCULATED AIR for an extended period of time, the air in the vehicle can become contaminated. Therefore, you should occasionally select FRESH AIR.*
- *If your vehicle has been left in the sun with the windows closed, it will cool faster if you open the windows briefly while you operate the air conditioner with the air intake selector at FRESH AIR and the blower at high speed.*

Dehumidifying
Set the air flow selector to a desired air flow selector position, the temperature selector to the desired temperature position and the blower speed selector to the desired blower speed position. Also select FRESH AIR and turn on “A/C” switch.

NOTE:
Because the air conditioner dehumidifies the air, turning it on will help keep the windows clear, even when blowing heated air using DEFROST or HEAT & DEFROST functions.

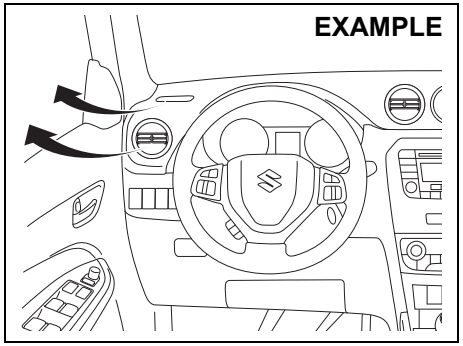

54P000540

NOTE:
If you need maximum defrosting:
- *select DEFROST and FRESH AIR,*
- *set the blower speed selector to high,*
- *adjust the temperature selector to the hot end,*
- *turn on “A/C” switch, and*
- *adjust the side outlets so the air blows on the side windows.*

Maintenance

If you do not use the air conditioner for a long period, such as during winter, it may not give the best performance when you start using it again. To help maintain optimum performance and durability of your air conditioner, it needs to be run periodically. Operate the air conditioner at least once a month for one minute with the engine

idling. This circulates the refrigerant and oil and helps protect the internal components.

If your air conditioner is equipped with air filters, clean or replace them as specified in “Maintenance schedule” in “INSPECTION AND MAINTENANCE” section.

(For EU countries)
NOTE:
Your vehicle uses the air conditioning refrigerant HFO-1234yf, commonly called R-1234yf. R-1234yf replaced R-134a for automotive applications. Other refrigerants are available, but only R-1234yf should be used in your vehicle.

NOTICE
Using the wrong refrigerant may damage your air conditioning system. Use R-1234yf only. Do not mix or replace the R-1234yf with other refrigerants.

(Except for EU countries)
NOTE:
Your vehicle uses the air conditioning refrigerant HFC-134a, commonly called R-134a. R-134a replaced R-12 around 1993 for automotive applications. Other refrigerants are available, including recycled R-12, but only R-134a should be used in your vehicle.

NOTICE
Using the wrong refrigerant may damage your air conditioning system. Use R-134a only. Do not mix or replace the R-134a with other refrigerants.

Automatic heating and air conditioning system (climate control)

Description of controls

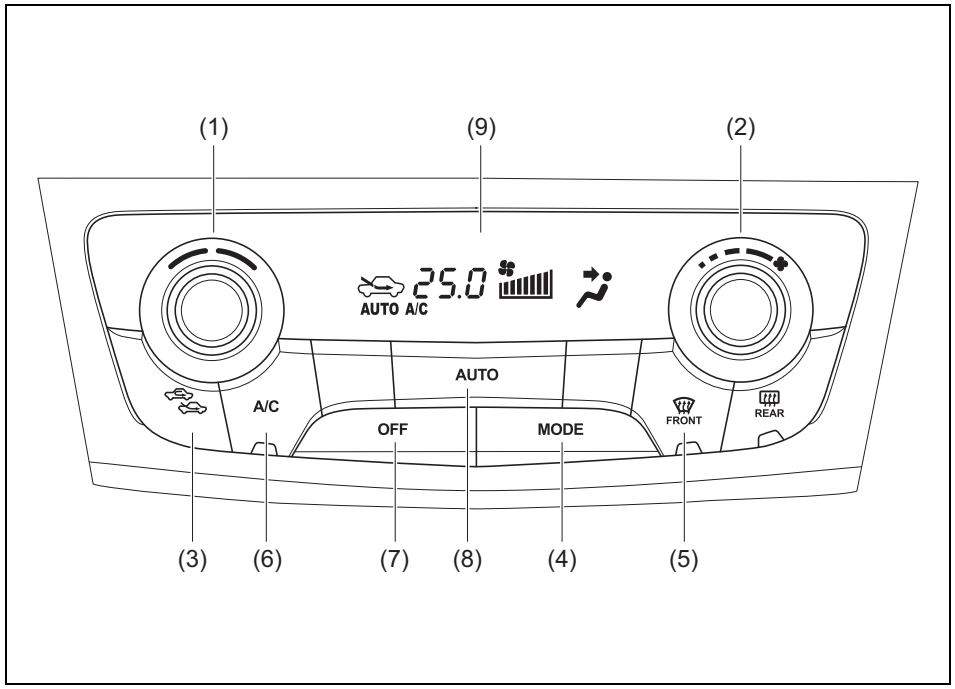

54P000542

(1) Temperature selector
(2) Blower speed selector
(3) Air intake selector
(4) Air flow selector
(5) Defrost switch
(6) Air conditioning switch
(7) “OFF” switch
(8) “AUTO” switch
(9) Display

Temperature selector (1)

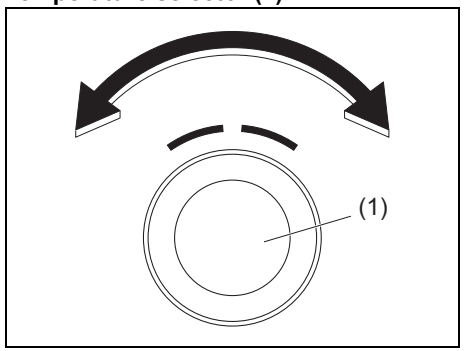

54P000551

Turn the temperature selector (1) to adjust the temperature.

NOTE:
If you turn the temperature selector (1) until "HI" or "LO" appears on the display, the climate control system will operate at maximum heating or cooling. The temperature of the air from the outlets may change suddenly while "LO" or "HI" is displayed, but this is normal.

Blower speed selector (2)

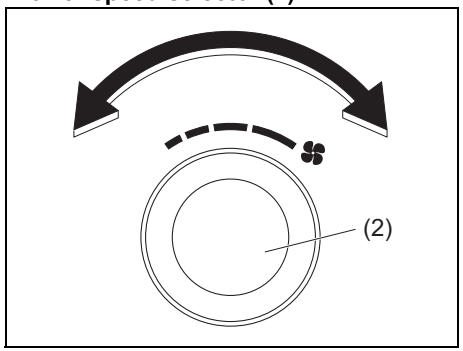

54P000552

The blower speed selector (2) is used to turn on the blower and to select blower speed.

If "AUTO" switch (8) is pushed, the blower speed will vary automatically as the climate control system maintains the selected temperature.

Air intake selector (3)

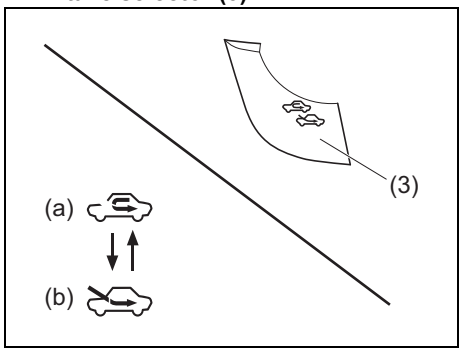

54P000543

Push the air intake selector (3) to change between the following modes.

If "AUTO" switch (8) is pushed, the air intake will vary automatically as the climate control system maintains the selected temperature.

NOTE:
When you select the recirculated air mode, the automatic operation system is deactivated if you push "AUTO" switch (8).

RECIRCULATED AIR (a)
When this mode is selected, outside air is shut off and inside air is recirculated. This mode is suitable when driving through an area with polluted air such as a tunnel, or when attempting to quickly cool down the vehicle.

FRESH AIR (b)
When this mode is selected, outside air is introduced.

FRESH AIR and RECIRCULATED AIR are selected alternately each time the air intake selector is pushed.

NOTE:
If you select RECIRCULATED AIR for an extended period of time, the air in the vehicle can become contaminated. Therefore, you should occasionally select FRESH AIR.

Air flow selector (4)

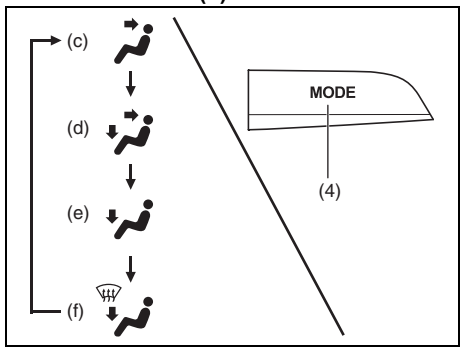

54P000544

Push the air flow selector (4) to change among the following functions. The indication of the selected mode appears on the display.

If “AUTO” switch (8) is pushed, the air flow will vary automatically as the climate control system maintains the selected temperature.

VENTILATION (c)

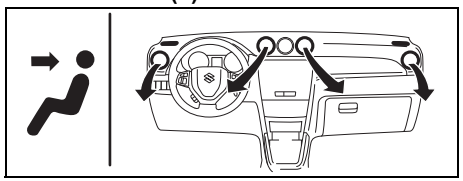

54P000535

Temperature-controlled air comes out of the center, side and rear air outlets.

BI-LEVEL (d)

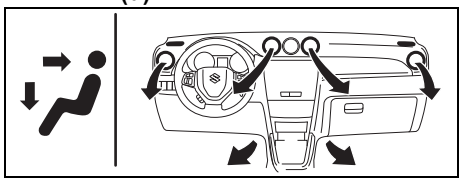

54P000536

Temperature-controlled air comes out of the floor outlets and cooler air comes out of the center, side and rear outlets. When the temperature selector (1) is in the fully cold position or fully hot position, however, the air from the floor outlets and the air from the center, side and rear outlets will be the same temperature.

HEAT (e)

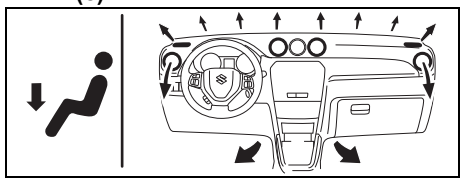

54P000537

Temperature-controlled air comes out of the floor outlets and the side outlets, a small amount of air comes out of the windshield defroster outlets and also comes slightly out of the side defroster outlets.

HEAT & DEFROST (f)

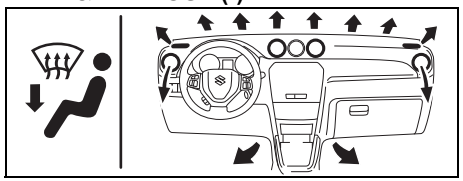

54P000538

Temperature-controlled air comes out of the floor outlets, the windshield defroster outlets, the side defroster outlets and the side outlets.

Defrost switch (5)

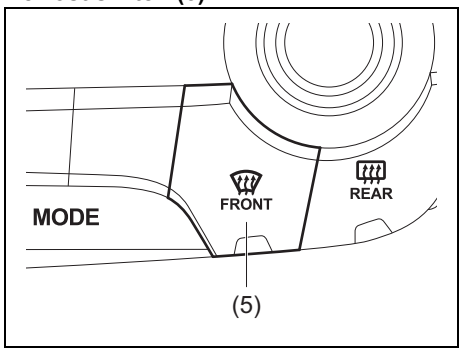

54P000545

Push the defrost switch (5) to turn on the defroster.

DEFROST

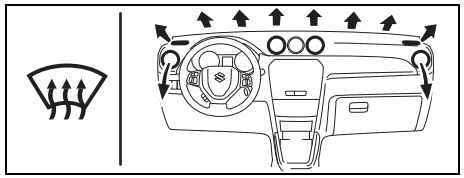

54P000539

Temperature-controlled air comes out of the windshield defroster outlets, the side defroster outlets and the side outlets.

NOTE:
When the defrost switch (5) is pushed to turn on the defroster, the air conditioning system will come on and FRESH AIR mode will be selected automatically. In very cold weather, however, the air conditioning system will not turn on.

Air conditioning switch (6)

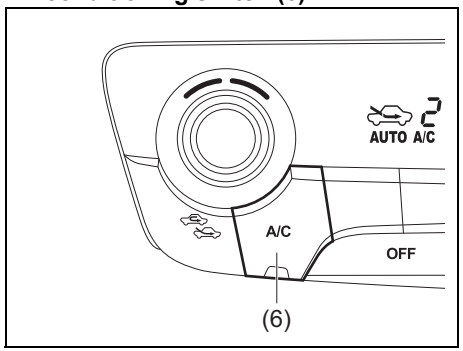

54P000546

The air conditioning switch (6) is used to turn on and off the air conditioning system only when the blower is on. To turn on the air conditioning system, push in the switch and “A/C” will appear on the display. To turn off the air conditioning system, push in the switch again and “A/C” will go off.

System operating instructions

Automatic operation

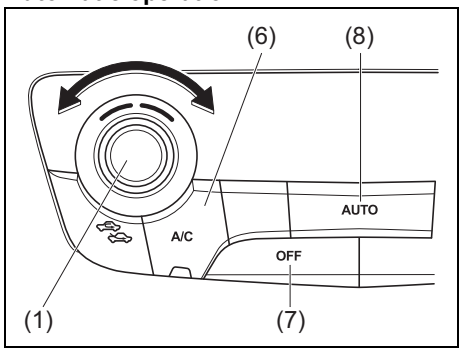

54P000547

You can let the climate control system work automatically. To set the system for fully-automatic operation, follow the procedure below.

1) Start the engine.
2) Push “AUTO” switch (8).
3) Set the desired temperature by turning the temperature selector (1).

The blower speed, air intake and air flow are controlled automatically to maintain the set temperature. However, the air flow is not changed to DEFROST position automatically.

NOTE:
When you select the recirculated air mode, the automatic operation system is deactivated if you push “AUTO” switch (8).

You can use the air conditioning switch (6) to manually turn the air conditioner on or off according to your preference. When you turn the air conditioning switch off, the climate control system cannot lower the inside temperature below outside temperature.

To turn the climate control system off, push “OFF” switch (7).

NOTE:
If “AUTO” on the display blinks, there is a problem in the heating system and/or air conditioning system. You should have the system inspected by an authorized SUZUKI dealer.

NOTE:
- *To find the temperature at which you are most comfortable, start with the 22°C (72°F) or 25°C (75°F) setting. (the temperature vary depending on vehicle specifications.).*
- *If you turn the temperature selector (1) until “HI” or “LO” appears on the display, the climate control system will operate at maximum heating or cooling and the blower will run at full speed.*
- *To avoid blowing cold air in cold weather or hot air in hot weather, the system will delay turning on the blower until warmed or chilled air is available.*
- *If your vehicle has been left in the sun with the windows closed, it will cool faster if you open the windows briefly.*
- *Even under the automatic operation, you can set individual selectors to the manual mode. The manually selected functions are maintained, and the other functions remain under automatic operation.*
- *If the windshield and/or the front door windows are fogged, push the defrost switch (5) to turn on the defroster, or push the air flow selector (4) to change the air flow to HEAT & DEFROST position to defog the windows.*
- *To return the blower speed selector (2), air intake selector (3), and air flow selector (4) to automatic operation, push “AUTO” switch (8).*

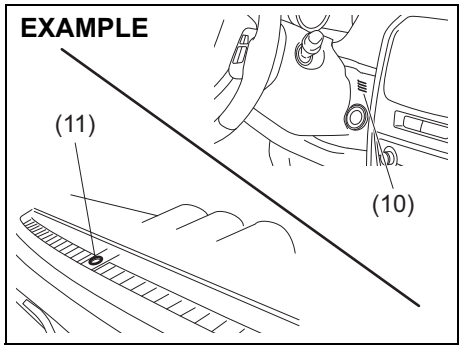

54P000548

Be careful not to cover the interior temperature sensor (10) located between the steering wheel and the climate control panel, or the solar sensor (11) located at the top of the driver’s side dashboard. These sensors are used by the automatic system to regulate temperature.

Manual operation

You can manually control the climate control system. Set the selectors to the desired positions.

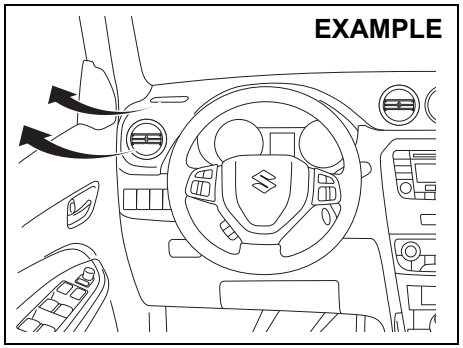

54P000540

NOTE:
If you need maximum defrosting:
- *push the defrost switch (5) to turn on the defroster (the air conditioning system will come on and FRESH AIR mode will be selected automatically),*
- *set the blower speed selector to high,*
- *adjust the temperature selector to “HI” indication on the display, and*
- *adjust the side outlets so the air blows on the side windows.*

Maintenance

If you do not use the air conditioner for a long period, such as during winter, it may not give the best performance when you start using it again. To help maintain optimum performance and durability of your air conditioner, it needs to be run periodically. Operate the air conditioner at least once a month for one minute with the engine idling. This circulates the refrigerant and oil and helps protect the internal components.

Your air conditioner is equipped with air filters. Clean or replace them as specified in “Maintenance schedule” in “INSPECTION AND MAINTENANCE” section. Have this job done by your SUZUKI dealer as the lower glove box must be lowered for this job.

(For EU countries)
NOTE:
Your vehicle uses the air conditioning refrigerant HFO-1234yf, commonly called R-1234yf. R-1234yf replaced R-134a for automotive applications. Other refrigerants are available, but only R-1234yf should be used in your vehicle.

NOTICE
Using the wrong refrigerant may damage your air conditioning system. Use R-1234yf only. Do not mix or replace the R-1234yf with other refrigerants.

(Except for EU countries)
NOTE:
Your vehicle uses the air conditioning refrigerant HFC-134a, commonly called R-134a. R-134a replaced R-12 around 1993 for automotive applications. Other refrigerants are available, including recycled R-12, but only R-134a should be used in your vehicle.

NOTICE
Using the wrong refrigerant may damage your air conditioning system. Use R-134a only. Do not mix or replace the R-134a with other refrigerants.

Radio antenna

Type A

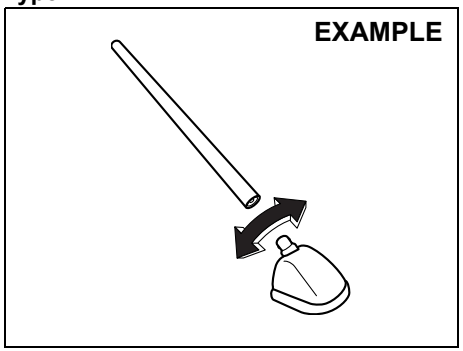

63J055

Type B

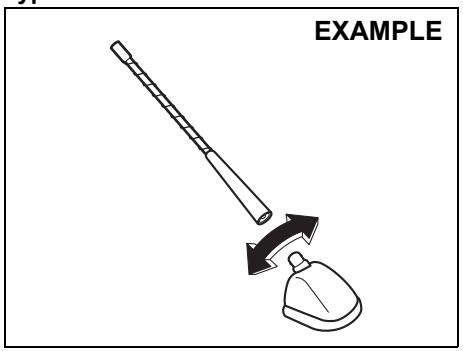

61MM0A113

The radio antenna on the roof is removable. To remove the antenna, turn it counterclockwise. To reinstall the antenna, turn it clockwise firmly by hand.

NOTICE

To avoid damage to the radio antenna:
- **Remove the antenna when using an automatic car wash.**
- **Remove the antenna when the antenna hits anything such as a low ceiling in a parking garage or putting a car cover over your vehicle.**

Installation of radio frequency transmitters

NOTE:
When you intend to use Radio Frequency (RF) transmitting equipment in your vehicle, refer to "Installation of radio frequency (RF) transmitting equipment" in the end of this book.

NOTICE

Improper installation of mobile communication equipment such as cellular telephones, CB (Citizen's Band) radios or any other wireless transmitters may cause electronic interference with your vehicle's ignition system, resulting in vehicle performance problems. Consult your SUZUKI dealer or qualified service technician for advice.

Audio system (Type A / Type B) (if equipped)

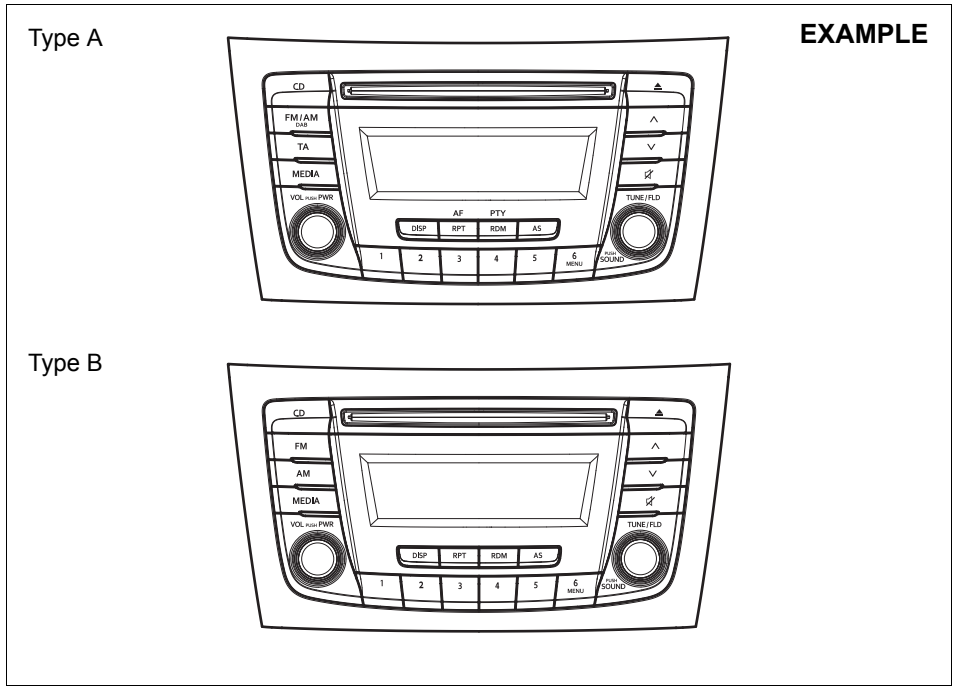

84MM00515

Type A: FM/LW/MW CD player
Type B: AM/FM CD player

Safety information

⚠ WARNING

If you pay too much attention to operating the audio system or viewing the audio system display while driving, an accident can occur. If you set the sound volume too loud, it could prevent you from being aware of road and traffic conditions.

- **Keep your eyes on the road and your mind on the drive. Avoid paying too much attention to operating the audio system or viewing the audio system display.**
- **Familiarize yourself with the audio system controls and operation of the audio system before driving.**
- **Preset your favorite radio stations before driving so that you can quickly tune to them using the presets.**
- **Set the sound volume to a level that will allow you to continue to be aware of road and traffic conditions while driving.**

Notes on discs

Precautions

- When the inside of the vehicle is very cold and the player is used soon after switching on the heater, condensation may form on the disc or the optical parts of the player and proper playback may not be possible. If condensation forms on the disc, wipe it off with a soft cloth. If condensation forms on the optical parts of the player, do not use the player for about one hour. This will allow the condensation to disappear normally.
- Driving on extremely bumpy roads which cause severe vibrations may cause sound to skip.
- This unit uses a precision mechanism. Even in the event that trouble arises, never open the case, disassemble the unit, or lubricate the rotating parts. Bring the unit to an authorized SUZUKI dealer.

Cautions on handling

52D274

This unit has been designed specifically for playback of compact discs bearing mark (A) shown above.
No other discs can be played.

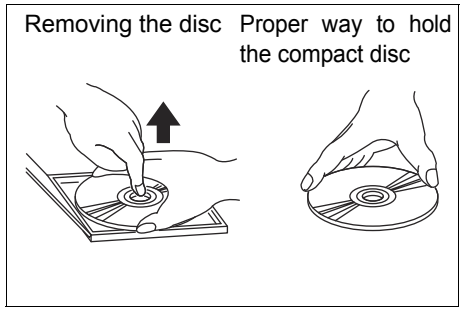

52D275

To remove the compact disc from its storage case, press down on the center of the case and lift the disc out, holding it carefully by the edges.

Always handle the compact disc by the edges.
Never touch the surface.

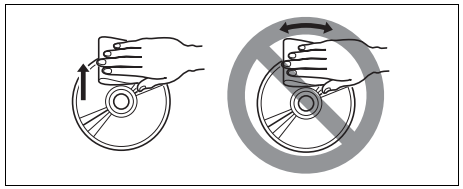

52D347

To remove fingermarks and dust, use a soft cloth, and wipe in a straight line from the center of the compact disc to the circumference.

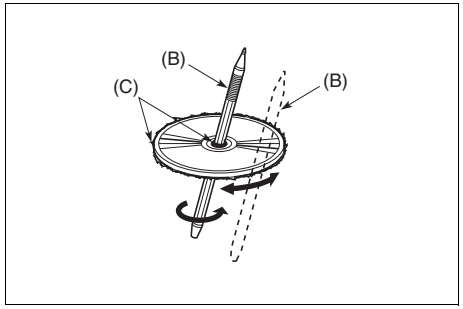

52D277

New discs may have some roughness around the edges. The unit may not work or the sound may skip if such discs are used. Use a ball-point pen (B), etc. to remove the roughness (C) from edges of the disc before inserting it into the unit.

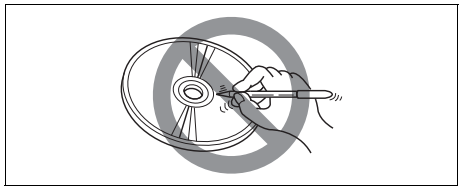

52D348

Never stick labels on the surface of the compact disc or write on the surface with a pencil or pen.

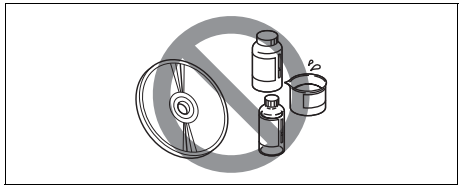

52D349

Do not use any solvents such as commercially available cleaners, anti-static spray, or thinner to clean compact discs.

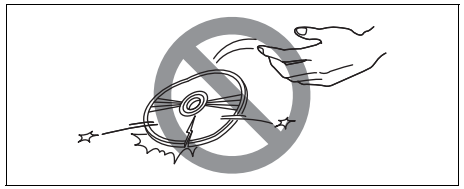

52D350

Do not use compact discs that have large scratches, are misshaped, or cracked, etc. Use of such discs will cause damage or prevent the system from operating properly.

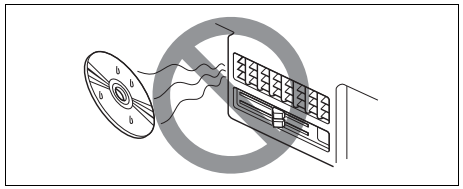

52D351

Do not expose compact discs to direct sunlight or any heat source.

NOTE:

- *Do not use commercially available CD protection sheets or discs equipped with stabilizers, etc.*
  These may get caught in the internal mechanism and damage the disc.
- *It may be impossible to play CD-R discs with this unit due to the recording conditions.*
- *CD-RW discs cannot be played with this unit.*

⚠ WARNING

This is a class I laser product. Use of controls or adjustments or performance of procedures other than those specified herein may result in hazardous radiation exposure.
Do not open covers and do not attempt to repair this unit by yourself.
Ask an authorized dealer for the repair.

"Questo prodotto e' conforme al DM 28/8/1955, N.548, ottemperando alle prescrizioni di cui al DM 25/6/1985 (par. 3, All. A) e DM 27/8/1987 (All. I)."

Bluetooth®

The Bluetooth® word mark and logo are registered trademarks and are owned by the Bluetooth SIG, Ink.

Stop using this unit and a Bluetooth® ready device whenever requested.
This unit shares the communication frequency with other private or public wireless communication equipment such as a wireless LAN and other wireless communication radios.
You should stop using this unit whenever you are notified that your unit disturbs other wireless communication immediately.

CE

The latest "DECLARATION of CONFORMITY" (DoC) is available at the following address:

http://www.ptc.panasonic.eu/

To check DoC, access the above mentioned URL.
And then search DoC by entering the following Model No. into "Keyword Search" box in "Downloads" page.

Model No. YEP0PTA606A0

Information on disposal for users of waste electrical & electronic equipment (private households)

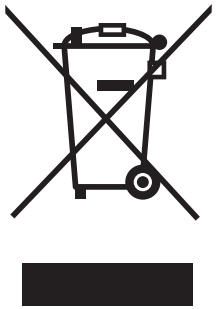

This symbol on the products and/or accompanying documents means that used electrical and electronic products should not be mixed with general household waste.
For proper treatment, recovery and recycling, please take these products to designated collection points, where they will be accepted on a free of charge basis. Alternatively, in some countries you may be able to return your products to your local retailer upon the purchase of an equivalent new product.
Disposing of this product correctly will help to save valuable resources and prevent any potential negative effects on human health and the environment which could otherwise arise from inappropriate waste handling. Please contact your local authority for further details of your nearest designated collection point.
Penalties may be applicable for incorrect disposal of this waste, in accordance with national legislation.

For business users in the European Union
If you wish to discard electrical and electronic equipment, please contact your dealer or supplier for further information.

Information on disposal in other countries outside the European Union
This symbol is only valid in the European Union.
If you wish to discard this product, please contact your local authorities or dealer and ask for the correct method of disposal.

CE Declaration of Conformity (Doc)
"Hereby Panasonic Corporation, declares that this YEP0PTA606A0 is in compliance with the essential requirements and other relevant provision of Directive 1999/5/EC"

Part 15 of the FCC Rules
FCC Warning:
Any unauthorized changes or modifications to this equipment would void the user's authority to operate this device.

⚠ WARNING

This is a class I laser product. Use of controls or adjustments or performance of procedures other than those specified herein may result in hazardous radiation exposure.

Do not open covers and do not attempt to repair this unit by yourself. Ask an authorized dealer for the repair.

Bluetooth®

The Bluetooth® word mark and logo are registered trademarks and are owned by the Bluetooth SIG, Ink.

NOTE:
This equipment complies with FCC radiation exposure limits set forth for uncontrolled equipment and meets the FCC radio frequency (RF) Exposure Guidelines in Supplement C to OET65. This equipment has very low level of RF energy which does not comply with maximum permissive exposure (MPE) evaluation. But it is desirable that it should be installed and operated with at least 20cm and more between the radiator and person's body (excluding extremities: hands, wrists, feet and ankles).

Stop using this unit and a Bluetooth® ready device whenever requested.
This unit shares the communication frequency with other private or public wireless communication equipment such as a wireless LAN and other wireless communication radios.
You should stop using this unit whenever you are notified that your unit disturbs other wireless communication immediately.

FCC ID: ACJ932YEP0PTA606

This device complies with Part 15 of FCC Rules and RSS-210 of Industry Canada.
Operation is subject to the following two conditions: (1) this device may not cause interference, and (2) this device must accept any interference, including interference that may cause undesired operation of this device.

■ **Certificación para la unidad del teléfono manos libres**
Este equipo tiene instalado una unidad de manos libre Bluetooth®
(Tipo: YEP0PTA606A0).
YEP0PTA606A0 cumple con la LEY FEDERAL DE TELECOMUNICACIONES. No. de certificación es COFETEL: RCPPYE14-0724.

NOTE:
This equipment has been tested and found to comply with the limits for a Class B digital device, pursuant to part 15 of the FCC Rules. These limits are designed to provide reasonable protection against harmful interference in a residential installation. This equipment generates, uses and can radiate radio frequency energy and, if not installed and used in accordance with the instructions, may cause harmful interference to radio communications. However, there is no guarantee that interference will not occur in a particular installation. If this equipment does cause harmful interference to radio or television reception, which can be determined by turning the equipment off and on, the user is encouraged to try to correct the interference by one or more of the following measures:

- *Reorient or relocate the receiving antenna.*
- *Increase the separation between the equipment and receiver.*
- *Connect the equipment into an outlet on a circuit different from that to which the receiver is connected.*
- *Consult the dealer or an experienced radio/TV technician for help.*
- *This transmitter must not be co-located or operated in conjunction with any other antenna or transmitter.*

Basic operations

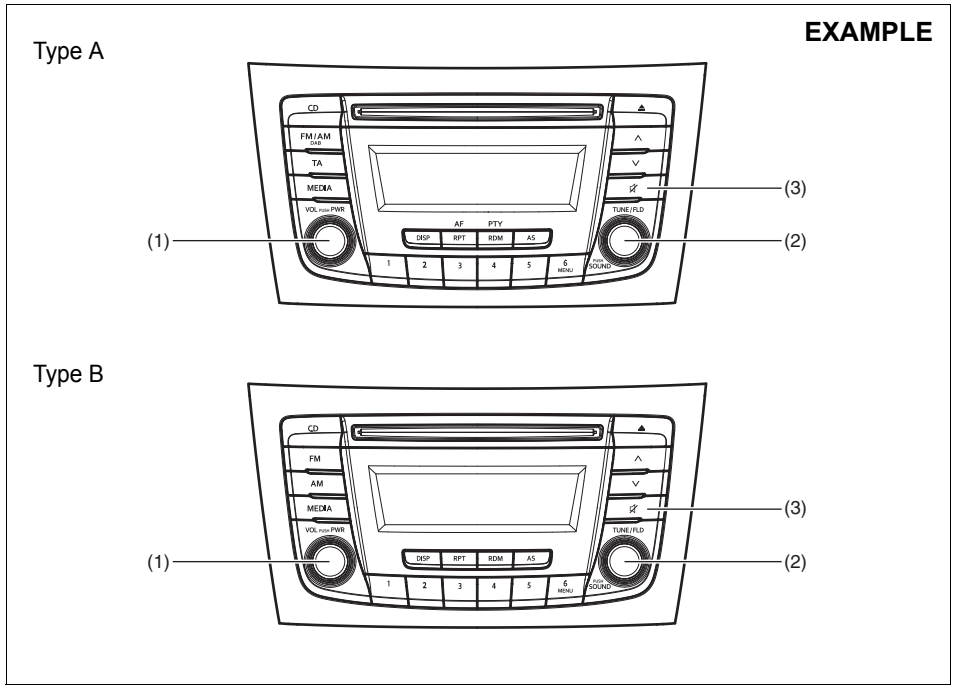

84MM00516

(1) “VOL PUSH PWR” knob
(2) “TUNE/FLD PUSH SOUND” knob
(3) MUTE button

Turning on/off power
Press “VOL PUSH PWR” knob (1) to turn on the power. The unit starts to operate in the previous setting that the power was turned off.

Adjusting the volume
Turn “VOL PUSH PWR” knob (1).
Turning it clockwise increases the volume; turning it counterclockwise decreases the volume.

NOTE:
For the purposes of safe driving, adjust the audio volume to a level that allows you to hear sounds outside of the vehicle including car horns and particularly emergency vehicle sirens.

Mute
Press MUTE button (3) to mute the sound. To cancel the mute, press MUTE button (3) again.

Adjusting bass/treble/balance/fader

1) Press "TUNE/FLD PUSH SOUND" knob (2).
   Each time the knob is pressed, sound adjustment will change as follows:

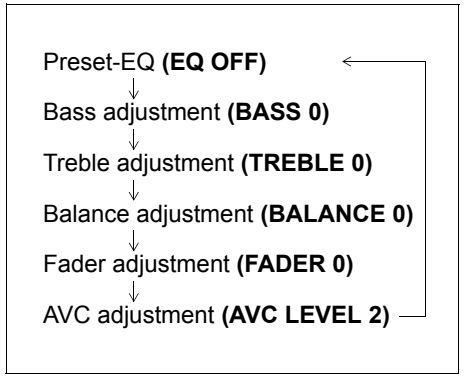

2) Turn "TUNE/FLD PUSH SOUND" knob (2) to adjust the sound.

Adjusting the AVC (Auto volume control)

The Auto Volume Control (AVC) function automatically adjusts (increases/decreases) the sound volume in accordance with vehicle speed. The AVC control is provided with three selectable levels (LEVEL OFF, 1, 2, 3). The range of volume adjustment increases together with the LEVEL number.

1) Press "TUNE/FLD PUSH SOUND" knob (2) until the AVC adjustment mode is selected.
2) Turn "TUNE/FLD PUSH SOUND" knob (2) to select the desired AVC adjustment level. (Initial setting: LEVEL 2)

Preset-EQ

Preset-EQ calls up various sound types in accordance with the listening music type.

1) Press "TUNE/FLD PUSH SOUND" knob (2) several times until "PRESET-EQ" appears.
2) Turn "TUNE/FLD PUSH SOUND" knob (2).
   Each time the knob is turned, preset EQ mode will change as follows:

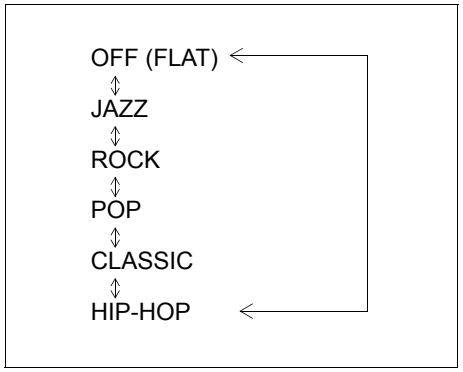

Listening to the radio (Type A)

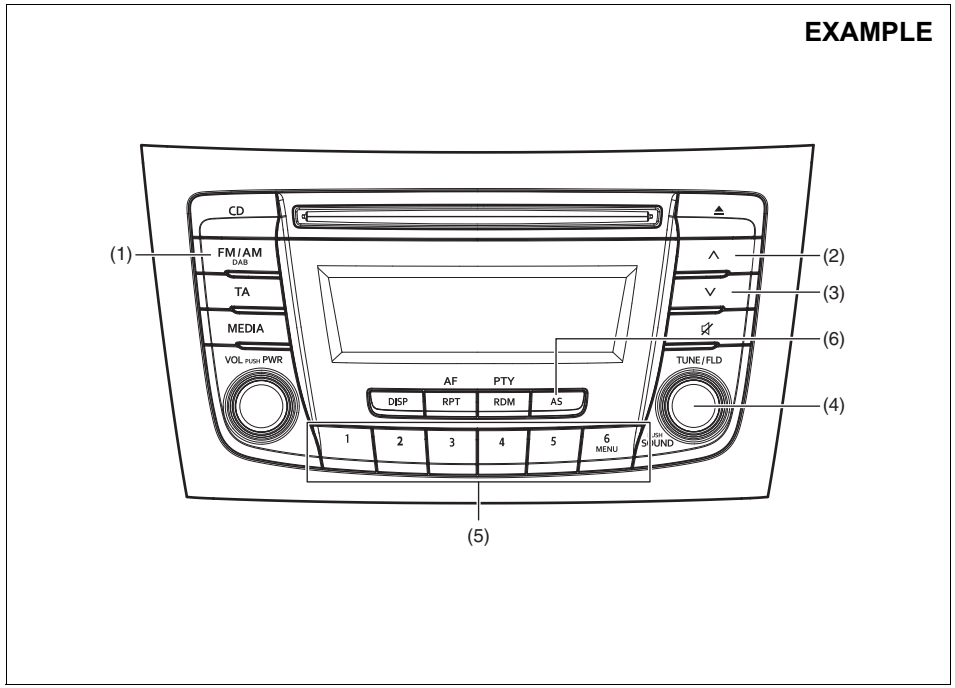

84MM00517

Display

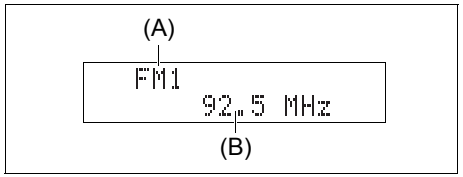

68LM561

(1) “FM/AM/DAB” (if equipped) button
(2) UP button
(3) DOWN button
(4) “TUNE/FLD PUSH SOUND” knob
(5) PRESET buttons ([1] to [6])
(6) “AS” button

(A) Band
(B) Frequency

Selecting the reception band
Press the “FM/AM/DAB” button (1).
Each time the button is pressed, the reception band will change as follows:

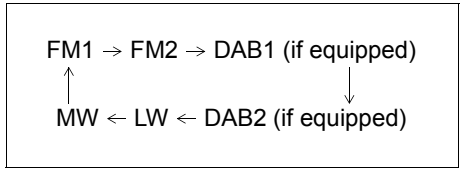

Seek tuning
Press UP button (2) or DOWN button (3).
The unit stops searching for a station at a frequency where a broadcast station is available.

NOTE:
If AF is on, the unit searches for RDS stations only.

Manual tuning
Turn “TUNE/FLD PUSH SOUND” knob (4).
The frequency being received is displayed.

Preset memory
1) Select the desired station.
2) Hold down a desired button ([1] to [6]) of PRESET buttons (5) to which you want to store the station for 2 seconds or longer.

Auto store
Hold down “AS” button (6) for 2 seconds or longer.
6 stations in good reception will automatically be stored to PRESET buttons (5) in order, starting from a station whose frequency is the lowest.

NOTE:
- *Auto store can be released by pressing “AS” button (6) while auto store is under way.*
- *When the auto store is performed, the station previously stored in the memory at the position is overwritten.*
- *When there are fewer than 6 stations that can be stored even if 1 round of auto store operation is performed, no station will be stored at the remaining PRESET buttons (5).*
- *6 stations can be preset for FM1 and FM2 in common, and 6 stations for MW in auto store mode.*
- *If AF is on, the unit searches for RDS stations only.*

Auto store mode on/off
Press “AS” button (6).
Each time the button is pressed, the mode is switched as follows:

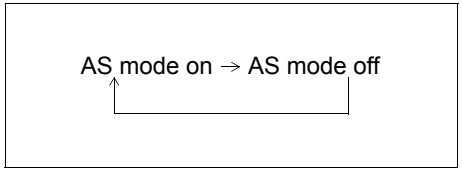

Radio reception
Radio reception can be affected by environment, atmospheric conditions, or radio signal’s power and distance from the station. Nearby mountains and buildings may interfere or deflect radio reception, causing poor reception. Poor reception or radio static can also be caused by electric current from overhead wires or high voltage power lines.

Listening to the radio (Type B)

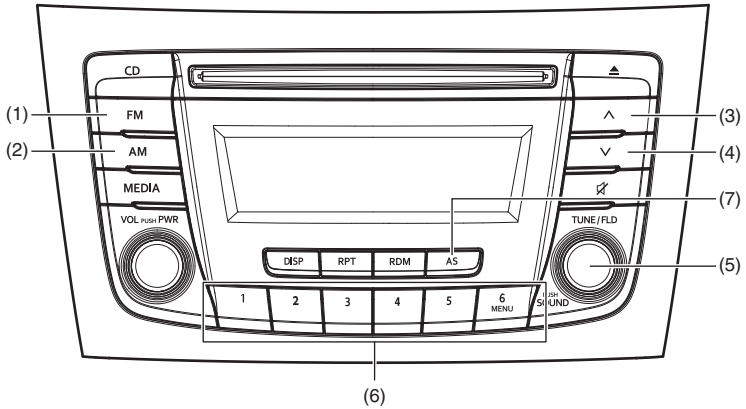

Display

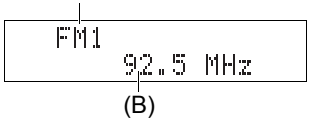

(1) “FM” button
(2) “AM” button
(3) UP button
(4) DOWN button
(5) “TUNE/FLD PUSH SOUND” knob
(6) PRESET buttons ([1] to [6])
(7) “AS” button

(A) Band
(B) Frequency

Selecting the FM band
Press “FM” button (1).
Each time the button is pressed, the reception band will change as follows:

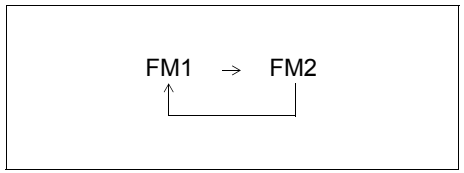

Selecting the AM band
Press “AM” button (2).

Seek tuning
Press UP button (3) or DOWN button (4).
The unit stops searching for a station at a frequency where a broadcast station is available.

Manual tuning
Turn “TUNE/FLD PUSH SOUND” knob (5).
The frequency being received is displayed.

Preset memory
1) Select the desired station.
2) Hold down a desired button ([1] to [6]) of the PRESET buttons (6) to which you want to store the station for 2 seconds or longer.

Auto store
Hold down “AS” button (7) for 2 seconds or longer.
6 stations in good reception will automatically be stored to PRESET buttons (6) in order, starting from a station whose frequency is the lowest.

NOTE:
- *Auto store can be released by pressing “AS” button (7) while auto store is under way.*
- *When the auto store is performed, the station previously stored in the memory at the position is overwritten.*
- *When there are fewer than 6 stations that can be stored even if 1 round of auto store operation is performed, no station will be stored at the remaining PRESET buttons (6).*
- *6 stations can be preset for FM1 and FM2 in common, and 6 stations for AM in auto store mode.*

Auto store mode on/off
Press “AS” button (7).
Each time the button is pressed, the mode is switched as follows:

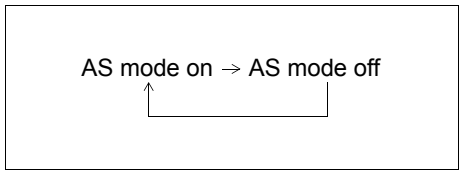

Radio reception
Radio reception can be affected by environment, atmospheric conditions, or radio signal’s power and distance from the station. Nearby mountains and buildings may interfere or deflect radio reception, causing poor reception. Poor reception or radio static can also be caused by electric current from overhead wires or high voltage power lines.

Using the RDS functions (Type A)

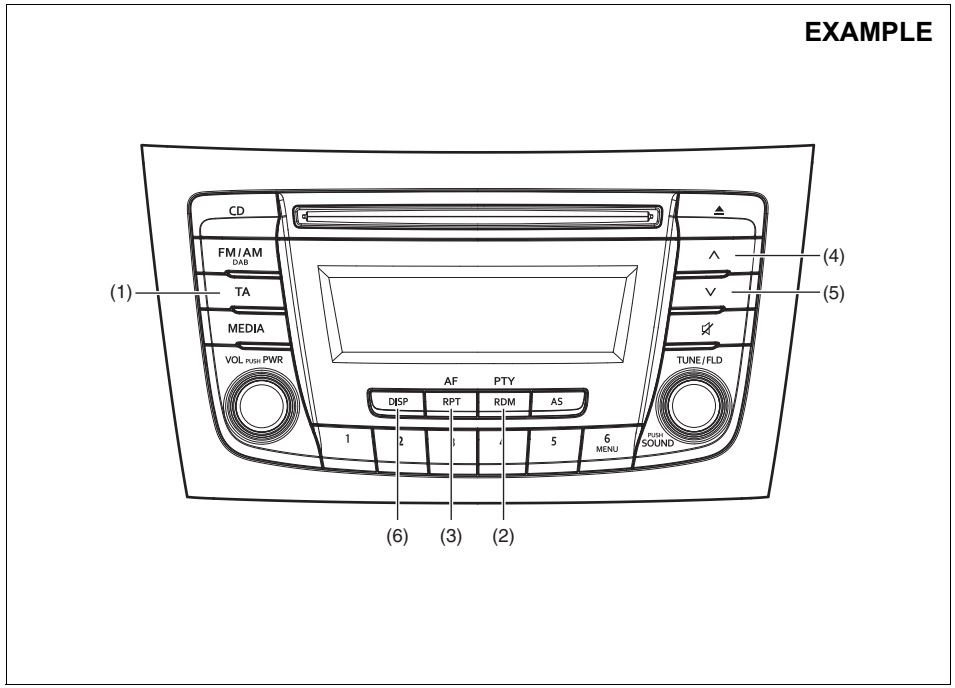

84MM20503

Display

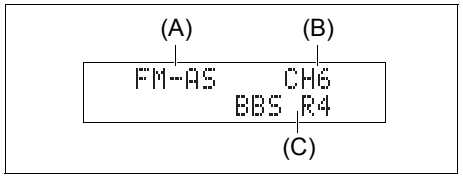

68LM562

(1) “TA” button
(2) “RDM/PTY” button
(3) “RPT/AF” button
(4) UP button
(5) DOWN button
(6) “DISP” button

(A) Band
(B) Channel number
(C) Program service (PS) name

TA (Traffic Announcement) on/off

Press “TA” button (1).

Each time it is pressed, TA adjustment is changed as follows:

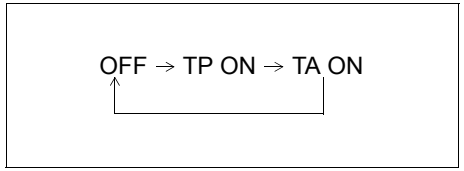

NOTE:

- *For listening to only traffic information, activate TA. Once traffic information starts, the volume changes automatically.*
- *“TP” indicator lights up when TP (Traffic Program) is on. It blinks when no TP data is received.*
- *“TA” indicator lights while TA is activated. On the other hand, “TA” indicator blinks if the TP data cannot be received.*
- *If UP button (4) or DOWN button (5) is pressed while TA or TP is set to on, the unit searches for a TP station.*
- *If no TP station is received, the unit displays “TP NOTHING”.*

PTY (Program Type) search

1) Press “RDM/PTY” button (2) to select PTY mode.
2) Press “RDM/PTY” button (2) while PTY is displayed.
   Each time it is pressed, PTY adjustment is changed as follows:

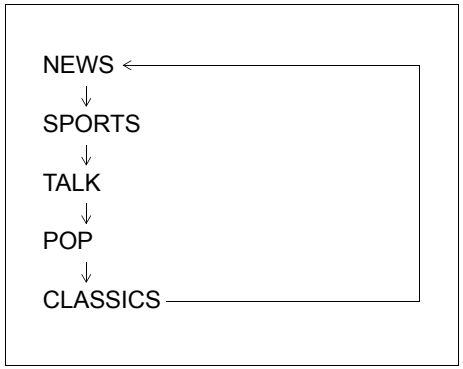

3) Press UP button (4) or DOWN button (5) while PTY is displayed.
   Search begins.

NOTE:

If no PTY information is received, the unit displays “NOPTY”.

AF (Alternative Frequency) on/off

Press “RPT/AF” button (3).

Each time it is pressed, AF adjustment is changed as follows:

AF: If the reception condition becomes poor, the frequency of the same program with good reception is automatically searched.

REG: With regard to the automatically searched frequency with AF activated, the alternative frequency of the same program is searched within the present region when REG is activated.

NOTE:

“AF” indicator lights up when AF is on. In addition, “REG” indicator lights up when REG is on.

TA standby
At the moment traffic information is received while the source is set to CD, USB, iPod®, or Bluetooth®audio with TA activated, the source is automatically changed to radio. After reception of traffic information, the source, which was selected before being changed to radio, resumes.

NOTE:
If no TP station can be received while the unit stands by for TA, it automatically searches for a TP station.

EON (Enhanced Other Network)
When the EON data is received with TP or TA activated, “EON” indicator lights up, and the traffic information from a network other than the currently received station is allowed to be received.

Emergency announcement reception
Emergency announcements are automatically received and displayed.

Listening to a CD

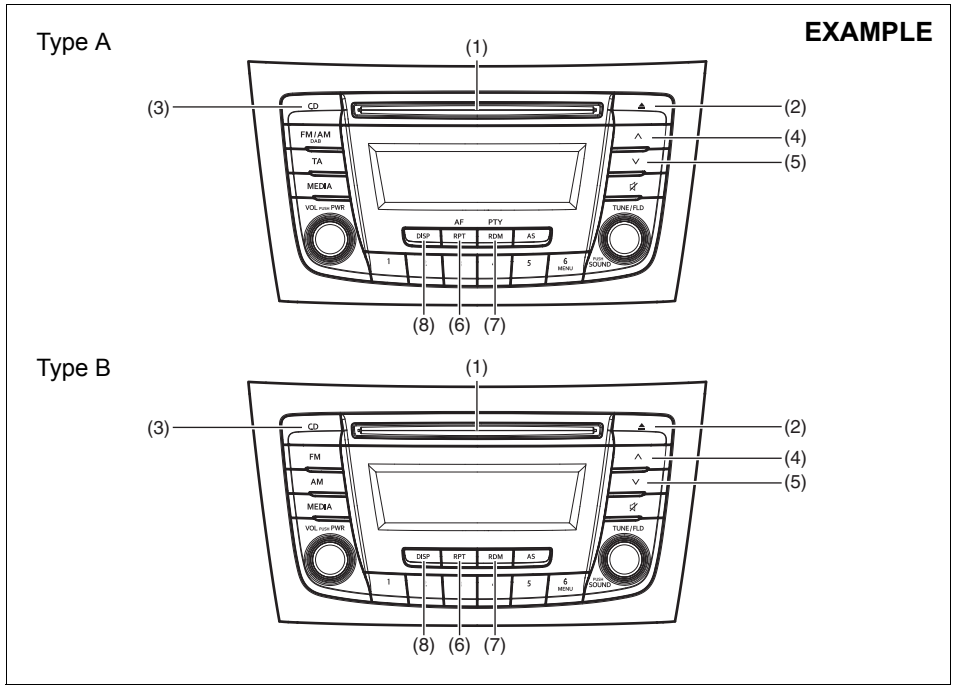

84MM20504

Display

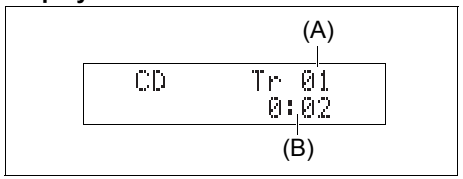

(1) Insertion slot
(2) EJECT button
(3) “CD” button
(4) UP button
(5) DOWN button
(6) “RPT” button
(7) “RDM” button
(8) “DISP” button

(A) Track number
(B) Play time

NOTE:
This product does not support 8 cm CD (sometimes called as “mini single CD”, “3-inch CD”, “CD3”, etc.).

- CDs or CD-ROMs without mark (A) cannot be used.
- Some discs recorded in CD-R/CD-RW format may sometimes be impossible to use.

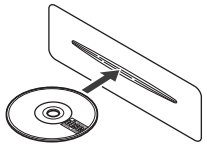

- A CD is to be inserted with its label side up.
- When there is a CD already in the unit, it is impossible to insert another CD without ejecting the CD in the unit. Do not use force to insert a CD into the CD insertion slot.

NOTICE

- **Never insert your finger or hand into the CD insertion slot. Never insert foreign objects.**
- **Never insert a CD with glue coming out from adhesive tape or a rental CD label or with a trace indicating that adhesive tape or a rental CD label has been removed. This may cause the CD not to eject or result in a malfunction.**

Loading a CD
Insert a CD in the insertion slot (1).
When the CD is loaded, it starts to play.

Ejecting a CD
Press EJECT button (2).
When the ignition switch is in “LOCK” position or the engine switch is in “LOCK” (OFF) mode, the CD remained ejected for around 15 seconds or longer will automatically be drawn inside the unit. (Auto reload function)
The backup eject function:
This function allows you to eject a CD by pressing EJECT button (2) even when the ignition switch is in “LOCK” position or the engine switch is in “LOCK” (OFF) mode.

NOTICE

If you forcefully try to push an ejected CD inside the unit before auto reloading, the disc surface might be scratched.
Before reloading a CD, remove it from the unit completely.

Listening to a CD
When a CD is inserted, playback will automatically start.
When a CD is already inside the unit, press “CD” button (3) to start playback.

Selecting a track
- Press UP button (4) to listen to the next track.
- Press DOWN button (5) twice to listen to the previous track.
  When DOWN button (5) is pressed once, the track currently being played will start from the beginning again.

Fast forwarding/rewinding a track
- Hold down UP button (4) to fast forward the track.
- Hold down DOWN button (5) to fast rewind the track.

Random playback
Press “RDM” button (7).
Each time the button is pressed, the mode will change as follows:

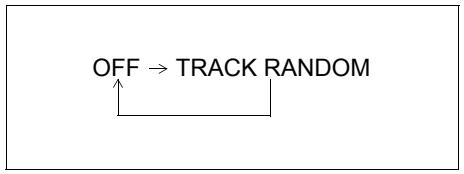

- TRACK RANDOM
  The random indicator “RDM” will light.
  The tracks in the loaded disc will be played in random order.

Repeat playback
Press “RPT” button (6).
Each time the button is pressed, the mode will change as follows:

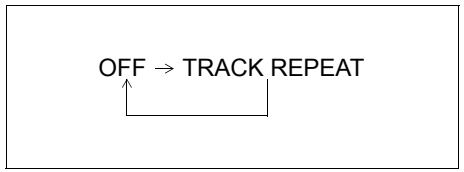

- TRACK REPEAT
  The repeat indicator “RPT” will light.
  The track currently being played will be played repeatedly.

Display change
Press “DISP” button (8).
Each time the button is pressed, display will change as follows:

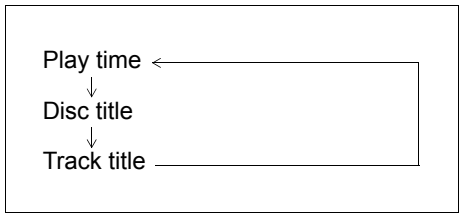

NOTE:
- *“NO TITLE” will be displayed when there is no text information in the disc currently being played.*
- *If text data contains more than 16 characters, “>” mark will appear at the right end. Holding down “DISP” button (8) for 1 second or longer can display the next page.*

Listening to an MP3/WMA/AAC disc

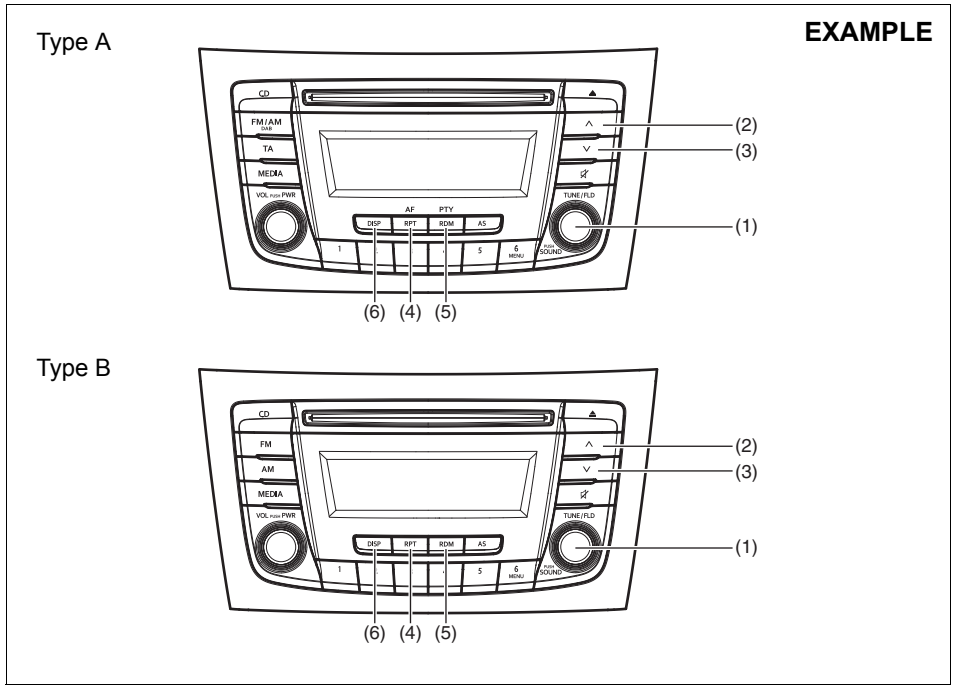

84MM00521

Display

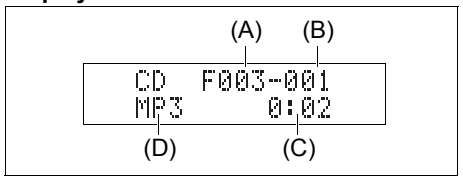

(1) “TUNE/FLD PUSH SOUND” knob
(2) UP button
(3) DOWN button
(4) “RPT” button
(5) “RDM” button
(6) “DISP” button

(A) Folder number
(B) Track number
(C) Play time
(D) Disc type

Selecting a folder
Turn “TUNE/FLD PUSH SOUND” knob (1) to select a folder.

Selecting a track
- Press UP button (2) to listen to the next track.
- Press DOWN button (3) twice to listen to the previous track.
  When DOWN button (3) is pressed once, the track currently being played will start from the beginning again.

Fast forwarding/rewinding a track
- Hold down UP button (2) to fast forward the track.
- Hold down DOWN button (3) to fast rewind the track.

Random playback
Press “RDM” button (5).
Each time the button is pressed, the mode will change as follows:

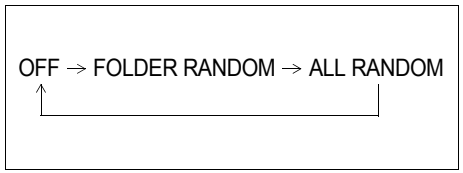

- FOLDER RANDOM
  The random indicator “F.RDM” will light.
  The tracks in the current folder will be played in random order.
- ALL RANDOM
  The random indicator “RDM” will light.
  The tracks in the loaded disc will be played in random order.

Repeat playback
Press “RPT” button (4).
Each time the button is pressed, the mode will change as follows:

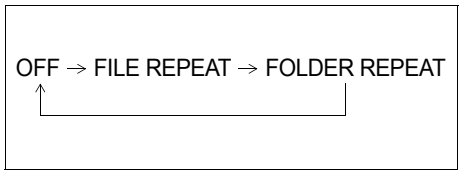

- FILE REPEAT
  The repeat indicator “RPT” will light.
  The track currently being played will be played repeatedly.
- FOLDER REPEAT
  The repeat indicator “F.RPT” will light.
  All tracks in the currently selected folder will be played repeatedly.

Display change
Press “DISP” button (6).
Each time the button is pressed, display will change as follows:

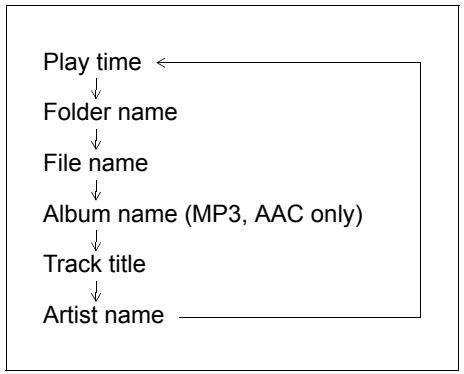

NOTE:
- *“NO TITLE” will be displayed when there is no text information in the disc currently being played.*
- *If text data contains more than 16 characters, “>” mark will appear at the right end. Holding down “DISP” button (6) for 1 second or longer can display the next page.*

Notes on MP3/WMA/AAC

What is MP3?
- An abbreviation of “MPEG audio layer3”, MP3 is an audio compression format that has become the standard format among PC users. Its merit is that the original audio data is compressed to approximately 1/10 and high sound quality is maintained. This means that it is possible to store the data of approximately 10 music CDs on a single CD-R/RW disc, which in turn makes it possible to play music for a long time without having to change the disc.

What is WMA?
- An abbreviation of “Windows Media Audio,” WMA is an audio compression format developed by Microsoft.
- WMA files for which the DRM (Digital Rights Management) function is on cannot be played.
- Windows Media™ and the Windows® logo are trademarks or registered trademarks of Microsoft Corporation in the United States and other countries.

What is AAC?
- An abbreviation of “Advanced Audio Coding,” AAC is an audio compression format used by MPEG2 and MPEG4.

Points to remember when making MP3/WMA/AAC files
Common
- High bit rate and high sampling frequency are recommended for high quality sounds.
- Selecting VBR (Variable Bit Rate) is not recommended. Selecting VBR may cause display of incorrect playing time and jumpiness of playback.
- Playback sound quality varies depending on the encoding environment. For details, refer to the user manual of the encoding software and the writing software in use.

NOTICE

Never use “.mp3”, “.wma” or “.m4a” as a file name extension if it is not in the MP3/WMA/AAC format file. Failure to observe this may result in damage to the speaker due to noise production.

Recording MP3/WMA/AAC files on a CD media

- It is recommended not to write both CD-DA files and MP3/WMA/AAC files on a disc.
- If both CD-DA files and MP3/WMA/AAC files are on the same disc, tracks may not be played in the correct order or some tracks may not be played at all.
- When storing both MP3 data and WMA data on the same disc, sort and place them in different folders.
- Do not write files other than MP3/WMA/AAC files and unnecessary folders on a disc.
- MP3/WMA/AAC files should be named to meet the standards and the file system specifications as shown below.
- The file extension ".mp3", ".wma" or ".m4a" should be assigned to files based on their format independently.
- You may encounter a trouble in playing MP3/WMA/AAC files or displaying information of MP3/WMA/AAC files depending on the writing software or CD recorder in use.
- This unit does not have a playlist function.
- It is recommended to write discs in Disc-at-Once mode even though Multi-session mode is supported. These modes are the methods for writing audio data in CD.

Compression formats

MP3

- Bit rate:
  MPEG1 Audio Layer III: 32 k - 320 kbps
  MPEG2 Audio Layer III: 8 k - 160 kbps
  MPEG2.5 Audio Layer III: 8 k - 160 kbps
- Sampling frequency:
  MPEG1 Audio Layer III: 32 k/44.1 k/48 kHz
  MPEG2 Audio Layer III: 16 k/22.05 k/24 kHz
  MPEG2.5 Audio Layer III: 8 k/11.025 k/12 kHz

WMA (Ver. 7, Ver. 8, Ver. 9*)

- Bit rate: CBR 32 k - 320 kbps
- Sampling frequency: 32 k/44.1 k/48 kHz

* WMA 9 Professional/LossLess/Voice are not supported.

AAC*

- Bit rate: ABR 16 k - 320 kbps
- Sampling frequency: 32 k/44.1 k/48 kHz

* Apple Lossless is not supported.

Supported file systems

ISO 9660 Level 1/Level 2, Joliet, Romeo

Maximum number of files/folders

- Maximum number of files: 512
- Maximum number of files in a folder: 255
- Maximum depth of tree structure: 8
- Maximum number of folders: 255
  (Root folder is included.)

Listening to files stored in a USB device

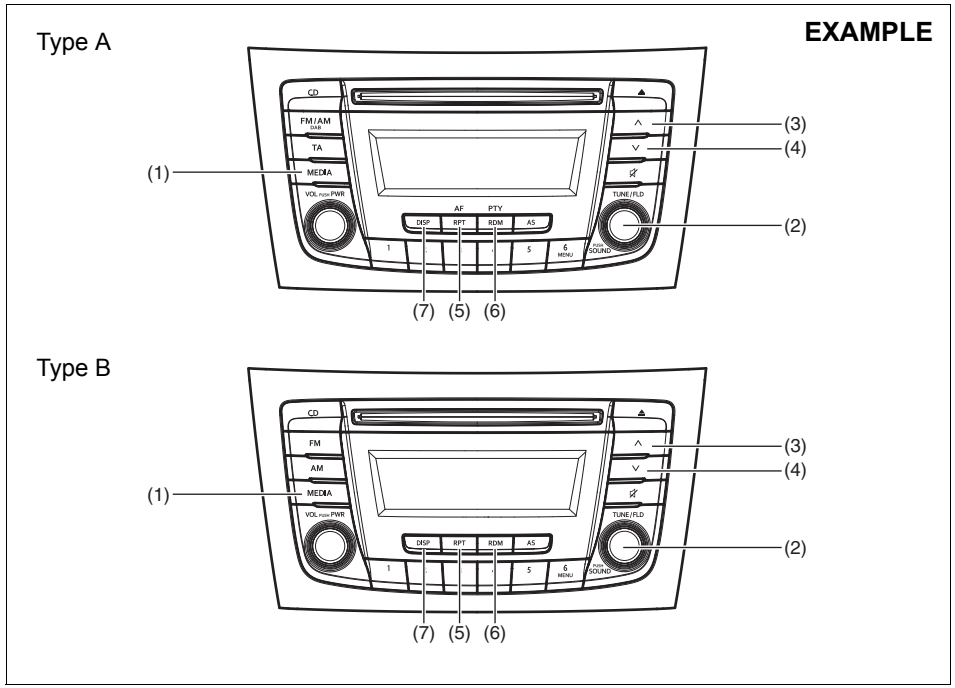

84MM00522

Display

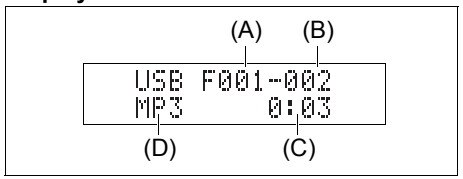

(1) “MEDIA” button
(2) “TUNE/FLD PUSH SOUND” knob
(3) UP button
(4) DOWN button
(5) “RPT” button
(6) “RDM” button
(7) “DISP” button

(A) Folder number
(B) Track number
(C) Play time
(D) File type

NOTICE

Do not connect any USB device other than a USB memory or a USB audio player. Do not connect multiple USB devices to the USB connector using a USB hub, etc. Supplying power to multiple USB devices from the connector could cause overheating and smoking.

Selecting a USB device mode
Press “MEDIA” button (1).
Each time the button is pressed, the mode will change as follows:

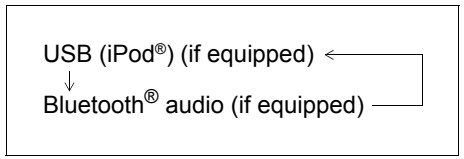

Selecting a folder
Turn “TUNE/FLD PUSH SOUND” knob (2) to select the desired folder.

Selecting a track
- Press UP button (3) to listen to the next track.
- Press DOWN button (4) twice to listen to the previous track.
  When DOWN button (4) is pressed once, the track currently being played will start from the beginning again.

Fast forwarding/rewinding a track
- Hold down UP button (3) to fast forward the track.
- Hold down DOWN button (4) to fast rewind the track.

Random playback
Press “RDM” button (6).
Each time the button is pressed, the mode will change as follows:

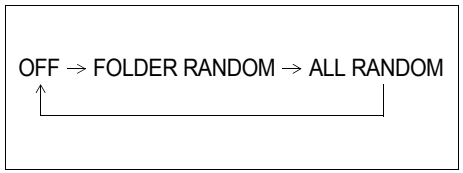

- FOLDER RANDOM
  The random indicator “F.RDM” will light.
  The tracks in the currently selected folder will be played in random order.
- ALL RANDOM
  The random indicator “RDM” will light.
  The tracks in the connected USB device will be played in random order.

Repeat playback
Press “RPT” button (5).
Each time the button is pressed, the mode will change as follows:

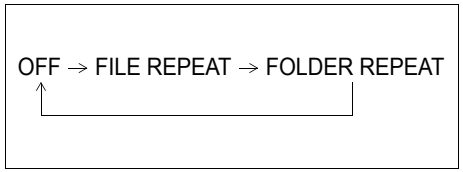

- FILE REPEAT
  The repeat indicator “RPT” will light.
  The track currently being played will be played repeatedly.
- FOLDER REPEAT
  The repeat indicator “F.RPT” will light.
  All the tracks in the folder currently selected will be played repeatedly.

Display change
Press “DISP” button (7).
Each time the button is pressed, display will change as follows:

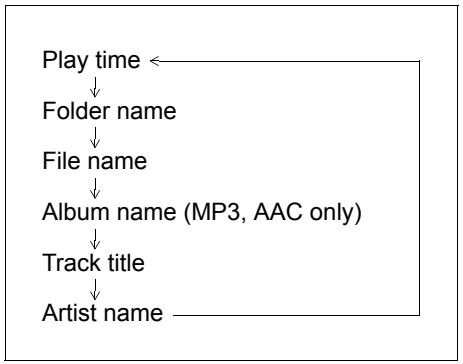

NOTE:
- *“NO TITLE” will be displayed when there is no text information in the disc currently being played.*
- *If text data contains more than 16 characters, “>” mark will appear at the right end. Holding down “DISP” button (7) for 1 second or longer can display the next page.*

Notes on USB device

Compatible USB devices

- USB mass storage class
  For details as to whether your USB memory/USB audio is compatible with USB mass storage class, please contact the USB memory/USB audio manufacturer.
- USB standard compatibility 1.1/2.0 full speed
- File system FAT12/16/32, VFAT
- Maximum current less than 1.0 A
- If devices such as USB hub, extension cable are connected to the audio system, it may not be recognized. In such case, connect the USB device directly to the audio system.
- Devices such as MP3 player/mobile phone/digital camera may not be recognized by the audio system for playing music.

USB device connection

- When connecting a USB device, check that the connector is pushed all the way into the port.
- Do not leave the USB device for long periods of time inside the vehicle where the temperature can rise too high.
- Back up any important data beforehand. We cannot accept responsibility for any lost data.
- It is recommended not to connect a USB device that contains data files other than MP3/WMA/AAC format.

Recording MP3/WMA/AAC files on a USB device

- Playback or display may not be possible depending on the type of USB device in use or the condition of the recording.
- Depending on the connected USB memory, the files may be played in different order from the stored one.

Compression formats

MP3

- Bit rate:
  MPEG1 Audio Layer III: 32 k - 320 kbps
  MPEG2 Audio Layer III: 8 k - 160 kbps
  MPEG2.5 Audio Layer III: 8 k - 160 kbps
- Sampling frequency:
  MPEG1 Audio Layer III: 32 k/44.1 k/48 kHz
  MPEG2 Audio Layer III: 16 k/22.05 k/24 kHz
  MPEG2.5 Audio Layer III: 8 k/11.025 k/12 kHz

WMA (Ver. 7, Ver. 8, Ver. 9*)

- Bit rate: CBR 32 k - 320 kbps
- Sampling frequency: 32 k/44.1 k/48 kHz

* WMA 9 Professional/LossLess/Voice are not supported.

AAC*

- Bit rate: ABR 16 k - 320 kbps
- Sampling frequency: 32 k/44.1 k/48 kHz

* Apple Lossless is not supported.

Maximum number of files/folders

- Maximum number of files: 2500
- Maximum number of files in a folder: 255
- Maximum depth of tree structure: 8
- Maximum number of folders: 255
  (Root folder is included.)

Listening to an iPod®

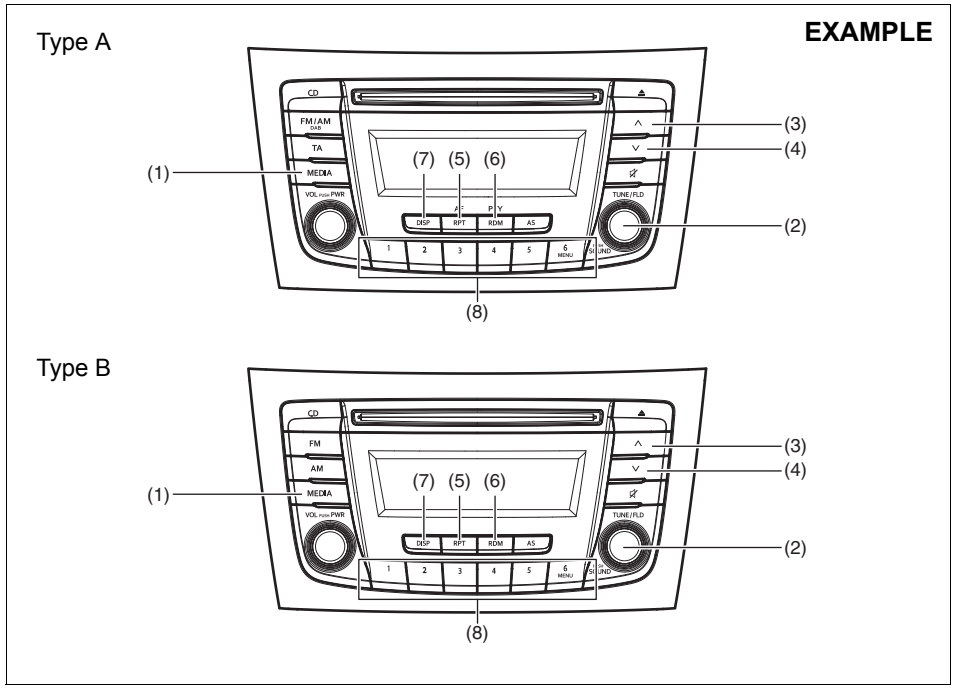

84MM00523

Display

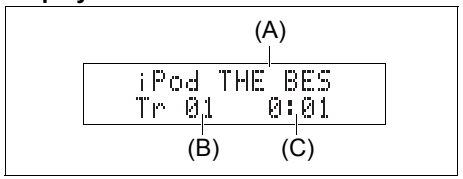

(1) “MEDIA” button
(2) “TUNE/FLD PUSH SOUND” knob
(3) UP button
(4) DOWN button
(5) “RPT” button
(6) “RDM” button
(7) “DISP” button
(8) PRESET buttons ([1] to [6])

(A) Track title
(B) Track number
(C) Play time

Selecting an iPod® mode
Press “MEDIA” button (1).
Each time the button is pressed, the mode will change as follows:

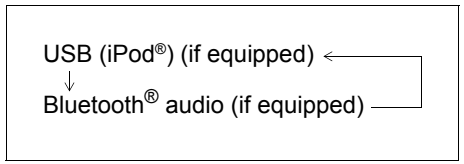

Selecting a track
- Press UP button (3) to listen to the next track.
- Press DOWN button (4) twice to listen to the previous track.
  When DOWN button (4) is pressed once, the track currently being played will start from the beginning again.

Fast forwarding/rewinding a track
- Hold down UP button (3) to fast forward the track.
- Hold down DOWN button (4) to fast rewind the track.

Random playback
Press “RDM” button (6).
Each time the button is pressed, the mode will change as follows:

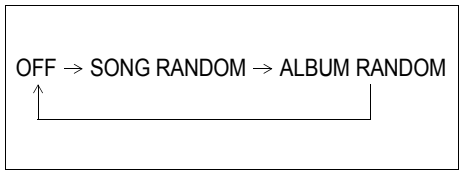

- SONG RANDOM
  The random indicator “RDM” will light.
  The tracks in the iPod® will be played in random order.
- ALBUM RANDOM
  The random indicator “F.RDM” will light.
  The albums in the iPod® will be played in random order.

Repeat playback
Press “RPT” button (5).
Each time the button is pressed, the mode will change as follows:

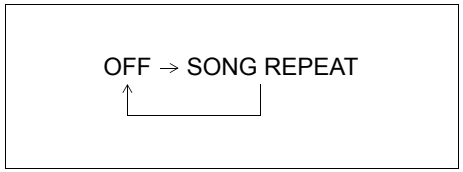

- SONG REPEAT
  The repeat indicator “RPT” will light.
  The track currently being played will be played repeatedly.

Display change
Press “DISP” button (7).
Each time the button is pressed, display will change as follows:

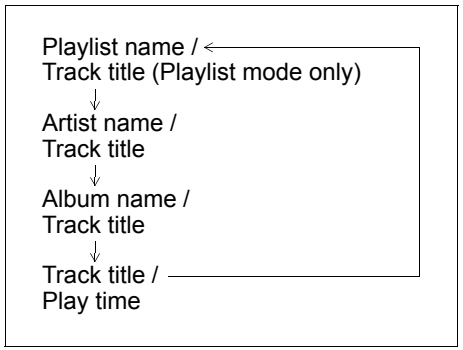

NOTE:
If text data contains more than 16 characters, “>” mark will appear at the right end. Holding down “DISP” button (7) for 1 second or longer can display the next page.

Playing mode selection

1) Press the button numbered [6] of PRE-SET buttons (8) for 1 second or longer.
2) Turn “TUNE/FLD PUSH SOUND” knob (2).
   Each time the knob is turned, the mode will change as follows:

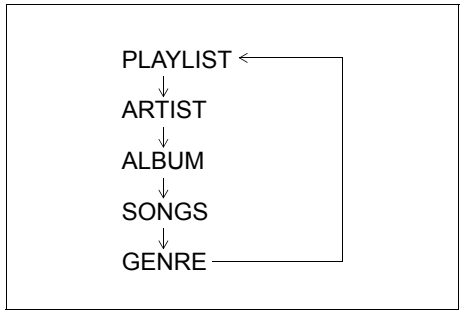

3) Press “TUNE/FLD PUSH SOUND” knob (2) to select the desired mode.

NOTE:

- *When the button numbered [6] of PRE-SET buttons (8) is pressed, the previous mode will be displayed.*

Notes on iPod®

Supported iPod®

- iPod® touch (5th generation)
- iPod® touch (4th generation)
- iPod® touch (3rd generation)
- iPod® touch (2nd generation)
- iPod® touch (1st generation)
- iPod® classic
- iPod® nano (7th generation)
- iPod® nano (6th generation)
- iPod® nano (5th generation)
- iPod® nano (4th generation)
- iPod® nano (3rd generation)
- iPod® nano (2nd generation)
- iPod® nano (1st generation)
- iPod® (5th generation)
- iPhone® 5
- iPhone® 4S
- iPhone® 4
- iPhone® 3GS
- iPhone® 3G
- iPhone®

* Some functions may not be available depending on the model of iPod®.

* iPod® is a trademark of Apple Inc., registered in the U.S. and other countries.

* iPhone® is a trademark of Apple Inc., registered in the U.S. and other countries.

* Apple is not responsible for the operation of this device or its compliance with safety and regulatory standards.

iPod® connection

- Make sure to detach the iPod® after turning the ignition switch to “LOCK” position or pressing the engine switch to change the ignition mode to “LOCK” (OFF). The iPod® may not be shut down when it is being connected and may result in battery depletion.
- Do not connect iPod® accessories such as an iPod® remote control or headphones while connecting the iPod® with the unit. The unit may not operate correctly.

Bluetooth® hands-free (if equipped)

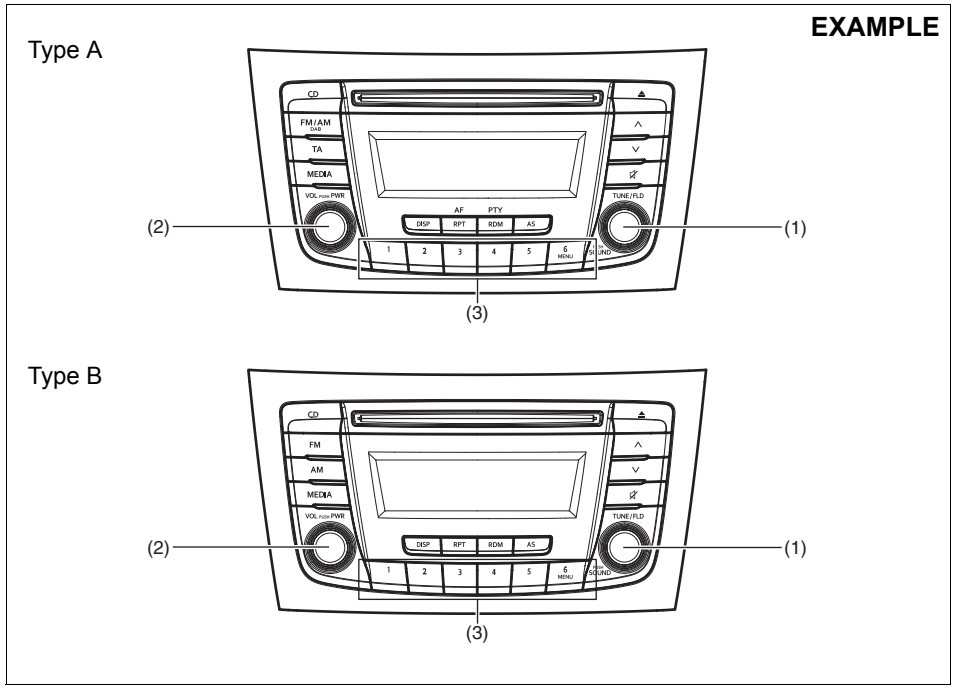

84MM20501

(1) “TUNE/FLD PUSH SOUND” knob
(2) “VOL PUSH PWR” knob
(3) PRESET buttons

Steering switch

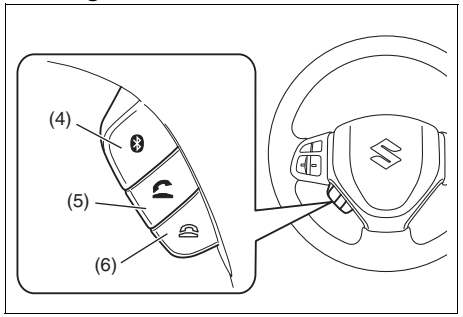

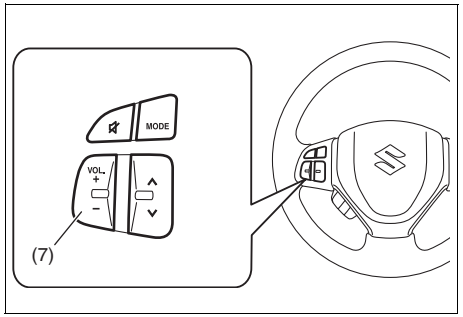

(4) Bluetooth® setup button
(5) OFF HOOK button
(6) ON HOOK button
(7) “VOL” switch

Phone registration

To use the hands-free function with this unit, it is required to register the phone in advance.

NOTE:
- *Up to 5 phones can be registered.*
- *To set up a new phone, disconnect the audio player from the unit. Connect the audio player again after phone setup is completed if necessary.*
- *When attempts to establish the pairing fail within 120 seconds, the connecting operation will be canceled. Try to establish the pairing again or refer to the manual of the phone in use for how to establish the pairing with the phone.*

1) Press the Bluetooth® setup button (4).
   The Bluetooth® setup menu will be displayed.
2) Turn "TUNE/FLD PUSH SOUND" knob (1) to select "Setup Bluetooth", and press the knob (1) to determine the selection.
3) Turn "TUNE/FLD PUSH SOUND" knob (1) to select "Pairing", and press the knob (1) to determine the selection.
4) Select "CAR AUDIO" from the Bluetooth® menu of the phone and establish the pairing.
   Refer to the manual of the phone in use for further information.
5) Enter the passkey displayed on the unit to the phone.
6) Press ON HOOK button (6).

NOTE:
- *When selecting "Go Back", the previous menu will be displayed.*
- *When registering an additional phone, repeat Step from 1).*

Receiving a call
Press OFF HOOK button (5) to receive a call.

Ending a call
Press ON HOOK button (6) to end a call.

Rejecting a call (only for supported models)
Press ON HOOK button (6) to reject a incoming call.

Adjusting the listening volume
- Turn "VOL PUSH PWR" knob (2) during a call.
  Turning it clockwise increases the volume; turning it counterclockwise decreases the volume.
- Press "VOL" switch (7) during a call. Pressing "+" of the switch increases the volume; pressing "-" of the switch decreases the volume.

Adjusting the ring volume
- Turn "VOL PUSH PWR" knob (2) while a call is coming in.
  Turning it clockwise increases the volume; turning it counterclockwise decreases the volume.
- Press "VOL" switch (7) during a call. Pressing "+" of the switch increases the volume; pressing "-" of the switch decreases the volume.

Adjusting the call or ringtone volume
Follow the instructions below to adjust the call or ringtone volume.
1) Press the Bluetooth® setup button (4).
   The Bluetooth® setup menu will be displayed.
2) Turn "TUNE/FLD PUSH SOUND" knob (1) to select "Setup Telephone", and press the knob (1) to determine the selection.
3) Turn "TUNE/FLD PUSH SOUND" knob (1) to select "Sound Setting", and press the knob (1) to determine the selection.
4) Turn "TUNE/FLD PUSH SOUND" knob (1) to select "Call Volume" or "Ringtone Volume", and press the knob (1) to determine the selection.
   The current call or ringtone volume will be displayed.
5) Turn "TUNE/FLD PUSH SOUND" knob (1) to select the desired call or ringtone volume, and press the knob (1) to determine the selection.

NOTE:
When selecting "Go Back", the previous menu will be displayed.

Selecting the ringtone
Follow the instructions below to select a ringtone.
1) Press the Bluetooth® setup button (4).
   The Bluetooth® setup menu will be displayed.
2) Turn "TUNE/FLD PUSH SOUND" knob (1) to select "Setup Telephone", and press the knob (1) to determine the selection.
3) Turn "TUNE/FLD PUSH SOUND" knob (1) to select "Sound Setting", and press the knob (1) to determine the selection.
4) Turn "TUNE/FLD PUSH SOUND" knob (1) to select "Ringtone", and press the knob (1) to determine the selection.
   The current ringtone will be sounded.
5) Turn "TUNE/FLD PUSH SOUND" knob (1) to select the desired ringtone, and press the knob (1) to determine the selection.

NOTE:
When selecting "Go Back", the previous menu will be displayed.

Dialing using missed/incoming/ outgoing calls
Follow the instructions below to dial to the previously dialed number again.

NOTE:
Up to 10 previously dialed phone numbers can be stored. (10 each for dialed, received and missed call)

1) Press OFF HOOK button (5).
   The Bluetooth® phonebook menu will be displayed.
2) Turn "TUNE/FLD PUSH SOUND" knob (1) to select "Missed Calls", "Incoming Calls" or "Outgoing Calls", and press the knob (1) to determine the selection.
   To dial from the dialed history or the received history, select "Missed Calls", "Incoming Calls" or "Outgoing Calls" respectively.
3) Turn "TUNE/FLD PUSH SOUND" knob (1) to select the desired number, and press the knob (1) to determine the selection.
4) Turn "TUNE/FLD PUSH SOUND" knob (1) to select "Dial", and press the knob (1) or OFF HOOK button (5) to dial to the selected number.

NOTE:
- *When selecting "Go Back", the previous menu will be displayed.*
- *Pressing "Confirm" after selecting "Add Speed Dial" can register the selected number in the speed dial.*
- *Pressing "Confirm" after selecting "Delete" can delete the selected number from the call history.*

Deletion of call history
Follow the instructions below to delete a missed/incoming/outgoing call history.
1) Press OFF HOOK button (5).
   The Bluetooth® phonebook menu will be displayed.
2) Turn "TUNE/FLD PUSH SOUND" knob (1) to select "Setup Phonebook", and press the knob (1) to determine the selection.
3) Turn "TUNE/FLD PUSH SOUND" knob (1) to select "Delete History", and press the knob (1) to determine the selection.
4) Turn "TUNE/FLD PUSH SOUND" knob (1) to select "Missed Calls", "Incoming Calls", or "Outgoing Calls", and press the knob (1) to determine the selection.
5) Turn "TUNE/FLD PUSH SOUND" knob (1) to select a number to be deleted or "ALL", and press the knob (1) to determine the selection.
6) Turn "TUNE/FLD PUSH SOUND" knob (1) to select "Delete?" or "Delete All?", and press the knob (1) to determine the selection.

7) Turn “TUNE/FLD PUSH SOUND” knob (1) to select “Confirm”, and press the knob (1) to complete the deletion.

NOTE:
When selecting “Go Back”, the previous menu will be displayed.

Registration in Phonebook
Follow the instructions below to register phone numbers in the Phonebook of the unit.
1) Press the Bluetooth® setup button (4).
   The Bluetooth® setup menu will be displayed.
2) Turn “TUNE/FLD PUSH SOUND” knob (1) to select “Setup Telephone”, and press the knob (1) to determine the selection.
3) Turn “TUNE/FLD PUSH SOUND” knob (1) to select “Setup Phonebook”, and press the knob (1) to determine the selection.
4) Turn “TUNE/FLD PUSH SOUND” knob (1) to select “Add Contacts”, and press the knob (1) to determine the selection.
5) Turn “TUNE/FLD PUSH SOUND” knob (1) to select “Overwrite All” or “Add One Contact”, and press the knob (1) to determine the selection.
   The “Rest of Memory XXXX: Ok?” will be displayed.
6) Press or turn “TUNE/FLD PUSH SOUND” knob (1) to select “Confirm”, and press the knob (1) to determine the selection.
7) Transfer contacts from the phone.
   When the registration is completed, the “Setup Phonebook” will be displayed.

NOTE:
- *When selecting “Go Back”, the previous menu will be displayed.*
- *Up to 1000 numbers can be registered in Phonebook.*

Transfer of call history (Call History)
Follow the instructions below to transfer call history of the registered phone.
1) Press the Bluetooth® setup button (4).
   The Bluetooth® setup menu will be displayed.
2) Turn “TUNE/FLD PUSH SOUND” knob (1) to select “Setup Telephone”, and press the knob (1) to determine the selection.
3) Turn “TUNE/FLD PUSH SOUND” knob (1) to select “Call History”, and press the knob (1) to determine the selection.
4) Turn “TUNE/FLD PUSH SOUND” knob (1) to select “Call History?”, and press the knob (1) to determine the selection.
5) Turn “TUNE/FLD PUSH SOUND” knob (1) to select “Confirm”, and press the knob (1) to transfer the call history from the phone.

NOTE:
When selecting “Go Back”, the previous menu will be displayed.

Making a call by phonebook
Follow the instructions below to dial a number registered in phonebook.
1) Press OFF HOOK button (5).
   The Bluetooth® phonebook menu will be displayed.
2) Turn “TUNE/FLD PUSH SOUND” knob (1) to select “Phonebook”, and press the knob (1) to determine the selection.
3) Turn “TUNE/FLD PUSH SOUND” knob (1) to select the initial of the name you would like to make a call, and press the knob (1) to determine the selection.
   The registered numbers will be displayed in sequence. If names have been registered together with numbers, the names will be displayed.
4) Turn “TUNE/FLD PUSH SOUND” knob (1) to select “Dial”, and press the knob (1) to determine the selection.
5) Press OFF HOOK button (5).
   The displayed number or the number registered with the displayed name will be dialed.

Deletion of registered data (Delete Entry)

Follow the instructions below to delete a number registered in phonebook.

1) Press the Bluetooth® setup button (4). The Bluetooth® setup menu will be displayed.
2) Turn “TUNE/FLD PUSH SOUND” knob (1) to select “Setup Telephone”, and press the knob (1) to determine the selection.
3) Turn “TUNE/FLD PUSH SOUND” knob (1) to select “Setup Phonebook”, and press the knob (1) to determine the selection.
4) Turn “TUNE/FLD PUSH SOUND” knob (1) to select “Delete Contacts”, and press the knob (1) to determine the selection.
5) Turn “TUNE/FLD PUSH SOUND” knob (1) to select a number to be deleted, and press the knob (1) to determine the selection.
6) Turn “TUNE/FLD PUSH SOUND” knob (1) to select “Delete?”, and press the knob (1) to determine the selection.
7) Turn “TUNE/FLD PUSH SOUND” knob (1) to select “Confirm”, and press the knob (1) to complete the deletion.

NOTE:
When selecting “Go Back”, the previous menu will be displayed.

Registration in speed dial

Follow the instructions below to assign a number to one of PRESET buttons (3) to use as the speed dial.

1) Press the Bluetooth® setup button (4). The Bluetooth® setup menu will be displayed.
2) Turn “TUNE/FLD PUSH SOUND” knob (1) to select “Setup Telephone”, and press the knob (1) to determine the selection.
3) Turn “TUNE/FLD PUSH SOUND” knob (1) to select “Setup Phonebook”, and press the knob (1) to determine the selection.
4) Turn “TUNE/FLD PUSH SOUND” knob (1) to select “Add Speed Dial”, and press the knob (1) to determine the selection.
5) Turn “TUNE/FLD PUSH SOUND” knob (1) to select a number to be assigned, and press the knob (1) to determine the selection.
6) Turn “TUNE/FLD PUSH SOUND” knob (1) to select “Choose Preset”, and press the knob (1) to determine the selection.
7) Press one of PRESET buttons (3) to which the selected number is to be assigned. If a number is already assigned to the selected button, a confirmation message will be displayed. Turn “TUNE/FLD PUSH SOUND” knob (1) to select “Confirm”, and press the knob (1) to complete the assignment. When the assignment is completed, the “Setup Phonebook” will be displayed.

NOTE:
When selecting “Go Back”, the previous menu will be displayed.

One-touch call (Speed dial)

Follow the instructions below to dial the number assigned to each of PRESET buttons (3).

1) Press OFF HOOK button (5). The Bluetooth® phonebook menu will be displayed.
2) Turn “TUNE/FLD PUSH SOUND” knob (1) to select “Speed Dials”, and press the knob (1) to determine the selection.
3) Press one of PRESET buttons (3). If no number is assigned, “No Entry” is displayed.
4) Press OFF HOOK button (5). The selected number will be dialed.

Deletion of speed dial (Del Speed Dial)
Follow the instructions below to delete the number assigned for the speed dial.
1) Press OFF HOOK button (5).
   The Bluetooth® phonebook menu will be displayed.
2) Turn “TUNE/FLD PUSH SOUND” knob (1) to select “Speed Dials”, and press the knob (1) to determine the selection.
3) Press one of PRESET buttons (3) to which the number to be deleted is assigned.
   If the number is not registered, “No Entry” is displayed.
4) Turn “TUNE/FLD PUSH SOUND” knob (1) to select “Delete”, and press the knob (1) to determine the selection.
5) Turn “TUNE/FLD PUSH SOUND” knob (1) to select “Del Speed Dial”, and press the knob (1) to determine the selection.
6) Turn “TUNE/FLD PUSH SOUND” knob (1) to select “Confirm”, and press the knob (1) to complete the deletion.

NOTE:
When selecting “Go Back”, the previous menu will be displayed.

Display of device data (Device Name)
Follow the instructions below to display the BD (Bluetooth® Device) address and device name.
1) Press the Bluetooth® setup button (4).
   The Bluetooth® setup menu will be displayed.
2) Turn “TUNE/FLD PUSH SOUND” knob (1) to select “Setup Bluetooth”, and press the knob (1) to determine the selection.
3) Turn “TUNE/FLD PUSH SOUND” knob (1) to select “Bluetooth Info”, and press the knob (1) to determine the selection.
4) Turn “TUNE/FLD PUSH SOUND” knob (1) to select “Device Name” or “Device Address”, and press the knob (1) to display the device name or the BD (Bluetooth® Device) address.

NOTE:
When selecting “Go Back”, the previous menu will be displayed.

Reset to the factory defaults
Follow the instructions below to reset all the settings to the factory defaults.
1) Press the Bluetooth® setup button (4).
   The Bluetooth® setup menu will be displayed.
2) Turn “TUNE/FLD PUSH SOUND” knob (1) to select “Setup Bluetooth”, and press the knob (1) to determine the selection.
3) Turn “TUNE/FLD PUSH SOUND” knob (1) to select “Initialize”, and press the knob (1) to determine the selection.
4) Turn “TUNE/FLD PUSH SOUND” knob (1) to select “All Initialize”, and press the knob (1) to determine the selection.
5) Turn “TUNE/FLD PUSH SOUND” knob (1) to select “Confirm”, and press the knob (1) to start the reset.

NOTE:
When selecting “Go Back”, the previous menu will be displayed.

Selection of phone (Select Phone)
Follow the instructions below to select a phone to be paired with from the registered phones.
1) Press the Bluetooth® setup button (4). The Bluetooth® setup menu will be displayed.
2) Turn “TUNE/FLD PUSH SOUND” knob (1) to select “Setup Bluetooth”, and press the knob (1) to determine the selection.
3) Turn “TUNE/FLD PUSH SOUND” knob (1) to select “List Phone”, and press the knob (1) to determine the selection.
4) Turn “TUNE/FLD PUSH SOUND” knob (1) to select a phone to be paired with, and press the knob (1) to determine the selection.
5) Turn “TUNE/FLD PUSH SOUND” knob (1) to select “Select”, and press the knob (1) to determine the selection.

NOTE:
- *When selecting “Go Back”, the previous menu will be displayed.*
- *The Bluetooth® ready audio device will be disconnected when the phone is selected.*

List of phones (List Phones)
Follow the instructions below to display the names of the registered phones in sequence.
1) Press the Bluetooth® setup button (4). The Bluetooth® setup menu will be displayed.
2) Turn “TUNE/FLD PUSH SOUND” knob (1) to select “Setup Bluetooth”, and press the knob (1) to determine the selection.
3) Turn “TUNE/FLD PUSH SOUND” knob (1) to select “List Phone”, and press the knob (1) to determine the selection. The names of the registered phones are displayed in sequence.

NOTE:
When selecting “Go Back”, the previous menu will be displayed.

Passkey setting (Set Passkey)
Follow the instructions below to set the security number (passkey).
1) Press the Bluetooth® setup button (4). The Bluetooth® setup menu will be displayed.
2) Turn “TUNE/FLD PUSH SOUND” knob (1) to select “Setup Bluetooth”, and press the knob (1) to determine the selection.
3) Turn “TUNE/FLD PUSH SOUND” knob (1) to select “Passkey”, and press the knob (1) to determine the selection.
4) Turn “TUNE/FLD PUSH SOUND” knob (1) to select “New Passkey”, and press the knob (1) to determine the selection.
5) Press or turn “TUNE/FLD PUSH SOUND” knob (1) to select “Confirm”.
6) Turn “TUNE/FLD PUSH SOUND” knob (1) to select a number for the first digit, and press the knob (1) to determine the selection. Select and determine numbers for the second, third and fourth digits in order in the same manner. When not entering up to the eighth digit, enter blanks for the successive digits.
7) Turn “TUNE/FLD PUSH SOUND” knob (1) to determine the passkey setting.

NOTE:
When selecting “Go Back”, the previous menu will be displayed.

Deletion of phone information (Delete Phone)

Follow the instructions below to delete the registered phone information.

1) Press the Bluetooth® setup button (4). The Bluetooth® setup menu will be displayed.
2) Turn “TUNE/FLD PUSH SOUND” knob (1) to select “Setup Bluetooth”, and press the knob (1) to determine the selection.
3) Turn “TUNE/FLD PUSH SOUND” knob (1) to select “List Phone”, and press the knob (1) to determine the selection.
4) Turn “TUNE/FLD PUSH SOUND” knob (1) to select a phone to be deleted, and press the knob (1) to determine the selection.
5) Turn “TUNE/FLD PUSH SOUND” knob (1) to select “Delete Phone”, and press the knob (1) to determine the selection.
6) Turn “TUNE/FLD PUSH SOUND” knob (1) to select “Delete?”, and press the knob (1) to determine the selection.
7) Turn “TUNE/FLD PUSH SOUND” knob (1) to select “Confirm”, and press the knob (1) to determine the selection.

NOTE:
When selecting “Go Back”, the previous menu will be displayed.

BT function on/off (BT Power)

Follow the instructions below to turn on/off the Bluetooth® function.

1) Press the Bluetooth® setup button (4). The Bluetooth® setup menu will be displayed.
2) Turn “TUNE/FLD PUSH SOUND” knob (1) to select “Setup Bluetooth”, and press the knob (1) to determine the selection.
3) Turn “TUNE/FLD PUSH SOUND” knob (1) to select “BT Power”, and press the knob (1) to determine the selection.
4) Press “TUNE/FLD PUSH SOUND” knob (1) to select “BT Power On” or “BT Power Off”.

NOTE:
- *When the BT function is turned off, the connection between this unit and the registered phone in use will be disconnected.*
- *When selecting “Go Back”, the previous menu will be displayed.*

Bluetooth® audio (if equipped)

EXAM-

Type A

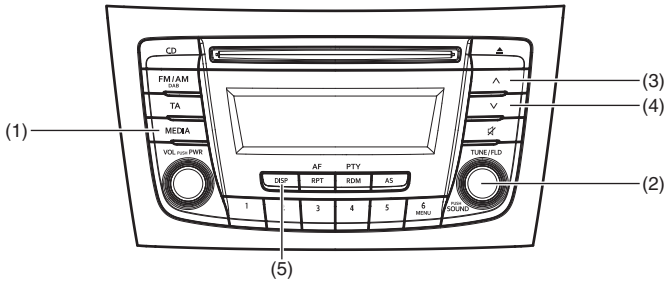

Type B

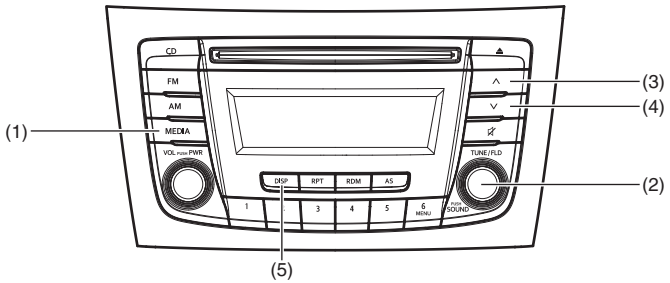

84MM20502

Steering switch

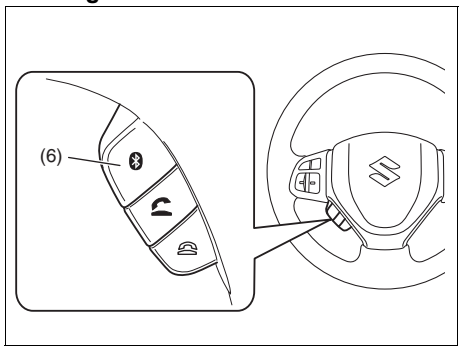

Display

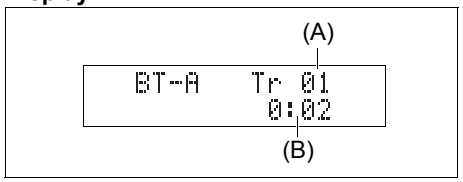

(1) “MEDIA” button
(2) “TUNE/FLD PUSH SOUND” knob
(3) UP button
(4) DOWN button
(5) “DISP” button
(6) Bluetooth® setup button

(A) Track number
(B) Play time

Registration of audio devices

To use Bluetooth® ready audio devices with this unit, it is required to register the devices.

NOTE:
- *To set up a new audio player, disconnect the phone from the unit. Connect the phone after audio player setup is completed if necessary.*
- *When attempts to establish the pairing fail within 120 seconds, the connecting operation will be canceled. Try to establish the pairing again or refer to the audio player manual for assistance with the pairing process.*

1) Press the Bluetooth® setup button (6).
   The Bluetooth® setup menu will be displayed.
2) Turn "TUNE/FLD PUSH SOUND" knob (2) to select "Setup Bluetooth", and press the knob (2) to determine the selection.
3) Turn "TUNE/FLD PUSH SOUND" knob (2) to select "Pairing", and press the knob (2) to determine the selection.
4) Select "CAR AUDIO" from the Bluetooth® menu of the audio player and establish the pairing.
   Refer to the manual of the audio player in use for further information.
5) Enter the passkey displayed on the unit to the audio player.

NOTE:
- *When selecting "Go Back", the previous menu will be displayed.*
- *When registering additional audio devices, repeat Step from 1).*

Selecting the Bluetooth® audio mode
Press "MEDIA" button (1).
Each time the button is pressed, the mode will change as follows:

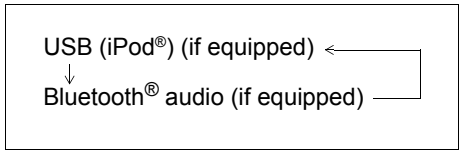

Selecting a group (only for supported models)
Turn "TUNE/FLD PUSH SOUND" knob (2) to select a group.

Selecting a track
- *Press UP button (3) to listen to the next track.*
- *Press DOWN button (4) twice to listen to the previous track.*
  When DOWN button (4) is pressed once, the track currently being played will start from the beginning again.

Fast forwarding/rewinding a track
- Hold down UP button (3) to fast forward the track.
- Hold down DOWN button (4) to fast rewind the track.

NOTE:
Some functions may not be available depending on Bluetooth® audio.

Display change
Press "DISP" button (5).
Each time the button is pressed, display will change as follows:

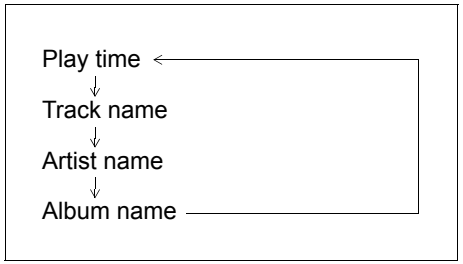

NOTE:
If text data contains more than 16 characters, ">" mark will appear at the right end. Holding down "DISP" button (5) for 1 second or longer can display the next page.

Selection of audio device (Select Audio)
Follow the instructions below to select an audio device to be paired with from the registered audio devices.
1) Press the Bluetooth® setup button (6). The Bluetooth® setup menu will be displayed.
2) Turn “TUNE/FLD PUSH SOUND” knob (2) to select “Setup Bluetooth”, and press the knob (2) to determine the selection.
3) Turn “TUNE/FLD PUSH SOUND” knob (2) to select “List Audio”, and press the knob (2) to determine the selection.
4) Turn “TUNE/FLD PUSH SOUND” knob (2) to select an audio device to be used, and press the knob (2) to determine the selection.
5) Turn “TUNE/FLD PUSH SOUND” knob (2) to select “Select”, and press the knob (2) to determine the selection.
6) Turn “TUNE/FLD PUSH SOUND” knob (2) to select “Confirm”, and press the knob (2) to complete the pairing.

NOTE:
- *When selecting “Go Back”, the previous menu will be displayed.*
- *The phone will be disconnected when the Bluetooth® ready audio device is selected.*

List of audio devices (List Audio)
Follow the instructions below to display the names of the registered audio devices in sequence.
1) Press the Bluetooth® setup button (6). The Bluetooth® setup menu will be displayed.
2) Turn “TUNE/FLD PUSH SOUND” knob (2) to select “Setup Bluetooth”, and press the knob (2) to determine the selection.
3) Turn “TUNE/FLD PUSH SOUND” knob (2) to select “List Audio”, and press the knob (2) to determine the selection. The names of registered audio devices will be displayed in sequence.

NOTE:
When selecting “Go Back”, the previous menu will be displayed.

Passkey setting (Set Passkey)
Follow the instructions below to set the security number (Passkey).
1) Press the Bluetooth® setup button (6). The Bluetooth® setup menu will be displayed.
2) Turn “TUNE/FLD PUSH SOUND” knob (2) to select “Setup Bluetooth”, and press the knob (2) to determine the selection.
3) Turn “TUNE/FLD PUSH SOUND” knob (2) to select “Passkey”, and press the knob (2) to determine the selection.
4) Turn “TUNE/FLD PUSH SOUND” knob (2) to select “New Passkey”, and press the knob (2) to determine the selection.
5) Press or turn “TUNE/FLD PUSH SOUND” knob (2) to select “Confirm”.
6) Turn “TUNE/FLD PUSH SOUND” knob (2) to select a number for the first digit, and press the knob (2) to determine the selection. Select and determine numbers for the second, third and fourth digits in order in the same manner. When not entering up to the eighth digit, enter blanks for the successive digits.
7) Turn “TUNE/FLD PUSH SOUND” knob (2) to determine the passkey setting.

NOTE:
When selecting “Go Back”, the previous menu will be displayed.

Deletion of audio device information (Delete Audio)

Follow the instructions below to delete the registered audio device information.

1) Press the Bluetooth® setup button (6). The Bluetooth® setup menu will be displayed.
2) Turn “TUNE/FLD PUSH SOUND” knob (2) to select “Setup Bluetooth”, and press the knob (2) to determine the selection.
3) Turn “TUNE/FLD PUSH SOUND” knob (2) to select “List Audio”, and press the knob (2) to determine the selection.
4) Turn “TUNE/FLD PUSH SOUND” knob (2) to select an audio device to be deleted, and press the knob (2) to determine the selection.
5) Turn “TUNE/FLD PUSH SOUND” knob (2) to select “Delete”, and press the knob (2) to determine the selection.
6) Turn “TUNE/FLD PUSH SOUND” knob (2) to select “Delete?”, and press the knob (2) to determine the selection.
7) Turn “TUNE/FLD PUSH SOUND” knob (2) to select “Confirm”, and press the knob (2) to complete the deletion.

NOTE:
When selecting “Go Back”, the previous menu will be displayed.

Disclaimer for Bluetooth® function

- Depending on compatibility of mobile phone models, no Bluetooth® function can be used, or some Bluetooth® functions may be restricted.
- Connectivity or voice quality may get affected depending on circumstances.
- After the ignition switch is turned to “ON” position or the engine switch is pressed to change the ignition mode to “ON”, the audio system takes few seconds to detect and connect to the Bluetooth® device (if already paired).

Remote audio controls (if equipped)

Controlling basic functions of the audio system is available using the switches on the steering wheel.

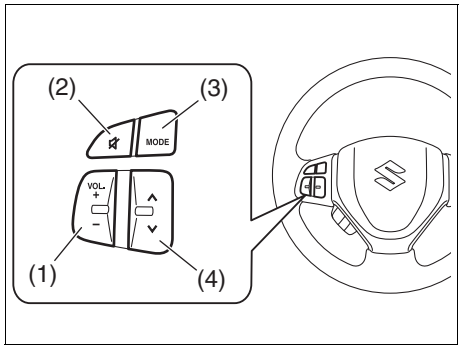

Adjusting the volume

- To increase the volume, hold down "+" of "VOL" switch (1). The volume will continue to increase until the switch is released.
- To decrease the volume, hold down "-" of "VOL" switch (1). The volume will continue to decrease until the switch is released.
- To mute the sound, press the switch (2).

Selecting the mode

Press the switch (3).
Each time the button is pressed, the mode will change as follows:

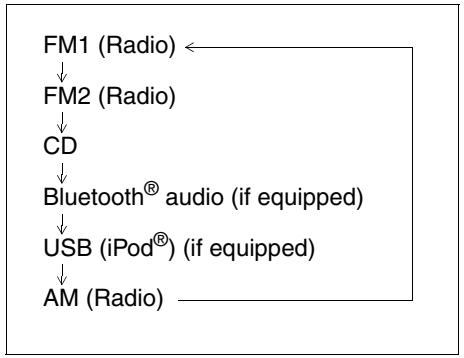

It is possible to turn on the audio system by pressing the switch (3).

Selecting the radio station (FM1, FM2, AM mode)

- To select the next preset station, press "∧" of the switch (4) only for a moment.
- To select the previous preset station, press "∨" of the switch (4) only for a moment.
- To scan a higher frequency radio station, press "∧" of the switch (4) for 1 second or longer.
- To scan a lower frequency radio station, press "∨" of the switch (4) for 1 second or longer.

Selecting the track (CD, USB (iPod®), Bluetooth® audio mode)

- To skip to the next track, press "∧" of the switch (4) only for a moment.
- To skip to the previous track, press "∨" of the switch (4) twice only for a moment. When the switch (4) is pushed down once only for a moment, the track currently being played will start from the beginning again.

Fast forwarding/rewinding a track

- To fast forward a track, press "∧" of the switch (4) for 1 second or longer.
- To fast rewind a track, press "∨" of the switch (4) for 1 second or longer.

Anti-theft feature

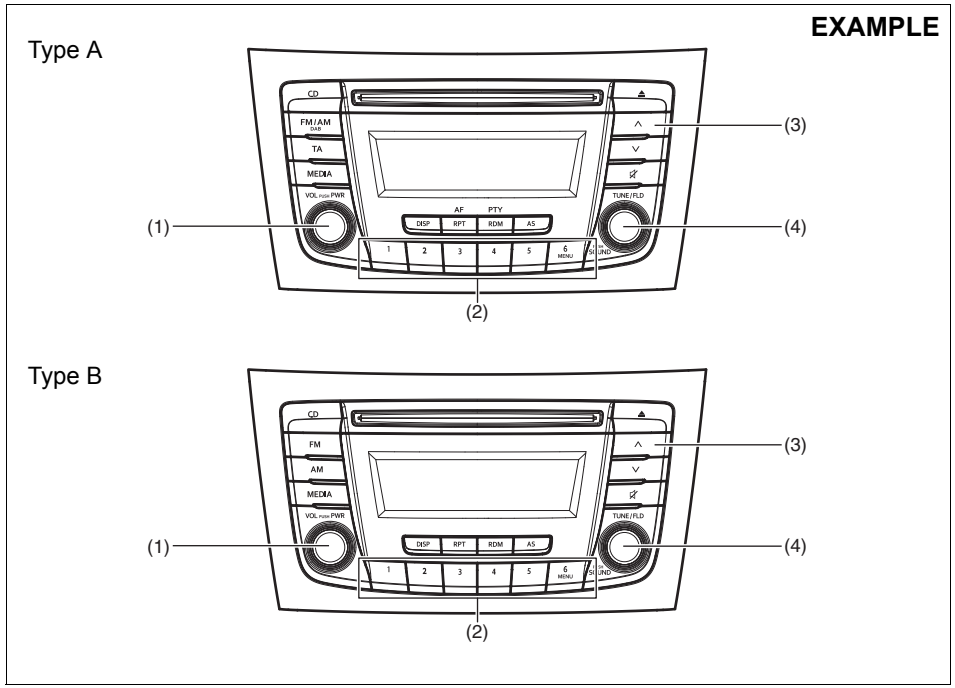

84MM00526

(1) “VOL PUSH PWR” knob
(2) PRESET buttons ([1] to [6])
(3) UP button
(4) “TUNE/FLD PUSH SOUND” knob

The anti-theft function is intended to discourage thefts. For example, when the audio system is installed in another vehicle, it will become unable to operate.
This function works by entering a Personal Identification Number (PIN).
When the unit is disconnected from its power source, such as when the audio system is removed or the battery is disconnected, the unit will become inoperable until the PIN is reentered.

Setting the anti-theft function

1) Press “VOL PUSH PWR” knob (1) to power off.
2) Hold down the buttons numbered [1] and [6] of PRESET buttons (2) and press “VOL PUSH PWR” knob (1).
   “SECURITY” will be displayed.
3) Press UP button (3) and the button numbered [1] of PRESET buttons (2) simultaneously.
4) Enter a 4-digit number to be registered as PIN using the buttons numbered [1] - [4] of PRESET buttons (2).
5) Hold down “TUNE/FLD PUSH SOUND” knob (4) for 1 second or longer to set the anti-theft function.

NOTE:
Take a note of the registered PIN and keep it for the future use.

Canceling the anti-theft feature

To cancel the anti-theft function, delete the registered PIN.

1) Press “VOL PUSH PWR” knob (1) to power off.
2) Hold down the buttons numbered [1] and [6] of PRESET buttons (2) and press “VOL PUSH PWR” knob (1).
   “PIN ENTRY” will be displayed.
3) Press UP button (3) and the button numbered [1] of PRESET buttons (2) simultaneously.
4) Enter a 4-digit number to be registered as PIN using the buttons numbered [1] - [4] of PRESET buttons (2).
5) Hold down “TUNE/FLD PUSH SOUND” knob (4) for 1 second or longer to delete the registered PIN. The indication “----” will be displayed and the anti-theft function will be canceled.

NOTE:
To change your PIN, first delete your current PIN, and then set a new one.

Confirming the Personal Identification Number (PIN)

When the main power source is disconnected such as when the battery is replaced, etc, it is required to enter the PIN to operate the unit again.

1) Set the ignition switch to “ACC” position or the ignition mode to “ON”.
   “SECURITY” will be displayed.
2) Press UP button (3) and the button numbered [1] of PRESET buttons (2) simultaneously.
3) Enter a 4-digit number to be registered as PIN using the buttons numbered [1] - [4] of PRESET buttons (2).
4) Hold down “TUNE/FLD PUSH SOUND” knob (4) for 1 second or longer.
   When the same PIN as registered is entered, the power of the audio system will be turned off automatically and it will become operable again.

NOTE:
If an incorrect PIN is entered, “ERROR” and the total number of incorrect entry attempts will be displayed.
If an incorrect PIN is entered 10 times or more, “HELP” will be displayed and the audio system will become inoperable.

Troubleshooting

When encountering a problem, check and follow the instructions below.
If the described suggestions do not solve the problem, it is recommended to take the unit to your authorized SUZUKI dealer.

Problem	Possible cause	Possible solution
Common		
Unable to operate	The security function is on.	When “SECURITY” is displayed, enter the ID. When “HELP” is displayed, contact your authorized SUZUKI dealer.
Unable to turn on the power (No sound is produced)	Fuse is blown.	Contact your authorized SUZUKI dealer.
Radio		
Much noise	It may not be exactly tuned in to the station.	Tune it in exactly to the station.
Unable to receive by auto tuning	There may be no station emitting signals powerful enough.	Pick up a station by manual tuning.
	If AF is on, the unit searches for RDS stations only.	Turn off AF.
CD		
Sound skips or noise produced	The disc is dirty.	Wipe the disc with a soft cloth.
	The disc has a major scratch or is warped.	Replace the disc with the one which has no scratch and warp.

Problem	Possible cause	Possible solution
MP3/WMA/AAC		
No playback	The disc contains unsupported formatted data.	Check the file format.
Sound skips or noise produced	Sound skipping may occur when playing VBR (Variable Bit Rate) files.	It is not recommended to play VBR files.
USB		
Playback does not start when the USB device is connected	There is no supported format file to play on this unit.	Check the file format.
	The current consumption of the USB device exceeds 1.0 A.	Use a USB device with a current consumption lower than 1.0 A.
Bluetooth®		
Pairing failed	The distance between this unit and the Bluetooth® ready device is too far, or a metallic object may be located between the Bluetooth® ready device and this unit.	Change the location of the Bluetooth® ready device.
	The Bluetooth® function of the Bluetooth® ready device is off.	Refer to the manual of the Bluetooth® ready device. (Some devices have the power saving function that automatically activates after a certain time.)
Unable to receive a call	Your current location may be out of service area.	Drive your vehicle to the service area of the phone.
The voice quality of hands-free is low (Distortion, noise etc.)	Another wireless device may be located near the unit.	Switch off the wireless device or keep it away from the unit.

Error display messages

Display	Possible cause	Possible solution
CD		
“ERROR 1”	The disc cannot be read.	Insert the disc with its label side up. Check the disc if it is not warped or is free of flaws. When “ERROR 1” does not disappear even when a normal disc is inserted, contact your dealer.
“ERROR 3”	The player developed an error of an unidentified cause.	When the CD is in the unit, press the CD eject button to remove the disc. When the disc cannot be ejected, contact your dealer.
USB/iPod®		
“ERROR 1”	The USB device is disconnected.	Check the connection of the USB device.
“ERROR 2”	Impossible to communicate correctly with the USB device.	Unplug the USB device and plug it again. Check the USB device.
“ERROR 3”	Inoperable due to an unidentified cause.	Unplug the USB device and plug it again. When “ERROR 3” does not disappear, contact your dealer.
“ERROR 4”	The current consumption of the USB device exceeds 1.0 A.	Check the USB device.

Display	Possible cause	Possible solution

Bluetooth®

“ERROR 1”	The player developed an error of an unidentified cause.	Disconnect the Bluetooth® ready device and connect it again. When “ERROR 1” does not disappear, contact your dealer.
“CONNECTION FAILED”	Failed to establish pairing or connection	Try to establish the pairing or connection again.
“MEMORY FULL”	Reached the limit for the number of phone-book data in transfer	Delete registered data of unnecessary number in phone-book and try to transfer the register phone numbers in the phonebook again.
“NOT AVAILABLE”	Inoperable during driving	Operate the system after pulling over your car.

VEHICLE LOADING AND TOWING

Vehicle loading 6-1
Trailer towing 6-1

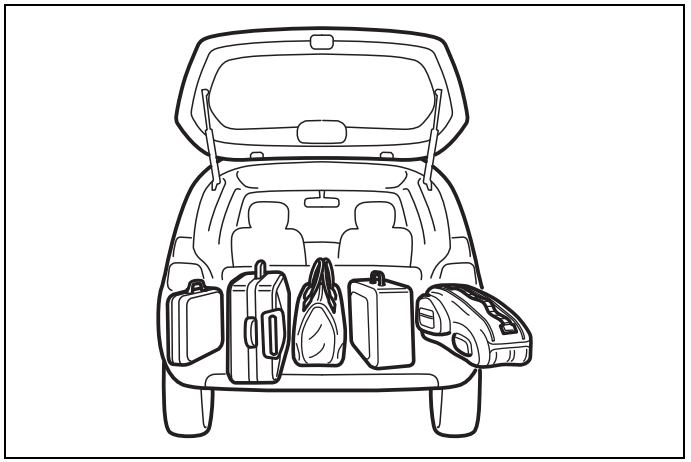

54G215

Vehicle loading

Your vehicle was designed for specific weight capacities. The weight capacities of your vehicle are indicated by the Gross Vehicle Weight Rating (GVWR) and the Permissible maximum Axle Weight (PAW, front and rear). The GVWR and PAW (front and rear) are listed in “SPECIFICATIONS” section.

GVWR – Maximum permissible overall weight of the fully loaded vehicle (including all the occupants, accessories and cargo plus the trailer nose weight if towing a trailer).
PAW (front and rear) – Maximum permissible weight on an individual axle.

Actual weight of the loaded vehicle and actual loads at the front and rear axles can only be determined by weighing the vehicle. Compare these weights to the GVWR and PAW (front and rear). If the gross vehicle weight or the load on either axle exceeds these ratings, you must remove enough weight to bring the load down to the rated capacity.

⚠ WARNING

Never overload your vehicle. The gross vehicle weight (sum of the weights of the vehicle, all the occupants, accessories, cargo plus trailer nose weight if towing a trailer) must never exceed the Gross Vehicle Weight Rating (GVWR). In addition, never distribute a load so that the weight on either the front or rear axle exceeds the Permissible maximum Axle Weight (PAW).

⚠ WARNING

Always distribute cargo evenly. To avoid personal injury or damage to your vehicle, always secure cargo to prevent it from shifting if the vehicle moves suddenly. Place heavier objects on the floor and as far forward in the cargo area as possible. Never pile cargo higher than the top of the seat backs.

Trailer towing

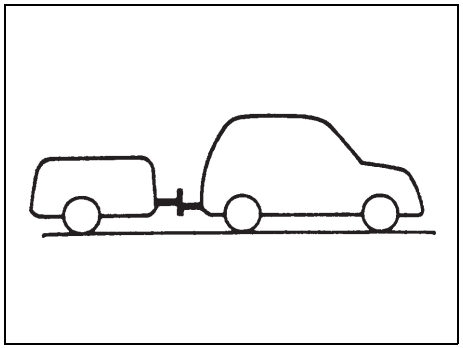

60A185

While towing a trailer can adversely affect handling, durability and fuel economy. Your vehicle can be used to tow a trailer which does not exceed the towing capacity specified below:

Maximum towing capacity (trailer, cargo & tow bar)

M16A engine model
Braked trailer: 1200 kg (2646 lbs)
Unbraked trailer: 400 kg (882 lbs)

D16AA engine model
Braked trailer: 1500 kg (3307 lbs)
Unbraked trailer: 600 kg (1323 lbs)

⚠ WARNING

For vehicles equipped with the radar brake support system, if your vehicle is used to tow a trailer, press the radar brake support OFF switch and turn off the radar brake support system. If not, unexpected accidents related to the system being turned on may occur.

NOTICE

Trailer towing puts additional stress on the engine, drive train and brakes of your vehicle. Never tow a trailer during the first 960 km (600 miles) of vehicle operation.

NOTE:
If your vehicle has a parking sensor system, set the system to the trailer mode via the information display. When this mode is set, the rear corner and rear center sensors are inhibited from operating. Refer to "Information display" in "BEFORE DRIVING" section.

Tow bars

Only use a tow bar that is designed to attach to the chassis of your vehicle, and a hitch that is designed to bolt to this tow bar. We recommend that you use a genuine SUZUKI tow bar (available as option), or equivalent.

⚠ WARNING

Never use a tow bar which attaches to the axle or the bumper of your vehicle.

Safety chains

Always attach safety chains between your vehicle and trailer. Cross safety chains under the nose of the trailer so that the nose will not drop to the road if the trailer becomes separated from the tow bar. Follow the manufacturer's recommendation for attaching safety chains. Always leave just enough slack to permit full turning. Never allow safety chains to drag on the road.

⚠ WARNING

Never attach safety chains to the bumper of your vehicle. Secure connections so that they cannot come loose.

Trailer lights

Check that your trailer is equipped with lights which meet local requirements. Always check for the proper operation of all trailer lights before you start to tow.

⚠ WARNING

Never connect trailer lights directly into your vehicle's electrical system, or electrical system damage may occur.

Brakes

⚠ WARNING

If trailer brakes are used, follow all instructions provided by the manufacturer. Never connect to the brake system of your vehicle and never take an electrical supply directly from the wiring harness.

Tires

⚠ WARNING

When towing a trailer, it is very important for your vehicle and trailer to have properly inflated tires. Your vehicle's tires should be inflated to the pressures listed on your vehicles tire information label. If laden pressures are listed on the label, the tires should be inflated to the laden pressures. Inflate trailer tires according to the specifications provided by the trailer manufacturer.

Mirrors

Check if your vehicle's mirrors meet local requirements for mirrors used on towing vehicles. If they do not, you must install the required mirrors before you tow.

Vehicle/trailer loading

To load your vehicle and trailer properly, you must know how to measure gross trailer weight and trailer nose weight.

Gross trailer weight is the weight of the trailer plus all the cargo in it. You can measure gross trailer weight by putting the fully loaded trailer on a vehicle scale.

Nose weight is the downward force exerted on the tow bar by the trailer coupler, with the trailer fully loaded and the coupler at its normal towing height. This weight can be measured using a bathroom scale.

The weight of your loaded trailer (gross trailer weight) should never exceed towing capacity.

Distribute cargo in your trailer so that nose weight is about 10% of gross trailer weight, but does not exceed the maximum vertical load on trailer hitch point. You should measure gross trailer weight and nose weight before towing to check that your load is properly distributed.

⚠ WARNING

Improper weight distribution of your trailer may result in poor vehicle handling and swaying of the trailer. Always check that trailer nose weight is about 10% of gross trailer weight, but does not exceed the maximum vertical load on trailer hitch point. Also check that the cargo is properly secured. Failure to observe this requirement may result in an accident.

⚠ WARNING

Never overload cargo on your trailer or your vehicle. Gross trailer weight must never exceed towing capacity. Gross vehicle weight (sum of the weights of the vehicle, all the occupants, accessories including tow bars and a trailer hitch, cargo and trailer nose weight) must never exceed the Gross Vehicle Weight Rating (GVWR) listed in "SPECIFICATIONS" section.

Additional trailer towing warnings

⚠ WARNING

Connect trailer lights and hook up safety chains every time you tow.

NOTICE

Because towing a trailer puts additional stress on your vehicle, more frequent maintenance will be required than under normal driving conditions. Follow the schedule in "Maintenance recommended under severe driving conditions".

⚠ WARNING

Your vehicle should be handled in a different way when towing a trailer. For the safety of yourself and others, observe the following precautions:

- **Practice turning, stopping, and reversing before you begin towing a trailer in traffic. Do not tow a trailer in traffic until you are confident that you can handle the vehicle and trailer safely.**
- **Never exceed towing speed limits or 80 km/h (50 mph), whichever is lower.**
- **Never drive at a speed that causes shaking or swaying of the trailer. If you notice even the slightest sign of shaking or swaying, slow down.**
- **When roads are wet, slippery or rough, drive at a slower speed than you would on dry or smooth roads. Failure to slow down when road conditions are bad can result in loss of control.**
- **Always have someone guide you when reversing.**

(Continued)

⚠ WARNING

(Continued)

- **Allow adequate stopping distance. Stopping distance is increased when you tow a trailer. For each 16 km/h (10 mph) of speed, allow at least one vehicle and trailer length between you and the vehicle ahead. Allow a greater stopping distance if roads are wet or slippery.**
- **If the trailer has over-run brakes, apply the brakes gradually to avoid snatching caused by the trailer wheels locking.**
- **Slow down before corners and maintain a steady speed while cornering. Deceleration or acceleration while cornering can result in loss of control. Remember that a larger than normal turning radius is needed because the trailer wheels will be closer than vehicle wheels to the inside of the turn.**
- **Avoid sudden acceleration and stopping of the vehicle. Do not make quick maneuvers unless they are necessary.**
- **Slow down in cross winds and be prepared for gusts of wind from large passing vehicles.**

(Continued)

⚠ WARNING

(Continued)

- **Be careful when overtaking other vehicles. Allow enough room for your trailer before changing lanes, and use turn signal lights properly in advance.**
- **Slow down and shift into a lower gear before you reach long or steep downhill grades. It is hazardous to attempt downshifting while you are descending a hill.**
- **Do not step on the brake pedal strongly. This could cause the brakes to over-heat resulting in reduced braking efficiency. Use engine braking as much as possible.**
- **Because of the added trailer weight, your engine may overheat on hot days when going up long or steep hills. Pay attention to your engine temperature gauge. If it indicates overheating, pull off the road and stop the vehicle in a safe place. Refer to “Engine trouble: Overheating” in “EMERGENCY SERVICE” section.**

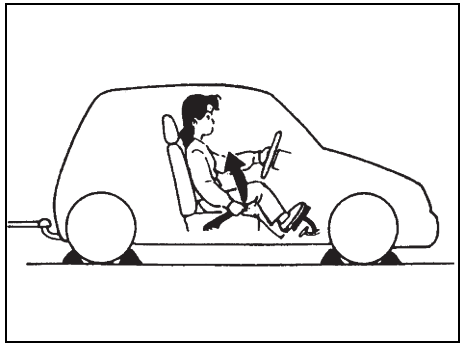

60A186

⚠ WARNING

When parking your vehicle and connected trailer, always use the following procedure:
1) **Apply the vehicle's brakes firmly.**
2) **Have another person place wheel chocks under the wheels of the vehicle and the trailer while you are holding the brakes.**
3) **Slowly release the brakes until the wheel chocks absorb the load.**
4) **Fully engage the parking brake.**
5) **Turn off the engine, and then shift into reverse or first gear.**

(Continued)

⚠ WARNING

(Continued)
When starting out after parking:
1) **Depress the clutch and start the engine.**
2) **Shift into gear, release the parking brake, and slowly pull away from the chocks.**
3) **Stop, apply the brakes firmly and hold them.**
4) **Have another person remove the chocks.**

Trailer hitch installation points

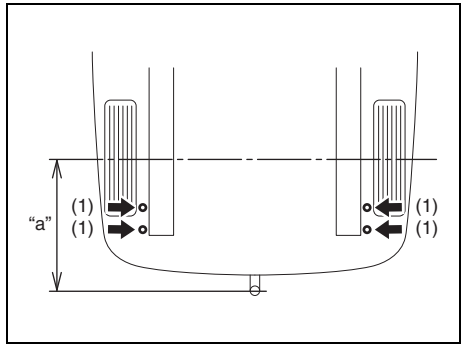

61MM0B111

(1) Side

Maximum vertical load on trailer hitch point (EU)
75 kg (165 lbs)

Maximum permissible overhang "a"
883 mm (34.7 in.)

INSPECTION AND MAINTENANCE

60G410

Maintenance schedule 7-2
Drive belt 7-20
Engine oil and filter 7-20
Engine coolant 7-26
Air cleaner 7-28
Spark plugs 7-29
Gear oil 7-30
Clutch pedal 7-32
Fuel filter (diesel engine) 7-33
Brakes 7-33
Steering 7-35
Tires 7-36
Battery 7-39
Fuses 7-41
Headlight aiming 7-44
Bulb replacement 7-45
Wiper blades 7-55
Windshield washer fluid 7-59
Air conditioning system 7-59

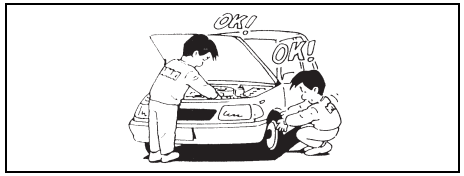

60B128S

⚠ WARNING

Take extreme care when working on your vehicle to prevent accidental injury. Carefully observe the following precautions:

- **To prevent damage or unintended activation of the air bag system or seat belt pretensioner system, check that the battery is disconnected and the ignition switch has been in "LOCK" position or the ignition mode has been "LOCK" (OFF) for at least 90 seconds before performing any electrical service work on your SUZUKI vehicle. Do not touch air bag system components, seat belt pretensioner system components or wires.**
  The wires are wrapped with yellow tape or yellow tubing, and the couplers are yellow for easy identification.
- **Do not leave the engine running in garages or other confined areas.**

(Continued)

⚠ WARNING

(Continued)

- **When the engine is running, keep hands, clothing, tools, and other objects away from the fan and drive belt. Even though the fan may not be moving, it can automatically turn on without warning.**
- **When it is necessary to perform service work with the engine running, check that the parking brake is set fully and the transaxle is in Neutral.**
- **Do not touch ignition wires or other ignition system parts when starting the engine or when the engine is running, or you could receive an electric shock.**
- **Be careful not to touch a hot engine, exhaust manifold and pipes, muffler, radiator and water hoses.**
- **Do not allow smoking, sparks, or flames around fuel or the battery. Flammable fumes are present.**
- **Do not get under your vehicle if it is supported only with the portable jack provided in your vehicle.**
- **Be careful not to cause accidental short circuits between the positive and negative battery terminals.**

(Continued)

⚠ WARNING

(Continued)

- **Keep used oil, coolant, and other fluids away from children and pets. Dispose of used fluids properly; never pour them on the ground, into sewers, etc.**

Maintenance schedule

⚠ WARNING

SUZUKI recommends that maintenance of your vehicle be performed by your authorized SUZUKI dealer or a qualified service technician. If you are not sure whether you can successfully complete any of maintenance jobs, ask your authorized SUZUKI dealer to do the maintenance for you.

The following table shows the times when you should perform regular maintenance on your vehicle. This table shows the timing when you should perform inspections, adjustments, lubrication and other services, by kilometer, mile and month.

This table is generated in terms of the following points:
- Place of destination
- For gasoline engine model or diesel engine model
- Recommended maintenance items for inspection, adjustment and replacement by a dealer, or items other than the above-mentioned ones

Check an explanation of “How to understand each table” in this section.

If your routine use of vehicle applies in one of the following conditions, you need to perform maintenance according to the maintenance interval under severe condition. For some items, the maintenance interval for severe condition is not described in the table. In this case, perform maintenance according to the maintenance interval for normal condition.
The maintenance interval for severe condition is shorter than the one for normal condition.

Maintenance recommended under severe driving conditions
- When most trips are less than 6 kilometers (4 miles)
- When most trips are less than 16 kilometers (10 miles) and outside temperature remains below freezing
- Idling and/or low-speed operation in stop-and-go traffic
- Operating in extremely cold weather and/or on salted roads
- Operating in rough and/or muddy areas.
- Operating in dusty areas
- Repeated high speed drive or high engine revolutions
- Towing a trailer, if admitted

When the vehicle is used for delivery service, police, taxi or other commercial applications.

NOTICE

Whenever it becomes necessary to replace parts on your vehicle, it is recommended that you use genuine SUZUKI replacement parts or their equivalent.

How to understand each table

EXAMPLE

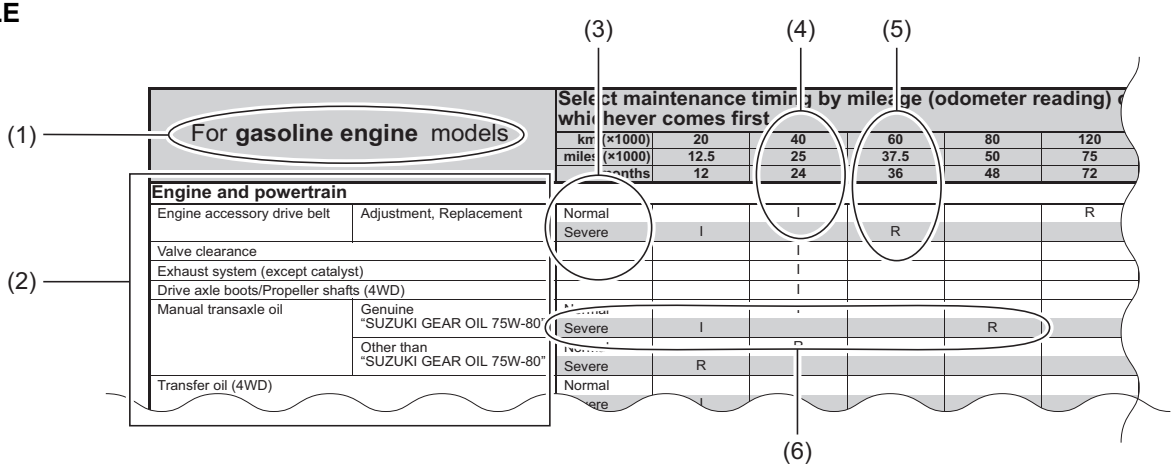

54P000750

(1) Model of vehicle
(2) Maintenance item
(3) Driving condition
Necessary maintenance operation and timing will vary depending on your driving condition.
Some items have two different conditions of "Normal" and "Severe", which are defined as follows.

"Normal": If driving is usually done under normal driving condition
"Severe": If driving is usually done under severe driving condition

For details of each condition, refer to "Maintenance recommended under severe driving condition" in this section.

If this part is blank, there is no classification in driving conditions.

(4) This means that you should perform the 1st operation of “I”, which is defined as follows, by 40000 km (25000 miles) or 24 months. Subsequently, you should perform the 2nd and later operation of “I” at the same interval.

“I”: Inspection including cleaning, adjustment, lubrication or replacement as necessary

(5) This means that you should perform the 1st operation of “R”, which is defined as follows, by 60000 km (37500 miles) or 36 months. Subsequently, you should perform the 2nd and later operation of “R” at the same interval.

“R”: Replacement or change

(6) This shows the case where a genuine “SUZUKI GEAR OIL 75W-80” is used under “Severe” condition. The maintenance interval is as follows.

km (x1000)	20	40	60	80	100	120	140	160	·····
miles (x1000)	12.5	25	37.5	50	62.5	75	87.5	100	·····
months	12	24	36	48	60	72	84	96	·····
	“I”			“R”	“I”			“R”	

By place of destination, maintenance schedule tables are separated. Refer to each of the following pages:

- EU countries (except for Russia)
  - for gasoline engine model: (page 7-5)
  - for diesel engine model: (page 7-9)
- Mexico
  - for gasoline engine model: (page 7-13)
- Except for EU countries and Mexico
  - for gasoline engine model: (page 7-17)

EU countries (except for Russia)

Recommended maintenance items by an authorized SUZUKI dealer or a qualified service technician

For **gasoline engine** models		Select maintenance timing by mileage (odometer reading) or months, whichever comes first.						
		km (×1000)	20	40	60	80	120	160
		miles (×1000)	12.5	25	37.5	50	75	100
		months	12	24	36	48	72	96
Engine and powertrain								
Engine accessory drive belt	Adjustment, Replacement	Normal		I			R	
		Severe	I		R			
Valve clearance				I				
Exhaust system (except catalyst)				I				
Drive axle boots / Propeller shafts (4WD)				I				
Manual transaxle oil	Genuine “SUZUKI GEAR OIL 75W-80”	Normal		I				R
		Severe	I			R		
	Other than “SUZUKI GEAR OIL 75W-80”	Normal		R				
		Severe	R					
Transfer oil (4WD)		Normal		I				R
		Severe	I			R		
Rear differential oil (4WD)		Normal		I				R
		Severe	I			R		
Fuel and emission control system								
Fuel lines				I				
Fuel tank				I				
PCV valve						I		
Fuel evaporative emission control system							I	

For **gasoline engine** models			Select maintenance timing by mileage (odometer reading) or months, whichever comes first.			
			km (×1000)	20	40	60
			miles (×1000)	12.5	25	37.5
			months	12	24	36
Brake						
Brake discs and pads				I		
Brake hoses and pipes					I	
Brake fluid	Replacement				R	
Brake lever and cable	Adjustment (1st 20000 km only)			I		
Chassis, body and others						
Clutch (Pedal and fluid level)					I	
Wheel bearings			Severe only	I		
Suspension system					I	
Steering system					I	
Air conditioner filter element (if equipped) *1	Inspection	First time only	Normal		I	
		Second time and after	Normal			I
	Replacement		Normal			R
	Inspection or replacement		Severe	I		R

NOTE:
**1:Clean more frequently if the air flow from the air conditioner decreases.*

⚠ WARNING

The shock absorbers are filled with high pressure gas. Never attempt to disassemble them or throw them into a fire. Avoid storing them near a heater or heating device. When scrapping the absorber, the gas must be released from the absorber safely. Ask your dealer for assistance.

Items other than recommended maintenance by an authorized SUZUKI dealer or a qualified service technician

For **gasoline engine** models			Select maintenance timing by mileage (odometer reading) or months, whichever comes first.							
			km (×1000)	7.5	10	15	20	40	80	160
			miles (×1000)	4.687	6.25	9.375	12.5	25	50	100
			months	6		12		36	48	96
Engine and powertrain										
Engine accessory drive belt	Tension check		Normal					I		
			Severe				I			
Engine oil and engine oil filter *1	ACEA Standards or SUZUKI GENUINE OIL (#1)		Normal				R			
			Severe		R					
	Other than ACEA Standards or SUZUKI GENUINE OIL (#1)		Normal			R				
			Severe	R						
Engine coolant	"SUZUKI LLC: Super (Blue)" (#2)	First time only								R
		Second time and after							R	
	"SUZUKI LLC: Standard (Green)"							R		

#1:For further details, refer to "Engine oil and filter" in this section.
#2:Perform the engine coolant level check under the daily inspection in "OPERATING YOUR VEHICLE" section.
If you use the engine coolant other than "SUZUKI LLC (Blue)" for replacement, follow the schedule of "SUZUKI LLC: Standard (Green)".

NOTE:
**1: Refer to "Oil change request light (if equipped)" in "BEFORE DRIVING" section.*

For **gasoline engine** models		Select maintenance timing by mileage (odometer reading) or months, whichever comes first.							
		km (×1000)	2.5	10	20	30	40		100
		miles (×1000)	1.562	6.25	12.5	18.75	25		62.5
		months	-	8	12	24		36	84
Fuel and emission control system									
Spark plugs when **unleaded** fuel is used	(Highly recommended) Iridium plug (#3)	Normal							R
		Severe				R			
	(Standard type) Nickel plug	Normal						R(#4)	
		Severe		R					
Spark plugs when **leaded** fuel is used	(Highly recommended) Iridium plug (#3)					R			
	(Standard type) Nickel plug			R					
Air cleaner filter element *2	Paved-road	Normal			I			R	
		Severe	I			R			
	Dusty condition		I			R			
Brake									
Brake fluid	Check						I		
Brake lever and cable	Check (1st 20000 km only)				I				
Chassis, body and others									
Tires/Wheels					I				
All latches, hinges and locks							I		

#3: If you replace the spark plugs other than iridium plug, follow the schedule of nickel plug.
#4: Replace every 50000 km if the local law requires.

NOTE:
**2: Inspect more frequently if the vehicle is used under dusty conditions.*

Recommended maintenance items by an authorized SUZUKI dealer or a qualified service technician

For **diesel engine** models			Select maintenance timing by mileage (odometer reading) or months, whichever comes first.							
		km (×1000)	20	40	60		-	80	140	160
		miles (×1000)	12.5	25	37.5		-	50	87.5	100
		months	12	24	-	36		48	60	96
Engine and powertrain										
Engine accessory drive belt	Ribbed belt	Normal		I				R		
		Severe	I			R				
Camshaft timing belt		Normal							R	
		Severe					R			
Exhaust system (except catalyst)				I						
Drive axle boots/Propeller shafts (4WD)				I						
Manual transaxle oil	Genuine “SUZUKI GEAR OIL 75W-80”	Normal		I						R
		Severe	I					R		
	Other than “SUZUKI GEAR OIL 75W-80”	Normal		R						
		Severe	R							
Transfer oil (4WD)		Normal		I						R
		Severe	I					R		
Rear differential oil (4WD)		Normal		I						R
		Severe	I					R		
Fuel and emission control system										
Fuel lines				I						
Fuel filter					R					
Fuel tank				I						

For **diesel engine** models			Select maintenance timing by mileage (odometer reading) or months, whichever comes first.			
			km (×1000)	20	40	60
			miles (×1000)	12.5	25	37.5
			months	12	24	36
Brake						
Brake discs and pads				I		
Brake hoses and pipes					I	
Brake fluid	Replacement				R	
Brake lever and cable	Adjustment (1st 20000 km only)			I		
Chassis, body and others						
Clutch (Pedal and fluid level)					I	
Wheel bearings			Severe only	I		
Suspension system					I	
Steering system					I	
Air conditioner filter element (if equipped) *1	Inspection	First time only	Normal		I	
		Second time and after	Normal			I
	Replacement		Normal			R
	Inspection or replacement		Severe	I		R

NOTE:
**1:Clean more frequently if the air flow from the air conditioner decreases.*

⚠ WARNING

The shock absorbers are filled with high pressure gas. Never attempt to disassemble them or throw them into a fire. Avoid storing them near a heater or heating device. When scrapping the absorber, the gas must be released from the absorber safely. Ask your dealer for assistance.

Items other than recommended maintenance by an authorized SUZUKI dealer or a qualified service technician

For **diesel engine** models			Select maintenance timing by mileage (odometer reading) or months, whichever comes first.									
			km (×1000)	2.5	20	-	30	-	40		80	160
			miles (×1000)	1.562	12.5	-	18.75	-	25		50	100
			months	-	12		24		24	36	48	96
Engine and powertrain												
Engine oil and engine oil filter*1	Synthetic oil		Normal					R				
			Severe			R						
Engine coolant	"SUZUKI LLC: Super (Blue)" (#1)	First time only										R
		Second time and after									R	
	"SUZUKI LLC: Standard (Green)"									R		
Fuel and emission control system												
Air cleaner filter element *2	Paved-road		Normal		I							
			Severe	I			R					
	Dusty condition			I			R					
Brake												
Brake fluid	Check								I			
Brake lever and cable	Check (1st 20000 km only)				I							
Chassis, body and others												
Tires/Wheels					I							
All latches, hinges and locks									I			

#1: Perform the engine coolant level check under the daily inspection in "OPERATING YOUR VEHICLE" section.
If you use the engine coolant other than "SUZUKI LLC (Blue)" for replacement, follow the schedule of "SUZUKI LLC: Standard (Green)".

NOTE:
**1: Replace when the oil change request light blinks or each months that listed in table.*
**2: Inspect more frequently if the vehicle is used under dusty conditions.*

MEMO

For Mexico

Recommended maintenance items by an authorized SUZUKI dealer or a qualified service technician

For **gasoline engine** models		Select maintenance timing by mileage (odometer reading) or months, whichever comes first.										
		miles (×1000)	6	7.5	12	15	22.5	30	37.5	45	60	90
		km (×1000)	10	12.5	20	25	37.5	50	62.5	75	100	150
		months	6	7.5	12	15	22.5	30	37.5	45	60	90
Engine and powertrain												
Valve lash (clearance)							I					
Cooling system hoses and connections		Normal						I				
		Severe				I						
Exhaust pipes and mountings		Normal						I				
		Severe				I						
Drive axle boots		Normal		I								
		Severe	I									
Manual transaxle oil	Genuine “SUZUKI GEAR OIL 75W-80”	Normal				I						R
		Severe				I				R		
	Other than “SUZUKI GEAR OIL 75W-80”	Normal				I		R				
		Severe				R						
Fuel and emission control system												
Emission-related hoses & tubes		Normal									I(#1)	
		Severe									I	
Ignition coil (plug cap)								I				
Fuel tank & cap						I						
Fuel filter			Replace every 250000 km (150000 miles) or 150 months.									
Fuel lines and connections		Normal						I				
		Severe				I						

#1: Inspect every 100000 km (60000 miles) or 60 months for 1st time and 2nd time.
Inspect every 50000 km (30000 miles) or 30 months for 3rd time, by a shorter interval.
These inspection intervals will be repeated after 4th time.

For details, refer to the following maintenance timing.
1st: 100000 km (60000 miles) or 60 months 2nd: 200000 km (120000 miles) or 120 months 3rd: 250000 km (150000 miles) or 150 months
4th: 350000 km (210000 miles) or 210 months 5th: 450000 km (270000 miles) or 270 months 6th: 500000 km (300000 miles) or 300 months

For **gasoline engine** models			Select maintenance timing by mileage (odometer reading) or months, whichever comes first.					
			miles (×1000)	6	7.5	12	15	60
			km (×1000)	10	12.5	20	25	100
			months	6	7.5	12	15	60
Brake								
Brake discs and pads (front, rear)		First time only	Normal		I			
		Second time and after	Normal				I	
		First time only	Severe	I				
		Second time and after	Severe			I		
Brake hoses and pipes		First time only	Normal		I			
		Second time and after	Normal				I	
		First time only	Severe	I				
		Second time and after	Severe			I		
Brake fluid	Replacement						I	R
Brake pedal stroke	Adjustment						I	
Parking brake lever and cable	Lever adjustment	First time only	Normal		I			
		Second time and after	Normal				I	
		First time only	Severe	I				
		Second time and after	Severe				I	
Chassis, body and others								
Wheel discs			Normal		I			
			Severe	I				
Wheel bearings			Severe only			I		
Suspension system			Normal		I			
			Severe	I				

⚠ WARNING

The shock absorbers are filled with high pressure gas. Never attempt to disassemble them or throw them into a fire. Avoid storing them near a heater or heating device. When scrapping the absorber, the gas must be released from the absorber safely. Ask your dealer for assistance.

For **gasoline engine** models		Select maintenance timing by mileage (odometer reading) or months, whichever comes first.				
		miles (×1000)	6	7.5	15	30
		km (×1000)	10	12.5	25	50
		months	6	7.5	15	30
Chassis, body and others						
Steering system	Steering wheel linkage	Normal		I		
		Severe	I			
Air conditioner filter element (if equipped) *1		Normal			I	R
		Severe	I			R

NOTE:
**1:Clean more frequently if the air flow from the air conditioner decreases.*

The U.S. Environmental Protection Agency or the California Air Resources Board has determined that the failure to perform recommended maintenance items enclosed with a rectangle will not nullify the emission warranty or limit recall liability prior to the completion of the vehicle's useful life. SUZUKI, however, urges that all recommended maintenance services be performed at the indicated intervals and the maintenance recorded.

For **gasoline engine** models	Select maintenance timing by mileage (odometer reading) or months, whichever comes first.									
miles (×1000)	15	30	45	60	75	90	105	120	135	150
km (×1000)	25	50	75	100	125	150	175	200	225	250
months	15	30	45	60	75	90	105	120	135	150
Items										
Cooling system hoses and connection		I								
Exhaust pipes and mountings		I		I		I		I		
Emission-related hoses & tubes				I				I		
Ignition coil (plug cap)		I		I		I				I
Fuel tank & cap	I	I	I	I	I	I	I	I	I	
Fuel line and connection		I		I		I		I		

Items other than recommended maintenance by an authorized SUZUKI dealer or a qualified service technician

For **gasoline engine** models			Select maintenance timing by mileage (odometer reading) or months, whichever comes first.							
			miles (×1000)	3	6	7.5	15	30	45	90
			km (×1000)	5	10	12.5	25	50	75	150
			months	3	6	7.5	15	30	45	90
Engine and powertrain										
Drive belt	Inspect for damage							I		
Engine oil and oil filter			Normal			R				
			Severe	R						
Engine coolant	"SUZUKI LLC: Super (Blue)" (#1)	First time only								R
		Second time and after							R	
	"SUZUKI LLC: Standard (Green)"							R		
Fuel and emission control system										
Spark plugs	Nickel plug							R		
Air cleaner filter element *1			Normal					R		
			Severe	I				R		
Brake										
Brake fluid	Fluid level check						I			
Brake pedal stroke	Check						I			
Parking brake lever and cable	Lever movement check	First time only	Normal			I				
		Second time and after	Normal				I			
		First time only	Severe		I					
		Second time and after	Severe				I			
Chassis, body and others										
Clutch	Pedal and fluid level						I			
Tires (including tire rotation)			Normal			I				
			Severe		I					
All latches, hinges and locks			Normal			I				
			Severe		I					
Steering system	Steering wheel movement		Normal			I				
			Severe		I					

#1: Perform the engine coolant level check under the daily inspection in "OPERATING YOUR VEHICLE" section.
If you use the engine coolant other than "SUZUKI LLC (Blue)" for replacement, follow the schedule of "SUZUKI LLC: Standard (Green)".

NOTE:
**1:Inspect more frequently if the vehicle is used under dusty conditions.*

Except for EU countries and Mexico

Recommended maintenance items by an authorized SUZUKI dealer or a qualified service technician

For **gasoline engine** models		Select maintenance timing by mileage (odometer reading) or months, whichever comes first.							
		km (×1000)	15	30	45	60	90	105	150
		miles (×1000)	9	18	27	36	54	63	90
		months	12	24	36	48	72	-	120
Engine and powertrain									
Engine accessory drive belt	Adjustment, Replacement	Normal			I		R		
		Severe	I		R				
Valve clearance				I					
Exhaust system (except catalyst)				I					
Drive axle boots/Propeller shafts (4WD)		Normal			I				
		Severe	I						
Manual transaxle oil	Genuine “SUZUKI GEAR OIL 75W-80”	Normal		I					R
		Severe		I		R			
	Other than “SUZUKI GEAR OIL 75W-80”	Normal	I(#1)		R				
		Severe		R					
Transfer oil (4WD)		Normal		I					R
		Severe		R					
Rear differential oil (4WD)		Normal		I					R
		Severe		R					
Fuel and emission control system									
Fuel lines				I					
Fuel filter (except for Russia)								R	
Fuel tank					I				
PCV valve							I		
Fuel evaporative emission control system							I		

#1: Inspect only at 15000 km (9000 miles) or 12 months.

For **gasoline engine** models			Select maintenance timing by mileage (odometer reading) or months, whichever comes first.			
			km (×1000)	15	30	45
			miles (×1000)	9	18	27
			months	12	24	36
Brake						
Brake discs and pads				I		
Brake hoses and pipes					I	
Brake fluid	Replacement				R	
Brake lever and cable	Adjustment (1st 15000 km only)			I		
Chassis, body and others						
Clutch (Pedal and fluid level)					I	
Wheel bearings			Severe only	I		
Suspension system					I	
Steering system					I	
Air conditioner filter element (if equipped) *1	Inspection	First time only	Normal		I	
		Second time and after	Normal			I
	Replacement		Normal			R
	Inspection or replacement		Severe	I		R

NOTE:
**1:Clean more frequently if the air flow from the air conditioner decreases.*

⚠ WARNING

The shock absorbers are filled with high pressure gas. Never attempt to disassemble them or throw them into a fire. Avoid storing them near a heater or heating device. When scrapping the absorber, the gas must be released from the absorber safely. Ask your dealer for assistance.

Items other than recommended maintenance by an authorized SUZUKI dealer or a qualified service technician

For **gasoline engine** models				Select maintenance timing by mileage (odometer reading) or months, whichever comes first.								
				km (×1000)	2.5	7.5	10	15	30	45	75	150
				miles (×1000)	1.5	4.5	6	9	18	27	45	90
				months	-	6	8	12	24	36	48	96
Engine and powertrain												
Engine accessory drive belt	Tension check			Normal						I		
				Severe				I				
Engine oil and engine oil filter				Normal				R				
				Severe		R						
Engine coolant	"SUZUKI LLC: Super (Blue)" (#1)	First time only										R
		Second time and after									R	
	"SUZUKI LLC: Standard (Green)"									R		
Fuel and emission control system												
Spark plugs when **unleaded** fuel is used	(Standard type) Nickel plug			Normal						R(#2)		
				Severe			R					
Spark plugs when **leaded** fuel is used	(Standard type) Nickel plug						R					
Air cleaner filter element *1	Paved-road			Normal				I		R		
				Severe	I				R			
	Dusty condition				I				R			
Brake												
Brake fluid	Check								I			
Brake lever and cable	Check (1st 15000 km only)							I				
Chassis, body and others												
Tires/Wheels								I				
All latches, hinges and locks									I			

#1: Perform the engine coolant level check under the daily inspection in "OPERATING YOUR VEHICLE" section.
If you use the engine coolant other than "SUZUKI LLC (Blue)" for replacement, follow the schedule of "SUZUKI LLC: Standard (Green)".
#2: Replace every 50000 km if the local law requires.

NOTE:
**1:Inspect more frequently if the vehicle is used under dusty conditions.*

Drive belt

⚠ WARNING

When the engine is running, keep hands, hair, clothing, tools, etc. away from the moving fan and drive belts.

Check that the drive belt tension is correct. If the belt is too loose, insufficient battery charging, engine overheating, poor power steering, poor air conditioning, or excessive belt wear can result. When you press the belt with your thumb midway between the pulleys, there should be a deflection according to the following chart.

The belts should also be examined to ensure that they are not damaged.

If you need to replace or adjust the belt have it done by your SUZUKI dealer.

(For gasoline engine model)

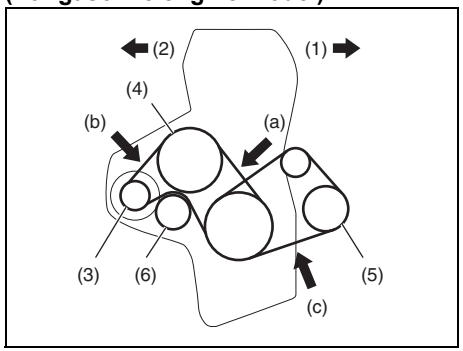

61MS2A003

(1) Front (2) Rear
(3) Generator (4) Water pump
(5) Air conditioner compressor
(6) Idler pulley

Drive belt deflection (100 N (10 kg, 22 lbs) press)

(a) 6.5 - 7.9 mm (0.26 - 0.31 in.)
(b) 4.8 - 6.2 mm (0.19 - 0.24 in.)
(c) 7 - 8 mm (0.28 - 0.31 in.)

(For diesel engine model)
The drive belts tension is adjusted automatically.

Engine oil and filter

Specified oil

(For gasoline engine model)

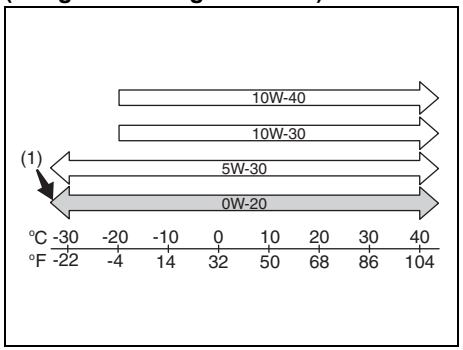

68LM20702

(1) Preferred

Check that the engine oil you use comes under the quality classification as listed below:
- ACEA A1/B1, A3/B3, A3/B4, A5/B5
- API SL, SM, SN
- ILSAC GF-3, GF-4, GF-5

Select the appropriate oil viscosity according to the above chart.

NOTE:
- *(For EU countries)*
  The replacement timing varies with the type of engine oil that you choose.
  Refer to "Maintenance schedule" in this section for corresponding maintenance schedule.
- *(For Mexico)*
  For additional instruction, refer to "SUPPLEMENT" section in the end of this book.

SAE 0W-20 (1) is the best choice for good fuel economy and good starting in cold weather.

NOTE:
We recommend that you use SUZUKI genuine oil. To purchase it, see your SUZUKI dealer.

(For diesel engine model)
Check that the engine oil you use comes under the quality classification of ACEA C2.

SAE 0W-30 is the best choice for good fuel economy and good starting in cold weather.

NOTICE
Use only the recommended ACEA C2. Use of non-recommended engine oil will cause damage to a diesel engine and DPF®.

Oil level check

(For gasoline engine model)

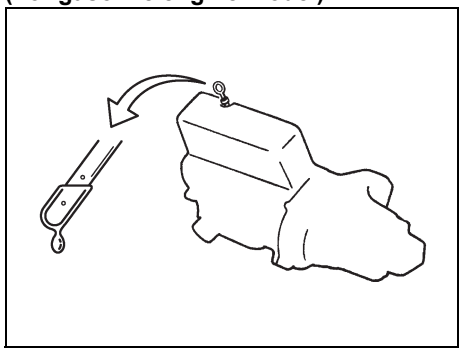

80G064

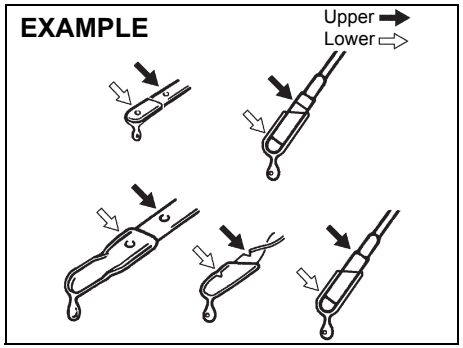

52D084

(For diesel engine model)

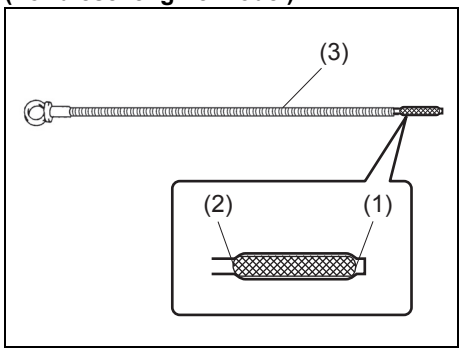

54P000701

(1) MIN
(2) MAX
(3) Engine oil dipstick

It is important to keep the engine oil at the correct level for proper lubrication of your vehicle's engine. Check the oil level with the vehicle on a level surface. The oil level indication may be inaccurate if the vehicle is on a slope. The oil level should be checked either before starting the engine or at least 5 minutes after stopping the engine.
The handle of the engine oil dipstick is colored with yellow for easy identification.

Pull out the oil dipstick, wipe oil off with a clean cloth, insert the dipstick all the way into the engine, and then remove it again. The oil on the stick should be between the upper and lower limits shown on the stick. If the oil level indication is near the lower limit, add enough oil to raise the level to the upper limit.

NOTICE

Failure to check the oil level regularly could lead to serious engine trouble due to insufficient oil.

NOTICE

(For diesel engine model)
Do not top up the oil over the MAX limit. Too much oil causes serious engine trouble.

NOTE:
When the soot particles accumulated in the DPF® are combusted, the amount of the engine oil may increase due to the dilution with the fuel. This is not a vehicle malfunction. The soot particles accumulated in the DPF® are combusted automatically during driving. However, they may not be combusted in the following cases.

- *When you drive at low speed for a long time*
- *When you repeat a short-time or short-distance driving*

1) When the DPF® warning light comes on, drive at a speed of 50 km/h (31 mph) or higher for more than 25 minutes to regenerate the DPF® properly. For details, refer to “Diesel particulate filter (DPF®)” in “OPERATING YOUR VEHICLE” section.
2) When the oil change request light blinks, change the engine oil and oil filter, and reset the oil life monitoring system. To reset the oil life monitoring system, consult your SUZUKI dealer.
3) When the engine oil level exceeds the MAX level on the dipstick, consult your SUZUKI dealer.

Refilling

EXAMPLE

81A147

Remove the oil filler cap and pour oil slowly through the filler hole to bring the oil level to the upper limit on the dipstick. Be careful not to overfill the oil. Too much oil is almost as bad as too little oil. After refilling, start the engine and allow it to idle for about a minute. Stop the engine, wait about 5 minutes and check the oil level again.

Changing engine oil and filter

Drain the engine oil while the engine is still warm.

EXAMPLE

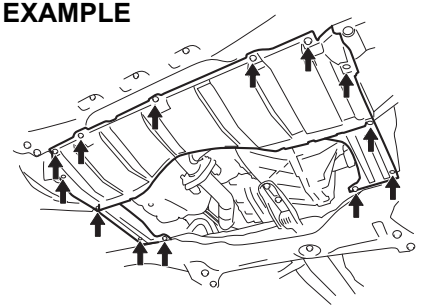

61MM0B061

1) Remove the bolts and screws, and then remove the engine undercover.

EXAMPLE

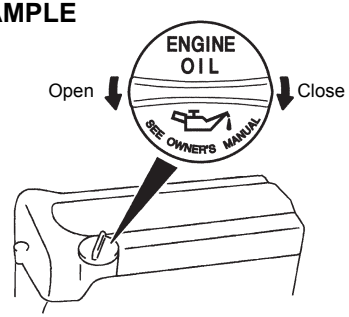

56KN054

2) Remove the oil filler cap.
3) Place a drain pan under the drain plug.
4) Using a wrench, remove the drain plug and drain the engine oil.

⚠ CAUTION

The engine oil temperature may be high enough to burn your fingers when the drain plug is loosened. Wait until the drain plug is cool enough to touch with your bare hands.

EXAMPLE

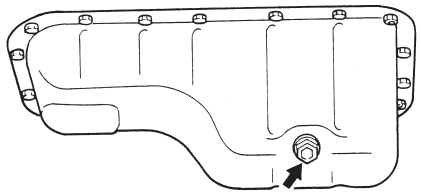

60G306

Tightening torque for drain plug
Gasoline engine :
35 Nm (3.6 kg-m, 25.8 lb-ft)
Diesel engine :
20 Nm (2.0 kg-m, 14.8 lb-ft)

⚠ WARNING

Engine oil can be hazardous. Children and pets may be harmed by swallowing new or used oil. Keep new and used oil and used oil filters away from children and pets.
Repeated, prolonged contact with used engine oil may cause skin cancer.
Brief contact with used oil may irritate skin.

(Continued)

⚠ WARNING

(Continued)
To minimize your exposure to used oil, wear a long-sleeve shirt and moisture-proof gloves (such as dish-washing gloves) when changing oil. If oil contacts your skin, wash thoroughly with soap and water.
Launder any clothing or rags if it is with oil.
Recycle or properly dispose of used oil and oil filters.

5) Reinstall the drain plug and gasket. Tighten the plug with a wrench to the specified torque.

NOTE:
- *Whenever the engine oil is changed, the oil life monitoring must be reset to monitor the next oil change timing properly. To reset the light, consult your SUZUKI dealer. If you reset it by yourself, refer to "Setting mode" in "BEFORE DRIVING" section (for gasoline engine model).*
- *For more information of the oil change request light and oil life monitoring, refer to "Oil change request light (if equipped)" and "Information display" in "BEFORE DRIVING" section.*

Oil filter replacement

NOTE:
(For diesel engine model)
Since special procedures and tools are required, ask your authorized SUZUKI dealer for this job.

1) Using an oil filter wrench, turn the oil filter counterclockwise and remove it.
2) Using a clean rag, wipe off the mounting surface on the engine where the new filter will be seated.
3) Smear a small amount of engine oil around the rubber gasket of the new oil filter.
4) Screw the new filter by hand until the filter gasket contacts the mounting surface.

(For gasoline engine model)

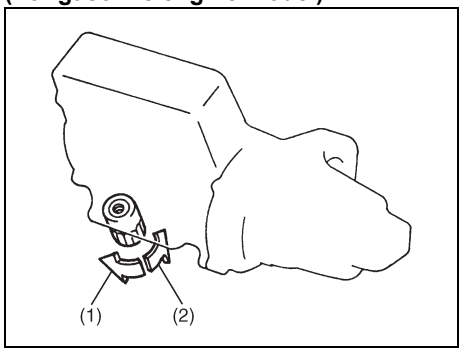

54G092

(1) Loosen
(2) Tighten

Tightening (viewed from filter top)

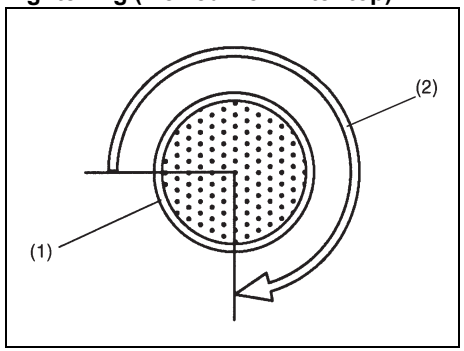

54G093

(1) Oil filter
(2) 3/4 turn

(For diesel engine model)

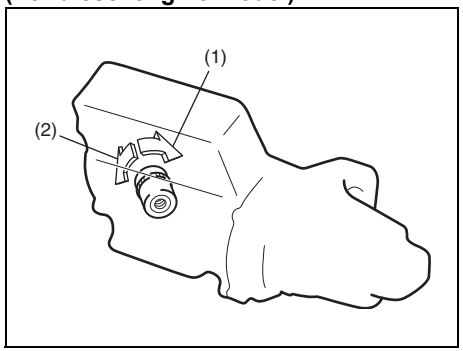

79J142

(1) Loosen
(2) Tighten

NOTICE
To tighten the oil filter properly, it is important to accurately identify the position at which the filter gasket first contacts the mounting surface.

5) Tighten the filter as specified below from the point of contact with the mounting surface (or to the specified torque) using an oil filter wrench.

   Tightening torque for oil filter
   3/4 turn or
   Gasoline engine :
   14 Nm (1.4 kg-m, 10.3 lb-ft)
   Diesel engine :
   30 Nm (3.1 kg-m, 22.1 lb-ft)

NOTICE
To prevent oil leakage, check that the oil filter is tight, but do not over-tighten it.

Refill with oil and oil leakage check

1) Pour oil through the filler hole and install the filler cap.
   For the approximate capacity of the oil, refer to “Capacities” in “SPECIFICATIONS” section.
2) Start the engine and carefully check the oil filter and the drain plug for leakage. Run the engine at various speeds for at least 5 minutes.
3) Stop the engine and wait about 5 minutes. Check the oil level again and add oil if necessary. Check for leakage again.

NOTICE

- **When replacing the oil filter, it is recommended that you use a genuine SUZUKI replacement filter. If you use an aftermarket filter, check that it is of equivalent quality and follow the manufacturer’s instructions.**
- **Oil leakage from the periphery of the oil filter or drain plug indicate incorrect installation or gasket damage. If you find any leakage or are not sure that the filter has been properly tightened, have the vehicle inspected by your SUZUKI dealer.**

Engine coolant

Selection of coolant

NOTICE

“SUZUKI LLC: Super (Blue) coolant”; This coolant is already diluted to the proper percentage. Do not dilute with distilled water additionally. Doing so may result in the possibility of freezing and/or overheating coolant.

To maintain optimum performance and durability of your engine, use SUZUKI genuine coolant or equivalent.

NOTE:
If you replace the engine coolant with coolant other than “SUZUKI LLC: Super (Blue)”, follow the schedule of “SUZUKI LLC: Standard (Green)”. To see the detail of the maintenance schedule, refer to “Maintenance schedule” in this section.

This type of coolant is the best for cooling system for the following reasons:
- The coolant helps maintain proper engine temperature.
- It gives proper protection against freezing and boiling.
- It gives proper protection against corrosion and rust.

Failure to use the proper coolant can damage your cooling system. Your authorized SUZUKI dealer can help you select the proper coolant.

NOTICE

To avoid damaging your cooling system:
- **Always use a high quality ethylene glycol base non-silicate type coolant diluted with distilled water at the correct mixture concentration.**
- **Check that the proper mix is 50/50 coolant to distilled water and in no case higher than 70/30. Concentrations greater than 70/30 coolant to distilled water will cause overheating conditions.**
- **Do not use straight coolant nor plain water (except “SUZUKI LLC: Super (Blue)”).**
- **Do not add extra inhibitors or additives. They may not be compatible with your cooling system.**
- **Do not mix different types of base coolants. Doing so may result in accelerated seal wear and/or the possibility of severe overheating and extensive engine damage.**

Coolant level check

Check the coolant level at the reservoir tank, not at the radiator. With the engine cool, the coolant level should be between “FULL” and “LOW” marks.

Adding coolant

⚠ WARNING

Engine coolant is harmful or fatal if swallowed or inhaled. Do not drink antifreeze or coolant solution. If swallowed, do not induce vomiting. Immediately contact a poison control center or a physician. Avoid inhaling mist or hot vapors; if inhaled, exhale and move to where there is fresh air. If coolant gets in eyes, flush eyes with water and seek medical attention. Wash thoroughly after handling. Solution can be poisonous to animals. Keep out of the reach of children and animals.

NOTICE

“SUZUKI LLC: Super (Blue) coolant”; This coolant is already diluted to the proper percentage. Do not dilute with distilled water additionally. Doing so may result in the possibility of freezing and/or overheating coolant.

NOTICE

“SUZUKI LLC: Standard (Green) coolant”;

- **The mixture you use should contain 50% concentration of antifreeze.**
- **If the lowest ambient temperature in your area is expected to be –35°C (–31°F) or below, use higher concentrations up to 60% following the instructions on the antifreeze container.**

(For gasoline engine model)

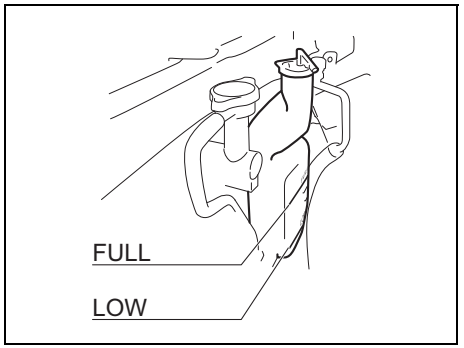

61MM2A001

If the coolant level is below “LOW” mark, more coolant should be added. Remove the reservoir tank cap and add coolant until the reservoir tank level reaches “FULL” mark. Never fill the reservoir tank above “FULL” mark.

NOTICE

When putting the cap on the reservoir tank, line up the mark on the cap and the mark on the tank. Failure to follow this can result in coolant leakage.

(For diesel engine model)

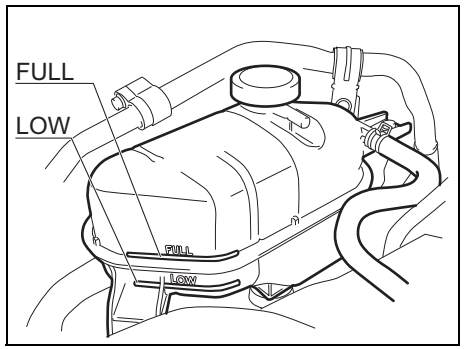

61MM0A125

⚠ WARNING

It is hazardous to remove the reservoir tank cap (degassing tank cap) for a diesel engine when the water temperature is high, because scalding fluid and steam may be blown out under pressure. Wait until the coolant temperature has lowered before removing the cap.

If the coolant level is below “LOW” mark, more coolant should be added. When the engine is cool, remove the degassing tank cap by turning it counterclockwise slowly to release any pressure. And add coolant until the degassing tank level reaches “FULL” mark. Never fill the degassing tank above “FULL” mark.

Coolant replacement

Since special procedures are required, ask your authorized SUZUKI dealer for this job.

Air cleaner

If the air cleaner is clogged with dust, there will be greater intake resistance, resulting in decreased power output and increased fuel consumption.

(For gasoline engine model)

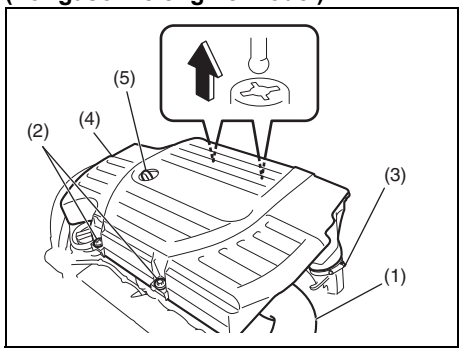

61MM0B063

1) Remove the air cleaner inlet hose (1).
2) Remove the bolts (2), loosen the bolt (3) and lift the air cleaner case (4) directly above.

NOTICE

When lifting the air cleaner, check that the air cleaner does not interfere with the engine oil dipstick (5) to avoid damage the dipstick.

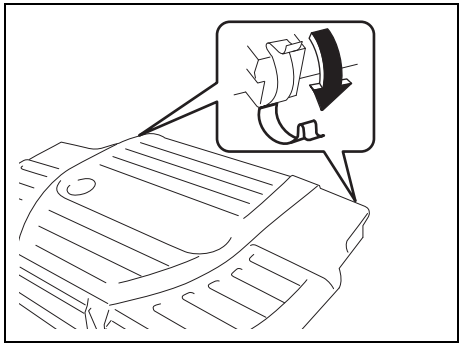

61MM0B064

3) Unclamp the side clamps, and remove the element from the air cleaner case. If it appears to be dirty, replace it with a new one.
4) Clamp the side clamps or tighten the bolts securely.

(For diesel engine model)

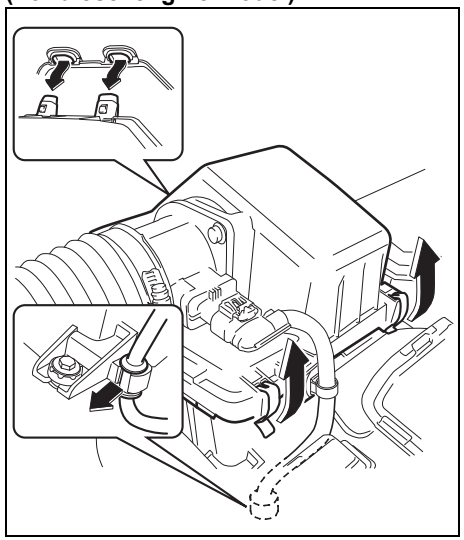

61MM0A126

1) Unclamp the side clamps and remove the element from the air cleaner case. If it appears to be dirty, replace it with a new one.
2) Clamp the side clamps securely.

Spark plugs

Spark plug replacement and inspection

(For gasoline engine model)

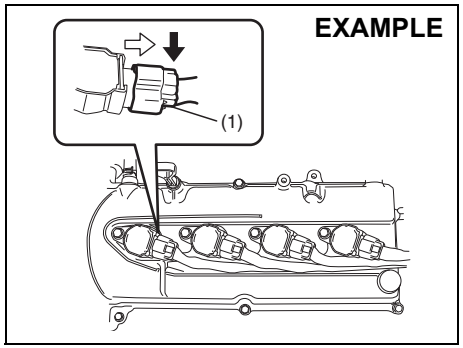

80JM125

To access the spark plug:
1) Remove the air cleaner case. Refer to “Air cleaner” in this section.
2) If necessary, disconnect the coupler (1) while pushing the release lever.
3) Remove the bolts.
4) Pull out the ignition coils straight.

NOTE:
During installation, check that the wires, couplers, sealing rubber of air cleaner chassis and washers, are correctly returned in place.

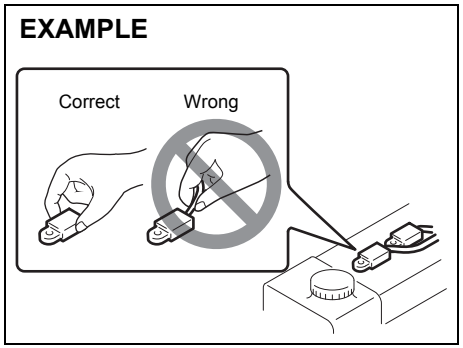

78K179

NOTICE

- **When pulling out the ignition coils, do not pull on the cable. Pulling on the cable can damage it.**
- **When servicing the iridium/platinum spark plugs (slender center electrode type plugs), do not touch the center electrode, as it is easy to be damaged.**

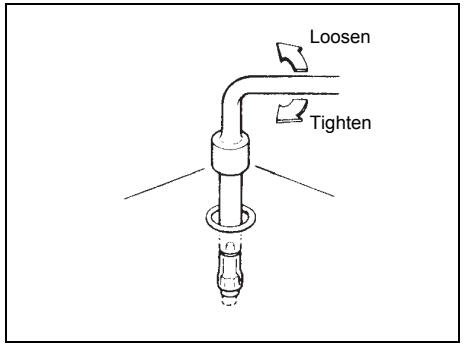

60G160

NOTICE

- **When installing the spark plugs, screw them in with your fingers to avoid stripping the threads. Tighten the spark plugs with a torque wrench to 25 Nm (2.5 kg-m, 18.4 lb-ft). Do not allow contaminants to enter the engine through the spark plug holes when the plugs are removed.**
- **Never use spark plugs with the wrong thread size.**

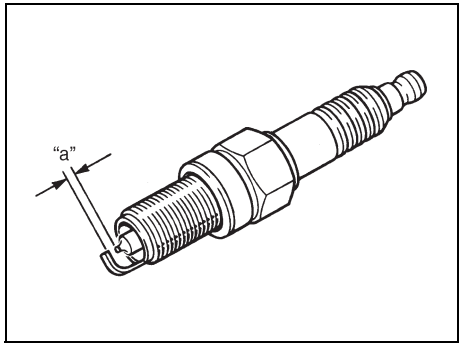

54G106

Spark plug gap "a"
K16HPR-U11/SILFR6A11
1.0 – 1.1 mm (0.039 – 0.043 in.)

NOTICE

When replacing spark plugs, you should use the brand and type specified for your vehicle. For the specified plugs, refer to "SPECIFICATIONS" section in the end of this book. If you wish to use a brand of spark plug other than the specified plugs, consult your SUZUKI dealer.

Gear oil

Manual transaxle oil / transfer oil (4WD) / rear differential oil (4WD)

When adding gear oil, use gear oil with the appropriate viscosity and grade as shown in the chart below.

We highly recommend you use "SUZUKI GEAR OIL 75W-80" for manual transaxle oil.

Manual transaxle oil

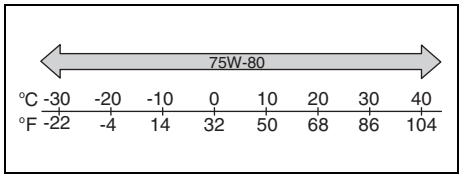

68LM728

We highly recommend you use “SUZUKI GEAR OIL 75W-85” for transfer oil (4WD) and rear differential oil (4WD).

Transfer oil (4WD)
Rear differential oil (4WD)

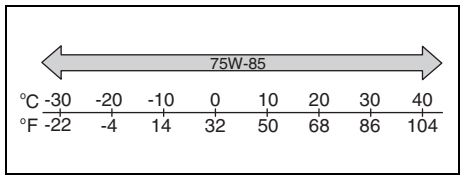

71LMT0701

Gear oil level check

5-speed manual transaxle

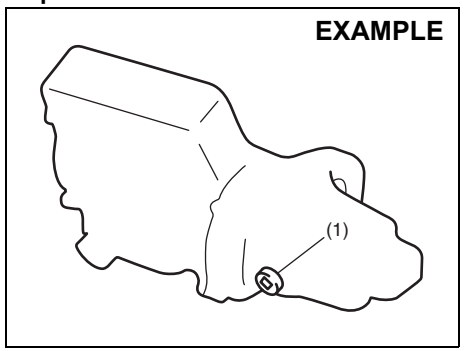

52LM021

(1) Oil filler and level plug

6-speed manual transaxle

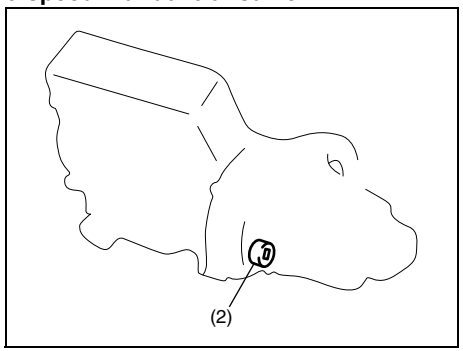

71LS10701

(2) Oil filler and level plug

Transfer (4WD)

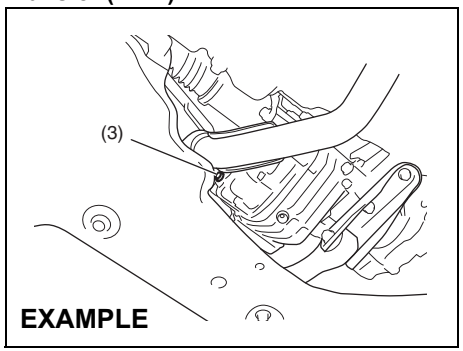

61MM0B065

(3) Oil filler and level plug

Rear differential (4WD)

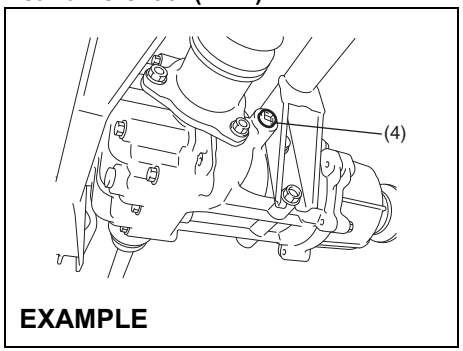

61MM0B066

(4) Oil filler and level plug

To check the gear oil level, use the following procedure:

1) Park the vehicle on a level surface with the parking brake applied. Then, stop the engine.
2) Remove the oil filler and level plug.

For the manual transaxle;

3) If gear oil flows from the plug hole, the oil level is correct. Reinstall the plug. If gear oil does not flow from the plug hole, add oil through the filler plug hole until oil flows a little from the plug hole.

For the transfer and rear differential;

3) Check the inside of the hole with your finger. If the oil level comes up to the bottom of the plug hole, the oil level is correct. If so, reinstall the plug.
4) If the oil level is low, add gear oil through the oil filler and level plug hole until the oil level reaches the bottom of the filler hole, and then reinstall the plug.

Tightening torque for oil filler and level plug

Manual transaxle (1) or (2):
21 Nm (2.1 kg-m, 15.5 lb-ft)

Transfer (3) / Rear differential (4):
23 Nm (2.3 kg-m, 17.0 lb-ft)

⚠ CAUTION

After driving the vehicle, the gear oil temperature may be high enough to burn you. Wait until the oil filler and level plug are cool enough to touch with your bare hands before inspecting gear oil level.

NOTICE

When tightening the plug, apply the following sealing compound or equivalent to the plug threads to prevent oil leakage.

SUZUKI Bond No. "1217G"

Gear oil change

Since special procedures, materials and tools are required, ask your authorized SUZUKI dealer for this job.

Clutch pedal

Fluid control clutch

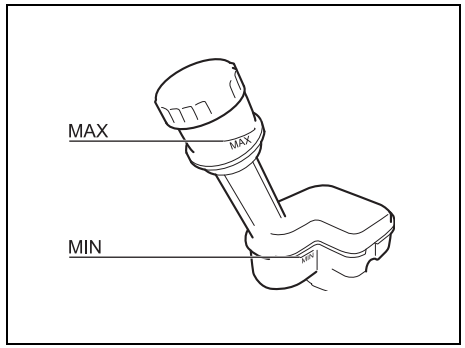

61MM0B067

Check the clutch pedal for smooth operation and clutch fluid level from time to time. If clutch dragging is felt with the pedal fully depressed, have the clutch inspected by your SUZUKI dealer. If the clutch fluid level is near "MIN" line, fill it up to "MAX" line with SAE J1704 or DOT4 brake fluid.

Fuel filter (diesel engine)

If the fuel filter warning light comes on when driving, there is a possibility that water is in the fuel filter. Drain water as soon as possible. Have your vehicle inspected by an authorized SUZUKI dealer.

Brakes

Brake fluid

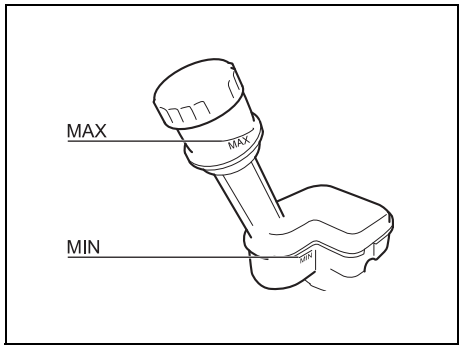

61MM0B067

Check the brake fluid level by looking at the reservoir in the engine compartment. Check that the fluid level is between “MAX” and “MIN” lines. If the brake fluid level is near “MIN” line, fill it up to “MAX” line with SAE J1704 or DOT4 brake fluid.

⚠ WARNING

Failure to follow the guidelines below can result in personal injury or serious damage to the brake system.

- **If the brake fluid in the reservoir drops below a certain level, the brake warning light on the instrument cluster will come on (the engine must be running with the parking brake fully disengaged). Should the light come on, immediately ask your SUZUKI dealer to inspect the brake system.**
- **A rapid fluid loss indicates leakage in the brake system which should be inspected by your SUZUKI dealer immediately.**
- **Do not use any fluid other than SAE J1704 or DOT4 brake fluid. Do not use reclaimed fluid or fluid that has been stored in old or open containers. It is essential that foreign particles and other liquids are kept out of the brake fluid reservoir.**

⚠ CAUTION

Brake fluid can harm your eyes and damage painted surfaces. Be careful when refilling the reservoir.

⚠ WARNING

Brake fluid is harmful or fatal if swallowed, and harmful if it comes in contact with skin or eyes. If swallowed, do not induce vomiting. Immediately contact a poison control center or a physician. If brake fluid gets in eyes, flush eyes with water and seek medical attention. Wash thoroughly after handling. Solution can be poisonous to animals. Keep out of reach of children and animals.

NOTE:
With disc brakes, the fluid level can be expected to gradually fall as the brake pads wear.

Brake pedal

Check brake pedal stroke. If the stroke is so large, have the brake system inspected by your SUZUKI dealer. If you doubt the brake pedal is at its normal height, check it as follows:

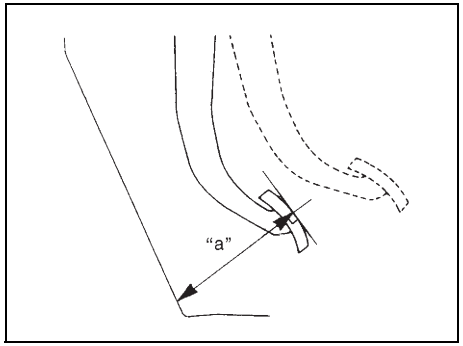

54G108

Minimum distance between brake pedal and floor carpet "a": 59 mm (2.3 in.)

With the engine running, measure the distance between the brake pedal and floor carpet when the pedal is depressed with approximately 30 kg (66 lbs) of force. The minimum distance required is as specified. Since your vehicle's brake system is self-adjusting, there is no need for pedal adjustment.
If the pedal to floor carpet distance as measured above is less than the minimum distance required, have your vehicle inspected by your SUZUKI dealer.

NOTE:
When measuring the distance between the brake pedal and floor wall, be sure not to include the floor mat or rubber on the floor wall in your measurement.

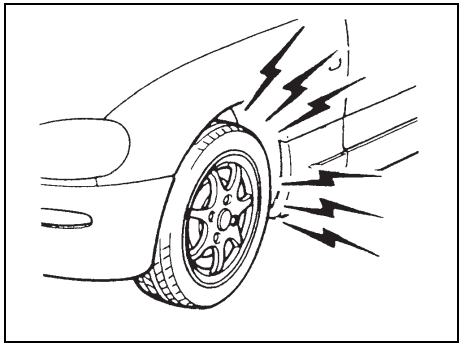

60G104S

⚠ WARNING

If you experience any of the following problems with your vehicle's brake system, have the vehicle inspected immediately by your SUZUKI dealer.
- **Poor braking performance**
- **Uneven braking (brakes not working uniformly on all wheels.)**
- **Excessive pedal travel**
- **Brake dragging**
- **Excessive noise**

Parking brake

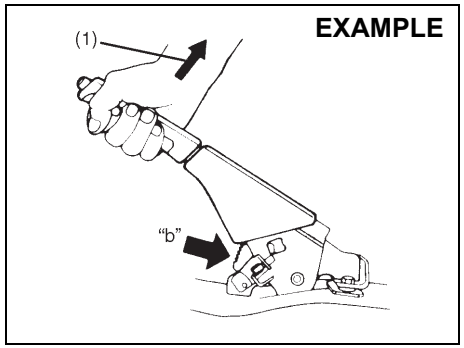

54G109

Ratchet tooth specification "b":
4th – 9th
Lever pull force (1):
200 N (20 kg, 45 lbs)

Check the parking brake for proper adjustment by counting the number of clicks made by the ratchet teeth as you slowly pull up on the parking brake lever to the point of full engagement. The parking brake lever should stop between the specified ratchet teeth and the rear wheels should be securely locked. If the parking brake is not properly adjusted or the brakes drag after the lever has been fully released, have the parking brake inspected and/or adjusted by your SUZUKI dealer.

Brake discs

Brake location	Minimum thickness
Front wheels	20.0 mm (0.8 in.)
Rear wheels	8.0 mm (0.3 in.)

If the measured thickness or inner diameter of the most worn part exceeds the value indicated above, the parts should be replaced with a new one. The measurement involves disassembling each brake and requires the use of a micrometer, which must be done according to the instructions described in the relevant service manual or available from the relevant repair information site.

Steering

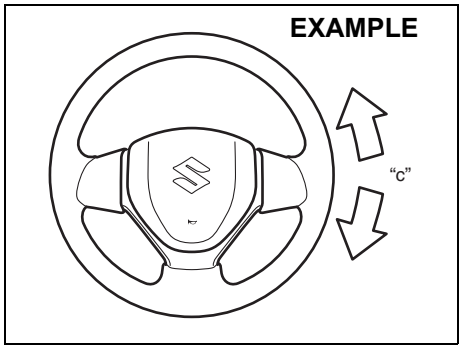

68LM708

Steering wheel play "c":
0 – 30 mm (0.0 – 1.2 in.)

Check the play of the steering wheel by gently turning it from left to right and measuring the distance that it moves before you feel slight resistance. The play should be between the specified values.

Check that the steering wheel turns easily and smoothly without rattling by turning it all the way to the right and to the left while driving very slowly in an open area. If the amount of free play is not as specified or you find anything else to be wrong, an inspection must be performed by your SUZUKI dealer.

Tires

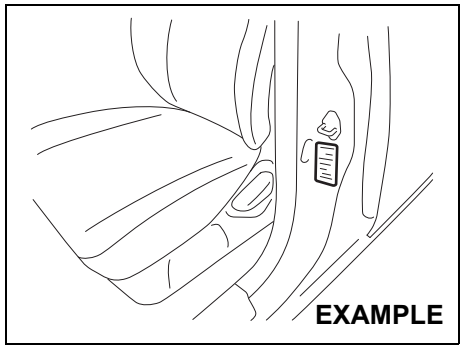

80JS025

The front and rear tire pressure specifications are listed on the tire information label. Both front and rear tires should have the specified tire pressure.
Note that the value does not apply to the compact spare tire, if equipped.

NOTE:
The tire inflation pressure will change due to changes in atmospheric pressure, temperature or tire temperature when driving. To reduce the chance that the low tire pressure warning light (if equipped) will come on due to normal changes in temperature and atmospheric pressure, it is important to check and adjust the tire pressures when the tires are cold. If you check tires after driving, they are warm. Even if the tire pressure seems to be good in this condition, it could fall below the specified pressure when tires cool down. Also, tires that are inflated to the specified pressure in a warm garage may have pressure below the specification when the vehicle is driven outside in very cold temperature. If you adjust the tire pressure in a garage that is warmer than the outside temperature, you should add 1 kPa to the recommended cold tire inflation pressure for every 0.8°C difference between garage temperature and outside temperature.

Tire inspection

Inspect your vehicle's tires at least once a month by performing the following checks:

1) Measure the air pressure with a tire gauge. Adjust the pressure if necessary. Remember to check the spare tire, too.

⚠ WARNING

- **Air pressures should be checked when the tires are cold or you may get inaccurate readings.**
- **Check the inflation pressure from time to time while inflating the tire gradually, until the specified pressure is obtained.**
- **Never under-inflate or over-inflate the tires.**
  Under-inflation can cause unusual handling characteristics or can cause the rim to slip on the tire bead, resulting in an accident or damage to the tire or rim.
  Over-inflation can cause the tire to burst, resulting in personal injury. Over-inflation can also cause unusual handling characteristics which may result in an accident.

EXAMPLE

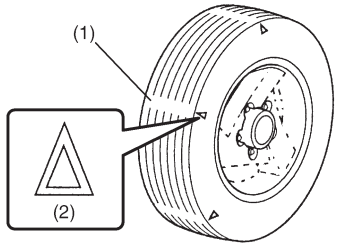

54G136

(1) Tread wear indicator
(2) Indicator location mark

2) Check that the depth of the tread groove is more than 1.6 mm (0.06 in.). To help you check this, the tires have molded-in tread wear indicators in the grooves. When the indicators appear on the tread surface, the remaining depth of the tread is 1.6 mm (0.06 in.) or less and the tire should be replaced.
3) Check for abnormal wear, cracks and damage. Any tires with cracks or other damage should be replaced. If any tires show abnormal wear, have them inspected by your SUZUKI dealer.

⚠ CAUTION

Hitting curbs and running over rocks can damage tires and affect wheel alignment. Have tires and wheel alignment checked periodically by your SUZUKI dealer.

4) Check for loose wheel bolts.
5) Check that there are no nails, stones or other objects sticking into the tires.

⚠ WARNING

- **Your SUZUKI vehicle is equipped with tires which are all the same type and size. This is important to ensure proper steering and handling of the vehicle. Never mix tires of different size or type on the four wheels of your vehicle. The size and type of tires used should be only those approved by SUZUKI as standard or optional equipment for your vehicle.**
- **Replacing the wheels and tires equipped on your vehicle with certain combinations of aftermarket wheels and tires can significantly change the steering and handling characteristics of your vehicle.**
- **Therefore, use only those wheel and tire combinations approved by SUZUKI as standard or optional equipment for your vehicle.**

NOTICE

Replacing the original tires with tires of a different size may result in false speedometer or odometer readings. Check with your SUZUKI dealer before purchasing replacement tires that differ in size from the original tires.

NOTICE

For 4WD models, replacing a tire with one of a different size, or using different brands among the four tires can result in damage to the drive train.

Tire rotation

4-tire rotation

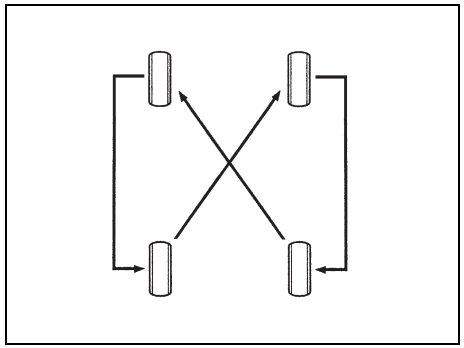

54G114

To avoid uneven wear of your tires and to prolong their life, rotate the tires as illustrated. Tires should be rotated every 10000 km (6000 miles). After rotation, adjust front and rear tire pressures to the specification listed on your vehicle's tire information label.

NOTE:
(For Mexico)
For additional instruction, refer to "SUPPLEMENT" section in the end of this book.

Compact spare tire (if equipped)

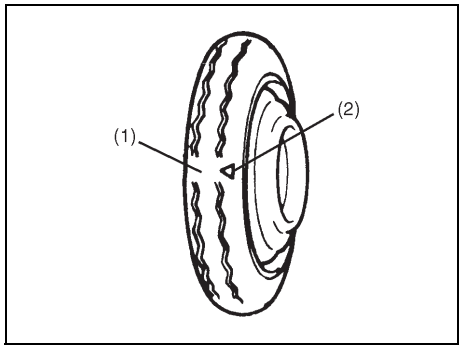

54G115

(1) Wear indicator
(2) Indicator location mark

Your vehicle comes equipped with a compact spare tire. It is designed to save space in your storage area, and its lighter weight facilitates installing the spare tire when getting a flat tire. It is only intended for temporary emergency use, until the conventional tire can be repaired or replaced. The inflation pressure of the compact spare tire should be checked at least once a month. Use a quality pocket-type inflation pressure gauge and set at 420 kPa (60 psi). At the same time, check that the tire is stored securely. If it is not, tighten it.

Note that two or more compact spare tires should not be used on one vehicle simultaneously.

⚠ WARNING

The compact spare tire and wheel are intended for temporary emergency use only. Continuous use of this spare can result in tire failure and loss of control. Always observe these precautions when using this spare:

- **Your vehicle should be handled in a different way when using this spare.**
- **Do not exceed 80 km/h (50 mph).**
- **Replace this spare with a standard tire and wheel as soon as possible.**
- **Use of this spare will reduce ground clearance.**
- **Recommended air pressure for this spare is 420 kPa (60 psi).**
- **Do not use tire chains on the compact spare. If you must use tire chains, rearrange the wheels so standard tires and wheels are fitted to the front axle.**
- **The compact spare tire has a much shorter tread life than the conventional tires on your vehicle. Replace the tire as soon as the tread wear indicator appears.**
- **When replacing the compact spare tire, use a replacement tire with the exact same size and construction.**

Battery

⚠ WARNING

- **Batteries produce flammable hydrogen gas. Keep flames and sparks away from the battery or an explosion may occur. Never smoke when working near the battery.**
- **When checking or servicing the battery, disconnect the negative cable. Be careful not to cause a short circuit by allowing metal objects to contact the battery posts and the vehicle at the same time.**
- **To avoid harm to yourself or damage to your vehicle or battery, follow the jump-starting instructions in "EMERGENCY SERVICE" section if it is necessary to jump-start your vehicle.**
- **Diluted sulfuric acid spilled from battery can cause blindness or severe burns. Use proper eye protection and gloves. Flush eyes or body with ample water and get medical care immediately if suffered. Keep batteries out of reach of children.**

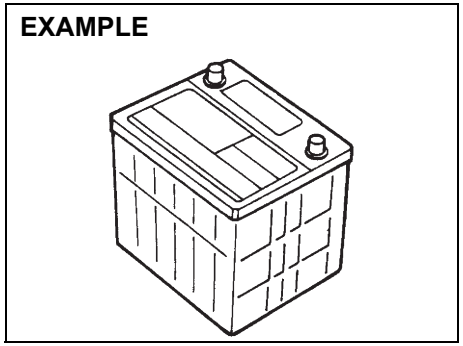

52KM160

Your vehicle is equipped with a battery that requires infrequent maintenance. You will never have to add water. You should, however, periodically check the battery, battery terminals and battery hold-down bracket for corrosion. Remove corrosion using a stiff brush and ammonia mixed with water, or baking soda mixed with water. After removing corrosion, rinse with clean water.

If your vehicle is not going to be driven for a month or longer, disconnect the cable from the negative terminal of the battery to help prevent discharge.

Battery replacement

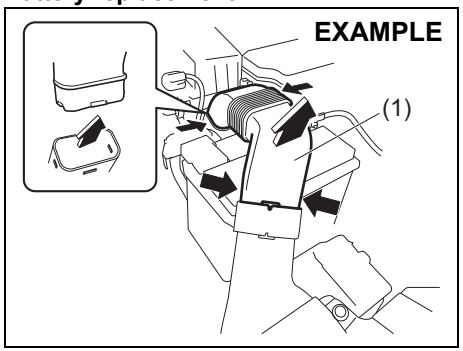

54P000704

NOTE:
(For diesel engine model)
To approach the battery, push the locks and remove the suction pipe (1).

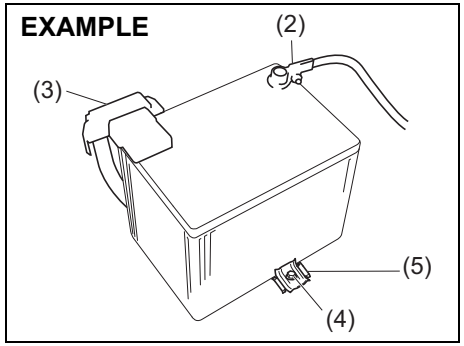

54P000705

To remove the battery:
1) Disconnect the negative cable (2).
2) Disconnect the positive cable (3).
3) Remove the bracket bolt (4) and remove the bracket (5).
4) Remove the battery.

To install the battery:
1) Install the battery in the reverse order of removal.
2) Tighten the bracket bolt and battery cables securely.

NOTE:
When the battery is disconnected, some of the vehicle's functions will be initialized and/or deactivated.
These functions must be required to reset after the battery is reconnected.

⚠ WARNING

Batteries contain toxic substances including sulfuric acid and lead. They could have potential negative consequences for the environment and human health. Used batteries must be disposed of or recycled according to applicable rules or regulations and must not be disposed of with ordinary household trash. Make sure not to tip over the battery when you remove it from the vehicle. Otherwise, sulfuric acid could run out and you might get injury.

(Battery label)

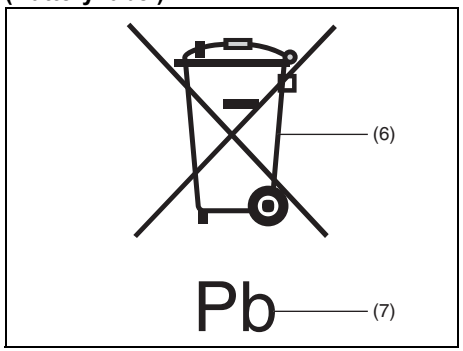

54P000733

(6) Crossed-out wheeled bin symbol
(7) Chemical symbol of "Pb"

The crossed-out wheeled bin symbol (5) located on the battery label indicates that the used battery should be collected separately from ordinary household trash.
The chemical symbol of "Pb" (6) indicates the battery contains more than 0.004% lead.

By ensuring the used battery is disposed of or recycled correctly, you will help prevent potential negative consequences for the environment and human health, which could otherwise be caused by inappropriate trash handling of the battery. The recycling of materials will help to conserve natural resources. For more detailed information about disposing of or recycling the used battery, consult your SUZUKI dealer.

Fuses

Your vehicle has three types of fuses, as described below:

Main fuse
The main fuse takes current directly from the battery.

Primary fuses
These fuses are between the main fuse and individual fuses, and are for electrical load groups.

Individual fuses
These fuses are for individual electrical circuits.

To remove a fuse, use the fuse puller provided in the fuse box.

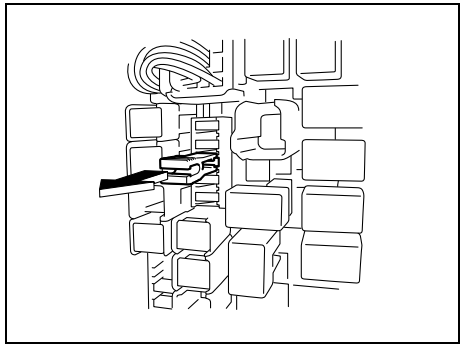

63J095

Fuses in engine compartment

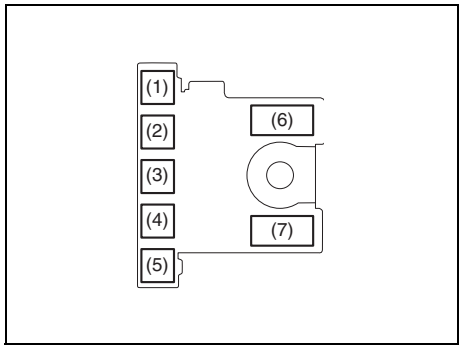

61MM0B068

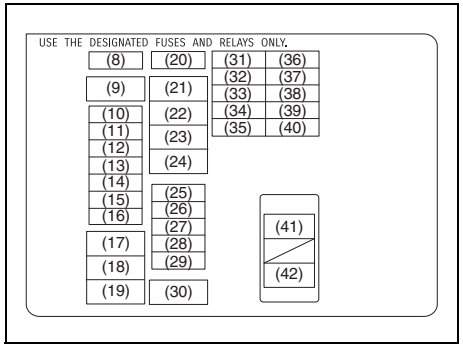

54P000706

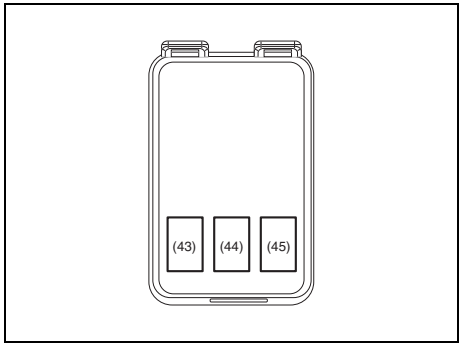

54P000707

MAIN FUSE / PRIMARY FUSE		
(1)	50 A	FL7 (GAS)
	60 A	FL7 (DIESEL)
(2)	50 A	FL6 (GAS)
	80 A	FL6 (DIESEL)
(3)	100 A	FL5
(4)	80 A	FL4
(5)	100 A	FL3
(6)	60 A	FL2 (GAS)
	100 A	FL2 (DIESEL)
(7)	100 A	FL1 (GAS)
	120 A	FL1 (DIESEL)
(8)	7.5 A	Ignition-1 signal 2

(9)	30 A	Radiator fan 2
(10)	20 A	Front fog light
(11)	7.5 A	Headlight 2
(12)	25 A	Headlight 3
(13)	25 A	ESP® control module
(14)	25 A	Headlight
(15)	30 A	Back up
(16)	30 A	DCDC 2
(17)	40 A	Ignition switch
(18)	40 A	ESP® motor
(19)	30 A	Starting motor
(20)	7.5 A	Transaxle 3
(21)	30 A	Fuel heater
(22)	30 A	Radiator fan
(23)	30 A	Transaxle 2
(24)	40 A	HY pump
(25)	30 A	DCDC
(26)	30 A	FI main (DIESEL)
(27)	20 A	FI (GAS)
		Fuel pump (DIESEL)
(28)	10 A	Air compressor
(29)	15 A	Transaxle 1
(30)	30 A	Blower fan

(31)	15 A	Transaxle 4
(32)	15 A	Transaxle 5
(33)	7.5 A	Starting signal
(34)	15 A	Headlight (Left)
(35)	15 A	Headlight high (Left)
(36)	7.5 A	FI 2 (DIESEL)
(37)	20 A	INJ DRV
(38)	15 A	FI
(39)	15 A	Headlight (Right)
(40)	15 A	Headlight high (Right)
(41)	50 A	Ignition switch 2 (DIESEL)
(42)	50 A	Battery (DIESEL)
(43)	40 A	Sub heater (DIESEL)
(44)	40 A	Sub heater 3 (DIESEL)
(45)	40 A	Sub heater 2 (DIESEL)

The main fuse, primary fuses and some of the individual fuses are located in the engine compartment. If the main fuse blows, no electrical component will function. If a primary fuse blows, no electrical component in the corresponding load group will function. When replacing the main fuse, a primary fuse or an individual fuse, use a genuine SUZUKI replacement.

To remove a fuse, use the fuse puller provided in the fuse box. The amperage of each fuse is shown in the back of the fuse box cover.

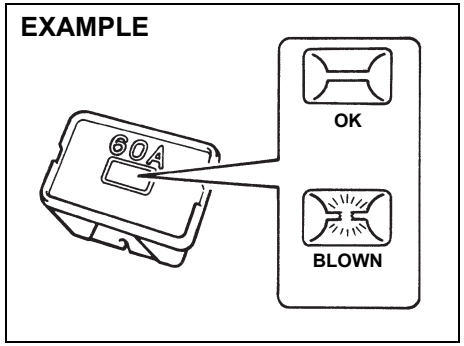

60G111

⚠ WARNING

If the main fuse or a primary fuse blows, have your vehicle inspected by an authorized SUZUKI dealer. Always use a genuine SUZUKI replacement. Never use a substitute such as a wire even for a temporary repair, or extensive electrical damage and a fire can result.

NOTE:
Check that the fuse box always carries spare fuses.

Fuses under dashboard

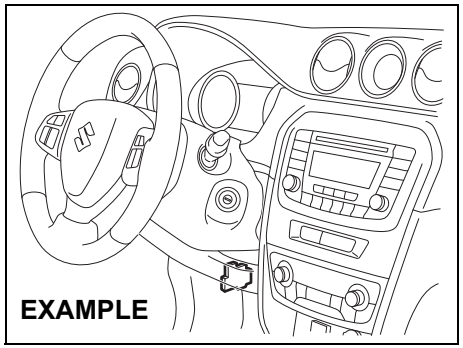

54P000708

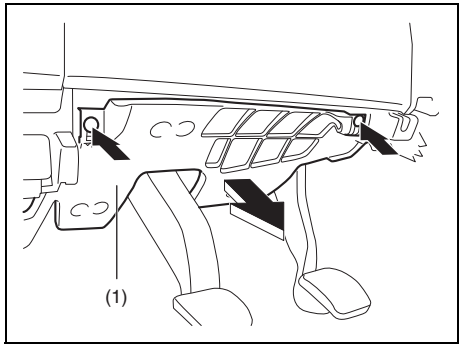

61MM0B071

NOTE:
To approach the fuses, remove the screws and remove the cover (1).

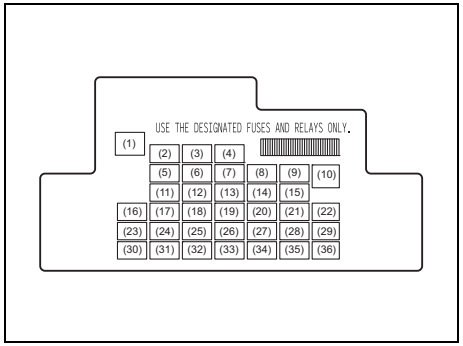

68LM701

PRIMARY FUSE		
(1)	30 A	Seat belt
(2)	20 A	Power window timer
(3)	15 A	Steering lock
(4)	20 A	Rear defogger
(5)	20 A	Sunroof
(6)	10 A	DRL
(7)	10 A	Heated mirror
(8)	7.5 A	Starting signal
(9)	15 A	Accessory socket 2
(10)	30 A	Power window
(11)	10 A	Hazard

(12)	7.5 A	BCM
(13)	15 A	Ignition coil
(14)	10 A	ABS control module
(15)	15 A	Accessory socket
(16)	10 A	A-STOP controller
(17)	15 A	Horn
(18)	10 A	Stop light
(19)	10 A	Air bag
(20)	10 A	Back-up light
(21)	15 A	Wiper / Washer
(22)	30 A	Front wiper
(23)	10 A	Dome light
(24)	15 A	4WD
(25)	7.5 A	RR fog lamp
(26)	–	Blank
(27)	7.5 A	Ignition-1 signal
(28)	15 A	Radio 2
(29)	10 A	Accessory socket 3
(30)	15 A	Radio
(31)	10 A	Tail light
(32)	20 A	D/L
(33)	7.5 A	Cruise control
(34)	10 A	Meter
(35)	7.5 A	Ignition-2 signal
(36)	20 A	Seat heater

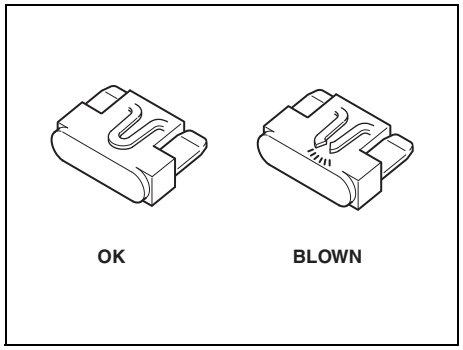

81A283

⚠ WARNING

Always replace a blown fuse with a fuse of the correct amperage. Never use a substitute such as aluminum foil or wire to replace a blown fuse. If you replace a fuse and the new one blows in a short period of time, you may have a major electrical problem. Have your vehicle inspected immediately by your SUZUKI dealer.

Headlight aiming

Since special procedures are required, ask your authorized SUZUKI dealer for this job.

Bulb replacement

⚠ CAUTION

- **Light bulbs can be hot enough to burn your finger right after turning off lights. This is true especially for halogen headlight bulbs. Replace the bulbs after they become cool enough.**
- **The headlight bulbs are filled with pressurized halogen gas. They can burst and injure you if they are hit or dropped. Handle them carefully.**
- **To avoid injury by sharp-edged parts of the body, wear gloves and a long-sleeved shirt when replacing light bulbs.**

NOTICE

The oils from your skin may cause a halogen bulb to overheat and burst when the lights are on. Grasp a new bulb with a clean cloth.

NOTICE

Frequent bulb replacement indicates the need for an inspection of the electrical system. This should be carried out by your SUZUKI dealer.

Headlights

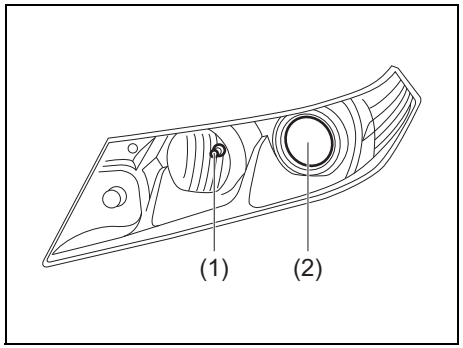

54P000709

(1) Headlight (high beam)
(2) Headlight (low beam) (if equipped)

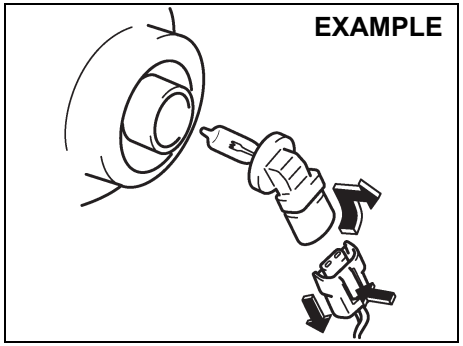

80JM071

Open the engine hood. Disconnect the coupler by pushing the lock release. Turn the bulb holder counterclockwise and remove it.

Side turn signal light (if equipped)

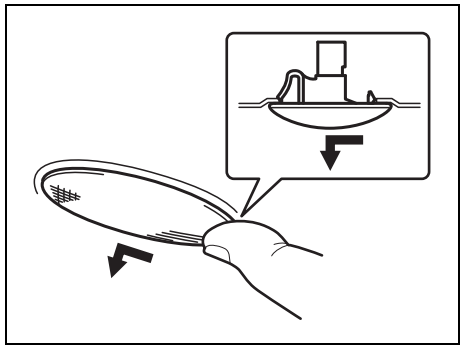

64J195

Since the bulb is built-in type, replace it as the light assembly. Remove the light assembly by sliding the light housing leftward with your finger.

Front turn signal light and front position light

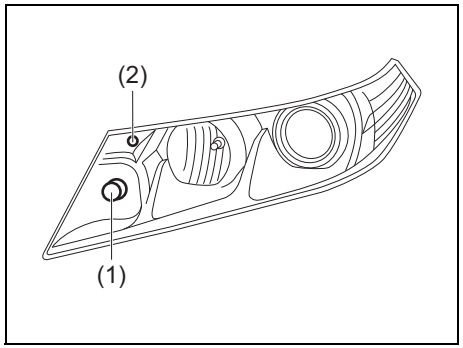

54P000710

(1) Front turn signal light
(2) Front position light

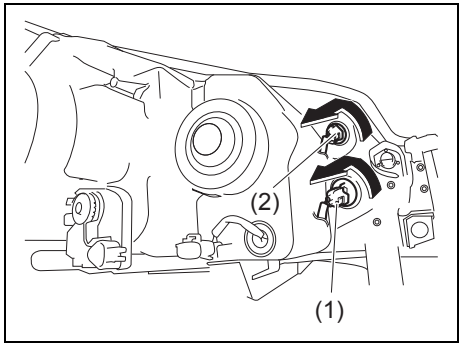

54P000711

1) Open the engine hood. To remove the bulb holder of the front turn signal light (1) or the front position light (2) from the light housing, turn the holder counterclockwise and pull it out.

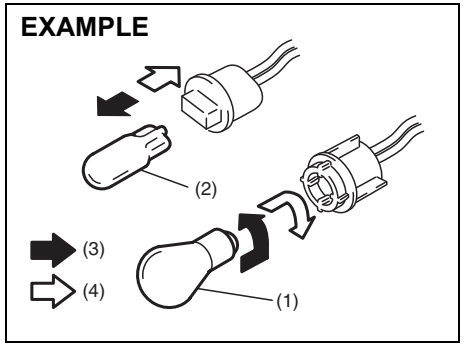

61MM0B078

(3) Removal
(4) Installation

2) To remove the bulb of the front turn signal light (1) from the bulb holder, push in the bulb and turn it counterclockwise. To install a new bulb, push it in and turn it clockwise.
   To remove and install the bulb of the front position light (2), simply pull out or push in the bulb.

Front fog light (if equipped)

1) Start the engine. Turn the steering wheel to the opposite side of the fog light to be replaced to replace the bulb easily. Then turn off the engine.

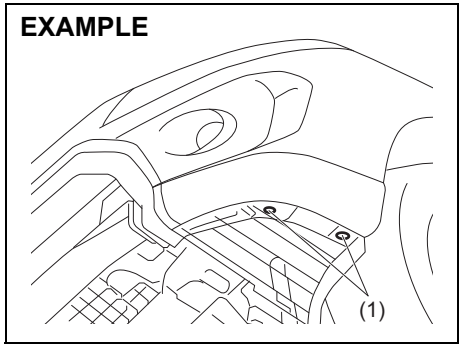

54P000732

2) Remove the screws (1).

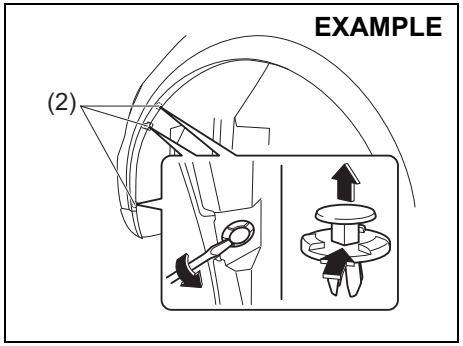

54P000712

3) Remove the clips (2) by prying them off with a flat-bladed screwdriver as shown in the illustration.

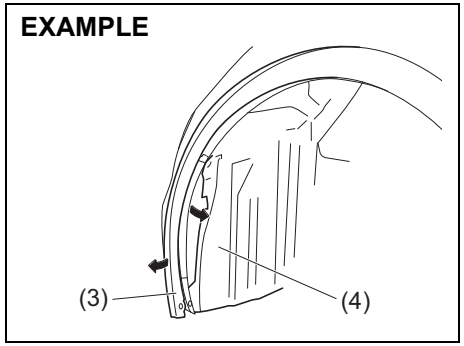

54P000713

4) Remove the end of the front fender splash guard (3), and open the end of the cover (4) inside the fender.

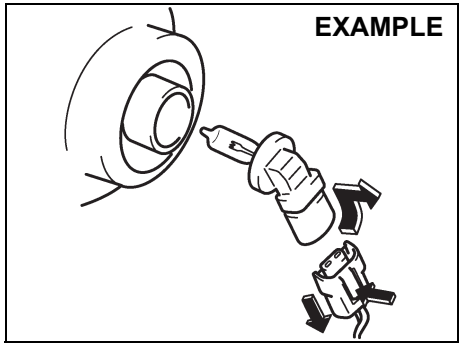

80JM071

5) Disconnect the coupler by pushing the lock release. Turn the bulb holder counterclockwise and remove it.

Daytime running light (if equipped)

Models without front fog light

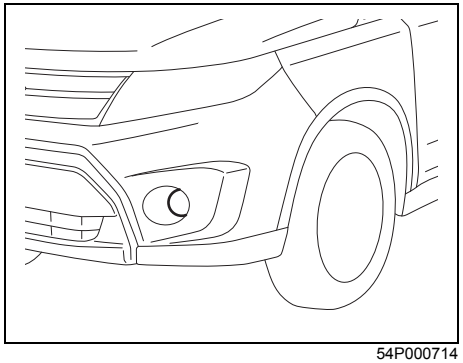

54P000714

Models with front fog light

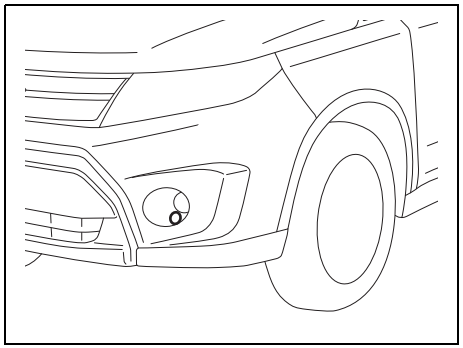

54P000715

1) Start the engine. Turn the steering wheel to the opposite side of the fog light to be replaced the bulb easily. Then turn off the engine.

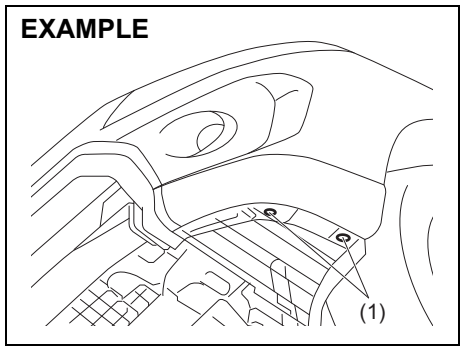

54P000732

2) Remove the screws (1).

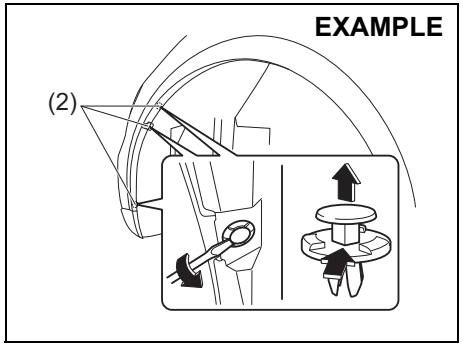

54P000712

3) Remove the clips (2) by prying them off with a flat-bladed screwdriver as shown in the illustration.

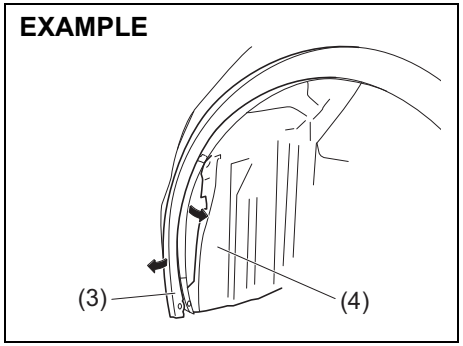

54P000713

4) Remove the end of the front fender splash guard (3), and open the end of the cover (4) inside the fender.

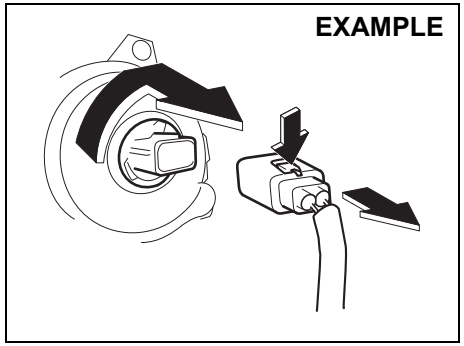

54P000716

5) Disconnect the coupler by pushing the lock release. Turn the bulb holder counterclockwise and remove it.

Rear combination light

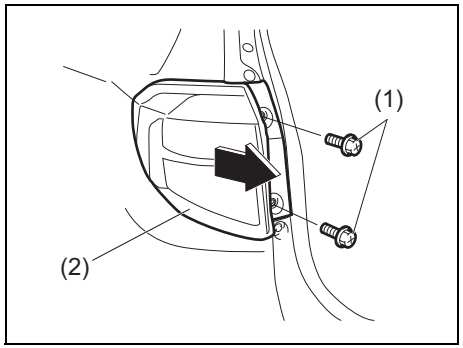

54P000718

1) Remove the bolts (1) and pull the light housing (2) straight.

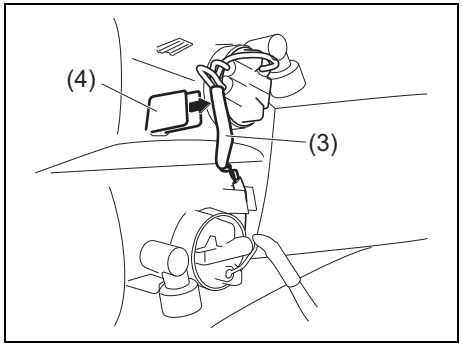

54P000719

2) Remove the wire of the rear turn signal light (3) from a clamp (4).

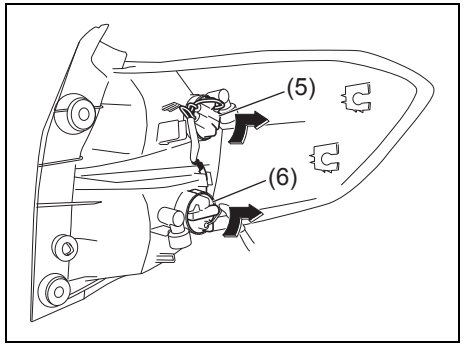

54P000720

3) To remove the bulb holder of the rear turn signal light (5) or the tail/brake light (6) from the light housing, turn the holder counterclockwise and pull it out.

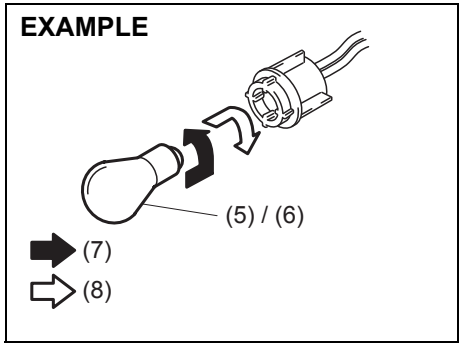

54P000721

(7) Removal
(8) Installation

4) To remove the bulb of the rear turn signal light (5) or the tail/brake light (6) from bulb holder, push in the bulb and turn it counterclockwise. To install a new bulb, push it in and turn it clockwise.

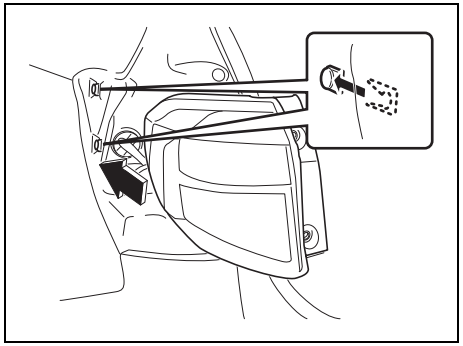

54P000722

NOTE:
When reinstalling the light housing, check that the clips are properly attached.

Reversing light

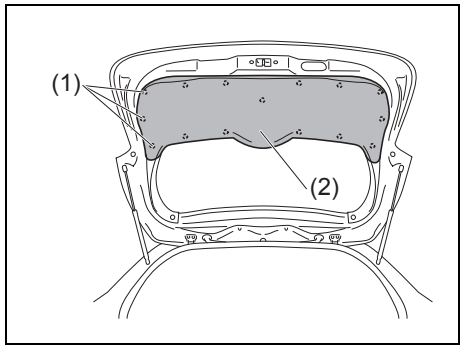

54P000723

1) Open the tailgate. Remove 15 clips (1), and then pull out the trim (2).

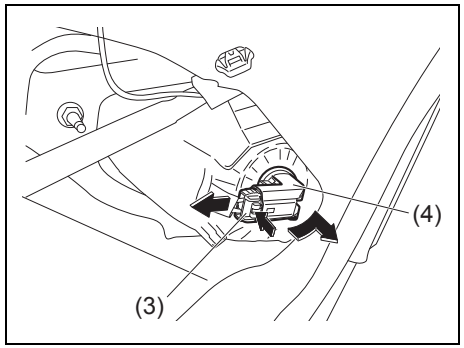

54P000724

2) Disconnect the coupler (3) by pushing the lock release. Turn the bulb holder of the reversing light (4) counterclockwise and remove it.

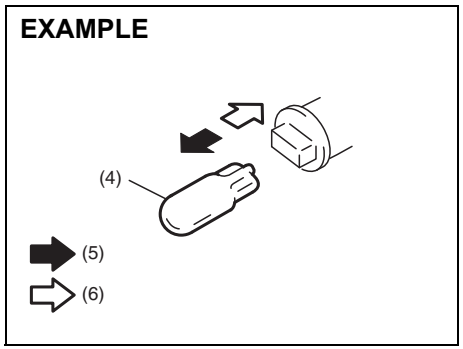

61MM0B090

(5) Removal
(6) Installation

3) To remove and install the bulb of the reversing light (4), simply pull out or push in the bulb.

License plate light

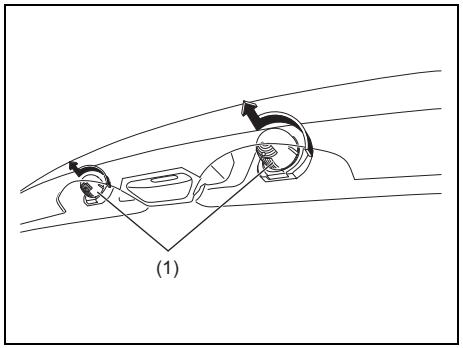

61MM0B086

1) Turn the cover (1) counterclockwise to remove it.

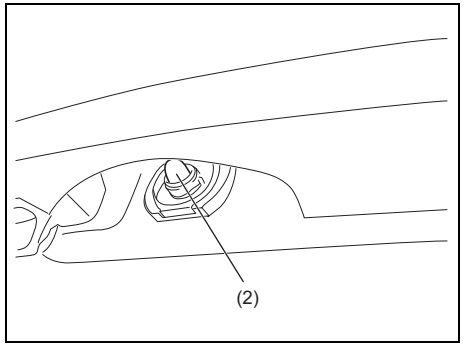

61MM0B087

2) To remove and install the bulb of the license plate light (2), simply pull out or push in the bulb.

Rear fog light (if equipped)

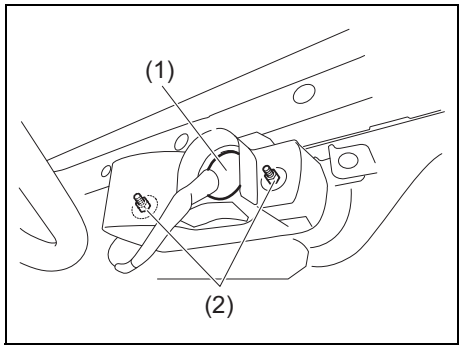

54P000725

1) Insert your hands from the back side of the rear bumper. Remove 2 nuts (2) that fix the light housing (1) in place.

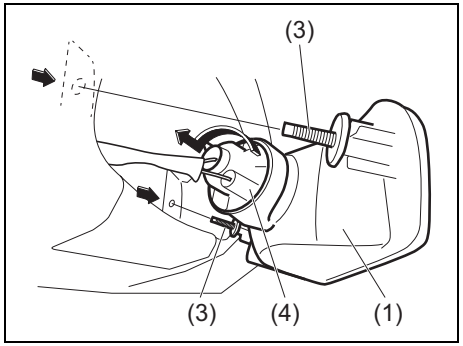

54P000726

2) Remove the light housing (1) by pushing the bolts (3). To remove the bulb holder of the rear fog light (4), turn the holder counterclockwise and pull it out.

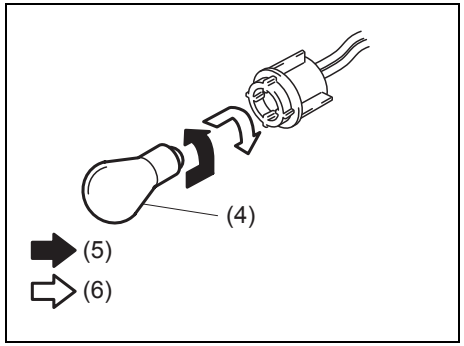

54P000727

(5) Removal
(6) Installation

3) To remove the bulb of the rear fog light (4) from bulb holder, push in the bulb and turn it counterclockwise. To install a new bulb, push it in and turn it clockwise.

Interior light

Remove the lens by using a flat-bladed screwdriver covered with a soft cloth as shown. To install it, simply push it back in.

Front (without overhead console)

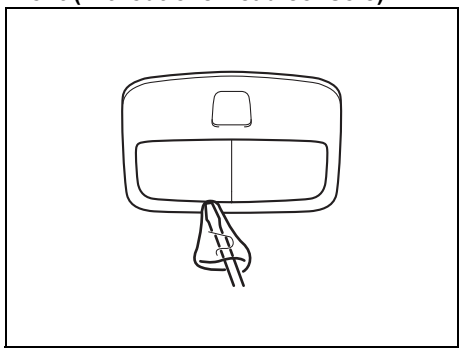

61MM0A207

Front (with overhead console)

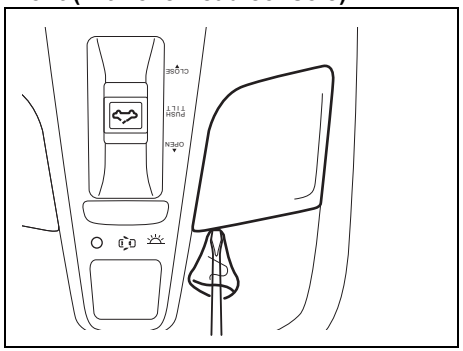

61MM0A129

Center (without sunroof)

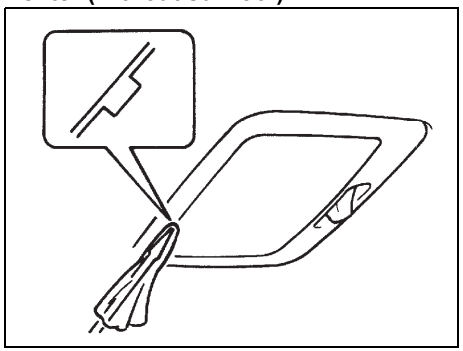

60G115

Center (with sunroof)

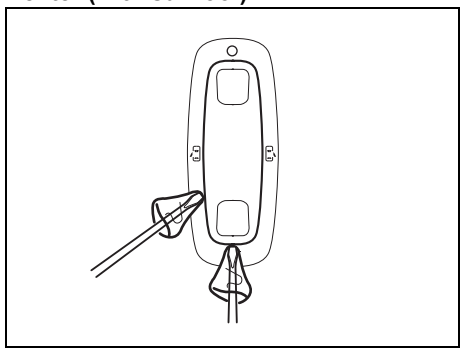

61MM0A130

Luggage compartment (if equipped)

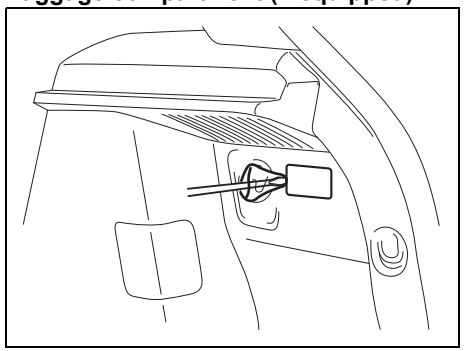

61MM0B072

Glove box light (if equipped)

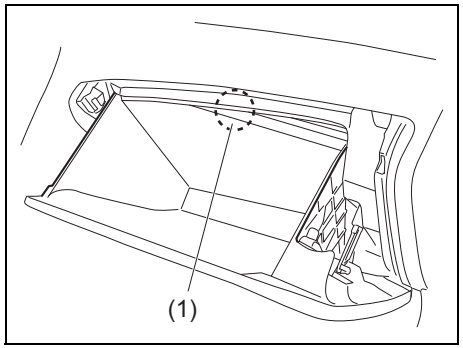

54P000728

To remove and install the bulb of the glove box light (1), simply pull out or push in the bulb.

Wiper blades

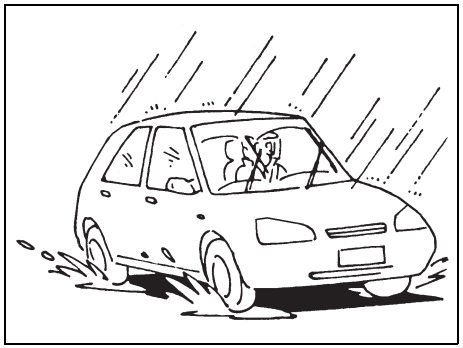

54G129

If the wiper blades become brittle or damaged, or make streaks when wiping, replace the wiper blades.

To install new wiper blades, follow the procedures below.

NOTICE
To avoid scratching or breaking the window, do not let the wiper arm strike the window while replacing the wiper blade.

NOTE:
Some wiper blades may be different from the ones described here depending on vehicle specifications. If so, consult your SUZUKI dealer for proper replacement method.

For windshield wipers:

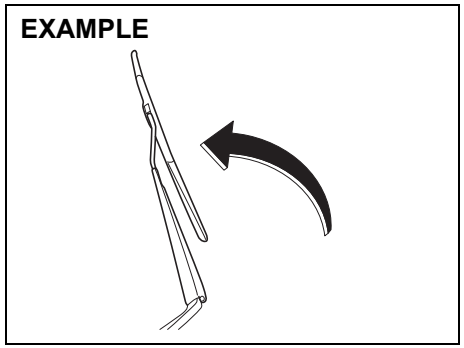

61MM0A208

1) Hold the wiper arm away from the window.

NOTE:
When raising both of the front wiper arms, pull the driver's side wiper arm up first.
When returning the wiper arms, lower the passenger's side wiper arm first.
Otherwise, the wiper arms may interfere with each other.

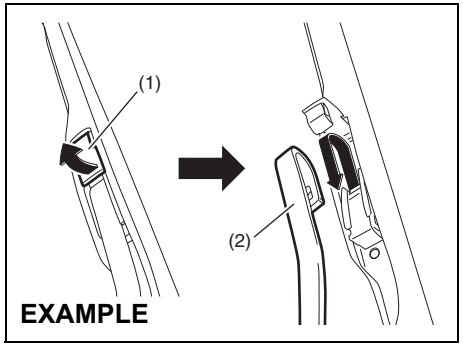

61MM0A210

2) Open the lock (1), slide the wiper frame and remove it from the arm (2) as shown.

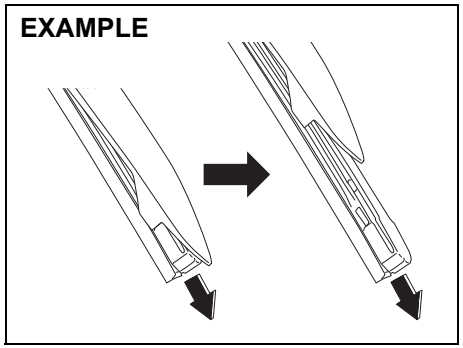

61MM0A211

3) Pull the locked end of the wiper blade firmly to unlock the blade and slide the blade out as shown.

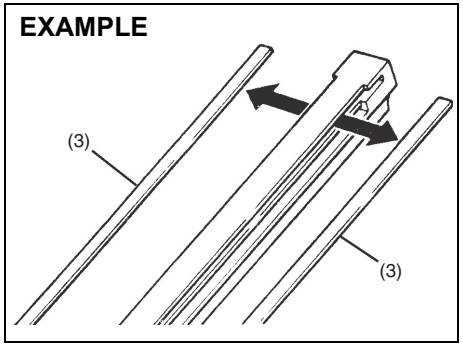

71LMT0708

(3) Retainer

4) If the new blade is provided without the two metal retainers (3), move them from the old blade to the new one.

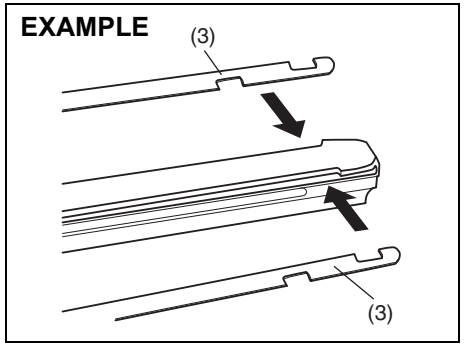

61MM0B098

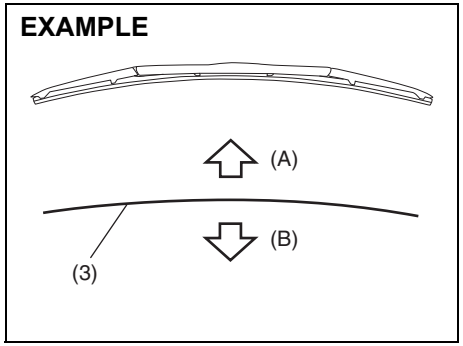

61MM0A212

(A) Up
(B) Down

NOTE:
When you install the metal retainers (3), check that the direction of metal retainers is as shown in the above illustrations.

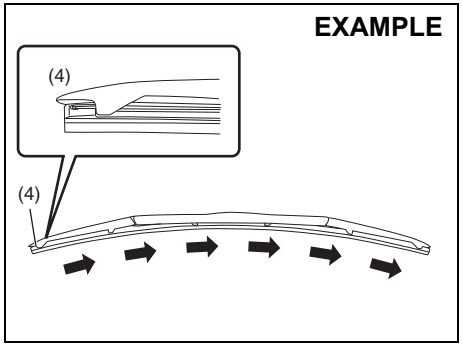

61MM0A213

(4) Locked end

5) Install the new blade in the reverse order of removal, with the locked end (4) positioned toward the wiper arm.
   Check that the blade is properly retained by all the hooks. Lock the blade end into place.
6) Reinstall wiper frame to arm, checking that the lock lever is snapped securely into the arm.

For rear wipers:

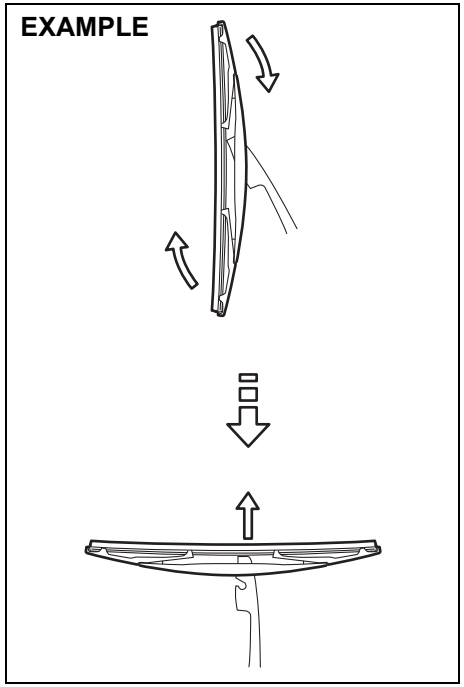

80G146

1) Hold the wiper arm away from the window.
2) Remove the wiper frame from the arm as shown.
3) Slide the blade out as shown.

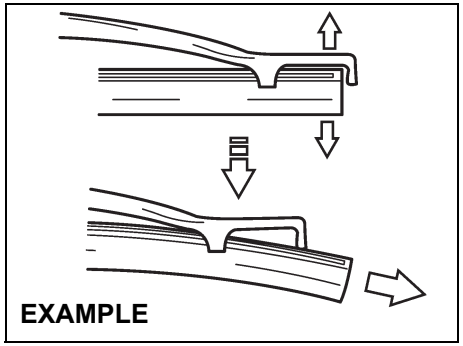

65D151

NOTE:
Do not flex the wiper blade frame end more than necessary. If you do, it can break off.

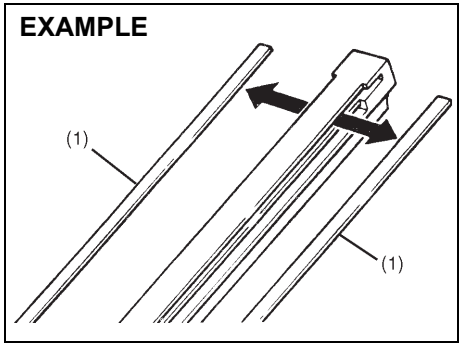

54G135

(1) Retainer

4) If the new blade is provided without the two metal retainers, move them from the old blade to the new one.
5) Install the new blade in the reverse order of removal.
   Check that the blade is properly retained by all the hooks.
6) Reinstall wiper frame to arm in the reverse order of removal.

Windshield washer fluid

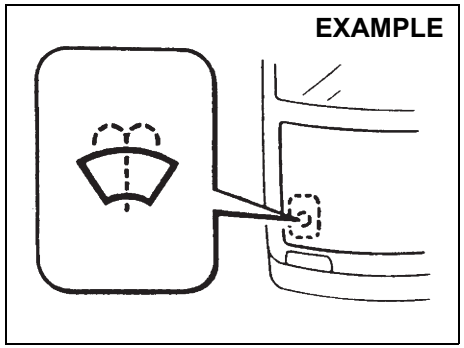

80JM078

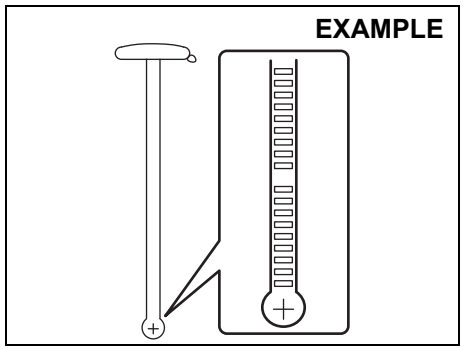

66J116

Check that there is washer fluid in the tank by looking at the washer fluid level gauge which is attached to the cap of the washer fluid tank. If the fluid level is near empty, refill it. Use a good quality windshield washer fluid, diluted with water as necessary.

⚠ WARNING

Do not use anti-freeze solution in the windshield washer reservoir. This can severely impair visibility when sprayed on the windshield, and also damage your vehicle's paint.

NOTICE

Damage may result if the washer motor is operated with no fluid in the washer tank.

Air conditioning system

If you do not use the air conditioner for a long period, such as during winter, it may not give the best performance when you start using it again. To help maintain optimum performance and durability of your air conditioner, it needs to be run periodically. Operate the air conditioner at least once a month for one minute with the engine idling. This circulates the refrigerant and oil and helps protect the internal components.

Air conditioner filter replacement (if equipped)

Since special procedures are required, ask your authorized SUZUKI dealer for this job.

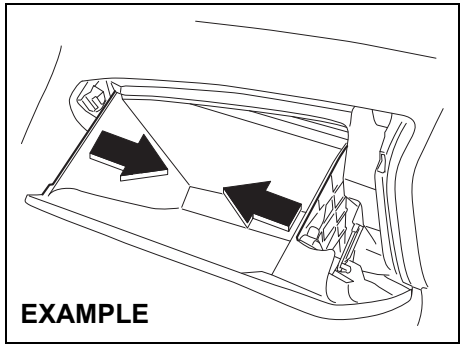

54P000734

1) To approach the air conditioner filter, remove the glove box. Press inward on both sides of the glove box to unclamp it.

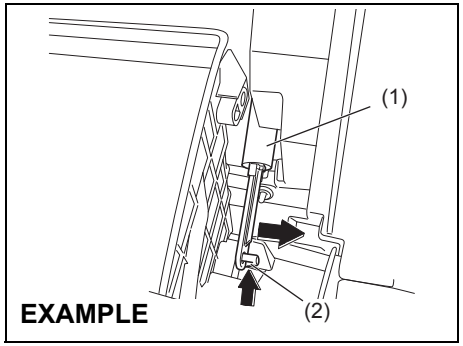

54P000730

2) To remove the glove box, remove the damper (if equipped) (1) by shifting it to the right side while pressing the tab (2).

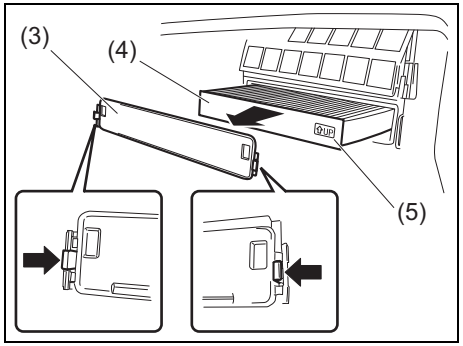

54P000731

3) Remove the cover (3) and pull out the air conditioner filter (4).

NOTE:
When you install a new filter, check that the UP mark (5) faces upward.

MEMO

EMERGENCY SERVICE

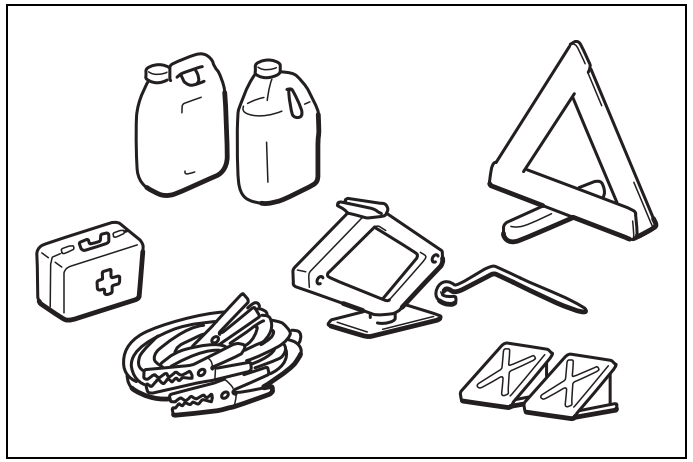

60G411

Tire changing tool 8-1
Jacking instructions 8-1
Flat tire repair kit (if equipped) 8-5
Jump-starting instructions 8-8
Towing 8-10
Engine trouble: Starter does not operate 8-11
Engine trouble: Flooded engine 8-11
Engine trouble: Overheating 8-12

Tire changing tool

EXAMPLE

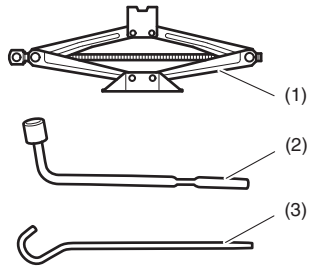

61MM0B100

(1) Jack
(2) Wheel brace
(3) Jack handle

The tire changing tools are stowed in the luggage compartment.
Refer to “LUGGAGE COMPARTMENT” in “ILLUSTRATED TABLE OF CONTENTS” section.

⚠ WARNING

After using the tire changing tools, stow them securely or they can cause injury if an accident occurs.

⚠ CAUTION

The jack should be used only to change wheels. It is important to read the jacking instructions in this section before attempting to use the jack.

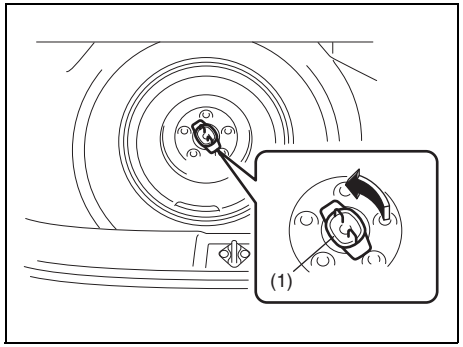

80J048

To remove the spare tire (if equipped), turn its bolt (1) counterclockwise and remove it.

Jacking instructions

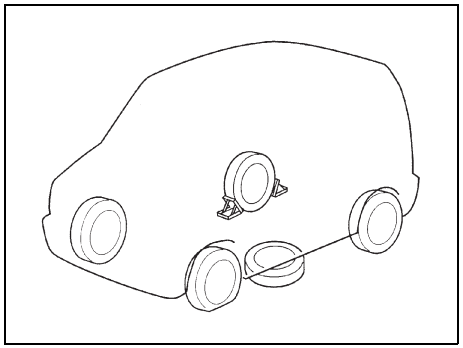

75F062

1) Place the vehicle on level, hard ground.
2) Set the parking brake firmly and shift into “R” (Reverse).

⚠ WARNING

- **Shift into “R” (Reverse) when you jack up the vehicle.**
- **Never jack up the vehicle with the transaxle in “N” (Neutral). Otherwise, unstable jack may cause an accident.**

3) Turn on the hazard warning flasher if your vehicle is near traffic.
4) Block the front and rear of the wheel diagonally opposite of the wheel being lifted.
5) Place the spare wheel near the wheel being lifted as shown in the illustration in case the jack slips.

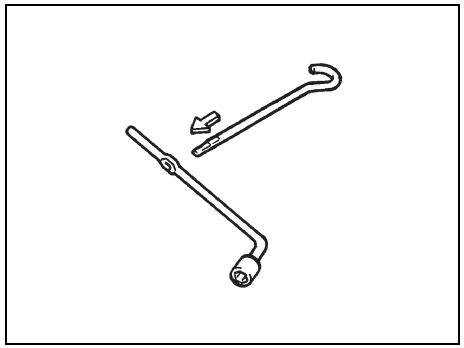

54G253

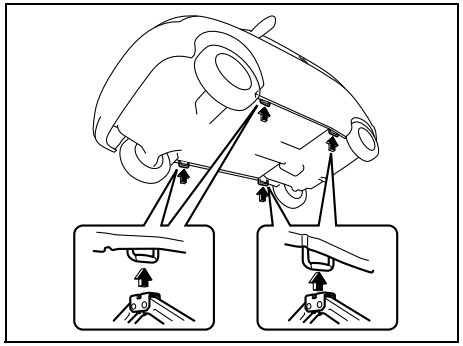

63J100

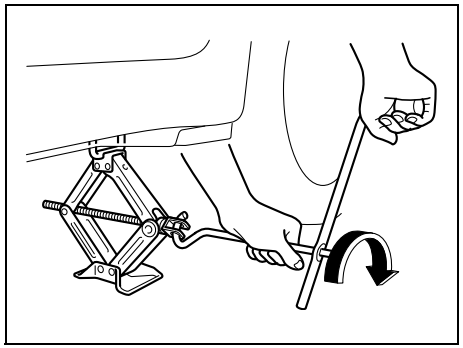

63J101

6) Position the jack at an angle as shown in the illustration and raise the jack by turning the jack handle clockwise until the jack-head groove fits around the jacking bar beneath the vehicle body.
7) Continue to raise the jack slowly and smoothly until the tire clears the ground. Do not raise the vehicle more than necessary.

⚠ WARNING

- **Use the jack only to change wheels on level, hard ground.**
- **Never jack up the vehicle on an inclined surface.**
- **Never raise the vehicle with the jack in a location other than the specified jacking point (shown in the illustration) near the wheel to be changed.**
- **Check that the jack is raised at least 25 mm (1 inch) before it contacts the flange. Use of the jack when it is within 25 mm (1 inch) of being fully collapsed may result in failure of the jack.**
- **Never get under the vehicle when it is supported by the jack.**
- **Never run the engine when the vehicle is supported by the jack and never allow passengers to remain in the vehicle.**

Raising vehicle with garage jack

- Apply the garage jack to one of the points indicated below.
- Always support the raised vehicle with jack stands (commercially available) at the points indicated below.

Front jacking point for garage jack (1)

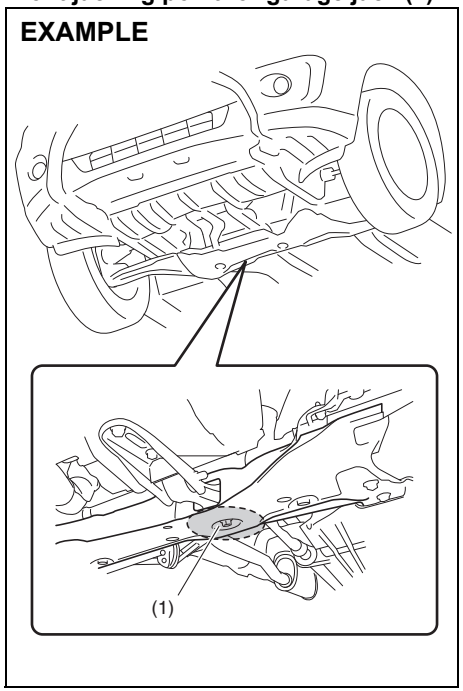

54P000801

Rear jacking point for garage jack (2)

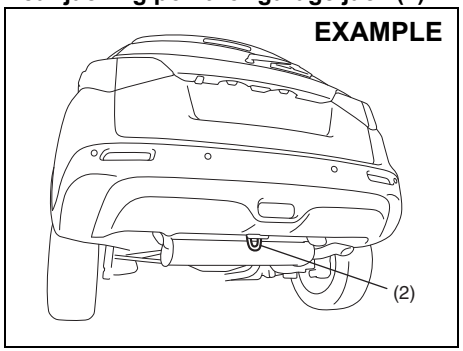

54P000802

Application point for jack stand (3) or two-column lift

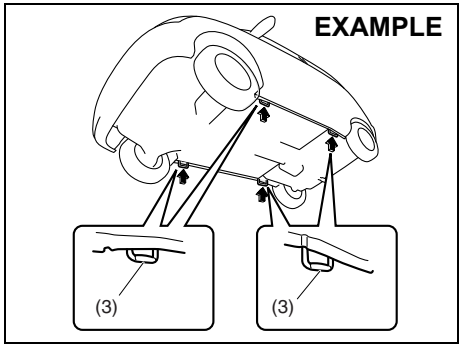

61MM0B103

NOTICE

Never apply a garage jack to the exhaust pipe, side under spoiler (if equipped), engine undercover or rear torsion beam.

NOTE:
For more details, contact an authorized SUZUKI dealer.

Changing wheels

To change a wheel, use the following procedure:

1) Remove the jack, tools and spare wheel from the vehicle.
2) Loosen, but do not remove the wheel bolts.
3) Jack up the vehicle (follow the jacking instructions in this section).

⚠ WARNING

- **Shift into "R" (Reverse) when you jack up the vehicle.**
- **Never jack up the vehicle with the transaxle in "N" (Neutral). Otherwise, unstable jack may cause an accident.**

4) Remove the wheel bolts and wheel.

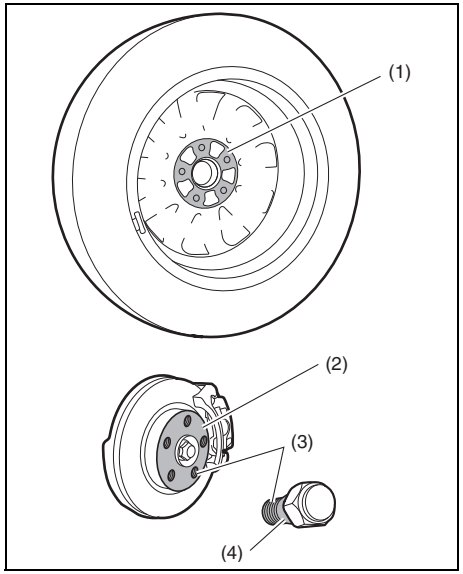

61MM0A209

5) Clean any mud or dirt off from the surface of the wheel (1), hub (2), thread part (3) and surface of the wheel bolts (4) with a clean cloth. Clean the hub carefully; it may be hot from driving.
6) Install the new wheel and replace the wheel bolts with their cone shaped end facing the wheel. Tighten each bolt snugly by hand until the wheel is securely seated on the hub.

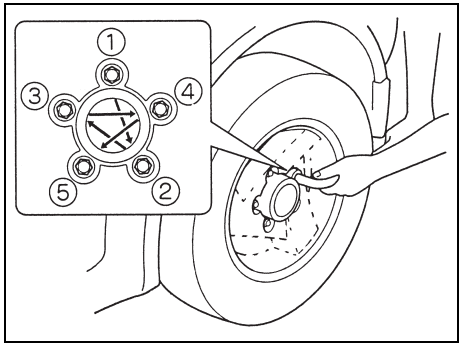

81A057

Tightening torque for wheel bolt
85 Nm (8.7 kg-m, 62.7 lb-ft)

7) Lower the jack and fully tighten the bolts with a wrench in numerical order as shown in the illustration.

⚠ WARNING

Use genuine wheel bolts and tighten them to the specified torque as soon as possible after changing wheels. Incorrect wheel bolts or improperly tightened wheel bolts may come loose or fall off, which can result in an accident. If you do not have a torque wrench, have the wheel bolt torque checked by an authorized SUZUKI dealer.

Full wheel cover (if equipped)

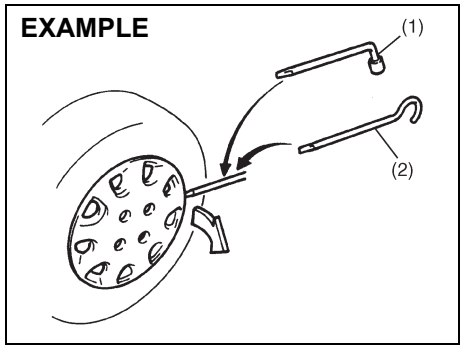

60G309

(1) or (2) Flat end tool

Your vehicle includes two tools, a wheel brace and a jack crank, one of which has a flat end.
Use the tool with the flat end to remove the full wheel cap, as shown above.

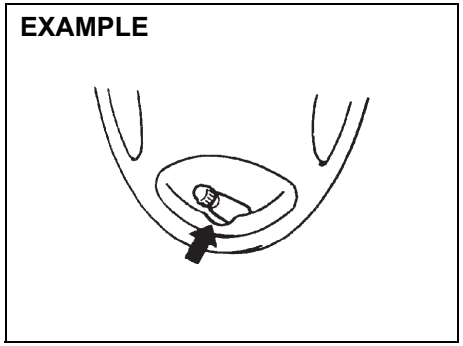

54P000803

Install the full wheel cover not to cover or foul the air valve.

Flat tire repair kit (if equipped)

The flat tire repair kit is stowed in the luggage compartment.
Refer to “LUGGAGE COMPARTMENT” in “ILLUSTRATED TABLE OF CONTENTS” section.

⚠ WARNING

Failure to follow the instructions in this section for using the flat tire repair kit can result in an increased risk of loss of control and an accident.

Carefully read and follow the instructions in this section.

IMPORTANT
The flat tire repair kit cannot be used in the following cases. Consult a SUZUKI dealer or a roadside assistance service.
- **Cuts or piercing in the tire tread larger than approx. 4 mm.**
- **Cuts in the tire side wall.**
- **Tire damage caused by driving with considerably reduced tire pressure or even with deflated tire.**
- **The tire bead completely unseated outside of the rim.**
- **The rim damaged.**

Small punctures in the tire tread, caused by a nail or a screw, can be sealed with the flat tire repair kit.
Do not remove nails or screws from the tire during an emergency repair.

Flat tire repair kit contents

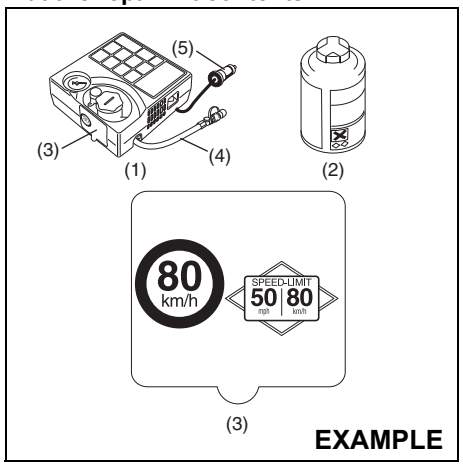

61MM0A090

(1) Air compressor
(2) Sealant bottle
(3) Speed restriction sticker (with air compressor)
(4) Air hose
(5) Power plug

⚠ WARNING

Flat tire repair kit sealant is harmful if swallowed, or if it comes in contact with skin or eyes. If swallowed, do not induce vomiting. Give plenty of water (if possible charcoal slurry) and seek medical attention immediately. If sealant gets in eyes, flush eyes with water and seek medical attention. Wash thoroughly after handling. Solution can be poisonous to animals. Keep out of the reach of children and animals.

NOTICE

Replace the sealant before expiry date indicated on the label of the sealant bottle. To purchase new sealant, see your SUZUKI dealer.

Emergency repair

1) Place the vehicle on level, hard ground. Set the parking brake firmly and shift into “R” (Reverse).
   Turn on the hazard warning flasher if your vehicle is near traffic.
   Block the front and rear of the wheel diagonally opposite of the wheel being repaired.
2) Take out the sealant bottle and the compressor.
3) At the top of the compressor, remove the cap that covers the socket for the sealant bottle, and then screw the bottle into the socket.
4) Unscrew the valve cap from the tire valve.
5) Connect the air hose of the air compressor to the tire valve.
6) Connect the power plug of the compressor to the accessory socket. Start the engine. Switch on the compressor. Inflate the tire to the required air pressure.

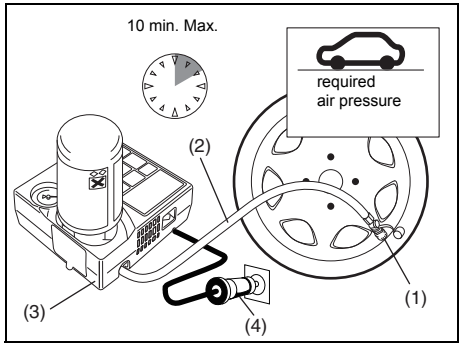

61MM0A091

(1) Tire valve
(2) Air hose
(3) Compressor
(4) Power plug

NOTICE

Do not operate the compressor for longer than 10 minutes. It can cause overheating of the compressor.

If the tire cannot be inflated to the required air pressure within 5 minutes, move the vehicle a few meters back and forth to spread the sealant over the entire tire. Then, inflate the tire again.

If the tire still cannot be inflated to the required air pressure, the tire may be severely damaged. In this case, the flat tire repair kit cannot provide the necessary seal. Consult a SUZUKI dealer or a roadside assistance service.

NOTE:
If the tire is over-inflated, deflate air by loosening the screw of the filler hose.

7) Affix the speed restriction label from the air compressor in the driver’s field of view.
8) Make a short drive immediately after inflating the tire to the required air pressure. Drive carefully with a maximum speed of 80 km/h (50 mph).
9) Carry on driving carefully to the nearest SUZUKI dealer or a tire repair shop.

⚠ WARNING

Do not affix the speed restriction label to the air bag. Also do not affix it to the warning light indicator or to the speedometer.

10) After 10 km (6 mile) running, check the tire pressure with the pressure gauge of the compressor. If the air pressure indicates more than 220 kPa (2.2 bar), the emergency repair is completed. But, if the air pressure indicates less than the required air pressure, correct the tire pressure to the required air pressure. If the tire pressure has dropped below 130 kPa (1.3 bar), the flat tire repair kit cannot provide the necessary seal. Do

not use the tire and consult a SUZUKI dealer or a roadside assistance service.

⚠ WARNING

Check the tire pressure and confirm the completion of the emergency repair after 10 km (6 mile) of running.

NOTICE

Have the tire renewed at the nearest SUZUKI dealer. When reusing the sealed tire, consult a tire repair shop. The wheel can be reused after wiping sealant off completely with cloth in order to prevent rust, but the tire valve and tire pressure monitoring system (TPMS) sensor must be renewed.
Dispose of the sealant bottle at a SUZUKI dealer or in accordance with your regional codes and practices.
After using the sealant bottle, replace it with a new bottle from your SUZUKI dealer.

Using compressor to inflate a tire

1) Place the vehicle on level, hard ground. Set the parking brake firmly and shift into “R” (Reverse).
2) Take out the compressor.
3) Unscrew the valve cap from the tire valve.
4) Connect the air hose of the compressor to the tire valve.
5) Connect the power plug of the compressor to the accessory socket. Start the engine. Switch on the compressor. Inflate the tire to the required air pressure.

NOTICE

Do not operate the compressor for longer than 10 minutes. It can cause overheating of the compressor.

Jump-starting instructions

⚠ WARNING

- **Never attempt to jump-start your vehicle if the battery appears to be frozen. Batteries in this condition may explode.**
- **When making jump lead connections, check that your hands and the jump leads remain clear from pulleys, belts or fans.**
- **Batteries produce flammable hydrogen gas. Keep flames and sparks away from the battery or an explosion may occur. Never smoke when working near the battery.**
- **If the booster battery you use for jump-starting is installed in another vehicle, check that the two vehicles are not touching each other.**
- **If your battery discharges repeatedly, for no apparent reason, have your vehicle inspected by an authorized SUZUKI dealer.**
- **To avoid harm to yourself or damage to your vehicle or battery, follow the jump-starting instructions below.**
  If you are in doubt, call for qualified road service.

NOTICE

Your vehicle should not be started by pushing or towing. This starting method could result in permanent damage to the catalytic converter. Use jump leads to start a vehicle with a weak or flat battery.

1) Use only a 12-volt battery to jump-start your vehicle. Position the good 12-volt battery close to your vehicle so that the jump leads will reach both batteries. When using a battery installed on another vehicle, check that two vehicles do not touch each other. Set the parking brakes fully on both vehicles.
2) Turn off all vehicle accessories, except those necessary for safety reasons (for example, headlights or hazard lights).

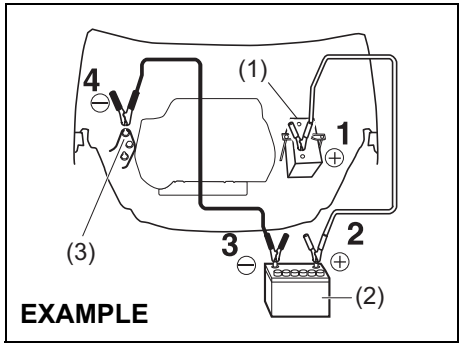

54P000804

3) Connect jump leads as follows:
   1. Connect one end of the first jump lead to the positive (+) terminal of the flat battery (1).
   2. Connect the other end to the positive (+) terminal of the booster battery (2).
   3. Connect one end of the second jump lead to the negative (–) terminal of the booster battery (2).
   4. Make the final connection to an unpainted, heavy metal part (i.e. engine mount bracket (3)) of the engine of the vehicle with the flat battery (1).

⚠ WARNING

Never connect the jump lead directly to the negative (–) terminal of the discharged battery, or an explosion may occur.

⚠ CAUTION

Connect the jump lead to the engine mount bracket securely. If the jump lead disconnects from the engine mount bracket because of vibration at the start of the engine, the jump lead could be caught in the drive belts.

4) If the booster battery you are using is fitted to another vehicle, start the engine of the vehicle with the booster battery. Run the engine at moderate speed.
5) Start the engine of the vehicle with the flat battery.
6) Remove the jump leads in the exact reverse order in which you connected them.

Towing

If you need to have your vehicle towed, contact a professional service. Your dealer can provide you with detailed towing instructions.

⚠ WARNING

For vehicles equipped with the radar brake support system, if your vehicle is towed with the engine on, press radar brake support OFF switch and turn off the radar brake support system. If not, unexpected accidents related to the system being turned on may occur.

NOTICE

Observe the following instructions when towing your vehicle.

- **To help avoid damage to your vehicle during towing, proper equipment and towing procedures must be used.**
- **Using the frame hook, tow your vehicle on paved roads for short distances at low speed.**

2-wheel drive (2WD) manual transaxle

Manual transaxle vehicles may be towed using either of the following methods.

1) From the front, with the front wheels lifted and the rear wheels on the ground. Before towing, check that the parking brake is released.
2) From the rear, with the rear wheels lifted and the front wheels on the ground, provided the steering and drivetrain are in operational condition. Before towing, check that transaxle is in neutral, the steering wheel is unlocked (vehicle without keyless push start system - the ignition key should be in “ACC” position) (vehicle with keyless push start system - the ignition mode is “ACC”), and the steering wheel is secured with a clamping device designed for towing service.

NOTICE

The steering column is not strong enough to withstand shocks transmitted from the front wheels during towing. Always unlock the steering wheel before towing.

4-wheel drive (4WD)

Your vehicle should be towed under one of the following conditions:

1) With all four wheels on a flat-bed truck.
2) With the front or rear wheels lifted and a dolly under the other wheels.

Engine trouble: Starter does not operate

1) Try turning the ignition switch to “START” position or try pressing the engine switch to change the ignition mode to “START” with the headlights turned on to determine the battery condition. If the headlights go excessively dim or go off, it usually means that either the battery is flat or the battery terminal contact is poor. Recharge the battery or correct battery terminal contact as necessary.
2) If the headlights remain bright, check the fuses. If the reason for failure of the starter is not obvious, there may be a major electrical problem. Have the vehicle inspected by your authorized SUZUKI dealer.

Engine trouble: Flooded engine

(Vehicle without keyless push start system)
If the engine is flooded with gasoline, it may be hard to start. If this happens, press the accelerator pedal all the way to the floor and hold it there while cranking the engine.
- For gasoline engine model, do not operate the starter motor for more than 12 seconds.
- For diesel engine model, do not operate the starter motor for more than 30 seconds.

(Vehicle with keyless push start system)
If the engine is flooded with gasoline, it may be hard to start. If this happens, press the accelerator pedal all the way to the floor and hold it there while cranking the engine.
- For gasoline engine model, do not operate the starter motor for more than 12 seconds.
- For diesel engine model, do not operate the starter motor for more than 30 seconds.

NOTE:
If the engine refuses to start, the starter motor automatically stops after a certain period of time. After the starter motor has automatically stopped or if there is anything abnormal in the engine starting system, the starter motor runs only while the engine switch is held pressed.

Engine trouble: Overheating

The engine could overheat temporarily under severe driving conditions. If the engine coolant temperature gauge indicates overheating during driving:

1) Turn off the air conditioner, if equipped.
2) Take the vehicle to a safe place and park.
3) Run the engine at a normal idle speed for a few minutes until the indicator is within the normal, acceptable temperature range between “H” and “C”.

⚠ WARNING

If you see or hear escaping steam, stop the vehicle in a safe place and immediately turn off the engine to cool it. Do not open the hood when steam is present. When the steam can no longer be seen or heard, open the hood to see if the coolant is still boiling. If it is, you must wait until it stops boiling before you proceed.

If the temperature indication does not come down to within the normal, acceptable range:

1) Turn off the engine and check that the water pump belt and pulleys are not damaged or slipping. If any abnormality is found, correct it.
2) Check the coolant level in the reservoir. If it is found to be lower than “LOW” line, check radiator, water pump, radiator hoses and heater hoses for leakage. If leakage that may cause overheating is found, do not run the engine until these problems have been corrected.
3) If leakage is not found, carefully add coolant to the reservoir and then the radiator, if necessary. (Refer to “Engine coolant” in “INSPECTION AND MAINTENANCE” section.)

NOTE:
If engine overheats and you are not sure what to do, contact your SUZUKI dealer.

79J007

⚠ WARNING

- **It is hazardous to remove the radiator cap (or degassing tank cap for a diesel engine) when the water temperature is high, because scalding fluid and steam may be blown out under pressure. The cap should only be taken off when the coolant temperature has lowered.**
- **To help prevent personal injury, keep hands, tools and clothing away from the engine cooling fan and air-conditioner fan (if equipped). These electric fans can automatically turn on without warning.**

MEMO

APPEARANCE CARE

Corrosion prevention 9-1
Vehicle cleaning 9-2

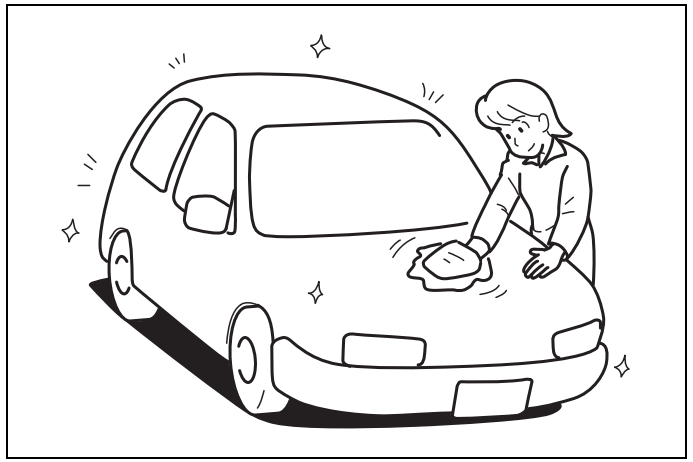

60G412

Corrosion prevention

It is important to take good care of your vehicle to protect it from corrosion. Listed below are instructions for how to maintain your vehicle to prevent corrosion. Please read and follow these instructions carefully.

Important information about corrosion

Common causes of corrosion

1) Accumulation of road salt, dirt, moisture or chemicals in hard-to-reach areas of the vehicle underbody or frame.
2) Chipping, scratches and any damage to treated or painted metal surfaces resulting from minor accidents or abrasion by stones and gravel.

Environmental conditions which accelerate corrosion

1) Road salt, dust control chemicals, sea air or industrial pollution will all accelerate the corrosion of metal.
2) High humidity will increase the rate of corrosion particularly when the temperature range is just above the freezing point.
3) Moisture in certain areas of a vehicle for an extended period of time may promote corrosion even though other body sections may be completely dry.
4) High temperatures will cause an accelerated rate of corrosion to parts of the vehicle which are not well-ventilated to permit quick drying.

This information illustrates the necessity of keeping your vehicle (particularly the underbody) as clean and dry as possible. It is equally important to repair any damage to the paint or protective coatings as soon as possible.

How to help prevent corrosion

Wash your vehicle frequently

The best way to preserve the finish on your vehicle and to help avoid corrosion is to keep it clean with frequent washing.
Wash your vehicle at least once during the winter and once immediately after the winter. Keep your vehicle, particularly the underside, as clean and dry as possible.
If you frequently drive on salted roads, your vehicle should be washed at least once a month during the winter. If you live near the ocean, your vehicle should be washed at least once a month throughout the year.

For washing instructions, refer to “Vehicle cleaning” section.

Remove foreign material deposits

Foreign material such as salts, chemicals, road oil or tar, tree sap, bird droppings and industrial fall-out may damage the finish of your vehicle if it is left on painted surfaces. Remove these types of deposits as quickly as possible. If these deposits are difficult to wash off, an additional cleaner may be required. Check that any cleaner you use is not harmful to painted surfaces and is specifically intended for your purposes. Follow the manufacturer’s directions when using these special cleaners.

Repair finish damage

Carefully examine your vehicle for damage to the painted surfaces. Should you find any chips or scratches in the paint, touch them up immediately to prevent corrosion from starting. If the chips or scratches have gone through to the bare metal, have a qualified body shop make the repair.

Keep passenger and luggage compartments clean

Moisture, dirt or mud can accumulate under the floor mats and may cause corrosion. Occasionally, check under these mats to ensure that this area is clean and dry. More frequent checks are necessary if the vehicle is used for off-road driving or in wet weather.
Certain cargos such as chemicals, fertilizers, cleaners, salts, etc. are extremely corrosive by nature. These products should be transported in sealed containers. If they

are spilled or leaked, clean and dry the area immediately.

Store your vehicle in a dry, well-ventilated area
Do not park your vehicle in a damp, poorly-ventilated area. If you often wash your vehicle in the garage and place it there in wet condition, your garage may be damp. The high humidity in the garage may cause or accelerate corrosion. A wet vehicle may corrode even in a heated garage if the ventilation is poor.

⚠ WARNING

Do not apply additional undercoating or rust preventive coating on or around exhaust system components such as the catalytic converter and exhaust pipes. A fire could be started if the undercoating substance becomes overheated.

Vehicle cleaning

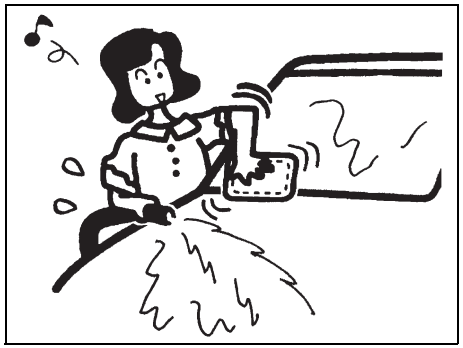

76G044S

⚠ WARNING

When cleaning the interior or exterior of the vehicle, do not use flammable solvents such as lacquer thinners, gasoline and benzene. Also, do not use cleaning materials such as bleaches and strong household detergents. The materials could cause personal injury or damage to the vehicle.

Cleaning interior

Vinyl upholstery
Prepare a solution of soap or mild detergent mixed with warm water. Apply the solution to the vinyl with a sponge or soft cloth and let it soak for a few minutes to loosen dirt.
Rub the surface with a clean, damp cloth to remove dirt and the soap solution. If some dirt still remains on the surface, repeat this procedure.

Fabric upholstery
Remove loose dirt with a vacuum cleaner. Using a mild soap solution, rub stained areas with a clean damp cloth. To remove soap, rub the areas again with a cloth dampened with water. Repeat this until the stain is removed, or use a commercial fabric cleaner for tougher stains. If you use a fabric cleaner, carefully follow the manufacturer's instructions and precautions.

Leather upholstery
Remove loose dirt with a vacuum cleaner. Using a mild soap or saddle soap solution, wipe dirt off with a clean damp soft cloth. To remove soap, wipe the areas again with a soft cloth dampened with water. Wipe the areas dry with a soft dry cloth. Repeat this until the dirt or stain is removed, or use a commercial leather cleaner for tougher dirt or stains. If you use a leather cleaner, carefully follow the manufacturer's instructions and precautions. Do not use solvent type cleaners or abrasive cleaners.

NOTE:
- *In order to keep leather upholstery looking good, it should be cleaned at least twice a year.*
- *If leather upholstery becomes wet, immediately wipe it dry with tissue paper or a soft cloth. Water may cause leather to harden and shrink if it is not wiped off.*
- *When parking on sunny days, select a shady place or use a sunshade. If leather upholstery is exposed to direct sunlight for a long time, it may discolor and shrink.*
- *As is common with natural materials, leather is inherently irregular in grain and cowhide has spots in its natural state. These do not affect the performance of the leather in any way.*

Seat belts
Clean seat belts with a mild soap and water. Do not use bleach or dye on the belts. They may weaken the fabric in the belts.

Vinyl floor mats
Ordinary dirt can be removed from vinyl with water or mild soap. Use a brush to help loosen dirt. After the dirt is loosened, rinse the mat thoroughly with water and dry it in the shade.

Carpets
Remove dirt and soil as much as possible with a vacuum cleaner. Using a mild soap solution, rub stained areas with a clean damp cloth. To remove soap, rub the areas again with a cloth dampened with water. Repeat this until the stain is removed, or use a commercial carpet cleaner for tougher stains. If you use a carpet cleaner, carefully follow the manufacturer's instructions and precautions.

Instrument panel and console
Remove loose dirt with a vacuum cleaner. Gently wipe dirt off with a tightly squeezed damp clean cloth. Repeat this until the dirt is removed.

NOTICE

Do not use chemical products that contain silicon to wipe electrical components such as the air conditioning system, audio, navigation system, or other switches. These will cause damage to the components.

Cleaning exterior

NOTICE

It is important that your vehicle be kept clean and free from dirt. Failure to keep your vehicle clean may result in fading of the paint or corrosion to various parts of the vehicle body.

Caring for aluminum wheels
NOTE:
- *Do not use an acidic or alkaline detergent, or a cleaner containing petroleum solvent to wash aluminum wheels. These types of cleaner will cause permanent spots, discoloration and cracks on finished surfaces and damage to center caps.*
- *Do not use a bristle brush and soap containing an abrasive material. These will damage finished surfaces.*

Washing

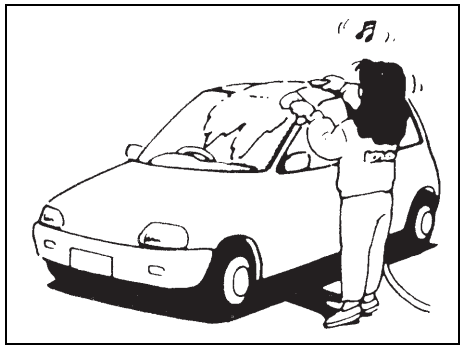

60B212S

⚠ WARNING

- **Never attempt to wash and wax your vehicle with the engine running.**
- **When cleaning the underside of the body and fender, where there may be sharp-edged parts, wear gloves and a long-sleeved shirt to protect your hands and arms from being cut.**
- **After washing your vehicle, carefully test the brakes before driving to check that they have maintained their normal effectiveness.**

⚠ CAUTION

If your vehicle is equipped with an rain-sensing wiper system, place the wiper control lever in "OFF" position. If the lever is left in "AUTO" position, the wipers could unexpectedly operate and cause an injury, and could also be damaged.

When washing the vehicle, park it in the place where direct sunlight does not fall on it and follow the instructions below:

1) Flush the underside of body and wheel housings with pressurized water to remove mud and debris. Use plenty of water.

NOTICE

When washing the vehicle:

- **Avoid directing steam or hot water of more than 80°C (176°F) on plastic parts.**
- **To avoid damaging engine components, do not use pressurized water in the engine compartment.**

2) Rinse the body to loosen the dirt. Remove dirt and mud from the body exterior with running water. You may use a soft sponge or brush. Do not use hard materials which can scratch the paint or plastic. Remember that the headlight covers or lenses are made of plastic in many cases.

NOTICE

To avoid damage to the paint or plastic surface, do not wipe the dirt off without ample water. Follow the above procedure.

3) Wash the entire exterior with a mild detergent or car wash soap using a sponge or soft cloth. The sponge or cloth should be frequently soaked in the soap solution.

NOTICE

When using a commercial car wash product, observe the cautions specified by the manufacturer. Never use strong household detergents or soaps.

4) Once the dirt has been completely removed, rinse off the detergent with running water.
5) Wipe off the vehicle body with a wet chamois or cloth and allow it to dry in the shade.

6) Check carefully for damage to painted surfaces. If there is any damage, touch up the damage following the procedure below:
   1. Clean all damaged spots and allow them to dry.
   2. Stir the paint and touch up the damaged spots lightly using a small brush.
   3. Allow the paint to dry completely.

NOTICE
If you use an automatic car wash, check that your vehicle's body parts, such as spoilers, cannot be damaged. If you are in doubt, consult the car wash operator for advice.

Waxing

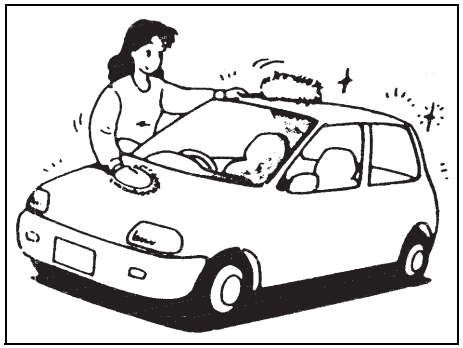

60B211S

After washing the vehicle, waxing and polishing are recommended to further protect and beautify the paint.

- Only use waxes and polishes of good quality.
- When using waxes and polishes, observe the precautions specified by the manufacturers.

GENERAL INFORMATION

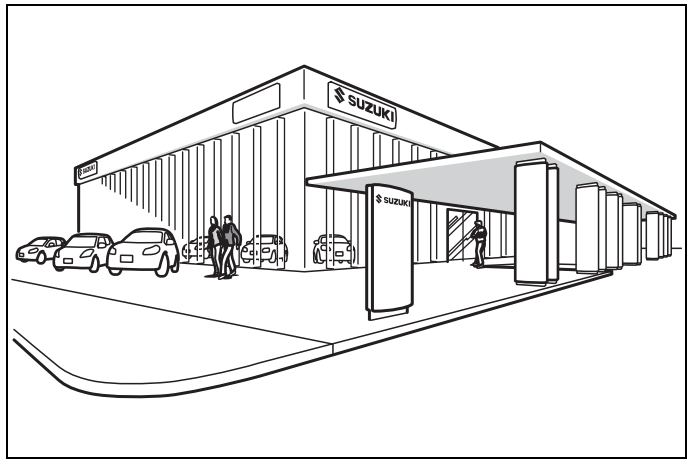

84MM01001

Vehicle identification **10-1**
Fuel consumption **10-2**

Vehicle identification

Chassis serial number

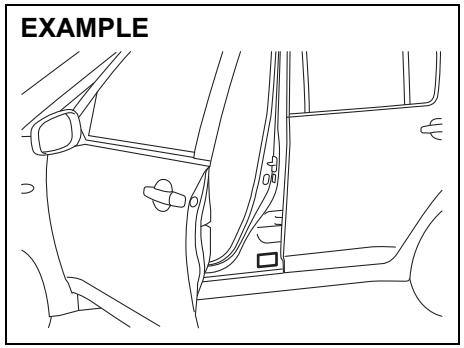

63J104

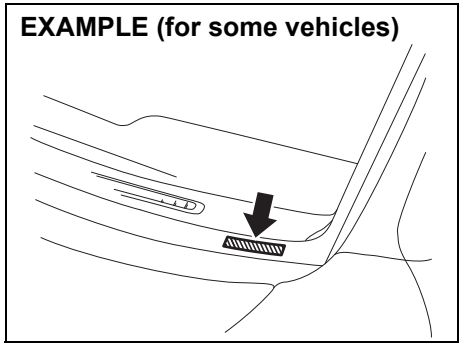

68LM101

The chassis and/or engine serial numbers are used to register the vehicle. They are also used to assist your dealer when ordering or referring to special service information. Whenever you have occasion to consult your SUZUKI dealer, remember to identify your vehicle with this number. Should you find the number difficult to read, you will also find it on the identification plate.

Engine serial number

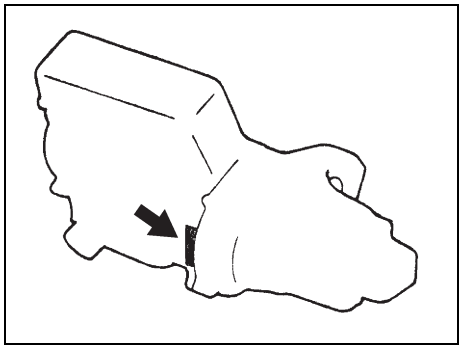

60G128

The engine serial number is stamped on the cylinder block as shown in the illustration.

Fuel consumption (For Europe Euro VI)

2WD: 2-wheel drive
4WD: 4-wheel drive

	M16A with ENG A-STOP		D16AA with ENG A-STOP	
	2WD	**4WD**	**2WD**	**4WD**
Urban (L/100km)/CO_2 (g/km)	6.3/145	6.5/151	4.6/120	4.7/124
Extra-urban (L/100km)/CO_2 (g/km)	4.8/111	5.1/118	3.7/98	4.0/104
Combined (L/100km)/CO_2 (g/km)	5.3/123	5.6/130	4.0/106	4.2/111

NOTE:
As these data are obtained under certain specific conditions, actual fuel consumption of your vehicle will be different from these data.

MEMO

SPECIFICATIONS

NOTE:
Specifications are subject to change without notice.

M/T: Manual transaxle

Gasoline: Gasoline engine model
Diesel: Diesel engine model

2WD: 2-wheel drive
4WD: 4-wheel drive

ITEM: Dimensions	UNIT: mm (in.)	
Overall length		4175 (164.4)
Overall width		1775 (69.9)
Overall height		1610 (63.4)
Wheelbase		2500 (98.4)
Track	Front	1535 (60.4)
	Rear	1505 (59.3)
Ground clearance		185 (7.3)

ITEM: Mass (weight)	UNIT: kg (lbs)	GASOLINE ENGINE MODEL	DIESEL ENGINE MODEL
Curb mass (weight)	2WD	1075 – 1180 (2370 – 2601)	1230 – 1295 (2712 – 2855)
	4WD	1160 – 1245 (2557 – 2745)	1295 – 1360 (2855 – 2998)
Gross vehicle mass (weight) rating		1730 (3814)	1870 (4123)
Permissible maximum axle weight	Front	1040 (2293)	1040 (2293)
	Rear	910 (2006)	910 (2006)

ITEM: Engine		
Type	M16A (DOHC)	D16AA (DOHC)
Number of cylinders	4	←
Bore	78.0 mm (3.07 in.)	79.5 mm (3.12 in.)
Stroke	83.0 mm (3.27 in.)	80.5 mm (3.16 in.)
Piston displacement	1586 cm^3 (1586 cc, 96.8 cu.in)	1598 cm^3 (1598 cc, 97.5 cu.in)
Compression ratio	11.0 : 1	16.5 : 1

ITEM: Electrical			
Standard spark plug	Gasoline	without ENG A-STOP system	DENSO K16HPR-U11
		with ENG A-STOP system	NGK SILFR6A11
Battery	Gasoline	without ENG A-STOP system	12V 36Ah 300A(EN)
		with ENG A-STOP system	12V 60Ah 540A(EN)
	Diesel	without ENG A-STOP system	12V 60Ah 620A(EN)
		with ENG A-STOP system	12V 72Ah 630A(EN)
Fuses		See “INSPECTION AND MAINTENANCE” section.	

ITEM: Lights			WATTAGE	BULB No.
Headlight	Low beam	Without automatic lights	12V 55W	H11
		With automatic lights	LED	–
	High beam		12V 60W	HB3
Front fog light (if equipped)			12V 55W	H11
			12V 35W	H8
Position light			12V 5W	W5W
Daytime running light (if equipped)			12V 13W	P13W
			LED	–
Turn signal light		Front	12V 21W	PY21W
		Rear	12V 21W	P21W
Side turn signal light			12V 5W	WY5W
			LED	–
Tail/brake light			12V 21/5W	P21/5W
High mount stop light			LED	–
Reversing light			12V 16W	W16W
License plate light			12V 5W	W5W
Rear fog light (if equipped)			12V 21W	P21W
Interior light		Glove box light (if equipped)	12V 1.4W	–
		Footwell light (if equipped)	LED	–
		Center (without sunroof)	12V 10W	–
		Other lights	12V 5W	W5W
Vanity mirror light			12V 3W	–

ITEM: Wheels and tires	
Tire size, front and rear	215/60R16 95H*1, 215/55R17 94V*1
Rim size	215/60R16 tire: 16X6 1/2J 215/55R17 tire: 17X6 1/2J
Tire pressures	For the specified tire pressure, see the tire information label located on the driver's door lock pillar.
	When loading 4 people or less, eco tire pressure as listed below is recommended to achieve the smallest amount of fuel consumption.1) Front 280 kPa (2.80 kg/cm^2, 41 psi) Rear 260 kPa (2.60 kg/cm^2, 38 psi)
Recommended snow chain (for Europe)	Radial thickness: 10 mm, axial thickness: 10 mm
Recommended snow tire	215/60R16*2 or 215/55R17*2

NOTE:
1) If loading over 4 people, follow the specified tire pressure listed on the tire information label.

*1 If you cannot prepare tires with the specified load index rate and speed symbol, prepare tires with higher load index rate and speed symbol.
*2 If you prepare snow tires;
- Check that they are tires of the same size, structure and load capacity as the originally installed tires.
- Mount the snow tires on all four wheels.
- Understand that the maximum permissible speed of snow tires is generally less than the originally installed tires.

Consult your SUZUKI dealer or supplier for further information.

ITEM: Recommended fuel / lubricants and capacities (approx.)				
Fuel			See “FUEL RECOMMENDATION” section.	47 L (10.3 Imp gal)
Engine oil	Gasoline	Except for Mexico	Classification: ACEA A1/B1, A3/B3, A3/B4, A5/B5 API SL, SM or SN ILSAC GF-3, GF-4 or GF-5 Viscosity: SAE 0W-20	3.9 L (6.9 Imp pt) (replacement with oil filter)
		For Mexico	Engine oil with “Starburst” symbol	
	Diesel		Classification: ACEA C2 Viscosity: SAE 0W-30	5.65 L (9.9 Imp pt) (replacement with oil filter)
Engine coolant	Gasoline		“SUZUKI LLC: Super (Blue) Coolant”	5.8 L (10.2 Imp pt) (including reservoir tank)
	Diesel			5.5 L (9.7 Imp pt) (including reservoir tank)
Manual transaxle oil	5M/T		“SUZUKI GEAR OIL 75W-80”	2.5 L (4.4 Imp pt)
	6M/T			2.1 L (3.7 Imp pt)
Transfer oil	4WD		“SUZUKI GEAR OIL 75W-85”	0.93 L (1.6 Imp pt)
Rear differential oil	4WD		“SUZUKI GEAR OIL 75W-85”	0.8 L (1.4 Imp pt)
Brake fluid / Clutch fluid			SAE J1704 or DOT4	Refill to the proper oil level according to the instructions in “INSPECTION AND MAINTENANCE” section.

MEMO

SUPPLEMENT

For Australia 12-1
For Mexico 12-3
For European countries, Mexico and South Africa 12-5

For Australia

Built date

Built date is located on vehicle identification plate.
“Built Date” means – the calendar month and the year in which the body shell and power train sub-assemblies are conjoined and the vehicle is driven or moved from the production line.

Temporary-use spare tire (compact spare tire)

Tire size	T135/90R16 102M
Rim size	16 x 4J
Cold tire pressure	420 kPa (60 psi)

Temporary spare tires fitted to this vehicle must have a maximum load rating of not less than 850 kg, or a load index of “102” and a speed category symbol of not less than “M” (130 km/h).
Drive with caution when the temporary-use spare unit is fitted. Reinstall standard unit as soon as possible.

Child restraint

⚠ WARNING

Child restraint anchorages are designed to withstand only those loads imposed by correctly fitted child restraints. Under no circumstances are they to be used for adult seat belts, harnesses or for attaching other items or equipment to the vehicle.

Child restraint top tether anchorage brackets

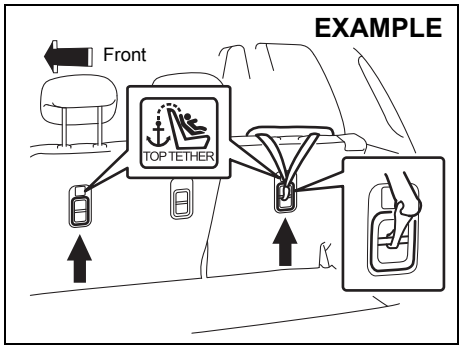

54P000249

Some child restraint systems require the use of a top tether strap. Top tether anchorage brackets are provided in your vehicle at the locations shown in the illustration. The number of the top tether anchorage brackets provided in your vehicle depends on the vehicle specification.

EXAMPLE

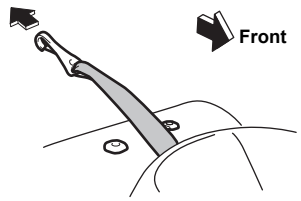

54P001207

Remove the head restraint before anchoring the top tether strap. After anchoring the top tether strap, check that the top tether strap passes as shown in the illustration.
Follow the above procedure in reverse when removing the top tether strap.
Please refer to “Seat belts and child restraint systems” section in “BEFORE DRIVING” section for details on securing your child.

Rear-facing child restraint

58MS030

⚠ WARNING

Do not use a rearward facing child restraint on a seat protected by an air bag in front of it.

⚠ WARNING

Do not install a rear-facing child restraint in the front passenger’s seat. If the passenger’s front air bag inflates, a child in a rear-facing child restraint could be killed or severely injured. The back of a rear-facing child restraint would be too close to the inflating air bag.

If you must use a forward-facing child restraint in the front passenger’s seat, move the front passenger’s seat as far back as possible. Please refer to “Seat belts and child restraint systems” in “BEFORE DRIVING” section for details on securing your child.

Air bag symbol meaning

EXAMPLE

72M00150

You may find this label on the sun visor.

⚠ WARNING

NEVER use a rearward facing child restraint on a seat protected by an ACTIVE AIRBAG in front of it, DEATH or SERIOUS INJURY to the CHILD can occur.

Seat belt warning

Follow this warning as well as the instruction for seat belt in this book.

⚠ WARNING

Seat belts are designed to bear upon the bony structure of the body, and should be worn low across the front of the pelvis or the pelvis, chest and shoulders, as applicable; wearing the lap section of the belt across the abdominal area must be avoided.

- **Seat belts should be adjusted as firmly as possible, consistent with comfort, to provide the protection for which they have been designed. A slack belt will greatly reduce the protection afforded to the wearer.**
- **Care should be taken to avoid contamination of the webbing with polishes, oils and chemicals, and particularly battery acid. Cleaning may safely be carried out using mild soap and water. The belt should be replaced if webbing becomes frayed, contaminated or damaged.**

(Continued)

⚠ WARNING

(Continued)

- **It is essential to replace the entire assembly after it has been worn in a severe impact even if damage to the assembly is not obvious.**
- **Belts should not be worn with straps twisted.**
- **Each belt assembly must only be used by one occupant; it is dangerous to put a belt around a child being carried on the occupant's lap.**

In the case where a "*Seat Belt Assembly*" incorporates an "*Automatic Length Adjusting and Locking Retractor*" or an "*Emergency Locking Retractor*".

⚠ WARNING

- **No modifications or additions should be made by the user which will either prevent the seat belt adjusting devices from operating to remove slack, or prevent the seat belt assembly from being adjusted to remove slack.**
- **Referring to the instruction for seat belt in this book, adjust the seat belt so that the lap and sash portions of the *"Seat Belt Assembly"* fit as firmly as possible consistent with comfort.**

For Mexico

Fuel recommendation

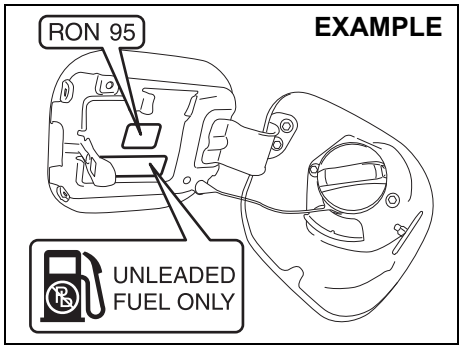

54P000101

Your vehicle requires regular unleaded gasoline with a minimum rating of 87 pump octane ((R + M)/2 method). In some areas, the only fuels that are available are oxygenated fuels.

Oxygenated fuels which meet the minimum octane requirement and the requirements described below may be used in your vehicle without jeopardizing the New Vehicle Limited Warranty.

NOTE:
Oxygenated fuels are fuels which contain oxygen-carrying additives such as MTBE or alcohol.
If "RON 95" label is attached, you must use unleaded gasoline with a minimum rating of 91 pump octane ((R + M)/2 method).

Gasoline containing MTBE

Unleaded gasoline containing MTBE (methyl tertiary butyl ether) may be used in your vehicle if the MTBE content is not greater than 15%. This oxygenated fuel does not contain alcohol.

Gasoline-ethanol blends
Blends of unleaded gasoline and ethanol (grain alcohol), also known as gasohol, may be used in your vehicle if the ethanol content is not greater than 10%.

Gasoline-methanol blends
Fuels containing 5% or less methanol (wood alcohol) may be suitable for use in your vehicle if they contain cosolvents and corrosion inhibitors. Do not use fuels containing more than 5% methanol under any circumstances. Fuel system damage or vehicle performance problems resulting from the use of such fuels are not the responsibility of SUZUKI and may not be covered under the New Vehicle Limited Warranty.

Fuel pump labeling

In some states, pumps that dispense oxygenated fuels are required to be labeled for the type and percentage of oxygenate and whether important additives are present. Such labels may provide enough information for you to determine if a particular blend of fuels meets the requirements listed above. In other areas, pumps may not be clearly labeled as to the content or type of oxygenate and additives. If you are not sure that the fuel you intend to use meets these requirements, check with the service station operator or the fuel supplier.

NOTE:
To help clean the air, SUZUKI recommends you use the oxygenated fuels. However, if you are not satisfied with the driveability or fuel economy of your vehicle when you are using an oxygenated fuel, switch back to the regular unleaded gasoline.

NOTICE

Be careful not to spill fuel containing alcohol while refueling. If fuel is spilled on the vehicle body, wipe it up immediately. Fuels containing alcohol can cause paint damage, which is not covered under the New Vehicle Limited Warranty.

Engine oil and filter

Specified oil

"Starburst" symbol

80JC103

Use engine oil for gasoline engines with the above "Starburst" symbol, certified by American Petroleum Institute.

We highly recommend you use SAE 0W-20 or 5W-30 oil.
SAE 0W-20 is the best choice for good fuel economy and good starting in cold weather.

NOTICE

Failure to use the recommended oil can result in engine damage.

Tire rotation

4-tire rotation

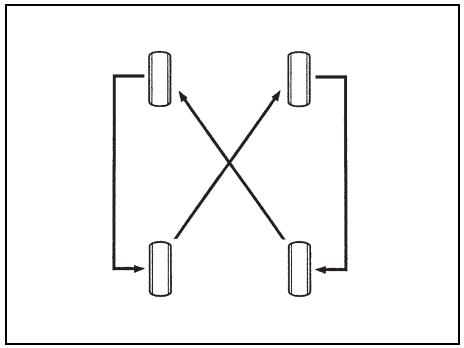

54G114

To avoid uneven wear of your tires and to prolong their life, rotate the tires as illustrated. Tires should be rotated as recommended in the periodic maintenance schedule. After rotation, adjust front and rear tire pressures to the specification listed on your vehicle's tire information label.

For European countries, Mexico and South Africa

Theft deterrent alarm system

A theft deterrent alarm system is armed in about 20 seconds after you lock the doors.
Keyless push start system – Use the remote controller or push the request switch on driver's door handle, front passenger's door handle or tailgate.
Keyless entry system – Use the transmitter.
Once the system is armed, any attempt to open a door by using any other means (*) than the keyless push start system remote controller, the request switch, the keyless entry system transmitter or engine hood (for EU specification vehicle) will cause the alarm to be triggered.
* These means include the following:
  – The key
  – The lock knob on a door
  – The power door locking switch

NOTE:
- *The theft deterrent alarm system generates alarms when any of the predetermined conditions is met. However, the system does not have any function of blocking unauthorized entry into your vehicle.*
- *Always use the keyless push start system remote controller, the request switch or the keyless entry system transmitter to unlock the doors when the theft deterrent alarm system has been armed. Using a key instead will trigger the alarm.*
- *If a person who does not know the theft deterrent alarm system is going to drive your vehicle, we recommend you explain the system and its operation to the person, or disable the system beforehand. Mistakenly triggering the alarm may cause a nuisance to others.*
- *Even if the theft deterrent alarm system is armed, you should still be careful to guard against theft. Do not leave money or things of value in your vehicle.*

How to arm the theft deterrent alarm system (when enabled)

Lock all doors (including the tailgate) using the keyless push start system remote controller, the request switch or the keyless entry system transmitter. The theft deterrent light (1) will start blinking, and the theft deterrent alarm system will be armed in about 20 seconds.

While the system is being armed, the indicator continues to blink at intervals of approximately 2 seconds.

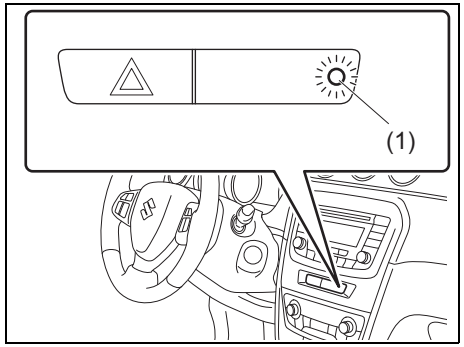

54P000208

NOTE:

- *To prevent the alarm from being accidentally triggered, avoid arming it while anyone remains inside the vehicle. The alarm will be triggered if any person inside unlocks a door or engine hood (for EU specification vehicle) by operating the lock knob or power door locking switch.*
- *The theft deterrent alarm system is not armed when all doors are locked using the key from outside, or using the door lock knobs or the power door locking switch from inside.*
- *If any door is not operated within approximately 30 seconds after the doors have been unlocked using the keyless push start system remote controller, the request switch or the keyless entry system transmitter, the doors are automatically locked again. At the same time, the theft deterrent alarm system is armed if the system is in the enabled state.*

How to disarm the theft deterrent alarm system

Simply unlock the doors using the keyless push start system remote controller, the request switch or the keyless entry system transmitter. The theft deterrent light will go out, indicating that the theft deterrent alarm system is disarmed.

How to stop the alarm
Should the alarm be triggered accidentally, unlock the doors using the keyless push start system remote controller, the request switch or the keyless entry system transmitter, or press the engine switch to change the ignition mode to “ON” or turn the ignition switch to “ON” position. The alarm will then stop.

NOTE:
- *Even after the alarm has stopped, if you lock the doors using the keyless push start system remote controller, the request switch or the keyless entry system transmitter, the theft deterrent alarm system will be rearmed with a delay of about 20 seconds.*
- *If you disconnect the battery while the theft deterrent alarm system is in the armed condition or the alarm is actually in operation, the alarm will be triggered or re-triggered when the battery is then reconnected, although, in the latter case, the alarm remains stopped for the period between disconnection and reconnection of the battery.*
- *Even after the alarm has stopped at the end of the predetermined operation time, it will be triggered again if any door or engine hood (for EU specification vehicle) is opened without disarming the theft deterrent alarm system.*

Checking whether the alarm has been triggered during parking
If the alarm was triggered due to an unauthorized entry into the vehicle and you then press the engine switch to change the ignition mode to “ON” or turn the ignition switch to “ON” position, the theft deterrent light will blink rapidly for about 8 seconds and a buzzer will beep 4 times during this period. If this happens, check whether your vehicle has been broken into while you were away from it.

Enabling and disabling the theft deterrent alarm system
The theft deterrent alarm system can be either enabled or disabled.

When enabled (factory setting)
When the system is enabled, it causes the hazard warning lights to flash for about 40 seconds if any of the alarm trigger conditions is met. The system also causes the interior buzzer to beep intermittently for about 10 seconds, which is followed by intermittent sounding of the horn for about 30 seconds.
The theft deterrent light continues to blink during this time.

When disabled
When the system is disabled, it stays disarmed even if you perform any system arming operation.

How to switch the state of the theft deterrent alarm system
You can switch the theft deterrent alarm system from the enabled state to the disabled state, and vice versa, using the following method.

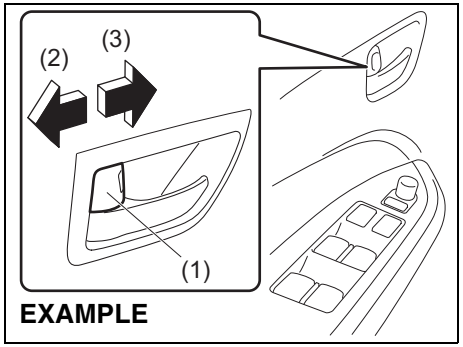

54P000209

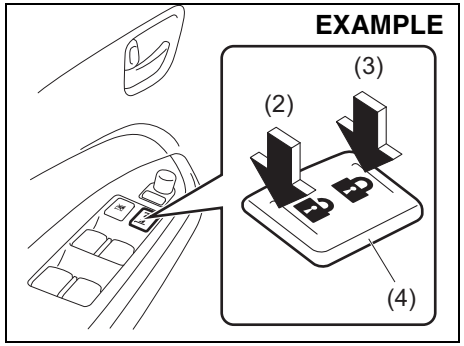

54P000210

(2) UNLOCK
(3) LOCK

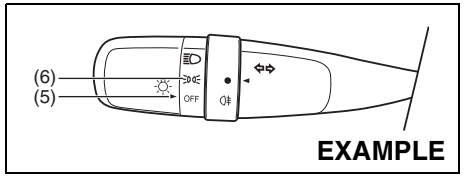

61MM0A137

1) With the ignition mode “ON” or the ignition switch in “ON” position, close all the doors and turn the lock knob (1) on the driver’s door in the unlocking direction (2) (rearward). Turn the knob on the lighting control lever to “OFF” position (5).

NOTE:
All operations included in the following Step 2) and 3) must be completed within 15 seconds.

2) Turn the knob on the lighting control lever to the position (6) and then to “OFF” position (5). Repeat this operation 4 times with the control lever finally set to “OFF” position.
3) Push the lock end (3) (forward end) of the power door lock switch (4) to lock the doors, and then the unlock end (2) (backward end) to unlock the doors. Repeat these operations 3 times and finally push the lock end of the switch.

Every time you perform the series of the above steps, the state of the theft deterrent alarm system changes from the currently selected one to the other. You can check whether the system is enabled or disabled by the number of interior buzzer beeps at the end of the procedure as follows.

System state	Number of beeps
Disabled (Mode A)	Once
Enabled (Mode D)	4 times

NOTE:
- *You cannot disable the theft deterrent alarm system while it is in the armed condition.*
- *If you fail to complete the operations in Step 2) and 3) within 15 seconds, perform the procedure again from the beginning.*
- *Check that all doors are closed when performing the above procedure.*

NOTE:
You can also switch the theft deterrent alarm system from the enabled state to the disabled state, and vice versa, via the information display setting mode. For details on how to use the information display, refer to “Information display” in “BEFORE DRIVING” section.

MEMO

INDEX

Symbols

"ENG A-STOP OFF" light 2-101
"ENG A-STOP" indicator light 2-101

Numerics

4WD warning light 2-98

A

Accelerator pedal 3-12
Accessory socket 5-8
Adding coolant 7-27
AIR BAG light 2-51, 2-93
Air cleaner 7-28
Air conditioning system 7-59
AM/FM CD PLAYER 5-40
Anti-lock brake system (ABS) 3-75, 3-77
Anti-lock brake system (ABS) warning light 2-91
Anti-theft feature 5-83
Assist grips 5-11
Audio system 5-40
Automatic headlight leveling system warning light 2-97
Automatic heating and air conditioning system (climate control) 5-32
Automatic light operation 2-104
Average fuel consumption 2-67
Average speed 2-67

B

Battery 7-39
Battery replacement 2-14, 7-39
Bluetooth® audio 5-78
Bluetooth® hands-free 5-70
Brake assist system 3-75
Brake fluid 7-33
Brake pedal 3-12, 7-34
Brake system warning light 2-90
Brakes 7-33
Braking 3-74
Brightness control 2-65
Built date 12-1
Bulb replacement 7-45

C

Cargo net hooks 5-17
Catalytic converter 4-1
Central door locking system 2-3
Changing engine oil and filter 7-23
Changing wheels 8-4
Charging light 2-93
Chassis serial number 10-1
Child restraint 2-40, 12-1
Child restraint system 2-40
Child restraint systems 2-37
Child-proof locks (rear door) 2-5
Clock 2-67, 5-15
Clutch pedal 3-12, 7-32
Coat hooks 5-11
Compact spare tire 7-38
Coolant level check 7-27
Coolant replacement 7-28
Corrosion prevention 9-1
Cruise control 3-42
Cup holder and storage area 5-13

D
Daily inspection checklist 3-1
Daytime running light (D.R.L.) system 2-107
Dead lock system 2-4
Diesel engine 1-2
Diesel particulate filter (DPF®) 3-18
Diesel particulate filter (DPF®) warning light 2-101
Door locks 2-2
Drive belt 7-20
Driver's seat belt reminder light / Front passenger's seat belt reminder light 2-93
Driving on hills 4-3
Driving on slippery roads 4-4
Driving range 2-67
E
Electric mirrors 2-20
Electric power steering light 2-95
Electric window controls 2-17
Electronic stability program (ESP®) 3-76
Emergency locking retractor (ELR) 2-30
ENG A-STOP system (engine auto stop start system) 3-29
Engine coolant 7-26
Engine hood 5-2
Engine oil and filter 7-20, 12-4
Engine oil consumption 3-2
Engine serial number 10-1
Engine switch 3-5
Engine trouble: Flooded engine 8-11
Engine trouble: Overheating 8-12
Engine trouble: Starter does not operate 8-11
ESP® OFF indicator light 2-92, 3-78
ESP® OFF switch 3-78
ESP® warning light 2-91, 3-78
Exhaust gas warning 3-1
F
Flat tire repair kit 8-5
Floor mats 5-16
Fluid control clutch 7-32
FM/LW/MW CD player 5-40
Folding rear seats 2-26
Footrest 5-15
Footwell lights 5-6
For Australia 12-1
For European countries, Mexico and South Africa 12-5
For Mexico 12-3
Four-mode 4WD system 3-23
Frame hooks 5-20
Front air bags 2-51
Front bottle holder 5-14
Front cup holders 5-14
Front fog light 7-47
Front fog light switch 2-107
Front passenger air bag deactivation system 2-60
Front position light 7-46
Front seat back pocket 5-14
Front seat heater 2-23
Front seats 2-21
Front turn signal light 7-46
Fuel consumption 10-2
Fuel filler cap 5-1
Fuel filter (diesel engine) 7-33
Fuel filter warning light (for diesel engine model) 2-100

Fuel gauge 2-64
Fuel pump labeling 12-4
Fuel recommendation 1-1, 12-3
Full wheel cover 8-5
Fuses 7-41
Fuses in engine compartment 7-41
Fuses under dashboard 7-43
G
Gasoline containing MTBE 12-4
Gasoline engine 1-1
Gasoline-ethanol blends 1-1, 12-4
Gasoline-methanol blends 1-1, 12-4
Gear oil 7-30
Gear oil change 7-32
Gear oil level check 7-31
Gearshift indicator 2-71, 3-21
Glove box 5-12
Glove box light 5-6, 7-55
Glow plug indicator light 2-100
H
Hazard warning switch 2-110
Head restraints 2-23, 2-26
Headlight leveling switch 2-108
Heated rear window switch / heated outside rearview mirror switch 2-115
Heating and air conditioning system 5-23
Heating system 5-25
Highway driving 4-3
Hill descent control indicator light 2-92
Hill descent control switch 3-80
Hill descent control system 3-79
Hill hold control system 3-82
Horn 2-115
How ABS works 3-76
I
Ignition key reminder 2-2
Ignition switch 3-3
Illumination indicator light 2-98
Immobilizer system 2-1
Immobilizer/keyless push start system warning light 2-94
Improving fuel economy 4-2
Information display 2-66, 3-43, 3-46
Inside rearview mirror 2-20
Installation of child restraint with top tether 2-47
Installation of radio frequency transmitters 5-39
Installation with ISOFIX type anchorages 2-46
Installation with lap-shoulder seat belts 2-45
Instantaneous fuel consumption 2-67
Instrument cluster 2-63
Instrument panel pocket 5-14
Interior light 5-5, 7-54
Interior workable area for engine starting 3-9
J
Jacking instructions 8-1
Jump-starting instructions 8-8
K
Keyless entry system transmitter 2-6, 2-13
Keyless push start system 3-6
Keyless push start system remote controller 2-6, 2-7
Keys 2-1
L
Lap-shoulder belt 2-30

Lap-shoulder belt with detachable connector 2-31
License plate light 7-52
Light reminder buzzer 2-106
Lighting control lever 2-102
Lighting operation 2-102
Listening to a CD 5-57
Listening to an iPod® 5-67
Listening to an MP3/WMA/AAC disc 5-60
Listening to files stored in a USB device 5-64
Listening to the radio 5-50, 5-52
Low fuel warning light 2-95
Low tire pressure warning light 2-88, 3-83
Luggage compartment 5-7
Luggage compartment board 5-18
Luggage compartment cover 5-18
Luggage compartment hooks 5-16
Luggage compartment pocket 5-15
Luggage restraint loops 5-17

M

Main beam (high beam) indicator light 2-98
Maintenance schedule 7-2
Malfunction indicator light 2-94
Manual heating and air conditioning system 5-27
Manual transaxle 3-19
Manual transaxle oil 7-30
Master warning indicator light 2-102
Mirrors 2-20

O

Odometer 2-71
Oil change request light 2-99
Oil filter replacement 7-24
Oil level check 7-21
Oil life 2-67
Oil pressure light 2-92
Open door warning light 2-94
Outside rearview mirror folding switch 2-21
Outside rearview mirrors 2-20
Overhead console 5-12

P

Parking brake 7-35
Parking brake lever 3-10
Parking sensors 3-64
Pedal 3-11
Pinching prevention function 2-19
Power-assisted brakes 3-74

R

Radar brake support system 3-47
Radar brake support system indicator light 2-96
Radar brake support system OFF indicator light 2-96
Radio antenna 5-38
RDS (Radio Data System) 5-54
Rear bottle holder 5-14
Rear combination light 7-50
Rear differential oil 7-30
Rear fog light indicator light 2-97
Rear seat belt guide 2-36
Rear seats 2-24
Rear window wiper/washer switch 2-113
Rearview camera 3-71
Refill with oil and oil leakage check 7-26
Refilling 7-22
Remote audio controls 5-81

Replacing tires and/or wheels 3-91
Reversing light 7-52
Roof rails or roof rack anchors 5-19
Running-in 4-1
S
Seat adjustment 2-21, 2-24
Seat belt inspection 2-37
Seat belt pretensioner system 2-48
Seat belt reminder 2-34
Seat belt warning 12-3
Seat belts and child restraint systems 2-28
Seat height adjustment lever 2-22
Seat position adjustment lever 2-22
Seatback angle adjustment lever 2-22, 2-25
Selection of coolant 7-26
Selection of ignition modes 3-7
Setting mode 2-71
Shopping hook 5-16
Shoulder anchor height adjuster 2-36
Side air bags and side curtain air bags 2-55
Side door locks 2-2
Side turn signal light 7-46
Spark plugs 7-29
SPECIFICATIONS 11-1
Specified oil 7-20, 12-4
Speed limiter 3-45
Speedometer 2-64
Stability control system 3-77
Starting engine
(vehicle with keyless push start system) 3-14
Starting engine
(vehicle without keyless push start system) 3-12
Steering 7-35
Stuck vehicle 4-5
Sun visor 5-4
Sunroof 5-9
Supplemental restraint system (air bags) 2-50
T
Tachometer 2-64
Tailgate 2-5
Temperature gauge 2-65
Temporary-use spare tire (compact spare tire) 12-1
Theft deterrent alarm system 12-5
Theft deterrent light 2-16
Thermometer 2-67
Tilt/telescoping steering lock lever 2-114
Tire chains 4-4
Tire changing tool 8-1
Tire inspection 7-36
Tire pressure monitoring system (TPMS) 3-83
Tire rotation 7-38
Tires 7-36
Towing 8-10
Traction control system 3-77
Trailer hitch installation points 6-5
Trailer towing 6-1
Transfer oil 7-30
Trip meter 2-71
Turn signal control lever 2-108
Turn signal indicators 2-98
Turn signal operation 2-109

U
USB socket 5-9
Using transaxle 3-19
V
Vehicle cleaning 9-2
Vehicle identification 10-1
Vehicle loading 6-1
W
Warning and indicator lights 2-88
Warning and indicator messages 2-74, 3-24, 3-70
Washing 9-4
Waxing 9-5
Windows 2-16
Windshield washer 2-113
Windshield washer fluid 7-59
Windshield wiper and washer lever 2-110
Windshield wipers 2-110
Windshield wipers with rain sensing function 2-111
Wiper blades 7-55

For countries applied for the revised edition since the third edition of UN Regulation No.10

Installation of Radio Frequency (RF) Transmitting Equipment

Your vehicle is conformed to the revised edition since the third edition of UN Regulation No.10.

When you intend to use RF transmitting equipment in your vehicle, we strongly recommend that you select the equipment which conforms to applicable rules or regulations in your country, and consult your SUZUKI dealer or qualified service technician for advice.

Table : Installing and the use of the on-board RF transmitter equipment

Frequency bands (MHz)		Antenna position at vehicle*	Maximum output power (W)
144-146	Amateur band	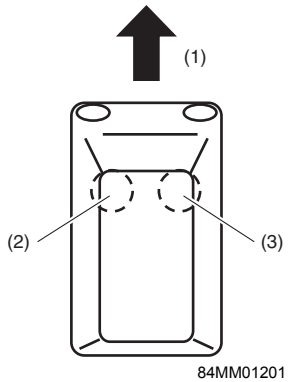	50
430-440	Amateur band		50
1200-1300	Amateur band		10

(1) Front
(2) Antenna installation position: Front left of roof
(3) Antenna installation position: Front right of roof

*The illustration is example of hatchback vehicle.

Specific conditions for installation

NOTE:

1) Antenna cable is routed as far as possible from the vehicle electronic devices and wiring harness in the vehicle.

2) Power cable of transmitter is properly connected to lead-acid battery on the vehicle.

NOTICE
Before using your vehicle, check if there is no interference to all electrical devices on your vehicle for both Standby mode and Transmitting mode of the RF transmitting equipment.

WARNING

Danger of explosion if battery is incorrectly replaced. Replace only with the same or equivalent type.

[Czech]	OMRON Automotive Electronics Co. Ltd. tímto prohlašuje, že tento [S79M0, S54P0, R79M0, R64M0, 37290-79M0, 37290-54P0, I54P0, T68L0] je ve shodě se základními požadavky a dalšími příslušnými ustanoveními směrnice 1999/5/ES.
[Danish]	Undertegnede OMRON Automotive Electronics Co. Ltd. erklærer herved, at følgende udstyr [S79M0, S54P0, R79M0, R64M0, 37290-79M0, 37290-54P0, I54P0, T68L0] overholder de væsentlige krav og øvrige relevante krav i direktiv 1999/5/EF.
[German]	Hiermit erklärt OMRON Automotive Electronics Co. Ltd., dass sich das Gerät [S79M0, S54P0, R79M0, R64M0, 37290-79M0, 37290-54P0, I54P0, T68L0] in Übereinstimmung mit den grundlegenden Anforderungen und den übrigen einschlägigen Bestimmungen der Richtlinie 1999/5/EG befindet.
[Estonian]	Käesolevaga kinnitab OMRON Automotive Electronics Co. Ltd. seadme [S79M0, S54P0, R79M0, R64M0, 37290-79M0, 37290-54P0, I54P0, T68L0] vastavust direktiivi 1999/5/EÜ põhinõuetele ja nimetatud direktiivist tulenevatele teistele asjakohastele sätetele.
[English]	Hereby, OMRON Automotive Electronics Co. Ltd., declares that this [S79M0, S54P0, R79M0, R64M0, 37290-79M0, 37290-54P0, I54P0, T68L0] is in compliance with the essential requirements and other relevant provisions of Directive 1999/5/EC.
[Spanish]	Por medio de la presente OMRON Automotive Electronics Co. Ltd. declara que el [S79M0, S54P0, R79M0, R64M0, 37290-79M0, 37290-54P0, I54P0, T68L0] cumple con los requisitos esenciales y cualesquiera otras disposiciones aplicables o exigibles de la Directiva 1999/5/CE.
[Greek]	ΜΕ ΤΗΝ ΠΑΡΟΥΣΑ OMRON Automotive Electronics Co. Ltd. ΔΗΛΩΝΕΙ ΟΤΙ [S79M0, S54P0, R79M0, R64M0, 37290-79M0, 37290-54P0, I54P0, T68L0] ΣΥΜΜΟΡΦΩΝΕΤΑΙ ΠΡΟΣ ΤΙΣ ΟΥΣΙΩΔΕΙΣ ΑΠΑΙΤΗΣΕΙΣ ΚΑΙ ΤΙΣ ΛΟΙΠΕΣ ΣΧΕΤΙΚΕΣ ΔΙΑΤΑΞΕΙΣ ΤΗΣ ΟΔΗΓΙΑΣ 1999/5/ΕΚ.
[French]	Par la présente OMRON Automotive Electronics Co. Ltd. déclare que l'appareil [S79M0, S54P0, R79M0, R64M0, 37290-79M0, 37290-54P0, I54P0, T68L0] est conforme aux exigences essentielles et aux autres dispositions pertinentes de la directive 1999/5/CE.
[Italian]	Con la presente OMRON Automotive Electronics Co. Ltd. dichiara che questo [S79M0, S54P0, R79M0, R64M0, 37290-79M0, 37290-54P0, I54P0, T68L0] è conforme ai requisiti essenziali ed alle altre disposizioni pertinenti stabilite dalla direttiva 1999/5/CE.
[Latvian]	Ar šo OMRON Automotive Electronics Co. Ltd. deklarē, ka [S79M0, S54P0, R79M0, R64M0, 37290-79M0, 37290-54P0, I54P0, T68L0] atbilst Direktīvas 1999/5/EK būtiskajām prasībām un citiem ar to saistītajiem noteikumiem.
[Lithuanian]	Šiuo OMRON Automotive Electronics Co. Ltd. deklaruoja, kad šis [S79M0, S54P0, R79M0, R64M0, 37290-79M0, 37290-54P0, I54P0, T68L0] atitinka esminius reikalavimus ir kitas 1999/5/EB Direktyvos nuostatas.
[Dutch]	Hierbij verklaart OMRON Automotive Electronics Co. Ltd. dat het toestel [S79M0, S54P0, R79M0, R64M0, 37290-79M0, 37290-54P0, I54P0, T68L0] in overeenstemming is met de essentiële eisen en de andere relevante bepalingen van richtlijn 1999/5/EG.
[Maltese]	Hawnhekk, OMRON Automotive Electronics Co. Ltd., jiddikjara li dan [S79M0, S54P0, R79M0, R64M0, 37290-79M0, 37290-54P0, I54P0, T68L0] jikkonforma mal-ħtiġijiet essenzjali u ma provvedimenti oħrajn relevanti li hemm fid-Dirrettiva 1999/5/EC.
[Hungarian]	Alulírott, OMRON Automotive Electronics Co. Ltd. nyilatkozom, hogy a [S79M0, S54P0, R79M0, R64M0, 37290-79M0, 37290-54P0, I54P0, T68L0] megfelel a vonatkozó alapvető követelményeknek és az 1999/5/EC irányelv egyéb előírásainak.
[Polish]	[OMRON Automotive Electronics Co. Ltd.] niniejszym oświadcza, że [S79M0, S54P0, R79M0, R64M0, 37290-79M0, 37290-54P0, I54P0, T68L0] spełnia zasadnicze wymogi oraz inne istotne postanowienia dyrektywy 1999/5/EC.
[Portuguese]	OMRON Automotive Electronics Co. Ltd. declara que este [S79M0, S54P0, R79M0, R64M0, 37290-79M0, 37290-54P0, I54P0, T68L0] está conforme com os requisitos essenciais e outras disposições da Directiva 1999/5/CE.
[Slovenian]	OMRON Automotive Electronics Co. Ltd. izjavlja, da je ta [S79M0, S54P0, R79M0, R64M0, 37290-79M0, 37290-54P0, I54P0, T68L0] v skladu z bistvenimi zahtevami in ostalimi relevantnimi določili direktive 1999/5/ES.
[Slovak]	OMRON Automotive Electronics Co. Ltd. týmto vyhlasuje, že [S79M0, S54P0, R79M0, R64M0, 37290-79M0, 37290-54P0, I54P0, T68L0] spĺňa základné požiadavky a všetky príslušné ustanovenia Smernice 1999/5/ES.

[Finnish]	OMRON Automotive Electronics Co. Ltd. vakuuttaa täten että [S79M0, S54P0, R79M0, R64M0, 37290-79M0, 37290-54P0, I54P0, T68L0] tyyppinen laite on direktiivin 1999/5/EY oleellisten vaatimusten ja sitä koskevien direktiivin muiden ehtojen mukainen.
[Swedish]	Härmed intygar OMRON Automotive Electronics Co. Ltd. att denna [S79M0, S54P0, R79M0, R64M0, 37290-79M0, 37290-54P0, I54P0, T68L0] står I överensstämmelse med de väsentliga egenskapskrav och övriga relevanta bestämmelser som framgår av direktiv 1999/5/EG.
[Icelandic]	Hér með lýsir OMRON Automotive Electronics Co. Ltd. yfir því að [S79M0, S54P0, R79M0, R64M0, 37290-79M0, 37290-54P0, I54P0, T68L0] er í samræmi við grunnkröfur og aðrar kröfur, sem gerðar eru í tilskipun 1999/5/EC.
[Norwegian]	OMRON Automotive Electronics Co. Ltd. erklærer herved at utstyret [S79M0, S54P0, R79M0, R64M0, 37290-79M0, 37290-54P0, I54P0, T68L0] er i samsvar med de grunnleggende krav og øvrige relevante krav i direktiv 1999/5/EF.
[Romania]	„Noi OMRON Automotive Electronics Co. Ltd. declarăm că aparatul [S79M0, S54P0, R79M0, R64M0, 37290-79M0, 37290-54P0, I54P0, T68L0] este în conformitate cu cerinţele esenţiale şi cu alte prevederi relevante ale Hotărârii Guvernului nr.88/2003 şi Directivei 1999/5/EC.
[Bulgarian]	С настоящия документOMRON Automotive Electronics Co. Ltd. декларира, че [S79M0, S54P0, R79M0, R64M0, 37290-79M0, 37290-54P0, I54P0, T68L0] е в съгласие с основните изисквания и съответните постановления на Директива 1999/5/EC.
[Turkish]	İşbu belge ile OMRON Automotive Electronics Co. Ltd., bu [S79M0, S54P0, R79M0, R64M0, 37290-79M0, 37290-54P0, I54P0, T68L0]'in 1995/5/EC Yönetmeliği esas gereksinimlerine ve diğer şartlarına uygun olduğunu beyan eder.
[Croatian]	Ovime, OMRON Automotive Electronics Co. Ltd. izjavljuje da je ovaj [S79M0, S54P0, R79M0, R64M0, 37290-79M0, 37290-54P0, I54P0, T68L0] sukladan s bitnim zahtjevima i drugim relevantnim odredbama direktive 1999/5/EZ.
[Macedonian]	Со ова, OMRON Automotive Electronics Co. Ltd. објавува дека овој [S79M0, S54P0, R79M0, R64M0, 37290-79M0, 37290-54P0, I54P0, T68L0] е во согласност со суштинските услови и други релевантни одредби од Директивата 1999/5/E3.
[Montenegrin]	Ovim, OMRON Automotive Electronics Co.Ltd., izjavljuje da je ova [S79M0, S54P0, R79M0, R64M0, 37290-79M0, 37290-54P0, I54P0, T68L0] u skladu sa osnovnim zahtjevima i drugim relevantnim odredbama Direktive 1999/5/EZ.

Request for the complete form of Declaration of Conformity

By mail: address

The contact person of radio equipment
type approval affairs (R&TTE DoC request)

OMRON Automotive Electronics Co. Ltd.
6368 Nenjo-zaka, Okusa, Komaki, Aichi 485-0802
JAPAN

By e-mail:

To:
oae_denpaninsho@oae.omron.co.jp

МОДЕЛ: S79M0

МОДЕЛ: S54P0

МОДЕЛ: R64M0

МОДЕЛ: 37290-54P0

МОДЕЛ: I54P0

И005 14

AGREE PAR L'ANRT MAROC

Type : S79M0
Numéro d'agrément : MR9235 ANRT 2014
Date d'agrément : 05/05/2014

Type : 37290-54P0
Numéro d'agrément : MR9231 ANRT 2014
Date d'agrément : 05/05/2014

Type : R64M0
Numéro d'agrément : MR9234 ANRT 2014
Date d'agrément : 05/05/2014

Type : S54P0
Numéro d'agrément : MR9233 ANRT 2014
Date d'agrément : 05/05/2014

Type : I54P0
Numéro d'agrément : MR9232 ANRT 2014
Date d'agrément : 05/05/2014

Type : T68L0
Numéro d'agrément : MR5587 ANRT 2010
Date d'agrément : 20/05/2010

DECLARATION of CONFORMITY

DECLARATION of CONFORMITY

54P00-01E

Manufacturer: Continental Automotive GmbH

Address: Seimensstrasse12

D-93055 Regensburg

Germany

Radio Transmitter: *S180052024* and Radio Receiver: *40398036*

cs Česky [Czech]	*Continental* tímto prohlašuje, že tento *Radio Transmitter and Receiver* je ve shodě se základními požadavky a dalšími příslušnými ustanoveními směrnice 1999/5/ES.
da Dansk [Danish]	Undertegnede *Continental* erklærer herved, at følgende udstyr *Radio Transmitter and Receiver* overholder de væsentlige krav og øvrige relevante krav i direktiv 1999/5/EF.
de Deutsch [German]	Hiermit erklärt *Continental,* dass sich das Gerät *Radio Transmitter and Receiver* in Übereinstimmung mit den grundlegenden Anforderungen und den übrigen einschlägigen Bestimmungen der Richtlinie 1999/5/EG befindet.
et Eesti [Estonian]	Käesolevaga kinnitab *Continental* seadme *Radio Transmitter and Receiver* vastavust direktiivi 1999/5/EÜ põhinõuetele ja nimetatud direktiivist tulenevatele teistele asjakohastele sätetele.
en English	Hereby, *Continental* declares that this *Radio Transmitter and Receiver* is in compliance with the essential requirements and other relevant provisions of Directive 1999/5/EC.
es Español [Spanish]	Por medio de la presente *Continental* declara que el *Radio Transmitter and Receiver* cumple con los requisitos esenciales y cualesquiera otras disposiciones aplicables o exigibles de la Directiva 1999/5/CE.
el Ελληνική [Greek]	ΜΕ ΤΗΝ ΠΑΡΟΥΣΑ *Continental* ΔΗΛΩΝΕΙ ΟΤΙ*Radio Transmitter and Receiver* ΣΥΜΜΟΡΦΩΝΕΤΑΙ ΠΡΟΣ ΤΙΣ ΟΥΣΙΩΔΕΙΣ ΑΠΑΙΤΗΣΕΙΣ ΚΑΙ ΤΙΣ ΛΟΙΠΕΣ ΣΧΕΤΙΚΕΣ ΔΙΑΤΑΞΕΙΣ ΤΗΣ ΟΔΗΓΙΑΣ 1999/5/ΕΚ.
fr Français [French]	Par la présente *Continental* déclare que l'appareil *Radio Transmitter and Receiver* est conforme aux exigences essentielles et aux autres dispositions pertinentes de la directive 1999/5/CE.
it Italiano [Italian]	Con la presente *Continental* dichiara che questo *Radio Transmitter and Receiver* è conforme ai requisiti essenziali ed alle altre disposizioni pertinenti stabilite dalla direttiva 1999/5/CE.
lv Latviski [Latvian]	Ar šo *Continental* deklarē, ka *Radio Transmitter and Receiver* atbilst Direktīvas 1999/5/EK būtiskajām prasībām un citiem ar to saistītajiem noteikumiem.

lt Lietuvių [Lithuanian]	Šiuo *Continental* deklaruoja, kad šis *Radio Transmitter and Receiver* atitinka esminius reikalavimus ir kitas 1999/5/EB Direktyvos nuostatas.
nl Nederlands [Dutch]	Hierbij verklaart *Continental* dat het toestel *Radio Transmitter and Receiver* in overeenstemming is met de essentiële eisen en de andere relevante bepalingen van richtlijn 1999/5/EG.
mt Malti [Maltese]	Hawnhekk, *Continental*, jiddikjara li dan *Radio Transmitter and Receiver* jikkonforma mal-ħtiġijiet essenzjali u ma provvedimenti oħrajn relevanti li hemm fid-Dirrettiva 1999/5/EC.
hu Magyar [Hungarian]	Alulírott, *Continental* nyilatkozom, hogy a *Radio Transmitter and Receiver* megfelel a vonatkozó alapvető követelményeknek és az 1999/5/EC irányelv egyéb előírásainak.
pl Polski [Polish]	Niniejszym *Continental* oświadcza, że *Radio Transmitter and Receiver* jest zgodny z zasadniczymi wymogami oraz pozostałymi stosownymi postanowieniami Dyrektywy 1999/5/EC.
pt Português [Portuguese]	*Continental* declara que este *Radio Transmitter and Receiver* está conforme com os requisitos essenciais e outras disposições da Directiva 1999/5/CE.
sl Slovensko [Slovenian]	*Continental* izjavlja, da je ta *Radio Transmitter and Receiver* v skladu z bistvenimi zahtevami in ostalimi relevantnimi določili direktive 1999/5/ES.
sk Slovensky [Slovak]	*Continental* týmto vyhlasuje, že *Radio Transmitter and Receiver* spĺňa základné požiadavky a všetky príslušné ustanovenia Smernice 1999/5/ES.
fi Suomi [Finnish]	*Continental* vakuuttaa täten että *Radio Transmitter and Receiver* tyyppinen laite on direktiivin 1999/5/EY oleellisten vaatimusten ja sitä koskevien direktiivin muiden ehtojen mukainen.
sv Svenska [Swedish]	Härmed intygar *Continental* att denna *Radio Transmitter and Receiver* står I överensstämmelse med de väsentliga egenskapskrav och övriga relevanta bestämmelser som framgår av direktiv 1999/5/EG.
Íslenska [Icelandic]	Hér með lýsir *Continental* yfir því að *Radio Transmitter and Receiver* er í samræmi við grunnkröfur og aðrar kröfur, sem gerðar eru í tilskipun 1999/5/EC.
no Norsk [Norwegian]	*Continental* erklærer herved at utstyret *Radio Transmitter and Receiver* er i samsvar med de grunnleggende krav og øvrige relevante krav i direktiv 1999/5/EF.

54P00-01E

EU-Konformitätserklärung

EC-Declaration of Conformity
Déclaration de Conformité de la CE
Dichiarazione di conformità CE

Hersteller / Verantwortliche Person: **Robert Bosch GmbH , Juergen Hildebrandt**
Manufacturer / responsible person
Constructeur / personne en charge
Costruttore / parte notificante

Adresse / *Address/Adresse / Indirizzo*: **Daimlerstrasse 6**
71229 Leonberg
Germany

Erklärt, dass das Produkt / *Declares that the product / Déclare, que le produit / si dichiara che il prodotto*:

Typ / *type / tipo*: **MRR1Plus**

Modell / *model / modèle / modello*: **see above**

Verwendungszweck: **motion detector for RTTT application**
Intended use / Utilisation prévue / uso previsto

bei bestimmungsgemäßer Verwendung den grundlegenden Anforderungen gemäß Artikel 3 der R&TTE-Richtlinie 1999/5/EG entspricht und dass die folgenden Normen angewandt wurden:
complies with the essential requirements of Article 3 of the R&TTE 1999/5/EC Directive, if used for its intended use and that the following standards has been applied:
répond aux exigences essentielles du Article 3 de la directive R&TTE 1999/5/EC, prévu qu'il soit utilisé selon sa destination, et qu'il répond aux standards suivants:
soddisfa tutti i requisiti secondo l'art. 3 della direttiva R&TTE 1999/5/EC qualora venga utilizzato per l'uso previsto e che le seguenti norme siano applicate:

1 Gesundheit (Artikel 3.1.a der R&TTE-Richtlinie)
Health (Article 3.1.a of the R&TTE Directive)
Santé (Article 3.1.a de la Directive R&TTE)
Salute (Articolo.3.1 a della Direttiva R&TTE)

angewendete Norm(en) **IEC 62479** Ausgabe **2007**
applied standard(s) / standard(s) appliqué(s) / norma(e) applicata(e) *issue/édition/pubblicato*

2 Sicherheit (Artikel 3.1.a der R&TTE-Richtlinie)
Safety (Article 3.1.a of the R&TTE Directive)
Sécurité électrique (Article 3.1.a de la Directive R&TTE)
Sicurezza elettrica (Articolo 3.1 a della Direttiva R&TTE)

angewendete Norm(en) **IEC 60950-1; Am1** Ausgabe **2005**
applied standard(s) / standard(s) appliqué(s) / norma(e) applicata(e) *issue/édition /pubblicato*

3 Elektromagnetische Verträglichkeit (Artikel 3.1.b der R&TTE-Richtlinie)
Electromagnetic compatibility (Article 3.1.b of the R&TTE Directive)
Compatibilité Electromagnétique(Article 3.1.b de la Directive R&TTE)
Compatibilità Elettromagnetica (Articolo 3.1 b della Direttiva R&TTE)

angewendete Norm(en) **EN 301 489 -1 , EN 301 489-3** Ausgabe **2011 and 2012**
applied standard(s) / standard(s) appliqué(s) / norma(e) applicata(e) *issue/édition/pubblicato*

4 Effiziente Nutzung des Funkfrequenzspektrums (Artikel 3.2 der R&TTE-Richtlinie)
efficient use of the radio frequency spectrum (Article 3.2 of the R&TTE Directive)
Efficacité du spectre radio (Article 3.2 de la Directive R&TTE)
Effettivo uso dello spettro radio (Articolo 3.2 della Direttiva R&TTE)

angewendete Norm(en) **EN 301 091-1 V1.3.3, EN 301 091-2 V1.3.2** Ausgabe **2006-11**
applied standard(s) / standard(s) appliqué(s) / norma(e) applicata(e) *issue/édition/ pubblicato*

Leonberg 07.02.2013
(Ort und Datum der Konformitätserklärung)
(Place and date of the declaration of conformity)
(lieu et date de la déclaration de conformité)
Luogo e data della dichiarazione di conformità)

(Name und Unterschrift)
(Name and signature)
(Nom et signature)
(Nome, cognome e firma)

ROBERT BOSCH GMBH
Geschäftsbereich CC
Fahrerassistenzsysteme
Postfach 1661 D-71226 Leonberg
Daimlerstr. 6 D-71229 Leonberg

Declaration of Conformity

CE

1. Manufacturer/s :
a) Model/s : 81A

RIKENKAKI CO., LTD.
5-6-12 Chiyoda, Sakado-shi, Saitama 350-0214 JAPAN

b) Model/s : 55L, 72K, 54L, 77K

CHANGZHOU RIKENSEIKO MACHINERY CO., LTD.
No. 1903 Zhongwu Ave. Zhonglou Changzhou, Jiangsu CHINA

2. Legal person authorised to compile the technical file :
Suzuki International Europe GmbH
Service Automobile
Suzuki-Allee 7
64625 Bensheim GERMANY

3. Product : Pantograph jack

4. Function : Lifting motor vehicle

5. Model	6. Type
55L	Suzuki Type-Ⅰ
72K	Suzuki Type-Ⅱ
54L	Suzuki Type-Ⅲ
81A	Suzuki Type-Ⅳ
77K	Suzuki Type-Ⅴ

7. The undersigned, Mr. Ryoichi Hiraki, representing the manufacturers, herewith declares that the machinery described below fulfils all the relevant provisions of :
・The EC-directive 2006/42/EC on machinery

8. References to harmonized standards : EN1494:2000+A1:2008

9. Other standards or specifications : —

10. Date : 7 Aug, 2013

11. Signature : Ryoichi Hiraki

12. Name : Ryoichi Hiraki

13. Position : President

Note: This declaration becomes invalid, if technical or operational modifications are introduced without the manufacturers consent.

Български (Bulgarian)

Декларация за съответствие

1. Производител(и):
а) Модел(и) б) Модел(и)
2. Юридическо лице, упълномощено да състави техническия файл
3. Продукт : Пантографен крик
4. Функция : Повдигане на автомобил
5. Модел
6. Тип
7. Долуподписаният, г-н Риочи Хираки, представящ производителите, с настоящото декларира, че описаното по-долу механично оборудване отговаря на всички приложими изисквания на:
• Директива 2006/42/ЕО относно машините
8. Справки с хармонизирани стандарти
9. Други стандарти и спецификации
10. Дата
11. Подпис
12. Име
13. Длъжност : Президент

Hrvatski (Croatian)

Izjava o sukladnosti

1. Proizvođač/i
a) Model/i b) Model/i
2. Pravna osoba ovlaštena za sastavljanje tehničkog lista
3. Proizvod : pantografska dizalica
4. Funkcija : podizanje motornih vozila
5. Model
6. Tip
7. Ja, g. Ryoichi Hiraki, kao predstavnik proizvođača, ovime izjavljujem da stroj opisan u nastavku ispunjava sve relevantne odredbe:
• Direktive EZ 2006/42/EZ o strojevima
8. Upućivanje na usklađene norme
9. Druge norme ili specifikacije
10. Datum
11. Potpis
12. Ime i prezime
13. Funkcija : Predsjednik

Česky (Czech)

Prohlášení o shodě

1. Výrobce/ci
a) Model/y b) Model/y
2. Oprávněná osoba, která smí vyhotovit technický soubor
3. Výrobek : Zvedák
4. Funkce : Zvedání motorových vozidel
5. Model
6. Typ
7. Níže podepsaná osoba, p. Ryoichi Hiraki, jako zástupce výrobců tímto prohlašuje, že níže uvedené zařízení splňuje všechna nezbytná ustanovení:
• Směrnice ES 2006/42/ES o strojírenství
8. Odkazy na harmonizované normy
9. Další normy nebo parametry
10. Datum
11. Podpis
12. Jméno
13. Funkce : Prezident

Dansk (Danish)

Overensstemmelseserklæring

1. Fabrikant(er)
a) Model(ler) b) Model(ler)
2. Juridisk person med bemyndigelse til at samle det tekniske dossier
3. Produkt : Saksedonkraft
4. Funktion : Løft af motorkøretøj
5. Model
6. Type
7. Undertegnede, Hr. Ryoichi Hiraki, der repræsenterer fabrikanterne, erklærer hermed, at den herunder beskrevne maskine er i overensstemmelse med de relevante bestemmelser i:
• EF-direktiv 2006/42/EF om maskiner
8. Henvisninger til harmoniserede standarder
9. Øvrige standarder eller specifikationer
10. Dato
11. Underskrift
12. Navn
13. Stilling : Direktør

Nederlands (Dutch)

Conformiteitsverklaring

1. Fabrikant(en)
a) Model(len) b) Model(len)
2. Persoon die wettelijk gemachtigd is om het technische dossier samen te stellen
3. Product : Schaarkrik
4. Functie : Opkrikken van auto
5. Model
6. Type
7. Ondergetekende, Mr. Ryoichi Hiraki, hiertoe door de fabrikanten gemachtigd, verklaart dat de uitrusting die hieronder staat beschreven voldoet aan alle relevante voorwaarden van:
• de EG machinerichtlijn 2006/42/EC
8. Referenties naar de geharmoniseerde normen
9. Andere normen of specificaties
10. Datum
11. Handtekening
12. Naam
13. Functie : President

Eesti (Estonian)

Vastavusdeklaratsioon

1. Tootja/d
a) Mudel/id b) Mudel/id
2. Tehnilise dokumentatsiooni koostamise õigusega juriidiline isik
3. Toode : pantograaftungraud
4. Funktsioon : mootorsõiduki tõstmine
5. Mudel
6. Tüüp
7. Allakirjutanu, Hr. Ryoichi Hiraki, kes esindab tootjat, kinnitab käesolevaga, et allpool kirjeldatud seade vastab kõikidele asjakohastele direktiivide asjakohastele sätetele:
• EÜ masinadirektiiv 2006/42/EÜ
8. Viited ühtlustatud standarditele
9. Muud standardid või spetsifikatsioonid
10. Kuupäev
11. Allkiri
12. Nimi
13. Ametikoht : president

Suomi (Finnish)

Vaatimustenmukaisuusilmoitus

1. Valmistaja(t)
a) Malli(t) b) Malli(t)
2. Henkilö, joka on valtuutettu kokoamaan tekninen eritelmä
3. Tuote : Saksitunkki
4. Toiminta : Moottoriajoneuvon nosto
5. Malli
6. Tyyppi
7. Allekirjoittanut, herra Ryoichi Hiraki, valmistajan edustaja, ilmoittaa täten, että alla kuvattu kone täyttää seuraavien direktiivien vaatimukset:
• EY-konedirektiivi 2006/42/EY
8. Käytetyt yhdenmukaistetut standardit
9. Muut käytetyt standardit ja spesifikaatiot
10. Aika
11. Allekirjoitus
12. Nimi
13. Asema : Presidentti

Français (French)

Déclaration de conformité

1. Fabricant(s)
a) Modèle(s) b) Modèle(s)
2. Personne légalement autorisée à compiler le dossier technique
3. Produit : Cric à parallélogramme
4. Fonction : Lever un véhicule motorisé
5. Modèle
6. Type
7. Je soussigné, M. Ryoichi Hiraki, représentant des fabricants, déclare par les présentes que le dispositif ci-dessous répond à toutes les dispositions correspondantes de :
• La directive européenne 2006/42/CE relative aux machines
8. Références à des normes harmonisées
9. Autres normes ou spécifications
10. Date
11. Signature
12. Nom
13. Fonction : Président

Deutsch (German)

Konformitätserklärung

1. Hersteller
a) Modell(e) b) Modell(e)
2. Verantwortlicher für die Zusammenstellung der technischen Unterlagen
3. Produkt : Scherenheber
4. Funktion : Hebemotor Fahrzeug
5. Modell
6. Typ
7. Der Unterzeichnete, Herr Ryoichi Hiraki, Vertreter des Herstellers, erklärt hiermit, dass die im Folgenden beschriebene Maschine die relevanten Vorgaben der Folgenden Normen erfüllt:
• EG-Maschinenrichtlinie 2006/42/EG
8. Anlehnung an harmonisierte Normen
9. Sonstige Normen oder Spezifikationen
10. Datum
11. Unterschrift
12. Name
13. Position : Direktor

Ελληνικά (Greek)

Δήλωση Γνιστότητας

1. Κατασκευαστής/-ές
   α) Μοντέλο/-α β) Μοντέλο/-α
2. Νομικό πρόσωπο εξουσιοδοτημένο να συντάξει το τεχνικό αρχείο
3. Προϊόν : Γρύλος παντογράφου
4. Λειτουργία : Ανύψωση μηχανοκίνητου οχήματος
5. Μοντέλο
6. Είδος
7. Ο υπογράφων, κ. Ryoichi Hiraki, εκπροσωπώντας τους κατασκευαστές, δηλώνει δια του παρόντος ότι τα μηχανήματα που περιγράφονται κατωτέρω πληρούν όλες τις σχετικές διατάξεις της:
   • Ευρωπαϊκής Οδηγίας 2006/42/ΕΚ σχετικά με τα μηχανήματα
8. Αναφορές σε εναρμονισμένα πρότυπα
9. Άλλα πρότυπα ή προδιαγραφές
10. Ημερομηνία
11. Υπογραφή
12. Ονομα
13. Θέση : Πρόεδρος

Magyar (Hungarian)

Megfelelőségi nyilatkozat

1. Gyártó(k)
   a) Modell(ek) b) Modell(ek)
2. A műszaki fájl összeállításáért felelős jogi személy
3. Termék : Pantograph emelő
4. Funkció : Motoros járművek emelése
5. Modell
6. Típus
7. Alulírott, Mr. Ryoichi Hiraki a gyártók képviseletében ezennel kijelentem, hogy az alább leírt gép megfelel az alábbi rendeletek minden követelményének:
   • Az Európai Közösség 2006/42/EK irányelve a gépekről
8. Hivatkozások harmonizált szabványokra
9. Egyéb szabványok vagy specifikációk
10. Dátum
11. Aláírás
12. Név
13. Beosztás : Elnök

Italiano (Italian)

Dichiarazione di Conformità

1. Fabbricante/i
   a) Modello/i b) Modello/i
2. Persona giuridica autorizzata a compilare il fascicolo tecnico
3. Prodotto : Cric a pantografo
4. Funzione : Sollevamento di veicolo a motore
5. Modello
6. Tipo
7. Il sottoscritto, Ryoichi Hiraki, che rappresenta i produttori, dichiara con la presente che la macchina descritta qui sotto soddisfa tutti i requisiti pertinenti di:
   • Direttiva CE 2006/42/CE relativa alle macchine
8. Norme armonizzate di riferimento
9. Altre norme o specifiche
10. Data
11. Firma
12. Nome
13. Posizione : Presidente

Latviešu (Latvian)

Atbilstības deklarācija

1. Ražotājs(-i)
   a) Modelis(-ļi) b) Modelis(-ļi)
2. Juridiskā persona, kurai ir atļauts sagatavot tehnisko datni
3. Produkts : Pantográfa domkrats
4. Funkcija : Mehānisko transportlīdzekļu pacelšana
5. Modelis
6. Tips
7. Apakšā parakstījies Rioiši Hiraki (Ryoichi Hiraki), kas pārstāv ražotājus, ar šo dokumentu paziņo, kas turpmāk aprakstītā iekārta atbilst visiem paredzētajiem nosacījumiem:
   • EK Direktīva Nr. 2006/42/EK par mašīnām;
8. atsauces uz saskaņotajiem standartiem;
9. citi standarti vai specifikācijas.
10. Datums
11. Paraksts
12. Vārds
13. Amats : Prezidents

Lietuviškai (Lithuanian)

Atitikties deklaracija

1. Gamintojas (-ai):
   a) Modelis (-iai) b) Modelis (-iai)
2. Juridinis asmuo, įgaliotas ruošti techninį dokumentą
3. Gaminys : trapecinis domkratas
4. Funkcija : motorinių transporto priemonių kėlimas
5. Modelis
6. Tipas
7. Žemiau pasirašęs, P. Ryoichi Hiraki, atstovaujantis gamintojus, šiuo pareiškia, kad žemiau aprašyti įrenginiai atitinka visas susijusias šių teisės aktų nuostatas:
   • EB direktyva 2006/42/EB dėl mašinų
8. Nuorodos į harmonizuotus standartus
9. Kiti standartai arba specifikacijos
10. Data
11. Parašas
12. Vardas, pavardė
13. Pareigos : prezidentas

Polski (Polish)

Deklaracja zgodności

1. Producent/producenci:
   a) Model(e) b) Model(e)
2. Osoba prawna upoważniona do sporządzenia dokumentacji technicznej
3. Produkt : podnośnik trapezowy
4. Funkcja : podnoszenie pojazdów mechanicznych
5. Model
6. Typ
7. Niżej podpisany, reprezentujący producentów Ryoichi Hiraki niniejszym oświadcza, że opisane poniżej urządzenie spełnia wszystkie stosowne wymogi:
   • Dyrektywy maszynowej 2006/42/WE
8. Odniesienia do norm zharmonizowanych
9. Inne normy lub specyfikacje
10. Data
11. Podpis
12. Imię i nazwisko
13. Stanowisko : Prezes

Português (Portuguese)

Certificado de Conformidade

1. Fabricante/s
   a) Modelo/s b) Modelo/s
2. Pessoa legalmente autorizada a redigir a ficha técnica
3. Produto : Macaco Pantográfico
4. Função : elevar veículos a motor
5. Modelo
6. Tipo
7. O representante dos fabricantes, Sr. Ryoichi Hiraki, certifica pela presente que o equipamento aqui identificado está conforme e satisfaz todos os requisitos de acordo com:
   • A Diretiva CE 2006/42/CE no âmbito dos Equipamentos Mecânicos
8. Referências de normas aplicáveis
9. Outras normas ou especificações
10. Data
11. Assinatura
12. Nome
13. Encargo : O Diretor Geral

Română (Romanian)

Declarație de conformitate

1. Fabricant/Fabricanți
   a) Model/e b) Model/e
2. Persoana juridică autorizată să redacteze dosarul tehnic
3. Produs : Cric manual
4. Funcție : Ridicarea vehiculului motorizat
5. Model
6. Tip
7. Subsemnatul, dl. Ryoichi Hiraki, reprezentant al fabricanților, declar prin prezenta faptul că echipamentul tehnic descris mai jos respectă cerințele esențiale din:
   • Directiva CE 2006/42/CE privind echipamentele tehnice
8. Trimiteri la standardele armonizate
9. Alte standarde sau specificații
10. Data
11. Semnătura
12. Nume
13. Funcția : Președinte

Slovensky (Slovak)

Vyhlásenie o zhode

1. Výrobca/Výrobcovia:
   a) Model/Modely b) Model/Modely
2. Právnická osoba oprávnená vypracovať súbor technickej dokumentácie
3. Výrobok : Pantografický zdvihák
4. Funkcia : Zdvihanie motorového vozidla
5. Model
6. Typ
7. Dolu podpísaný zástupca výrobcov, pán Ryoichi Hiraki, týmto prehlasuje, že toto popísané strojné zariadenie spĺňa všetky príslušné ustanovenia:
   • smernice o strojoch a strojných zariadeniach č. 2006/42/ES.
8. Odkazy na harmonizované normy
9. Ďalšie technické normy alebo špecifikácie
10. Dátum
11. Podpis
12. Meno
13. Funkcia : prezident

Slovensko (Slovene)

Izjava o skladnosti

1. Proizvajalec/i
   a) Model/i b) Model/i
2. Pravna oseba pooblaščena za sestavljanje tehnične datoteke
3. Izdelek : Pantografska dvigalka
4. Namen : Dvigovanje motornega vozila
5. Model
6. Tip
7. Spodaj podpisani g. Ryoichi Hiraki, kot predstavnik proizvajalca s tem izjavlja, da spodaj opisana naprava izpolnjuje vse zahtevane predpise:
   • Direktivo ES 2006/42/ES o strojih
8. Sklicevanje na usklajene standarde
9. Drugi standardi in specifikacije
10. Datum
11. Podpis
12. Ime
13. Položaj : Predsednik

Español (Spanish)

Declaración de conformidad

1. Fabricante(s)
   a) Modelo(s) b) Modelo(s)
2. Persona legalmente autorizada para constituir el expediente técnico
3. Producto : gato elevador de tijera
4. Función : elevación de vehículo de motor
5. Modelo
6. Tipo
7. El abajo firmante, Sr. Ryoichi Hiraki, en representación de los fabricantes, declara por la presente que la máquina que se describe a continuación cumple todas las disposiciones pertinentes de:
   • La Directiva europea 2006/42/CE relativa a las máquinas
8. Las referencias a las normas armonizadas
9. Otras normas o especificaciones
10. Fecha
11. Firma
12. Nombre
13. Cargo : Presidente

Svenska (Swedish)

Konformitetsförklaring

1. Tillverkare
   a) Modell/er b) Modell/er
2. Juridisk person som är behörig att fylla i den tekniska filen
3. Produkt : Pantografdomkraft
4. Funktion : Lyfta motorfordon
5. Modell
6. Typ
7. Undertecknade, Ryoichi Hiraki, som företräder tillverkarna, förklarar härmed att maskinen som beskrivs nedan uppfyller alla relevanta bestämmelser i:
   • EG-direktivet 2006/42/EG om maskiner
8. Referenser till harmoniserade standarder
9. Andra standarder eller specifikationer
10. Datum
11. Underskrift
12. Namn
13. Titel : VD

Türkçe (Turkish)

Uygunluk Beyanı

1. Üreticiler
   a) Modeller b) Modeller
2. Teknik dosyayı düzenlemeye yetkili tüzel kişi
3. Ürün : Kriko
4. İşlev : Motorlu araç kaldırma
5. Model
6. Tip
7. Üreticileri temsil eden ve aşağıda imzası bulunan Bay Ryoichi Hiraki iş bununla yukarıda tanımlanan makinenin,
   • AT 2006/42/EC Makine direktifinin tüm şartlarını karşıladığını beyan eder
8. Uyumlandırılmış standartlara olan referanslar
9. Diğer standart veya şartnameler
10. Tarih
11. İmza
12. Adı ve Soyadı
13. Konumu : Başkan

PANTOGRAPH JACK
INSTRUCTION MANUAL

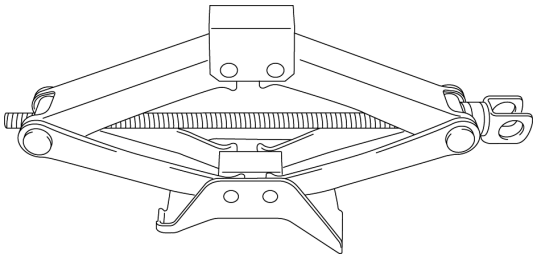

Manufacturers:

RIKENKAKI CO., LTD.
5-6-12 Chiyoda, Sakado-shi, Saitama, 350-0214 Japan
Tel: 049-248-1661
Fax:049-284-4340

CHANGZHOU RIKENSEIKO MACHINERY CO., LTD.
No. 1903 Zhongwu Ave. Zhonglou Changzhou, Jiangsu CHINA
Tel: 0519-327-5284
Fax:0519-327-0811

Please read this INSTRUCTION MANUAL before operation!

Norm: EN 1494:2000+A1:2008

Attention and warning

- The JACK may be used only for replacing tyres, not for any other purpose.
- Use the JACK no more than 50 times.
- No-loading person.
- Never get under vehicle raised by jack.
- Use of defective or inadequately maintained jacks is extremely dangerous.

Meaning of pictogram on caution label

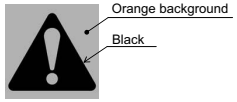

This symbol indicates a potential hazard that could result in death or serious injury.

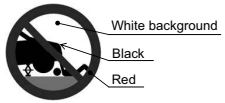

This symbol indicates you never get under the vehicle when it is supported by the jack.

Parts name of Pantograph Jack

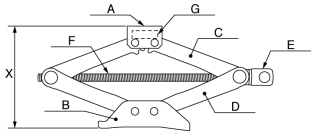

FIG 1

A : TOPHOLDER
B : BASE
C : UPPER ARM
D : LOWER ARM
E : HANDLE JOINT
F : JACK SCREW
G : NOMINAL LOAD (t)
H_1 : MINIMUM HEIGHT (mm)
H_2 : MAXIMUM HEIGHT (mm)
H_3 : PERFORMANCE ASSURANCE HEIGHT (mm)
X : JACK HEIGHT (mm)
Y : LOAD (t)
M : MODEL
T : TYPE

Technical Data and Application

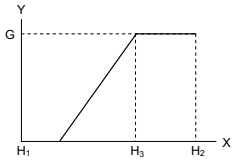

M	T	G	H_1	H_2	H_3
55L	Suzuki Type- Ⅰ	0.95	89	327	208
72K	Suzuki Type- Ⅱ	0.95	70	281	175.5
54L	Suzuki Type- Ⅲ	0.95	80	318	199
81A	Suzuki Type- Ⅳ	1.0	85.5	344	214.75
77K	Suzuki Type- Ⅴ	1.25	100.8	436.3	268.55

FIG 2

No-Using Conditions

- When temperature under -40℃.
- On miring or sand ground.
- On big gradient road.
- In extreme nature condition: rainstorm, typhoon, cyclone, snowstorm, thunder-storm, etc.
- Loading dangerous heavy, for instance: melted metal, acidity substance, radioactivity substance or specially crisp goods.
- Contact with hood directly.
- Using on boat.
- The ground with difference in level.

Operation instructions

Whenever a wheel is changed, always remove any corrosion that may be present on inside of wheel and wheel mounting surface on vehicle.

Details:

Please operate according to the “operation instructions”.

Operate the jack on the level ground while checking the jack and the load.

Mustn’t operate under raising load, unless the load is fastened surely.

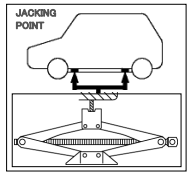

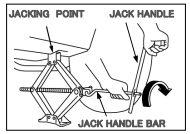

- Park the car on the flat, level ground and apply the brake firmly.
- Set transmission in “reverse”(automatic transmission in “park”).
- Turn on the hazard warning flasher.
- Remove jacking tools and spare tire from stowage area.
- Block front and rear of wheel diagonally opposite wheel being removed before operating jack.
- Loosen, but do not remove wheel nuts by turning wrench counter clockwise.
- Raise jack until jack-head groove fits boss of frame see illustrations.
- Operate jack with slow, smooth motion, using jack handle.
- Raise vehicle so an inflated tire will just clear surface, remove nuts and wheel.
- Install wheel, then slightly tighten each nut, wheel must be seated on hub.
- Lower vehicle, and fully tighten wheel nuts in across-cross sequence by turning wrench clockwise.

Maintenance

- Please prevent the JACK SCREW from accretion of dirt.
- Check the nameplate, keep the shape same as original.
- No-rejigger the jack’s construction privately.
- After any use, consult immediately your Suzuki Dealer or Service Partner for inspection and maintenance of the jack.
- If the label (sticker) is damaged, please consult your Suzuki Dealer or Service Partner.

Български (Bulgarian)

ПАНТОГРАФЕН КРИК
РЪКОВОДСТВО ЗА ЕКСПЛОАТАЦИЯ

CE

Производител:

RIKENKAKI CO., LTD.
5-6-12 Chiyoda, Sakado-shi, Saitama, 350-0214 Япония
Тел: 049-248-1661
Факс:049-284-4340

CHANGZHOU RIKENSEIKO MACHINERY CO., LTD.
No. 1903 Zhongwu Ave. Zhonglou Changzhou, Jiangsu КИТАЙ
Тел: 0519-327-5284
Факс:0519-327-0811

Моля, прочетете това РЪКОВОДСТВО ЗА ЕКСПЛОАТАЦИЯ преди работа!

Стандарт: EN 1494:2000+A1:2008

Обозначения за повишено внимание и предупреждения

- КРИКЪТ може да се използва само за смяна на гуми, а не за други цели.
- Използвайте КРИКА не повече от 50 пъти.
- Не повдигайте автомобил, в който се намират хора.
- Никога не влизайте под автомобил, повдигнат на крик.
- Използването на повредени или неправилно поддържани крикове е изключително опасно.

Значение на пиктограмите на предупредителните етикети

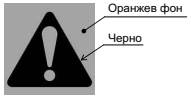

Този символ означава потенциална опасност, която може да доведе до смърт или сериозно нараняване.

Този символ показва, че никога не трябва да влизате под автомобил, повдигнат на крик.

Наименования на частите на пантографен крик

Виж FIG. 1. на страницата на английски език

Технически характеристики и приложение

Виж FIG. 2. на страницата на английски език.

A	: ГОРЕН ДЪРЖАЧ	F	: ВИНТ НА КРИКА	X	: ВИСОЧИНА НА КРИКА (мм)
B	: ОСНОВА	G	: НОМИНАЛЕН ПОДЕМЕН КАПАЦИТЕТ (т)	Y	: ПОДЕМЕН КАПАЦИТЕТ (т)
C	: ГОРНО РАМО	H_1	: МИНИМАЛНА ВИСОЧИНА (мм)	M	: МОДЕЛ
D	: ДОЛНО РАМО	H_2	: МАКСИМАЛНА ВИСОЧИНА (мм)	T	: ТИП
E	: РЪКОХВАТКА	H_3	: РАБОТНА ВИСОЧИНА НА КРИКА (мм)		

Условия, в които не трябва да се използва

- При температури под -40°C.
- Ввърху неустойчив или песъчлив терен.
- Ввърху наклонен път.
- В екстремни природни условия: пороен дъжд, тайфуни, циклони, силен снеговалеж, гръмотевична буря и др.
- Опасен товар, например: стопен метал, разяждащи киселинни или радиоактивни вещества или особено крехки товари.
- В пряк контактс купето.
- Използване на лодка.
- Върху наклонен терен с разлика в нивата.

Инструкции за работа

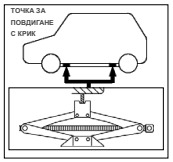

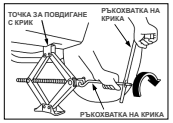

При смяна на колело винаги отстранявайте следите от корозия, натрупали се от вътрешната страна на джантата и монтажната повърхност на главината на колелото.
Информация:
Моля, работете в съответствие с "Инструкции за експлоатация".
Поставете крика върху равна повърхност и следете както крика, така и товара.
Не работете под повдигания товар, освен ако товарът не е устойчиво закрепен.

- Паркирайте автомобила на равна, хоризонтална повърхност и изтеглете докрай ръчната спирачка.
- Включете на „задна" предавка (при автоматични трансмисии, поставете в положение „Park").
- Включете предупредителните сигнални светлини.
- Извадете крика и принадлежностите му и резервната гума отмястото за съхранение.
- Преди да работите с крика, блокирайте предното и задно колело по диагонал и от противоположната страна на колелото, което ще сваляте.
- Разхлабете, без да развивате докрай, колесните гайки със завъртане на ключа обратно на часовника.
- Повдигнете крика, докато канала върху главата на крика обхване изпъкналата част на рамата – виж илюстрацията.
- Работете с крика с бавни, плавни движения, като използвате ръкохватката.
- Повдигнете автомобила, така че надутата гума едва да се отлепи от повърхността, след което развийте гайките и свалете колелото.
- Поставете колелото и леко завийте всяка от гайките, колелото трябва добре да легне върху главината.
- Спуснете автомобила и затегнете докрай колесните гайки в последователност на кръст, като въртите ключа по часовника.

Поддръжка

- Не допускайте натрупване на замърсявания върху ВИНТА НА КРИКА .
- Проверете данните върху табелката с технически характеристики, поддържайте крика в изправно състояние.
- Не предприемайте опити сами да преправяте конструкцията на крика.
- След всяко използване незабавно се свържете с Вашия Suzuki дилър или сервизен партньор за преглед и поддръжка на крика.
- Ако етикетът (стикерът) е повреден, моля свържете се с Вашия Suzuki дилър или сервизен партньор.

Hrvatski (Croatian)

Pantografska dizalica
UPUTE ZA UPORABU

CE

Proizvođači:

RIKENKAKI CO., LTD.
5-6-12 Chiyoda, Sakado-shi, Saitama, 350-0214 Japan
Tel: 049-248-1661
Faks:049-284-4340

CHANGZHOU RIKENSEIKO MACHINERY CO., LTD.
No. 1903 Zhongwu Ave. Zhonglou Changzhou, Jiangsu KINA
Tel: 0519-327-5284
Faks:0519-327-0811

Prije uporabe pročitati UPUTE ZA UPORABU!

Norma: EN 1494:2000+A1:2008

Obavijesti i upozorenja

- DIZALICA se može koristiti samo za zamjenu guma, ne u bilo koju drugu svrhu.
- DIZALICU je dozvoljeno upotrijebiti najviše 50 puta.
- U vozilu se ne smiju nalaziti putnici.
- Nikada ne zalazite ispod vozila podignutog dizalicom.
- Korištenje neispravnih ili nepravilno održavanih dizalica je izuzetno opasno.

Značenje piktograma na naljepnici upozorenja

Ovaj simbol označava potencijalnu opasnost od ozbiljnih ozljeda i smrti.

Ovaj simbol označava zabranu zalaženja ispod vozila podignutog dizalicom.

Nazivi dijelova pantografske dizalice

Vidi FIG. 1. na stranici na engleskom jeziku.

Tehnički podaci i primjena

Vidi FIG. 2. na stranici na engleskom jeziku.

A : NOSAČ	F : OPRUGA DIZALICE	X : VISINA DIZALICE (mm)
B : BAZA	G : NAZIVNA NOSIVOST (t)	Y : NOSIVOST (t)
C : GORNJI KRAK	H_1 : MINIMALNA VISINA (mm)	M : MODEL
D : DONJI KRAK	H_2 : MAKSIMALNA VISINA (mm)	T : TIP
E : ZGLOB ZA POLUGU	H_3 : OPTIMALNA VISINA (mm)	

Uvjeti u kojima je zabranjena uporaba dizalice

- Temperatura niža od -40°C.
- Klizavo i pjeskovito tlo.
- Cesta s velikim nagibom.
- Ekstremni vremenski uvjeti: pljusak, tajfun, ciklon, snježna mećava, grmljavinsko nevrijeme i sl.
- Vozila s opasnim i teškim teretom, primjerice: rastaljeni metal, kiseline, radioaktivne tvari ili osobito lomljiv teret.
- Izravan kontakt s poklopcem motora vozila.
- Na brodu.
- Neravno tlo.

Upute za rad

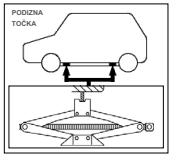

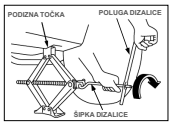

Kod zamjene kotača uvijek provjerite ima li na unutrašnjem dijelu kotača ili površini za postavljanje kotača ostataka korozije.
Dodatne upute:
Molimo vas da se pridržavate uputa za rad.
Nakon provjere dizalice i opterećenja dizalicu upotrijebite na ravnoj podlozi.
Vozilo ne smijete podizati ako je pod opterećenjem, osim ako teret nije stabiliziran.

- Vozilo parkirajte na ravnoj površini i čvrsto pritegnite ručnu kočnicu.
- Mjenjač postavite u vožnju unatrag (vozila s automatskim prijenosom postavite u položaj za parkiranje).
- Upalite sva četiri pokazivača smjera.
- Iz prtljažnika izvadite alat za dizalicu i rezervni kotač.
- Prije uporabe dizalice blokirajte prednji i stražnji dio kotača koji se nalazi dijagonalno u odnosu na kotač koji mijenjate.
- Okretanjem francuskog ključa suprotno od kazaljke na satu olabavite vijke na kotaču, ali ih nemojte ukloniti.
- Podižite dizalicu dok udubina na nosaču ne legne u izbočinu podvozja, kako je prikazano na ilustraciji.
- Dizalicom upravljajte polaganim, ravnomjernim pokretima polugom.
- Vozilo podignite od tla tek toliko da probušena guma malo odstoji od tla pa uklonite vijke i kotač.
- Postavite kotač, a potom lagano pričvrstite vijke, kotač mora sjesti na glavčinu.
- Spustite vozilo pa do kraja zategnite vijke okretanjem francuskog ključa u smjeru kazaljke na satu.

Održavanje

- Spriječite nakupljanje prljavštine na OPRUZI DIZALICE.
- Provjerite nazivnu pločicu, mora zadržati svoj izvorni oblik.
- Nemojte samostalno obavljati promjene na dizalici.
- Nakon svake uporabe, odmah kontaktirajte vašeg Suzuki dobavljača ili servisnog partnera za pregled i održavanje dizalice.
- Ako je oznaka (naljepnica) oštećena, molimo kontaktirajte svog Suzuki dobavljača ili servisnog partnera.

Česky (Czech)

NŮŽKOVÝ ZVEDÁK
NÁVOD K POUŽITÍ

Výrobce:

RIKENKAKI CO., LTD.
5-6-12 Chiyoda, Sakado-shi, Saitama, 350-0214 Japonsko
Tel: 049-248-1661
Fax:049-284-4340

CHANGZHOU RIKENSEIKO MACHINERY CO., LTD.
No. 1903 Zhongwu Ave. Zhonglou Changzhou, Jiangsu ČÍNA
Tel: 0519-327-5284
Fax:0519-327-0811

Před zahájením činnosti si tento NÁVOD K POUŽITÍ pečlivě přečtěte!

Norma: EN 1494:2000+A1:2008

Upozornění a varování

- ZVEDÁK se smí používat pouze k výměně pneumatik a k žádným jiným účelům.
- ZVEDÁK nepoužívejte více než padesátkrát.
- Nezvedejte osoby.
- Nikdy nevstupujte pod vozidlo zvednuté pouze zvedákem.
- Používání vadných či nedostatečně udržovaných zvedáků je nesmírně nebezpečné.

Významy symbolů na štítku pro upozornění

Tento symbol označuje možné riziko, které by mohlo vést k úmrtí nebo vážnému zranění.

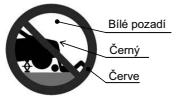

Tento symbol označuje zákaz vstupování pod vozidlo podepřené zvedákem.

Názvy součástí zvedáku Pantograph

Viz FIG. 1 na anglické stránce

Technické údaje a použití

Viz FIG. 2 na anglické stránce.

A : HORNÍ DRŽÁK	F : ŠROUB ZVEDÁKU	X : VÝŠKA ZVEDÁKU (mm)
B : ZÁKLADNA	G : NOMINÁLNÍ ZATÍŽENÍ (t)	Y : ZATÍŽENÍ (t)
C : HORNÍ RAMENO	H_1 : MINIMÁLNÍ VÝŠKA (mm)	M : MODEL
D : DOLNÍ RAMENO	H_2 : MAXIMÁLNÍ VÝŠKA (mm)	T : TYP
E : DRŽADLO	H_3 : VÝŠKA PRO ZAJIŠTĚNÍ VÝKONNOSTI (mm)	

Podmínky, při nichž se výrobek nemá používat

- Při teplotě pod -40°C.
- Na štěrku nebo na písku.
- Na silnici s velkým sklonem.
- V extrémních přírodních podmínkách: bouře, tajfun, cyklon, sněhová bouře, bouře s deštěm atd.
- Zvedání nebezpečných nákladů, například: svařovaný kov, kyseliny, radioaktivní látky nebo speciální křehké zboží.
- Přímý kontakt s kapotou.
- Používání na lodi.
- Země s odlišnou výškou.

Provozní pokyny

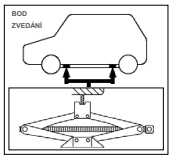

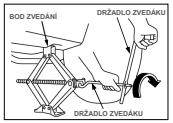

Při výměně kol vždy odstraňte korozi, která může být na vnitřku kola a povrchu pro upevnění kola na vozidle.
Podrobnosti:
Používejte podle „pokynů k použití".
Zvedák používejte na rovné zemi a kontrolujte zvedák i náklad.
Nevstupujte pod zvednutý náklad, pokud náklad není bezpečně upevněn.

- Zaparkujte vůz na rovné ploché zemi a zatáhněte parkovací brzdu.
- Zařaďte zpátečku (automatickou převodovku do stupně „park").
- Zapněte výstražná světla.
- Vyjměte zvedák a náhradní pneumatiku.
- Zajistěte přední a zadní kola úhlopříčně proti demontovanému kolu, než zvedák použijete.
- Matice kola povolte, ale nevyndávejte je - otočte klíčem doleva.
- Zvedněte zvedá, dokud se drážka nedostane do styku s rámem, viz obrázky.
- Používejte zvedák pomalu, plynule pomocí držadla.
- Zvedněte vozidlo tak, aby nahuštěná pneumatika byla těsně nad zemí, demontujte matice a kolo.
- Nainstalujte kolo, pak mírně utáhněte každou matici, kolo musí být nasazeno na náboji.
- Spusťte vozidlo a utáhněte matice křížem proti sobě, otáčejte klíčem doprava.

Údržba

- Zabraňte tomu, aby se na ŠROUBU ZVEDÁKU usadily nečistoty.
- Zkontrolujte jmenný štítek a tvar udržujte stejný jako původně.
- Neupravujte konstrukci zvedáku sami.
- Po jakémkoli použití se obraťte na prodejce Suzuki či na servisního partnera, aby provedl prohlídku a údržbu zvedáku.
- Pokud se štítek (nálepka) poškodí, obraťte se prosím na svého prodejce Suzuki nebo servisního partnera.

Dansk (Danish)

DONKRAFT
BRUGSANVISNING

CE

Fabrikanter:

RIKENKAKI CO., LTD.
5-6-12 Chiyoda, Sakado-shi, Saitama, 350-0214 Japan
Tel: 049-248-1661
Fax:049-284-4340

CHANGZHOU RIKENSEIKO MACHINERY CO., LTD.
No. 1903 Zhongwu Ave. Zhonglou Changzhou, Jiangsu CHINA
Tel: 0519-327-5284
Fax:0519-327-0811

Læs denne BRUGSANVISNING før brug!

Standard: EN 1494:2000+A1:2008

Advarsel
- DONKRAFTEN må kun anvendes til udskiftning af dæk, ikke til andre formål.
- Brug ikke DONKRAFTEN flere end 50 gange.
- Løft aldrig mennesker.
- Kravl aldrig ind under et køretøj, der er løftet med en donkraft.
- Brug af defekte eller utilstrækkeligt vedligeholdte donkrafte, er ekstremt farligt.

Betydning af piktogrammet på advarselsmærket

Dette symbol angiver en mulig fare, der kan medføre dødsfald eller alvorlig skade.

Dette symbol betyder, at du aldrig må kravle ind under et køretøj, der er løftet med donkraften.

Delenes betegnelse for Saksedonkraft
Se FIG 1 på den engelsksprogede side.

Tekniske data og anvendelse
Se FIG 2 på den engelsksprogede side.

A : LØFTEBAKKE	F : DONKRAFTENS SKRUE	X : LØFTEHØJDE (mm)
B : BASE	G : NOMINEL LØFTEKAPACITET (t)	Y : BELASTNING (t)
C : ØVRE ARM	H_1 : MINIMUMSHØJDE (mm)	M : MODEL
D : NEDRE ARM	H_2 : MAKSIMUMSHØJDE (mm)	T : TYPE
E : HÅNDTAGETS LED	H_3 : HØJDE FOR SIKKER BETJENING (mm)	

Betingelser, hvor donkraften ikke må bruges
- Temperatur under -40 °C.
- På mudret eller sandet underlag.
- På stærkt hældende veje.
- Under ekstreme vejrforhold: kraftigt regnvejr, tyfon, cyklon, snestorm, tordenvejr mv.
- Tungt eller farligt gods, fx: smeltet metal, syrer, radioaktive stoffer eller særligt skrøbelige varer.
- Direkte kontakt med køretøjets understel.
- På et skib.
- På underlag med niveauforskelle.

Brugsanvisning
Når du skifter hjul, skal du altid fjerne eventuel rust, der måtte findes inde i hjulet eller på køretøjets hjulmonteringsoverflade.
Nærmere anvisninger:
Gå frem ifølge brugervejledningen.
Brug donkraften på et jævnt underlag, og hold øje med både donkraften og lasten.
Du må ikke foretage indgreb under en løftet last, med mindre lasten er gjort sikkert fast.

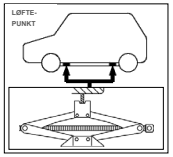

- Parker køretøjet på et fladt, jævnt underlag, og træk bremsen godt.
- Sæt gearkassen i bakgear (en automatisk gearkasse sættes på "parkering").
- Tænd katastrofeblinket.
- Tag donkraftens redskaber og reservehjulet ud af deres opbevaringsrum.
- Bloker foran og bag på det hjul, der sidder diagonalt i forhold til det hjul, der fjernes, inden donkraften bruges.
- Løsn hjulmøtrikkerne uden at fjerne dem ved at dreje skruenøglen mod uret.

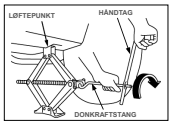

- Løft donkraften, indtil rillerne i donkraftens løftebakke passer til rammen - se illustrationerne.
- Betjen donkraften ved hjælp af donkraftens håndtag med langsomme, jævne bevægelser.
- Løft køretøjet, så et oppustet dæk netop vil være frit af underlaget. Fjern møtrikkerne, og tag hjulet af.
- Sæt det nye hjul på plads, og stram hver møtrik lidt. Hjulet skal sidde på et nav.
- Sænk køretøjet ned, og stram hjulmøtrikkerne fuldstændigt skiftevis i en overfor/diagonalt-sekvens ved at dreje skruenøglen med uret.

Vedligeholdelse
- Pas på at undgå, at DONKRAFTENS SKRUE samler snavs.
- Tjek typeskiltet. Bevar den originale form.
- Det er forbudt selv at foretage ændringer på donkraftens konstruktion.
- Efter ethvert brug, skal du øjeblikkeligt konsultere din Suzuki-forhandler eller servicepartner, for eftersyn og vedligeholdelse af donkraften.
- Hvis mærkaten (etiketten) er beskadiget, skal du rådføre dig med din Suzuki-forhandler eller servicepartner.

Nederlands (Dutch)

SCHAARKRIK
GEBRUIKERSHANDLEIDING

CE

Fabrikanten:

RIKENKAKI CO., LTD.
5-6-12 Chiyoda, Sakado-shi, Saitama, 350-0214 Japan
Tel: 049-248-1661
Fax:049-284-4340

CHANGZHOU RIKENSEIKO MACHINERY CO., LTD.
No. 1903 Zhongwu Ave. Zhonglou Changzhou, Jiangsu CHINA
Tel: 0519-327-5284
Fax:0519-327-0811

Lees deze GEBRUIKERSHANDLEIDING voor gebruik!

Norm: EN 1494:2000+A1:2008

Let op en waarschuwing
- De krik mag alleen worden gebruikt voor het vervangen van banden, niet voor andere doeleinden.
- Niet meer dan 50 maal gebruiken.
- Er mag niemand in de auto zitten.
- Ga nooit onder een voertuig dat door een krik is opgetild.
- Gebruik van defecte of onvoldoende onderhouden krikken is zeer gevaarlijk.

Betekenis van het pictogram op het waarschuwingslabel

Dit symbool geeft potentieel gevaar aan dat tot ernstig letsel of de dood kan leiden.

Dit symbool geeft aan dat u nooit onder een apparaat moet gaan dat door de krik opgetild is.

Naam van de onderdelen van de Schaarkrik
Zie FIG 1 op de Engelse pagina.

Technische gegevens en toepassing
Zie FIG 2 op de Engelse pagina.

A	: BOVENKANT	F	: KRIKSCHROEF	X	: HOOGTE KRIK(mm)
B	: BASIS	G	: NOMINALE LADING (t)	Y	: LADING (t)
C	: BOVENARM	H_1	: MINIMUMHOOGTE (mm)	M	: MODEL
D	: ONDERARM	H_2	: MAXIMUMHOOGTE (mm)	T	: TYPE
E	: SCHARNIER VAN DE HENDEL	H_3	: WERKHOOGTE (mm)		

Niet gebruiken in de volgende gevallen
- Wanneer de temperatuur lager is dan -40°C.
- Op een gladde of zanderige ondergrond.
- Op een sterk hellende weg.
- Bij extreme weersomstandigheden: regen en storm, tyfoon, tornado, sneeuwstorm, onweer, etc.
- Voor het laden van gevaarlijke stoffen, bijv.: gesmolten metaal, zure stoffen, radioactieve stoffen en fragiele goederen.
- In direct contact met de motorkap.
- Op een boot.
- Op een onregelmatige ondergrond.

Gebruiksaanwijzing

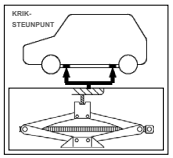

Als een wiel wordt gewisseld, verwijder dan altijd eerst corrosie die op de wiel of de wielas van het voertuig aanwezig is.
Details:
Volg de “gebruiksaanwijzing” nauwkeurig op.
Zet de krik op een stabiele ondergrond, controleer hem en controleer de lading.
Mag niet onder een stijgende lading worden gebruikt, tenzij de lading bevestigd is

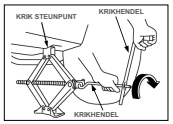

- Parkeer de wagen op een vlakke, egale ondergrond en trek de handrem stevig aan.
- Zet de versnelling in de “achteruit” (automatische versnellingsbak in “parkeerstand”).
- Zet het alarmknipperlicht aan.
- Neem het gereedschap en het reservewiel uit de daarvoor bestemde ruimte.
- Blokkeer de voor- en achterkant van het wiel dat tegenover het te verwijderen wiel ligt voordat u de krik gebruikt.
- Draai de moeren tegen de klok in los.
- Schroef de krik omhoog totdat de uitsparing in het kriksteunpunt past, zie illustraties.
- Bedien de krik met langzame, vloeiende bewegingen, met behulp van de hendel.
- Krik de auto zover op dat de opgeblazen band niet de ondergrond zal raken, verwijder de moeren en het wiel.
- Breng het andere wiel aan, schroef de moeren licht vast, het wiel moet op de wielas vastzitten.
- Laat de wagen zakken en draai de moeren kruiselings en klokgewijs geheel aan. .

Onderhoud
- Zorg ervoor dat de krik niet vuil wordt.
- Check het naamplaatje, sla de krik in de oorspronkelijke vorm op.
- Demonteer de krik niet zelf.
- Na ieder gebruik dient u onmiddellijk uw Suzuki-dealer of Servicepartner te raadplegen voor de inspectie en het onderhoud van de krik.
- Als het label (de sticker) beschadigd is, neemt u contact op met uw Suzuki-dealer of Servicepartner.

Eesti (Estonian)

PANTOGRAPH-TUNGRAUD
KASUTUSJUHEND

CE

Tootjad:

RIKENKAKI CO., LTD.
5-6-12 Chiyoda, Sakado-shi, Saitama, 350-0214 Jaapan
Tel: 049-248-1661
Faks: 049-284-4340

CHANGZHOU RIKENSEIKO MACHINERY CO., LTD.
Nr. 1903 Zhongwu Ave. Zhonglou Changzhou, Jiangsu HIINA
Tel: 0519-327-5284
Faks: 0519-327-0811

Palun lugege seda KASUTUSJUHENDIT enne kasutamist!

Norm: EN 1494:2000+A1:2008

Tähelepanu ja hoiatus

- Antud TUNGRAUD on kasutamiseks ainult rehvivahetuseks ja mitte mistahes muul eesmärgil.
- Ärge kasutage TUNGRAUDA rohkem kui 50 korda.
- Sõidukis ei tohi viibida inimesi.
- Ärge kunagi ronige tungrauaga tõstetud sõiduki alla.
- Vigaste või korralikult hooldamata tungraudade kasutamine on äärmiselt ohtlik.

Piktogrammi tähendus hoiataval sildil.

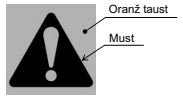

See märk viitab võimalikule ohule, mis võib lõppeda tõsise vigastuse või surmaga.

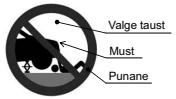

See märk hoiatab, et tungraua kasutamise ajal ei tohi ronida sõiduki alla.

Pantograaf tungraua detailid

Vaadake ingliskeelselt lehelt FIG. 1

Tehniline info ja rakendamine

Vaadake ingliskeelselt lehelt FIG. 2

A : ÜLEMINE KINNITI	F : JÕUKRUVI	X : KRUVI KÕRGUS (mm)
B : ALUS	G : NOMINAALKOORMUS (t)	Y : KOORMUS (t)
C : ÜLEMINE ÕLG	H_1 : MINIMAALNE KÕRGUS (mm)	M : MUDEL
D : ALUMINE ÕLG	H_2 : MAKSIMAALNE KÕRGUS (mm)	T : TÜÜP
E : SANGA LIIGEND	H_3 : JÕUDLUSE TAGATUD KÕRGUS (mm)	

Kasutada ei tohi alljärgnevatel tingimustel:

- kui temperatuur on alla -40°C
- mudasel või liivasel pinnal
- kallakul
- äärmuslikes loodustingimustes: vihmasadu, taifuun, tsüklon, lumetorm, äikesetorm, jne
- ohtliku koorma korral, näiteks: sulatatud metall, happeline aine, radioaktiivne aine või kergesti purunevad kaubad
- otsene kontakt lükanduksega
- kasutamine paadis
- erineva kõrgusega põrandad.

Kasutamise juhised

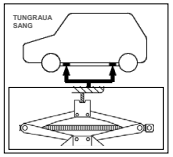

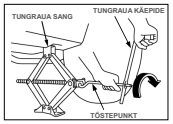

Igakordsel ratta vahetamisel tuleb alati eemaldada korrosioon, mida võib leiduda ratta siseküljel või sõidukil rattapaigalduse kohal.
Detailid.
Palun kasutage seadet vastavalt „kasutamise juhistele".
Kasutage tungrauda horisontaalsel pinnal, kontrollides sõidukit ja tungrauda.
Kasutamine ei ole lubatud koorma tõstmisel, enne kui koorem ei ole kindlalt kinnitatud.

- Parkige sõiduk tasasel horisontaalsel pinnal ning tõmmake käsipidur kindlalt peale.
- Jätke sisse „tagurdamise käik" (automaatkäigukasti korral „parkimine").
- Lülitage sisse ohutuled.
- Võtke hoiupaigast tungraud ja selle juurde kuuluvad tööriistad ning tagavararatas.
- Vahetatava ratta suhtes diagonaalselt paiknevad esimene ja tagumine ratas tuleb tõkestada enne tungraua kasutamist.
- Keerates mutrivõtmega vastupäeva, lõdvestage, kuid ärge eemaldage ratta mutreid.
- Tõstke tungrauda kõrguseni, kus tungrauapea renn sobitub juhtraamiga, vaata jooniseid.
- Kasutage tungrauda aeglaste, ühtlaste liigutustega, kasutades tungraua käepidet.
- Tõstke sõidukit kuni vahetatav ratas on maast lahti, eemaldage mutrid ja ratas.
- Paigaldage ratas, siis pingutage kergelt iga mutrit, ratas peab sobituma rattarummule.
- Laske sõiduk alla ja pingutage mutrid tugevalt risti üle ühe, keerates mutrivõtit päripäeva.

Hooldus

- Palun vältige TUNGRAUA KRUVI määrdumist.
- Kontrollige andmeplaati, säilitage originaalvorm.
- Mitte muuta iseseisvalt tungraua konstruktsiooni.
- Pärast iga kasutamist pöörduge tungraua ülevaatuses ja hoolduseks viivitamatult oma Suzuki edasimüüja või teenindusesindaja poole.
- Kahjustatud sildi (kleebise) korral pöörduge oma Suzuki edasimüüja või teenindusesindaja poole.

Suomi (Finnish)

SAKSITUNKKI
KÄYTTÖOHJE

CE

Valmistajat:

RIKENKAKI CO., LTD.
5-6-12 Chiyoda, Sakado-shi, Saitama, 350-0214 Japan
Puh.: 049-248-1661
Faksi: 049-284-4340

CHANGZHOU RIKENSEIKO MACHINERY CO., LTD.
No. 1903 Zhongwu Ave. Zhonglou Changzhou, Jiangsu CHINA
Puh.: 0519-327-5284
Faksi: 0519-327-0811

Lue tämä KÄYTTÖOHJE ennen käyttöä!

Standardi: EN 1494:2000+A1:2008

Huomautukset ja varoitukset

- TUNKKIA voi käyttää ainoastaan renkaiden vaihtoon, ei mihinkään muuhun tarkoitukseen.
- Käytä TUNKKIA alle 50 kertaa.
- Ei saa käyttää henkilöiden nostoon.
- Älä koskaan mene pelkän tunkin varassa olevan auton alle.
- Viallisten tai puutteellisesti ylläpidettyjen tunkkien käyttö on erittäin vaarallista.

Varotuskuvakkeiden merkitys

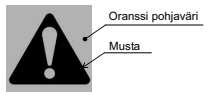

Osoittaa mahdollista vaaratilannetta, joka voi johtaa kuolemaan tai vakavaan loukkaantumiseen.

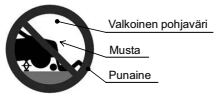

Osoittaa kieltoa mennä auton alle, kun se on pelkän tunkin varassa.

Saksitunkin osat

Katso FIG. 1 englanninkieliseltä sivulta.

Tekniset tiedot ja käyttö

Katso FIG. 2 englanninkieliseltä sivulta.

A : NOSTIN	F : SÄÄTÖRUUVI	X : TUNKIN KORKEUS (mm)
B : ALUSTA	G : NIMELLINEN NOSTOKYKY (t)	Y : NOSTOVOIMA (t)
C : YLÄVARSI	H_1 : ALIN KORKEUS (mm)	M : MALLI
D : ALAVARSI	H_2 : YLIN KORKEUS (mm)	T : TYYPPI
E : KAMMEN PAIKKA	H_3 : NOSTOKORKEUS (mm)	

Ei saa käyttää seuraavissa tapauksissa

- Kun lämpötila on alle -40 °C.
- Lieju- tai hiekkamaastossa.
- Jyrkällä mäellä.
- Äärimmäisissä ilmasto-olosuhteissa: sademyrsky, pyörremyrsky (sykloni, taifuuni), lumimyrsky, ukonilma jne.
- Vaarallisten raskaiden lastien kuljetuksessa, kuten: sulametalli, happamat aineet, radioaktiiviset aineet tai eritoten irtotavarat.
- Suorassa kosketuksessa koriin.
- Laivalla, veneellä jne.
- Epätasaisella maaperällä.

Käyttöohjeet

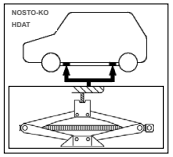

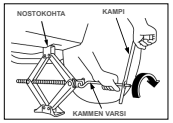

Kun pyörä vaihdetaan, puhdista aina ruoste, jota voi olla pyörän sisäpinnoilla ja pyörän asennuspinnalla autossa.
Yksityiskohdat:
Toimi "käyttöohjeiden" mukaisesti.
Käsittele tunkkia tasaisella maaperällä, kun tarkistat sitä ja kuormaa.
Älä työskentele ylös nostetun kuorman alla, ellei sitä ole tuettu varmalla tavalla.

- Pysäköi auto tasaiselle, vaakasuoralle pinnalle ja kiristä jarru.
- Kytke vaihteisto peruutusvaihteelle (automaattivaihteistossa pysäköintiasentoon).
- Sytytä varoitusvalot.
- Ota nostotyökalut ja varapyörä esille.
- Aseta kiilat vaihdettavaa pyörää vinosti vastapäätä olevan pyörän eteen ja taakse ennen kuin käytät tunkkia.
- Löysää pyöränmutterit (älä poista niitä) kääntämällä avainta vastapäivään.
- Nosta tunkkia, kunnes tunkin päässä oleva ura asettuu auton runkorakenteessa olevaan kohoumaan (katso kuvista).
- Nosta tunkkia hitaasti ja tasaisesti kampea käyttäen.
- Nosta autoa, kunnes rengas nousee irti maasta ja irrota mutterit ja pyörä.
- Asenna varapyörä ja kiristä mutterit kevyesti. Pyörän on oltava hyvin napakeskiöllä.
- Laske auto alas ja kiristä pyöränmutterit kunnolla ristiin, myötäpäivään.

Huolto

- Pidä TUNKIN SÄÄTÖRUUVI puhtaana.
- Tarkista nimikilpi. pidä se alkuperäisessä kunnossa.
- Tunkkiin ei saa tehdä rakennemuutoksia itse.
- Minkä tahansa käytön jälkeen kysy heti lisäohjeita Suzuki-jälleenmyyjältäsi tai huoltokumppaniltasi tunkin tarkastukseen ja huoltoon liittyvissä asioissa.
- Jos etiketti (tarra) on vahingoittunut, ota yhteys Suzuki-jälleenmyyjääsi tai huoltokumppaniin.

Français (French)

CRIC PANTOGRAPHE
MANUEL D'UTILISATION

Fabricants :

RIKENKAKI CO., LTD.
5-6-12 Chiyoda, Sakado-shi, Saitama, 350-0214 Japon
Tél : 049-248-1661
Fax : 049-284-4340

CHANGZHOU RIKENSEIKO MACHINERY CO., LTD.
No. 1903 Zhongwu Ave. Zhonglou Changzhou, Jiangsu CHINE
Tél : 0519-327-5284
Fax : 0519-327-0811

Lire attentivement le présent MANUEL D'INSTRUCTION avant toute utilisation !

Norme : EN 1494:2000+A1:2008

Attention et avertissement

- Le CRIC ne doit être utilisé que pour remplacer les pneus, pas à d'autres fins.
- Ne pas utiliser le CRIC plus de 50 fois.
- Ne pas utiliser le cric lorsqu'une personne est dans le véhicule.
- Ne jamais se glisser sous le véhicule mis sur cric.
- L'utilisation de crics défectueux ou mal entretenus peut se révéler extrêmement dangereuse.

Signification des pictogrammes sur l'étiquette d'avertissement

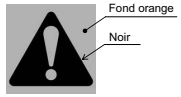

Ce symbole indique un danger potentiel pouvant causer des blessures ou un décès.

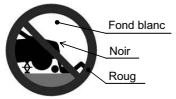

Ce symbole indique de ne jamais se glisser sous le véhicule lorsqu'il est monté sur cric.

Désignation des pièces du cric à parallélogramme

Voir FIG 1. du document anglais.

Données techniques et application

Voir FIG 2. du document anglais.

A : PLATEFORME DE SUPPORT CHARGE	F : CRIC À VIS	X : HAUTEUR CRIC (mm)
B : EMBASE	G : CHARGE NOMINALE (tonne)	Y : CHARGE (tonne)
C : BRAS SUPÉRIEUR	H_1 : HAUTEUR MINIMALE (mm)	M : MODÈLE
D : BRAS INFÉRIEUR	H_2 : HAUTEUR MAXIMALE (mm)	T : TYPE
E : LEVIER D'ARTICULATION	H_3 : HAUTEUR OPTIMALE (mm)	

Utilisation interdite dans les conditions suivantes

- Lorsque la température est inférieure à -40° C.
- Sur sol boueux ou sablonneux.
- Sur une forte pente.
- Dans des conditions naturelles extrêmes : tempête, typhon, cyclone, tempête de neige, orage, etc.
- En cas de chargement lourd ou dangereux, par exemple : métal en fusion, substance acide, substance radioactive ou marchandises particulièrement friables.
- Contact direct avec le capot.
- Utilisation sur un bateau.
- Sur un sol irrégulier.

Instructions d'utilisation

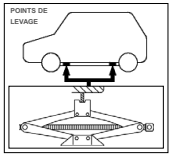

Lors du remplacement d'une roue, toujours éliminer toute corrosion détectée à l'intérieur de la roue et sur la surface d'installation de la roue sur le véhicule.
Remarques :
Respecter les "instructions d'utilisation".
Utiliser le cric sur un sol plat sans oublier de contrôler le cric et la charge.
Ne pas utiliser le cric en cas de charge supplémentaire, sauf si la charge est correctement fixée.

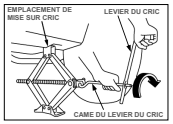

- Garer la voiture sur un sol plat et mettre correctement le frein à main.
- Mettre la boîte de vitesses sur marche arrière (sur "parking" sur une boîte automatique).
- Allumer les feux de détresse.
- Sortir les outils du cric et la roue de rechange du compartiment de stockage.
- Mettre des cales à l'avant et à l'arrière de la roue opposée en diagonale à la roue à changer avant d'utiliser le cric.
- Desserrer, mais ne pas retirer les écrous en tournant la clé dans le sens antihoraire.
- Monter le cric jusqu'à ce que la tête dentelée du cric entre en contact avec la partie du châssis prévue à cet effet. Voir illustrations.
- Actionner le cric avec des mouvements lents et fluides, à l'aide du levier.
- Soulever le véhicule de sorte qu'un pneu gonflé frôle juste le sol, déposer les écrous et la roue.
- Installer la roue, puis resserrer légèrement chaque écrou, la roue doit reposer sur l'essieu.
- Descendre le véhicule et serrer complètement les écrous en étoile (en serrant un à un les écrous opposés) en tournant la clé dans le sens horaire.

Maintenance

- Éviter toute accumulation de saleté sur le CRIC À VIS.
- Vérifier la plaque signalétique, s'assurer que la forme est restée inchangée.
- Ne pas modifier la structure du cric.
- Après toute utilisation, consultez immédiatement votre concessionnaire ou le service après-vente partenaire Suzuki pour procéder au contrôle et à l'entretien du cric.
- Si l'étiquette (autocollant) est endommagée, veuillez consulter votre concessionnaire ou le service après-vente partenaire Suzuki.

Deutsch (German)

SCHERENWAGENHEBER
BEDIENUNGSANLEITUNG

CE

Hersteller:

RIKENKAKI CO., LTD.
5-6-12 Chiyoda, Sakado-shi, Saitama, 350-0214 Japan
Tel: 049-248-1661
Fax:049-284-4340

CHANGZHOU RIKENSEIKO MACHINERY CO., LTD.
No. 1903 Zhongwu Ave. Zhonglou Changzhou, Jiangsu CHINA
Tel: 0519-327-5284
Fax:0519-327-0811

Bitte lesen Sie diese BEDIENUNGSANLEITUNG vor Gebrauch!

Norm: EN 1494:2000+A1:2008

Achtung und Warnung

- Der WAGENHEBER darf nur für den Reifenwechsel verwendet werden, nicht für andere Zwecke.
- Verwenden Sie den WAGENHEBER nicht öfter als 50-mal.
- Keine Personen befördern.
- Begeben Sie sich niemals unter ein Fahrzeug in angehobener Position.
- Die Verwendung von beschädigten oder nicht ausreichend gewarteten Wagenhebern ist extrem gefährlich.

Bedeutung der Piktogramme auf dem Warnschild

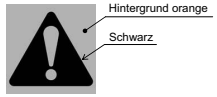

Dieses Symbol weist auf eine mögliche Gefahr hin, die zum Tode oder schweren Verletzungen führen kann.

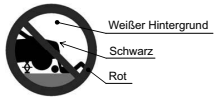

Dieses Symbol weist darauf hin, dass Sie sich niemals unter das Fahrzeug begeben dürfen, wenn es angehoben ist.

Teilename Scherenwagenheber

Siehe FIG. 1 auf der englischen Seite.

Technische Daten und Anwendung

Siehe FIG. 2 auf der englischen Seite.

A : OBENHALTERUNG	F : HUBSPINDEL	X : HUBHÖHE (mm)
B : BASIS	G : NENNLAST (t)	Y : LAST (t)
C : OBERER ARM	H_1 : MINDESTHÖHE (mm)	M : MODELL
D : UNTERER ARM	H_2 : MAXIMALE HÖHE (mm)	T : TYP
E : GRIFFGELENK	H_3 : LEISTUNGSGARANTIE HÖHE (mm)	

Nicht unter folgenden Bedingungen verwenden

- Bei Temperaturen unter -40°C.
- Auf Schmutz oder Sandboden.
- Straßen mit starker Neigung.
- Extreme Wetterbedingungen: Regensturm, Taifun, Zyklon, Schneesturm, Gewitter, usw.
- Laden von gefährlichen schweren Materialien, z.B.: geschmolzenes Metall, säurehaltige Substanz, radioaktiven Substanzen oder besonders körnige Waren.
- Direkter Kontakt mit der Motorhaube.
- Verwendung auf einem Boot.
- Unebener Boden.

Bedienungsanleitung

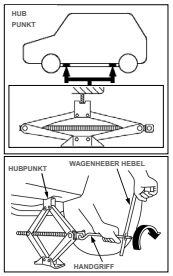

Wenn ein Reifen gewechselt wird, entfernen Sie immer den Rost, der sich innen am Rad und an der Montagefläche am Fahrzeug befinden kann.
Details:
Bitte gemäß "Bedienungsanleitung" verwenden.
Verwenden Sie den Wagenheber auf ebenem Boden und prüfen den Hub und die Last.
Nicht unter angehobener Last verwenden, es sei denn die Last
Ist sicher befestigt.

- Parken Sie das Auto auf einem flachen, ebenen Boden und ziehen die Bremse fest an.
- Legen Sie den Rückwärtsgang ein (Automatikgetriebe in "Park" Stellung).
- Stellen sie die Warnblinkanlage ein.
- Holen Sie den Wagenheber und den Ersatzreifen aus dem Stauraum.
- Blockieren Sie vor Verwendung des Wagenhebers die Vorder- und Hinterräder, die sich diagonal gegenüberliegen.
- Lösen Sie die Radmuttern durch Drehen des Schraubschlüssels gegen den Uhrzeigersinn, aber entfernen Sie die Muttern nicht.
- Heben Sie den Wagenheber, bis die Nut des Wagenheberkopfs in den Bolzenrahmen passt, s. Abb.
- Bedienen Sie den Wagenheber mit langsamer, ruhiger Bewegung mit dem Hebel.
- Heben Sie das Fahrzeug so an, dass ein aufgepumpter Reifen sich soeben vom Boden abhebt, entfernen Sie Muttern und Rad.
- Installieren Sie das Rad, ziehen leicht jede Mutter fest, das Rad muss auf der Nabe sitzen.
- Senken Sie das Fahrzeug und ziehen die Radmuttern in kreuzweiser Reihenfolge durch Drehen des Schraubenschlüssels im Uhrzeigersinn fest.

Wartung

- Bitte schützen Sie die HUBSPINDEL vor Schmutzansammlung.
- Prüfen Sie das Typenschild, Originalformat bewahren.
- Die Konstruktion des Wagenhebers nicht selbst verändern.
- Wenden Sie sich nach jeglichem Gebrauch umgehend an Ihren Suzuki-Vertragshändler oder Servicepartner für die Inspektion und Wartung des Wagenhebers.
- Wenn das Etikett (der Aufkleber) beschädigt ist, wenden Sie sich bitte an Ihren Suzuki-Vertragshändler oder Servicepartner.

Ελληνικά (Greek)

ΓΡΥΛΟΣ ΠΑΝΤΟΓΡΑΦΟΥ
ΕΓΧΕΙΡΙΔΙΟ ΟΔΗΓΙΩΝ ΧΡΗΣΗΣ

CE

Κατασκευαστές:

RIKENKAKI CO., LTD.
5-6-12 Chiyoda, Sakado-shi, Saitama, 350-0214 Ιαπωνία
Τηλ.: 049-248-1661
Φαξ: 049-284-4340

CHANGZHOU RIKENSEIKO MACHINERY CO., LTD.
No. 1903 Zhongwu Ave. Zhonglou Changzhou, Jiangsu KINA
Τηλ.: 0519-327-5284
Φαξ: 0519-327-0811

Διαβάστε αυτό το ΕΓΧΕΙΡΙΔΙΟ ΧΡΗΣΗΣ προσεκτικά πριν από τη χρήση.

Πρότυπο: EN 1494:2000+A1:2008

Προσοχή και προειδοποίηση

- Ο ΓΡΥΛΟΣ μπορεί να χρησιμοποιείται μόνο για αντικατάσταση ελαστικών, όχι για οποιονδήποτε άλλο σκοπό.
- Μην χρησιμοποιείτε τον ΓΡΥΛΟ παραπάνω από 50 φορές.
- Μην ανυψώνετε το όχημα με άτομο μέσα σε αυτό.
- Δεν πρέπει ποτέ να βρίσκεστε κάτω από το όχημα που έχει ανυψωθεί με γρύλο.
- Η χρήση ελαττωματικών ή ανεπαρκώς συντηρημένων γρύλων είναι εξαιρετικά επικίνδυνη.

Σημασία εικονογράμματος σε ετικέτα προφύλαξης

Το σύμβολο υποδεικνύει ότι πρόκειται για δυνητικό κίνδυνο, ο οποίος θα μπορούσε να προκαλέσει θάνατο ή σοβαρό τραυματισμό.

Το σύμβολο υποδεικνύει ότι δεν πρέπει ποτέ να βρίσκεστε κάτω από το όχημα όταν αυτό στηρίζεται στον γρύλο.

Ονόματα εξαρτημάτων του γρύλου παντογράφου

Ανατρέξτε στο FIG. 1 στην αγγλική σελίδα.

Τεχνικά δεδομένα και εφαρμογή

Ανατρέξτε στο FIG. 2 στην αγγλική σελίδα.

A	: ΒΑΣΗ ΚΟΡΥΦΗΣ	F	: ΚΟΧΛΙΑΣ ΓΡΥΛΟΥ	X	: ΥΨΟΣ ΑΠΟ ΤΟ ΕΔΑΦΟΣ (mm)
B	: ΒΑΣΗ	G	: ΟΝΟΜΑΣΤΙΚΟ ΦΟΡΤΙΟ (t)	Y	: ΦΟΡΤΙΟ (t)
C	: ΑΝΩ ΒΡΑΧΙΟΝΑΣ	H_1	: ΕΛΑΧΙΣΤΟ ΥΨΟΣ (mm)	M	: ΜΟΝΤΕΛΟ
D	: ΚΑΤΩ ΒΡΑΧΙΟΝΑΣ	H_2	: ΜΕΓΙΣΤΟ ΥΨΟΣ (mm)	T	: ΤΥΠΟΣ
E	: ΣΥΝΔΕΣΜΟΣ ΧΕΙΡΟΛΑΒΗΣ	H_3	: ΥΨΟΣ ΔΙΑΣΦΑΛΙΣΗΣ ΑΠΟΔΟΣΗΣ (mm)		

Συνθήκες απαγόρευσης χρήσης

- Όταν η θερμοκρασία είναι χαμηλότερη από -40°C.
- Σε λασπωμένο ή αμμώδες έδαφος.
- Σε δρόμο με μεγάλη κλίση.
- Σε ακραίες καιρικές συνθήκες: καταιγίδα, τυφώνας, κυκλώνας, χιονοθύελλα, καταιγίδα με κεραυνούς, κ.λπ.
- Όταν το φορτίο περιλαμβάνει επικίνδυνα αντικείμενα ή ουσίες, για παράδειγμα: λιωμένο μέταλλο, όξινη ουσία, ραδιενεργή ουσία ή ιδιαίτερα κοφτερά αντικείμενα.
- Όταν βρίσκεται σε άμεση επαφή με το κατό.
- Όταν χρησιμοποιείται σε βάρκα.
- Σε έδαφος που παρουσιάζει διαφορές στο ύψος.

Οδηγίες χρήσης

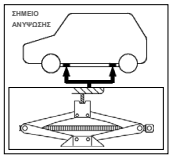

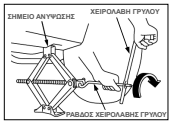

Όποτε αλλάζετε τροχό, απομακρύνετε πάντα οποιαδήποτε διάβρωση υπάρχει στο εσωτερικό του τροχού και στην επιφάνεια σκελετού του τροχού του οχήματος.
Λεπτομέρειες:
Να χρησιμοποιείτε τον γρύλο σύμφωνα με τις «Οδηγίες χρήσης».
Να χρησιμοποιείτε τον γρύλο σε επίπεδο έδαφος κατά τον έλεγχο του γρύλου και του φορτίου.
Απαγορεύεται η χρήση του κάτω από ανυψωμένο φορτίο, το οποίο δεν έχει δεθεί ασφαλώς.

- Σταθμεύστε το αυτοκίνητο σε ίσιο, επίπεδο έδαφος και τραβήξτε το χειρόφρενο γερά.
- Ρυθμίστε το κιβώτιο ταχυτήτων στην «όπισθεν» (σε αυτόματο κιβώτιο ταχυτήτων στη «στάθμευση»).
- Ανάψτε τα φώτα κινδύνου.
- Απομακρύνετε τα εργαλεία ανύψωσης και τον επιπλέον τροχό από την περιοχή αποθήκευσης.
- Πριν τη χρήση του τροχού, κλείστε το μπροστινό και οπίσθιο μέρος του τροχού διαγωνίως απέναντι από τον τροχό που θα αλλαχθεί.
- Χαλαρώστε, αλλά μην απομακρύνετε τα περικόχλια γυρίζοντας το κλειδί αριστερόστροφα.
- Σηκώστε τον γρύλο μέχρι η εσοχή της κεφαλής του γρύλου να εφαρμόσει με την εγκοπή του σκελετού (δείτε εικόνες).
- Χρησιμοποιήστε τον γρύλο με αργή, απαλή κίνηση με τη βοήθεια της χειρολαβής.
- Ανυψώστε το όχημα ώστε να υπάρχει χώρος για την τοποθέτηση του φουσκωμένου ελαστικού, αφαιρέστε τα περικόχλια και τον τροχό.
- Εγκαταστήστε τον τροχό και μετά σφίξτε ελαφρά κάθε περικόχλιο έτσι ώστε κάθε τροχός να τοποθετηθεί στην πλήμνη.
- Χαμηλώστε το όχημα και σφίξτε πλήρως τα περικόχλια σε κατά μήκος διασταυρούμενη ακολουθία γυρίζοντας το κλειδί δεξιόστροφα.

Συντήρηση

- Προφυλάξτε τον κοχλία του γρύλου από συγκέντρωση ακαθαρσιών.
- Να ελέγχετε την πινακίδα και να διατηρείτε το σχήμα στην αρχική του μορφή.
- Απαγορεύεται η επαναρρύθμιση της κατασκευής του γρύλου από την πλευρά σας.
- Μετά από κάθε Χρήση, συμβουλευτείτε άμεσα τον Αντιπρόσωπο της Suzuki ή τον Συνεργάτη Service για τον έλεγχο και τη συντήρηση του γρύλου.
- Εάν η Ετικέτα (αυτοκόλλητο) έχει υποστεί ζημιά, παρακαλούμε συμβουλευτείτε τον Αντιπρόσωπο της Suzuki ή τον Συνεργάτη Service.

Magyar (Hungarian)

PANTOGRÁF EMELŐ
HASZNÁLATI ÚTMUTATÓ

CE

Gyártók:

RIKENKAKI CO., LTD.
5-6-12 Chiyoda, Sakado-shi, Saitama, 350-0214 Japán
Tel.: 049-248-1661
Fax: 049-284-4340

CHANGZHOU RIKENSEIKO MACHINERY CO., LTD.
No. 1903 Zhongwu Ave. Zhonglou Changzhou, Jiangsu KÍNA
Tel.: 0519-327-5284
Fax: 0519-327-0811

Kérjük, a működtetés előtt olvassa el ezt a HASZNÁLATI ÚTMUTATÓT!

Szabvány: EN 1494:2000+A1:2008

Figyelemfelhívás és figyelmeztetés

- Az EMELŐ csak kerékcseréhez használható, egyéb műveletre nem.
- Az EMELŐT ne használja több mint 50 alkalommal.
- Ne emelje meg személlyel együtt.
- Soha ne másszon az emelővel megemelt jármű alá.
- A hibás vagy nem megfelelően karbantartott emelő használata rendkívül veszélyes.

A figyelmeztető címkén lévő piktogram jelentése

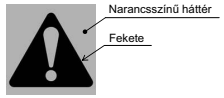

Ez a szimbólum olyan lehetséges veszélyt jelez, amely halálhoz vagy súlyos sérüléshez vezethet.

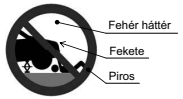

Ez a szimbólum azt jelzi, hogy soha ne másszon be a jármű alá, amikor azt az emelő tartja meg.

A pantográfos emelő alkatrészeinek neve

Lásd az FIG 1 az angol nyelvű oldalon.

Műszaki adatok és alkalmazás

Lásd az FIG 1 az angol nyelvű oldalon.

A : FELSŐ TARTÓ	F : EMELŐCSAVAR	X : EMELÉSI MAGASSÁG (mm)
B : ALAP	G : NÉVLEGES TERHELÉS (t)	Y : TERHELÉS (t)
C : FELSŐ KAR	H_1 : MINIMUM MAGASSÁG (mm)	M : MODELL
D : ALSÓ KAR	H_2 : MAXIMUM MAGASSÁG (mm)	T : TÍPUS
E : FOGANTYÚ CSUKLÓ	H_3 : A TELJESÍTŐKÉPESSÉGET BIZTOSÍTÓ MAGASSÁG (mm)	

A használatot kizáró körülmények

- -40°C alatti hőmérséklet.
- Ingoványos vagy homokos talaj.
- Erősen emelkedő út.
- Szélsőséges természeti körülmények: vihar, tájfun, ciklon, hóvihar, villámlással járó vihar stb.
- Veszélyes, nehéz rakomány, például: olvasztott fém, savas anyag, radioaktív anyag vagy határozottan törékeny termékek.
- Közvetlen érintkezés a motorháztetővel.
- Hajón való használat.
- Egyenetlen talaj.

Használati utasítások

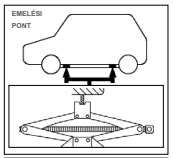

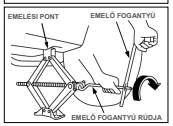

Valahányszor kereket cserél, mindig távolítsa el a korrózió, ami a kerék belsejében és a kerék járműre szerelendő felületén található.
Részletek:
Kérjük, a "használati utasításoknak" megfelelően működtesse.
Az emelőt egyenes talajon működtesse, ellenőrizve az emelőt és a terhelést.
Ne működtesse rakománnyal együtt, hacsak a rakomány nincs biztonságosan rögzítve.

- Parkolja az autót sima, egyenes talajra, és húzza be a féket szorosan.
- Állítsa a váltót "hátramenetbe" (az automata váltót "parkoló" állásba).
- Kapcsolja be a vészvillogót.
- Vegye elő az emelőszerszámokat és a pótkereket a rakodótérből.
- Az emelő működtetése előtt blokkolja elölről és hátulról az eltávolítandó kerékkel átellenes kereket.
- A kulcsot az óramutató járásával ellentétes irányba fordítva lazítsa ki, de ne távolítsa el a kerékanyákat.
- Emelje meg az emelőt, amíg az emelőfej vájatai el nem érik a váz munkalécét, lásd ábrák.
- Az emelőt lassú, sima mozdulatokkal működtesse, az emelő fogantyú segítségével.
- Emelje fel a járművet éppen annyira, hogy egy felfújt abroncs épp csak a talaj fölé emelkedjen, távolítsa el az anyákat és a kereket.
- Szerelje fel a kereket, utána enyhén szorítsa meg az összes anyát; a keréknek az agyra kell illeszkednie.
- Eressze le a járművet, majd teljesen szorítsa meg a kerékanyákat keresztirányban haladva, a kulcs óramutató járása szerinti irányba fordításával.

Karbantartás

- Kérjük, akadályozza meg, hogy az EMELŐCSAVARBAN kosz halmozódjon fel.
- Ellenőrizze az adattáblát, őrizze meg az eredeti alakját.
- Ne szerelje szét az emelő szerkezetét.
- Minden használat után azonnal vegye fel a kapcsolatot egy Suzuki-értékesítővel vagy szervizpartnerrel az emelő bevizsgálásához és karbantartásához.
- Amennyiben a címke (matrica) sérült, kérjük forduljon a Suzuki forgalmazójához vagy szervizpartneréhez.

Italiano (Italian)

CRIC A PANTOGRAFO
MANUALE D'ISTRUZIONI

CE

Fabbricanti:

RIKENKAKI CO., LTD.
5-6-12 Chiyoda, Sakado-shi, Saitama, 350-0214 Giappone
Tel: 049-248-1661
Fax:049-284-4340

CHANGZHOU RIKENSEIKO MACHINERY CO., LTD.
No. 1903 Zhongwu Ave. Zhonglou Changzhou, Jiangsu CINA
Tel: 0519-327-5284
Fax:0519-327-0811

Leggere il presente MANUALE D'ISTRUZIONI prima di utilizzare il prodotto!

Norma: EN 1494:2000+A1:2008

Avvertenze di sicurezza

- Il CRIC può essere utilizzato solo per la sostituzione di pneumatici, non per qualsiasi altro scopo.
- Utilizzare il CRIC non più di 50 volte.
- Non sollevare persone.
- Non infilarsi mai sotto un veicolo sollevato con il crick.
- L'uso di cric difettosi o non adeguatamente tenuti in efficienza è estremamente pericoloso.

Significato del pittogramml delle etichette di avvertenza

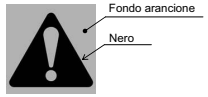

Questo simbolo indica un potenziale pericolo che può causare la morte o gravi lesioni.

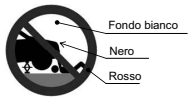

Questo simbolo indica che non si deve mai infilarsi sotto il veicolo quando è sollevato con il cric.

Nome dei componenti del Cric a pantografo

Vedi FIG 1 pagina in inglese.

Dati tecnici e applicazione

Vedi FIG 2 pagina in inglese.

A : SUPPORTO	F : VITE CRIC	X : ALTEZZA CRIC (mm)
B : BASE	G : PORTATA NOMINALE (t)	Y : PORTATA (t)
C : BRACCIO SUP.	H_1 : ALTEZZA MIN (mm)	M : MODELLO
D : BRACCIO INF.	H_2 : ALTEZZA MAX (mm)	T : TIPO
E : GIUNTO MANOVELLA	H_3 : ALTEZZA DI PRESTAZIONE GARANTITA (mm)	

Condizioni di non utilizzo

- Temperature inferiori a -40 °C.
- Su terreno sabbioso o fangoso.
- Su strada con elevata pendenza.
- In condizioni climatiche estreme: temporali, tifoni, cicloni, bufere di neve, tempeste, etc.
- Sollevamento di oggetti molto pericolosi, ad esempio: metallo fuso, sostanze acide, sostanze radioattive o merci particolarmente fredde.
- A diretto contatto col vano motore.
- Su un'imbarcazione.
- Su terreno con dislivelli.

Istruzioni di funzionamento

Ogni volta che si cambia una ruota, togliere sempre tutte le tracce di corrosione eventualmente presenti all'interno della ruota e sulla superficie di montaggio della ruota sul veicolo.
Particolari:
Effettuare le operazioni seguendo le "istruzioni di funzionamento".
Usare il cric su un terreno livellato controllando sia il cric che il carico.
Non operare al di sotto di un carico sollevato, a meno che il carico non sia stato fissato saldamente.

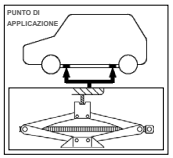

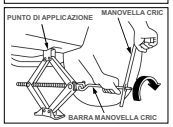

- Parcheggiare il veicolo su un terreno livellato e in piano; azionare il freno a fondo.
- Mettere il cambio in "retromarcia" (cambio automatico in posizione "parcheggio").
- Accendere le luci di emergenza.
- Tirare fuori gli attrezzi di sollevamento e la ruota di scorta dall'alloggiamento.
- Prima di inserire il cric, bloccare anteriormente e posteriormente la ruota diagonalmente opposta a quella da togliere.
- Allentare ma non togliere i bulloni ruota con una chiave girandola in senso antiorario.
- Sollevare il cric finché la scanalatura della sua parte superiore si inserisce nell'incavo del telaio, vedi figure.
- Azionare il cric con movimenti lenti e uniformi, utilizzando la manovella del cric.
- Sollevare il veicolo in modo che uno pneumatico gonfiato si stacchi appena da terra; togliere i bulloni e la ruota.
- Installare la ruota e poi serrare un po' ciascun bullone in modo che la ruota resti in sede sul mozzo.
- Abbassare il veicolo e serrare a fondo i bulloni in ordine incrociato girando la chiave in senso orario.

Manutenzione

- Evitare che sulla VITE DEL CRIC si formino accumuli di sporcizia.
- Controllare la targhetta identificativa, mantenere la stessa forma dell'originale.
- Non riconvertire la costruzione del cric da soli.
- Dopo ogni utilizzo, consultare immediatamente il proprio rivenditore Suzuki o un partner di assistenza per l'ispezione e la manutenzione del cric.
- Se l'etichetta (adesivo) è danneggiata, consultare un rivenditore Suzuki o un partner di assistenza.

Latviešu valoda (Latvian)

DOMKRATS-PANTOGRĀFS
LIETOŠANAS ROKASGRĀMATA

CE

Ražotāji:

„RIKENKAKI CO., LTD."
5-6-12 Chiyoda, Sakado-shi, Saitama, 350-0214, Japāna
Tālr.: 049-248-1661
Fakss: 049-284-4340

„CHANGZHOU RIKENSEIKO MACHINERY CO., LTD."
No. 1903 Zhongwu Ave. Zhonglou Changzhou, Jiangsu, ĶĪNA
Tālr.: 0519-327-5284
Fakss: 0519-327-0811

Lūdzam pirms darbību uzsākšanas izlasīt šo LIETOŠANAS ROKASGRĀMATU!

Standarts: EN 1494:2000+A1:2008

Brīdinājumi!
- DOMKRATU drīkst izmantot vienīgi riepu nomaiņai, nevis jebkādiem citiem nolūkiem.
- Neizmantojiet DOMKRATU vairāk par 50 reizēm.
- Nav paredzēts cilvēku pacelšanai.
- Nekad nelieniet zem transportlīdzekļa, kas pacelts ar domkratu.
- Defektīvu domkratu vai domkratu, kuriem nav veikta atbilstoša tehniskā apkope, izmantošana ir ārkārtīgi bīstama.

Brīdinājuma uzlīmes piktogrammas nozīme

Šis simbols apzīmē potenciālu bīstamību, kas var izraisīt nāvi vai radīt smagus ievainojumus.

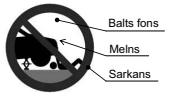

Šis simbols nozīmē, ka Jūs nekādā gadījumā nedrīkstat līst zem transportlīdzekļa, ja tas ir pacelts ar domkratu.

Pantogrāfa domkrata detaļas nosaukums
Skat FIG. 1 attēlu lapā angļu valodā.

Tehniskie dati un izmantojums
Skat FIG. 2 attēlu lapā angļu valodā.

A: AUGŠĒJAIS TURĒTĀJS	F: DOMKRATA SKRŪVE	X: DOMKRATA AUGSTUMS (mm)
B: PAMATNE	G: NOMINĀLĀ SLODZE (t)	Y: SLODZE (t)
C: AUGŠĒJĀ SVIRA	H_1: MINIMĀLAIS AUGSTUMS (mm)	M: MODELIS
D: APAKŠĒJĀ SVIRA	H_2: MAKSIMĀLAIS AUGSTUMS (mm)	T: TIPS
E: ROKTURA SAVIENOJUMS	H_3: IZPILDĪJUMA NODROŠINĀJUMA AUGSTUMS (mm)	

Apstākļi, kādos izmantošana ir aizliegta
- Ja temperatūra ir zemāka par -40°C.
- Uz dubļainas vai smilšainas virsmas.
- Stāvā nogāzē.
- Ekstremālos laikapstākļos: lietusgāzes, taifūna, ciklona, sniegputeņa, pērkona negaisa utt. laikā.
- Nedrīkst celt bīstamas kravas, piemēram: izkausētu metālu, skābas vielas, radioaktīvas vielas vai īpaši trauslas preces.
- Nedrīkst tieši saskarties ar pārsegu.
- Nedrīkst lietot uz kuģa.
- Nedrīkst izmantot uz nelīdzenas virsmas.

Lietošanas instrukcija

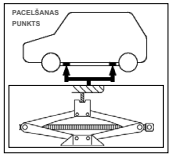

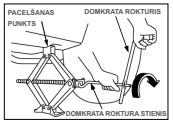

Ik reizi mainot riteni, notīriet koroziju riteņa iekšpusē un uz transportlīdzekļa riteņa montēšanas virsmas.
Papildu informācija:
Lūdzu, rīkojieties tā, kā norādīts "Lietošanas instrukcijā".
Pārbaudot domkratu un paceļamo kravu, novietojiet domkratu uz līdzenas virsmas.
Papildu kravu drīkst pacelt vienīgi tad, ja tā ir droši nostiprināta.
- Novietojiet automobili uz gludas, līdzenas virsmas un iedarbiniet stāvbremzi.
- Pārnesumkārbas sviru novietojiet pozīcijā „atpakaļgaita" (automātiskās pārnesumkārbas sviru pozīcijā „park").
- Ieslēdziet avārijas gaismas.
- No glabāšanas nodalījuma izņemiet domkrata aprīkojumu un rezerves riteni.
- Pirms domkrata izmantošanas, no priekšas un aizmugures nobloķējiet riteni, kas atrodas pa diagonāli no maināmā riteņa.
- Atbrīvojiet, bet nenoskrūvējiet uzgriežņus, atslēgu pagriežot pretēji pulksteņrādītāja virzienam.
- Paceliet domkratu līdz domkrata galviņas rieva ietilpst rāmī, skat. attēlu.
- Darbiniet domkratu lēni un piesardzīgām kustībām, izmantojot domkrata rokturi.
- Paceliet transportlīdzekli tā, lai tukšā riepa nedaudz atrautos no zemes, noņemiet uzgriežņus un riteni.
- Uzstādiet riteni un viegli piegrieziet katru uzgriezni, ritenim ir jānostiprinās uz rumbas.
- Nolaidiet transportlīdzekli un pievelciet uzgriežņus krusteniskā secībā, atslēgu griežot pulksteņrādītāja virzienā.

Apkope
- Raugieties, lai uz DOMKRATA SKRŪVES nekrātos netīrumi.
- Pārbaudiet nosaukuma plāksni, jo tai ir jāsaglabājas sākotnējā formā.
- Nedrīkst patstāvīgi veikt domkrata izjaukšanu.
- Pēc jebkuras izmantošanas nekavējoties sazinieties ar Suzuki dīleri vai servisa partneri, lai veiktu domkrata apskati un tehnisko apkopi.
- Ja etiķete (uzlīme) ir bojāta, lūdzu, sazinieties ar Suzuki dīleri vai servisa partneri.

lietuviškai (Lithuanian)

TRAPECINIS DOMKRATAS
INSTRUKCIJŲ VADOVAS

CE

Gamintojai:

RIKENKAKI CO., LTD.
5-6-12 Chiyoda, Sakado-shi, Saitama, 350-0214 Japonija
Tel.: 049-248-1661
Faks.:049-284-4340

CHANGZHOU RIKENSEIKO MACHINERY CO., LTD.
Nr. 1903 Zhongwu Ave. Zhonglou Changzhou, Jiangsu KINIJA
Tel.: 0519-327-5284
Faks.:0519-327-0811

Perskaitykite šį INSTRUKCIJŲ VADOVĄ prieš naudodami gaminį!

Norma: EN 1494:2000+A1:2008

Perspėjimas ir įspėjimas
- DOMKRATAS naudojamas tik padangų keitimui, jis netinka naudoti kitais tikslais.
- DOMKRATĄ naudokite ne daugiau kaip 50 kartų.
- Keliamame automobilyje neturi būti žmonių.
- Niekada neljskite po domkratu pakeltu automobiliu.
- Ypač pavojinga naudoti sugedusį ar netinkamai prižiūrimą domkratą.

Perspėjimo etiketės piktogramų reikšmė

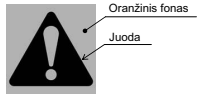

Šis simbolis nurodo galimą pavojų, kuris gali būti mirtinas arba sukelti sunkius sužalojimus.

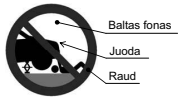

Šis simbolis rodo, kad niekada neturėtumėte lįsti po automobiliu, kai jį laiko domkratas.

Trapecinio domkrato dalių pavadinimas
Žr. 1 FIG. angliškame puslapyje.

Techniniai duomenys ir naudojimas
Žr. 2 FIG. angliškame puslapyje.

A	: VIRŠUTINIS LAIKIKLIS	F	: DOMKRATO SRAIGTAS	X	: DOMKRATO AUKŠTIS (mm)
B	: PAGRINDAS	G	: VARDINĖ APKROVA (t)	Y	: APKROVA (t)
C	: VIRŠUTINIS PETYS	H_1	: MAŽIAUSIAS AUKŠTIS (mm)	M	: MODELIS
D	: APATINIS PETYS	H_2	: DIDŽIAUSIAS AUKŠTIS (mm)	T	: TIPAS
E	: RANKENOS JUNGTIS	H_3	: EKSPLOATACINIŲ SAVYBIŲ UŽTIKRINIMO AUKŠTIS (mm)		

Netinkamos naudojimo sąlygos
- Kai temperatūra žemesnė kaip -40°C.
- Ant purvo ar smėlėto grindinio.
- Ant kelio su dideliu nuolydžiu.
- Sudėtingomis gamtinėmis sąlygomis: liūtis su audra, taifūnas, ciklonas, pūga, audra ir t. t.
- Kelti pavojingą krovinį, pvz.: lydytą metalą, rūgštines, radioaktyvias medžiagas ar itin birias medžiagas.
- Tiesioginis kontaktas su gaubtu.
- Naudoti laive.
- Ant skirtingų lygių paviršiaus.

Eksploatavimo instrukcijos

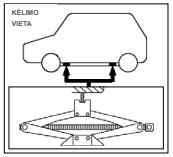

Keičiant ratą visuomet pašalinkite koroziją, kuri gali būti ratų viduje ir ant rato tvirtinimo paviršiaus.
Detali informacija:
Dirbkite laikydamiesi „eksploatavimo instrukcijų“.
Naudokite domkratą ant lygaus paviršiaus, patikrindami domkratą ir keliamą krovinį.
Negalima dirbti po pakeltu kroviniu, nebent krovinys yra saugiai pritvirtintas.

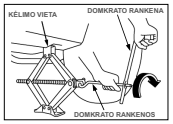

- Pastatykite automobilį ant lygaus, horizontalaus paviršiaus ir įjunkite stabdį.
- Įjunkite atbulinę pavarą („stovėjimo“ padėtį, jei automobilis yra su automatine pavarų dėže).
- Įjunkite įspėjamąsias mirksinčias šviesas.
- Išimkite kėlimo įrankius ir atsarginę padangą iš saugojimo vietos.
- Prieš naudodami domkratą užblokuokite įstrižai priešais nuimamą ratą esančio rato priekį ir galą.
- Atlaisvinkite rato veržles, bet jų neišimkite, sukdami raktą prieš laikrodžio rodyklę.
- Kelkite domkratą, kol jo galvutės griovelis įsistatys į iškilimą rėme, žr. iliustracijas.
- Rankena sukite domkratą lėtais, sklandžiais judesiais.
- Kelkite automobilį tiek, kad pripūsta padanga šiek tiek pakiltų nuo paviršiaus, ištraukite veržles ir nuimkite ratą.
- Uždėkite ratą, po to šiek tiek priveržkite kiekvieną veržlę, ratas turi prisispausti ant stebulės.
- Nuleiskite automobilį ir iki galo kryžmiškai priveržkite rato veržles, sukdami raktą pagal laikrodžio rodyklę.

Priežiūra
- Saugokite DOMKRATO SRAIGTĄ, kad ant jo nesusikauptų nešvarumai.
- Patikrinkite duomenų lentelę, išsaugokite originalią formą.
- Nekeiskite domkrato konstrukcijos patys.
- Jei taip atsitiktų, iš karto kreipkitės į „Suzuki“ pardavimo atstovą ar Techninės priežiūros partnerį, kad apžiūrėtų ir pataisytų domkratą.
- Jei etiketė (lipdukas) pažeistas, kreipkitės į „Suzuki“ pardavimo atstovą ar Techninės priežiūros partnerį.

Polski (Polish)

PODNOŚNIK TRAPEZOWY
INSTRUKCJA OBSŁUGI

CE

Producenci:

RIKENKAKI CO., LTD.
5-6-12 Chiyoda, Sakado-shi, Saitama, 350-0214 Japonia
Tel.: 049-248-1661
Faks: 049-284-4340

CHANGZHOU RIKENSEIKO MACHINERY CO., LTD.
No. 1903 Zhongwu Ave. Zhonglou Changzhou, Jiangsu, CHINY
Tel.: 0519-327-5284
Faks: 0519-327-0811

Przed użyciem produktu przeczytaj tę INSTRUKCJĘ OBSŁUGI!

Norma: EN 1494:2000+A1:2008

Ważne informacje i ostrzeżenia

- PODNOŚNIK może być używany wyłącznie w celu wymiany opon, w żadnych innych celach.
- Nie używaj PODNOŚNIKA więcej niż 50 razy.
- Zabrania się podnoszenia samochodów z ludźmi w środku.
- Nigdy nie wchodź pod pojazd podniesiony podnośnikiem.
- Używanie uszkodzonych lub niewłaściwie konserwowanych podnośników jest bardzo niebezpieczne.

Znaczenie piktogramu na naklejce ostrzegawczej

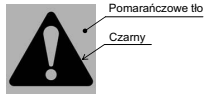

Ten symbol oznacza potencjalne zagrożenie, które może skutkować śmiercią lub poważnymi urazami.

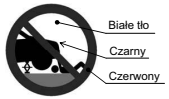

Ten symbol oznacza, że nie należy nigdy wchodzić pod pojazd podniesiony podnośnikiem.

Nazwy części podnośnika trapezowego

Patrz FIG. 1 na stronie w języku angielskim.

Dane techniczne i zastosowanie

Patrz FIG. 1 na stronie w języku angielskim.

A : GŁOWICA	F : ŚRUBA PODNOŚNIKA	X : WYSOKOŚĆ PODNOSZENIA (mm)
B : PODSTAWA	G : OBCIĄŻENIE NOMINALNE (t)	Y : OBCIĄŻENIE (t)
C : GÓRNE RAMIĘ	H_1 : MINIMALNA WYSOKOŚĆ (mm)	M : MODEL
D : DOLNE RAMIĘ	H_2 : MAKSYMALNA WYSOKOŚĆ (mm)	T : TYP
E : UCHWYT KORBY	H_3 : WYSOKOŚĆ SKUTECZNA PODNOSZENIA (mm)	

Kiedy nie wolno używać podnośnika

- Jeśli temperatura jest niższa niż -40°C.
- Na mokrym podłożu lub piachu.
- Na bardzo nachylonych drogach.
- W skrajnych warunkach pogodowych: burze z deszczem, tajfuny, cyklony, burze śnieżne, burze z piorunami itp.
- Do podnoszenia niebezpiecznych, ciężkich obiektów, np.: roztopiony metal, kwasy, substancje radioaktywne lub wyjątkowo kruche przedmioty.
- W przypadku bezpośredniego kontaktu z maską samochodu.
- Na lodziach.
- Jeśli podłoże jest nierówne.

Instrukcja obsługi

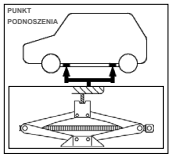

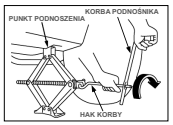

Zawsze przed wymianą koła usuwaj wszelkie ślady korozji obecne po wewnętrznej stronie koła lub na powierzchni montażowej pojazdu.
Szczegóły:
Obsługuj podnośnik zgodnie z instrukcją obsługi.
Używaj podnośnika na płaskim podłożu i monitoruj podnośnik oraz obciążenie.
Nie wchodź pod podnoszone obciążenie, chyba że obciążenie zostało odpowiednio zabezpieczone.

- Zaparkuj samochód na płaskiej, równej powierzchni i mocno zaciągnij hamulec.
- Ustaw bieg na „wsteczny" (w przypadku skrzyni automatycznej na „parkowanie").
- Włącz światła awaryjne.
- Wyjmij podnośnik i zapasowe koło z bagażnika.
- Przed użyciem podnośnika zablokuj przód i tył koła po przekątnej od wymienianego koła.
- Poluzuj (ale nie usuwaj) nakrętki koła, obracając klucz w kierunku przeciwnym do ruchu wskazówek zegara.
- Podnieś podnośnik, tak aby rowek w głowicy objął występ ramy, jak pokazano na rysunkach.
- Obsługuj podnośnik powolnymi i płynnymi uchami za pomocą korby.
- Podnieś pojazd na taką wysokość, aby napompowana opona nieznacznie odstawała od podłoża. Zdejmij nakrętki i koło.
- Załóż koło, następnie delikatnie dokręć każdą nakrętkę. Koło musi spoczywać na piaście.
- Opuść pojazd i całkowicie dokręć nakrętki w kolejności po przekątnej, obracając klucz w kierunku zgodnym z ruchem wskazówek zegara.

Konserwacja

- Usuwaj ze ŚRUBY PODNOŚNIKA wszelki nagromadzony brud.
- Sprawdzaj tabliczkę znamionową. Zachowaj oryginalny kształt.
- Nie modyfikuj samodzielnie konstrukcji podnośnika.
- Po każdym Użyciu, należy natychmiast skontaktować się ze sprzedawcą Suzuki lub partnerem serwisowym w celu kontroli lub konserwacji podnośnika.
- Jeśli etykieta (naklejka) jest uszkodzona, należy skontaktować się ze sprzedawcą Suzuki lub Partnerem serwisowym.

Português (Portuguese)

MACACO PANTOGRÁFICO
MANUAL DE INSTRUÇÕES

CE

Fabricantes:

RIKENKAKI CO., LTD.
5-6-12 Chiyoda, Sakado-shi, Saitama, 350-0214 Japão
Tel.: 049-248-1661
Fax: 049-284-4340

CHANGZHOU RIKENSEIKO MACHINERY CO., LTD.
No. 1903 Zhongwu Ave. Zhonglou Changzhou, Jiangsu CHINA
Tel.: 0519-327-5284
Fax: 0519-327-0811

Por favor leia o manual de instruções antes da utilização!

Norma: EN 1494:2000+A1:2008

Cuidado e perigo

- O macaco apenas pode ser usado para substituir pneus e nunca para qualquer outro propósito.
- Não utilize o macaco mais de 50 vezes.
- Não utilizar para elevar pessoas.
- Nunca fique debaixo de um veículo elevado por um macaco.
- O uso de macacos defeituosos ou com manutenção inadequada é extremamente perigoso.

Significado do pictograma na etiqueta de perigo

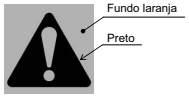

Este símbolo assinala um perigo potencial que pode resultar em morte ou ferimentos graves.

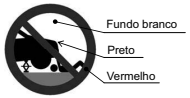

Este símbolo assinala a interdição de se colocar debaixo de um veículo quando este está a ser elevado por um macaco.

Designação das peças do macaco pantográfico

Ver FIG. 1 nas instruções em inglês.

Dados Técnicos e Utilização

Ver FIG. 2 nas instruções em inglês.

A : PLATAFORMA SUPERIOR	F : EIXO DO MACACO	X : ALTURA DO MACACO (mm)
B : BASE	G : CARGA NOMINAL (tonelada)	Y : CARGA (tonelada)
C : BRAÇO SUPERIOR	H_1 : ALTURA MÍNIMA (mm)	M : MODELO
D : BRAÇO INFERIOR	H_2 : ALTURA MÁXIMA (mm)	T : TIPO
E : JUNTA DE ARTICULAÇÃO	H_3 :ALTURA DE UTILIZAÇÃO SEGURA (mm)	

Não usar nas seguintes condições

- Temperaturas abaixo dos -40°C.
- Chão instável ou de areia.
- Estradas muito inclinadas
- Condições meteorológicas extremas: tempestade, furacão, ciclone, nevão, trovoadas, etc.
- Cargas perigosas e pesadas tais como: metal fundido, substâncias ácidas, substâncias radioativas ou materiais frágeis.
- Em contacto direto com a carroçaria.
- Dentro de um barco.
- Chão desnivelado.

Instruções de utilização

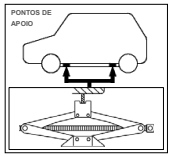

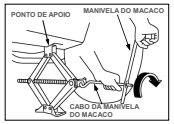

Ao trocar uma roda, remova qualquer vestígio de ferrugem presente no interior da roda ou na superfície de montagem da roda do veículo.
Descrição:
Por favor siga as instruções de acordo com as "instruções de utilização".
Utilize o macaco num chão nivelado enquanto o instala e verifique a carga.
Não deve utilizar o macaco com cargas muito pesadas salvo se estas estiverem amarradas de forma segura.

- Estacione o carro num local plano, chão nivelado e trave o carro de forma segura.
- Coloque a transmissão em "marcha-atrás" (transmissão automática em "estacionar (P)").
- Ligue os quatro piscas.
- Retire as peças do macaco e a roda suplente da mala.
- Trave a roda da frente e de trás diagonalmente opostas à roda que vai trocar antes de colocar o macaco.
- Solte, mas não retire completamente as porcas parafusos da roda no sentido dos ponteiros do relógio.
- Eleve o macaco até chegar à altura necessária de acordo com o indicado na tabela da figura acima.
- Manuseie o macaco com precaução, movimentos lentos, ao utilizar a manivela do macaco.
- Eleve o veículo até conseguir retirar a roda de forma a não raspar o chão, retire as porcas parafusos e a roda.
- Instale a roda, aperte levemente cada porca parafuso, a roda deve ficar bem centrada.
- Depois de descer o veículo, aperte firmemente as porcas parafusos uma por uma no sentido contrário aos ponteiros do relógio.

Manutenção

- Por favor mantenha o EIXO DO MACACO limpo e sem sujidade acumulada.
- Verifique a placa de identificação, mantenha a forma original.
- Não altere por sua iniciativa a estrutura do macaco.
- Depois de qualquer Utilização, consulte imediatamente o seu Concessionário Suzuki ou Parceiro de Assistência para inspeção ou manutenção do Macaco.
- Se a Etiqueta (autocolante) estiver danificada, por favor, consulte o seu Concessionário Suzuki ou Parceiro de Assistência.

Română (Romanian)

CRIC PANTOGRAF
MANUAL DE INSTRUCŢIUNI

CE

Fabricanţi:

RIKENKAKI CO., LTD.
5-6-12 Chiyoda, Sakado-shi, Saitama, 350-0214 Japonia
Tel.: 049-248-1661
Fax: 049-284-4340

CHANGZHOU RIKENSEIKO MACHINERY CO., LTD.
No. 1903 Zhongwu Ave. Zhonglou Changzhou, Jiangsu CHINA
Tel.: 0519-327-5284
Fax: 0519-327-0811

Citiţi acest MANUAL DE INSTRUCŢIUNI înainte de utilizare!

Norma: EN 1494:2000+A1:2008

Atenţionări şi avertismente

- CRICUL poate fi folosit doar pentru înlocuirea anvelopelor, nu în alte scopuri.
- Utilizaţi CRICUL de cel mult 50 de ori.
- În vehicul nu trebuie să se afle nicio persoană.
- Nu intraţi niciodată sub vehiculul ridicat pe cric.
- Utilizarea cricurilor defecte sau întreţinute necorespunzător este extrem de periculoasă.

Semnificaţia pictogramelor de pe eticheta de atenţionare

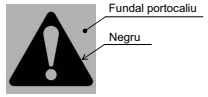

Acest simbol indică un pericol potenţial care ar putea duce la moarte sau la accidentare gravă.

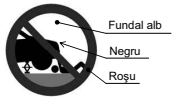

Acest simbol vă interzice să intraţi sub vehicul când vehiculul este ridicat pe cric.

Denumirea pieselor cricului manual

Consultaţi FIG 1 pe pagina în engleză.

Date tehnice şi utilizare

Consultaţi FIG 2 pe pagina în engleză.

A: PLATFORMA	F: ŞURUBUL CRICULUI	X: ÎNĂLŢIMEA CRICULUI (mm)
B: TALPA	G: SARCINA NOMINALĂ (t)	Y: SARCINA (t)
C: BRAŢUL SUPERIOR	H_1: ÎNĂLŢIMEA MINIMĂ (mm)	M: MODELUL
D: BRAŢUL INFERIOR	H_2: ÎNĂLŢIMEA MAXIMĂ (mm)	T: TIPUL
E: ARTICULAŢIA PT. LEVIER	H_3: ÎNĂLŢIMEA PENTRU ATINGEREA PERFORMANŢEI (mm)	

Condiţii în care este interzisă utilizarea

- Când temperatura este sub -40°C.
- Pe teren noroios sau nisipos.
- Pe o pantă abruptă.
- În condiţii meteorologice extreme: furtună cu ploaie, taifun, ciclon, furtună de zăpadă, furtună cu descărcări electrice etc.
- Dacă vehiculul este încărcat cu produse grele sau periculoase, cum ar fi: metal topit, acid, substanţe radioactive sau produse fragile.
- Contact direct cu capota.
- Utilizarea pe o ambarcaţiune.
- Teren denivelat.

Instrucţiuni de utilizare

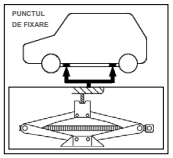

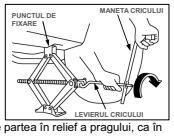

Când înlocuiţi o roată, îndepărtaţi întotdeauna rugina care poate fi prezentă pe interiorul roţii şi pe suprafaţa de montare a roţii pe vehicul.
Detalii:
Utilizaţi cricul conform instrucţiunilor de utilizare.
Utilizaţi cricul pe un teren plan, verificând cricul şi sarcina.
Nu utilizaţi cricul dacă vehiculul este încărcat, decât dacă încărcătura este bine fixată.

- Parcaţi maşina pe un teren orizontal şi plan şi acţionaţi ferm frâna de mână.
- Aduceţi transmisia în marşarier (transmisia automată în poziţia de parcare).
- Porniţi luminile de avarie.
- Scoateţi instrumentele pentru cric şi roata de rezervă din compartimentul acestora.
- Înainte de a utiliza cricul, blocaţi partea din faţă şi din spate a roţii care este diagonal opusă faţă de roata care urmează a fi desfăcută.
- Destrângeţi, dar nu înlăturaţi prizoanele rotind cheia în sens antiorar.
- Ridicaţi cricul până când adâncitura de pe capul cricului se potriveşte pe partea în relief a pragului, ca în ilustraţii.
- Acţionaţi cricul cu o mişcare lentă şi lină, folosind maneta cricului.
- Ridicaţi vehiculul astfel încât anvelopa umflată să fie doar puţin ridicată de la sol, iar apoi îndepărtaţi prizoanele şi roata.
- Montaţi roata, iar apoi strângeţi uşor fiecare prizon; roata trebuie să se afle pe butuc.
- Coborâţi vehiculul şi strângeţi complet prizoanele în cruce, rotind cheia în sens orar.

Întreţinerea

- Nu lăsaţi să se adune murdărie pe ŞURUBUL CRICULUI.
- Verificaţi plăcuţa cu denumirea şi păstraţi forma iniţială.
- Nu dezasamblaţi şi nu reasamblaţi cricul.
- După fiecare utilizare, consultaţi imediat dealerul Suzuki sau partenerul de service pentru verificarea şi întreţinerea cricului.
- Dacă eticheta (autocolantul) este deteriorată, vă rugăm să consultaţi dealerul Suzuki sau partenerul de service.

Slovensky (Slovak)

PANTOGRAFICKÝ ZVIHÁK
NÁVOD NA POUŽITIE

CE

Výrobcovia:

RIKENKAKI CO., LTD.
5-6-12 Chiyoda, Sakado-shi, Saitama, 350-0214 Japonsko
Tel.: 049-248-1661
Fax:049-284-4340

CHANGZHOU RIKENSEIKO MACHINERY CO., LTD.
No. 1903 Zhongwu Ave. Zhonglou Changzhou, Jiangsu, ČÍNA
Tel.: 0519-327-5284
Fax:0519-327-0811

Pred používaním si prečítajte tento NÁVOD NA OBSLUHU!

Technická norma: EN 1494:2000+A1:2008

Upozornenia a výstrahy

- Zdvihák je nie je možné použiť na žiadne iné účely okrem výmeny pneumatík.
- Tento zdvihák nepoužívajte viac ako 50-krát.
- Nesmie sa používať na zdvíhanie osôb.
- Nikdy nepracujte pod vozidlom, keď je zdvihnuté pomocou zdviháka.
- Používanie vadných alebo nedostatočne udržiavaných zdvihákov je veľmi nebezpečné.

Význam piktogramov a výstražných štítkov

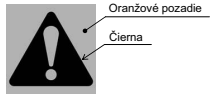

Tento symbol označuje potenciálne nebezpečenstvo, ktoré by mohlo mať za následok smrť alebo vážne zranenie.

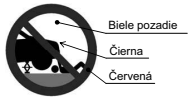

Tento symbol znamená zákaz pracovať pod vozidlom, keď je zdvihnuté pomocou zdviháka.

Názvy dielov pantografického zdviháka

Pozri FIG. 1 v anglickom texte.

Technické parametre a použitie

Pozri FIG. 2 v anglickom texte.

A	: HORNÁ PODPERA	F	: SKRUTKA ZDVIHÁKA	X	: VÝŠKA ZDVIHÁKA (mm)
B	: ZÁKLADNÁ DOSKA	G	: MENOVITÉ ZAŤAŽENIE (v tonách)	Y	: ZAŤAŽENIE (v tonách)
C	: HORNÉ RAMENO	V_1	: MINIMÁLNA VÝŠKA (mm)	M	: MODEL
D	: SPODNÉ RAMENO	V_2	: MAXIMÁLNA VÝŠKA (mm)	T	: TYP
E	: KĽB KĽUKY	V_3	: PREVÁDZKOVÁ VÝŠKA (mm)		

Podmienky, za ktorých sa zdvihák nesmie používať

- Pri teplote pod -40°C.
- Na rozbahnenej alebo piesčitej pôde.
- Na ceste s veľkým sklonom.
- Pri extrémnych klimatických podmienkach: búrka, tajfún, cyklón, snehová búrka, búrka s prítomnosťou bleskov, atď.
- Zdvíhanie veľmi ťažkých predmetov, napríklad: roztavený kov, kyselinové látky, rádioaktívne látky alebo mimoriadne krehké predmety.
- Priamy kontakt s kapotou.
- Používanie na lodi.
- Nerovný povrch.

Návod na používanie

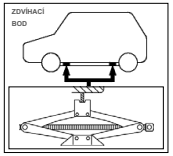

Pri výmene kolesa vždy odstráňte koróziu, ktorá môže byť prítomná na vnútornej strane kolesa a na náboji kolesa.
Podrobnosti:
Pri práci postupujte podľa „návodu na obsluhu".
Funkčnosť zdviháka a bremeno kontrolujte na rovnom povrchu.
Pri používaní sa záťaž nesmie zvyšovať, ak bremeno nie je riadne upevnené.

- Vozidlo zaparkujte na rovnom a pevnom povrchu a zatiahnite parkovaciu brzdu.
- V prípade ručnej prevodovky zaraďte „spiatočku" (v prípade automatickej prevodovky páku prepnite do polohy „Park").
- Zapnite výstražné svetlá.
- Z batožinového priestoru vyberte nástroje na zdvíhanie a rezervné koleso.
- Pred zdvihaním zaistite koleso nachádzajúce sa uhlopriečne od kolesa, ktoré sa bude zdvíhať tak, že spredu a zozadu vložite kliny.
- Matice uvoľnite otáčaním kľúča na matice doľava, ale neodstraňujte ich.
- Zdvihák zdvíhajte, kým zúbkovaná podpera ložnej plochy zapadne do rámu (pozri obrázok).
- Zdvihák zdvíhajte pomalým a plynulým otáčaním kľuky zdviháka.
- Vozidlo zdvihnite do takej výšky, aby koleso s nahustenou pneumatikou bolo mierne nad povrchom, odstráňte matice a koleso.
- Založte koleso, potom mierne utiahnite každú maticu tak, aby koleso pevne dosadalo na náboj kolesa.
- Vozidlo spustite a matice úplne dotiahnite nakríž otáčaním kľúča doprava.

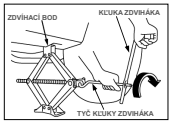

Údržba

- Na SKRUTKE ZDVIHÁKA nesmú byť žiadne nečistoty.
- Zdvihák uchovávajte v pôvodnom tvare. Pozrite si typový štítok.
- Používateľ nesmie upravovať konštrukciu zdviháka.
- Po každom použití sa okamžite obráťte na vášho dodávateľa alebo servisného partnera Suzuki kvôli kontrole a údržbe zdviháka.
- V prípade poškodenia štítka (nálepky) sa obráťte na svojho dodávateľa alebo servisného partnera Suzuki.

Slovensko (Slovene)

DVIGALKA S PANTOGRAFSKIM SISTEMOM
NAVODILA ZA UPORABO

CE

Proizvajalca:

RIKENKAKI CO., LTD.
5-6-12 Chiyoda, Sakado-shi, Saitama, 350-0214 Japonska
Tel.: 049-248-1661
Faks: 049-284-4340

CHANGZHOU RIKENSEIKO MACHINERY CO., LTD.
No. 1903 Zhongwu Ave. Zhonglou Changzhou, Jiangsu KITAJSKA
Tel.: 0519-327-5284
Faks: 0519-327-0811

Prosimo preberite pred uporabo ta NAVODILA ZA UPORABO!

Standard: EN 1494:2000+A1:2008

Obvestilo in opozorilo
- DVIGALKO lahko uporabljate le za menjavo pnevmatik in ne za druge namene.
- DVIGALKO lahko uporabite največ 50-krat.
- Ne dvigujte, kadar so v vozilu osebe.
- Nikoli se ne zadržujte pod vozilom, dvignjenim z dvigalko.
- Uporaba okvarjenih ali neustrezno vzdrževanih dvigalk je zelo nevarna.

Pomen znakov na opozorilnih etiketah

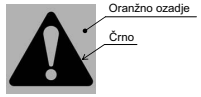

Ta simbol opozarja na morebitni nevarnost, ki lahko povzroči resne ali smrtno nevarne poškodbe.

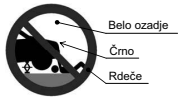

Ta simbol opozarja, da ne smete biti nikoli pod vozilom, ki je dvignjeno z dvigalko.

Nazivi delov dvigalke
Glejte FIG. 1 v angleškem delu navodil.

Tehnični podatki in lastnosti
Glejte FIG. 2 v angleškem delu navodil.

A : ZGORNJI NOSILEC	F : VIJAK DVIGALKE	X: VIŠINA DVIGALKE (mm)
B : PODNOŽJE	G : NAZIVNA OBREMENITEV (t)	Y: OBREMENITEV (t)
C : ZGORNJA ROČICA	H_1 : MINIMALNA VIŠINA (mm)	M : MODEL
D : SPODNJA ROČICA	H_2 : NAJVEČJA VIŠINA (mm)	T : TIP
E : ZGLOB ROČICE	H_3 : VIŠINA Z ZAGOTOVLJENO ZMOGLJIVOSTJO (mm)	

Pogoji, pri katerih uporaba ni dovoljena
- Ko je temperatura nižja od -40°C
- Na blatni ali peščeni podlagi
- Na cesti z velikim naklonom.
- V izrednih vremenskih razmerah: neurje, tajfun, tornado, snežni vihar, nevihta itd.
- Dvigovanje nevarnih bremen, na primer stopljene kovine, kislin, radioaktivnih snovi ali posebno krhkih snovi.
- Neposreden stik z motornim pokrovom
- Uporaba na plovilih
- Uporaba na terenu z različnimi nivoji

Navodila za uporabo

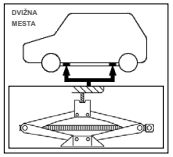

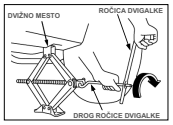

Kadarkoli zamenjate kolo, vedno odstranite rjo, ki se nahaja na površini platišča ali pesta vozila
Podrobnosti:
Prosimo uporabljajte napravo kot je navedeno v navodilih za uporabo.
Dvigalko uporabljajte na ravni površini, preverite dvigalko in breme.
Ne upravljajte pod dvignjenim bremenom, razen če je slednji varno pritrjen.
- Parkirajte vozilo na ravni površini in dobro pritegnite ročno zavoro.
- Prestavite menjalnih v vzvratno prestavo (položaj "park" pri avtomatskih menjalnikih)
- Vklopite varnostne utripalke.
- Vzemite orodje za dviganje in rezervno kolo iz njegovega ležišča.
- Še preden uporabite dvigalko, blokirajte prednji in zadnji del kolesa, ki je diagonalno nasproti kolesa, ki ga nameravate menjati.
- Z vrtenjem ključa v nasprotni smeri urnih kazalcev razrahljajte, vendar ne odstranite kolesnih vijakov.
- Dvigajte dvigalko, dokler njena glava ne doseže šasije - glejte slike.
- Dvigajte z enakomernimi, počasnimi gibi ročice dvigalke.
- Dvignite vozilo toliko, da se pnevmatika malo dvigne od površine, odstranite matice in kolo.
- Zamenjajte kolo in nato rahlo privijte vsako matico, pri čemer mora kolo nasesti na pesto.
- Spustite vozilo, z vrtenjem ključa v smeri urnih kazalcev do konca privijte matice po navzkrižnem zaporedju

Vzdrževanje
- Prosimo preprečite kopičenje nečistoč na DVIGALKI
- Preverite ploščico s podatki, ohranite prvotno obliko.
- Prepovedano je spreminjanje konstrukcije dvigalke.
- Po vsaki uporabi se takoj obrnite na prodajalca opreme Suzuki ali servisnega partnerja za pregled in vzdrževanje dvigalke.
- Če je etiketa (nalepka) poškodovana, se obrnite na prodajalca opreme Suzuki ali servisnega partnerja.

Español (Spanish)

GATO PANTÓGRAFO
MANUAL DE INSTRUCCIONES

CE

Fabricantes:

RIKENKAKI CO.
5-6-12 Chiyoda, Sakado-shi, Saitama, 350-0214 Japón
Tel.: 049-248-1661
Fax:049-284-4340

CHANGZHOU RIKENSEIKO Machinery Co., LTD.
No. 1903 Zhongwu Ave. Zhonglou Changzhou, Jiangsu CHINA
Tel.: 0519-327-5284
Fax:0519-327-0811

Por favor, ¡lea este MANUAL DE INSTRUCCIONES antes de usar el equipo!

Norma: EN 1494:2000 + A1: 2008

Atención y advertencias
- El GATO debe usarse exclusivamente para cambiar neumáticos, no para ningún otro propósito.
- No utilice el GATO más de 50 veces.
- Ninguna persona a bordo.
- Nunca se meta debajo del vehículo elevado con el gato.
- Usar gatos averiados o inapropiadamente mantenidos es extremadamente peligroso.

Significado del pictograma en la etiqueta de precaución

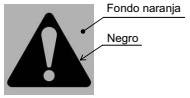

Este símbolo indica un peligro potencial que puede causar la muerte o lesiones graves.

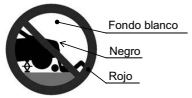

Este símbolo indica que nunca se meta debajo del vehículo cuando esté sostenido por el gato

Nombre de las piezas del gato elevador de tijera
Consulte FIG 1 en la página en inglés.

Datos técnicos y aplicación
Consulte FIG 2 en la página en inglés.

A: SOPORTE SUPERIOR	F: TORNILLO DEL GATO	X: ALTURA DEL GATO (mm)
B: BASE	G: CARGA NOMINAL (ton)	Y: CARGA (ton)
C: BRAZO SUPERIOR	H_1: ALTURA MÍNIMA (mm)	M: MODELO
D: BRAZO INFERIOR	H_2: ALTURA MÁXIMA (mm)	T: TIPO
E: MANIVELA	H_3: ALTURA DE GARANTÍA DE RENDIMIENTO (mm)	

No utilizar en estas condiciones:
- Cuando la temperatura sea inferior a -40°C.
- En un terreno con barro o de arena.
- En una carretera con mucha pendiente.
- En condiciones meteorológicas extremas: tormenta, tifón, ciclón, tormenta de nieve, tormenta eléctrica, etc.
- Carga peligrosa, pesada, por ejemplo: metal fundido, sustancia ácida, sustancia radiactiva o mercancía especialmente frágil.
- Contacto con el capó directamente.
- Uso en un barco.
- Terreno con desnivel.

Instrucciones de uso
Cada vez que se cambia una rueda, elimine siempre la corrosión que pueda presentar en su interior y en la superficie de montaje de la rueda en el vehículo.
Detalles:
Por favor, siga las "Instrucciones de uso".
Utilice el gato sobre un terreno llano, mientras hace las comprobaciones del mismo y de la carga.
No debe utilizarse añadiendo una carga, a menos que la carga se sujete de forma segura

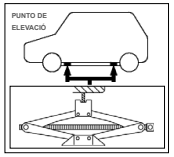

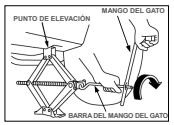

- Aparque el coche en un terreno plano y llano y eche el freno de mano con firmeza.
- Ponga la marcha en "marcha atrás" (cambio automático en "aparcar").
- Encienda las luces de emergencia.
- Retire las herramientas del gato y la rueda de repuesto de la zona de colocación.
- Antes de utilizar el gato, bloquee la parte delantera y trasera de la rueda situada en diagonal con la rueda que se ha de retirar.
- Afloje, pero sin retirar las tuercas de las ruedas, girando la llave en sentido contrario a las agujas de un reloj.
- Eleve el gato hasta que la ranura de la cabeza del gato encaje en el reborde del bastidor, vea las ilustraciones.
- Utilice el gato con un movimiento lento y suave, usando el mango del gato.
- Eleve el vehículo de tal manera que un neumático inflado justo quede por encima de la superficie, retire las tuercas y la rueda.
- Instale la rueda y apriete ligeramente cada tuerca, la rueda debe estar apoyada en el cubo central de la misma.
- Baje el vehículo y apriete completamente las tuercas de la rueda en una secuencia lineal de cruz girando la llave en el sentido de las agujas de un reloj.

Mantenimiento
- Por favor, evite que se acumule suciedad en el TORNILLO DEL GATO.
- Compruebe la placa de características, mantenga la misma forma que tenía en origen.
- No haga cambios en la construcción del gato si es usted un particular.
- Después de cualquier uso, póngase en contacto inmediatamente con su concesionario Suzuki o con un servicio técnico asociado para que realicen las tareas de inspección y mantenimiento del gato.
- Si la etiqueta (pegatina) está dañada, consulte con su concesionario Suzuki o con un servicio técnico asociado.

Svenska (Swedish)

DOMKRAFT
BRUKSANVISNING

CE

Tillverkare:

RIKENKAKI CO., LTD.
5-6-12 Chiyoda, Sakado-shi, Saitama, 350-0214 Japan
Tel: 049-248-1661
Fax: 049-284-4340

CHANGZHOU RIKENSEIKO MACHINERY CO., LTD.
No. 1903 Zhongwu Ave. Zhonglou Changzhou, Jiangsu KINA
Tel: 0519-327-5284
Fax: 0519-327-0811

Läs denna BRUKSANVISNING före användning!

Norm: EN 1494:2000+A1:2008

Säkerhetsnormer och varningar

- DOMKRAFTEN får endast användas till att byta däck, inget annat.
- Använd DOMKRAFTEN högst 50 gånger.
- Lyft aldrig upp personer med den.
- Stå aldrig under ett fordon som lyfts upp med domkraft.
- Användning av en defekt eller bristfälligt underhållen domkraft är extremt farligt.

Betydelse v symbolen på varningsetiketten

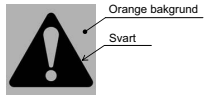

Denna symbol indikerar en potentiell risk som kan leda till livsfara eller allvarliga skador.

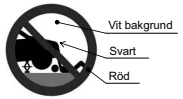

Denna symbol betyder att du aldrig ska stå under fordonet när det är upplyft av domkraften.

Nomenklatur för pantografdomkraften

Se FIG 1 på den engelska sidan.

Tekniska data och tillämpning

Se FIG 2 på den engelska sidan.

A	: TOPPHÅLLARE	F	: DOMKRAFTSSKRUV	X	: DOMKRAFTSHÖJD (mm)
B	: BAS	G	: NOMINELL BELASTNING (t)	Y	: LAST (t)
C	: ÖVRE ARM	H_1	:MIN: HÖJD (mm)	M	: MODELL
D	: UNDRE ARM	H_2	: MAX. HÖJD (mm)	T	: TYP
E	: HANDTAGSFOG	H_3	: HÖJD SOM GARANTERAR PRESTANDAN (mm)		

Förhållanden då domkraften inte får användas

- Då temperaturen understiger -40°C.
- På lerig eller sandig mark.
- På vägar som lutar mycket.
- I extrema naturförhållanden: regnstorm, tyfon, cyklon, snöstorm, åskstorm osv.
- Last av farliga eller tunga ämnen som: smält metall, syror, radioaktiva substanser eller mycket sköra föremål.
- Direktkontakt med huven.
- Användning på båtar.
- Mark med olika nivåer.

Användningsinstruktioner

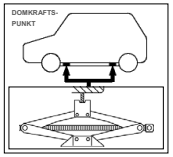

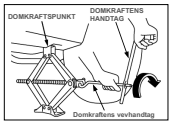

När du byter ett hjul, ska du alltid avlägsna eventuell rost som kan finnas på insidan av hjulet och hjulets monteringsyta.
Detaljer:
Utför åtgärderna i "användningsinstruktioner".
Använd domkraften på jämn mark så att du kan kontrollera domkraften och lasten.
Arbeta inte under upplyft last om inte lasten är fäst ordentligt.

- Parkera bilen på platt, jämn mark och dra åt bromsen ordentligt.
- Ställ växelspaken på "backväxeln" (automatisk växellåda på "parkering").
- Sätt på varningslampan.
- Ta bort domkraftsverktygen och reservdäcket från förvaringsutrymmet.
- Blockera hjulet diagonal motsatt hjulet som ska tas bort bade framtill och baktill innan du använder domkraften.
- Lossa men ta inte bort hjulmuttrarna genom att vrida nyckeln medurs.
- Lyft upp domkraften till dess skåra passar in i ramens utrymme som i illustrationerna.
- Använd domkraften med långsamma, mjuka rörelser genom att veva.
- Lyft fordonet så att ett pumpat däck är precis ovanför marken. Ta bort muttrarna och hjulet.
- Installera hjulet och dra sedan åt varje mutter något. Hjulet ska sitta på navet.
- Sänk ner fordonet och dra åt hjulmuttrarna ordentligt i en korssekvens genom att vrida nyckeln medurs.

Underhåll

- Se till att DOMKRAFTSSKRUVEN inte blir smutsig.
- Kontrollera märkplåten och se till att formen förblir som den var ursprungligen.
- Ändra inte på domkraftens konstruktion själv.
- Efter varje användning, kontakta omedelbart din Suzuki-återförsäljare eller servicepartner för inspektion och underhåll av domkraften.
- Om etiketten (dekalen) är skadad, kontakta din Suzuki-återförsäljare eller servicepartner.

Türkçe (Turkish)

PANTOGRAF KRİKO
KULLANIM KILAVUZU

CE

İmalatçılar:

RIKENKAKI CO., LTD.
5-6-12 Chiyoda, Sakado-shi, Saitama, 350-0214 Japonya
Tel: 049-248-1661
Faks:049-284-4340

CHANGZHOU RIKENSEIKO MACHINERY CO., LTD.
No. 1903 Zhongwu Ave. Zhonglou Changzhou, Jiangsu ÇİN
Tel: 0519-327-5284
Faks:0519-327-0811

Lütfen çalıştırmadan önce bu KULLANIM KILAVUZUNU okuyun.

Standart: EN 1494:2000+A1:2008

Dikkat ve uyarı

- KRİKO yalnızca lastikleri değiştirmek için kullanılabilir, herhangi başka bir amaç için kullanılamaz.
- KRİKOYU 50 defadan fazla kullanmayın.
- Üzerinde insan taşınamaz.
- Asla kriko ile kaldırılan bir aracın altına girmeyin.
- Kusurlu veya yetersiz bakım yapılan krikoların kullanılması son derece tehlikelidir.

Uyarı etiketlerinin üzerindeki resimlerin anlamları

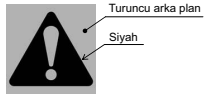

Bu simge, ölüm ya da ciddi yaralanmalara neden olabilecek olası bir tehlikeyi ifade etmektedir.

Bu simge, kriko ile desteklenen bir aracın altına girmemeniz gerektiğini ifade etmektedir.

Pantograf Krikonun Parçalarının Adları

İngilizce sayfadaki FIG. 1'e başvurun.

Teknik Veriler ve Uygulamalar

İngilizce sayfadaki FIG. 2'ye başvurun.

A : ÜST DESTEK	F : KRİKO VİDASI	X : KRİKO YÜKSEKLİĞİ (mm)
B : TABAN	G : NOMİNAL YÜK (t)	Y : YÜK (t)
C : ÜST KOL	H_1 : ASGARİ YÜKSEKLİK (mm)	M : MODEL
D : ALT KOL	H_2 : AZAMİ YÜKSEKLİK (mm)	T : TÜR
E : TUTACAK BİRLEŞME NOKTASI	H_3 : PERFORMANS GÜVENCESİ VERİLEN YÜKSEKLİK (mm)	

Ürünün Kullanılmaması Gereken Koşullar

- Sıcaklık -40°C'nin altında olduğunda.
- Çamurlu ya da kumlu zemin üzerinde.
- Yüksek eğimli yollarda.
- Fırtına, tayfun, kasırga, tipi, gök gürültülü fırtına gibi ağır doğal koşullarda.
- Erimiş metal, asitli madde, radyoaktif madde gibi tehlikeli ağırlıklar ya da kırılgan maddeler yüklenmesi.
- Doğrudan kaporta ile temas ettirilmesi.
- Tekne üzerinde kullanılması.
- Farklı seviyeli zeminlerde.

Çalıştırma talimatları

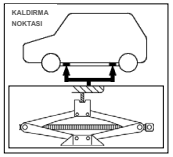

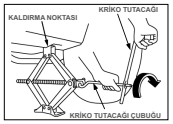

Bir tekerleği değiştirirken, tekerlek içerisinde ya d araç üzerindeki tekerlek monte etme alanında oluşmuş olabilecek paslanma durumlarını ortadan kaldırın.
Ayrıntılar:
Lütfen "çalıştırma talimatlarına" uygun şekilde kullanın.
Krikoyu, kriko ve yükü kontrol ederek, düz zemin üzerinde çalıştırın.
Yüklerin sağlam bir şekilde sabitlenmediği durumlarda, yük kaldırma amaçlı olarak kullanılmamalıdır.

- Arabayı düz bir zemine park edin ve el frenini sıkıca çekin.
- Aracı "geri vitese" alın (otomatik viteste "park" konumu).
- Tehlike ikaz flaşörlerini açın.
- Kaldırma araçları ile yedek lastiği bagaj alanından çıkarın.
- Krikoyu çalıştırmadan önce çıkarılacak lastiğin karşısındaki tekerleklerin önüne ve arkasına takoz yerleştirin.
- İngiliz anahtarını saat yönünün tersine çevirerek tekerlek somunlarını gevşetin, ancak çıkarmayın.
- Krikonun üst kısmı şasinin alt kalıbına gelecek şekilde krikoyu kaldırın. Çizimlere göz atın.
- Krikoyu, tutacağı kullanarak yavaş ve yumuşak hareketlerle çalıştırın.
- Aracı, patlamış olan lastiğin çıkabileceği kadar kaldırın, somunları ve tekerleği çıkarın.
- Tekerleği takın ve somunları teker teker sıkıştırın, tekerleğin yuvaya tam olarak oturması gerekmektedir.
- Aracı indirin ve ingiliz anahtarını saat yönünde çevirerek tekerlek somunlarını çapraz sırayla giderek tamamen sıkıştırın.

Bakım

- Lütfen KRİKO VİDASINDA kir birikmesini engelleyin.
- İsimliği kontrol edin, ürünün orijinal şeklini koruyun.
- Krikonun yapısını özel olarak değiştirmeyin.
- Herhangi bir Kullanımdan sonra, Krikonun kontrol ve bakım işlemleri için hemen Suzuki Satıcınıza veya Hizmet Ortağına danışın.
- Eğer etiket (çıkartma) hasar görürse, lütfen Suzuki Satıcınıza veya Hizmet Ortağına danışın.

BATTERY LABEL SYMBOL MEANINGS

	No smoking, no naked flames, no sparks			Battery acid
	Shield eyes			Note operating instructions
	Keep away from children			Explosive gas

Prepared by

MAGYAR SUZUKI CORPORATION LTD.

January, 2015

Part No. 99011-54P00-01E
Printed in Hungary

TP480