SWIFT

OWNER'S MANUAL

Keep With Vehicle At All Times.
Contains Important Information
On Safety, Operation & Maintenance.

SUZUKI

Way of Life!

This owner's manual applies to the SWIFT series.

SWIFT (3-door model)

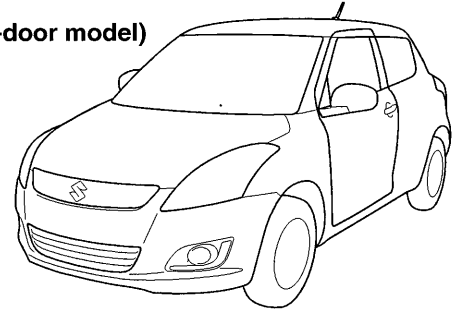

SWIFT (5-door model)

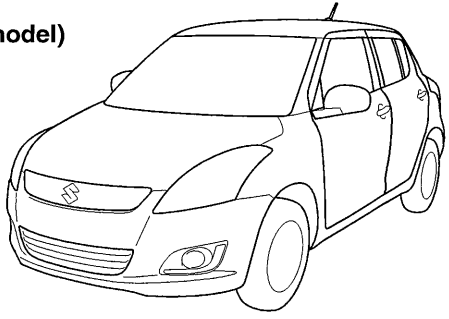

SWIFT Sport (3-door model)

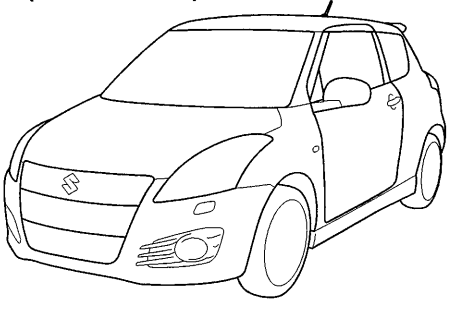

SWIFT Sport (5-door model)

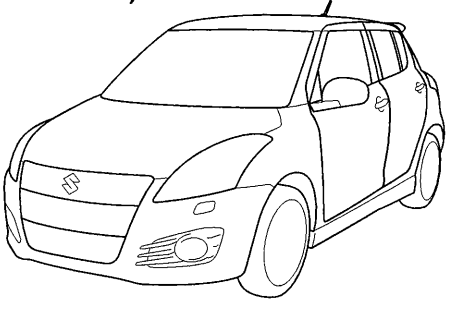

68LM70001

NOTE: The illustrated models are examples of the SWIFT series.

© 2013 **MAGYAR SUZUKI CORPORATION LTD.** All rights reserved.
No part of this document may be reproduced or transmitted in any form or by any means, electronic or mechanical, for any purpose, without the express written permission of Magyar Suzuki Corporation Ltd.

FOREWORD

This manual should be considered a permanent part of the vehicle and should remain with the vehicle when resold or otherwise transferred to a new owner or operator. Please read this manual carefully before operating your new SUZUKI and review the manual from time to time. It contains important information on safety, operation and maintenance.

MAGYAR SUZUKI CORPORATION LTD.

All information in this manual is based on the latest product information available at the time of publication. Due to improvements or other changes, there may be discrepancies between information in this manual and your vehicle. MAGYAR SUZUKI CORPORATION reserves the right to make production changes at any time, without notice and without incurring any obligation to make the same or similar changes to vehicles previously built or sold.

This vehicle may not comply with standards or regulations of other countries. Before attempting to register this vehicle in any other country, check all applicable regulations and make any necessary modifications.

IMPORTANT

⚠WARNING/⚠CAUTION/*NOTICE/*
NOTE

Please read this manual and follow its instructions carefully. To emphasize special information, the symbol ⚠ and the words **WARNING**, **CAUTION**, ***NOTICE*** and ***NOTE*** have special meanings. Pay particular attention to messages highlighted by these signal words:

⚠ WARNING

Indicates a potential hazard that could result in death or serious injury.

⚠ CAUTION

Indicates a potential hazard that could result in minor or moderate injury.

NOTICE

Indicates a potential hazard that could result in vehicle damage.

NOTE:
Indicates special information to make maintenance easier or instructions clearer.

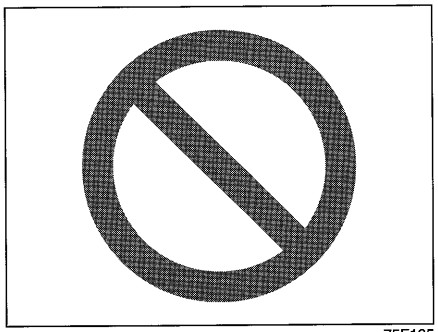

75F135

The circle with a slash in this manual means "Don't do this" or "Don't let this happen".

MODIFICATION WARNING

⚠ WARNING

Do not modify this vehicle. Modification could adversely affect safety, handling, performance, or durability and may violate governmental regulations. In addition, damage or performance problems resulting from modification may not be covered under warranty.

NOTICE

Improper installation of mobile communication equipment such as cellular telephones or CB (Citizen's Band) radios may cause electronic interference with your vehicle's ignition system, resulting in vehicle performance problems. Consult your SUZUKI dealer or qualified service technician for advice on installing such mobile communication equipment.

INTRODUCTION

Thank you for choosing SUZUKI and welcome to our growing family. Your choice was a wise one; SUZUKI products are a great value that will give you years of driving pleasure.

This Owner's Manual was prepared to help you have a safe, enjoyable, and trouble-free experience with your SUZUKI. In it you will learn about the vehicle's operation, its safety features and maintenance requirements. Please read it carefully before operating your vehicle. Afterwards, keep this Manual in the glove box for future reference.

Should you resell the vehicle, please leave this Manual with it for the next owner.

In addition to the Owner's Manual, the other booklets provided with your SUZUKI explain the vehicle's warranties. We recommend you read them as well to familiarize yourself with this important information.

When planning the regular scheduled maintenance of your SUZUKI, we recommend you visit your local SUZUKI dealership. Their factory-trained technicians will provide the best possible service and use only genuine SUZUKI parts and accessories.

NOTE:
"SUZUKI dealer" means Authorized Suzuki Service Workshop (in Europe).

MAGYAR SUZUKI CORPORATION LTD.

RECOMMENDATION OF GENUINE SUZUKI PARTS AND ACCESSORIES USE

SUZUKI strongly recommends the use of genuine SUZUKI parts* and accessories. Genuine SUZUKI parts and accessories are built to the highest standards of quality and performance, and are designed to fit your vehicle's exact specifications.

A wide variety of non-genuine replacement parts and accessories for SUZUKI vehicles are currently available in the market. Using these parts and accessories can affect the vehicle performance and shorten its useful life. Therefore, installation of non-genuine SUZUKI parts and accessories is not covered under warranty.

Non-Genuine SUZUKI Parts and Accessories

Some parts and accessories may be approved by certain authorities in your country.
Some parts and accessories are sold as SUZUKI-authorized replacement parts and accessories. Some genuine SUZUKI parts and accessories are sold as re-use parts and accessories. These parts and accessories are non-genuine SUZUKI parts and accessories and use of these parts is not covered under warranty.

Re-use of Genuine SUZUKI Parts and Accessories

The resale or re-use of the following items which could give rise to safety hazards for users is expressly forbidden:

- Air bag components and all other pyrotechnic items, including their components (e.g. cushion, control devices and sensors)
- Seat belt system, including their components (e.g. webbing, buckles, and retractors)

The air bag and seat belt pretensioner components contain explosive chemicals. These components should be removed and disposed of properly by SUZUKI-authorized service shop or scrap yard to avoid unintended explosion before scrapping.

*The parts remanufactured under SUZUKI's approval can be used as genuine SUZUKI parts in Europe.

SERVICE STATION GUIDE

1. Fuel (see section 1)
2. Engine hood (see section 5)
3. Tire changing tools (see section 8)
4. Engine oil dipstick <Yellow> (see section 7)
5. Automatic transaxle fluid dipstick <Orange> (see section 7)
6. Engine coolant (see section 7)
7. Windshield washer fluid (see section 7)
8. Headlight Washer Fluid (see section 7)
9. Battery (see section 7)
10. Tire pressure (see Tire Information Label on driver's door lock pillar)
11. Spare tire (see section 7)/Flat Tire Repair Kit (see section 8)

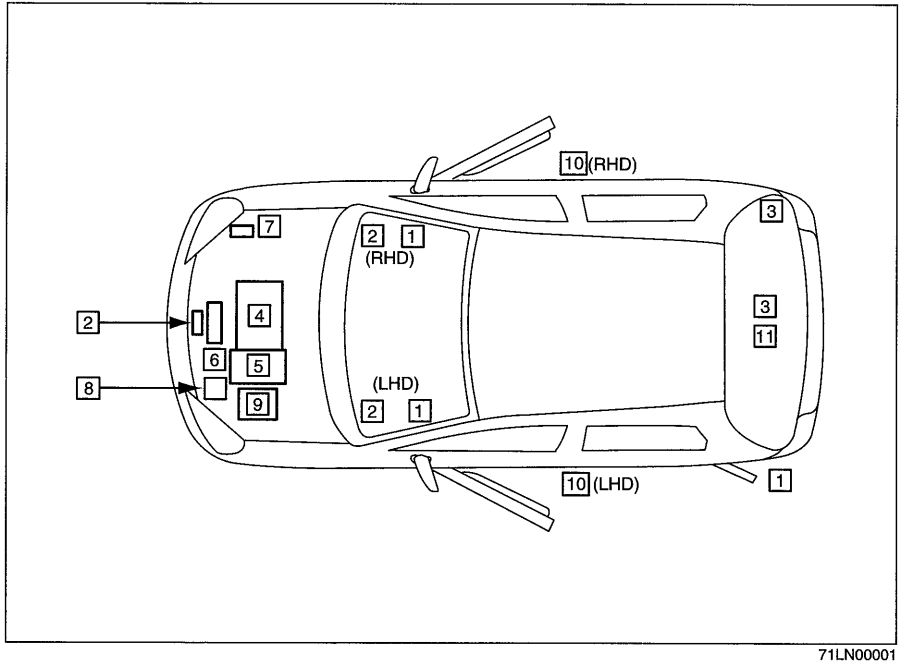

71LN00001

LHD: Left Hand Drive
RHD: Right Hand Drive

MEMO

TABLE OF CONTENTS

FUEL RECOMMENDATION	1
BEFORE DRIVING	2
OPERATING YOUR VEHICLE	3
DRIVING TIPS	4
OTHER CONTROLS AND EQUIPMENT	5
VEHICLE LOADING AND TOWING	6
INSPECTION AND MAINTENANCE	7
EMERGENCY SERVICE	8
APPEARANCE CARE	9
GENERAL INFORMATION	10
SPECIFICATIONS	11
INDEX	12

EXTERIOR

1. Rear Window Wiper (P.2-84)
2. High-mount Stop Light
3. Radio Antenna (P.5-16)
4. Engine Hood (P.5-72)
5. Headlight (P.2-75, 7-38)
6. Windshield Wiper (P.2-82)
7. Fuel Filler Cap (P.5-71)
8. License Plate Light (P.7-41)
9. Tailgate (P.2-6)
10. Rear Combination Light (P.7-41)
11. Front Fog Light (if equipped) (P.2-80, 7-40)
12. Outside Rearview Mirror (P.2-21)
13. Door Locks (P.2-2)

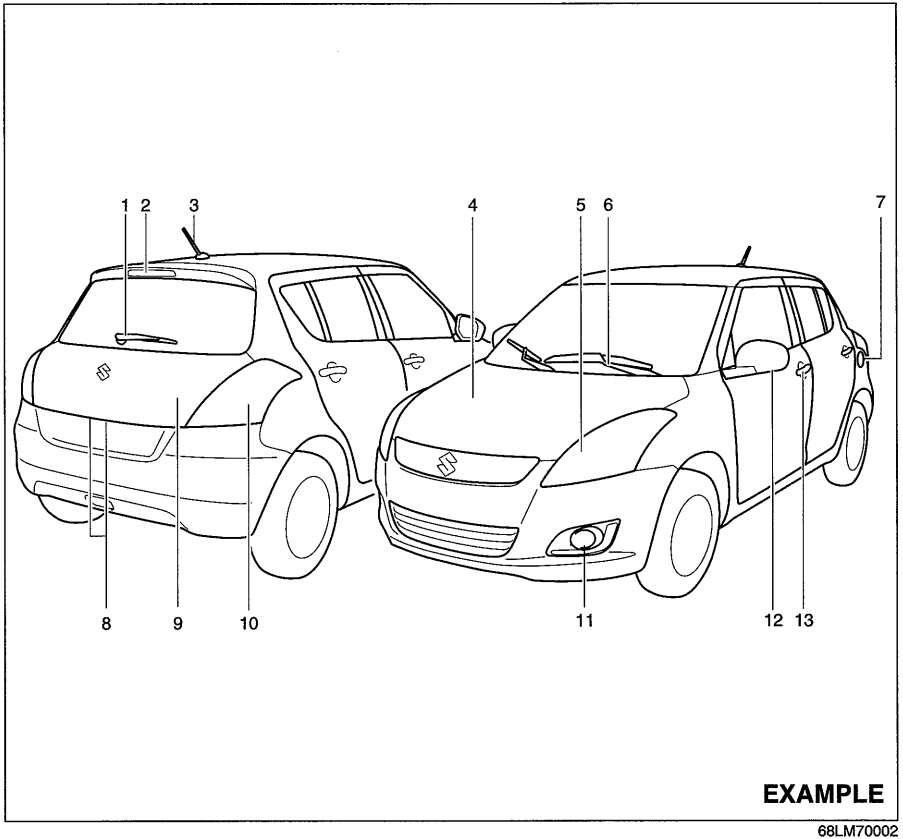

68LM70002

INTERIOR

1. Seat Belts (P.2-29)
2. Side Curtain Air Bags (P.2-50)
3. Interior Light (P.5-74, 7-37)
4. Assist Grip (P.5-76)
5. Electric Mirrors Control Switch (if equipped) (P.2-21)/ Electric Window Controls (P.2-17)
6. Sun Visor (P.5-73)
7. Spot Light (if equipped) (P.5-75, 7-38)
8. Inside Rearview Mirror (P.2-20)
9. Luggage Compartment Cover (P.5-83)
10. Luggage Compartment Light (P.5-75, 7-42)
11. Rear Seat (P.2-26)
12. Side Air Bags (P.2-50)
13. Parking Brake Lever (P.3-9)
14. Front Seats (P.2-22)
15. Gearshift Lever (P.3-18)

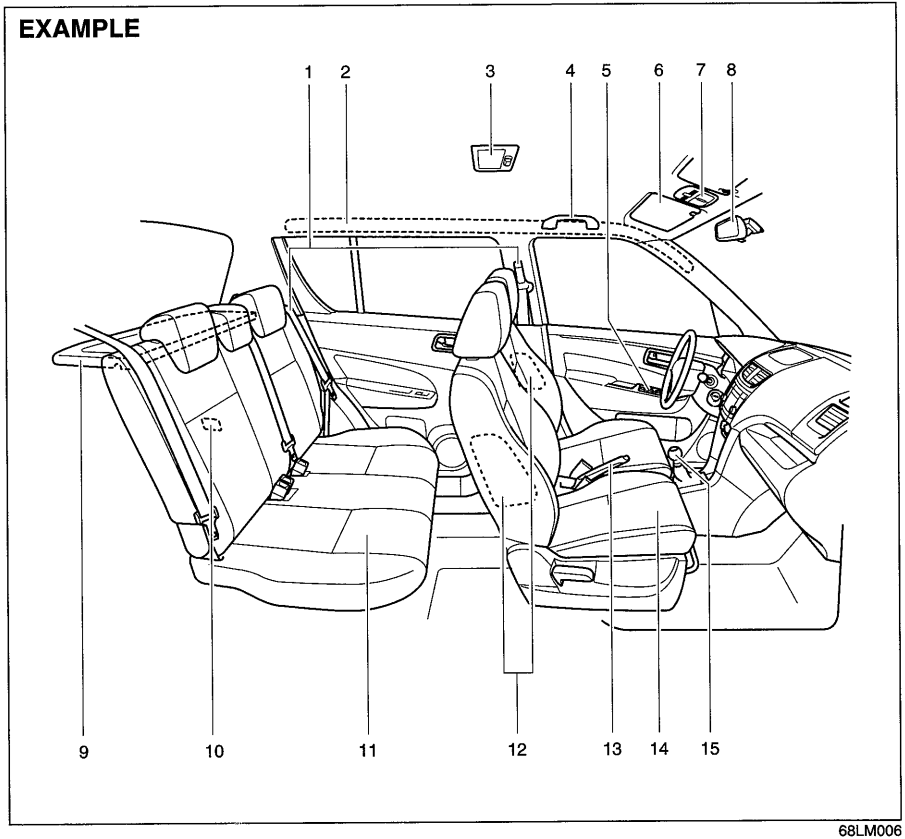

68LM006

INSTRUMENT PANEL

1. Front Air Bags (P.2-48)
2. Instrument Panel Upper Box (P.5-79)
3. Hazard Warning Switch (P.2-82)
4. Audio (if equipped) (P.5-17)
5. Remote Audio Controls (if equipped) (P.5-62)
6. Front Knee Air Bag (P.2-48)
7. Heating and Air Conditioning System (P.5-1)
8. Accessory Socket (P.5-75)
9. Heated Rear Window and Heated Outside Rearview Mirrors (if equipped) Switch (P.2-86)
10. Glove Box (P.5-79)
11. Front Seat Heater Switch (if equipped) (P.2-25)

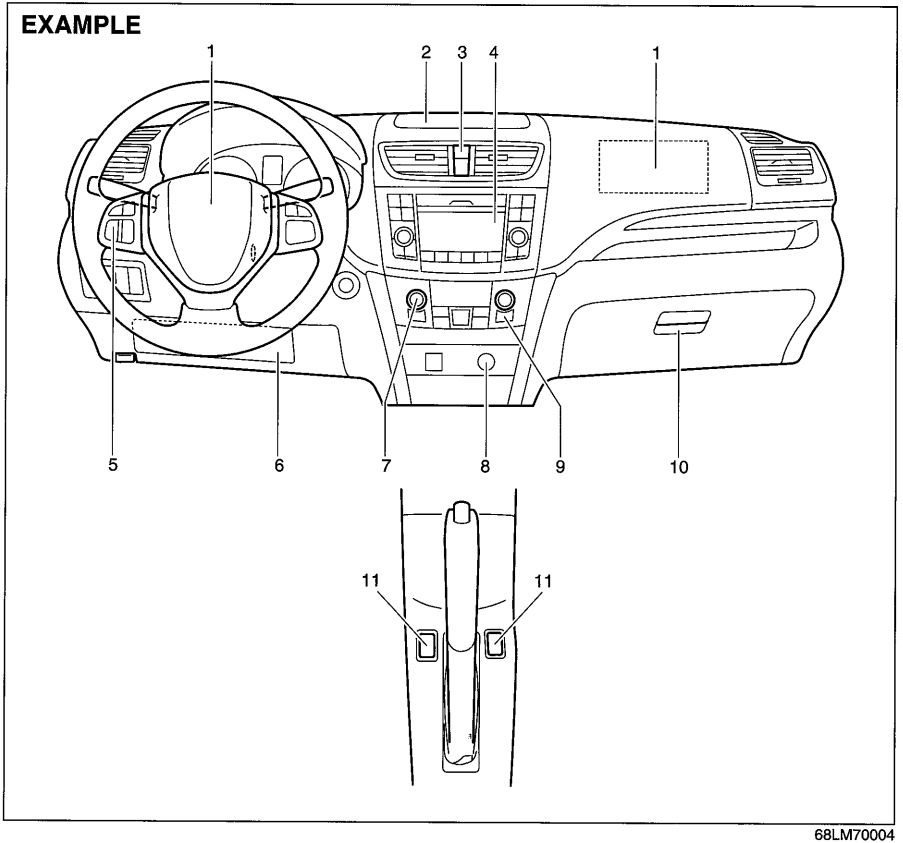

68LM70004

INSTRUMENT PANEL

1. Lighting Control Lever (P.2-75)/ Turn Signal Control Lever (P.2-81)
2. Instrument Cluster (P.2-56)
3. Windshield Wiper and Washer Lever (P.2-82)/Rear Window Wiper and Washer Switch (P.2-84)
4. Headlight Leveling Switch (if equipped) (P.2-80)/ Headlight Washer Switch (if equipped) (P.2-81)
5. Front Fog Light Switch (if equipped) (P.2-80)
6. Fuse Box (P.7-33)
7. Engine Hood Release Handle (P.5-72)
8. "ENG A-STOP OFF" Switch (if equipped) (P.3-25)
9. ESP® OFF switch (P.3-32)
10. Hands-free Switches (if equipped) (P.5-44, 5-56)
11. Ignition Switch (Vehicle without Keyless Push Start System) (P.3-3)
12. Engine Switch (Vehicle with Keyless Push Start System) (P.3-5)

EXAMPLE

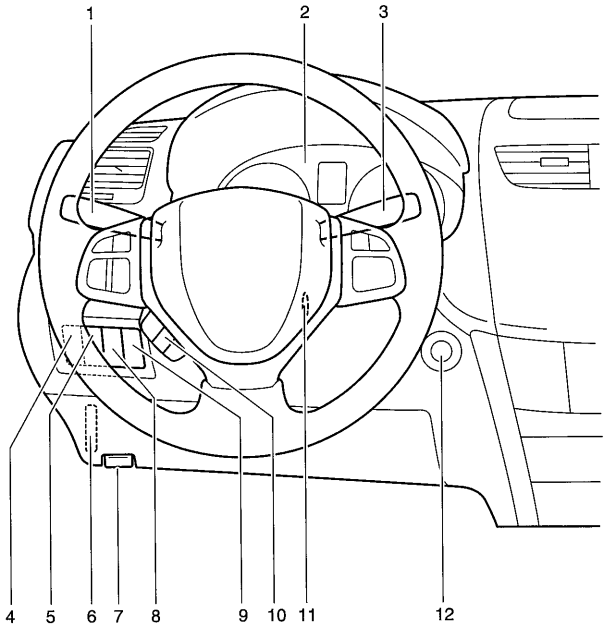

68LM70003

TIRE CHANGING TOOL

1. Jack Handle (P.8-1)
2. Wheel Brace (P.8-1)
3. Towing Hook (P.5-85)
4. Spare Tire (if equipped) (P.7-31, 8-1)
5. Jack (P.8-1)
6. Flat Tire Repair Kit (if equipped) (P.8-6)

Models without flat tire repair kit

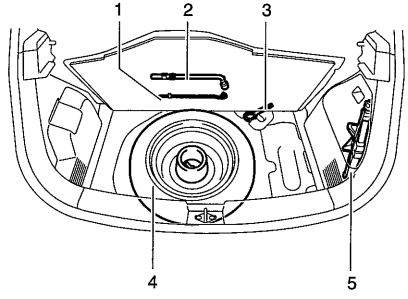

Models with flat tire repair kit

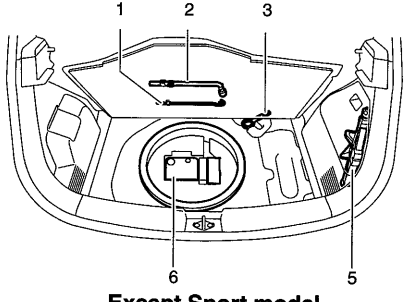

Except Sport model

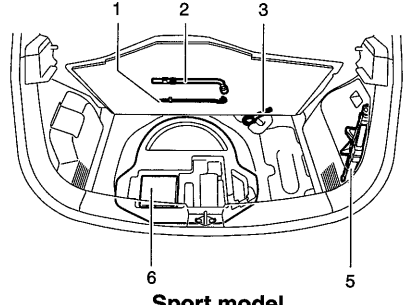

Sport model

EXAMPLE

68LM20005

FUEL RECOMMENDATION

Fuel Recommendation **1-1**

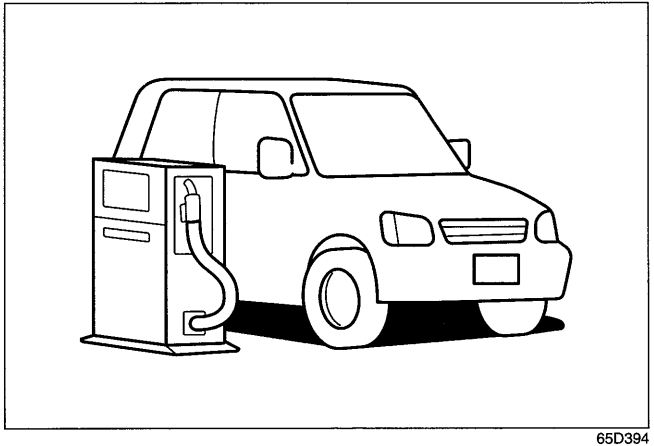

65D394

Fuel Recommendation

Gasoline Engine

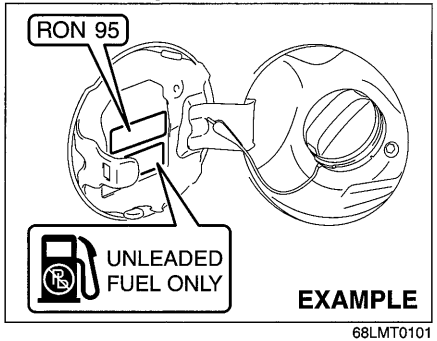

68LMT0101

If your vehicle is not fitted with a restrictor in the fuel filler pipe then you may use leaded or unleaded gasoline with an octane number (RON) of 85 or higher. Note, it is preferable to use unleaded gasoline.

If your vehicle is fitted with a restrictor in the fuel filler pipe then you **must** use unleaded gasoline with an octane number (RON) of 91 or higher (or RON of 95 or higher if it is stated on the fuel filler lid). These vehicles are also identified by a label attached near the fuel filler pipe that states: "UNLEADED FUEL ONLY", "NUR UNVERBLEITES BENZIN", "ENDAST BLYFRI BENSIN" or "SOLO GASOLINA SIN PLOMO".

If the "RON **95**" label is attached, you must use unleaded gasoline with an octane number (RON) of **95** or higher.

Gasoline/Ethanol blends
Blends of unleaded gasoline and ethanol (grain alcohol), also known as gasohol, are commercially available in some areas. Blends of this type may be used in your vehicle if they are no more than 10% ethanol. Make sure this gasoline-ethanol blend has octane ratings no lower than those recommended for gasoline.

Gasoline/Methanol blends
Blends of unleaded gasoline and methanol (wood alcohol) are also commercially available in some areas. DO NOT USE fuels containing more than 5% methanol under any circumstances. Fuel system damage or vehicle performance problems resulting from the use of such fuels are not the responsibility of SUZUKI and may not be covered under the New Vehicle Warranty. Fuels containing 5% or less methanol may be suitable for use in your vehicle if they contain cosolvents and corrosion inhibitors.

NOTE:
If you are not satisfied with the driveability or fuel economy of your vehicle when you are using a gasoline/alcohol blend, you should switch back to unleaded gasoline containing no alcohol.

NOTICE

The fuel tank has an air space to allow for fuel expansion in hot weather. If you continue to add fuel after the filler nozzle has automatically shut off or an initial blowback occurs, the air chamber will become full. Exposure to heat when fully fuelled in this manner will result in leakage due to fuel expansion. To prevent such fuel leakage, stop filling after the filler nozzle has automatically shut off, or when using an alternative non-automatic system, initial vent blowback occurs.

NOTICE

Be careful not to spill fuel containing alcohol while refueling. If fuel is spilled on the vehicle body, wipe it up immediately. Fuels containing alcohol can cause paint damage, which is not covered under the New Vehicle Limited Warranty.

Diesel Engine

The diesel fuel should be with Cetane Index higher than 51 and sulfur content less than 10 ppm (parts per million) and up to 7 % of Biodiesel (B7) as FAME (Fatty Acid Methyl Ester). You should use the diesel fuel conformable to EN590:2010 that corresponded to Euro V emission control. Do not use marine diesel fuel, heating oils and so on forth. If you use improper diesel fuel, it may cause serious engine damage.

NOTICE

The fuel tank has an air space to allow for fuel expansion in hot weather. If you continue to add fuel after the filler nozzle has automatically shut off or an initial blowback occurs, the air chamber will become full. Exposure to heat when fully fuelled in this manner will result in leakage due to fuel expansion. To prevent such fuel leakage, stop filling after the filler nozzle has automatically shut off, or when using an alternative non-automatic system, initial vent blowback occurs.

NOTICE

Be careful not to spill fuel containing alcohol while refueling. If fuel is spilled on the vehicle body, wipe it up immediately. Fuels containing alcohol can cause paint damage, which is not covered under the New Vehicle Limited Warranty.

MEMO

BEFORE DRIVING

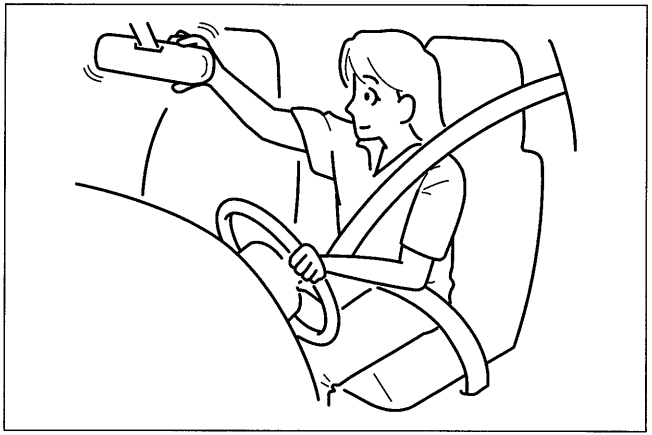

60G404

Keys 2-1
Door Locks 2-2
Keyless Push Start System Remote Controller/Keyless Entry System Transmitter (if equipped) 2-7
Theft Deterrent Light 2-16
Windows 2-17
Mirrors 2-20
Front Seats 2-22
Front Seat Heater (if equipped) 2-25
Rear Seats 2-26
Seat Belts and Child Restraint Systems 2-29
Child Restraint System for EU Countries 2-38
Supplemental Restraint System (air bags) 2-47
Instrument Cluster 2-56
Warning and Indicator Lights 2-57
Speedometer 2-67
Tachometer (if equipped) 2-67
Fuel Gauge 2-68
Temperature Gauge 2-68
Brightness Control 2-69
Information Display 2-69
Lighting Control Lever 2-75
Front Fog Light Switch (if equipped) 2-80
Headlight Leveling Switch (if equipped) 2-80
Headlight Washer Switch (if equipped) 2-81
Turn Signal Control Lever 2-81
Hazard Warning Switch 2-82
Windshield Wiper and Washer Lever 2-82
Tilt/Telescoping (if equipped) Steering Lock Lever 2-85
Horn 2-85
Heated Rear Window and Heated Outside Rearview Mirrors (if equipped) Switch 2-86

Keys

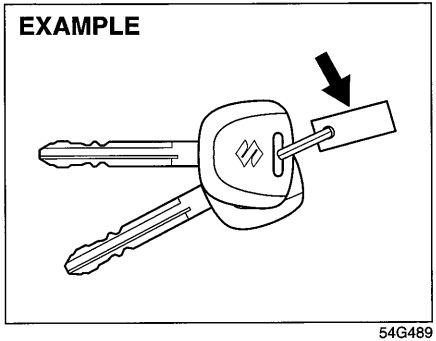

54G489

Your vehicle comes with a pair of identical keys. Keep the spare key in a safe place. One key can open all of the locks on the vehicle.

The key identification number is stamped on a metal tag provided with the keys or on the keys. Keep the tag (if equipped) in a safe place. If you lose your keys, you will need this number to have new keys made. Write the number below for your future reference.

KEY NUMBER:

Immobilizer System

This system is designed to help prevent vehicle theft by electronically disabling the engine starting system.
The engine can be started only with your vehicle's original immobilizer ignition key which has an electronic identification code programmed into it. The key communicates the identification code to the vehicle when the ignition switch is turned to the "ON" position or the engine switch is pressed to change the ignition mode to "ON". If you need to make spare keys, see your SUZUKI dealer. The vehicle must be programmed with the correct identification code for the spare keys. A key made by an ordinary locksmith will not work.

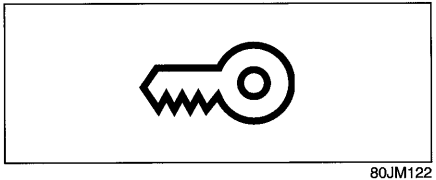

80JM122

If the immobilizer/keyless push start system warning light blinks when the ignition switch is in the "ON" position or the ignition mode is "ON", the engine will not start.

NOTE:
If this light blinks, perform the following operations:
(For vehicles without keyless push start system)
Turn the ignition switch to the "LOCK" position, then turn it back to the "ON" position.
(For vehicles with keyless push start system)
Change the ignition mode to "LOCK" (OFF), then change back to "ON".
If the light still blinks with the ignition switch turned to the "ON" position or the ignition mode changed to "ON", there may be something wrong with your key or with the immobilizer system. Ask your SUZUKI dealer to inspect the system.
NOTE:

- *If you lose your immobilizer ignition key, see your SUZUKI dealer as soon as possible to have the lost one deactivated, then have the new key made by them.*
- *If you own other vehicles with immobilizer keys, keep those keys away from the ignition switch or the engine switch when using your SUZUKI, or the engine may not be started because they may interfere with your SUZUKI's immobilizer system.*
- *If you attach any metal objects to the immobilizer key, it may not start the engine.*

NOTICE

The immobilizer key is a sensitive electronic instrument. To avoid damaging the immobilizer key:
- **Do not expose it to impacts, moisture or high temperature such as on the dashboard under direct sunlight.**
- **Keep the immobilizer key away from magnetic objects.**

This immobilizer system, model I68L0 for keyless entry model and TWK1A001 for keyless engine start model are in compliance with the essential requirements and other provisions of the Directive 1999/5/EC.

Ignition Key Reminder (if equipped)

A buzzer sounds intermittently to remind you to remove the ignition key if it is in the ignition switch when the driver's door is opened.

Door Locks

Side Door Locks

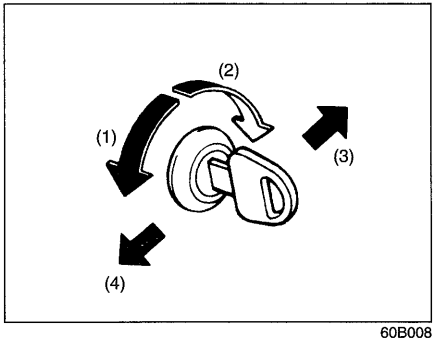

60B008

(1) UNLOCK
(2) LOCK
(3) Rear
(4) Front

To lock a front door from outside the vehicle:

- Insert the key and turn the top of the key toward the rear of the vehicle, or
- Turn the lock knob forward, then pull and hold the door handle as you close the door.

To unlock a front door from outside the vehicle, insert the key and turn the top of the key toward the front of the vehicle.

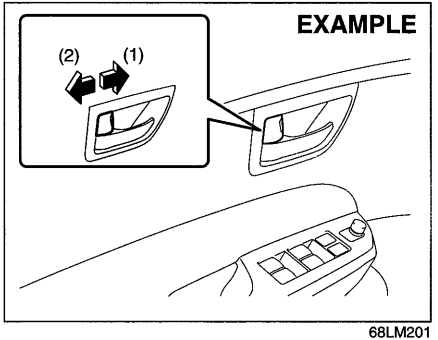

68LM201

(1) LOCK
(2) UNLOCK

To lock a door from inside the vehicle, turn the lock knob forward. Turn the lock knob rearward to unlock the door.

To lock a rear door from outside the vehicle, turn the lock knob forward and close the door. You do not need to pull and hold the door handle as you close the door.

NOTE:
Be sure to hold the door handle when you close a locked front door, or the door will not remain locked.

Central Door Locking System (if equipped)

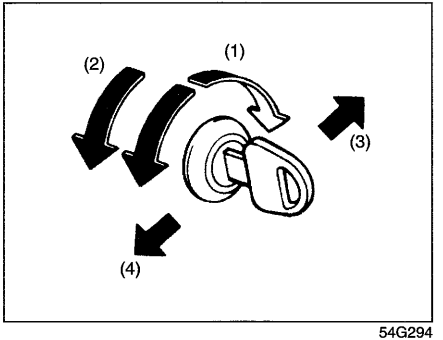

54G294

(1) LOCK
(2) UNLOCK
(3) Rear
(4) Front

You can lock and unlock all doors (including the tailgate) simultaneously by using the key in the driver's door lock.

To lock all doors simultaneously, insert the key in the driver's door lock and turn the top of the key toward the rear of the vehicle once.

To unlock all doors simultaneously, insert the key in the driver's door lock and turn the top of the key toward the front of the vehicle twice.

To unlock the driver's door only, insert the key in that door lock and turn the top of the key toward the front of the vehicle once.

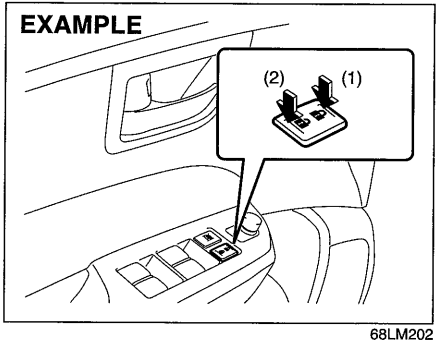

68LM202

(1) LOCK
(2) UNLOCK

You can also lock or unlock all doors by depressing the front or rear of the switch, respectively.

NOTE:
- *If your vehicle is equipped with the keyless entry system, you can also lock or unlock all doors by operating the transmitter. Refer to "Keyless Push Start System Remote Controller/Keyless Entry System Transmitter" in this section.*
- *If your vehicle is equipped with the keyless push start system, you can also lock or unlock all doors by pushing the request switch on the door handle. Refer to "Keyless Push Start System Remote Controller/Keyless Entry System Transmitter" in this section.*

Dead Lock System (if equipped)

This system is designed to help prevent tamper-unlocking of the door locks.

You can activate this system by turning the key in the driver's door lock.

NOTE:
- *If your vehicle is equipped with the keyless entry system, you can activate the dead lock system by operating the transmitter. Refer to "Keyless Push Start System Remote Controller/Keyless Entry System Transmitter" in this section.*
- *If your vehicle is equipped with the keyless push start system, you can activate the dead lock system by pushing the request switch on the door handle. Refer to "Keyless Push Start System Remote Controller/Keyless Entry System Transmitter" in this section.*

⚠ WARNING

Do not activate the dead lock system if there are occupants in the vehicle. They will be locked in the vehicle and cannot unlock the doors from inside.

NOTE:
- *The dead lock system will not operate if one or more door(s) is(are) not closed and latched completely. Make sure all doors (including the tailgate) are completely closed and latched when activating the dead lock system.*

- *The dead lock system is released automatically allowing all the side doors to be unlocked when the ignition switch is turned to the "ON" position or the engine switch is pressed to change the ignition mode to "ON".*

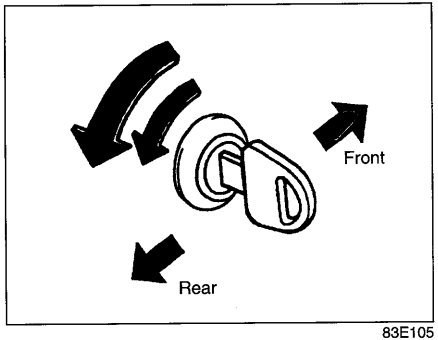

83E105

To activate this system:
Insert the key in the driver's door lock and turn the top of the key toward the rear of the vehicle twice within 3 seconds.

You cannot use the lock knobs to unlock the side doors when this system is activated.

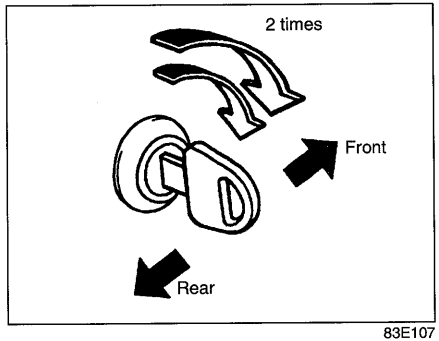

83E107

To release this system:
To unlock all the side doors, insert the key in the driver's door lock and turn the top of the key toward the front of the vehicle twice.

To unlock only the driver's door, insert the key in that door lock and turn the top of the key toward the front of the vehicle once.

Child-Proof Locks (rear door)

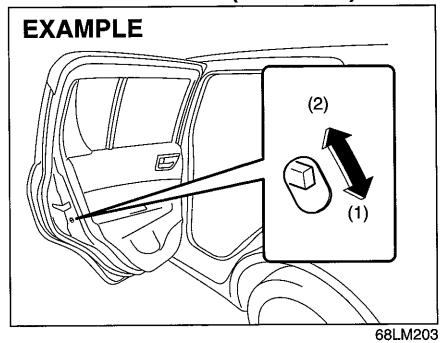

68LM203

(1) LOCK
(2) UNLOCK

Each of the rear doors is equipped with a child-proof lock which can be used to help prevent unwanted opening of the door from inside the vehicle. When the lock lever is in the "LOCK" position (1), the rear door can only be opened from outside. When the lock lever is in the "UNLOCK" position (2), the rear door can be opened from inside or outside.

⚠ WARNING

Be sure to place the child-proof lock in the "LOCK" position whenever children are seated in the rear.

Tailgate

Type1

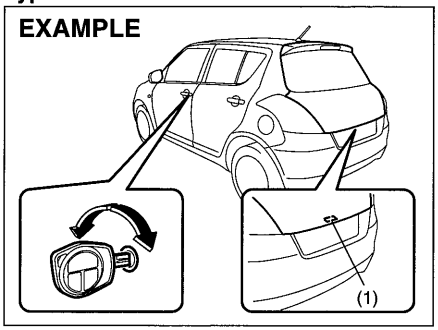

68LM204

(1) Tailgate unlatch switch

You can lock and unlock the tailgate by using the key in the driver's door lock.

To open the tailgate, push and hold the tailgate unlatch switch (1) and lift the tailgate.

NOTE:
When the tailgate is closed incompletely, follow the procedure below:
1) Push the tailgate unlatch switch (1) and open the tailgate.
2) After a few seconds, close the tailgate.
3) Make sure that the tailgate is closed completely.

Type2

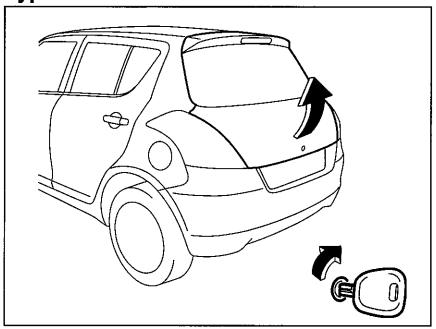

68LM245

To open the tailgate, insert the key and turn it clockwise to unlatch and lift the tailgate.

⚠ WARNING

Always make sure that the tailgate is closed and latched securely. Completely closing the tailgate helps prevent occupants from being thrown from the vehicle in the event of an accident. Completely closing it also helps keep exhaust gases from entering the vehicle.

If you cannot unlatch the tailgate by pushing the unlatch switch (1) due to a discharged battery or malfunction, follow the procedures below to unlatch the tailgate from inside the vehicle.

1) Fold the rear seat forward for easier access. Refer to "Folding Rear Seats" section for details on how to fold the rear seat forward.

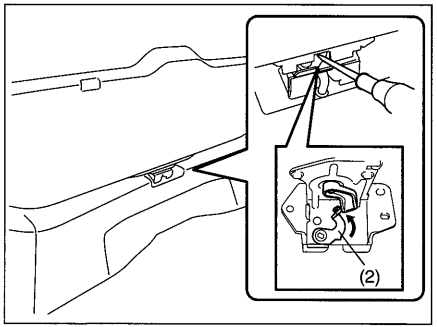

68LM246

2) Push open the tailgate from inside by pushing up on the emergency lever (2) using a flat blade screwdriver or the jack handle. The tailgate will be latched again by closing the tailgate simply.

If the tailgate cannot be unlatched by pushing the unlatch switch (1), have the vehicle inspected by your SUZUKI dealer.

⚠ CAUTION

- **To avoid injury, do not use your finger to push the emergency lever.**
- **Make sure there is no one near the tailgate when pushing open the tailgate from inside the vehicle.**

Keyless Push Start System Remote Controller/Keyless Entry System Transmitter (if equipped)

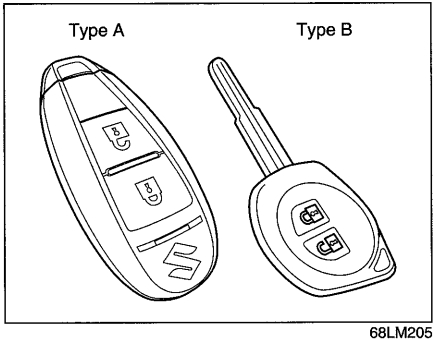

68LM205

Your vehicle is equipped with either a keyless push start system remote controller (Type A) or a keyless entry system transmitter (Type B). The remote controller has a keyless entry system and a keyless push start system. The transmitter has only a keyless entry system. For details, refer to the following explanations.

⚠ WARNING

Radio waves from the keyless push start system antenna(s) may interfere with operation of electrical medical equipment such as pacemakers. Failure to take the precautions listed below can increase the risk of severe injury or death due to radio wave interference.

- **Anyone who uses electrical medical equipment such as a pacemaker should consult the medical equipment supplier or their medical advisor about whether radio waves from the antenna(s) can interfere with the medical equipment.**
- **If radio wave interference is a concern, have the function of the antenna(s) disabled by your SUZUKI dealer.**

Keyless Push Start System Remote Controller (Type A)

The remote controller enables the following operations:

- You can lock or unlock the doors by operating the LOCK/UNLOCK buttons on the remote controller. Refer to the explanation in this section.
- You can lock or unlock the doors by pushing the request switch on the door handle. For details, refer to the explanation in this section.
- You can start the engine without using an ignition key. For details, refer to "Engine Switch" in the "OPERATING YOUR VEHICLE" section.

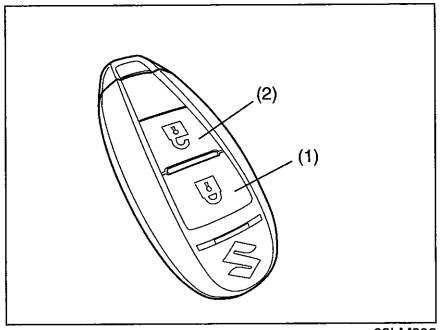

68LM206

(1) "LOCK" button
(2) "UNLOCK" button

There are two ways to lock or unlock all doors (including the tailgate) simultaneously by operating the remote controller near the vehicle.

Central door locking system

- To lock all doors, push the "LOCK" button (1) once.
- To unlock only the driver's door, push the "UNLOCK" button (2) once.
- To unlock other doors, push the "UNLOCK" button (2) once again.

The turn signal lights will flash once and the exterior buzzer will sound once when the doors are locked.

Central door locking system with the dead lock system (if equipped)

If you want to prevent tamper-unlocking of the door locks, use this method. When the dead lock system is activated, operating the lock knobs will not unlock the side doors.

To activate this system:
To lock all doors, push the "LOCK" button (1) twice within 3 seconds.

To release this system:

- To unlock only the driver's door, push the "UNLOCK" button (2) once.
- To unlock other doors, push the "UNLOCK" button (2) once again.

⚠ WARNING

Do not activate the dead lock system if there are occupants in the vehicle. They will be locked in the vehicle and cannot unlock the doors from inside.

The turn signal lights will flash once and the exterior buzzer will sound once when the doors are locked, and then the turn signal lights will flash once and the exterior buzzer will sound once again when the doors are locked with the dead lock system.

With the remote controller inside the vehicle, if you push the "LOCK" button on the remote controller, the exterior buzzer will sound and doors cannot be locked.

When the doors are unlocked:

- The turn signal lights will flash twice and the exterior buzzer will sound twice.
- If the interior light switch is in the "DOOR" position, the interior light will turn on for about 15 seconds and then fade out. If you press the engine switch during this time, the light will start to fade out immediately.

Be sure the doors are locked after you operate the "LOCK" button (1).
If no door is opened within about 30 seconds after the "UNLOCK" button (2) is operated, the doors will automatically lock again.

NOTE:

- *The maximum operating distance of the remote controller is about 5 m (16 ft.), but this can vary depending on the surroundings, especially near other transmitting devices such as radio towers or CB (Citizen's Band) radios.*
- *The door locks cannot be operated with the remote controller if the ignition mode is other than the "LOCK" (OFF).*
- *When any door is open, if you push the "LOCK" button on the remote controller, the exterior buzzer will sound and doors cannot be locked.*
- *If you lose one of the remote controllers, ask your SUZUKI dealer as soon as possible for a replacement. Be sure to have your dealer program the new remote controller code in your vehicle's memory so that the old code is erased.*

Keyless unlocking/locking using the request switches

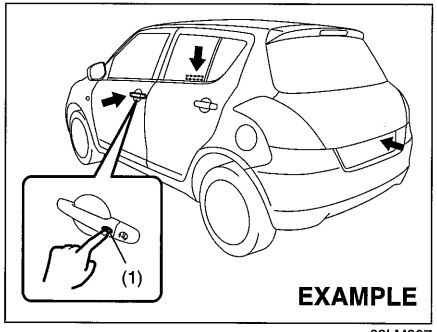

68LM207

When the remote controller is within the operating range described in this section, you can lock or unlock the doors (including the tailgate) by pushing the request switch (1) on the door handle of the driver's door, front passenger's door or tailgate. If you want to prevent tamper-unlocking of the door locks, you can activate the dead lock system.

To lock or dead lock all doors when all doors are unlocked:

- To lock all doors, push the request switch on one of the door handles once.
- To lock all doors with the dead lock system, push the request switch on one of the door handles twice within about 3 seconds.

The turn signal lights will flash once and the exterior buzzer will sound once when the doors are locked, and then the turn signal lights will flash once and the exterior buzzer will sound once again when the doors are locked with the dead lock system.

⚠ WARNING

Do not activate the dead lock system if there are occupants in the vehicle. They will be locked in the vehicle and cannot unlock the doors from inside.

To unlock a door or all doors:

- Push the request switch on the door handle once to unlock only one door.
- Push the request switch on the door handle twice to unlock all doors.

When the doors are unlocked:

- The turn signal lights will flash twice and the exterior buzzer will sound twice.
- If the interior light switch is in the "DOOR" position, the interior light will turn on for about 15 seconds and then fade out. If you press the engine switch during this time, the light will start to fade out immediately.

Be sure the doors are locked after you operate the request switch to lock the doors.

NOTE:

- *The door locks cannot be operated by the request switch under the following conditions:*
  - *If any door is open or is not completely closed.*
  - *If the ignition mode is other than "LOCK" (OFF).*
- *If no doors are opened within about 30 seconds after unlocking the doors by pushing the request switch, the doors will be locked again automatically.*

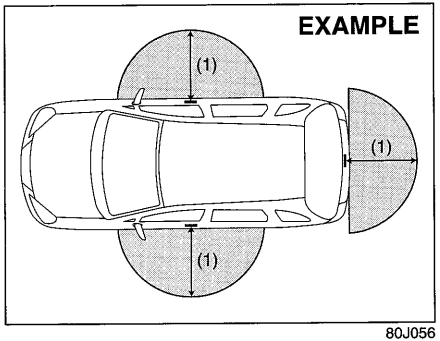

80J056

(1) 80 cm (2 1/2 feet)

When the remote controller is within approximately 80 cm (2 1/2 feet) from a front door handle or the tailgate switch, you can lock or unlock the doors by pushing the request switch.

NOTE:
- *If the remote controller is outside the request switch operating range described above, you will not be able to operate the request switch.*
- *If the battery of the remote controller runs down or there are strong radio waves or noise, the request switch operating range may be reduced or the remote controller may be inoperative.*
- *If the remote controller is too close to the door glass, the request switches may not operate.*
- *If a spare remote controller is in the vehicle, the request switches may not operate normally.*
- *The remote controller will only operate a request switch if it is within the switch's operating range. For example, if the remote controller is within the operating range of the driver's door request switch but not the front passenger's door request switch or the tailgate request switch, the driver's door switch can be operated but the front passenger's door switch or tailgate switch cannot be operated.*

NOTICE

The remote controller is a sensitive electronic instrument. To avoid damaging the remote controller:
- **Do not expose it to impacts, moisture or high temperature such as by leaving it on the dashboard under direct sunlight.**
- **Keep the remote controller away from magnetic objects such as a television.**

NOTE:
The keyless push start system may not function correctly in certain environments or under certain operating conditions such as the following:
- *When there are strong signals coming from a television, power station or a cellular phone.*
- *When the remote controller is in contact with or covered by a metal object.*
- *When a radio wave type remote keyless entry is used nearby.*
- *When the remote controller is placed near an electronic device such as personal computer.*

Some additional precautions you should take and information you should be aware of are:
- *Make sure the key is stowed in the remote controller. If the remote controller becomes unreliable, you will not be able to lock or unlock the doors.*
- *Be sure that the driver always carries the remote controller.*
- *If you lose one of the remote controllers, ask your SUZUKI dealer as soon as possible for a replacement. Be sure to have your dealer program the new remote controller code in your vehicle's memory so that the old code is erased.*
- *You can use up to four remote controllers and the keys for your vehicle. Ask your SUZUKI dealer for details.*
- *The battery life of the remote controller is about two years, but it can vary depending on usage conditions.*

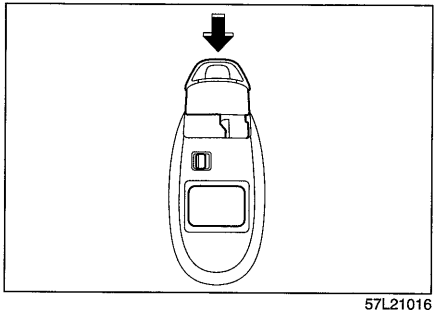

57L21016

To stow the key into the remote controller, push the key in the remote controller until you hear a click.

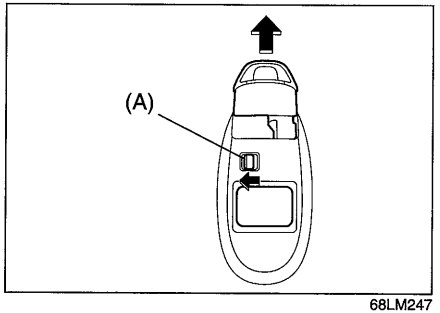

68LM247

To remove the key from the remote controller, push the button (A) in the direction of the arrow and pull the key out from the remote controller.

Request Switch Warning Buzzer

This exterior buzzer beeps for about 2 seconds in the following conditions to warn you that the request switch is not working:

- The request switch is pressed after all doors are closed with the ignition mode changed to "ACC" or "ON" by pressing the engine switch.
- The request switch is pressed in any of the following conditions after changing the ignition mode to "LOCK" (OFF) by pressing the engine switch.
  - The remote controller is left inside the vehicle.
  - Any of the doors is open.

Press the request switch again after doing the following:
With the ignition mode changed to "LOCK" (OFF) by pressing the engine switch, bring out the remote controller if it is inside the vehicle and check that all doors are completely closed.

Reminder function

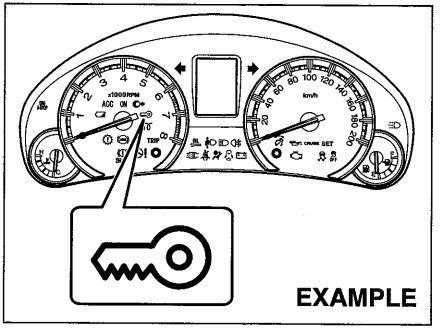

68LM208

If the remote controller is not in the vehicle under the following conditions, the buzzer sounds intermittently for about 2 seconds and the immobilizer/keyless push start system warning light on the instrument cluster blinks:
When one or more doors are opened and all of the doors are later closed with the ignition mode is other than "LOCK".

The indicator light will turn off within several seconds after the remote controller is returned to an area of the vehicle other than the rear luggage area.

If the remote controller is left in the vehicle and you lock the driver's door or front passenger's door as described below, the door will be automatically unlocked.

- If you open the driver's door and lock the door by turning the lock knob forward or pushing the power door locking switch, the driver's door will be automatically unlocked.
- If you open the front passenger's door and lock the door by turning the lock knob forward or pushing the power door locking switch, the front passenger's door will be automatically unlocked.

NOTE:

- *The reminder will not operate when the remote controller is on the instrument panel, in the glove box, in a storage compartment, in the sun visor or on the floor etc.*
- *Be sure that the driver always carries the remote controller.*
- *Do not leave the remote controller in the vehicle when leaving the vehicle.*

Replacement of the battery

If the remote controller becomes unreliable, replace the battery.

To replace the battery of the remote controller:

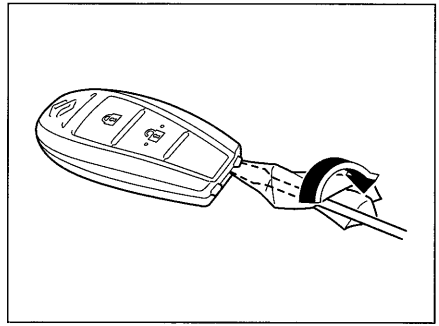

71LMT0201

1) Pull the key out from the remote controller.
2) Insert a flat blade screwdriver covered with a soft cloth in the slot of the remote controller and pry it open.

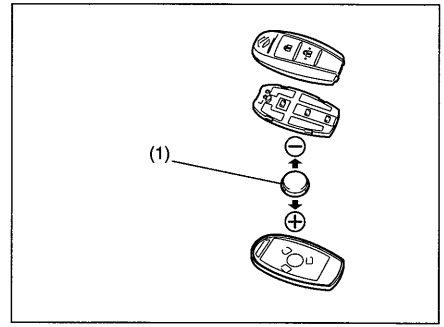

68LM210

(1) Lithium disc type battery: CR2032 or equivalent

3) Replace the battery (1) so its + terminal faces the bottom of the case as shown in the illustration.
4) Close the remote controller firmly.
5) Make sure the door locks can be operated with the remote controller.
6) Dispose of the used battery properly according to applicable rules or regulations. Do not dispose of lithium batteries with ordinary household trash.

⚠ WARNING

Swallowing a lithium battery may cause serious internal injury. Do not allow anyone to swallow a lithium battery. Keep lithium batteries away from children and pets. If swallowed, contact a physician immediately.

NOTICE

The remote controller is a sensitive electronic instrument. To avoid damaging it, do not expose it to dust or moisture or tamper with internal parts.

NOTE:
Used batteries must be disposed properly according to applicable rules or regulations and must not be disposed with ordinary household trash.

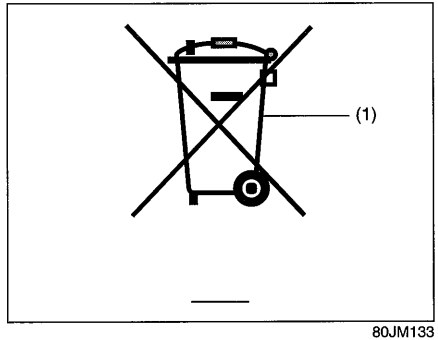

80JM133

(1) Crossed-out wheeled bin symbol

The crossed-out wheeled bin symbol (1) indicates that used battery should be collected separately from ordinary household trash.

By ensuring the used battery is disposed or recycled correctly, you will help prevent potential negative consequences for the environment and human health, which could otherwise be caused by inappropriate trash handling of the battery. The recycling of materials will help to conserve natural resources. For more detailed information about disposing or recycling of the used battery, consult your SUZUKI dealer.

Type A
The keyless push start system, controller model S57L0, receiver model R57L1 and key model TS008 are in compliance with the essential requirements and other provisions of Directive 1999/5/EC.

Keyless Entry System Transmitter (Type B)

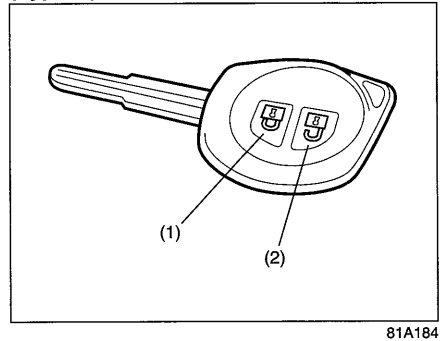

81A184

(1) "LOCK" button
(2) "UNLOCK" button

There are two ways to lock or unlock all doors (including the tailgate) simultaneously by operating the transmitter near the vehicle.

Central door locking system

- To lock all doors, push the "LOCK" button (1) once.
- To unlock only the driver's door, push the "UNLOCK" button (2) once.
- To unlock other doors, push the "UNLOCK" button (2) once again.

Central door locking system with the dead lock system (if equipped)

If you want to prevent tamper-unlocking of the door locks, use this method. When the dead lock system is activated, operating the lock knobs will not unlock the side doors.

To activate this system:
To lock all doors, push the "LOCK" button (1) twice within 3 seconds.

To release this system:

- To unlock only the driver's door, push the "UNLOCK" button (2) once.
- To unlock other doors, push the "UNLOCK" button (2) once again.

⚠ WARNING

Do not activate the dead lock system if there are occupants in the vehicle. They will be locked in the vehicle and cannot unlock the doors from inside.

The turn signal lights will flash once when the doors are locked and then the turn signal lights will flash once again when the doors are locked with the dead lock system.

When the doors are unlocked:

- The turn signal lights will flash twice.
- If the interior light switch is in the "DOOR" position, the interior light will turn on for about 15 seconds and then fade out. If you insert the key into the ignition switch during this time, the light will start to fade out immediately.

Be sure the doors are locked after you operate the "LOCK" button (1).

NOTE:
If no door is opened within about 30 seconds after the "UNLOCK" button (2) is operated, the doors will automatically lock again.

NOTE:

- *The maximum operating distance of the keyless entry system transmitter is about 5 m (16 ft.), but this can vary depending on the surroundings, especially near other transmitting devices such as radio towers or CB (Citizen's Band) radios.*
- *The door locks cannot be operated with the transmitter, if the ignition key is inserted in the ignition switch.*
- *When any door is open, the door locks can be operated only unlock with the transmitter, and the turn signal light will not flash.*
- *If you lose one of the transmitters, ask your SUZUKI dealer as soon as possible for a replacement. Be sure to have your dealer program the new transmitter code in your vehicle's memory so that the old code is erased.*

NOTICE

The transmitter is a sensitive electronic instrument. To avoid damaging the transmitter:

- **Do not expose it to impacts, moisture or high temperature such as by leaving it on the dashboard under direct sunlight.**
- **Keep the transmitter away from magnetic objects such as a television.**

Replacement of the Battery

If the transmitter becomes unreliable, replace the battery.

To replace the battery of the transmitter:

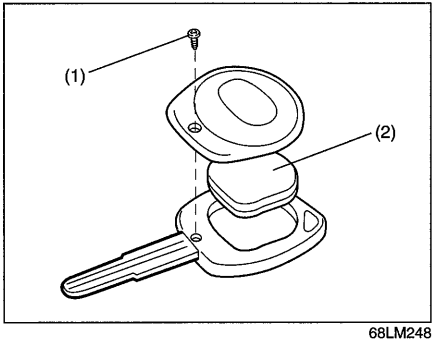

68LM248

1) Remove the screw (1), and open the transmitter cover.
2) Remove the transmitter (2).

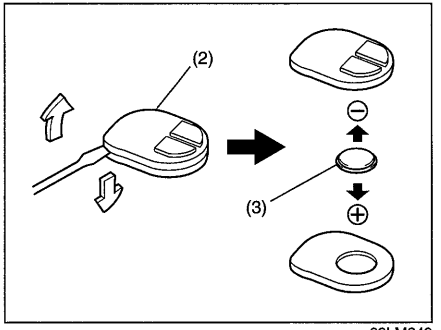

68LM249

(3) Lithium disc type battery: CR1616 or equivalent

3) Put the edge of a flat blade screwdriver in the slot of the transmitter (2) and pry it open.
4) Replace the battery (3) so its + terminal faces the "+" mark of the transmitter.
5) Close the transmitter and install it into the transmitter holder.
6) Close the transmitter cover, install and tighten the screw (1).
7) Make sure the door locks can be operated with the transmitter.
8) Dispose of the used battery properly according to applicable rules or regulations. Do not dispose of lithium batteries with ordinary household trash.

⚠ WARNING

Swallowing a lithium battery may cause serious internal injury. Do not allow anyone to swallow a lithium battery. Keep lithium batteries away from children and pets. If swallowed, contact a physician immediately.

NOTICE

The transmitter is a sensitive electronic instrument. To avoid damaging it, do not expose it to dust or moisture or tamper with internal parts.

NOTE:
Used batteries must be disposed properly according to applicable rules or regulations and must not be disposed with ordinary household trash.

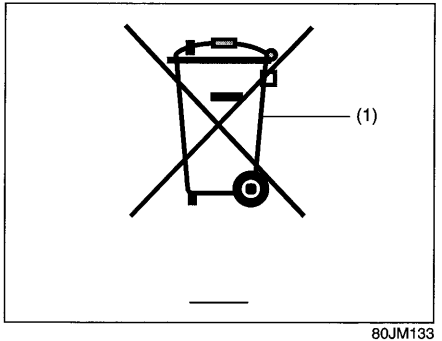

80JM133

(1) Crossed-out wheeled bin symbol

The crossed-out wheeled bin symbol (1) indicates that used battery should be collected separately from ordinary household trash.

By ensuring the used battery is disposed or recycled correctly, you will help prevent potential negative consequences for the environment and human health, which could otherwise be caused by inappropriate trash handling of the battery. The recycling of materials will help to conserve natural resources. For more detailed information about disposing or recycling of the used battery, consult your SUZUKI dealer.

Type B
The Keyless Entry System, Transmitter model T68L0 and Receiver model R68K0 are in compliance with the essential requirements and other provisions of Directive 1999/5/EC.

Theft Deterrent Light

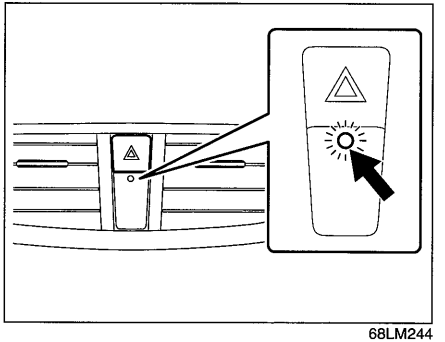

68LM244

This light will blink with the ignition switch in the "LOCK" or "ACC" position, or the ignition mode "LOCK" (OFF) or "ACC". The blinking light is intended to deter theft by leading others to believe that the vehicle is equipped with a security system.

Windows

Manual Window Control (if equipped)

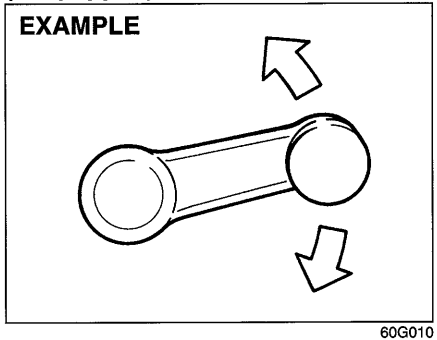

60G010

Raise or lower the door windows by turning the handle located on the door panel.

Electric Window Controls

The electric windows can only be operated when the ignition switch is in the "ON" position or the ignition mode is "ON".

Driver's side (type A)

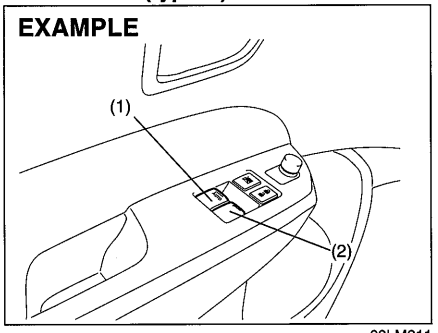

68LM211

Driver's side (type B)

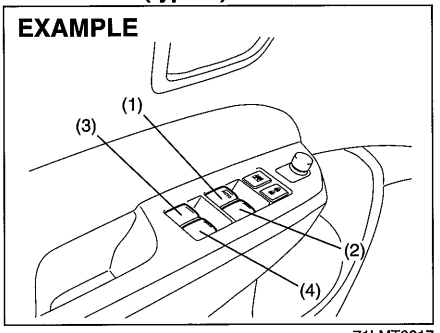

71LMT0217

The driver's door has a switch (1) to operate the driver's window, and a switch (2) to operate the front passenger's window or there are switches (3), (4), to operate the rear left and right passenger windows, respectively.

Passenger's door

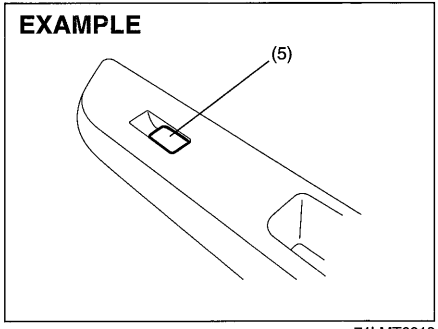

71LMT0218

The passenger's door has a switch (5) to operate the passenger's window.

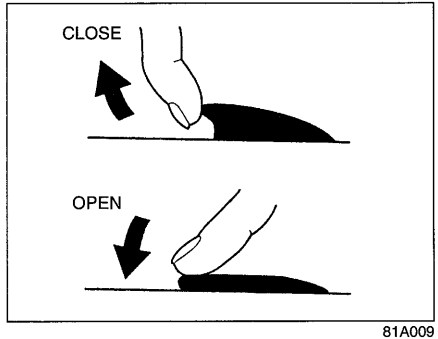

81A009

To open a window, push the top part of the switch and to close the window lift up the top part of the switch.

The driver's window has "auto-down" and "auto-up" features for added convenience (at toll booths or drive-through restaurants, for example). This means the driver can open or close the window without holding the window switch in the "Down" or "Up" position. Press down or lift up the driver's window switch completely and release it. To stop the window before it reaches the full-down or full-up position, pull up or push down the switch briefly.

Lock switch (type A)

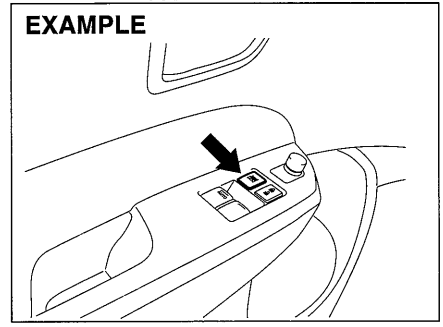

68LM213

Lock switch (type B)

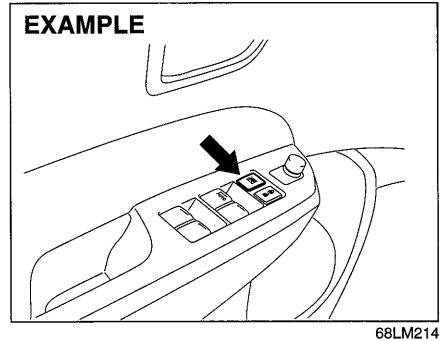

68LM214

The driver's door also has a lock switch for the passenger's window(s). When you push in the lock switch, the passenger's window(s) cannot be raised or lowered by operating any of the switches (2), (3), (4) or (5). To restore normal operation, release the lock switch by pushing again.

⚠ WARNING

- **You should always lock the passenger's window operation when there are children in the vehicle. Children can be seriously injured if they get part of their body caught by the window during operation.**
- **To avoid injuring an occupant by window entrapment, be sure no part of the occupant's body such as hands or head is in the path of the electric windows when closing them.**
- **Always remove the ignition key when leaving the vehicle even if only for a short time. Also do not leave children alone in a parked vehicle. Unattended children could use the electric window switches and get trapped by the window.**

NOTE:
If you drive with one of the rear windows open, you may hear a loud sound caused by air vibration. To reduce the sound, open the driver's or front passenger's window, or narrow the rear window opening.

Pinching Prevention Function
The driver's window is equipped with the pinching prevention function. The function detects a foreign object caught in the window while being closed by the "auto-up" feature, which you can close the window without holding the window switch in the "Up" position, and stops the window closing to prevent damage.

⚠ WARNING

To avoid injuring an occupant by window entrapment, be sure no part of the occupant's body such as hands or head is in the path of the electric window when closing it.
The function may not detect the object depending on size, hardness, and position of the object caught by the closing window.

⚠ CAUTION

- **The pinching prevention function does not act while you are holding the window switch in the "Up" position.**
- **The pinching prevention function may not detect an object caught in the window just before the window is fully closed.**

NOTE:
Even if you cannot close the window by the auto-up feature because there may be something wrong with the pinching prevention function, you can close the window by holding the window switch in the "Up" position.
If you drive in extreme off-road condition, the pinching prevention function may operate accidentally because the window react to vehicle jolting.

The Pinching Prevention Function Initialization

When you disconnect and reconnect the battery or replace the fuse, the function will be deactivated. In this condition, the auto-down feature will be deactivated, while the auto-up feature may remain being activated. The pinching prevention function needs to be initialized.

To initialize the pinching prevention function, use the following procedure:

1) Start the engine.
2) Open the driver's window fully by holding the window switch in the "Down" position.
3) Close the driver's window by holding the switch in the "Up" position, and keep holding the switch for 2 seconds after the window fully closed.
4) Check the driver's window if the auto-down/up feature work.

⚠ WARNING

Whenever you disconnect and reconnect the battery or replace the fuse, the pinching prevention function needs to be initialized.
The pinching prevention function will not be activated until the initialization complete.

If the auto-down/up feature would not work after initialization, there might be something wrong with the pinching prevention function. Have your vehicle inspected by an authorized SUZUKI dealer.

Mirrors

Inside Rearview Mirror

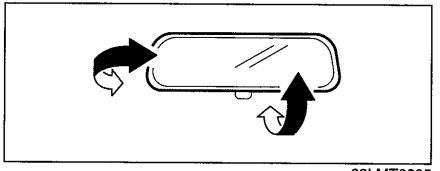

68LMT0205

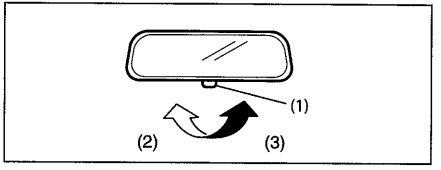

68LMT0206

(2) Day driving
(3) Night driving

You can adjust the inside rearview mirror by hand so as to see the rear of your vehicle in the mirror. To adjust the mirror, set the selector tab (1) to the day position, then move the mirror up, down or sideways by hand to obtain the best view.

When driving at night, you can move the selector tab to the night position to reduce glare from the headlights of vehicles behind you.

⚠ WARNING

- **Always adjust the mirror with the selector set to the day position.**
- **Only use the night position if it is necessary to reduce glare from the headlights of vehicles behind you. Be aware that in this position you may not be able to see some objects that could be seen in the day position.**

Outside Rearview Mirrors

Adjust the outside rearview mirrors so you can just see the side of your vehicle in the mirrors.

⚠ WARNING

Be careful when judging the size or distance of a vehicle or other object seen in the side convex mirror. Be aware that objects look smaller and appear farther away than when seen in a flat mirror.

Type 1

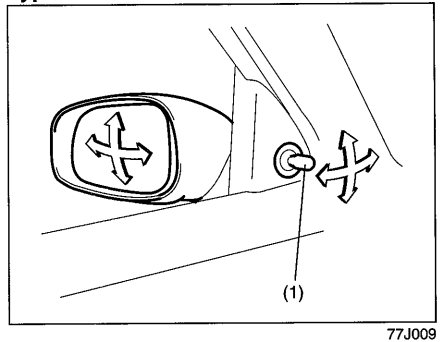

77J009

You can adjust the outside rearview mirrors by hand with the knob (1) located on the driver's or front passenger's door panel.

Type 2

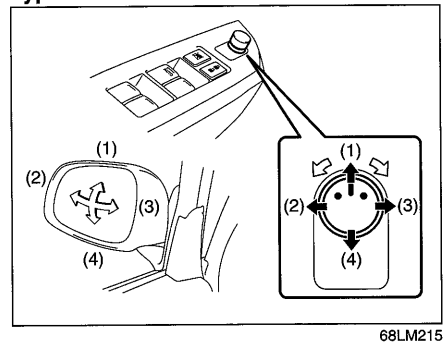

68LM215

The switch to control the electric mirrors is located on the driver's door panel. You can adjust the mirrors when the ignition switch is in the "ACC" or "ON" position, or the ignition mode is "ACC" or "ON". To adjust the mirrors:

1) Move the selector switch to the left or right to select the mirror you wish to adjust.
2) Press the outer part of the switch that corresponds to the direction in which you wish to move the mirror.
3) Return the selector switch to the center position to help prevent unintended adjustment.

NOTE:
If your vehicle is equipped with the heated outside rearview mirrors, refer to "Heated Rear Window and Heated Outside Rearview Mirrors (if equipped) Switch" in this section.

Outside Rearview Mirrors Folding Switch (if equipped)

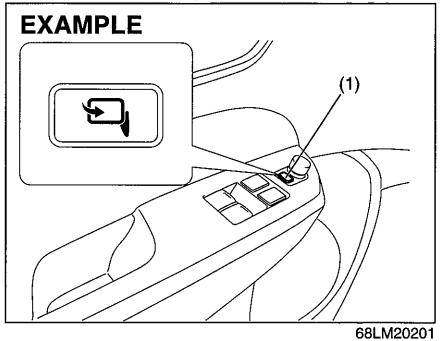

68LM20201

You can fold the mirrors when you park the vehicle in a narrow space. Push the folding switch (1) to fold and unfold the mirrors. Make sure the mirrors are completely unfolded before you start driving.

⚠ WARNING

Moving mirrors can pinch and injure a hand. Do not allow any one's hand to get near the mirrors when folding and unfolding the mirrors.

Front Seats

Seat Adjustment

⚠ WARNING

Never attempt to adjust the driver's seat or seatback while driving. The seat or seatback could move unexpectedly, causing loss of control. Make sure that the driver's seat and seatback are properly adjusted before you start driving.

⚠ WARNING

To avoid excessive seat belt slack, which reduces the effectiveness of the seat belts as a safety device, make sure that the seats are adjusted before the seat belts are fastened.

Adjusting Seat Position

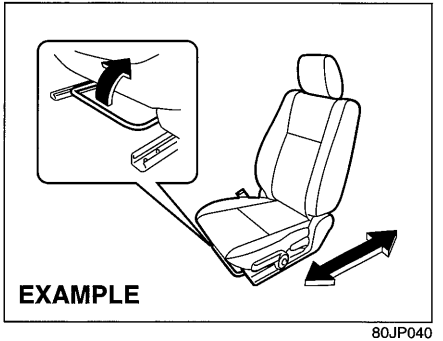

80JP040

The adjustment lever for each front seat is located under the front of the seat. To adjust the seat position, pull up on the adjustment lever and slide the seat forward or rearward.
After adjustment, try to move the seat forward and rearward to ensure that it is securely latched.

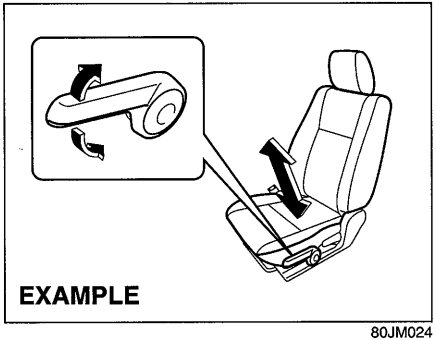

80JM024

If the driver's seat is equipped with a seat height adjuster lever on the outboard side of the seat, raise or lower the seat by pulling up or down the adjuster lever.

Adjusting Seatbacks

⚠ WARNING

All seatbacks should always be in an upright position when driving, or seat belt effectiveness may be reduced. Seat belts are designed to offer maximum protection when seatbacks are in the upright position.

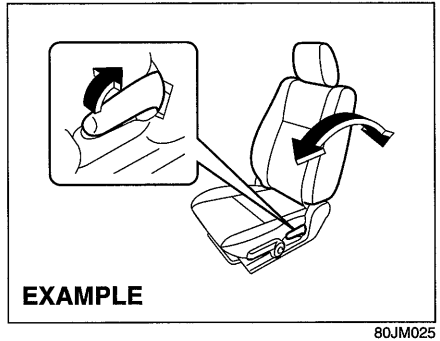

80JM025

To adjust the seatback angle of front seats, pull up the lever on the outboard side of the seat, move the seatback to the desired position, and release the lever to lock the seatback in place.

Walk-In Type Seats (if equipped)

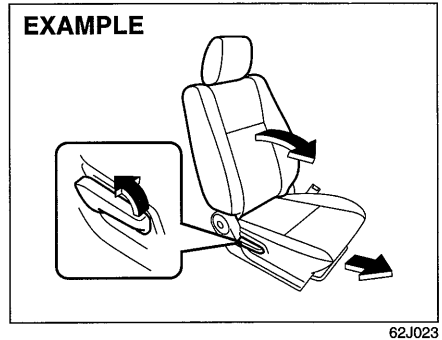

62J023

The walk-in type seat can be moved to provide easy entry to and exit from the rear seats. You can move the walk-in seat from outside the vehicle.

1) Pull up the lever on the outboard side of the front seat to recline the seatback forward.
2) Push the seatback forward to slide the seat.

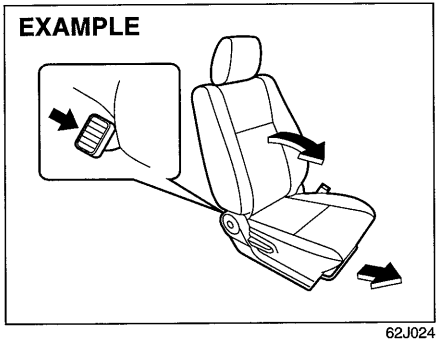

62J024

You can move the walk-in seat from inside the vehicle.

1) Depress the pedal on the back of the front seat to recline the seatback forward.
2) Push the seatback forward to slide the seat.

NOTE:
The front passenger's seat is only reclined by depressing the pedal on the back of the front seat. Be sure to push the seatback forward after depressing the pedal.

⚠ WARNING

- **After using the walk-in function, be sure to return the folded seat back to an upright position.**
- **Before returning a walk-in seat to its normal seating position, make sure that the feet of the passenger in the rear seat are out of the way.**
- **After returning the seat to its normal seating position, make sure it is securely latched.**

Head Restraints

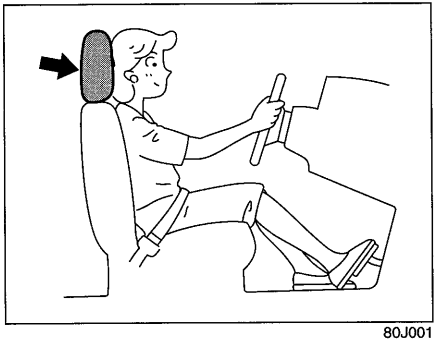

80J001

Head restraints are designed to help reduce the risk of neck injuries in the case of an accident. Adjust the head restraint to the position which places the center of the head restraint closest to the top of your ears. If this is not possible for very tall passengers, adjust the head restraint as high as possible.

⚠ WARNING

- **Never drive the vehicle with the head restraints removed.**
- **Do not attempt to adjust the head restraint while driving.**

NOTE:
It may be necessary to recline the seatback to provide enough overhead clearance to remove the head restraint.

Front

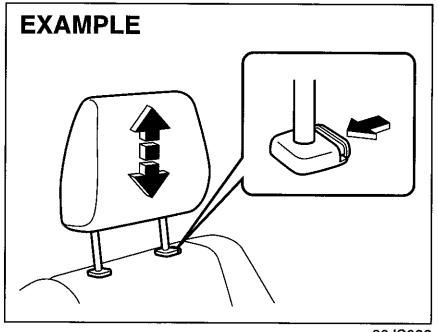

80JS082

To raise the front head restraint, pull upward on the restraint until it clicks. To lower the restraint, push down on the restraint while holding in the lock lever. If a head restraint must be removed (for cleaning, replacement, etc.), push in the lock lever and pull the head restraint all the way out.

Front Seat Heater (if equipped)

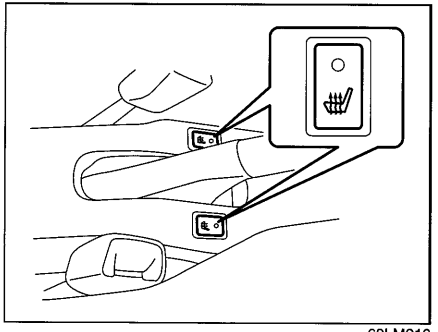

68LM216

With the ignition switch is in the "ON" position or the ignition mode is "ON", push in one or both of the seat heater switches to warm the corresponding seat(s). The indicator light below the switch will also come on. To turn off the seat heater, push in the switch again. The indicator light below the switch will go off.

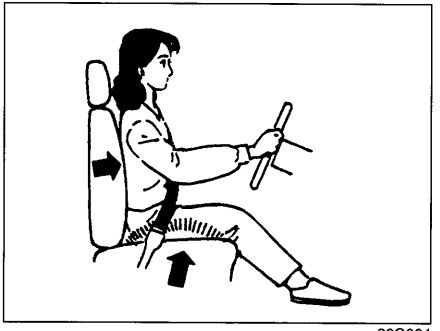

86G064

⚠ WARNING

Improperly using the seat heater can be hazardous. An occupant can suffer burns even if the heating temperature is fairly low, if the occupant is wearing thin pants, a thin skirt or shorts and leaves the heater on for long periods.
Avoid using the seat heater for these occupants:
- **People who have reduced feeling in their legs, including the elderly or those with certain disabilities.**
- **Small children, or anyone with sensitive skin.**
- **People who are asleep or under the influence of alcohol or other drugs which make them tired.**

NOTICE

To avoid damaging the heater element:
- **Do not subject the front seats to heavy impacts, such as children jumping on them.**
- **Do not cover the seat with any insulating materials such as blankets or cushions.**

Rear Seats

Head Restraints

Head restraints are designed to help reduce the risk of neck injuries in the case of an accident.

⚠ WARNING

- **Never drive the vehicle with the head restraints removed.**
- **Do not attempt to adjust the head restraint while driving.**

NOTE:
It may be necessary to fold forward the seatback to provide enough overhead clearance to remove the head restraint.

Adjust the head restraint to the position which places the center of the head restraint closest to the top of your ears. If this is not possible for very tall passengers, adjust the head restraint as high as possible.

Rear

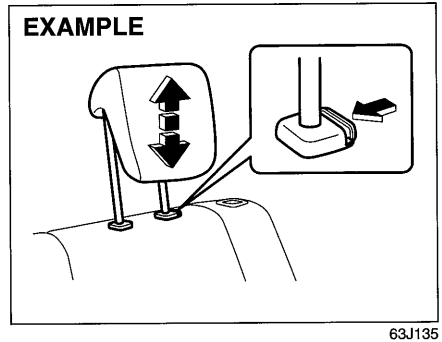

63J135

To raise the rear head restraint, pull upward on the restraint until it clicks. To lower the restraint, push down on the restraint while holding in the lock lever. If a head restraint must be removed (for cleaning, replacement, etc.), push in the lock lever and pull the head restraint all the way out.

When installing a child restraint system, raise the head restraint to the most upper position.

Folding Rear Seats

The rear seats of your vehicle can be folded forward to provide additional cargo space.

To fold the rear seats forward:

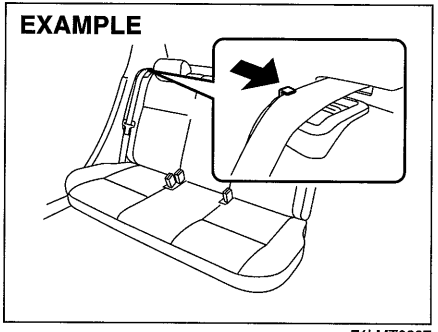

71LMT0207

1) Hook the webbing of the outboard lap-shoulder belts in the belt hangers.

NOTICE

- **When you move a seatback, make sure the belt webbing is hooked in the seat belt hangers so the seat belts are not caught by the seat-back, seat hinge, or seat latch. This helps prevent damage to the belt system.**
- **Make sure the belt webbing is not twisted.**

2) Lower the head restraint fully.
3) Store the center buckle in the seat back slit.

Split Seat

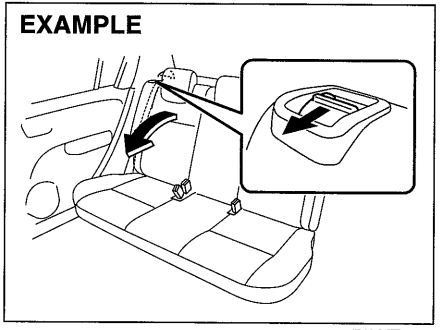

71LMT0208

Bench Seat

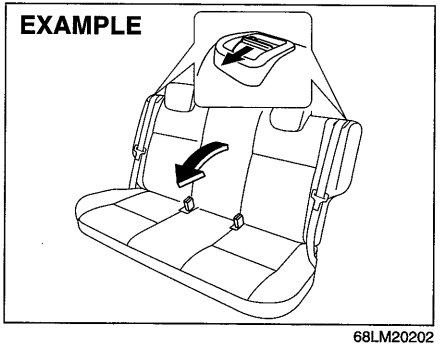

68LM20202

4) For the split seat, pull the release lever on the top of each split seat, and fold the seatbacks forward.
   For the bench seat, pull the both release levers on the top of the bench seat together, and fold the seatback forward.

NOTICE

After folding the rear seatback forward, do not allow any foreign material to enter the lock opening. This may cause damage to the inside of the lock and prevent the seatback from being locked securely.

⚠ WARNING

If you need to carry cargo in the passenger compartment with the rear seat back folded forward, be sure to secure the cargo or it may be thrown about, causing injury. Never pile cargo higher than the seatbacks.

To return the seat to the normal position, follow the procedure below.

⚠ CAUTION

When returning the rear seatback to the normal position, be careful that your finger is not caught between the lock and the striker.

NOTICE

- **When returning the rear seatback to the normal position, make sure that there is nothing around the striker. Any foreign materials prevent the seatback from being locked securely.**
- **When you move a seatback, make sure the belt webbing is hooked in the seat belt hangers so the seat belts are not caught by the seatback, seat hinge, or seat latch. This helps prevent damage to the belt system.**

Split Seat

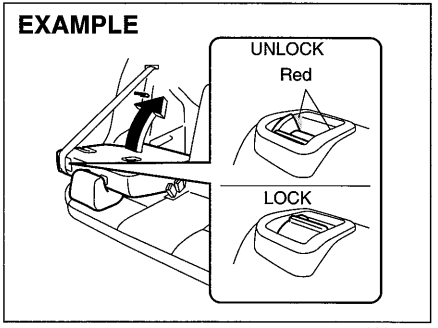

71LMT0209

Bench Seat

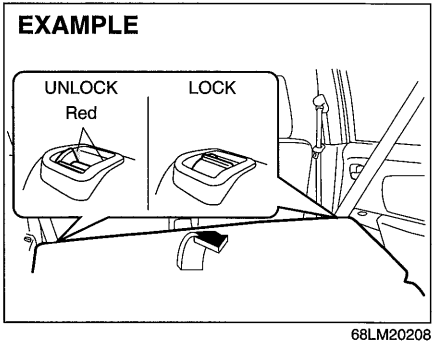

68LM20208

Raise the seatback until it locks into place.

After returning the seat, try moving the seatback to make sure they are securely latched.

⚠ CAUTION

Do not put your hand into the rear seatback lock opening, or your finger may get caught and be injured.

NOTICE

After securing the rear seatback, make sure that it is locked securely. If it is not, red will appear in the release lever.

NOTICE

- **When returning the rear seatback to the normal position, do not allow any foreign material to enter the lock opening. This may prevent the seatback from being locked securely.**
- **When returning the rear seatback to the normal position, be sure to handle it carefully by hand to avoid any damage to the lock itself. Do not push it by using some material or by applying excessive force.**
- **As the lock is designed exclusively for securing the rear seatback, do not use it for any other purpose. Incorrect use of it may cause damage to the inside of the lock and prevent the seatback from being locked securely.**

Seat Belts and Child Restraint Systems

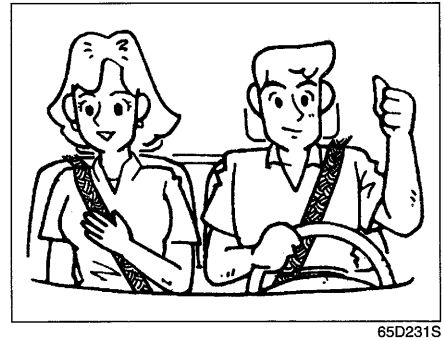

65D231S

⚠ WARNING

Wear Your Seat Belts at All Times.

⚠ WARNING

An air bag supplements, or adds to, the frontal crash protection offered by seat belts. The driver and all passengers must be properly restrained by wearing seat belts at all times, whether or not an air bag is mounted at their seating position, to minimize the risk of severe injury or death in the event of a crash.

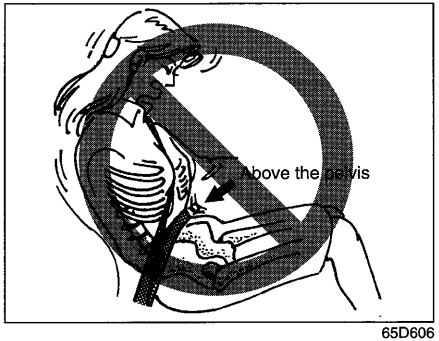

65D606

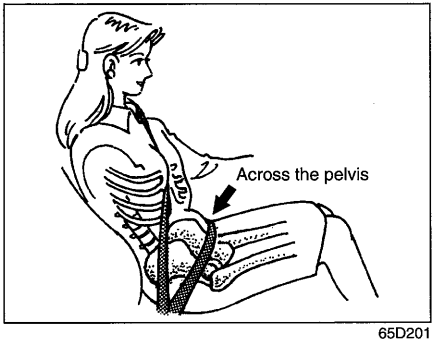

65D201

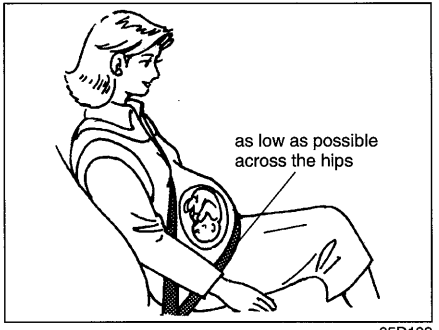

65D199

⚠ WARNING

- **Never allow persons to ride in the cargo area of a vehicle. In the event of an accident, there is a much greater risk of injury for persons who are not riding in a seat with their seat belt securely fastened.**
- **Seat belts should always be adjusted as follows:**
  - **the lap portion of the belt should be worn low across the pelvis, not across the waist.**
  - **the shoulder straps should be worn on the outside shoulder only, and never under the arm.**
  - **the shoulder straps should be away from your face and neck, but not falling off your shoulder.**

(Continued)

⚠ WARNING

(Continued)

- **Seat belts should never be worn with the straps twisted and should be adjusted as tightly as is comfortable to provide the protection for which they have been designed. A slack belt will provide less protection than one which is snug.**
- **Make sure that each seat belt buckle is inserted into the proper buckle catch. It is possible to cross the buckles in the rear seat.**

(Continued)

⚠ WARNING

(Continued)

- **Pregnant women should use seat belts, although specific recommendations about driving should be made by the woman's medical advisor. Remember that the lap portion of the belt should be worn as low as possible across the hips, as shown in the diagram.**
- **Do not wear your seat belt over hard or breakable objects in your pockets or on your clothing. If an accident occurs, objects such as glasses, pens, etc. under the seat belt can cause injury.**

(Continued)

⚠ WARNING

(Continued)

- **Never use the same seat belt on more than one occupant and never attach a seat belt over an infant or child being held on an occupant's lap. Such seat belt use could cause serious injury in the event of an accident.**
- **Periodically inspect seat belt assemblies for excessive wear and damage. Seat belts should be replaced if webbing becomes frayed, contaminated, or damaged in any way. It is essential to replace the entire seat belt assembly after it has been worn in a severe impact, even if damage to the assembly is not obvious.**
- **Children age 12 and under should ride properly restrained in the rear seat.**
- **Infants and small children should never be transported unless they are properly restrained. Restraint systems for infants and small children can be purchased locally and should be used. Make sure that the system you purchase meets applicable safety standards. Read and follow all the directions provided by the manufacturer.**

(Continued)

⚠ WARNING

(Continued)

- **For children, if the shoulder belt irritates the neck or face, move the child closer to the center of the vehicle.**
- **Avoid contamination of seat belt webbing by polishes, oils, chemicals, and particularly battery acid. Cleaning may safely be carried out using mild soap and water.**
- **Do not insert any items such as coins, clips, etc. into the seat belt buckles, and be careful not to spill liquids into these parts. If foreign materials get into a seat belt buckle, the seat belt may not work properly.**
- **All seatbacks should always be in an upright position when driving, or seat belt effectiveness may be reduced. Seat belts are designed to offer maximum protection when seatbacks are in the upright position.**

Lap-Shoulder Belt

Emergency Locking Retractor (ELR)

The seat belt has an emergency locking retractor (ELR), which is designed to lock the seat belt only during a sudden stop or impact. It also may lock if you pull the belt across your body very quickly. If this happens, let the belt go back to unlock it, then pull the belt across your body more slowly.

Safety reminder

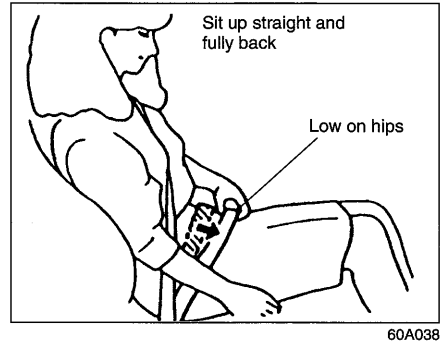

60A038

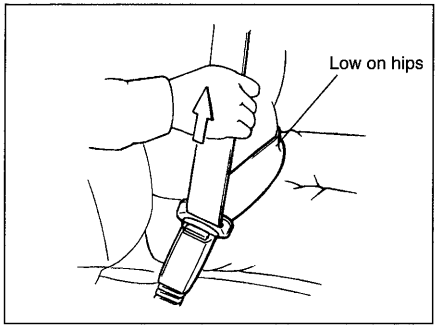

60A040

To reduce the risk of sliding under the belt during a collision, position the lap portion of the belt across your lap as low on your hips as possible and adjust it to a snug fit by pulling the shoulder portion of the belt upward through the latch plate. The length of the diagonal shoulder strap adjusts itself to allow freedom of movement.

All Seat Belts

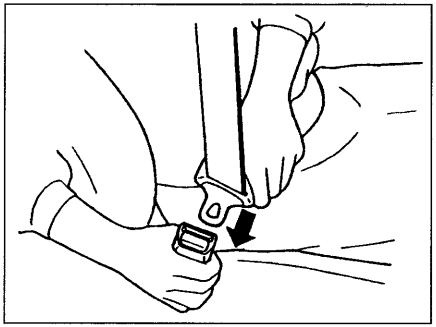

60A036

To fasten the seat belt, sit up straight and well back in the seat, pull the latch plate attached to the seat belt across your body and press it straight into the buckle until you hear a "click".

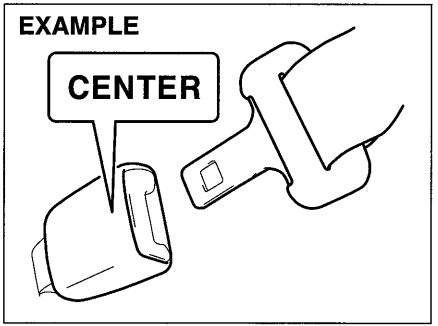

80J2008

NOTE:
The word "CENTER" is molded into the buckle for the rear center belt. The buckles are designed so a latch plate cannot be inserted into the wrong buckle.

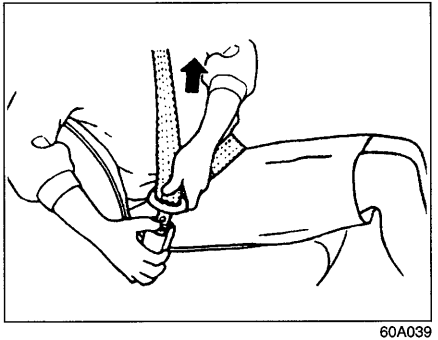

60A039

To unfasten the seat belt, push the red "PRESS" button on the buckle and retract the belt slowly while attaching a hand to the belt or/and the latch plate.

Seat Belt Reminder

Driver's seat belt reminder light

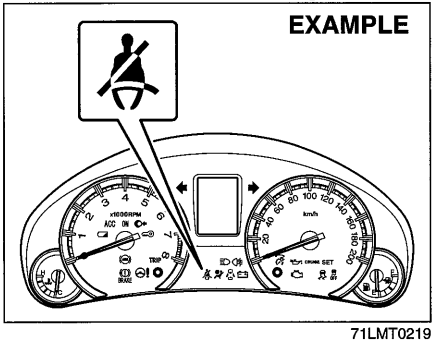

71LMT0219

Front passenger's seat belt reminder light

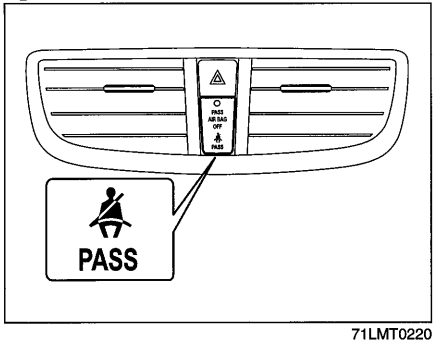

71LMT0220

When the driver and front passenger don't buckle their seat belts, the driver's seat belt reminder light in the instrument cluster and the front passenger's seat belt reminder light on the instrument panel will come on and a buzzer will sound as a reminder to the driver and front passenger to buckle their seat belts. For more details, refer to the explanation below.

⚠ WARNING

It is absolutely essential that the driver and passengers wear their seat belts at all times. Persons who are not wearing seat belts have a much greater risk of injury if an accident occurs. Make a regular habit of buckling your seat belt before putting the key in the ignition or pressing the engine switch.

Driver's seat belt reminder

If the driver's seat belt remains unbuckled when the ignition switch is turned to the "ON" position or the engine switch is pressed to change the ignition mode to "ON". The reminder works as follows:

1) The driver's seat belt reminder light will come on.
2) After the vehicle's speed has reached about 15 km/h, the driver's seat belt reminder light will blink and a buzzer will sound for about 95 seconds.
3) After step 2) has finished, the reminder light will remain on until the driver's seat belt is buckled.

If the driver has buckled his or her seat belt and later unbuckles the seat belt, the reminder system will be activated from step 1) or step 2) according to the vehicle's speed. When the vehicle's speed is below about 15 km/h, the reminder will start from step 1). When the vehicle's speed is above about 15 km/h, the reminder will start from step 2).

The reminder will be automatically canceled when the driver's seat belt is buckled or the ignition switch is turned off, or the engine switch is pressed to change the ignition mode to "LOCK" (OFF).

Front passenger's seat belt reminder

The front passenger's seat belt reminder will activate only when there is a passenger sitting in the front seat. In some situations, however, such as when you place heavy objects in the front seat, the seat belt reminder can be activated as if there were a passenger present. The front passenger's seat belt reminder works in the same manner as the driver's seat belt reminder.

Shoulder Anchor Height Adjuster

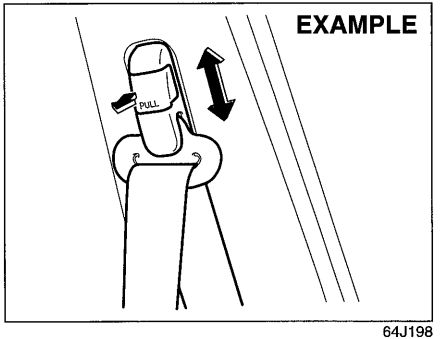

64J198

Adjust the shoulder anchor height so that the shoulder belt rides on the center of the outboard shoulder. To upward, slide the anchor up. To downward, slide the anchor down while pulling the lock knob out. After adjustment, make sure that the anchor is securely locked.

⚠ WARNING

Be sure that the shoulder belt is positioned on the center of the outside shoulder. The belt should be away from your face and neck, but not falling off your shoulder. Misadjustment of the belt could reduce the effectiveness of the safety belt in a crash.

Seat Belt Hanger

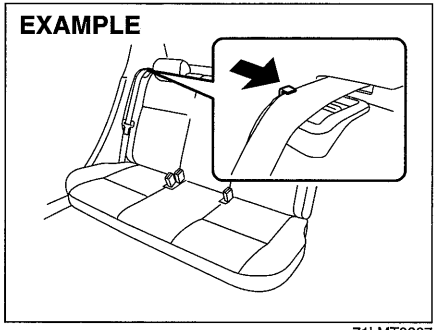

71LMT0207

NOTICE

When you move a seatback, make sure the belt webbing is hooked in the seat belt hangers so the seat belts are not caught by the seatback, seat hinge, or seat latch. This helps prevent damage to the belt system.

Seat Belt Inspection

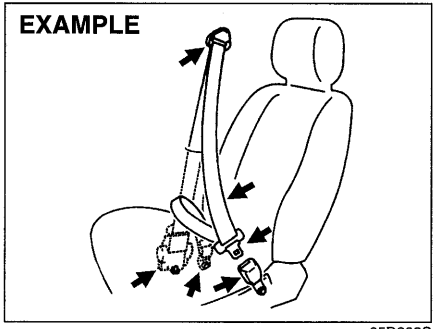

65D209S

Periodically inspect the seat belts to make sure they work properly and are not damaged. Check the webbing, buckles, latch plates, retractors, anchorages, and guide loops. Replace any seat belts which do not work properly or are damaged.

⚠ WARNING

Be sure to inspect all seat belt assemblies after any collision. Any seat belt assembly which was in use during a collision (other than a very minor one) should be replaced, even if damage to the assembly is not obvious. Any seat belt assembly which was not in use during a collision should be replaced if it does not function properly, it is damaged in any way or the seat belt pretensioners were activated (that is, if the front air bags were activated).

Child Restraint Systems

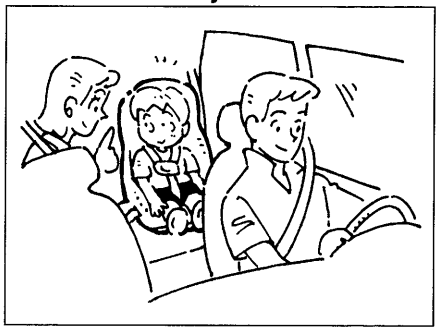

60G332S

Infant restraint - rear seat only

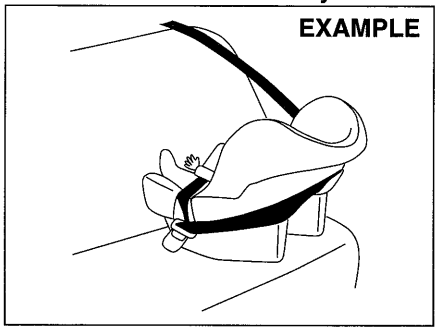

80JC007

Child restraint

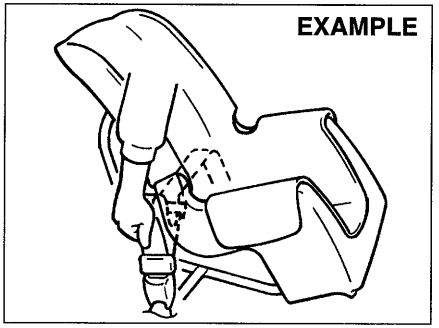

80JC016

Booster seat

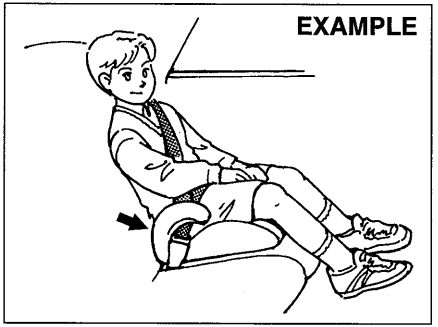

80JC008

SUZUKI highly recommends that you use a child restraint system to restrain infants and small children. Many different types of child restraint systems are available; make sure that the restraint system you select meets applicable safety standards.

All child restraint systems are designed to be secured in vehicle seats by either seat belts (lap belts or the lap portion of lap-shoulder belts) or by special rigid lower anchor bars built into the seat. Whenever possible, SUZUKI recommends that child restraint systems be installed on the rear seat. According to accident statistics, children are safer when properly restrained in rear seating positions than in front seating positions.

(For EU Countries)
When purchasing a child restraint and install it to your SUZUKI, refer to the information about suitability for child restrains shown in "Child Restraint System for EU Countries" in this section.

NOTE:
Observe any statutory regulation about child restraints.

58MS030

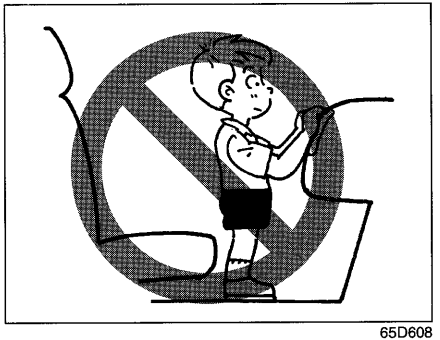

65D608

⚠ WARNING

Children could be endangered in a crash if their child restraint systems are not properly secured in the vehicle. When installing a child restraint system, be sure to follow the instructions below. Be sure to secure the child in the restraint system according to the manufacturer's instructions.

⚠ WARNING

When using a child restraint system on the front passenger's seat, the front passenger's air bag system must be deactivated; otherwise deployment of the front passenger's air bag could result in the death or serious injury of the child.

⚠ WARNING

If you install a child restraint system in the rear seat, slide the front seat far enough forward so that the child's feet do not touch the front seatback. This will help avoid injury to the child in the event of an accident.

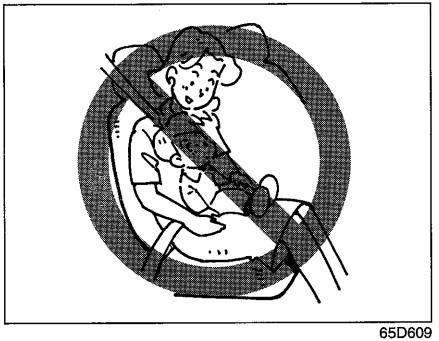

65D609

Child Restraint System for EU Countries

Child Restraint

The suitability of each passenger's seat position for carriage of children and fitting of child restraint system is shown in the table below. Whenever you carry children under 12 years of age or smaller than 150 cm, properly use the child restraints which conform to ECE-R Norm 44, the standard for child restraints, referring to the table.

Table of vehicle handbook information on child restraint systems installation suitability for various seating positions

In case the front passenger airbag is activated.

Mass Group		Seating position (or other site)				
		Front Passenger	Rear Outboard	Rear Center	Intermediate Outboard	Intermediate Center
group 0	up to 10 kg	X	U	U	N.A.	N.A.
group 0+	up to 13 kg	X	U	U	N.A.	N.A.
group I	9 to 18 kg	X	U	U	N.A.	N.A.
group II	15 to 25 kg	X	UF	UF	N.A.	N.A.
group III	22 to 36 kg	X	UF	UF	N.A.	N.A.

In case the front passenger airbag is deactivated.

Mass Group		Seating position (or other site)				
		Front Passenger	Rear Outboard	Rear Center	Intermediate Outboard	Intermediate Center
group 0	up to 10 kg	U	U	U	N.A.	N.A.
group 0+	up to 13 kg	U	U	U	N.A.	N.A.
group I	9 to 18 kg	U	U	U	N.A.	N.A.
group II	15 to 25 kg	UF	UF	UF	N.A.	N.A.
group III	22 to 36 kg	UF	UF	UF	N.A.	N.A.

Key of letters to be inserted in the above table:

U =Suitable for 'universal' category restraints approved for use in this mass group
UF =Suitable for forward-facing 'universal' category restraints approved for use in this mass group
L =Suitable for particular child restraints given on attached list.
These restraints may be of the 'specific vehicle', 'restricted' or 'semi-universal' categories.
B =Built-in restraint approved for this mass group
X =Seat position not suitable for children in this mass group

NOTE:
'universal' is the category in the ECE regulation-Norm 44.

Table of vehicle handbook information on ISOFIX child restraint systems installation suitability for various ISOFIX positions

Mass Group		Size class	Fixture	Vehicle ISOFIX positions					
				Front Passenger	Rear Outboard	Rear Center	Intermediate Outboard	Intermediate Center	Others sites
carrycot		F	ISO/L1	N.A.	N.A.	N.A.	N.A.	N.A.	N.A.
		G	ISO/L2	N.A.	N.A.	N.A.	N.A.	N.A.	N.A.
group 0	up to 10 kg	E	ISO/R1	N.A.	IL[1)]	N.A.	N.A.	N.A.	N.A.
group 0+	up to 13 kg	E	ISO/R1	N.A.	IL[1)]	N.A.	N.A.	N.A.	N.A.
		D	ISO/R2	N.A.	IL[1)]	N.A.	N.A.	N.A.	N.A.
		C	ISO/R3	N.A.	IL[2)]	N.A.	N.A.	N.A.	N.A.
group I	9 to 18 kg	D	ISO/R2	N.A.	IL[1)]	N.A.	N.A.	N.A.	N.A.
		C	ISO/R3	N.A.	IL[2)]	N.A.	N.A.	N.A.	N.A.
		B	ISO/F2	N.A.	IL,IUF[1)]	N.A.	N.A.	N.A.	N.A.
		B1	ISO/F2X	N.A.	IL,IUF[3)]	N.A.	N.A.	N.A.	N.A.
		A	ISO/F3	N.A.	IL,IUF[1)]	N.A.	N.A.	N.A.	N.A.
group II	15 to 25 kg			N.A.	N.A.	N.A.	N.A.	N.A.	N.A.
group III	22 to 36 kg			N.A.	N.A.	N.A.	N.A.	N.A.	N.A.

Key of letters to be inserted in the above table

IUF=Suitable for ISOFIX forward child restraints systems of universal category approved for use in this mass group
IL =Suitable for particular ISOFIX CRS are those of the "specific vehicle", "restricted" or "semi-universal" categories.
The ISOFIX CRS must be approved for the specific vehicle type.
X =ISOFIX position not suitable for ISOFIX child restraint systems in this mass group and/or this size class.

NOTE:
1) The head restraint should be in its using position.
2) The head restraint should be in its using position.
For "semi-universal" category ;
Front seat longitudinal adjustment should be from the foremost position to the 8 notches rearward.
SUZUKI recommends FAIR G 0/1 S ISOFIX child seat and RWF ISOFIX platform
SUZUKI Genuine Accessory part number
990E0-68L01-000 ISOFIX platform
990E0-68L01-001 Child seat EAST district (PL, H, CZ, SK, SLO, RO, BG, GR, MK, CY & HR)
990E0-68L01-002 Child seat CENTRAL SOUTH district (F, B, NL, L, E, P, I, D, GB, M, CY, CN, J & ROK)
990E0-68L01-003 Child seat NORTH district (GB, S, FIN, DK, EST, LV, LT, IS, N & RUS)
Ask authorized SUZUKI dealer for detailed district information.
3) The head restraint should be adjusted to the highest position.
SUZUKI recommends Britax/RÖMER DUO plus (SUZUKI Genuine Accessory part number : 99000-990YA-020)

NOTE:
'universal' is the category in the ECE regulation-Norm 44.

Installation with Lap-Shoulder Seat Belts

NOTICE

Before installing a child restraint system in the rear seat, raise the head restraint to the most upper position.

ELR type belt

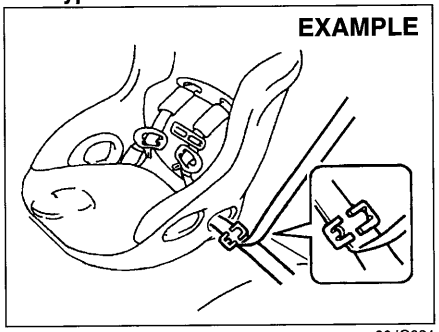

80JC021

Install your child restraint system according to the instructions provided by the child restraint system manufacturer.

Make sure that the seat belt is securely latched.

Try to move the child restraint system in all directions to make sure it is securely installed.

Installation with ISOFIX type Anchorages

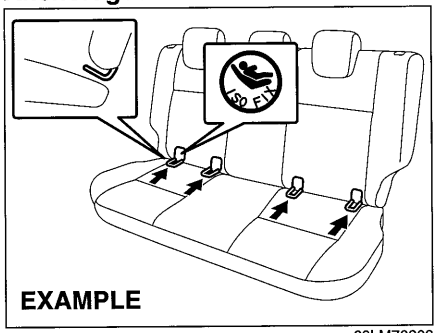

68LM70203

Your vehicle is equipped with the lower anchorages in the rear seat outboard seating positions for securing a ISOFIX type of child restraints with the connecting bars. The lower anchorages are located where the rear of the seat cushion meets the bottom of the seatback.

⚠ WARNING

Be sure to install the ISOFIX type of child restraint(s) in the only outboard seating positions, not in the central position for rear seat.

Install the ISOFIX type child restraint system according to the instructions provided by the child restraint system manufacturer. After installing, try moving the child restraint system in all directions especially forward to make sure the connecting bars are securely latched to the anchorages.

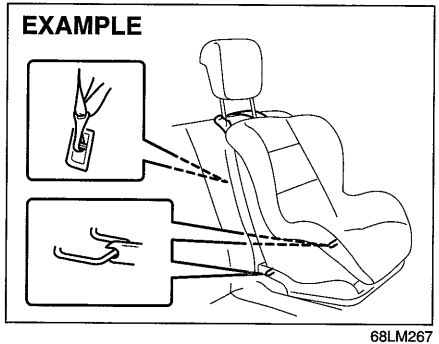

68LM267

Your vehicle is equipped with the top strap anchorages, be sure to use the top strap of the child restraint according to the instructions provided by the child restraint system manufacturer.

Here is a general instruction:

1) Raise the head restraint to the most upper position.

NOTICE
Before installing a child restraint system in the rear seat, raise the head restraint to the most upper position.

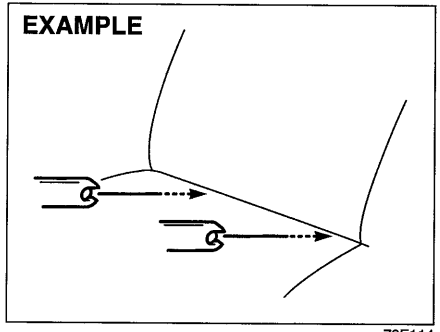

78F114

2) Place the child restraint in the rear seat, inserting the connecting bars to the anchorages between the seat cushion and the seatback.

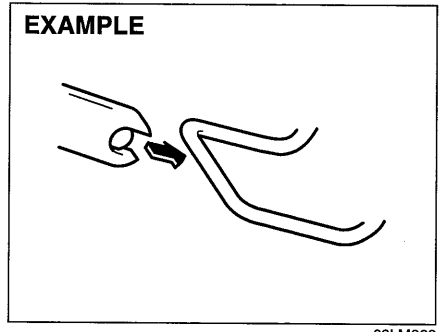

68LM268

3) Use your hands to carefully align the connecting bar tips with the anchorages. Take care not to pinch your fingers.

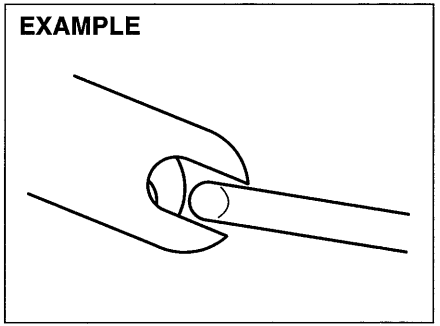

54G184

4) Push the child restraint toward the anchorages so that the connecting bar tips are partially hooked to the anchorages. Use your hands to confirm the position.

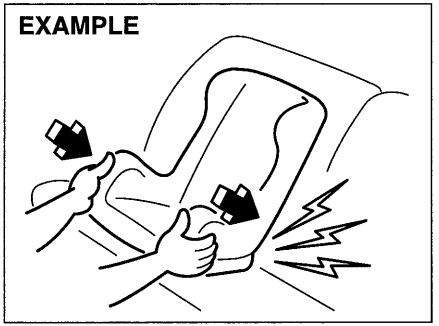

54G185

5) Grasp the front of the child restraint and push the child restraint forcefully to latch the connecting bars. Make sure they are securely latched by trying to move the child restraint system in all directions, especially forward.
6) Attach the top strap referring to "Installation of Child Restraint with Top Strap" section below.

Installation of Child Restraint with Top Strap

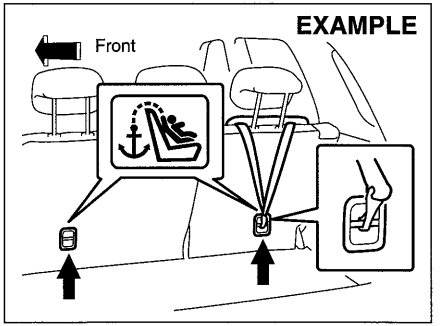

68LM20205

Some child restraint systems require the use of a top strap. Top strap anchor brackets are provided in your vehicle at the locations shown in the illustrations. The number of the anchor bracket provided in your vehicle depends on the vehicle specification. Install the child restraint system as follows:

1) Remove the luggage compartment cover.
2) Secure the child restraint on the rear seat using the procedure described above for securing a restraint system that does not require a top strap.
3) Hook the top strap to the anchor bracket and tighten the top strap according to the instructions provided by the child restraint system manufacturer. Be sure to attach the top strap to the corresponding anchor located directly behind the child restraint. Do not attach the top strap to the luggage restraint loops (if equipped).

⚠ WARNING

Do not attach the child restraint top strap to the luggage restraint loops (if equipped). Incorrectly attached top strap will reduce the intended effectiveness of the child restraint system.

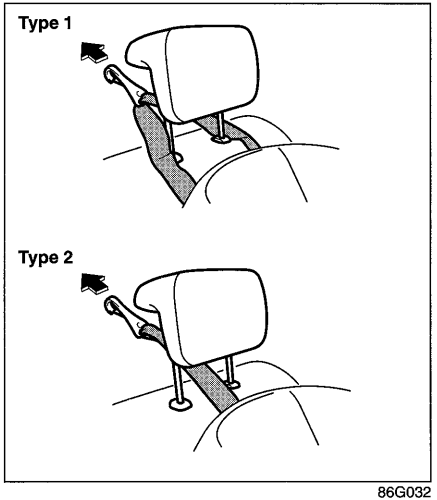

86G032

4) When routing the top strap, be sure to pass the top strap as shown in the illustration. (Refer to "Head Restraints" section for details on how to raise or lower the head restraint.)
5) Make sure that cargo does not interfere with routing of the top strap.

Seat Belt Pretensioner System

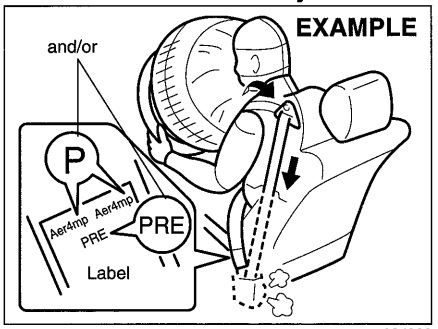

63J269

⚠ WARNING

This section of the owner's manual describes your SUZUKI's SEAT BELT PRETENSIONER SYSTEM. Please read and follow ALL these instructions carefully to minimize your risk of severe injury or death.

To determine if your vehicle is equipped with a seat belt pretensioner system at the front seating positions, check the label on the front seat belt at the bottom part. If the letters "p" and/or "PRE" appear as illustrated, your vehicle is equipped with the seat belt pretensioner system. You can use the pretensioner seat belts in the same manner as ordinary seat belts.

Read this section and the "Supplemental Restraint System (air bags)" section to learn more about the pretensioner system.

The seat belt pretensioner system works with the SUPPLEMENTAL RESTRAINT SYSTEM (Air Bags). The crash sensors and the electronic controller of the air bag system also control the seat belt pretensioners. The pretensioners are triggered only when there is a frontal or side crash severe enough to trigger the air bags and the seat belts are fastened. For precautions and general information including servicing the pretensioner system, refer to the "Supplemental Restraint System (air bags)" section in addition to this "Seat Belt Pretensioner System" section, and follow all those precautions.

The pretensioner is located in each front seat belt retractor. The pretensioner tightens the seat belt so the belt fits the occupant's body more snugly in the event of a frontal or side crash. The retractors will remain locked after the pretensioners are activated. Upon activation, some noise will occur and some smoke may be released. These conditions are not harmful and do not indicate a fire in the vehicle.

The driver and all passengers must be properly restrained by wearing seat belts at all times, whether or not a pretensioner is equipped at their seating position, to minimize the risk of severe injury or death in the event of a crash.

Sit fully back in the seat; sit up straight; do not lean forward or sideways. Adjust the belt so the lap portion of the belt is worn low across the pelvis, not across the waist. Please refer to the "Seat Adjustment" section and the instructions and precautions about the seat belts in this "Seat Belts and Child Restraint Systems" section for details on proper seat and seat belt adjustments.

Please note that the pretensioners along with the air bags will activate in severe frontal or side collisions. They are not designed to activate in rear impacts, rollovers, or minor frontal collisions. The pretensioners can be activated only once. If the pretensioners are activated (that is, if the air bags are activated), have the pretensioner system serviced by an authorized SUZUKI dealer as soon as possible.

If the "AIR BAG" light on the instrument cluster does not blink or come on briefly when the ignition switch is turned to the "ON" position or the engine switch is pressed to change the ignition mode to "ON", stays on for more than 10 seconds, or comes on while driving, the pretensioner system or the air bag system may not work properly. Have both systems inspected by an authorized SUZUKI dealer as soon as possible.

Service on or around the pretensioner system components or wiring must be performed only by an authorized SUZUKI dealer who is specially trained. Improper service could result in unintended activation of pretensioners or could render the pretensioner inoperative. Either of these two conditions may result in personal injury.

To prevent damage or unintended activation of the pretensioners, be sure the battery is disconnected and the ignition switch has been in the "LOCK" position or the ignition mode has been "LOCK" (OFF) for at least 90 seconds before performing any electrical service work on your SUZUKI.

Do not touch pretensioner system components or wiring. The wires are wrapped with yellow tape or yellow tubing, and the couplers are yellow. When scrapping your SUZUKI, ask your SUZUKI dealer, body repair shop, or scrap yard for assistance.

Supplemental Restraint System (air bags)

⚠ WARNING

This section of the owner's manual describes the protection provided by your SUZUKI's SUPPLEMENTAL RESTRAINT SYSTEM (air bags). Please read and follow ALL these instructions carefully to minimize your risk of severe injury or death in the event of a collision.

Your vehicle is equipped with a Supplemental Restraint System consisting of the following components in addition to a lap-shoulder belt at each front seating position.

1. Driver's front air bag module
2. Front passenger's front air bag module
3. Side air bag module
4. Side curtain air bag module
5. Knee air bag module
6. Seat belt pretensioners
7. Air bag controller
8. Forward crash sensor
9. Side crash sensor

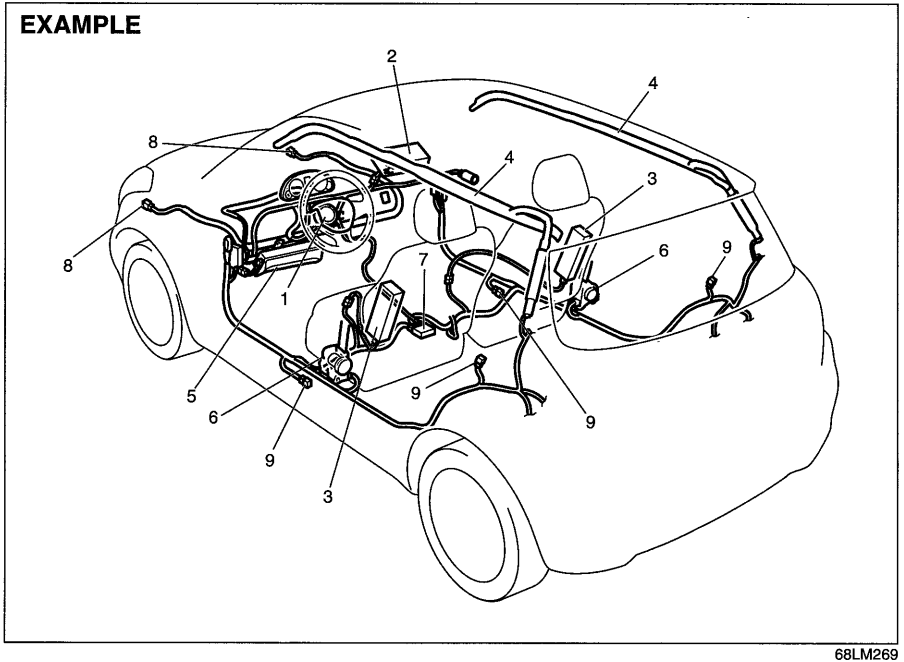

68LM269

63J030

If the "AIR BAG" light on the instrument cluster does not blink or come on when the ignition switch is first turned to the "ON" position, or the ignition mode is first changed to "ON", or the "AIR BAG" light stays on, or comes on while driving, the air bag system (or the seat belt pretensioner system) may not work properly. Have the air bag system inspected by an authorized SUZUKI dealer as soon as possible.

Front Air Bags

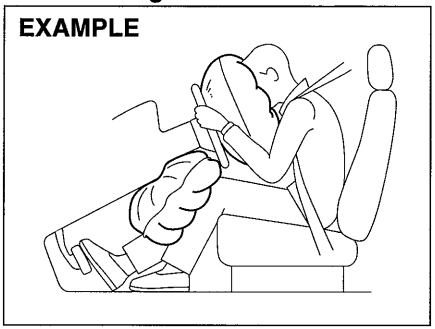

57L21189

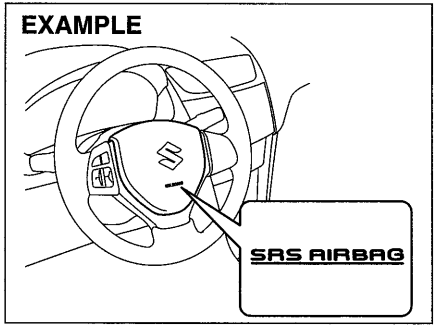

68LM219

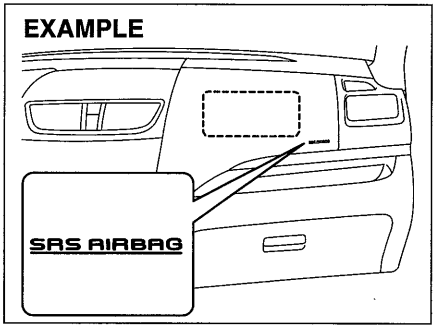

68LMT0210

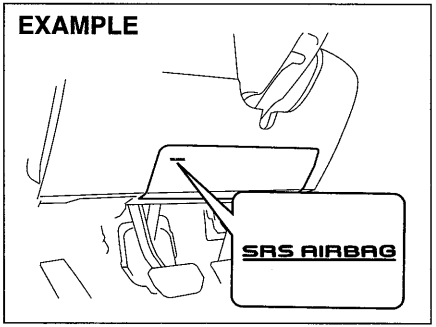

68LM20206

The driver's front air bag is located behind the center pad of the steering wheel and the front passenger's front air bag is located behind the passenger's side of the dashboard.

The front knee air bag is located in the dashboard below the steering wheel. The words "SRS AIRBAG" are molded into the air bag covers to identify the location of the air bags.

Frontal collision range

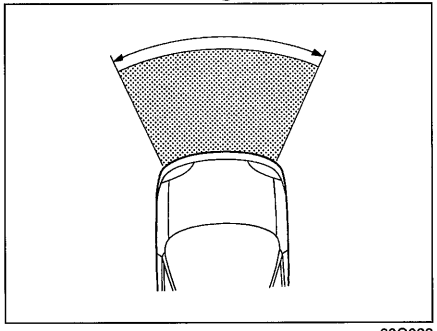

60G032

Front air bags are designed to inflate in severe frontal collisions.

NOTE:
In a frontal angle collision, the side air bags and side curtain air bags may inflate.

Front air bags will not inflate

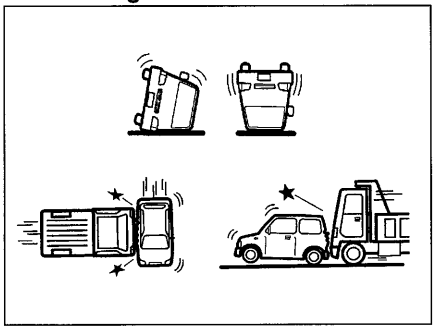

65D236

Front air bags will probably not inflate

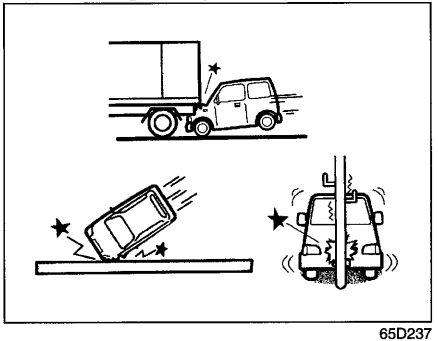

65D237

Front air bags are not designed to inflate in rear impacts, side impacts, rollovers or minor frontal collisions, since they would offer no protection in those types of accidents. Remember, since an air bag deploys only one time during an accident, seat belts are needed to restrain occupants from further movements during the accident.

Therefore, an air bag is NOT a substitute for seat belts. To maximize your protection, ALWAYS WEAR YOUR SEAT BELTS. Be aware that no system can prevent all possible injuries that may occur in an accident.

⚠ WARNING

An air bag supplements, or adds to, the crash protection offered by seat belts. The driver and all passengers must be properly restrained by wearing seat belts at all times, whether or not an air bag is mounted at their seating position, to minimize the risk of severe injury or death in the event of a crash.

58MS030

⚠ WARNING

When using child restraint system on the front passenger's seat, the front passenger's air bag system must be deactivated; otherwise deployment of the front passenger's air bag could result in the death or serious injury of the child.

Please refer to the "Seat Belts and Child Restraint Systems" section in the "BEFORE DRIVING" section for details on securing your child.

Air bag symbol meaning

72M00150

You may find this label on the sun visor.

⚠ WARNING

NEVER use a rearward facing child restraint on a seat protected by an ACTIVE AIRBAG in front of it, DEATH or SERIOUS INJURY to the CHILD can occur.

Side Air Bags and Side Curtain Air Bags

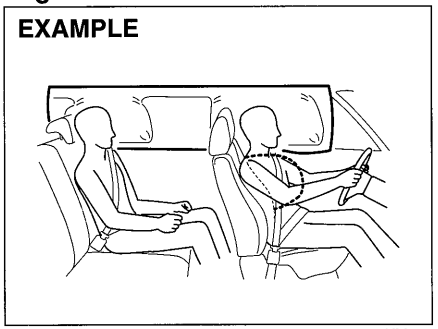

68KM090

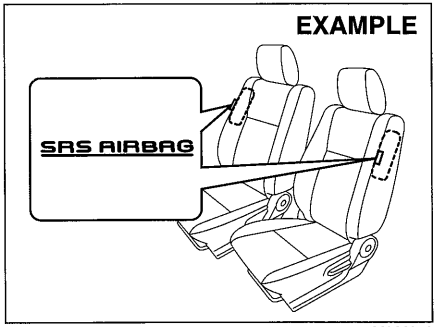

68LM256

Side air bags are located in the part of the front seatbacks closest to the doors. The "SRS AIRBAG" labels are attached to the seatbacks to identify the location of the side air bags.

⚠ WARNING

When using child restraint system on the front passenger's seat, the front passenger's air bag system must be deactivated; otherwise deployment of the front passenger's air bag could result in the death or serious injury of the child.

EXAMPLE

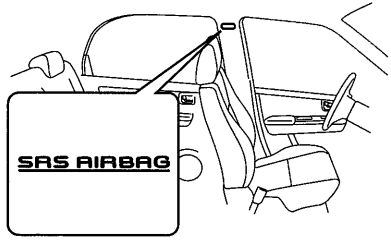

68LM252

Side curtain air bags are located in the roof lining. The words "SRS AIRBAG" are molded into the pillar to identify the location of the side curtain air bags.

Side collision range

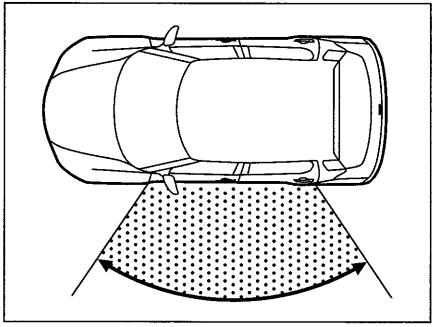

80JM032

Side air bags and side curtain air bags are designed to inflate in severe side impact collisions.

Side air bags and side curtain air bags will not inflate

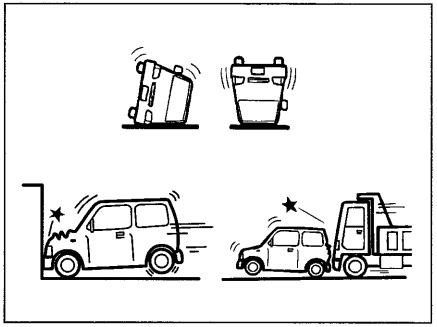

54G027

Side air bags and side curtain air bags will probably not inflate

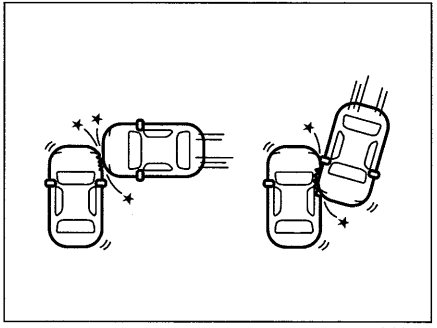

57L21126

Side air bags and side curtain air bags are not designed to inflate in frontal or rear col-

lisions, rollovers or minor side collisions, since they would offer no protection in those types of accidents. Only the side air bag and side curtain air bag on the side of the vehicle that is struck will inflate. However, in a frontal angle collision, the side air bags and side curtain air bags may inflate. Remember, since an air bag deploys only one time during an accident, seat belts are needed to restrain occupants from further movements during the accident.

Therefore, an air bag is NOT a substitute for seat belts. To maximize your protection, ALWAYS WEAR YOUR SEAT BELTS. Be aware that no system can prevent all possible injuries that may occur in an accident.

⚠ WARNING

An air bag supplements, or adds to, the crash protection offered by seat belts. The driver and all passengers must be properly restrained by wearing seat belts at all times, whether or not an air bag is mounted at their seating position, to minimize the risk of severe injury or death in the event of a crash.

How the System Works

In a frontal collision, the crash sensors will detect rapid deceleration, and if the controller judges that the deceleration represents a severe frontal crash, the controller will trigger the inflators. If your vehicle is equipped with side air bags and side curtain air bags, crash sensors will detect a side collision, and if the controller judges that the side collision is severe enough, it will trigger the side air bag and side curtain air bag inflators. The inflators inflate the appropriate air bags with nitrogen or argon gas. The inflated air bags provide a cushion for your head (front air bags and side curtain air bags only) and upper body. The air bag inflates and deflates so quickly that you may not even realize that it has activated. The air bag will neither hinder your view nor make it harder to exit the vehicle.

Air bags must inflate quickly and forcefully in order to reduce the chance of serious or fatal injuries. However, an unavoidable consequence of the quick inflation is that the air bag may irritate bare skin, such as the facial area against a front air bag. Also, upon inflation, a loud noise will occur and some powder and smoke will be released. These conditions are not harmful and do not indicate a fire in the vehicle. Be aware, however, that some air bag components may be hot for a while after inflation.

A seat belt helps keep you in the proper position for maximum protection when an air bag inflates. Adjust your seat as far back as possible while still maintaining control of the vehicle. Sit fully back in your seat; sit up straight; do not lean over the steering wheel or dashboard. Front occupants should not lean on or sleep against the door. Please refer to the "Seat Adjustment" section and the "Seat Belts and Child Restraint Systems" section in the "BEFORE DRIVING" section for details on proper seat and seat belt adjustments.

65D610

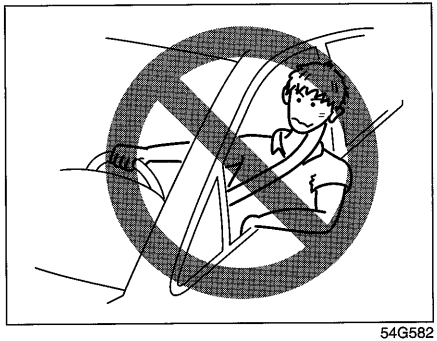

54G582

⚠ WARNING

- **The driver should not lean over the steering wheel. The front passenger should not rest his or her body against the dashboard, or otherwise get too close to the dashboard. For vehicles with side air bags and side curtain air bag, occupants should not lean on or sleep against the door. In these situations, the out-of-position occupant would be too close to an inflating air bag, and may suffer severe injury.**
- **Do not attach any objects to, or place any objects over, the steering wheel or dashboard. Do not place any objects between the air bag and the driver or front passenger. These objects may interfere with air bag operation or may be propelled by the air bag in the event of a crash. Either of these conditions may cause severe injury.**
- **For vehicles with side air bags, do not place seat covers on the front seats, because seat covers could restrict the air bag's inflation. Also, do not place any cup holders on the door, as the cup holder could be propelled by the air bag in the event of a crash. Either of these conditions may cause severe injury.**

(Continued)

⚠ WARNING

(Continued)

- **Do not paint, put a sticker on, or attach things like accessories to the dashboard below the steering wheel. Failure to observe this precaution may prevent normal inflation of the knee air bag in the event of a collision.**

Note that even though your vehicle may be moderately damaged in a collision, the collision may not have been severe enough to trigger the front, side, or side curtain air bags to inflate. If your vehicle sustains ANY front-end or side damage, have the air bag system inspected by an authorized SUZUKI dealer to ensure it is in proper working order.

Your vehicle is equipped with a diagnostic module which records information about the air bag system if the air bags deploy in a crash. The module records information about overall system status, which sensors activated the deployment.

Servicing the air bag system

If the air bags inflate, have the air bags and related components replaced by an authorized SUZUKI dealer as soon as possible.

If your vehicle ever gets in deep water and the driver's floor is submerged, the air bag controller could be damaged. If it does,

have the air bag system inspected by the SUZUKI dealer as soon as possible.

Special procedures are required for servicing or replacing an air bag. For that reason, only an authorized SUZUKI dealer should be allowed to service or replace your air bags. Please remind anyone who services your SUZUKI that it has air bags.

Service on or around air bag components or wiring must be performed only by an authorized SUZUKI dealer. Improper service could result in unintended air bag deployment or could render the air bag inoperative. Either of these two conditions may result in severe injury.

To prevent damage or unintended inflation of the air bag system, be sure the battery is disconnected and the ignition switch has been in the "LOCK" position or the ignition mode has been "LOCK" (OFF) for at least 90 seconds before performing any electrical service work on your SUZUKI. Do not touch air bag system components or wires. The wires are wrapped with yellow tape or yellow tubing, and the couplers are yellow for easy identification.

Scrapping a vehicle that has an uninflated air bag can be hazardous. Ask your dealer, body repair shop or scrap yard for help with disposal.

Front Passenger Air Bag Deactivation System

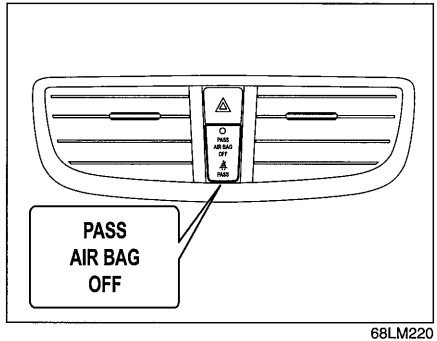

68LM220

The front passenger's front air bag must be deactivated if a child restraint system is to be installed on the front passenger's seat. When the ignition switch is turned to the "ON" position or the engine switch is pressed to change the ignition mode to "ON", the "PASSENGER AIR BAG OFF" indicator shows whether the front passenger's air bag is activated or deactivated.

When the front passenger's air bag is activated:
The "PASSENGER AIR BAG OFF" indicator comes on a few seconds, and then goes off.

When the front passenger's air bag is deactivated:
The "PASSENGER AIR BAG OFF" indicator comes on a few seconds, and then remains on.
When you activate or deactivate the front passenger's air bag, make sure whether the air bag deactivation indicator is off or on before starting the engine.

Side air bags, side curtain air bags and seat belt pretensioners are not connected to the air bag deactivation system. Even if the front passenger's air bag is deactivated, side air bags, side curtain air bags and seat belt pretensioners are still activated.

58MS030

⚠ WARNING

When using child restraint system on the front passenger's seat, the front passenger's air bag must be deactivated; otherwise deployment of the front passenger's air bag could result in the death or serious injury of the child.

⚠ WARNING

Make sure the front passenger's air bag is activated and the air bag deactivation indicator is off whenever there is no child restraint installed on the front passenger's seat.

According to accident statistics, children are safer when properly restrained on rear seats than front passenger's seat. Whenever possible, SUZUKI recommends that child restraint systems be installed on the rear seat.

Air bag deactivation switch

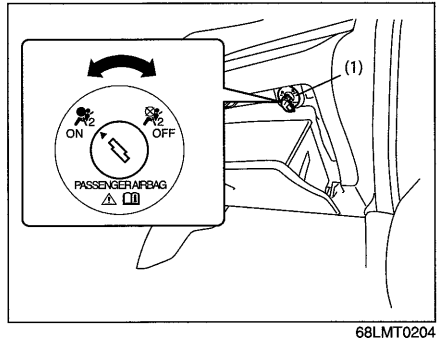

68LMT0204

The air bag deactivation switch (1) is installed only for use when a rearward-facing child restraint system or infant restraint system is installed in the front passenger's seat. The switch is located at the upper-right corner inside the glove box.

To deactivate the front passenger's air bag, follow the instructions below before starting the engine.

1) Make sure the ignition switch is in "LOCK" position or the engine switch is in "LOCK" (OFF) mode.
2) Insert the key into the air bag deactivation switch (1), then push and turn the key to the "OFF" (air bag off) position, and pull out the key.
3) Turn the ignition switch to "ON" position or press the engine switch to change the ignition mode to "ON". The "PASSENGER AIR BAG OFF" indicator comes on a few seconds, and then remains on to remind you the front passenger's air bag is deactivated.

To activate the front passenger's air bag, follow the instructions below before starting the engine.

1) Make sure the ignition switch is in "LOCK" position or the engine switch is in "LOCK" (OFF) mode.
2) Insert the key into the air bag deactivation switch (1), then push and turn the key to the "ON" (air bag on) position, and pull out the key.
3) Turn the ignition switch to "ON" position or press the engine switch to change the ignition mode to "ON". The "PASSENGER AIR BAG OFF" indicator comes on a few seconds, and then goes off to remind you the front passenger's air bag is activated.

Instrument Cluster

1. Speedometer
2. Tachometer
3. Fuel gauge
4. Temperature gauge
5. Information display
6. Trip meter selector knob
7. Indicator selector knob
8. Warning and indicator lights

EXAMPLE

Models with tachometer

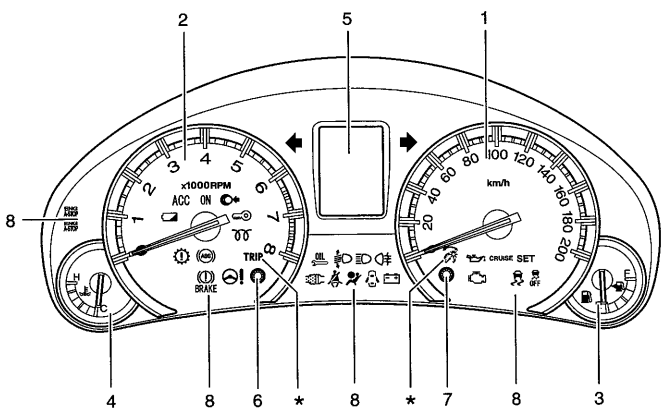

Models without tachometer

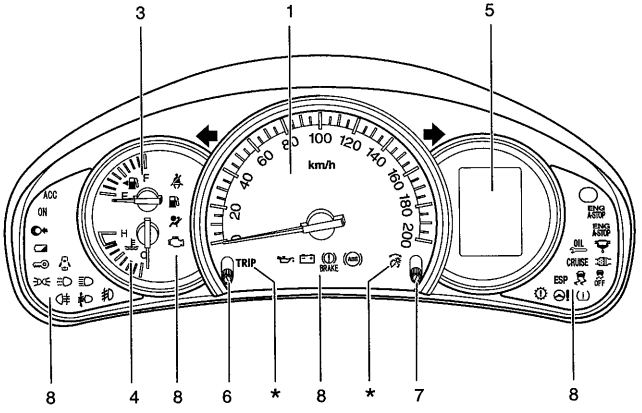

68LM20207

* These marks are explanation of the knobs 6 and 7. Refer to “Information Display” in this section for detail of knobs.

Warning and Indicator Lights

Brake System Warning Light

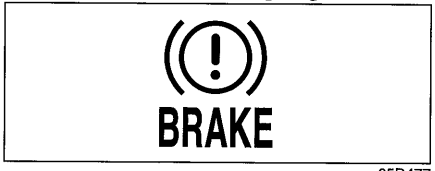

65D477

Three different types of operations exist depending on the vehicle's specification.

1) The light comes on briefly when the ignition switch is turned to the "ON" position or the engine switch is pressed to change the ignition mode to "ON".
2) The light comes on when the parking brake is engaged with the ignition switch in the "ON" position or the ignition mode "ON".
3) The light comes on when under either or both of above two conditions.

The light also comes on when the fluid in the brake fluid reservoir falls below the specified level.

The light should go out after starting the engine and fully releasing the parking brake, if the fluid level in the brake fluid reservoir is adequate.

The light also comes on together with the ABS warning light when the rear brake force control function (proportioning valve function) of the ABS system fails.

If the brake system warning light comes on while you are driving the vehicle, it may mean that there is something wrong with the vehicle's brake system. If this happens, you should:

1) Pull off the road and stop carefully.

⚠ WARNING

Remember that stopping distance may be longer, you may have to push harder on the pedal, and the pedal may go down farther than normal.

2) Test the brakes by carefully starting and stopping on the shoulder of the road.
3) If you determine that it is safe, drive cautiously at low speed to the nearest dealer for repairs,
   or
4) Have the vehicle towed to the nearest dealer for repairs.

⚠ WARNING

If any of the following conditions occur, you should immediately ask your SUZUKI dealer to inspect the brake system.

- **If the brake system warning light does not go out after the engine has been started and the parking brake has been fully released.**
- **If the brake system warning light does not come on when the ignition switch is turned to the "ON" position or the engine switch is pressed to change the ignition mode to "ON".**
- **If the brake system warning light comes on at any time during vehicle operation.**

NOTE:
Because the brake system is self-adjusting, the fluid level will drop as the brake pads become worn. Replenishing the brake fluid reservoir is considered normal periodic maintenance.

NOTE:
(Parking Brake Reminder Buzzer)
A buzzer sounds intermittently to remind you to release the parking brake if you start the vehicle without releasing the parking brake. Make sure that the parking brake is fully released and the brake system warning light turns off.

Anti-Lock Brake System (ABS) Warning Light

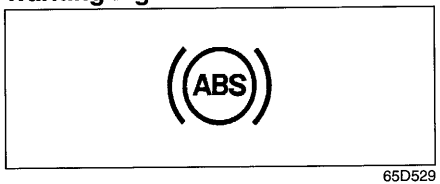

65D529

When the ignition switch is turned to the "ON" position or the engine switch is pressed to change the ignition mode to "ON", the light comes on briefly so you can check that the light is working.
If the light stays on, or comes on when driving, there may be something wrong with the ABS.

If this happens:
1) Pull off the road and stop carefully.
2) Turn the ignition switch to "LOCK" or change the ignition mode to "LOCK" (OFF) by pressing the engine switch and then start the engine again.

If the warning light comes on briefly then turns off, the system is normal. If the warning light still stays on, the system will be something wrong.

If the light and the brake system warning light stay on, or come on simultaneously when driving, your ABS system is equipped with the rear brake force control function (proportioning valve function) and there may be something wrong with both the rear brake force control function and anti-lock function of the ABS system.

If one of these happens, have the system inspected by your SUZUKI dealer.
If the ABS becomes inoperative, the brake system will function as an ordinary brake system that does not have this ABS system.

For details of ABS system, refer to "Anti-Lock Brake System (ABS)" in the "OPERATING YOUR VEHICLE" section.

ESP® Warning Light

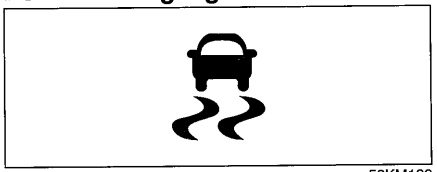

52KM133

ESP® is a registered trademark of Daimler AG.

This light blinks 5 times per second when one of the ESP® systems other than ABS is activated. If this light blinks, drive carefully.

When the ignition switch is turned to the "ON" position or the engine switch is pressed to change the ignition mode to "ON", the light comes on briefly so you can check that the light is working. If the light stays on, or comes on when driving and remains on, there may be something wrong with the ESP® systems (other than ABS). You should have the system inspected by an authorized SUZUKI dealer.

For details of the ESP® systems, refer to "Electronic Stability Program (ESP®)" in the "OPERATING YOUR VEHICLE" section.

⚠ WARNING

The ESP® systems cannot prevent accidents. Always drive carefully.

ESP® OFF Indicator Light

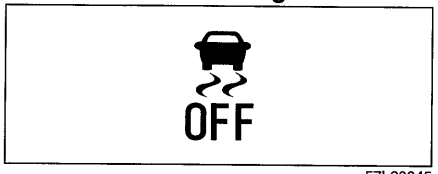

57L30045

When the ignition switch is turned to the "ON" position or the engine switch is pressed to change the ignition mode to "ON", this light comes on briefly so you can check that the light is working.

When the ESP® OFF switch is pushed to turn off the ESP® systems (other than ABS), the ESP® OFF indicator light comes on and stays on.

For details of the ESP® systems, refer to "Electronic Stability Program (ESP®)" in the "OPERATING YOUR VEHICLE" section.

Oil Pressure Light

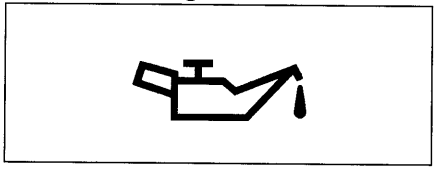

50G051

This light comes on when the ignition switch is turned to the "ON" position or the engine switch is pressed to change the ignition mode to "ON", and goes out when the engine is started. The light will come on and remain on if there is insufficient oil pressure. If the light comes on when driving, pull off the road as soon as you can and stop the engine.
Check the oil level and add oil if necessary. If there is enough oil, the lubrication system should be inspected by your SUZUKI dealer before you drive the vehicle again.

NOTICE

- **If you operate the engine with this light on, severe engine damage can result.**
- **Do not rely on the oil pressure light to indicate the need to add oil. Be sure to periodically check the engine oil level.**

Charging Light

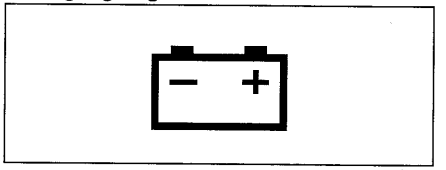

50G052

This light comes on when the ignition switch is turned to the "ON" position or the engine switch is pressed to change the ignition mode to "ON", and goes out when the engine is started. The light will come on and remain on if there is something wrong with the battery charging system. If the light comes on when the engine is running, the charging system should be inspected immediately by your SUZUKI dealer.

Driver's Seat Belt Reminder Light

60G049

When the driver doesn't buckle his or her seat belt, this light will come on and/or blink.
For details about the seat belt reminder, refer to "Seat Belts and Child Restraint Systems" in this section.

"AIR BAG" Light

63J030

This light blinks or comes on for several seconds when the ignition switch is turned to the "ON" position or the engine switch is pressed to change the ignition mode to "ON" so you can check if the light is working.

The light will come on and stay on if there is a problem in the air bag system or the seat belt pretensioner system.

⚠ WARNING

If the "AIR BAG" light does not blink or come on briefly when the ignition switch is turned to the "ON" position or the engine switch is pressed to change the ignition mode to "ON", stays on for more than 10 seconds, or comes on while driving, the air bag system or the seat belt pretensioner system may not work properly. Have both systems inspected by an authorized SUZUKI dealer.

Malfunction Indicator Light

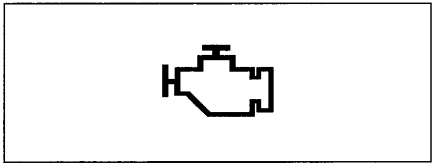

65D530

Your vehicle has a computer-controlled emission control system. A malfunction indicator light is provided on the instrument panel to indicate when it is necessary to have the emission control system serviced. The malfunction indicator light comes on when the ignition switch is turned to the "ON" position or the engine switch is pressed to change the ignition mode to "ON" to let you know the light is working and goes out when the engine is started.

If the malfunction indicator light comes on or blinks when the engine is running, there is a damage in the emission control system.
Bring the vehicle to your SUZUKI dealer to have the damage fixed.

NOTICE

Continuing to drive the vehicle when the malfunction indicator light is on or blinking can cause permanent damage to the vehicle's emission control system, and can affect fuel economy and driveability.

Immobilizer/Keyless Push Start System Warning Light

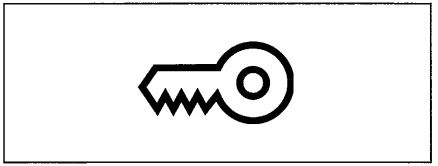

80JM122

When the ignition switch is turned to the "ON" position or the engine switch is pressed to change the ignition mode to "ON", the light comes on briefly so you can check that the light is working. If this light stays on, there is a problem with the system.

(Vehicle without Keyless Push Start System)
If this light blinks, turn the ignition switch to the "LOCK" position, then turn it back to the "ON" position. If the light still blinks with the ignition switch turned to the "ON" position, there may be something wrong with your key or with the immobilizer system. Ask your SUZUKI dealer to inspect the system.
(Vehicle with Keyless Push Start System)
This light blinks if you press the engine switch while the system is not sensing the remote controller. For details, refer to "Immobilizer System" in this section or "Keyless Push Start System" in the "OPERATING YOUR VEHICLE" section.

Open Door Warning Light

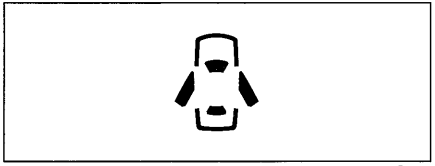

54G391

This light remains on until all doors (including the tailgate) are completely closed.

If any door (including the tailgate) is open when the vehicle is moving, a ding sounds to remind you to close all doors completely.

Low Fuel Warning Light

54G343

If this light comes on, fill the fuel tank immediately.

When this light comes on, a ding sounds once to remind you to fill the fuel.
If you do not fill the fuel, a ding sounds every time when the ignition switch is turned to the "ON" position or the engine switch is pressed to change the ignition mode to "ON".

NOTE:
The activation point of this light varies depending on road conditions (for example, slope or curve) and driving conditions because of fuel moving in the tank.

Electric Power Steering Light

79J039

This light comes on when the ignition switch is turned to the "ON" position or the engine switch is pressed to change the ignition mode to "ON", and goes out when the engine is started.

If this light comes on while driving, the power steering system may not work properly. Have the system inspected by your SUZUKI dealer.

NOTE:
Following operations of the steering wheel while parking or driving at a very low-speed may have steering effort bigger gradually. This is not a malfunction of the steering system, but the power steering control system limits the power assist in order to prevent them from overheating.
- *The steering wheel is operated very often.*
- *The steering wheel is kept in a fully turned position for a long while.*

When the power steering control system cool down, the power steering system back to the original condition.
However, repeating these operations could cause the power steering system damaged.

NOTE:
If the power steering system does not work properly, you will feel heavier to steer but you still will be able to steer.

NOTE:
If the steering is operated, you may hear a rubbing noise. This is normal and indicates that the power steering system works properly.

"CRUISE" Indicator Light (if equipped)

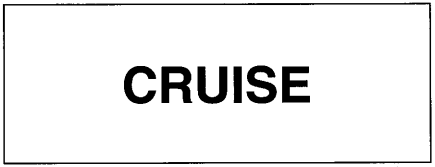

52D113

When the cruise control system is on, this light will be on.

"SET" Indicator Light (if equipped)

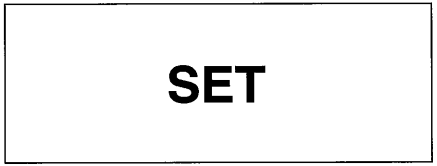

65D474

When the vehicle's speed is controlled by the cruise control system, this light will be on.

Automatic Headlight Leveling System Warning Light (if equipped)

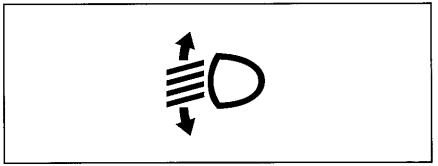

64J046

When the ignition switch is turned to the "ON" position or the engine switch is pressed to change the ignition mode to "ON", this light comes on briefly to let you know the light is working.

If this light comes on, there is a problem with the automatic headlight leveling system. Bring the vehicle to your SUZUKI dealer to have the problem corrected.

Rear Fog Light Indicator Light

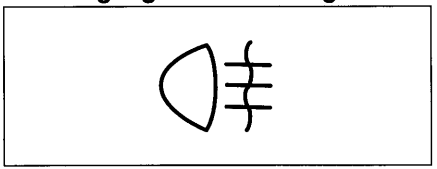

54G491

The rear fog light indicator light comes on when the rear fog light operates.

Turn Signal Indicators

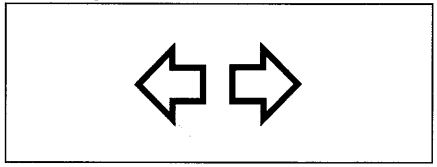

50G055

When you turn on the left or right turn signals, the corresponding green arrow on the instrument panel will flash along with the respective turn signal lights. When you turn on the hazard warning switch, both arrows will flash along with all of the turn signal lights.

Main Beam (high beam) Indicator Light

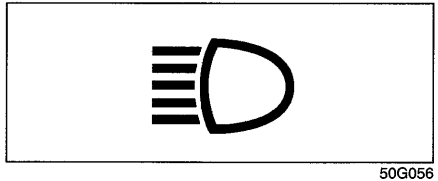

50G056

This indicator comes on when headlight main beams (high beams) are turned on.

Transaxle Warning Light (if equipped)

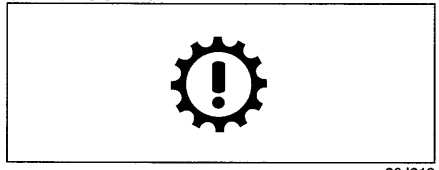

80J219

This light comes on for several seconds when the ignition switch is turned to the "ON" position or the engine switch is pressed to change the ignition mode to "ON" so you can check the light is working. If this light comes on, there is a problem with the transaxle system. Ask your SUZUKI dealer to have the system inspected.

Oil Change Request Light (For Diesel Engine Model)

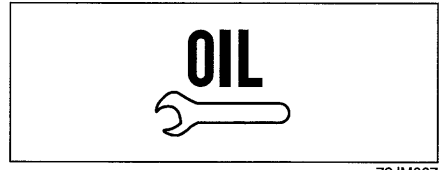

79JM007

Your vehicle has the oil life monitoring system and related Oil Change Request Light that alerts you to change the engine oil and filter.

This light comes on for several seconds when the ignition switch is turned to the "ON" position or the engine switch is pressed to change the ignition mode to "ON" so you can check that light is working.

If this light blinks when the engine is running, you should change the engine oil and oil filter immediately since the monitoring system has calculated that oil life has been diminished by a deterioration of engine oil. When the engine oil and oil filter are changed, and the oil life monitoring system is reset, this light will go out. For details on how to change the engine oil, refer to "Changing Engine Oil and Filter" in "INSPECTION AND MAINTENANCE" section.
Whenever the engine oil is changed, the light must be reset to monitor the next oil

change timing properly. To reset the light, consult your SUZUKI dealer.

NOTICE
Severe engine damage will result, if you keep operating the engine after this light blinking. **Change the engine oil and filter immediately when the light blinks.**

NOTE:
Note that engine oil degrades faster under the following circumstances:
- *Mainly urban use of the vehicle, requiring more frequent regeneration of the DPF;*
- *Use of the vehicle for short drives, in which the engine does not have time to reach its regular operating temperature;*
- *Repeated interruptions to the regeneration process signaled by the DPF warning light coming on.*

Glow Plug Indicator Light (if equipped) (For Diesel Engine Model)

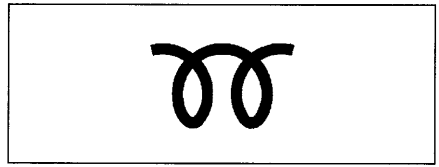

60A543

If the coolant temperature is cool enough, this light comes on when the ignition switch is turned to the "ON" position or the engine switch is pressed to change the ignition mode to "ON" and goes out when the glow plug is heated enough for engine starting.

NOTE:
Following the repair on engine control unit (ECU) in the starting system, the glow plug indicator light comes on for approximately 10 seconds before the engine starts. This is not the engine malfunction.

Diesel Particulate Filter (DPF®) Warning Light (For Diesel Engine Model)

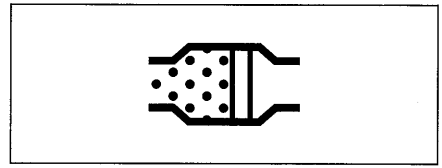

64J244

This light comes on for several seconds when the ignition switch is turned to the "ON" position or the engine switch is pressed to change the ignition mode to "ON" so you can check that light is working. If the light comes on when driving, the DPF® is nearly clogged. To go out the warning light, the vehicle must stay in motion until regeneration has been completed.
The process normally takes about 25 minutes.
The optimum condition to end the process are achieved by keeping the vehicle in motion at a speed of 50 km/h (31 mph) or higher, or an engine speed higher than 2,000 rpm.

If you drive your vehicle until the light goes out, the regeneration of the DPF® will be completed.

For details of the DPF®, refer to "Diesel Particulate Filter" in the "OPERATING YOUR VEHICLE" section.

NOTICE

Be sure to regenerate the DPF® when the DPF® warning light comes on. Failure to regenerate the DPF® will cause the vehicle malfunction due to the clogged filter.

"ENG A-STOP" Indicator Light / Warning Light (if equipped)

68LMT0209

When the ignition switch is turned to the "ON" position, the "ENG A-STOP" indicator light (green) and "ENG A-STOP" warning light (amber) come on briefly so you can check that the light is working.

When the "ENG A-STOP" indicator light (green) illuminates the engine stops automatically.

Two different types of operations exist depending on the vehicle's specification.

If this happens:

- **"ENG A-STOP" Indicator Light (green)**
  This light blinks when the engine will restart automatically even if the engine was stopped by the ENG A-STOP system.
- **"ENG A-STOP" Warning Light (amber)**
  If the light stays on, or comes on when driving, there may be something wrong with the ENG A-STOP system.
  You should have the system inspected by an authorized SUZUKI dealer.

NOTE:
If the light comes on when driving, you may have to replace the starter motor or the battery. Ask an authorized SUZUKI dealer for details.

Keyless Push Start System Remote Controller Battery Consumption Warning Light (if equipped)

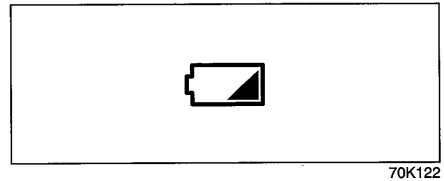

70K122

If the remote controller becomes unreliable, this light comes on for several seconds when the engine switch is pressed to change the ignition mode to "ON".

"PUSH" Indicator Light (if equipped)

82K174

If this light comes on when depressing the brake pedal for automatic transaxle vehicles, or the clutch pedal for manual transaxle vehicles, you can start the engine.

"ACC" Indicator Light (if equipped)

ACC

82K097

This light comes on when the ignition mode is "ACC".

Ignition "ON" Indicator Light (if equipped)

ON

82K098

This light comes on when the ignition mode is "ON" with the engine off.

Speedometer

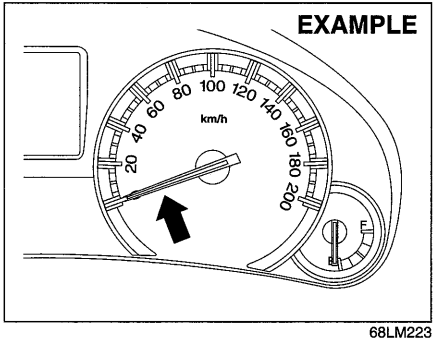

68LM223

The speedometer indicates vehicle speed in km/h and/or mph.

Tachometer (if equipped)

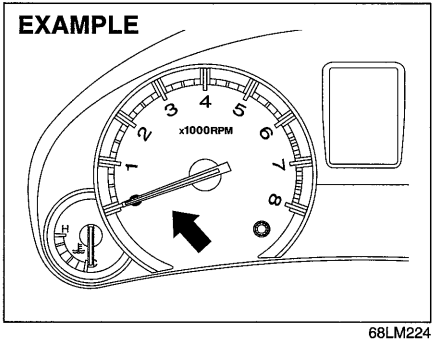

68LM224

The tachometer indicates engine speed in revolutions per minute.

NOTICE

Never drive the vehicle with the engine revving in the red zone or severe engine damage can result.
Keep the engine speed below the red zone even when downshifting to a lower gear position.
Refer to "Downshifting maximum allowable speeds" in the "OPERATING YOUR VEHICLE" section.

(Except for Sport model)
NOTE:
Maximum engine speed is limited at approximately 5000 revolutions per minute by the fuel cut control when you press the accelerator pedal while the gearshift is in "P" (Park) or "N" (Neutral).

(For Sport model)
NOTE:
Maximum engine speed is limited at approximately 6000 revolutions per minute by the fuel cut control when you press the accelerator pedal while the gearshift is in "N" (Neutral).

Fuel Gauge

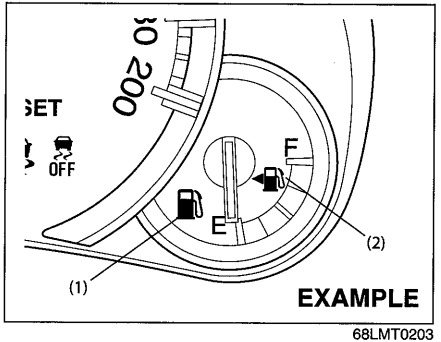

68LMT0203

When the ignition switch is in the "ON" position or the ignition mode is "ON", this gauge gives an approximate indication of the amount of fuel in the fuel tank. "F" stands for full and "E" stands for empty.

If the indicator gets off the graduation of "E" (not character "E"), refill the tank as soon as possible.

NOTE:
The indicator moves a little depending on road conditions (for example, slope or curve) and driving conditions because of fuel moving in the tank.

If the low fuel warning light (1) comes on, fill the fuel tank immediately.

When the low fuel warning light (1) comes on, a ding sounds once to remind you to fill the fuel.
If you do not fill the fuel, a ding sounds every time when the ignition switch is turned to "ON" position or the engine switch is pressed to change the ignition mode to "ON".

NOTE:
The activation point of the low fuel warning light (1) varies depending on road conditions (for example, slope or curve) and driving conditions because of fuel moving in the tank.

The mark (2) indicates that the fuel filler door is located on the left side of the vehicle.

Temperature Gauge

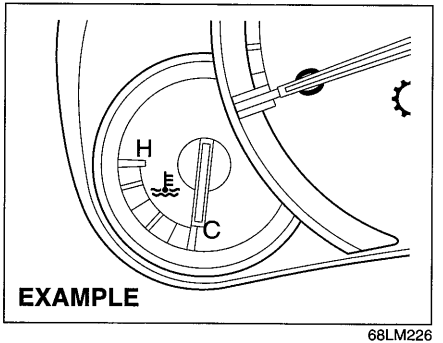

68LM226

When the ignition switch is in the "ON" position or the ignition mode is "ON", this gauge indicates the engine coolant temperature. Under normal driving conditions, the indicator should stay within the normal, acceptable temperature range between "H" and "C". If the indicator approaches "H", overheating is indicated. Follow the instructions for engine overheating in the "EMERGENCY SERVICE" section.

NOTICE
Continuing to drive the vehicle when engine overheating is indicated can result in severe engine damage.

Brightness Control

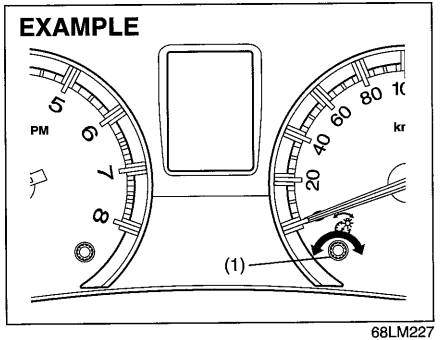

68LM227

When the ignition switch is turned to the "ON" position or the engine switch is pressed to change the ignition mode to "ON", the pointer lights come on.

Your vehicle has a system to automatically dim the brightness of the instrument panel lights when the position lights or headlights are on.

When the position lights and/or headlights are ON, you can control the meter illumination intensity.

To increase the brightness of the instrument panel lights, turn the brightness control knob (1) clockwise.

To reduce the brightness of the instrument panel lights, turn the brightness control knob (1) counterclockwise.

NOTE:
- *If you do not turn the brightness control knob within about 5 seconds of activating the brightness control display, the brightness control display will be canceled automatically.*
- *When you reconnect the battery, the brightness of the instrument panel lights will be reinitialized. Readjust the brightness according to your preference.*

NOTE:
If you select the high brightness level when the position lights or headlights are on, the instrument panel lights are not dimmed.

Information Display

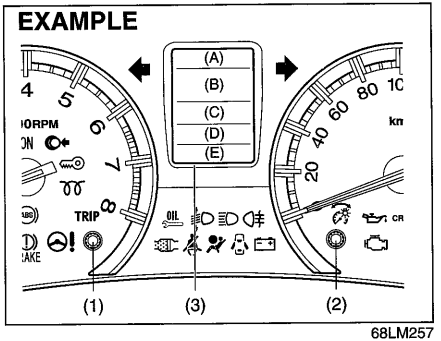

68LM257

(1) Trip meter selector knob
(2) Indicator selector knob
(3) Information display

When the ignition switch is in the "ON" position or the ignition mode is "ON", the information display shows the following information.

Display (A)
Thermometer

Display (B) (for automatic transaxle vehicles)
Transaxle selector position indicator

Display (C)
Trip meter / Instantaneous fuel consumption / Average fuel consumption / Driving range / Distance until the next changing engine oil (For Diesel Engine Model)

Display (D)
Odometer

Display (E)
Clock

Thermometer

When the ignition switch is in the "ON" position or the ignition mode is "ON", the display (A) shows the thermometer.
The thermometer indicates the outside temperature.

EXAMPLE

68LM258

If the outside temperature nears freezing, the mark (a) will appear on the display.

NOTE:
- *The outside temperature indication is not the actual outside temperature when driving at low speed, or when stopped.*
- *If there is something wrong with the thermometer, or just after the ignition switch is turned to the "ON" position or the engine switch is pressed to change the ignition mode to "ON", the display may not indicate the outside temperature.*

When the display (C) shows the driving range, you can change the unit of temperature.

To change the unit of temperature, while pushing and holding the trip meter selector knob (1), turn the indicator selector knob (2).

EXAMPLE

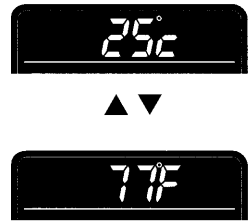

68LM259

NOTE:
When you reconnect the negative (–) terminal to the battery, the unit of temperature will be reinitialized. Change the unit again to your preference.

Transaxle selector position indicator (for automatic transaxle vehicles)

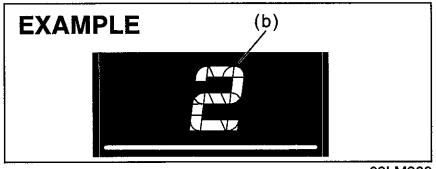

68LM260

When the ignition switch is in the "ON" position or the ignition mode is "ON", the display (B) indicates the gear position (b). For details on how to use the transaxle, refer to "Using the Transaxle" in the "OPERATING YOUR VEHICLE" section.

Trip meter / Instantaneous fuel consumption / Average fuel consumption / Driving range / Distance until the next changing engine oil (For Diesel Engine Model)

When the ignition switch is in the "ON" position or the ignition mode is "ON", the display (C) shows one of the following six indications, trip meter A, trip meter B, Instantaneous fuel consumption, Average fuel consumption, Driving range or Distance until the next changing engine oil (For Diesel Engine Model).

To switch the display indication (C), push the trip meter selector knob (1) or the indicator selector knob (2) quickly.

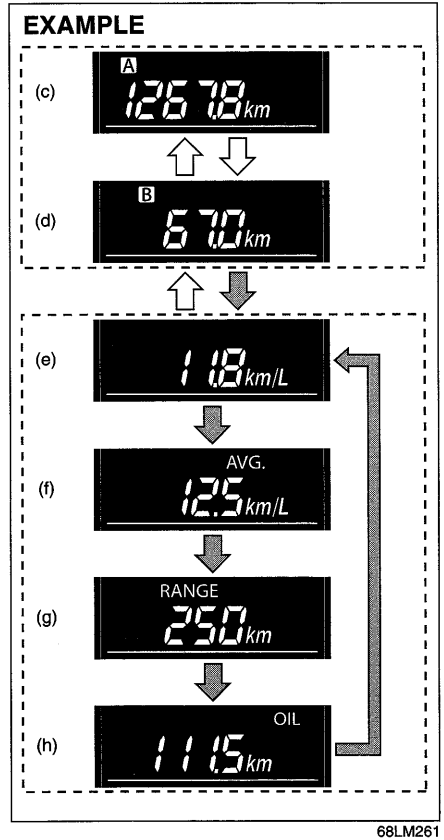

68LM261

⇧⇩	Push the trip meter selector knob (1).
⇧⇩	Push the indicator selector knob (2).

(c) Trip meter A
(d) Trip meter B
(e) Instantaneous Fuel Consumption
(f) Average fuel consumption
(g) Driving range
(h) Distance until the next changing engine oil (For Diesel Engine Model)

⚠ WARNING

If you attempt to adjust the display while driving, you could lose control of the vehicle.

Do not attempt to adjust the display while driving.

NOTE:
- *Indications will change when you push and release a knob.*
- *The display shows estimated values. Indications may not be the same as actual values.*

Trip meter
The trip meter can be used to measure the distance traveled on short trips or between fuel stops.
You can use the trip meter A or trip meter B independently.

To reset the trip meter to zero, push and hold the trip meter selector knob (1) for a while when the display shows the trip meter.

NOTE:
The indicated maximum value of the trip meter is 9999.9. When you run past the maximum value, the indicated value will return to 0.0.

Instantaneous Fuel Consumption
If you selected instantaneous fuel consumption the last time you drove the vehicle, the display does not show the last value of instantaneous fuel consumption from previous driving when the ignition switch is turned to the "ON" position or the engine switch is pressed to change the ignition mode to "ON". The display shows the value only when the vehicle is moving.

NOTE:
- *The display does not show the value unless the vehicle is moving.*
- *Depending on the vehicle's specification, the fuel consumption units of initial setting are indicated as L/100km, km/L or MPG.*
- *For "L/100km" or "km/L" setting, the indicated maximum value of instantaneous fuel consumption is 30. No more than 30 will be indicated on the display even if the actual instantaneous fuel consumption is higher.*
- *For "MPG" setting, the indicated maximum value of instantaneous fuel consumption is 99.9. No more than 99.9 will be indicated on the display even if the actual instantaneous fuel consumption is higher.*
- *The indication on the display may be delayed if fuel consumption is greatly affected by driving conditions.*
- *The display shows estimated values. Indications may not be the same as actual values.*

- *For "L/100km" or "km/L" setting, you can change the units that instantaneous fuel consumption is displayed in. Refer to "Average fuel consumption" in this section.*

Average fuel consumption
If you selected average fuel consumption the last time you drove the vehicle, the display shows the last value of average fuel consumption from previous driving when the ignition switch is turned to the "ON" position or the engine switch is pressed to change the ignition mode to "ON". Unless you reset the value of average fuel consumption, the display indicates the value of average fuel consumption which includes average fuel consumption during previous driving.

To reset the average fuel consumption to zero, push and hold the indicator selector knob (2) for a while when the display shows the average fuel consumption.

NOTE:
When you reset the indication or reconnect the negative (–) terminal to the battery, the value of average fuel consumption will be shown after driving for a while.

(For "L/100km" or "km/L" setting)
To change the unit of average fuel consumption, while pushing and holding the trip meter selector knob (1), turn the indicator selector knob (2).

EXAMPLE

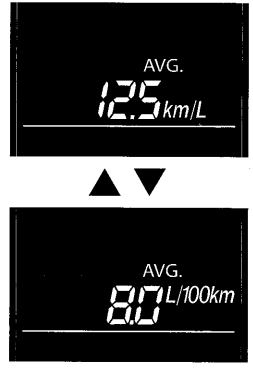

68LM262

NOTE:
Depending on the vehicle's specification, the fuel consumption units of initial setting are indicated as km/L or L/100km.

NOTE:
- *When you change the units that average fuel consumption is displayed in, the instantaneous fuel consumption units will be changed automatically.*
- *When you reconnect the negative (–) terminal to the battery, the unit of the average fuel consumption will be reinitialized. Change the unit again to your preference.*

Driving range
If you selected driving range the last time you drove the vehicle, the display indicates "---" for a few seconds and then indicates the current driving range when the ignition switch is turned to the "ON" position or the engine switch is pressed to change the ignition mode to "ON".

The driving range shown in the display is the approximate distance you can drive until the fuel gauge indicates "E", based on current driving conditions.

When the low fuel warning light comes on, the display "---" will appear.

If the low fuel warning light comes on, fill the fuel tank immediately regardless of the value of driving range shown in the display.

As the driving range after refueling is calculated based on the most recent driving condition, the value is different each time you refuel.

NOTE:
- *If you refuel when the ignition switch is in the "ON" position or the ignition mode is "ON", the driving range may not indicate the correct value.*
- *When you reconnect the negative (–) terminal to the battery, the value of driving range will be shown after driving for a while.*

Distance until the next changing engine oil (For Diesel Engine Model)
When you select "Distance until the next changing engine oil" of Information Display, the display indicates the remaining distance until the next timing of the engine oil and oil filter change.
When the remaining distance becomes 0 km, the oil change request light in the instrument cluster also starts blinking to alert that you should change the engine oil and oil filter immediately.
If you selected "Distance until the next changing engine oil" the last time you drove the vehicle, the display indicates "---" for a few seconds and then indicates the current distance until the next changing engine oil when the ignition switch is turned to the "ON" position or the engine switch is pressed to change the ignition mode to "ON".

Whenever the engine oil and oil filter are changed, the oil life monitoring must be reset in order to monitor the next oil and oil filter change timing properly. To reset the indicator, consult your SUZUKI Dealership. When the oil life monitoring is reset, the oil life monitoring indicates 30000 km. If the oil change request light was blinking, it will go out.

NOTICE

Change the engine oil and filter immediately when the remaining distance of the oil life monitoring indication becomes close to 0 km. If you keep operating the engine with 0 km indication of oil life monitoring, severe engine damage can result.

Odometer
When the ignition switch is in the "ON" position or the ignition mode is "ON", the display (D) shows the odometer.
The odometer records the total distance the vehicle has been driven.

NOTICE

Keep track of your odometer reading and check the maintenance schedule regularly for required services. Increased wear or damage to certain parts can result from failure to perform required services at the proper mileage intervals.

Clock

When the ignition switch is in the "ON" position or the ignition mode is "ON", the display (E) shows the time.

To change the time indication:

1) Push the trip meter selector knob (1) and the indicator selector knob (2) together.
2) To change the hour indication, turn the indicator selector knob (2) left or right repeatedly when the hour indication blinks. To change the hour indication quickly, turn and hold the indicator selector knob (2). To set the hour indication, push the indicator selector knob (2) and the minute indication will flash.
3) To change the minute indication, turn the indicator selector knob (2) left or right repeatedly when the minute indication blinks. To change the minute indication quickly, turn and hold the indicator selector knob (2). To set the minute indication, push the indicator selector knob (2).

⚠ WARNING

If you attempt to adjust the display while driving, you could lose control of the vehicle.

Do not attempt to adjust the display while driving.

NOTE:
When you reconnect the negative (–) terminal to the battery, the clock indication will be reinitialized. Change the indication again to your preference.

Lighting Control Lever

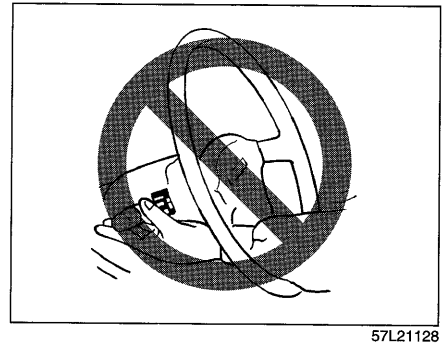

57L21128

⚠ WARNING

To avoid possible injury, do not operate controls by reaching through the steering wheel.

Lighting Operation

EXAMPLE

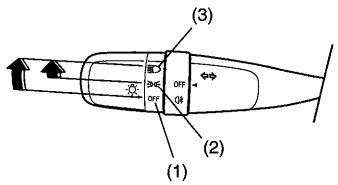

68LM228

To turn the lights on or off, twist the knob on the end of the lever. There are three positions:

OFF (1)
All lights are off.

(2)
Front position lights, tail lights, license plate light and instrument lights are on, but headlights are off.

(3)
Front position lights, tail lights, license plate light, instrument lights and headlights are on.

EXAMPLE

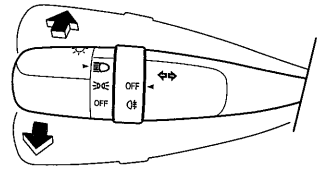

68LM229

With the headlights on, push the lever forward to switch to the high beams (main beams) or pull the lever toward you to switch to the low beams. When the high beams (main beams) are on, a light on the instrument panel will come on. To momentarily activate the high beams (main beams) as a passing signal, pull the lever slightly toward you and release it when you have completed the signal.

Automatic Lights Operation (if equipped)

EXAMPLE

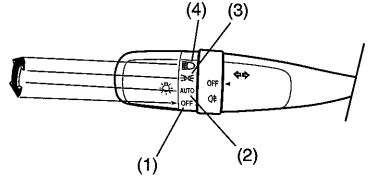

68LM230

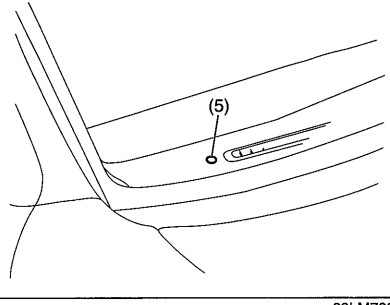

68LM70201

Your vehicle's lighting system is controlled by two main systems: the Lighting switch and the Auto-On Headlight System (when the lighting switch is in the "AUTO" position).
The two systems work together to operate your lights as shown in the following chart:
E/G: Engine
ON: Lights ON
LIGHT: When it is light around the light sensor (5).
DARK: When it is dark around the light sensor (5).

Lighting switch position	Main lights to be operated	Ignition mode "LOCK" (OFF) or "ACC"		Ignition mode "ON"			
		E/G OFF		E/G OFF		E/G RUNNING	
		LIGHT	DARK	LIGHT	DARK	LIGHT	DARK
(1) OFF	Position lights, Tail lights	–	–	–	–	–	–
	Headlights	–	–	–	–	–	–
(2) AUTO	Position lights, Tail lights	–	–	–	ON	–	ON
	Headlights	–	–	–	ON	–	ON
(3)	Position lights, Tail lights	ON	ON	ON	ON	ON	ON
	Headlights	–	–	–	–	–	–
(4)	Position lights, Tail lights	ON	ON	ON	ON	ON	ON
	Headlights	ON	ON	ON	ON	ON	ON

To turn the lights on or off, twist the knob on the end of the lever. There are four positions:

OFF (1)
All lights are off.

AUTO (2)
This function works when the ignition mode has been changed to "ON" by pressing the engine switch. The headlights and position lights are turned on and off automatically according to the amount of outside light detected by a sensor. They go out automatically when you change the ignition mode to "ACC" or "LOCK" by pressing the engine switch.
The light sensor (5) for sensing the amount of outside light is on the passenger's seat side Instrument panel.

NOTE:
- *Do not place anything on the light sensor. The sensor will not function properly if anything is placed on it.*
- *If you changed the ignition mode to "ON" by pressing the engine switch and the "AUTO" position remains selected, the headlights and position lights come on automatically as the outside gets dark even with the engine not running. Leaving the lights lit for a long time may lead to a completely discharged battery.*

(3)
Front position lights, tail lights, license plate light and instrument lights are on, but headlights are off.

(4)
Front position lights, tail lights, license plate light, instrument lights and headlights are on.

EXAMPLE

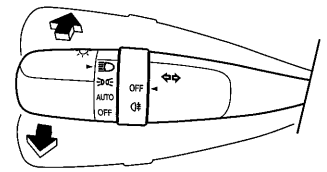

68LM231

With the headlights on, push the lever forward to switch to the high beams (main beams) or pull the lever toward you to switch to the low beams. When the high beams (main beams) are on, a light on the instrument panel will come on. To momentarily activate the high beams (main beams) as a passing signal, pull the lever slightly toward you and release it when you have completed the signal.

Auto-On Headlight System

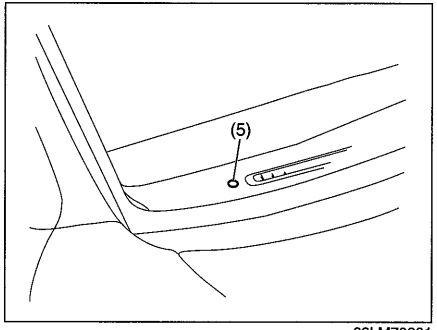

68LM70201

The Auto-on headlight system automatically turns on all lights that are operated by the lighting control lever on the steering column, when the following three conditions are all met.

Conditions for Auto-on headlight system operation:
1) It is dark around the light sensor (5).
2) The lighting control lever is in the "AUTO" position.
3) You press the engine switch to change the ignition mode to "ON".

This system is operated by a signal from the light sensor (5) on the front wind shield. Do not cover the sensor (5). If you do, the system will not work correctly.

⚠ WARNING

It takes about 5 seconds for the light sensor to react to a change in lighting conditions. To help avoid an accident due to reduced visibility, turn on your headlights before driving into a tunnel, parking structure or the like.

NOTE:
The light sensor reacts even to infrared rays, so it may operate incorrectly when there are strong infrared rays.

Light Reminder Buzzer

The interior buzzer continuously beeps if you open the driver's door without turning off the headlights and position lights. This function is triggered under the following condition:
The headlights and/or position lights are on even after the ignition switch is turned off, or the engine switch is pressed to change the ignition mode to "LOCK" (OFF).

The buzzer stops sounding when you turn off the headlights and position lights.

Daytime Running Light (D.R.L.) System (if equipped)

When the engine is running. The daytime running lights turn on. But this control is canceled when the light control lever is turned to any position other than "OFF".

Conditions for D.R.L. system operation
1) The engine is running.
2) All lights are off.

Rear Fog Light Switch

EXAMPLE

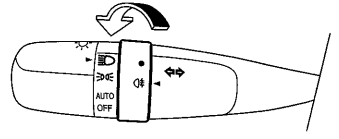

68LM232

To turn the rear fog light on, twist the knob as shown in the illustration with the headlights are on. When the rear fog light is on, an indicator light on the instrument cluster will come on.

Front Fog Light Switch (if equipped)

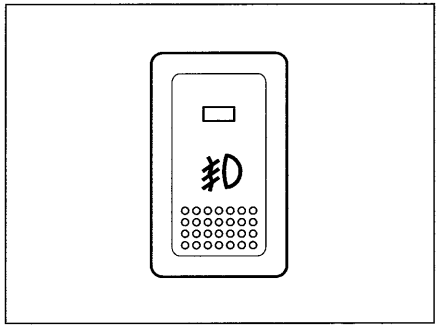

64J058

The front fog light comes on when the fog light switch is pushed in with the position lights, tail lights and/or the headlights are on. An indicator light above the switch will be lit when the front fog light is on.

NOTE:
In some countries the lighting operation may be different from the above description according to local regulations.

Headlight Leveling Switch (if equipped)

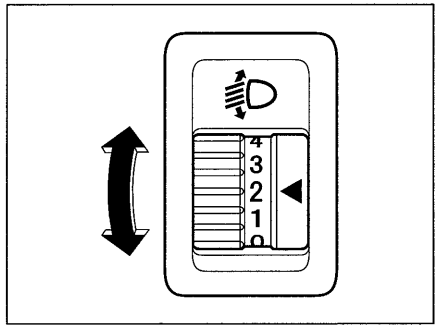

80JM040

Level the headlight beam according to the load condition of your vehicle by turning this switch. The chart below shows the appropriate switch position for different vehicle-load conditions.

Vehicle Load Condition	Switch Position
Driver only	0
Driver + 1 passenger (in front seat)	0
Driver + 4 passengers, no cargo	2
Driver + 4 passengers, cargo added	2
Driver + full cargo	3

Headlight Washer Switch (if equipped)

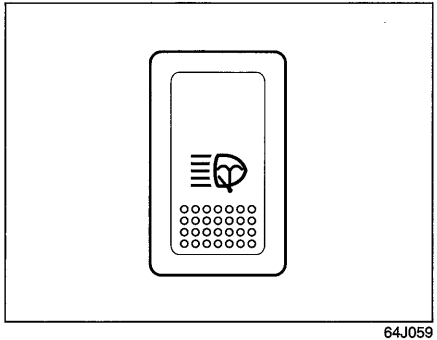

64J059

With the ignition switch in the "ON" position and the headlights are on, push the headlight washer switch to wash the headlight lenses. Washer fluid is sprayed for half a second. If necessary, push the switch again.

Turn Signal Control Lever

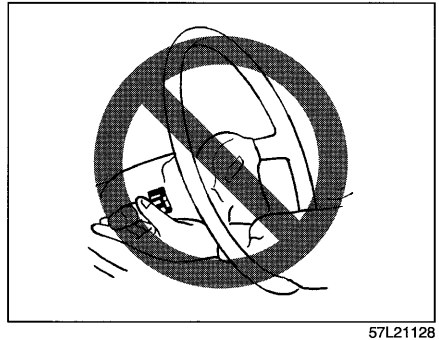

57L21128

⚠ WARNING

To avoid possible injury, do not operate controls by reaching through the steering wheel.

Turn Signal Operation

With the ignition switch in the "ON" position or the ignition mode "ON", move the lever up or down to activate the right or left turn signals.

Normal turn signal

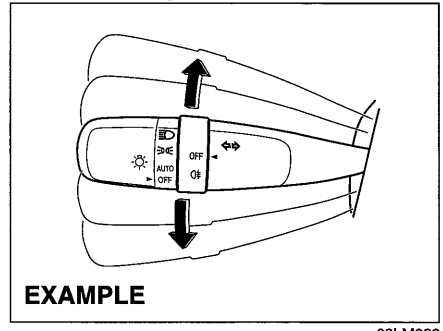

EXAMPLE

68LM233

Move the lever all the way upward or downward to signal. When the turn is completed, the signal will cancel and the lever will return to its normal position.

Lane change signal

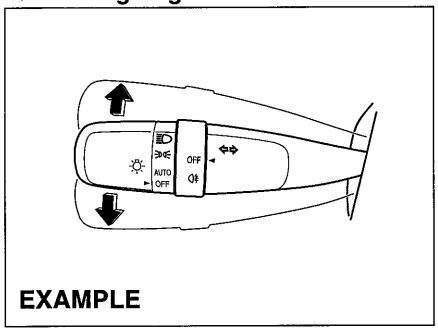

68LM234

Some times, such as when changing lanes, the steering wheel is not turned far enough to cancel the turn signal. For convenience, you can flash the turn signal by moving the lever part way and holding it there. The lever will return to its normal position when you release it.

Hazard Warning Switch

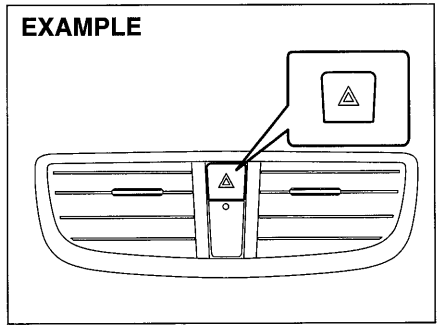

68LM235

Push in the hazard warning switch to activate the hazard warning lights. All turn signal lights and both turn signal indicators will flash simultaneously. To turn off the lights, push the switch again.
Use the hazard warning lights to warn other traffic during emergency parking or when your vehicle could otherwise become a traffic hazard.

Windshield Wiper and Washer Lever

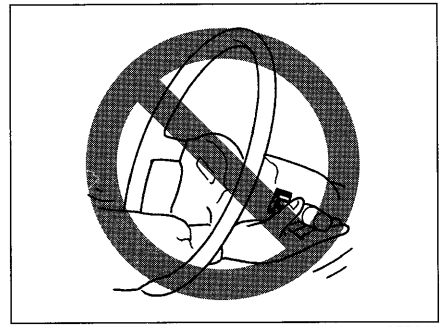

65D611

⚠ WARNING

To avoid possible injury, do not operate controls by reaching through the steering wheel.

Wiper and Washer Operation

When the ignition switch is in the "ON" position or the ignition mode is "ON", you can use the wiper/washer lever or switch (if equipped).

Windshield Wipers

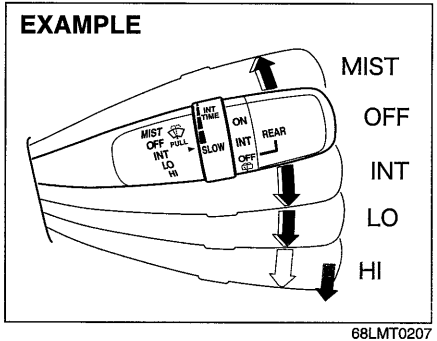

68LMT0207

To turn the windshield wipers on, move the lever down to one of the three operating positions. In the "INT" position, the wipers operate intermittently. The "INT" position is very convenient for driving in mist or light rain. In the "LO" position, the wipers operate at a steady low speed. In the "HI" position, the wipers operate at a steady high speed. To turn off the wipers, move the lever back to the "OFF" position.

Move the lever up and hold it to the "MIST" position, the windshield wipers will turn on continuously at low speed.

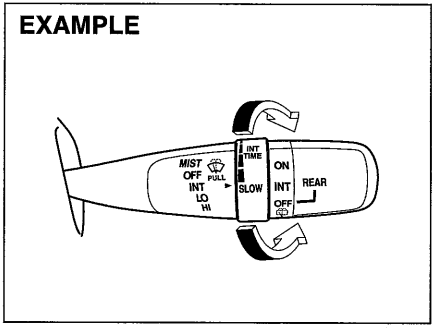

68LM237

If the lever is equipped with the "INT TIME" control, turn the control forward or rearward to adjust the intermittent wiper operation to the desired interval.

Windshield Washer

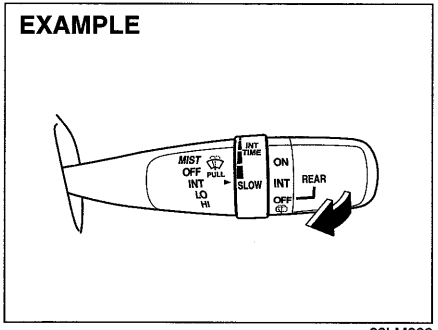

68LM238

To spray windshield washer fluid, pull the lever toward you. The windshield wipers will automatically turn on at low speed if they are not already on and the "INT" position is equipped.

⚠ WARNING

- **To prevent windshield icing in cold weather, turn on the defroster to heat the windshield before and during windshield washer use.**
- **Do not use radiator antifreeze in the windshield washer reservoir. It can severely impair visibility when sprayed on the windshield, and can also damage your vehicle's paint.**

NOTICE

To help prevent damage to the windshield wiper and washer system components, you should take the following precautions:

- **Do not continue to hold in the lever when there is no windshield washer fluid being sprayed or the washer motor can be damaged.**
- **Do not attempt to remove dirt from a dry windshield with the wipers or you can damage the windshield and the wiper blades. Always wet the windshield with washer fluid before operating the wipers.**
- **Clear ice or packed snow from the wiper blades before using the wipers.**
- **Check the washer fluid level regularly. Check it often when the weather is bad.**
- **Only fill the washer fluid reservoir 3/4 full during cold weather to allow room for expansion if the temperature falls low enough to freeze the solution.**

Rear Window Wiper/Washer Switch

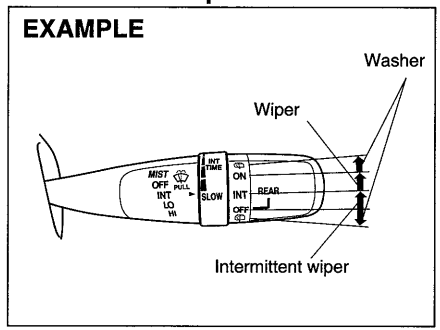

68LM239

To turn the rear wiper on, twist the rear wiper switch on the end of the lever forward to the "ON" position. If your vehicle is equipped the "INT" position, the rear wiper operates intermittently when you twist the switch forward to the "INT" position. To turn the rear wiper off, twist the switch rearward to the "OFF" position.

With the rear wiper in the "OFF" position, twist the switch rearward and hold it there to spray window washer fluid.

With the rear wiper in the "ON" position, turn the switch forward and hold it there to spray window washer fluid.

NOTICE

Clear ice or snow from the rear window and rear wiper blade before using the rear wiper. Accumulated ice or snow could prevent the wiper blade from moving, causing damage to the wiper motor.

Tilt/Telescoping (if equipped) Steering Lock Lever

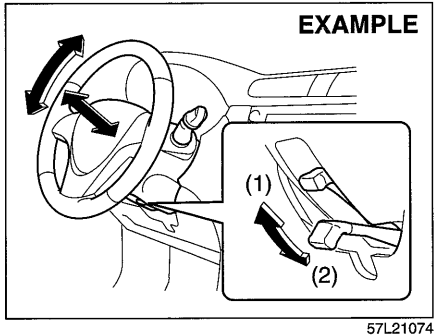

57L21074

(1) LOCK
(2) UNLOCK

The lock lever is located under the steering column. To adjust the steering wheel height and fore-aft position:

1) Push down the lock lever to unlock the steering column.
2) Adjust the steering wheel to the desired height and fore-aft position and lock the steering column by pulling up the lock lever.
3) Try moving the steering wheel up and down and back and forth to make sure it is securely locked in position.

⚠ WARNING

Never attempt to adjust the steering wheel while the vehicle is moving or you could lose control of the vehicle.

Horn

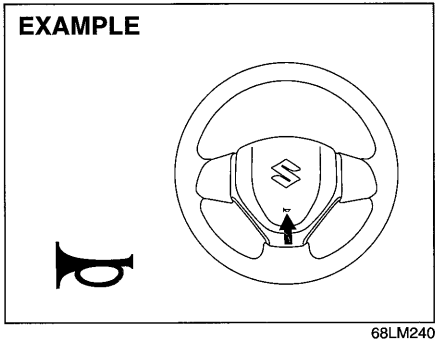

68LM240

Press the horn button of the steering wheel to sound the horn. The horn will sound with the ignition switch in any position or any ignition mode.

Heated Rear Window and Heated Outside Rearview Mirrors (if equipped) Switch

Type 1

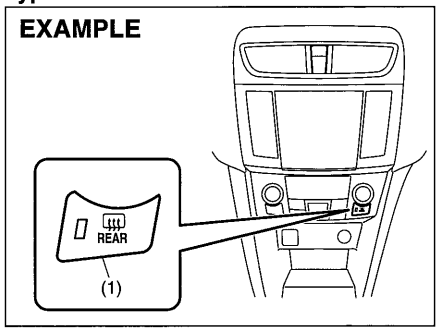

68LM241

Type 2

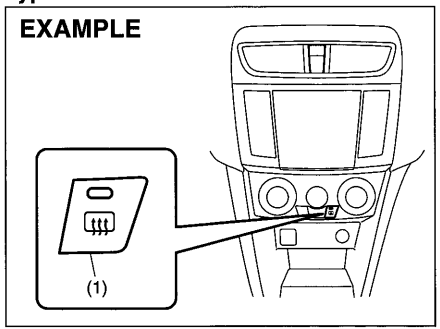

68LM242

When the rear window is misted, push this switch (1) to clear the window.

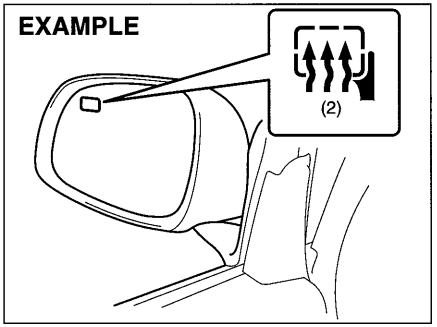

68LM243

If the outside rearview mirror has the mark (2), it is also equipped with the heated outside rearview mirrors. When you push the switch (1), both the heated outside rearview mirrors and the heated rear window will operate simultaneously.

An indicator light will be lit when the defogger is on. The defogger will work only when the engine is running. To turn off the defogger, push the switch (1) again.

NOTICE

The heated rear window and the heated outside rearview mirrors (if equipped) use a large amount of electricity. Be sure to turn off after the window and mirrors have become clear.

NOTE:

- *The defogger will work only when the engine is running.*
- *The defogger will automatically turn off after the defogger remains on for 15 minutes to prevent discharging of the battery.*

MEMO

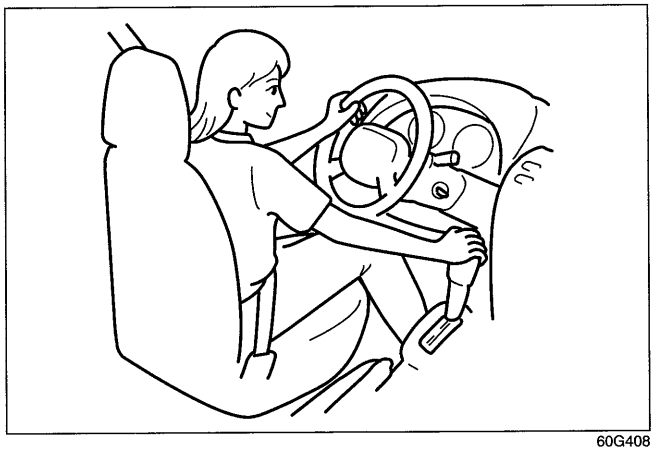

60G408

OPERATING YOUR VEHICLE

Exhaust Gas Warning 3-1
Daily Inspection Checklist 3-1
Engine Oil Consumption 3-2
Ignition Switch
(Vehicle without Keyless Push Start System) 3-3
Engine Switch
(Vehicle with Keyless Push Start System) 3-5
Keyless Push Start System 3-6
Parking Brake Lever 3-9
Pedal 3-11
Starting the Engine
(Vehicle without Keyless Push Start System) 3-12
Starting the Engine
(Vehicle with Keyless Push Start System) 3-13
Using the Transaxle 3-18
ENG A-STOP System (Engine Auto Stop Start System)
(if equipped) 3-23
Cruise Control (if equipped) 3-25
Braking 3-28
Electronic Stability Program (ESP®) 3-30

Exhaust Gas Warning

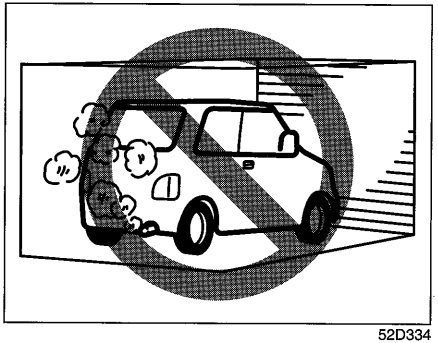

52D334

⚠ WARNING

Avoid breathing exhaust gases. Exhaust gases contain carbon monoxide, a potentially lethal gas that is colorless and odorless. Since carbon monoxide is difficult to detect by itself, be sure to take the following precautions to help prevent carbon monoxide from entering your vehicle.

- **Do not leave the engine running in garages or other confined areas.**

(Continued)

⚠ WARNING

(Continued)

- **Do not park with the engine running for a long period of time, even in an open area. If it is necessary to sit for a short time in a parked vehicle with the engine running, make sure the air intake selector is set to "FRESH AIR" and the blower is at high speed.**
- **Avoid operating the vehicle with the tailgate or trunk open. If it is necessary to operate the vehicle with the tailgate or trunk open, make sure the sunroof (if equipped) and all windows are closed, and the blower is at high speed with the air intake selector set to "FRESH AIR".**
- **To allow proper operation of your vehicle's ventilation system, keep the air inlet grille in front of the windshield clear of snow, leaves or other obstructions at all times.**
- **Keep the exhaust tailpipe area clear of snow and other material to help reduce the buildup of exhaust gases under the vehicle. This is particularly important when parked in blizzard conditions.**
- **Have the exhaust system inspected periodically for damage and leaks. Any damage or leaks should be repaired immediately.**

Daily Inspection Checklist

Before Driving

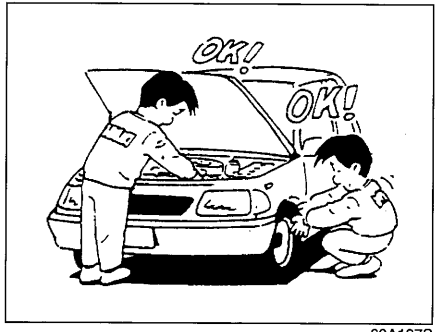

60A187S

1) Make sure that windows, mirrors, lights and reflectors are clean and unobstructed.
2) Visually check the tires for the following points:
   - the depth of the tread groove
   - abnormal wear, cracks and damage
   - loose wheel bolts
   - existence of foreign material such as nails, stones, etc.

Refer to "Tires" in "INSPECTION AND MAINTENANCE" section for details.

3) Look for fluid and oil leaks.

NOTE:
It is normal for water to drip from the air conditioning system after use.

4) Make sure the hood is fully closed and latched.
5) Check the headlights, turn signal lights, brake lights and horn for proper operation.
6) Adjust the seat and head restraint.
7) Check the brake pedal and the parking brake lever.
8) Adjust the mirrors.
9) Make sure that you and all passengers have properly fastened your seat belts.
10) Make sure that all warning lights come on as the key is turned to the "ON" position or the engine switch is pressed to change the ignition mode to "ON".
11) Check all gauges.
12) Make sure that the BRAKE SYSTEM WARNING light turns off when the parking brake is released.

Once a week, or each time you fill your fuel tank, perform the following under-hood checks:

1) Engine oil level
2) Coolant level
3) Brake fluid level
4) Battery solution level
5) Windshield washer fluid level
6) Hood latch operation
   Pull the hood release handle inside the vehicle. Make sure that you cannot open the hood all the way without releasing the secondary latch. Be sure to close the hood securely after checking for proper latch operation. See the item "All latches, hinges and locks" of "CHASSIS AND BODY" in the "Periodic Maintenance Schedule" in the "INSPECTION AND MAINTENANCE" section for lubrication schedule.

⚠ WARNING

Make sure the hood is fully closed and latched before driving. If it is not, it can fly up unexpectedly during driving, obstructing your view and resulting in an accident.

Once a month, or each time you fill your fuel tank, check the tire pressure using a tire pressure gauge. Also check the tire pressure of the spare tire.

Engine Oil Consumption

It is normal for the engine to consume some engine oil during normal vehicle operation.

The amount of engine oil consumed depends on the viscosity of the oil, the quality of the oil and the conditions the vehicle is driven under.
More oil is consumed during high-speed driving and when there is frequent acceleration and deceleration. Under high loads, your engine also will consume more oil.
A new engine also consumes more oil, since its pistons, piston rings and cylinder walls have not yet become conditioned. New engines reach the normal level of oil consumption only after approximately 5000 km (3000 miles) driving.

Oil consumption:
Max. 1.0 L per 1000 km
(1 Qt. per 600 miles)

When judging the amount of oil consumption, note that the oil may become diluted and make it difficult to accurately judge the true oil level.
As an example, if a vehicle is used for repeated short trips, and consumes a normal amount of oil, the dipstick may not show any drop in the oil level at all, even after 1000 km (600 miles) or more of driving. This is because the oil is gradually becoming diluted with fuel or moisture,

making it appear that the oil level has not changed.
You should also be aware that the diluting ingredients evaporate out when the vehicle is subsequently driven at high speeds, such as on an expressway, making it appear that oil is excessively consumed after high-speed driving.

Ignition Switch (Vehicle without Keyless Push Start System)

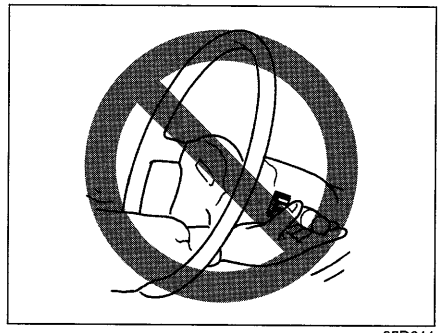

65D611

⚠ WARNING

To avoid possible injury, do not operate controls by reaching through the steering wheel.

EXAMPLE

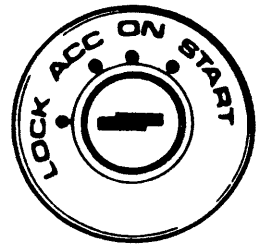

60B041

The ignition switch has the following four positions:

LOCK
This is the normal parking position. It is the only position in which the key can be removed.

Manual transaxle

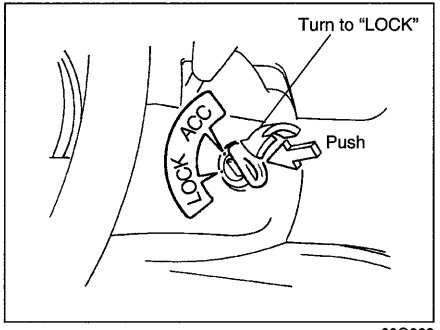

60G033

- **Manual transaxle vehicles**
  You must push in the key to turn it to the "LOCK" position. It locks the ignition, and prevents normal use of the steering wheel after the key is removed.
- **Automatic transaxle vehicles**
  The gearshift lever must be in the "P" (Park) position to turn the key to the "LOCK" position. It locks the ignition and prevents normal use of the steering wheel and gearshift lever.

To release the steering lock, insert the key and turn it clockwise to one of the other positions. If you have trouble turning the key to unlock the steering, try turning the steering wheel slightly to the right or left while turning the key.

ACC
Accessories such as the radio can operate, but the engine is off.

ON
This is the normal operating position. All electrical systems are on.

START
This is the position for starting the engine using the starter motor. The key should be released from this position as soon as the engine starts.

Ignition key reminder (if equipped)
A buzzer sounds intermittently to remind you to remove the ignition key if it is in the ignition switch when the driver's door is opened.

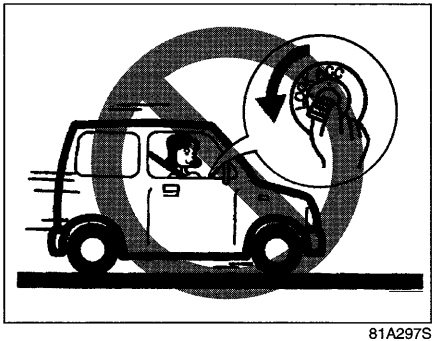

81A297S

⚠ WARNING

- **Never return the ignition switch to the "LOCK" position and remove the ignition key while the vehicle is moving. The steering wheel will lock and you will not be able to steer the vehicle.**

(Continued)

⚠ WARNING

(Continued)

- **Always return the ignition switch to the "LOCK" position and remove the ignition key when leaving the vehicle even if only for a short time. Also do not leave children alone in a parked vehicle. Unattended children could cause accidental movement of the vehicle or could tamper with power windows or power sunroof. They also could suffer from heat stroke in warm or hot weather. These could result in severe injury or even death.**

NOTICE

- **Do not use the starter motor for more than 15 seconds at a time. If the engine does not start, wait 15 seconds before trying again. If the engine does not start after several attempts, check the fuel and ignition systems or consult your SUZUKI dealer.**
- **Do not leave the ignition switch in the "ON" position if the engine is not running as the battery will discharge.**

Engine Switch (Vehicle with Keyless Push Start System)

EXAMPLE

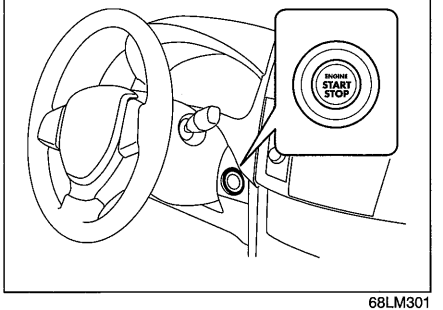

68LM301

LOCK (OFF)

This is the mode for parking. When this mode is selected by pressing the engine switch and you open or close any of the doors (including the tailgate), the steering will be automatically locked.

ACC

Press the engine switch to select this ignition mode to use such electric equipment as the audio system, outside rearview mirrors and accessory socket with the engine off. When this position is selected, the "ACC" indicator light in the instrument cluster comes on. Refer to "Warning and Indicator Lights" in the "BEFORE DRIVING" section for details.

ON

- **With the engine off**
  You can use such electric equipment as the power windows and wipers with the engine off. When this ignition mode is selected by pressing the engine switch, the Ignition "ON" indicator light in the instrument cluster will come on.
- **With the engine on**
  All electric equipment is operational. The vehicle can be driven when you have selected this ignition mode by pressing the engine switch.

START

Automatic transaxle – Provided you have the keyless push start system remote controller with you, the engine automatically starts when you press the engine switch to select this ignition mode after placing the gearshift lever in the "P" position and depressing the brake pedal. (If you need to re-start the engine while the vehicle is moving, shift into "N".)

Manual transaxle – Provided you have the keyless push start system remote controller with you, the engine automatically starts when you press the engine switch to select this ignition mode after shifting to "N" (Neutral) and depressing the brake and clutch pedals.

NOTE:
You do not need to keep the engine switch pressed to start the engine.

NOTICE
Do not leave the engine switch in the "ACC" or "ON" mode when the engine is not running. Avoid using the radio or other electric accessories for a long time when the engine switch is in the "ACC" or "ON" mode when the engine is not running, otherwise the battery may discharge.

NOTE:
- *The steering lock may not be released if some load is acting on the steering wheel. If this happens, turn the steering wheel to the right or left to relieve it from the load before you press the engine switch again to change to the desired ignition mode.*
- *In the presence of strong radio signals or noise, you may not be able to change the ignition mode to "ACC" or "ON" or to start the engine using the engine switch.*

Keyless Push Start System

Provided the keyless push start system remote controller is within the "interior workable area" (Refer to the related explanation in this section), you can use the engine switch for starting the engine and selecting an ignition mode ("ACC" or "ON"). In addition, the following functions can be used:

- Keyless entry function. Refer to "Keyless Push Start System Remote Controller" in the "BEFORE DRIVING" section for details.
- Locking and unlocking doors (including the tailgate) using a request switch. Refer to "Keyless Push Start System Remote Controller" in the "BEFORE DRIVING" section for details.
- Immobilizer (anti-theft) function. Refer to "Immobilizer System" in the "BEFORE DRIVING" section for details.

Engine Switch Illumination

The engine switch is illuminated (lit) in the following situations:
- The driver's door is open (only when the engine is not in operation).
- For 15 seconds after the driver's door is closed (only when the engine is not in operation).
- The position lights are on.

The illumination will fade out when it is not required.

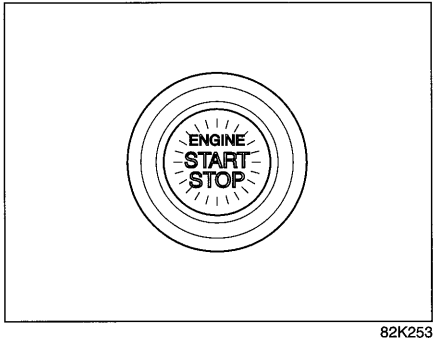

82K253

NOTE:
To save the battery, the illumination will be automatically turned off when both of the following conditions are simultaneously met (battery saver function):
- *The headlights and position lights are turned off.*
- *A period of 15 minutes has elapsed after opening the driver's door.*

Selection of Ignition Modes

Press the engine switch to select the "ACC" or "ON" mode as follows when you use an electric accessory or check the operation of instruments without running the engine.

1) Bring the keyless push start system remote controller with you and sit in the driver's seat.
2) Manual transaxle – Without depressing the clutch pedal, press the engine switch (1).
   Automatic transaxle – Without depressing the brake pedal, press the engine switch (1).

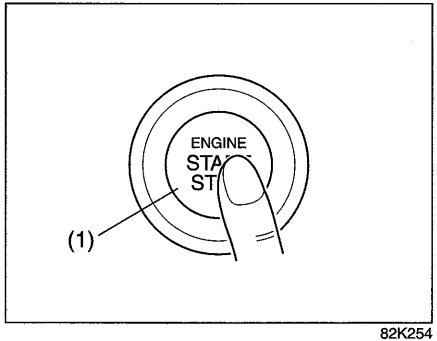

82K254

Every time you press the engine switch, the ignition mode changes as follows.

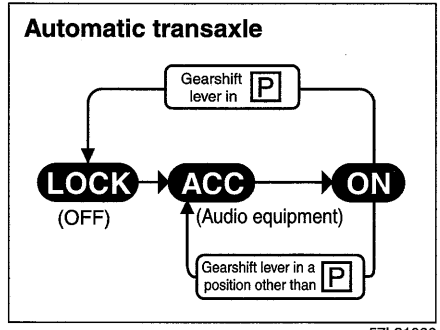

57L31006

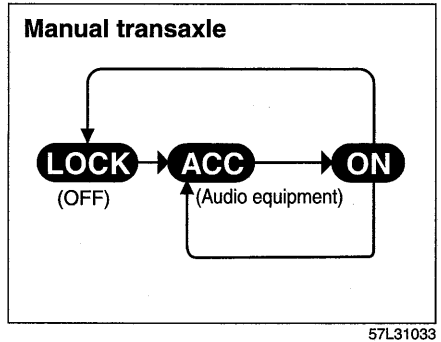

57L31033

NOTE:
Automatic transaxle – If the gearshift lever is in any position other than "P", or if the knob button is pushed when the gearshift lever is in "P" position the ignition mode cannot be returned to "LOCK" (OFF).

If the "PUSH" indicator light blinks and the ignition modes cannot be selected

Your keyless push start system remote controller may not be sensed as being within the "interior workable area" (Refer to the related explanation in this section). Try again after making sure you have the remote controller with you. If the ignition modes still cannot be selected, the battery of the remote controller may be discharged. To be able to select an ignition mode, you must then use the following method:

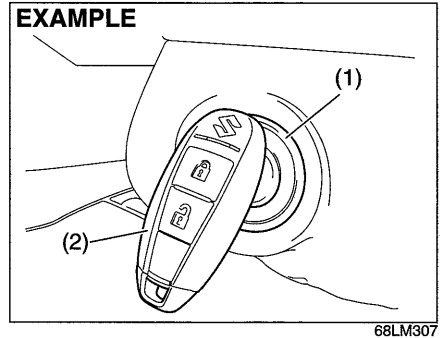

68LM307

1) Manual transaxle – Without depressing the clutch pedal, push the engine switch (1).
   Automatic transaxle – Without depressing the brake pedal, push the engine switch (1).
2) Within about 10 seconds during which the "PUSH" indicator light in the instrument cluster is blinking, touch the

engine switch with the lock switch end of the remote controller (2) for about 2 seconds.

NOTE:
- *If you still cannot select the ignition modes, there may be some problem with the keyless push start system. Contact an authorized SUZUKI dealer for an inspection of the system.*
- *The immobilizer/keyless push start system warning light come on for about 5 seconds while the "PUSH" indicator light is blinking. Refer to "Warning and Indicator Lights" in the "BEFORE DRIVING" section for details.*
- *You may customize the system to cause the interior buzzer to sound once for the "remote controller out of sensing range" warning. To incorporate this customization, please contact an authorized SUZUKI dealer.*
- *If the battery of the remote controller is about to become completely discharged, the keyless push start system remote controller battery consumption warning light in the instrument cluster will come on for a few seconds when you press the engine switch to change the ignition mode to "ON". Refer to "Warning and Indicator Lights" in the "BEFORE DRIVING" section for details. For details on replacing the battery, refer to the "Keyless Push Start System Remote Controller" in the "BEFORE DRIVING" section.*

"Remote Controller Outside" Warning

When the conditions described below are met, the system gives a "remote controller outside" warning by sounding the interior and exterior buzzers and blinking the immobilizer/keyless push start system warning light.

- The remote controller is not inside the vehicle when any of the doors is opened when the engine is running or when the engine switch is pressed to change the ignition mode to "ACC" or "ON" and then all doors are closed.
- The remote controller is not inside the vehicle when you attempt to start the engine after changing the ignition mode to "ACC" or "ON" by pressing the engine switch.

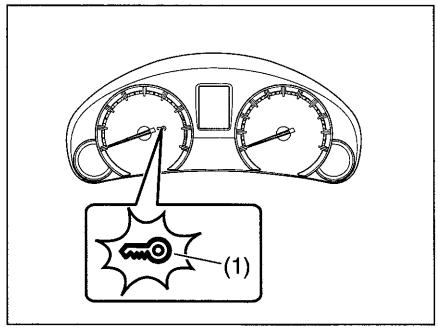

68LM308

(1) Immobilizer/keyless push start system warning light (blinking)

NOTE:
- *If the warning is given, locate the remote controller as soon as possible.*
- *Any attempt to start the engine will fail while the warning is active. Blinking of the immobilizer/keyless push start system warning light in the instrument cluster will indicate this condition. Refer to "Warning and Indicator Lights" in the "BEFORE DRIVING" section for details.*
- *Blinking of the immobilizer/keyless push start system warning light should stop shortly after the remote controller is brought back inside the vehicle. If they do not stop blinking, change the ignition mode to "LOCK" (OFF) by pressing the engine switch and then perform the engine starting operation.*
- *Always keep the remote controller with you as the driver.*

Interior Workable Area for Engine Starting, Ignition Mode Selection and "Remote Controller Outside" Warning

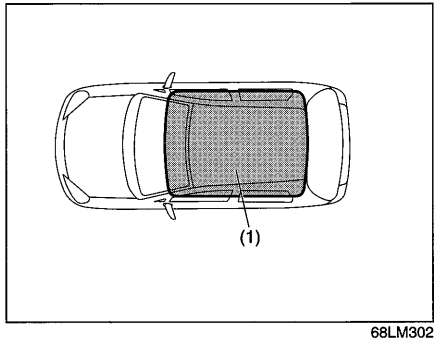

68LM302

(1) Interior workable area

The "interior workable area" for these functions is defined as all the interior spaces except for the space above the instrument panel.

NOTE:

- *Even when the remote controller is in the "interior workable area", if it is in any of the following conditions, you may not be able to start the engine or select the ignition modes, and the "remote controller outside" warning may be given.*
  - *The remote controller's battery is low.*
  - *The remote controller is affected by strong radio signals or noise.*
  - *The remote controller is in contact with or covered by a metallic object.*
  - *The remote controller is in stowage like the glove box or a door pocket.*
  - *The remote controller is in the sun visor pocket or on the floor.*
- *Even when the remote controller is outside the "interior workable area", if it is in any of the following conditions, you may be able to start the engine or select the ignition mode. The "remote controller outside" warning may not be given at that time.*
  - *The remote controller is outside the vehicle but very close to a door.*
  - *The remote controller is on the instrument panel.*

Parking Brake Lever

EXAMPLE

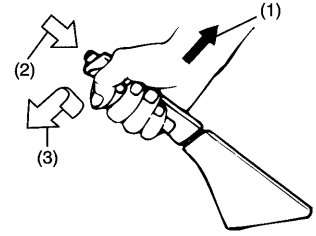

54G039

(1) To set
(2) To release
(3) To release

The parking brake lever is located between the seats. To set the parking brake, hold the brake pedal down and pull the parking brake lever all the way up. To release the parking brake, hold the brake pedal down, pull up slightly on the parking brake lever, push the button on the end of the lever with your thumb, and lower the lever to its original position.

For automatic transaxle vehicles, always set the parking brake before moving the gearshift lever to the "P" (PARK) position. If you park on an incline and shift into "P" before setting the parking brake, the weight of the vehicle may make it difficult to shift out of "P" when you are ready to drive the vehicle.

When preparing to drive the vehicle, move the gearshift lever out of the "P" position before releasing the parking brake.

⚠ WARNING

- **Never drive your vehicle with the parking brake on: rear brake effectiveness can be reduced from overheating, brake life may be shortened, or permanent brake damage may result.**
- **If the parking brake does not hold the vehicle securely or does not fully release, have your vehicle inspected immediately by an authorized SUZUKI dealer.**

⚠ WARNING

Always set the parking brake fully before leaving your vehicle or it may move, causing injury or damage. When parking, make sure the gearshift lever for manual transaxle vehicles is in 1st gear or "R" (Reverse) and the gearshift lever for automatic transaxle vehicles is in "P" (Park). Remember, even though the transaxle is in gear or in Park, you must set the parking brake fully.

⚠ WARNING

When parking the vehicle in extremely cold weather, the following procedure should be used:

1) **Set the parking brake.**
2) **Manual transaxle - turn off the engine, then shift into reverse or first gear.**
   Automatic transaxle - shift into "P" (Park) and turn off the engine.
3) **Get out of the vehicle and put chocks under the wheels.**
4) **Release the parking brake.**
   When you return to your vehicle, you must remember to first set the parking brake, then remove the wheel chocks.

Parking Brake Reminder Buzzer

A buzzer sounds intermittently to remind you to release the parking brake if you start the vehicle without releasing the parking brake. Make sure that the parking brake is fully released and the brake system warning light turns off.

Pedal

Manual transaxle

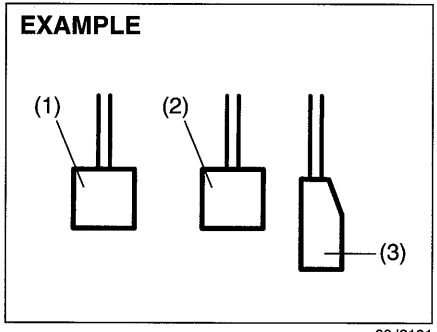

80J2121

Automatic transaxle

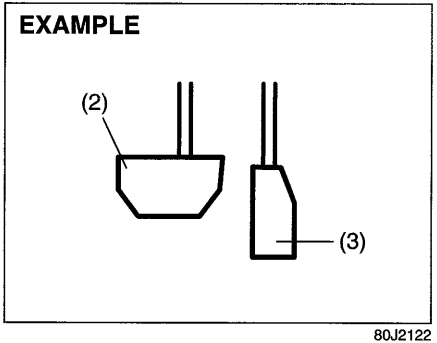

80J2122

Clutch Pedal (1)

(For manual transaxle)

The clutch pedal is used to disengage the drive to the wheels when starting the engine, stopping, or shifting the gearshift lever. Depressing the pedal disengages the clutch.

⚠ WARNING

Do not drive with your foot resting on the clutch pedal. It could result in excessive clutch wear, clutch damage, or unexpected loss of engine braking.

Brake Pedal (2)

Your SUZUKI vehicle is equipped with either front and rear disc brakes or front disc brakes and rear drum brakes. Depressing the brake pedal applies both sets of brakes.

You may hear occasional brake squeal when you apply the brakes. This is a normal condition caused by environmental factors such as cold, wet, snow, etc.

⚠ WARNING

If brake squeal is excessive and occurs each time the brakes are applied, you should have the brakes checked by your SUZUKI dealer.

⚠ WARNING

Do not "ride" the brakes by applying them continuously or resting your foot on the pedal. This will result in overheating of the brakes which could cause unpredictable braking action, longer stopping distances, or permanent brake damage.

Accelerator Pedal (3)

This pedal controls the speed of the engine. Depressing the accelerator pedal increases power output and speed.

Starting the Engine (Vehicle without Keyless Push Start System)

Before Starting the Engine

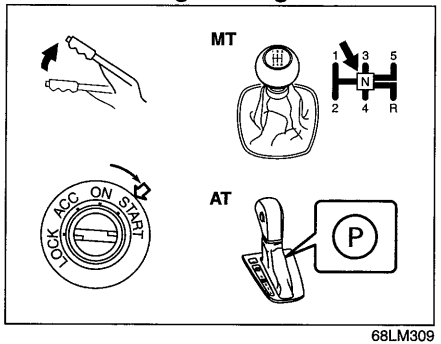

68LM309

1) Make sure the parking brake is set fully.
2) Manual transaxle – Shift into "N" (Neutral) and depress the clutch pedal all the way to the floor. Hold the clutch pedal while starting the engine.
   Automatic transaxle – If the gearshift lever is not in "P" (Park) position, shift into "P" (Park). (If you need to re-start the engine while the vehicle is moving, shift into "N".)

NOTE:
Automatic transaxle vehicles have a starter interlock device which is designed to keep the starter from operating if the transaxle is in any of the drive positions.

⚠ WARNING

Make sure that the parking brake is set fully and the transaxle is in Neutral (or Park for vehicles with an automatic transaxle) before attempting to start the engine.

Starting a Cold and Warm Engine (For Gasoline Engine Model)

With your foot off the accelerator pedal, crank the engine by turning the ignition key to "START". Release the key when the engine starts.

NOTICE

- **Stop turning the starter immediately after the engine has started or the starter system can be damaged.**
- **Do not crank the engine for more than 15 seconds at a time. If the engine doesn't start on the first try, wait about 15 seconds before trying again.**

If the engine does not start after 15 seconds of cranking, wait about 15 seconds, then press down the accelerator pedal to 1/3 of its travel and try cranking the engine again. Release the key and accelerator pedal when the engine starts.

If the engine still does not start, try holding the accelerator pedal all the way to the floor while cranking. This should clear the engine if it is flooded.

(For Diesel Engine Model)

Cold engine
Turn the ignition switch to the "ON" position and wait until the glow plug indicator goes out if it comes on. Crank the engine by turning the ignition key to "START". Release the key when the engine starts.

> ***NOTICE***
>
> - **Stop turning the starter immediately after the engine has started or the starter system can be damaged.**
> - **Do not crank the engine for more than 15 seconds at a time. If the engine doesn't start on the first try, wait about 15 seconds before trying again.**

Warm engine
Crank the engine by turning the ignition key to "START". Release the key when the engine starts.

Caution when stopping the engine with turbocharger
When stopping the engine after climbing or high speed driving, let the engine idle for about one minute or more (if it is not prohibited) to cool down the turbocharger and engine oil. This is to prevent the engine oil from over-deteriorating. Deteriorated engine oil will damage the bearings of the turbocharger.

Restarting diesel engine after fuel-empty stop
The engine stops and the malfunction indicator light comes on if the engine feels fuel emptiness. To restart the engine, stop the vehicles, hold the ignition key in "ON" position for 5–10 seconds to feed fuel, then perform above engine starting procedure. Have the indicator light turned off by your SUZUKI dealer.

Starting the Engine (Vehicle with Keyless Push Start System)

Before Starting the Engine

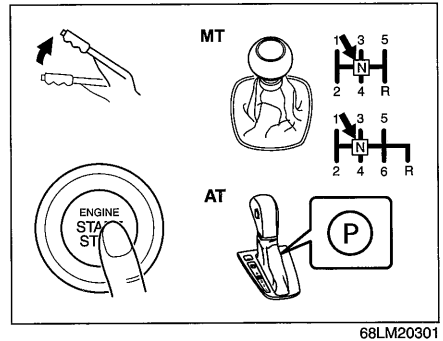

68LM20301

1) Make sure the parking brake is set fully.
2) Manual transaxle – Shift to "N" (Neutral) and fully depress the clutch pedal. Hold the clutch and brake pedals fully depressed.
   Automatic transaxle – If the gearshift lever is not in the "P" (Park) position, shift it to "P". Hold the brake pedal fully depressed.

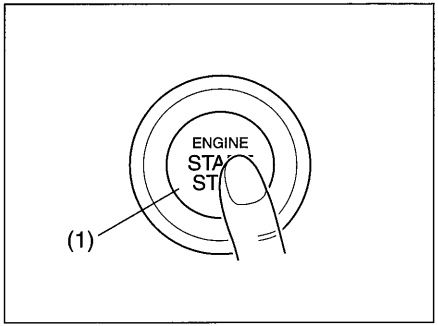

82K254

3) The "PUSH" indicator light in the instrument cluster will come on. Push the engine switch (1). When the engine is started, the starter motor will automatically stop.

⚠ WARNING

Make sure that the parking brake is set fully and the transaxle is in Neutral (or Park for vehicles with an automatic transaxle) before attempting to start the engine.

NOTICE

- **Do not depress the accelerator during the engine starting procedure.**
- **If the engine does not respond when you try to start it with the engine switch or if the engine switch repeats cycling through the "OFF" - "ACC" - "ON" mode, the vehicle battery may be discharged. Check the voltage of the vehicle battery before trying again.**

NOTE:
- *You do not need to keep the engine switch pressed to start the engine.*
- *The engine of a manual transaxle vehicle will not start unless the clutch pedal is depressed.*
- *Automatic transaxle vehicles have a starter interlock device which is designed to keep the starter from operating if the transaxle is in any of the drive positions.*
- *You should turn off such loads as the headlights and air conditioning system to facilitate starting of the engine.*
- *Even if you fail to start the engine, the starter motor will stop turning automatically after a short time. After the starter motor has stopped or if there is some problem with the system, the starter motor will rotate only while the engine switch is being pressed.*

Stopping the engine

- Depress the engine switch to stop the engine after the vehicle stopped completely.
- In case of emergency, you can stop the engine by depressing the engine switch 3 times or holding in more than 2 seconds while the vehicle in motion.

NOTE:
Except in emergency, do not stop the engine while the vehicle in motion.
The steering and braking operation will require more efforts when the engine stopped.
Refer to "Braking" in the "OPERATING YOUR VEHICLE" section.

NOTICE

If you stop the engine while the vehicle is in motion, the automatic transaxle may be damaged.
Avoid stopping the engine while driving.

- If the engine has been stopped and stayed as it as for while after the engine was stopped unexpectedly or was raced before stopped, a clicking sound may be heard from around the engine when engine restarted. This is not a malfunction. In this case, always let the engine idle before stop it.

Starting a Cold and Warm Engine

(For Gasoline Engine Model)

With your foot off the accelerator pedal, crank the engine by pressing the engine switch to change the ignition mode to "START".

NOTICE
Do not crank the engine for more than 12 seconds at a time. **If the engine doesn't start on the first try, wait about 15 seconds before trying again.**

After pressing the engine switch to change the ignition mode to "START", the starter cranks the engine for about 12 seconds before it can start the engine. If the engine fails to start at the first attempt, wait about 15 seconds, then try again while keeping the engine switch pressed while pressing down the accelerator pedal to 1/3 of its travel. Release the accelerator pedal when the engine starts.

If the engine still does not start, try holding the accelerator pedal all the way to the floor while cranking. This should clear the engine if it is flooded.

If you are unable to start the engine using this procedure, consult your SUZUKI dealer.

(For Diesel Engine Model)

Cold engine

Press the engine switch to change the ignition mode to "ON" and wait until the glow plug indicator goes out if it comes on. Crank the engine by pressing the engine switch to change the ignition mode to "START".

NOTICE
Do not crank the engine for more than 12 seconds at a time. **If the engine doesn't start on the first try, wait about 15 seconds before trying again.**

Warm engine

Crank the engine by pressing the engine switch to change the ignition mode to "START".

Caution when stopping the engine with turbocharger

When stopping the engine after climbing or high speed driving, let the engine idle for about one minute or more (if it is not prohibited) to cool down the turbocharger and engine oil. This is to prevent the engine oil from over-deteriorating. Deteriorated engine oil will damage the bearings of the turbocharger.

Restarting diesel engine after fuel-empty stop

The engine stops and the malfunction indicator light comes on if the engine feels fuel emptiness. To restart the engine, stop the vehicles, hold the ignition key in "ON" position or press the engine switch to change the ignition mode to "ON" for 5–10 seconds to feed fuel, then perform above engine starting procedure. Have the indicator light turned off by your SUZUKI dealer.

If the "PUSH" indicator light blinks and the engine cannot be started

Your keyless push start system remote controller may not be sensed as being within the "interior workable area". Try again after making sure that you have the remote controller with you. If the engine still cannot be started, the battery of the remote controller may be discharged. You must then use the following method to be able to start the engine.

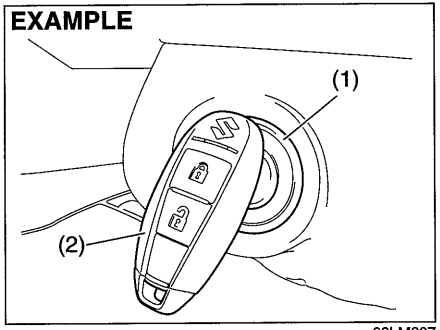

68LM307

1) Make sure the parking brake is set fully.
2) Manual Transaxle – Shift to "N" (Neutral) and fully depress the clutch pedal. Hold the clutch and brake pedals fully depressed.
   Automatic transaxle – If the gearshift lever is not in the "P" (Park) position, shift it to "P". Hold the brake pedal fully depressed.
3) The "PUSH" indicator light in the instrument cluster will come on. Press the engine switch (1).
4) Within about 10 seconds of blinking of the "PUSH" indicator light in the instrument cluster, touch the engine switch with the lock switch end of the remote controller (2) for about 2 seconds.

NOTE:
- *If you still cannot start the engine after several attempts using the above method, there may be a problem elsewhere, such as a low battery. Contact your SUZUKI dealer for inspection.*
- *The immobilizer/keyless push start system warning light come on for about 5 seconds while the "PUSH" indicator light is blinking.*
- *You may customize the system to cause the interior buzzer to sound once for the "remote controller out of sensing range" warning. Please contact an authorized SUZUKI dealer for the customization.*
- *If the battery of the remote controller is about to be completely discharged, the keyless push start system remote controller battery consumption warning light in the instrument cluster will come on for a few seconds when the ignition mode is changed to "ON" by pressing the engine switch. For details on replacing the battery, refer to the "Keyless Push Start System Remote Controller" in the "BEFORE DRIVING" section.*

Returning the ignition mode to "LOCK" (OFF)

Automatic transaxle – If the gearshift lever is in any position other than "P", or if the knob button is pushed when the gearshift lever is in "P" position the ignition mode cannot be returned to "LOCK" (OFF).

NOTE:
In the case of an automatic transaxle model, the engine cannot be returned to the "LOCK" (OFF) position if the gearshift lever is in any other position than "P".
Certain problems like a fault in engine system may prevent the engine switch from going back to the "LOCK" (OFF) mode. If this happens, have the vehicle inspected by an authorized SUZUKI dealer after doing the following:
- *Lock the doors using the key to prevent theft. (The request switches and the keyless push start system remote controller cannot be used to lock them.)*
- *Disconnect the negative cable from the battery to prevent discharge.*

"LOCK" (OFF) mode reminder buzzer

If the driver's door is opened without returning the ignition mode to "LOCK" (OFF) by pressing the engine switch, a buzzer sounds to warn you of this state.

- If you open the driver's door after pressing the engine switch to change the ignition mode to "ACC", the interior buzzer beeps intermittently.
- The buzzer will stop sounding if you then push the engine switch twice, thus bringing it back the ignition mode to "LOCK" (OFF).

NOTE:
Whenever you leave the vehicle, make sure you have returned the ignition mode to "LOCK" (OFF) using the engine switch and then lock the doors. Without returning the ignition mode to "LOCK" (OFF), you cannot use a request switch or keyless push start system remote controller to lock the doors.

Steering lock warning buzzer

If the steering lock fails to engage due to a fault in the system when you open the driver's door, the interior buzzer will warn you of this condition with repeated short beeps. If this happens, have the vehicle inspected by an authorized SUZUKI dealer.

Diesel Particulate Filter (DPF®) (For Diesel Engine Model)

The DPF® filters off the soot particles in the exhaust gas, so the DPF® could get clogged depending on the driving condition. The DPF® is cleaned by the regenerating function that combusts the soot particles in the DPF® by raising the exhaust gas temperature during driving or idling.

When a certain amount of soot particles is accumulated in the DPF®, the DPF® will regenerate automatically to avoid clogging the filter. When the DPF® regenerates during idling, the engine revolutions will increase by about 100 rpm and the radiator fan will operate. Therefore, you may hear a little louder engine sounds (including the fan sounds) and/or the exhaust gas temperature could be higher due to combustion of the soot particles.

⚠ CAUTION

Keep away from the exhaust pipe when the engine is running. If the DPF® is regenerating, the exhaust gas temperature could be higher.

NOTE:
When you drive or idle your vehicle, white smoke may be emitted depending on the grade of fuel used.
This is due to the particle filter regenerating automatically, and does not affect the way the vehicle runs.

DPF® warning light

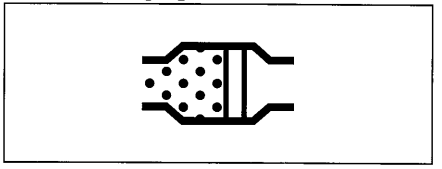

64J244

If the DPF® warning light comes on when driving, the DPF® is nearly clogged. You should regenerate the DPF® when the DPF® warning light comes on. To go out the warning light, the vehicle must stay in motion until regeneration has been completed.
The process normally takes about 25 minutes.
The optimum condition to end the process are achieved by keeping the vehicle in motion at a speed of 50km/h (31 mph) or higher, or an engine speed higher than 2,000 rpm.
However, you should drive carefully and within the legal speed limit, and should take in to consideration the surrounding traffic condition.
If you drive your vehicle until the light goes out, the regeneration of the DPF® will be completed.

NOTICE

Be sure to regenerate the DPF® when the DPF® warning light comes on. Failure to regenerate the DPF® will cause a vehicle malfunction due to the clogged filter.

NOTE:
When the soot particles accumulated in the DPF® are combusted, the amount of the engine oil may increase due to the dilution with the fuel. This is not a vehicle malfunction. The soot particles accumulated in the DPF® are combusted automatically during driving. However, they may not be combusted in the following cases.

- *When you drive at low speed for a long time.*
- *When you repeat a short-time or short-distance driving.*

1) When the DPF® warning light comes on, drive at a speed of 50 km/h (31 mph) or higher for more than 25 minutes to regenerate the DPF® properly. For details, refer to "Diesel Particulate Filter" in this section.

2) When the oil change request light blinks, change the engine oil.

3) When the engine oil level exceeds the MAX level on the dipstick, consult your SUZUKI dealer.

Using the Transaxle

Manual Transaxle

5M/T model

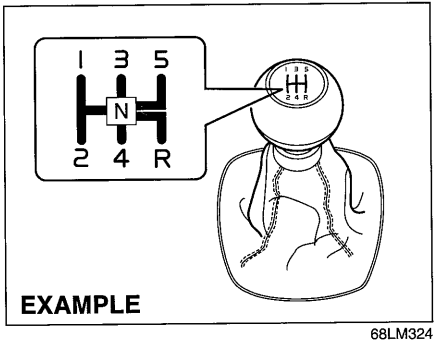

68LM324

6M/T model

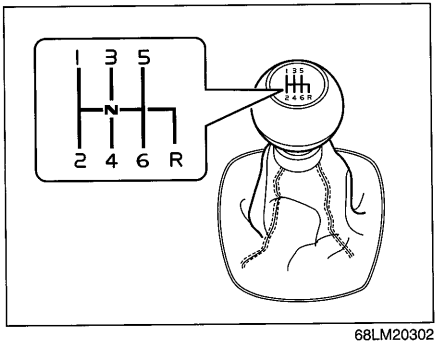

68LM20302

Starting off

To start off, depress the clutch pedal all the way to the floor and shift into 1st gear. After releasing the parking brake, gradually release the clutch. When you hear a change in the engine's sound, slowly press the accelerator while continuing to gradually release the clutch.

Shifting

All forward gears are synchronized, which provides for quiet, and easy shifting. Always depress the clutch pedal all the way to the floor before shifting gears. Keep the engine speed does not rise into the red zone of the tachometer.

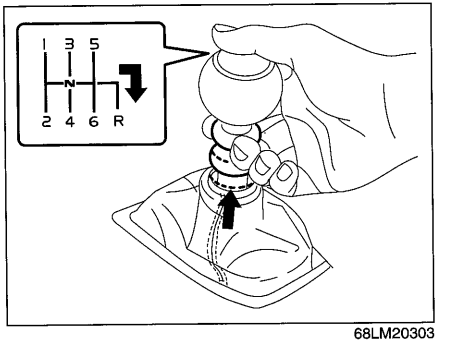

68LM20303

Reverse gear (6MT model): with lifting up ring, shift the gearshift lever to the right, engage gear.

Downshifting maximum allowable speeds

For 1.2 L Gasoline engine (5M/T 2WD model)

Downshifting	Km/h (mph)
2nd to 1st	45 (28)
3rd to 2nd	85 (53)
4th to 3rd	125 (78)
5th to 4th	165 (103)*

For 1.2 L Gasoline engine (5M/T 4WD model)

Downshifting	Km/h (mph)
2nd to 1st	45 (28)
3rd to 2nd	85 (53)
4th to 3rd	123 (76)
5th to 4th	167 (104)*

For 1.6 L Gasoline engine (6M/T model)

Downshifting	Km/h (mph)
2nd to 1st	50 (31)
3rd to 2nd	90 (56)
4th to 3rd	125 (78)
5th to 4th	165 (103)*
6th to 5th	210 (131)*

For 1.25 L Diesel engine

Downshifting	Km/h (mph)
2nd to 1st	40 (25)
3rd to 2nd	70 (43)
4th to 3rd	115 (71)
5th to 4th	155 (96)*

**NOTE:*
You may not accelerate to the maximum allowable speed because of the driving situation and/or the vehicle condition.

NOTICE

When downshifting to a lower gear, make sure not to downshift at the speed faster than the maximum allowable speeds for the next lower speed, or severe engine damage can result.

⚠ WARNING

- **Reduce your speed and downshift to a lower gear before going down a long or steep hill. A lower gear will allow the engine to provide braking. Avoid riding the brakes or they may overheat, resulting in brake failure.**
- **When driving on slippery roads, be sure to slow down before downshifting. Excessive and/or sudden changes in engine speed may cause loss of traction, which could cause you to lose control.**

NOTICE

Make sure that the vehicle is completely stationary before you shift into reverse.

NOTICE

- **To help avoid clutch damage, do not use the clutch pedal as a footrest while driving or use the clutch to keep the vehicle stationary on a slope. Depress the clutch fully when shifting.**
- **When shifting or starting off, do not race the engine. Racing the engine can shorten engine life and cause negative effect to smooth shifting.**

4-Speed Automatic Transaxle

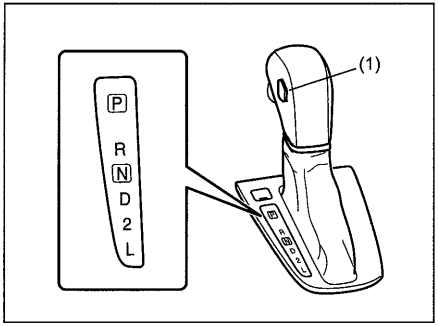

68LM310

(1) Overdrive off switch

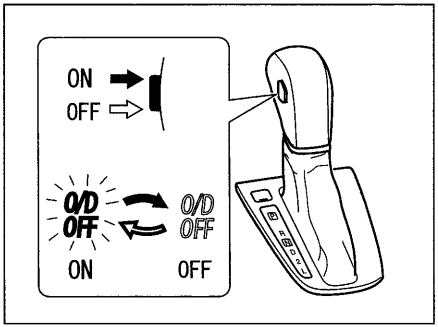

68LM313

Overdrive off switch
The transaxle is a 4-speed (3-speed plus overdrive) automatic transaxle. By operating the overdrive off switch, the transaxle can be converted to a 3-speed automatic transaxle that will not move to the overdrive position. To convert the transaxle to the 3-speed mode, push in the overdrive off switch and release it.

To return the transaxle to the 4-speed mode, push in the overdrive off switch again.

When the ignition switch is turned to the "ACC" position or press the engine switch to change the ignition mode to "ACC", the transaxle in the 3-speed mode is converted to the 4-speed mode automatically.

The 3-speed mode is suitable for the following driving conditions:
- Driving on hilly, winding roads
  - You can drive more smoothly with less frequent gear changing
- Going down a steep hill
  - Some engine braking is provided

Gearshift lever

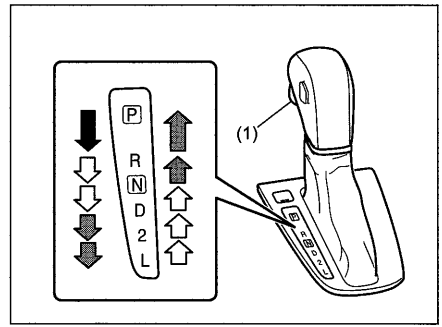

68LM311

(1) knob button

The gearshift lever is designed so that it cannot be shifted out of the "P" position unless the ignition switch is in the "ON" position or the ignition mode is "ON" and the brake pedal is depressed.

⚠ WARNING

Always depress the brake pedal before shifting from "P" (Park) (or "N" (Neutral) if the vehicle is stationary) to a forward or reverse gear, to help prevent the vehicle from moving unexpectedly when you shift.

The gearshift lever has a lock mechanism to help prevent accidental shifting. To shift the gearshift lever:

⬇	Shift with the knob button (1) pushed in and the brake pedal depressed.
⇧⇩	Shift with the knob button (1) pushed in.
⇧⇩	Shift without the knob button (1) pushed in.

NOTE:
- *Always shift the gearshift lever without pushing in the knob button (1) except when you shift "P" to "R", from "D" to "2", from "2" to "L", from "N" to "R" or from "R" to "P". If you always push in the knob button (1) when shifting the gearshift lever, you could shift into "P", "R", "2", or "L" by mistake.*
- *If driver's or passenger's knee hits the gearshift lever while driving, the lever could move and the gear could be changed unexpectedly.*

Use the gearshift lever positions as described below:

P (Park)
Use this position to lock the transaxle when the vehicle is parked or when starting the engine. Shift into Park only when the vehicle is completely stationary.

R (Reverse)
Use this position to reverse the vehicle from stop. Make sure that vehicle is completely stationary before shifting into Reverse.

N (Neutral)
Use this position for starting the engine if the engine stalls and you need to restart it while the vehicle is moving. You may also shift into Neutral and depress the brake pedal to hold the vehicle stationary during idling.

D (Drive)
Use this position for all normal driving.

With the gearshift lever in "D" range you can get an automatic downshift by pressing the accelerator pedal. The higher the vehicle speed is, the more you need to press the accelerator pedal to get a downshift.

2 (Low 2)
Use this position to provide extra power when climbing hills, or to provide engine braking when going down hills.

L (Low 1)
Use this position to provide maximum power when climbing steep hills or driving through deep snow or mud, or to provide maximum engine braking when going down steep hills.

NOTE:
If you move the gearshift lever to a lower gear while driving faster than the maximum allowable speed for the lower gear, the transaxle will not actually downshift until your speed drops below the maximum speed for the lower gear.

NOTICE

Be sure to take the following precautions to help avoid damage to the automatic transaxle:
- **Make sure that the vehicle is completely stationary before shifting into "P" or "R".**
- **Do not shift from "P" or "N" to "R", "D", "2", or "L" when the engine is running above idle speed.**
- **Do not rev the engine with the transaxle in a drive position ("R", "D", "2", or "L") and the front wheels not moving.**
- **Do not use the accelerator to hold the vehicle on a hill. Use the vehicle's brakes.**

If You Cannot Shift Automatic Transaxle Gearshift Lever Out of "P" (PARK)

Left Hand Drive Vehicle

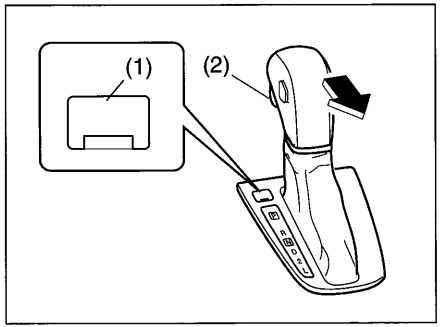

68LM312

Vehicles with an automatic transaxle have an electrically operated park-lock feature. If the vehicle's battery is discharged, or there is some other electrical failure, the automatic transaxle cannot be shifted out of Park in the normal way. Jump starting may correct the condition. If not, follow the procedure described below. This procedure will permit shifting the transaxle out of Park.

1) Be sure the parking brake is firmly applied.
2) If the engine is running, stop the engine.
3) Make sure the key is in the "ON" or "ACC" position, or the ignition mode is "ON" or "ACC".
4) Remove the cover (1) over the button.
5) With the release button(1) pushed by the key or the flat end rod, push the knob button (2) and shift the gearshift lever to the desired position.

This procedure is for emergency use only. If repeated use of this procedure is necessary, or the procedure does not work as described, take the vehicle to your dealer for repair.

Right Hand Drive Vehicle

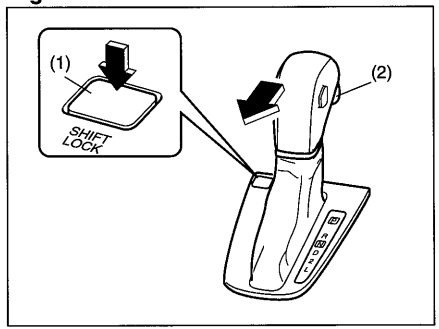

71LS10309

Vehicles with an automatic transaxle have an electrically operated park-lock feature. If the vehicle's battery is discharged, or there is some other electrical failure, the automatic transaxle cannot be shifted out of Park in the normal way. Jump starting may correct the condition. If not, follow the procedure described below. This procedure will permit shifting the transaxle out of Park.

1) Be sure the parking brake is firmly applied.
2) If the engine is running, stop the engine.
3) Make sure the key is in the "ON" or "ACC" position, or the ignition mode is "ON" or "ACC".
4) With the release button (1) pushed, push the knob button (2) and shift the gearshift lever to the desired position.

This procedure is for emergency use only. If repeated use of this procedure is necessary, or the procedure does not work as described, take the vehicle to your dealer for repair.

ENG A-STOP System (Engine Auto Stop Start System) (if equipped)

The ENG A-STOP system (Engine Auto Stop Start System) automatically stops and restarts the engine without operating the ignition switch or the engine switch when the vehicle is stopped, such as at a traffic signal or in a traffic jam, to reduce exhaust gases and fuel consumption.

⚠ WARNING

When the vehicle will be stopped for a long time or when you will leave the vehicle unattended, turn the ignition switch to the "LOCK" position or press the engine switch to stop the engine.

NOTICE

Only use the vehicle battery types that have been approved by SUZUKI vehicle manufacture, otherwise you could damage your vehicle, and the ENG A-STOP system could not be available. If a vehicle battery has to be replaced, consult your authorized SUZUKI dealer.

The ENG A-STOP system is automatically activated when the ignition switch is turned to the "ON" position or the engine switch is pressed to change the ignition mode to "ON".

The system activation also requires the following conditions:
- Driver's seat belt is fastened.
- Driver's door is closed.
- Engine hood is closed.

For more details, refer to the explanation below.

Automatically stopping the engine

1) Stop the vehicle.

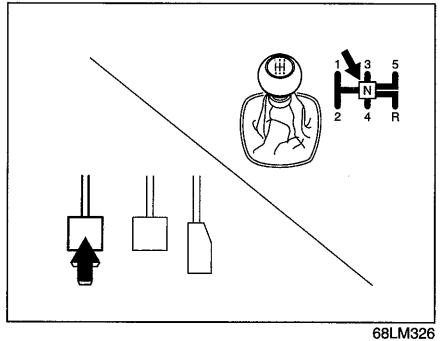

68LM326

2) While depressing the brake pedal, fully depress the clutch pedal and place the gearshift lever in the "N" (Neutral) position.

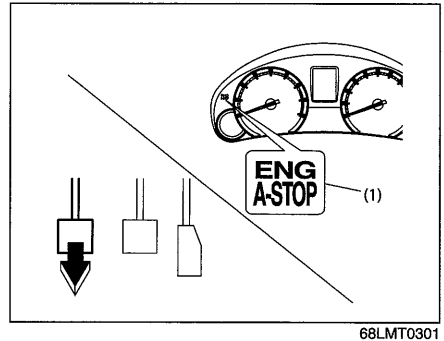

68LMT0301

3) Release the clutch pedal.
The "ENG A-STOP" indicator light (green) (1) in the instrument cluster will illuminate and the engine will stop automatically.

NOTICE

The brake booster becomes inoperative and the pedal effort will increase when the engine is stopped automatically.
If the vehicle is moving, press down the brake pedal harder than usual.

NOTE:
The ENG A-STOP system will not operate and engine does not stop automatically under the following conditions:
- *The "ENG A-STOP OFF" switch is pressed to deactivate the ENG A-STOP system.*

- *The "ENG A-STOP" warning light comes on.*
- *Engine coolant temperature is low.*
- *Vehicle battery performance is low.*
- *The temperature of the vehicle battery is either low or high.*
- *Brake booster vacuum pressure is low.*
- *Depressing the accelerator pedal.*
- *Blower speed selector is set to the "ON" mode and the inside of the vehicle has not sufficiently cooled and warmed (for the vehicle with automatic air conditioning).*
- *The defrost switch is set to the "ON" mode (for the vehicle with automatic air conditioning).*
- *During or after the ABS system is activated, and the vehicle is stopped.*
- *During the first period use, to initialize the system.*
- *After the engine restarted automatically, and the vehicle speed had not exceeded approximately 6 km/h.*
- *When the engine is started with the hood open.*

Automatically restarting the engine

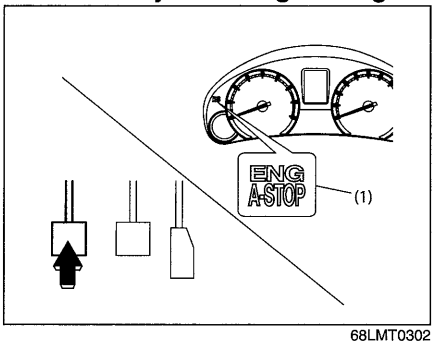

68LMT0302

Depress the clutch pedal while the gearshift lever is in the "N" (Neutral) position. "ENG A-STOP" indicator light (green) (1) in the instrument cluster will be turned off and the engine will restart automatically.

NOTICE

The ENG A-STOP system will not operate and engine does not restart automatically or the engine stalls with warning buzzer under the following conditions:

- **Driver's seat belt is not fastened and driver's door is open.**
- **Engine hood is open.**
- **If the gearshift lever is moved to a position other than the "N" (Neutral) position without depressing the clutch pedal.**

When the engine stalled, restart the engine by usual operation.
Refer to "Starting the Engine" in this section for details.

NOTE:
If the engine stalled by a rapid clutch operation, the engine will restart with the gear positioned "N" (neutral) and the clutch pedal depressed.

NOTE:
Under the following conditions, the engine will restart automatically even if the engine was stopped by the ENG A-STOP system:
- *When the vehicle coasts down a slope.*
- *An engine stopped, and a few minutes passed.*
- *Brake booster vacuum pressure is low.*
- *Vehicle battery performance is low.*
- *Blower speed selector is set to the "ON" mode and the inside of the vehicle has not sufficiently cooled and warmed (for the vehicle with automatic air conditioning).*
- *The defrost switch is set to the "ON" mode (for the vehicle with automatic air conditioning).*
- *Electric power consumption is high, such as when the heated rear window and heated outside rearview mirrors (if equipped) switch is "ON" or other electrical components (audio, air conditioning etc.) are operating.*
- *The "ENG A-STOP OFF" switch is pressed to deactivate the ENG A-STOP system.*

NOTE:
When the engine restarts, the sound of the audio may be interrupted.
This is normal and not the malfunction of the audio system.

To deactivate the ENG A-STOP System

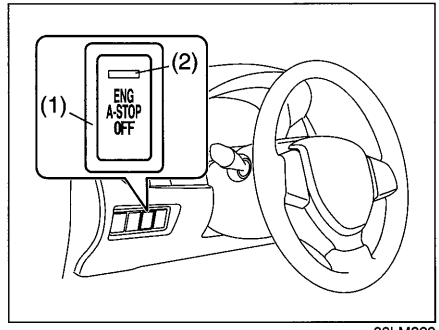

68LM329

Push the "ENG A-STOP OFF" switch (1). The indicator light (amber) (2) will come on.

"ENG A-STOP" Warning Light

If the "ENG A-STOP" warning light comes on when driving, there may be something wrong with the ENG A-STOP system. You should have the system inspected by an authorized SUZUKI dealer. For details, refer to "Warning and Indicator Lights" in the "BEFORE DRIVING" section.

Cruise Control (if equipped)

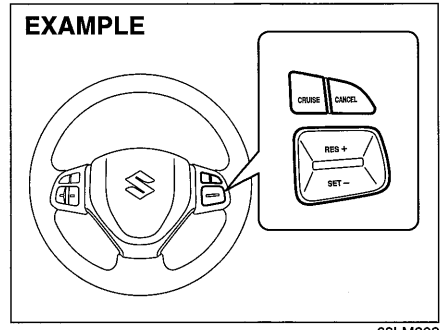

68LM303

The cruise control system allows you to maintain a steady speed without keeping your foot on the accelerator pedal. The controls for operating the cruise control system are on the steering wheel.

You can use the cruise control system with the following conditions:
- For manual transaxle vehicle, the gear position is in 3rd, 4th, 5th, 6th (if equipped) (for gasoline engine model) or 4th, 5th (for diesel engine model).
- For automatic transaxle vehicle, the select lever is in "D" position.
- The vehicle speed is about 40 km/h (25 mph) or higher.

⚠ WARNING

To help avoid loss of vehicle control, do not use the cruise control system when driving in heavy traffic, on slippery or winding roads, or on steep downgrades.

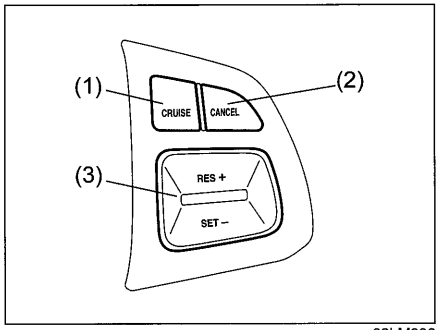

68LM306

(1) "CRUISE" switch
(2) "CANCEL" switch
(3) "RES +/SET –" switch

To Set Cruising Speed

1) Turn on the cruise control system by pushing the "CRUISE" switch (1). When the "CRUISE" indicator light comes on, you can set cruising speed.
2) Accelerate or decelerate to the desired speed.
3) Push down the "RES +/SET –" switch (3) and turn on the "SET" indicator light. Take your foot off the accelerator pedal and the set speed will be maintained.

⚠ WARNING

If the cruising speed is set by accident, you cannot decelerate or could loose control of the vehicle. This could lead to an accident, resulting in severe injury or death.

Turn off the cruise control system and make sure the "CRUISE" indicator light is off when the system is not in use.

"CRUISE" Indicator Light

CRUISE

52D113

When you push the "CRUISE" switch, the system is on and a "CRUISE" indicator light on the instrument cluster will be on.

"SET" Indicator Light

SET

65D474

When the vehicle's speed is controlled by the cruise control system, a "SET" indicator light on the instrument cluster will be on.

To Change Speed Temporarily

When the cruising speed is maintained, you can temporarily accelerate or decelerate.

To accelerate, depress the accelerator pedal. When you take your foot off the pedal, your vehicle will return to the set speed.

To decelerate, depress the brake pedal. The set speed will be canceled and "SET" indicator light will go off.
To resume the previously set speed, push up the "RES +/SET –" switch (3) and turn on the "SET" indicator light again when vehicle speed is above 40 km/h (25 mph). The vehicle will accelerate to and maintain the previously set speed.

NOTE:
For automatic transaxle vehicle, when the cruising speed is maintained, you cannot decelerate by using the engine brake.
To decelerate while the cruise control is on, depress the brake pedal or push down the "RES +/SET –" switch (3).

To Change Cruising Speed

Using the accelerator pedal
To reset at a faster cruising speed, accelerate to the desired speed using the accelerator pedal and push down the "RES +/SET –" switch (3). The new speed will be maintained.

Using the brake pedal
To reset at a slower cruising speed, decelerate to the desired speed using the brake pedal and push down the "RES +/SET –" switch (3). The new speed will be maintained.

NOTE:
When the brake pedal is depressed, the "SET" indicator light goes off until reset the cruising speed.

Using the cruise control switch
To reset at a faster cruising speed, press repeatedly or hold push up the "RES +/SET –" switch (3). Vehicle speed will steadily increase. When you release the switch, the new speed will be maintained.

To reset at a slower cruising speed, press repeatedly or hold push down the "RES +/SET –" switch (3) until the vehicle has slowed to the desired speed, then release the switch. The new speed will be maintained.

NOTE:
You can adjust the set speed by approximately 1.6 km/h (1.0 mph) by pushing a cruise control switch quickly.

Cancellation of the Cruise Control
The "SET" indicator light will go off and the cruise control will be canceled temporarily with following procedures:

- Push the "CANCEL" switch (2).
- Depress the brake pedal.
- For manual transaxle, depress the clutch pedal.
- The vehicle speed falls more than about 20 percent from the set speed.
- Any time the vehicle speed falls below 40 km/h (25 mph).
- When the vehicle skids and ESP® is activated.

To resume the previously set speed, push up the "RES +/SET –" switch (3) and turn on the "SET" indicator light. Besides, the vehicle speed has to be above 40 km/h (25 mph) when the vehicle is not in the above conditions.

To turn off the cruise control system, push the "CRUISE" switch (1) and make sure the "CRUISE" indicator light is off.
Also, if the malfunction indicator light in the instrument cluster comes on or blinks, the cruise control system will be turned off.

NOTE:
If you turn off the cruise control system, the previously set speed in the memory is cleared. Reset your cruising speed again.

Braking

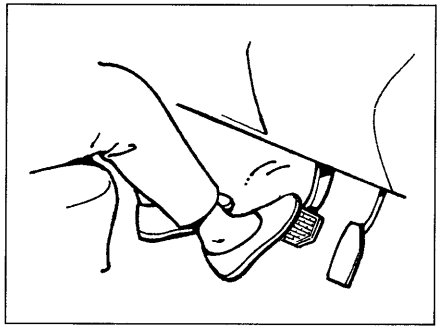

60G165S

The distance needed to bring any vehicle to a halt increases with the speed of the vehicle. The braking distance needed, for example, at 60 km/h (37 mph) will be approximately 4 times greater than the braking distance needed at 30 km/h (19 mph). Start to brake the vehicle when there is plenty of distance between your vehicle and the stopping point, and slow down gradually.

⚠ WARNING

If water gets into the brake drums, brake performance may become poor and unpredictable. After driving through water or washing the underside of the vehicle, test the brakes while driving at a slow speed to see if they have maintained their normal effectiveness. If the brakes are less effective than normal, dry them by repeatedly applying the brakes while driving slowly until the brakes have regained their normal effectiveness.

Power-Assisted Brakes

Your vehicle has power-assisted brakes. If power assistance is lost due to a stalled engine or other failures, the system is still fully operational on reserve power and you can bring the vehicle to a complete stop by pressing the brake pedal once and holding it down. The reserve power is partly used up when you depress the brake pedal and reduces each time the pedal is pressed. Apply smooth and even pressure to the pedal. Do not pump the pedal.

⚠ WARNING

Even without reserve power in the brake system, you can still stop the vehicle by pressing the brake pedal harder than normally required. However, the stopping distance may be longer.

Brake Assist System

When you slam the brakes on, the brake assist system judges as an emergency stop and provides more powerful braking for a driver who cannot hold down the brake pedal firmly.

NOTE:
If you quickly and forcefully depress the brakes, you may hear a clicking sound in the brake pedal. This is normal and indicates that the brake assist system is activated properly.

Anti-Lock Brake System (ABS)

ABS will help you avoid skidding by electronically controlling braking pressure. It will also help you maintain steering control when braking on slippery surfaces or when braking hard.
The ABS works automatically, so you do not need any special braking technique. Just push the brake pedal down without pumping. The ABS will operate whenever it senses that the wheels are locking up. You

may feel the brake pedal moves a little while the ABS is operating.

NOTE:
The ABS will not work if vehicle speed is under about 9 km/h (6 mph).

⚠ WARNING

- **On some types of loose surfaces (such as gravel, snow-covered roads, etc.) the stopping distance required for an ABS-equipped vehicle may be slightly greater than for a comparable vehicle with a conventional brake system. With a conventional brake system, skidding tires are able to "plow" the gravel or snow layer, shortening the stopping distance. ABS minimizes this resistance effect. Allow for extra stopping distance when driving on loose surfaces.**
- **On regular paved roads, some drivers may be able to obtain slightly shorter stopping distances with conventional brake systems than with ABS.**

(Continued)

⚠ WARNING

(Continued)

- **In both of the above conditions, ABS will still offer the advantage of helping you maintain directional control. However, remember that ABS will not compensate for bad road or weather conditions or poor driver judgment. Use good judgment and do not drive faster than conditions will safely allow.**

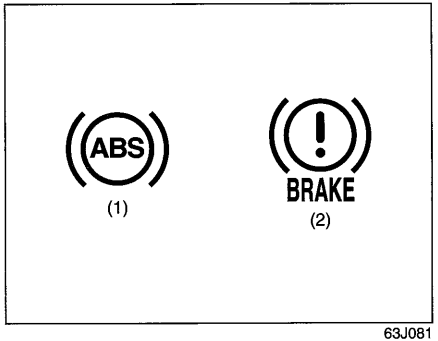

(1) ABS warning light
(2) Brake system warning light

⚠ WARNING

- **If the ABS warning light (1) on the instrument panel comes on and stays on while driving, there may be a problem with the ABS system. Ask your SUZUKI dealer to inspect the ABS system immediately. If the ABS system becomes inoperative, the brake system will function as an ordinary brake system that has no ABS.**
- **If the ABS warning light (1) and the Brake system warning light (2) on the instrument panel simultaneously stays on or comes on when driving, both anti-lock function and rear brake force control function (proportioning valve function) of the ABS system may have failed. If so, the rear wheels may easily skid or the vehicle can even spin in the worst case when braking on a slippery road or when hard braking even on a dry paved road. Ask your SUZUKI dealer to inspect the ABS system immediately. Drive carefully, avoiding hard braking as much as possible.**

How the ABS Works

A computer continuously monitors wheel speed. The computer compares the changes in wheel speed when braking. If the wheels slow suddenly, indicating a skidding situation, the computer will change braking pressure several times each second to prevent the wheels from locking. When you start your vehicle or when you accelerate after a hard stop, you may hear a momentary motor or clicking noise as the system resets or checks itself.

⚠ WARNING

The ABS may not work properly if tires or wheels other than those specified in the owner's manual are used. This is because the ABS works by comparing changes in wheel speed. When replacing tires or wheels, use only the size and type specified in this owner's manual.

Electronic Stability Program (ESP®)

ESP® is a registered trademark of Daimler AG.

The Electronic Stability Program (ESP®) helps to control the vehicle during cornering if front wheels or rear wheels skid. It also assists you in maintaining traction while accelerating on loose or slippery road surfaces. It does this by regulating the engine's output, and by selectively applying the brakes. In addition, ESP® helps to avoid skidding by controlling braking pressure.

⚠ WARNING

The ESP® cannot enhance the vehicle's driving stability in all situations and does not control your vehicle's entire braking system. The ESP® cannot prevent accidents, including those resulting from excessive speed in turns, or hydroplaning. Only a safe and attentive driver can prevent accidents. The capabilities of an ESP®-equipped vehicle must never be used as a substitute for careful driving.

The ESP® has the following three systems:

Stability Control System

The vehicle stability control system helps provide integrated control of systems such as anti-lock brakes, traction control, engine control, etc. This system automatically controls the brakes and engine to help prevent the vehicle from skidding when cornering on a slippery road surface or when turning the steering wheel abruptly.

Traction Control System

The traction control system automatically helps prevent the spinning of wheels when the vehicle is started or accelerated on slippery road surfaces. The system operates only if it senses that some of the wheels are spinning or beginning to lose traction. When this happens, the system operates the front or rear brakes and reduces engine power to limit wheel spin.

NOTE:
You may hear a clunking sound when you start the engine or after the vehicle begins to move. This means that the above systems are in the self-check mode. This sound does not indicate a malfunction.

Anti-Lock Braking System (ABS)

ABS will help you avoid skidding by electronically controlling braking pressure. It will also help you maintain steering control when braking on slippery surfaces or when braking hard. The ABS works automatically, so you do not have to use any special braking technique. Just push the brake pedal down without pumping. The ABS will operate whenever it senses that wheels are locking up. You may feel the brake pedal pulsate while the ABS is operating.
(For more information on ABS, see "Braking" in the "OPERATING YOUR VEHICLE" section.)

NOTE:
If the ABS system is activated, you may hear a clunking noise and/or feel pulsating in the brake pedal. This is normal and indicates that the brake fluid pressure is being controlled properly.

⚠ WARNING

- **The ESP® may not work properly if tires or wheels other than those specified in the Owner's Manual are used. When replacing tires or wheels, use only the size and type specified in this Owner's Manual.**
- **The ESP® may not work properly if tires are not inflated to the recommended tire inflation pressure.**
- **The ESP® may not work properly if tires are fitted with tire chains.**
- **The ESP® may not work properly if the tires are excessively worn. Be sure to replace tires when the tread wear indicators in the grooves appear on the tread surface.**
- **The ESP® is not a substitute for winter tires or tire chains on a snow covered road.**

⚠ WARNING

- **The ESP® may not work properly if engine related parts such as the muffler are not equivalent to standard equipment or are extremely deteriorated.**
- **Do not modify the vehicle's suspension since the ESP® may not operate correctly.**

The ESP® indicator lights are described below:

ESP® Warning Light

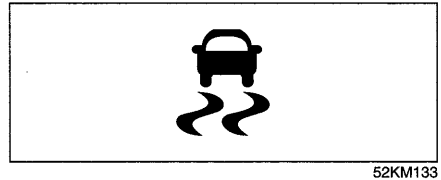

52KM133

This light blinks 5 times per second when one of the ESP® systems other than ABS is activated. If this light blinks, drive carefully.
When the ignition switch is turned to the "ON" position, or the engine switch is pressed to change the ignition mode to "ON", the light comes on briefly so you can check that the light is working.

NOTICE

If the ESP® warning light comes on and stays on while driving, there may be a malfunction of the ESP® systems (other than ABS). You should have the systems inspected by an authorized SUZUKI dealer.

NOTE:
When the ESP® warning light comes on and stays on while driving, indicating a malfunction of the ESP® systems (other than ABS), the brake system will function

as an ordinary ABS with no additional ESP® functions.

ESP® OFF Indicator Light

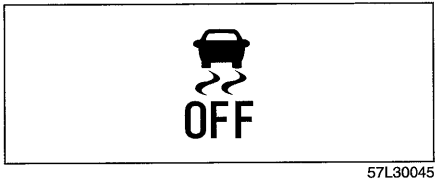

57L30045

You should turn the ESP® on during your ordinary driving, so that you have the benefits of all of the ESP® systems.

It may be required to turn the ESP® systems (other than ABS) off if your vehicle is stuck in sand, mud, or snow, where wheel spin is necessary.

ESP® OFF switch

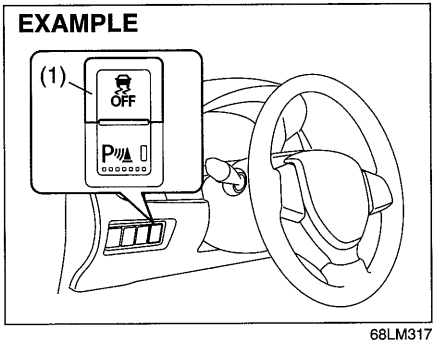

68LM317

(1) ESP® OFF switch

When the ESP® OFF switch located at the instrument panel is pushed and held to turn off the ESP® systems (other than ABS), the ESP® OFF indicator light in the instrument cluster comes on.
When you have turned the ESP® systems (other than ABS) off, make sure to turn them back on before resuming ordinary driving.
When you push the ESP® OFF switch again, the ESP® OFF indicator light will go out and all of the ESP® systems will be activated.

ABS Warning Light / Brake System Warning Light

See "Braking" in the "OPERATING YOUR VEHICLE" section.

Hill Hold Control System (if equipped)

The hill hold control system is designed to assist you in starting to move up steep or slippery hills. When you start to move up a hill, the system helps to prevent the vehicle from rolling downward while you move your foot from the brake pedal to the accelerator pedal.

⚠ WARNING

- **Do not rely excessively on the hill hold control system. The hill hold control system may not prevent the vehicle from rolling downward on a hill under all load or road conditions. Always be prepared to depress the brake pedal to prevent the vehicle from rolling downward. Failure to pay attention and depress the brake pedal to hold the vehicle on a hill when necessary, may result in loss of control or an accident.**
- **Do not use the hill hold control system to bring the vehicle to a stop on a hill.**

The hill hold control system activates for a maximum of about 2 seconds if your foot is moved from the brake pedal when the following condition are all met.

1) The gearshift lever is in a forward gear or reverse gear.
2) The parking brake is released.
3) The vehicle is on an upward incline.

NOTE:
You may hear a sound coming from the engine when the hill hold control system is activated. This sound is normal and does not indicate a malfunction.

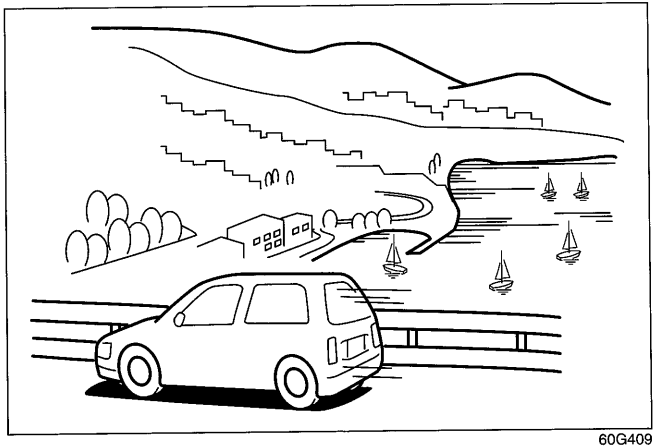

60G409

DRIVING TIPS

Running-in 4-1
Catalytic Converter 4-1
Improving Fuel Economy 4-2
Highway Driving 4-3
Driving on Hills 4-3
Driving on Slippery Roads 4-4

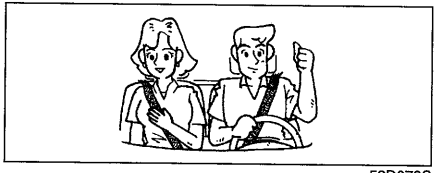

52D078S

⚠ WARNING

- **Wear Your Seat Belts at All Times. Even though air bags are equipped at the front seating positions, the driver and all passengers should be properly restrained at all times, using the seat belts provided. Refer to the "Seat Belts and Child Restraint Systems" section for instructions on proper use of the seat belts.**
- **Never drive while under the influence of alcohol or other drugs. Alcohol and drugs can seriously impair your ability to drive safely, greatly increasing the risk of injury to yourself and others. You should also avoid driving when you are tired, sick, irritated, or under stress.**

Running-in

NOTICE

The future performance and reliability of the engine depends on the care and restraint exercised during its early life. It is especially important to observe the following precautions during the initial 960 km (600 miles) of vehicle operation.

- **After starting, do not race the engine. Warm it up gradually.**
- **Avoid prolonged vehicle operation at a constant speed. Moving parts will break in better if you vary your speed.**
- **Start off from a stop slowly. Avoid full throttle starts.**
- **Avoid hard braking, especially during the first 320 km (200 miles) of driving.**
- **Do not drive slowly with the transaxle in a high gear.**
- **Drive the vehicle at moderate engine speeds.**
- **Do not tow a trailer during the first 960 km (600 miles) of vehicle operation.**

Catalytic Converter

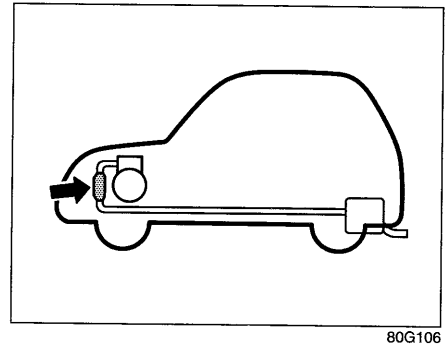

80G106

The purpose of the catalytic converter is to minimize the amount of harmful pollutants in your vehicle's exhaust. Use of leaded fuel in vehicles equipped with catalytic converters is prohibited, because lead deactivates the pollutant-reducing components of the catalyst system.

The converter is designed to last the life of the vehicle under normal usage and when unleaded fuel is used. No special maintenance is required on the converter. However, it is very important to keep the engine properly tuned. Engine misfiring, which can result from an improperly tuned engine, may cause overheating of the catalyst. This may result in permanent heat damage to the catalyst and other vehicle components.

NOTICE

To minimize the possibility of catalyst or other vehicle damage:

- **Maintain the engine in the proper operating condition.**
- **In the event of an engine malfunction, particularly one involving engine misfire or other apparent loss of performance, have the vehicle serviced promptly.**
- **Do not turn off the engine or interrupt the ignition when the transaxle is in gear and the vehicle is in motion.**
- **Do not try to start the engine by pushing or towing the vehicle, or coasting down a hill.**
- **Do not idle the engine with any spark plug wires disconnected or removed, such as during diagnostic testing.**
- **Do not idle the vehicle for prolonged periods if idling seems rough or there are other malfunctions.**
- **Do not allow the fuel tank to get near the empty level.**

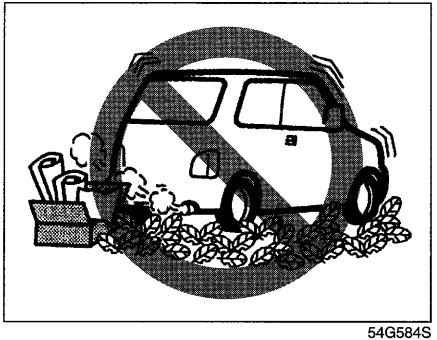

54G584S

⚠ WARNING

Be careful where you park and drive; the catalytic converter and other exhaust components can get very hot. As with any vehicle, do not park or operate this vehicle in areas where combustible materials such as dry grass or leaves can come in contact with a hot exhaust system.

Improving Fuel Economy

The following instructions will help you improve fuel economy.

Avoid excessive idling

If you are to wait for more than a minute while you are parked, stop the engine and start it again later. When warming up a cold engine, allow the engine to idle until the temperature gauge pointer comes up to the "C" position (if the idling is not prohibited). In this position, the engine is sufficiently warm for starting off.

Avoid "fast" starts

Fast starts away from lights or stop signs will consume fuel unnecessarily and shorten engine life. Start off slowly.

Avoid unnecessary stops

Avoid unnecessary deceleration and stopping. Try to maintain a slow, steady speed whenever possible. Slowing down and then accelerating again uses more fuel.

Keep a steady cruising speed

Keep as constant a speed as road and traffic conditions will permit.

Keep the air cleaner clean

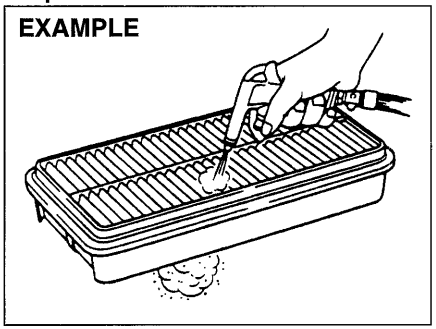

60A183S

If the air cleaner is clogged with dust, there will be greater intake resistance, resulting in decreased power output and increased fuel consumption.

Keep weight to a minimum
The heavier the load, the more fuel the vehicle consumes. Take out any luggage or cargo when it is not necessary.

Keep tire pressures correct
Underinflation of the tires can waste fuel due to increased running resistance of the tires. Keep your tires inflated to the correct pressure shown on the label on the driver's side door or the driver's door lock pillar.

Highway Driving

When driving at highway speeds, pay attention to the following:

- Stopping distance progressively increases with vehicle speed. Apply the brakes far enough ahead of the stopping point to allow for the extra stopping distance.
- On rainy days, "Hydroplaning" can occur. "Hydroplaning" is the loss of direct contact between the road surface and the vehicle's tires due to a water film forming between them. Steering or braking the vehicle while "Hydroplaning" can be very difficult, and loss of control can occur. Keep speed down when the road surface is wet.
- At high speeds, the vehicle may be affected by side winds. Therefore, reduce speed and be prepared for unexpected buffeting, which can occur at the exits of tunnels, when passing by a cut of a hill, or when being overtaken by large vehicles, etc.

Driving on Hills

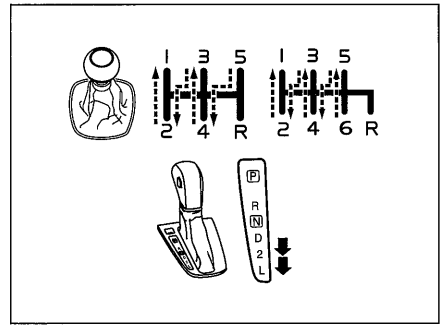

68LM20401

- When climbing steep hills, the vehicle may begin to slow down and show a lack of power. If this happens, you should shift to a lower gear so that the engine will again be operating in its normal power range. Shift rapidly to prevent the vehicle from losing momentum.
- When driving down a hill, the engine should be used for braking by shifting to next lower gear. (Do this with EITHER an automatic or manual transaxle.)

⚠ WARNING

Try not to hold the brake pedal down too long or too often while going down a steep or long hill. This could cause the brakes to overheat, resulting in reduced braking efficiency. Failure to take this precaution could result in loss of vehicle control.

NOTICE

When descending a down hill, NEVER turn the ignition key to the "OFF" position or press the engine switch to change the ignition mode to "LOCK" (OFF). Emission control system and automatic transaxle (if equipped) damage may result.

Driving on Slippery Roads

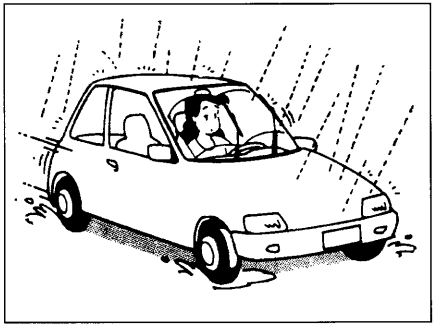

60G089S

Under wet road conditions you should drive at a lower speed than on dry roads due to possible slippage of tires during braking. When driving on icy, snow-covered, or muddy roads, reduce your speed and avoid sudden acceleration, abrupt braking, or sharp steering movements.

For 4-Wheel Drive (4WD) Models

Your 4WD is designed to get better traction on slippery roads than 2-wheel drive models.

However, your 4WD will not have as much traction in deep snow, mud or sand as multipurpose 4WD vehicles. You should not attempt to drive your 4WD in deep snow, mud or sand.

Tire Chains

Tire chains should only be used if they are needed to increase traction or are required by law. Make sure that the chains you use are the correct size for your vehicle's tires. Also make sure that there is enough clearance between the fenders and the chains as installed on the tires.

Install the chains on the front tires tightly, according to the chain manufacturer's instructions. Retighten the chains after driving about 1.0 km (1/2 mile) if necessary. With the chains installed, drive slowly.

NOTICE

- **If you hear the chains hitting against the vehicle body while driving, stop and tighten them.**
- **If your vehicle is equipped with full wheel caps, remove the wheel caps before installing the chains or the wheel caps can be damaged by the chain bands.**

If Your Vehicle Gets Stuck

If your vehicle gets stuck in snow, mud, or sand, follow the directions below:

1) Shift the transaxle back and forth between a forward range (or first gear for manual transaxle) and reverse. This will create a rocking motion which may give you enough momentum to free the vehicle. Press gently on the accelerator to keep wheel spinning to a minimum wheel rpm. Remove your foot from the accelerator while shifting.
   Do not race the engine. Excessive wheel spin will cause the tires to dig deeper, making it more difficult to free the vehicle.
2) If your vehicle remains stuck after a few minutes of rocking, get another vehicle to pull your vehicle out.

⚠ WARNING

Do not allow anyone to stand near the vehicle when you are rocking it, and do not spin the wheels faster than an indicated 40 km/h (25 mph) on the speedometer. Personal injury and/ or vehicle damage may result from spinning the wheels too fast.

NOTICE

Do not continue rocking the vehicle for more than a few minutes. Prolonged rocking can cause engine overheating or transaxle damage.

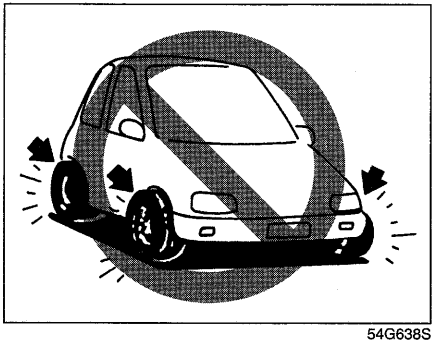

54G638S

⚠ WARNING

In addition to following the driving tips in this section, it is important to observe the following precautions.

- **Make sure your tires are in good condition and always maintain the specified tire pressure. Refer to "Tires" in the "INSPECTION AND MAINTENANCE" section for details.**

(Continued)

⚠ WARNING

(Continued)

- **Do not use tires other than those specified by SUZUKI. Never use different sizes or types of tires on the front and rear wheels. For information regarding the specified tires, refer to the Tire Information Label located on the driver's door lock pillar.**
- **Never use oversized tires or special shock absorbers and springs to raise (jack up) your vehicle. This will change the handling characteristics. Oversized tires may also rub against the fender over bumps, causing vehicle damage or tire failure.**
- **After driving through water, test the brakes while driving at a slow speed to see if they have maintained their normal effectiveness. If the brakes are less effective than normal, dry them by repeatedly applying the brakes while driving slowly until the brakes have regained their normal effectiveness.**

OTHER CONTROLS AND EQUIPMENT

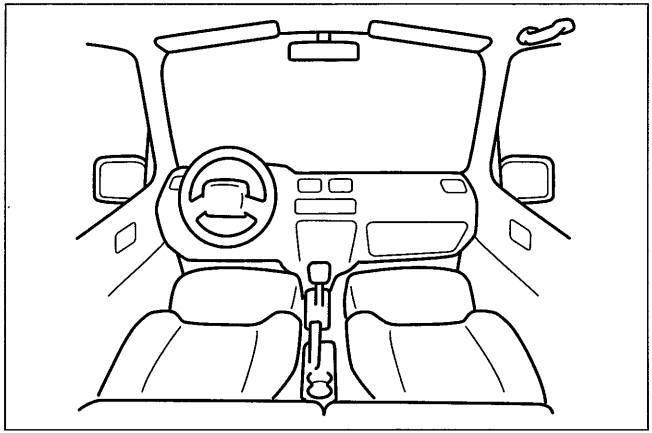

60G407

Heating and Air Conditioning System 5-1
Heating System 5-3
Manual Heating and Air Conditioning System 5-5
Automatic Heating and Air Conditioning System
(Climate Control) 5-10
Radio Antenna 5-16
Installation of Radio Frequency Transmitters 5-16
Audio System 5-17
Fuel Filler Cap 5-71
Engine Hood 5-72
Sun Visor 5-73
Interior Light Switch 5-74
Luggage Compartment Light 5-75
Spot Light (if equipped) 5-75
Accessory Socket 5-75
Assist Grips 5-76
Sunroof (if equipped) 5-77
Glove Box 5-79
Instrument Panel Upper Box 5-79
Cup Holder and Storage Area 5-80
Front Seat Back Pocket (if equipped) 5-81
Footrest 5-82
Floor Mats (if equipped) 5-82
Shopping Hook (if equipped) 5-83
Luggage Compartment Cover 5-83
Roof Rack Anchors 5-84
Frame Hooks 5-85

Heating and Air Conditioning System

There are three types of heating and air conditioning systems as follows:

- Heating System
- Manual Heating and Air Conditioning System
- Automatic Heating and Air Conditioning System (Climate Control)

Air Outlet

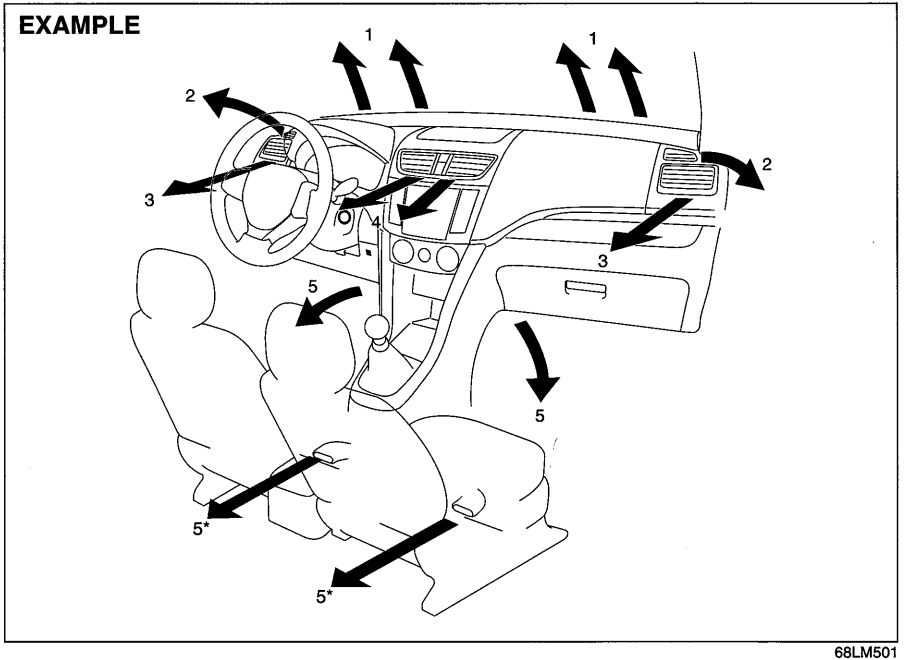

68LM501

1. Windshield defroster outlet
2. Side defroster outlet
3. Side outlet
4. Center outlet
5. Floor outlet
   * if equipped

Side outlet

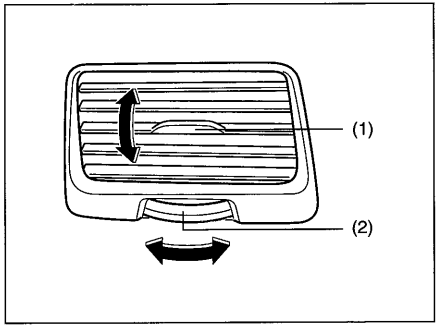

68LM502

Move the knob (1) vertically and the dial (2) horizontally, to adjust the direction of airflow as desired. When "Open", air comes out from the side outlets regardless of the airflow selector position.

Center outlet

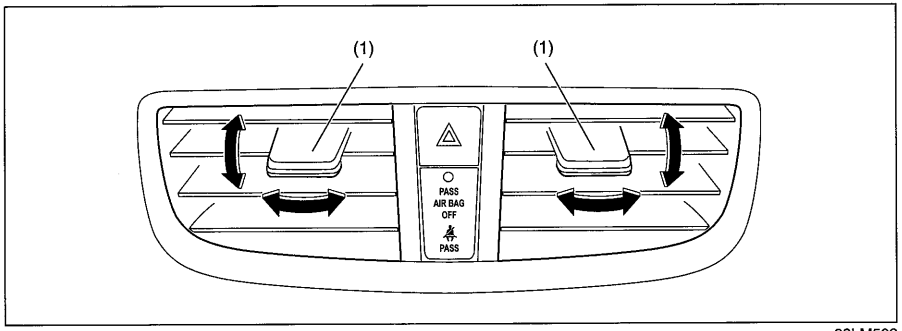

68LM503

Move the knob (1) vertically or horizontally to adjust the direction of airflow as desired.

Heating System

Description of Controls

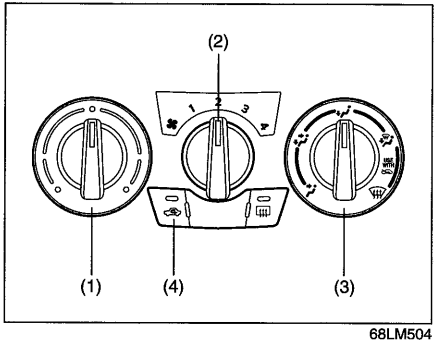

68LM504

Temperature selector (1)
This is used to select the temperature by turning the selector.

Blower speed selector (2)
This is used to turn on the blower and to select blower speed by turning the selector.

Air flow selector (3)

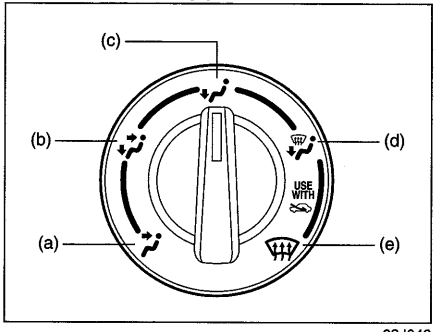

63J048

This is used to select one of the functions described below.

Ventilation (a)

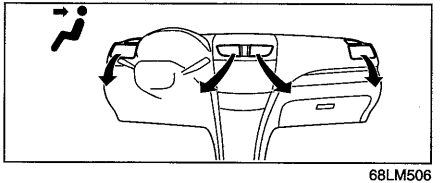

68LM506

Temperature-controlled air comes out of the center and side air outlets.

Bi-level (b)

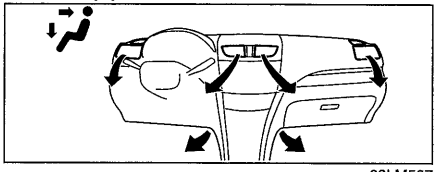

68LM507

Temperature-controlled air comes out of the floor outlets and cooler air comes out of the center and side outlets. When the temperature selector (1) is in the fully COLD position or fully HOT position, however, the air from the floor outlets and the air from the center and side outlets will be the same temperature.

Heat (c)

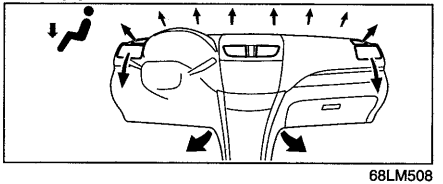

68LM508

Temperature-controlled air comes out of the floor outlets and the side outlets, also comes out of the windshield defroster outlets and also comes slightly out of the side defroster outlets.

Heat & defrost (d)

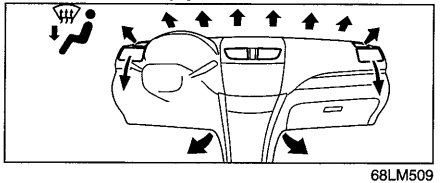

68LM509

Temperature-controlled air comes out of the floor outlets, the windshield defroster outlets, the side defroster outlets and the side outlets.

Defrost (e)

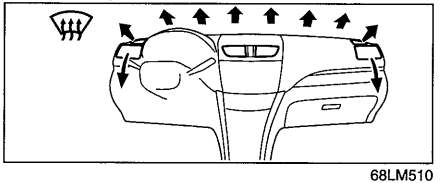

68LM510

Temperature-controlled air comes out of the windshield defroster outlets, the side defroster outlets and the side outlets.

Air intake selector (4)

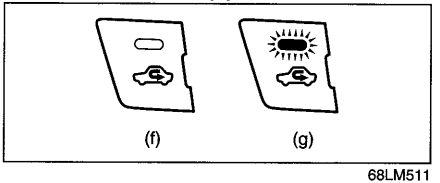

68LM511

This selector is used to select the following modes.

Fresh Air (f)
When this mode is selected, the indicator light will go off and outside air is used.

Recirculated Air (g)
When this mode is selected, the indicator light will come on, outside air is shut out and inside air is recirculated. This mode is suitable when driving through dusty or polluted air such as in a tunnel, or when attempting to quickly cool down the interior.

"FRESH AIR" and "RECIRCULATED AIR" are switched alternately each time the air intake selector is pushed.

NOTE:
If you select "RECIRCULATED AIR" for an extended period of time, the air in the vehicle can become contaminated. Therefore, you should occasionally select "FRESH AIR".

System Operating Instructions

Natural ventilation
Select "VENTILATION" and "FRESH AIR", the temperature selector to the desired temperature position, and the blower speed selector to "OFF". Fresh air will flow through the vehicle during driving.

Forced ventilation
The control settings are the same as for natural ventilation except you set the blower speed selector to a position other than "OFF".

Normal heating (using outside air)
Select "HEAT" and "FRESH AIR", the temperature selector to the desired temperature position and the blower speed selector to the desired blower speed position. Setting the blower speed selector to a higher blower speed position increases heating efficiency.

Quick heating (using recirculated air)
The control settings are the same as for normal heating except you select "RECIRCULATED AIR". If you use this heating method for an extended period of time, the air in the vehicle can become contaminated and the windows can become misty. Therefore, use this method only for quick heating and change to the normal heating method as soon as possible.

Head cooled/Feet warmed heating
Select "BI-LEVEL" and "FRESH AIR", the temperature selector to the desired tem-

perature position, and the blower speed selector to the desired blower speed position. Unless the temperature selector is in the fully COLD position or fully HOT position, the air that comes out of the center and side outlets will be cooler than the air that comes out of the floor outlets.

Defrosting/Feet warmed heating
Select "HEAT & DEFROST" and "FRESH AIR", the temperature selector to the desired temperature position, and the blower speed selector to HIGH. When the windshield has become clear, set the blower speed selector to the desired blower speed position.

Defrosting
Select "DEFROST" and "FRESH AIR", the temperature selector to the desired temperature position (higher temperature provides more efficient defrosting), and the blower speed selector to HIGH. When the windshield has become clear, set the blower speed selector to the desired blower speed position.

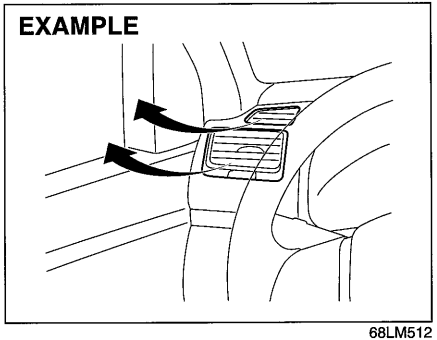

68LM512

NOTE:
If you need maximum defrosting, adjust the temperature selector to the HOT end and adjust the side outlets so the air blows on the side window, in addition to the above ***Defrosting*** *steps.*

Manual Heating and Air Conditioning System

Description of Controls

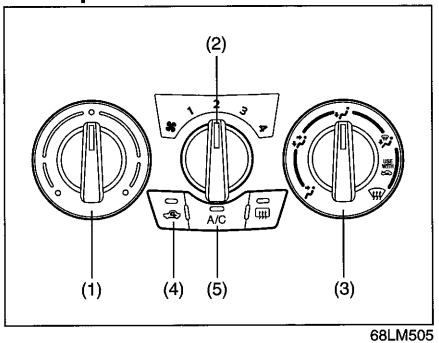

68LM505

Temperature selector (1)
This is used to select the temperature by turning the selector.

Blower speed selector (2)
This is used to turn on the blower and to select blower speed by turning the selector.

Air flow selector (3)

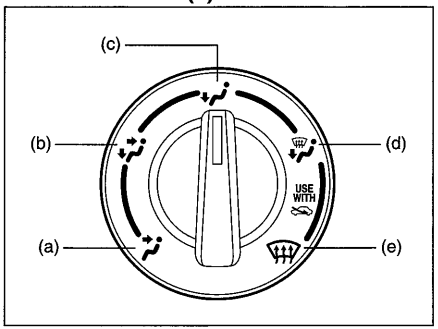

63J048

This is used to select one of the functions described below.

Ventilation (a)

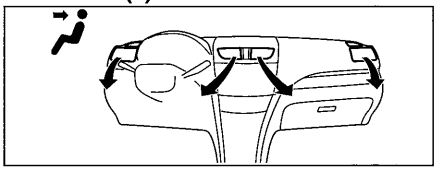

68LM506

Temperature-controlled air comes out of the center and side air outlets.

Bi-level (b)

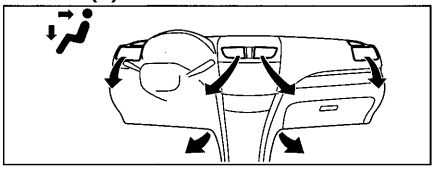

68LM507

Temperature-controlled air comes out of the floor outlets and cooler air comes out of the center and side outlets. When the temperature selector (1) is in the fully COLD position or fully HOT position, however, the air from the floor outlets and the air from the center and side outlets will be the same temperature.

Heat (c)

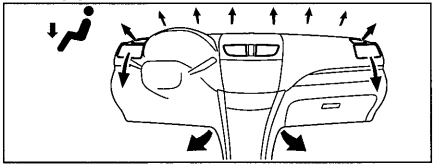

68LM508

Temperature-controlled air comes out of the floor outlets and the side outlets, also comes out of the windshield defroster outlets and also comes slightly out of the side defroster outlets.

Heat & defrost (d)

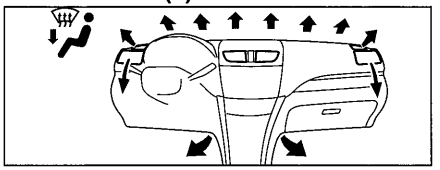

68LM509

Temperature-controlled air comes out of the floor outlets, the windshield defroster outlets, the side defroster outlets and the side outlets.

Defrost (e)

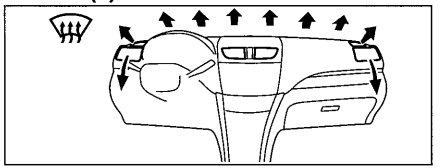

68LM510

Temperature-controlled air comes out of the windshield defroster outlets, the side defroster outlets and the side outlets.

Air intake selector (4)

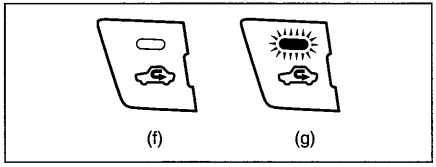

68LM511

This selector is used to select the following modes.

Fresh Air (f)
When this mode is selected, the indicator light will go off and outside air is used.

Recirculated Air (g)
When this mode is selected, the indicator light will come on, outside air is shut out and inside air is recirculated. This mode is suitable when driving through dusty or polluted air such as in a tunnel, or when attempting to quickly cool down the interior.

"FRESH AIR" and "RECIRCULATED AIR" are switched alternately each time the air intake selector is pushed.

NOTE:
If you select "RECIRCULATED AIR" for an extended period of time, the air in the vehicle can become contaminated. Therefore, you should occasionally select "FRESH AIR".

Air conditioning switch (5)
To turn on the air conditioning system, set the blower speed selector to a position other than "OFF" and push in the "A/C" switch. With this "A/C" switch operation, a indicator light will come on when the air conditioning system is on. To turn off the air conditioning system, push the "A/C" switch again.

During operation of the air conditioner, you may notice slight changes in engine speed. These changes are normal, the system is designed so that the compressor turns on or off to maintain the desired temperature.

Less operation of the compressor results in better fuel economy.

System Operating Instructions

Natural ventilation
Select "VENTILATION" and "FRESH AIR", the temperature selector to the desired temperature position, and the blower speed selector to "OFF". Fresh air will flow through the vehicle during driving.

Forced ventilation
The control settings are the same as for natural ventilation except you set the blower speed selector to a position other than "OFF".

Normal heating (using outside air)
Select "HEAT" and "FRESH AIR", the temperature selector to the desired temperature position and the blower speed selector to the desired blower speed position. Setting the blower speed selector to a higher blower speed position increases heating efficiency.

Quick heating (using recirculated air)
The control settings are the same as for normal heating except you select "RECIRCULATED AIR". If you use this heating method for an extended period of time, the air in the vehicle can become contaminated and the windows can become misty. Therefore, use this method only for quick heating and change to the normal heating method as soon as possible.

Head cooled/Feet warmed heating
Select "BI-LEVEL" and "FRESH AIR", the temperature selector to the desired temperature position, and the blower speed selector to the desired blower speed position. Unless the temperature selector is in the fully COLD position or fully HOT position, the air that comes out of the center and side outlets will be cooler than the air that comes out of the floor outlets.

Normal cooling
Set the air flow selector to "VENTILATION", the temperature selector to the desired temperature position and the blower speed selector to the desired blower speed position, and turn on the "A/C" switch. Setting the blower speed selector to a higher blower speed position increases cooling efficiency.

You can switch the air intake selector to either "FRESH AIR" or "RECIRCULATED AIR" as you desire. Choosing "RECIRCULATED AIR" increases cooling efficiency.

Quick cooling (using recirculated air)
The control settings are the same as for normal cooling except you select "RECIRCULATED AIR" and the highest blower speed.

NOTE:
- *If you select "RECIRCULATED AIR" for an extended period of time, the air in the vehicle can become contaminated. Therefore, you should occasionally select "FRESH AIR".*
- *If your vehicle has been left in the sun with the windows closed, it will cool faster if you open the windows briefly while you operate the air conditioner with the air intake selector at "FRESH AIR" and the blower at high speed.*

Dehumidifying
Set the air flow selector to a desired air flow selector position, the temperature selector to the desired temperature position and the blower speed selector to the desired blower speed position. Also select "FRESH AIR" and turn on the "A/C" switch.

NOTE:
Because the air conditioner dehumidifies the air, turning it on will help keep the windows clear, even when blowing heated air using the "DEFROST" or "HEAT & DEFROST" functions.

EXAMPLE

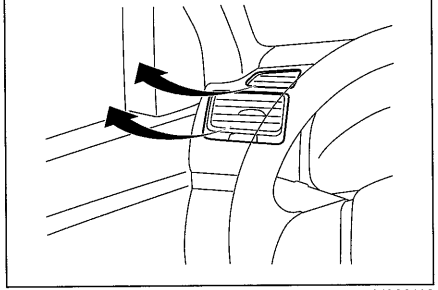

68LM512

NOTE:
If you need maximum defrosting:
- *select "DEFROST" and "FRESH AIR",*
- *set the blower speed selector to HIGH,*
- *adjust the temperature selector to the HOT end,*
- *turn on the "A/C" switch, and*
- *adjust the side outlets so the air blows on the side windows.*

Maintenance

If you do not use the air conditioner for a long period, such as during winter, it may not give the best performance when you start using it again. To help maintain optimum performance and durability of your air conditioner, it needs to be run periodically. Operate the air conditioner at least once a month for one minute with the engine idling. This circulates the refrigerant and oil and helps protect the internal components.

Your air conditioner is equipped with air filters. Clean or replace them as specified in the "Maintenance Schedule" in the "INSPECTION AND MAINTENANCE" section. Have this job done by your SUZUKI dealer as the lower glove box must be lowered for this job.

NOTE:
Your vehicle uses the air conditioning refrigerant HFC-134a, commonly called "R-134a". R-134a replaced R-12 around 1993 for automotive applications. Other refrigerants are available, including recycled R-12, but only R-134a should be used in your vehicle.

NOTICE

Using the wrong refrigerant may damage your air conditioning system. Use R-134a only. Do not mix or replace the R-134a with other refrigerants.

Automatic Heating and Air Conditioning System (Climate Control)

Description of Controls

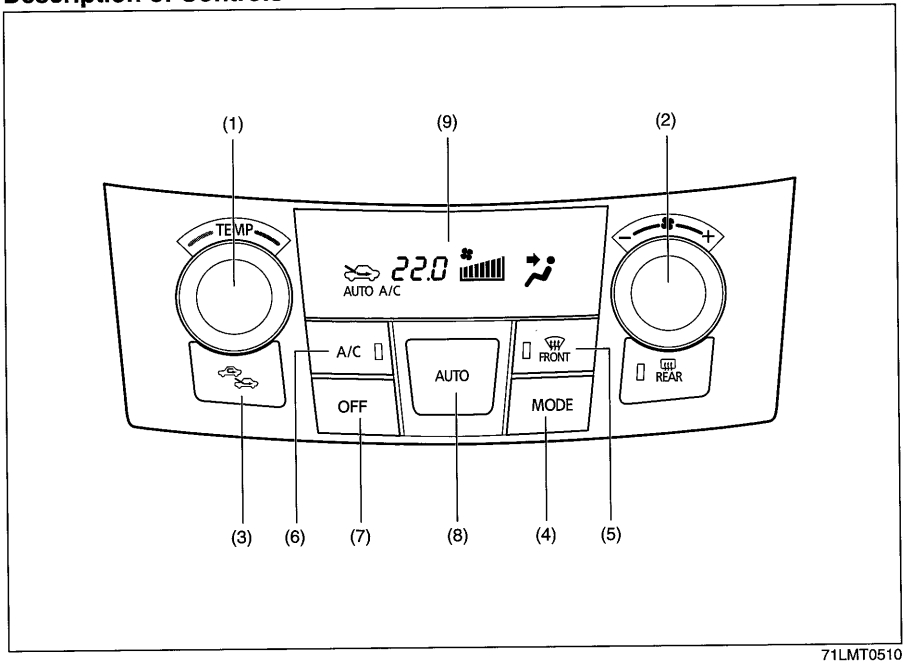

71LMT0510

(1) Temperature selector
(2) Blower speed selector
(3) Air intake selector
(4) Air flow selector
(5) Defrost switch
(6) Air conditioning switch
(7) "OFF" switch
(8) "AUTO" switch
(9) Display

Temperature selector (1)

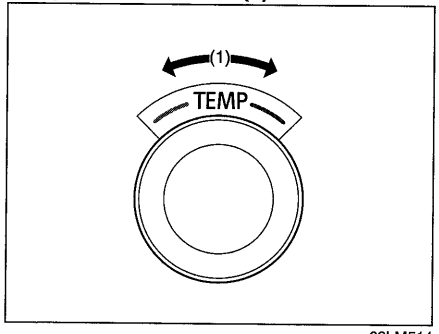

68LM514

Turn the temperature selector (1) to adjust the temperature.

Blower speed selector (2)

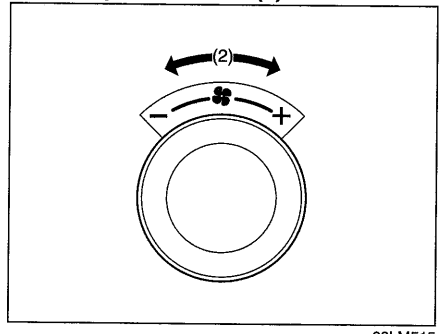

68LM515

The blower speed selector (2) is used to turn on the blower and to select blower speed.

If the "AUTO" switch (8) is pushed, the blower speed will vary automatically as the climate control system maintains the selected temperature.

Air intake selector (3)

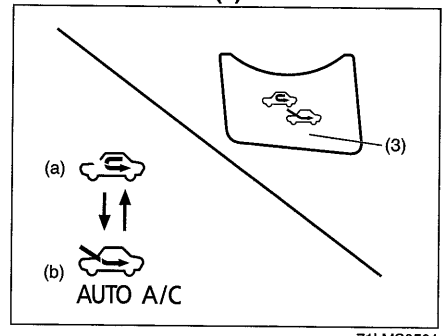

71LMS0501

Push the air intake selector (3) to change between the following modes.

If the "AUTO" switch (8) is pushed, the air intake will vary automatically as the climate control system maintains the selected temperature.

NOTE:
When you select the recirculated air mode, the automatic operation system is deactivated if you push the "AUTO" switch (8).

RECIRCULATED AIR (a)
When this mode is selected, outside air is shut off and inside air is recirculated. This mode is suitable when driving through an area with polluted air such as a tunnel, or when attempting to quickly cool down the vehicle.

FRESH AIR (b)
When this mode is selected, outside air is introduced.

"FRESH AIR" and "RECIRCULATED AIR" are selected alternately each time the air intake selector is pushed.

NOTE:
If you select "RECIRCULATED AIR" for an extended period of time, the air in the vehicle can become contaminated. Therefore, you should occasionally select "FRESH AIR".

Air flow selector (4)

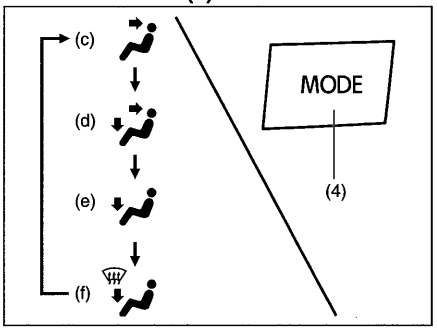

68LM517

Push the air flow selector (4) to change among the following functions. The indication of the selected mode appears on the display.

If the "AUTO" switch (8) is pushed, the air flow will vary automatically as the climate control system maintains the selected temperature.

Ventilation (c)

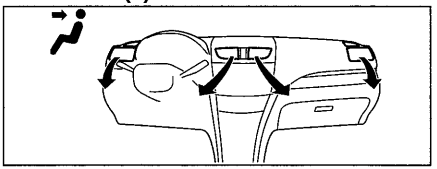

68LM506

Temperature-controlled air comes out of the center and side air outlets.

Bi-level (d)

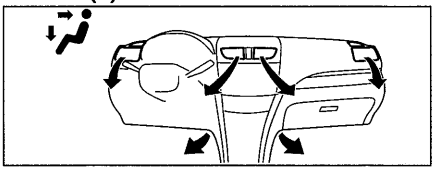

68LM507

Temperature-controlled air comes out of the floor outlets and cooler air comes out of the center and side outlets. When the temperature selector (1) is in the fully COLD position or fully HOT position, however, the air from the floor outlets and the air from the center and side outlets will be the same temperature.

Heat (e)

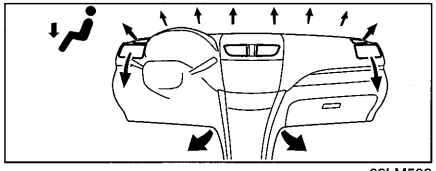

68LM508

Temperature-controlled air comes out of the floor outlets and the side outlets, a small amount of air comes out of the windshield defroster outlets and also comes slightly out of the side defroster outlets.

Heat & defrost (f)

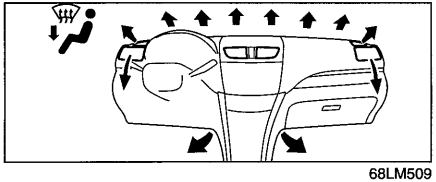

68LM509

Temperature-controlled air comes out of the floor outlets, the windshield defroster outlets, the side defroster outlets and the side outlets.

Defrost switch (5)

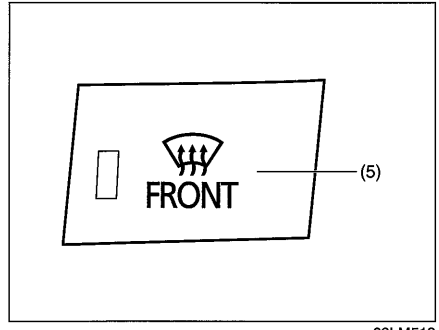

68LM518

Push the defrost switch (5) to turn on the defroster.

Defrost

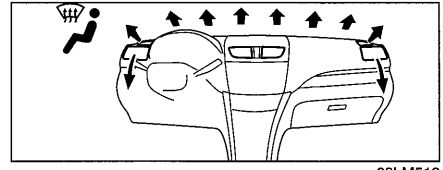

68LM519

Temperature-controlled air comes out of the windshield defroster outlets, the side defroster outlets and the side outlets.

NOTE:
When the defrost switch (5) is pushed to turn on the defroster, the air conditioning system will come on and the "FRESH AIR" mode will be selected automatically. In very cold weather, however, the air conditioning system will not turn on.

Air conditioning switch (6)

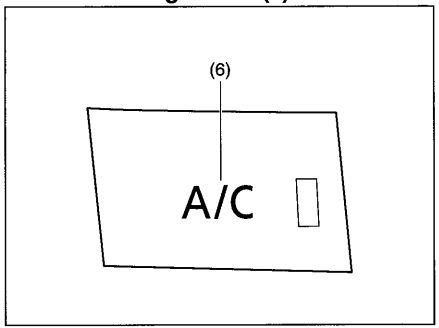

68LM555

The air conditioning switch (6) is used to turn on and off the air conditioning system only when the blower is on. To turn on the air conditioning system, push in the switch and "A/C" will appear on the display. To turn off the air conditioning system, push in the switch again and "A/C" will go off.

System Operating Instructions

Automatic operation

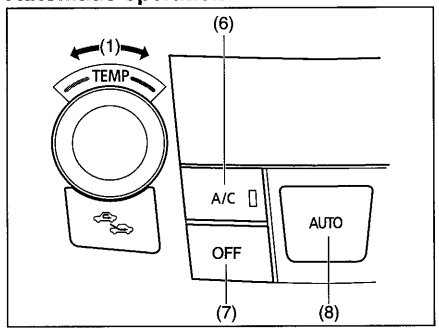

68LM520

You can let the climate control system work automatically. To set the system for fully-automatic operation, follow the procedure below.

1) Start the engine.
2) Push the "AUTO" switch (8).
3) Set the desired temperature by turning the temperature selector (1).

The blower speed, air intake and air flow are controlled automatically to maintain the set temperature.

NOTE:
When you select the recirculated air mode, the automatic operation system is deactivated if you push the "AUTO" switch (8).

You can use the air conditioning switch (6) to manually turn the air conditioner on or off according to your preference. When you turn the air conditioning switch off, the climate control system cannot lower the inside temperature below outside temperature.

To turn the climate control system off, push the "OFF" switch (7).

NOTE:
If the "AUTO" on the display blinks, there is a problem in the heating system and/or air conditioning system. You should have the system inspected by an authorized SUZUKI dealer.

NOTE:
- *To find the temperature at which you are most comfortable, start with the 22°C (72°F) setting.*
- *If you turn the temperature selector (1) until "HI" or "LO" appears on the display, the climate control system will operate at maximum heating or cooling and the blower will run at full speed.*
- *To avoid blowing cold air in cold weather or hot air in hot weather, the system will delay turning on the blower until warmed or chilled air is available.*
- *If your vehicle has been left in the sun with the windows closed, it will cool faster if you open the windows briefly.*

- *Even under the automatic operation, you can set individual selectors to the manual mode. The manually selected functions are maintained, and the other functions remain under automatic operation.*
- *To return the blower speed selector (2), air intake selector (3), and air flow selector (4) to automatic operation, push the "AUTO" switch (8).*

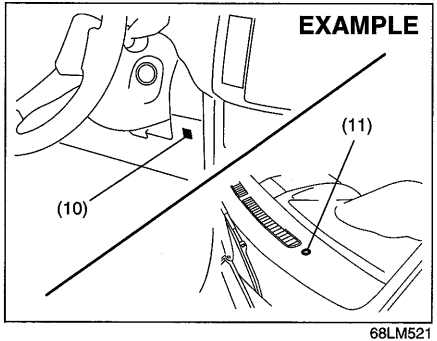

68LM521

Be careful not to cover the interior temperature sensor (10) located between the steering wheel and the climate control panel, or the solar sensor (11) located at the top of the driver's side dashboard. These sensors are used by the automatic system to regulate temperature.

Manual operation

You can manually control the climate control system. Set the selectors to the desired positions.

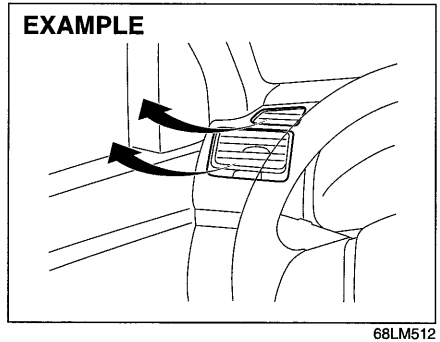

68LM512

NOTE:
If you need maximum defrosting:
- *push the defrost switch (5) to turn on the defroster (the air conditioning system will come on and the "FRESH AIR" mode will be selected automatically),*
- *set the blower speed selector to HIGH,*
- *adjust the temperature selector to the "HI" indication on the display, and*
- *adjust the side outlets so the air blows on the side windows.*

Maintenance

If you do not use the air conditioner for a long period, such as during winter, it may not give the best performance when you start using it again. To help maintain optimum performance and durability of your air conditioner, it needs to be run periodically. Operate the air conditioner at least once a month for one minute with the engine idling. This circulates the refrigerant and oil and helps protect the internal components.

Your air conditioner is equipped with air filters. Clean or replace them as specified in the "Maintenance Schedule" in the "INSPECTION AND MAINTENANCE" section. Have this job done by your SUZUKI dealer as the lower glove box must be lowered for this job.

NOTE:
Your vehicle uses the air conditioning refrigerant HFC-134a, commonly called "R-134a". R-134a replaced R-12 around 1993 for automotive applications. Other refrigerants are available, including recycled R-12, but only R-134a should be used in your vehicle.

NOTICE

Using the wrong refrigerant may damage your air conditioning system. Use R-134a only. Do not mix or replace the R-134a with other refrigerants.

Radio Antenna

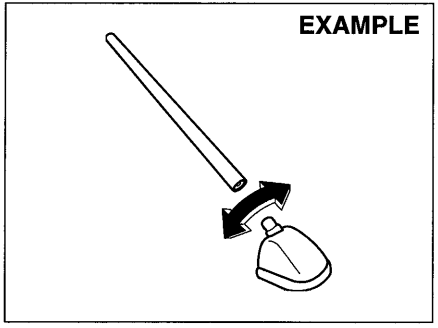

63J055

The radio antenna on the roof is removable. To remove the antenna, turn it counterclockwise. To reinstall the antenna, turn it clockwise firmly by hand.

NOTICE
To avoid damage to the radio antenna: • **Remove the antenna when using an automatic car wash.** • **Remove the antenna when the antenna hits anything such as a low ceiling in a parking garage or putting a car cover over your vehicle.**

NOTE:
There are 2 types of antennas according to the type of the vehicle. One is for FM/AM radio with length 180 mm, the other is for FM/AM radio+DAB with length 305 mm. There is difference of function between them.

Installation of Radio Frequency Transmitters

We recommend that you always ask a SUZUKI dealer about frequency band, max output power, antenna position at vehicle and specific conditions for installation and/or use before installing a radio transmitter in your vehicle. Such equipments may cause the electronic control system to malfunction if they are incorrectly installed or they are not suited for the vehicle.

Audio System

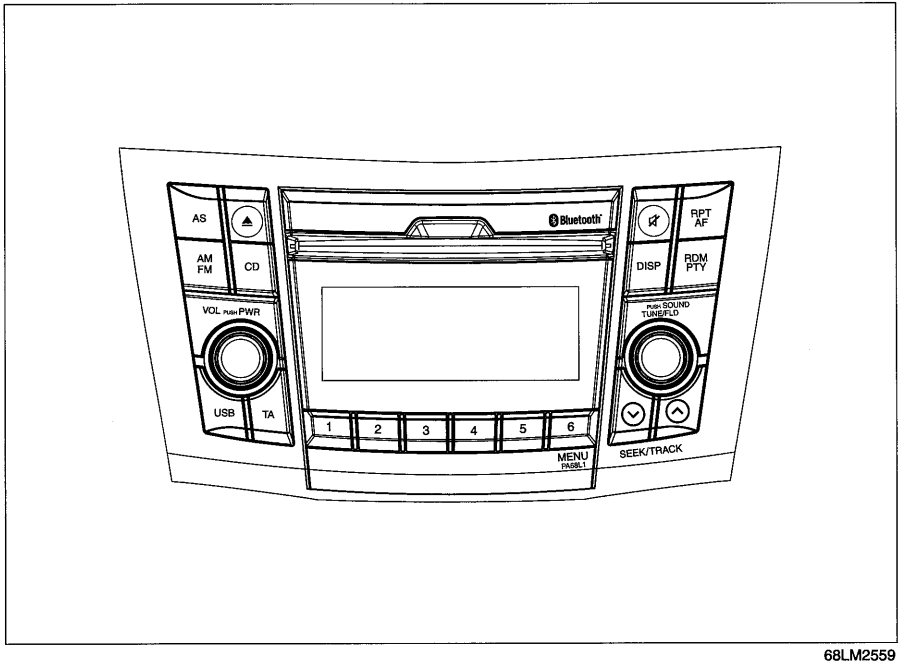

68LM2559

FM/LW/MW CD PLAYER

Safety Information

⚠ WARNING

- **The driver should neither watch the display nor operate the system while driving.**
  Watching the display or operating the system will distract the driver from looking ahead of the vehicle and can cause accidents. Always stop the vehicle in a safe location and use the parking brake before watching the display or operating the system. Failure to do so may cause trouble.

- **Keep the sound volume at an appropriate level.**
  Keep the volume level low enough to be aware of road and traffic conditions while driving.

Notes on Discs

Precautions

- When the inside of the vehicle is very cold and the player is used soon after switching on the heater, condensation may form on the disc or the optical parts of the player and proper playback may not be possible. If condensation forms on the disc, wipe it off with a soft cloth. If condensation forms on the optical parts of the player, do not use the player for about one hour. This will allow the condensation to disappear normally.
- Driving on extremely bumpy roads which cause severe vibrations may cause sound to skip.
- This unit uses a precision mechanism. Even in the event that trouble arises, never open the case, disassemble the unit, or lubricate the rotating parts. Please bring the unit to an authorized SUZUKI dealer.

Cautions on Handling

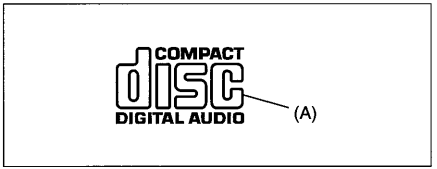

52D274

This unit has been designed specifically for playback of compact discs bearing mark (A) shown above.
No other discs can be played.

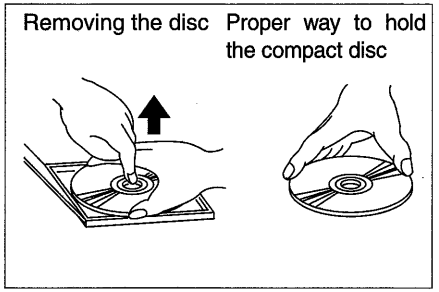

52D275

To remove the compact disc from its storage case, press down on the center of the case and lift the disc out, holding it carefully by the edges.

Always handle the compact disc by the edges.
Never touch the surface.

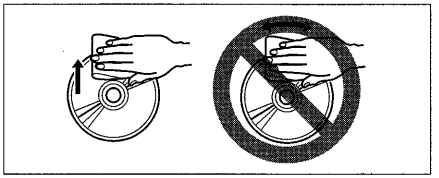

52D347

To remove fingermarks and dust, use a soft cloth, and wipe in a straight line from the center of the compact disc to the circumference.

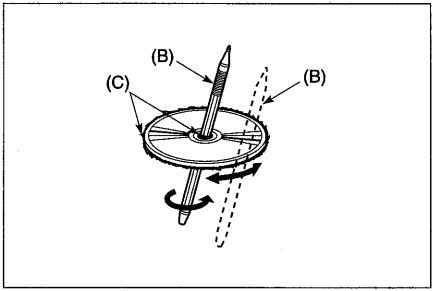

52D277

New discs may have some roughness around the edges. The unit may not work or the sound may skip if such discs are used. Use a ball-point pen (B), etc. to remove the roughness (C) from edges of the disc before inserting it into the unit.

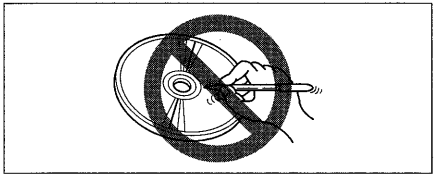

52D348

Never stick labels on the surface of the compact disc or write on the surface with a pencil or pen.

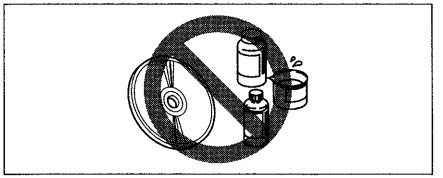

52D349

Do not use any solvents such as commercially available cleaners, anti-static spray, or thinner to clean compact discs.

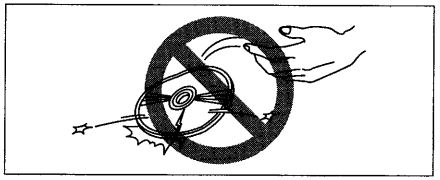

52D350

Do not use compact discs that have large scratches, are misshaped, or cracked, etc. Use of such discs will cause damage or prevent the system from operating properly.

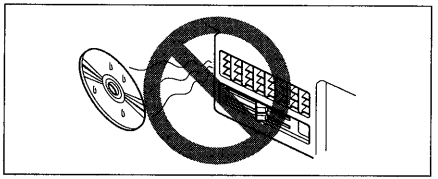

52D351

Do not expose compact discs to direct sunlight or any heat source.

NOTE:

- *Do not use commercially available CD protection sheets or discs equipped with stabilizers, etc.*
  These may get caught in the internal mechanism and damage the disc.
- *It may be impossible to play CD-R discs with this unit due to the recording conditions.*
- *CD-RW discs cannot be played with this unit.*

⚠ WARNING

Lazer product
This product is a class I laser product.
Use of controls or adjustments or performance of procedures other than those specified herein may result in hazardous radiation exposure.
Do not open covers and do not repair by yourself. Refer servicing to qualified personnel.

"Questo prodotto e' conforme al DM 28/8/1955, N.548, ottemperando alle prescrizioni di cui al DM 25/6/1985 (par. 3, All. A) e DM 27/8/1987 (All. I)."

Bluetooth®

The Bluetooth® word mark and logo are registered trademarks and are owned by the Bluetooth SIG, Ink.

⚠ WARNING

Keep away from the medical devices.
This unit and phones can interfere with the functioning of medical devices such as hearing aids or pacemakers.
Failure to observe this may arise the malfunction of medical devices resulting in personal injury or death.

Stop using this unit and a Bluetooth®-ready device whenever requested.
This unit shares the communication frequency with other private or public wireless communication equipment such as a wireless LAN and other wireless communication radios.
You should stop using this unit whenever you are notified that your unit disturbs other wireless communication immediately.

NOTE:
This equipment generates, uses and can radiate radio frequency energy and, if not installed and used in accordance with the instructions, may cause harmful interference to radio communications. However, there is no guarantee that interference will not occur in a particular installation. If this equipment does cause harmful interference to radio or television reception, which can be determined by turning the equipment off and on, the user is encouraged to try to correct the interference by one or more of the following measures:

- *Reorient or relocate the receiving antenna*
- *Increase the separation between the equipment and receiver.*
- *Connect the equipment into an outlet on a circuit different from that to which the receiver is connected.*
- *Consult the dealer or an experienced radio/TV technician for help. This transmitter must not be co-located or operated in conjunction with any other antenna or transmitter.*

Information on Disposal for Users of Waste Electrical & Electronic Equipment (private households)

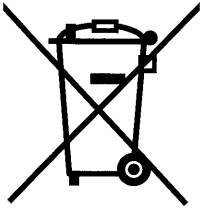

68LM560

This symbol on the products and/or accompanying documents means that used electrical and electronic products should not be mixed with general household waste.
For proper treatment, recovery and recycling, please take these products to designated collection points, where they will be accepted on a free of charge basis. Alternatively, in some countries you may be able to return your products to your local retailer upon the purchase of an equivalent new product.
Disposing of this product correctly will help to save valuable resources and prevent any potential negative effects on human health and the environment which could otherwise arise from inappropriate waste handling. Please contact your local authority for further details of your nearest designated collection point.
Penalties may be applicable for incorrect disposal of this waste, in accordance with national legislation.

For business users in the European Union
If you wish to discard electrical and electronic equipment, please contact your dealer or supplier for further information.

Information on Disposal in other Countries outside the European Union
This symbol is only valid in the European Union.
If you wish to discard this product, please contact your local authorities or dealer and ask for the correct method of disposal.

CE Declaration of Conformity (Doc)
"Hereby Panasonic Corporation, declares that this C5ZZZ0000040 is in compliance with the essential requirements and other relevant provision of Directive 1999/5/EC"

Basic Operations

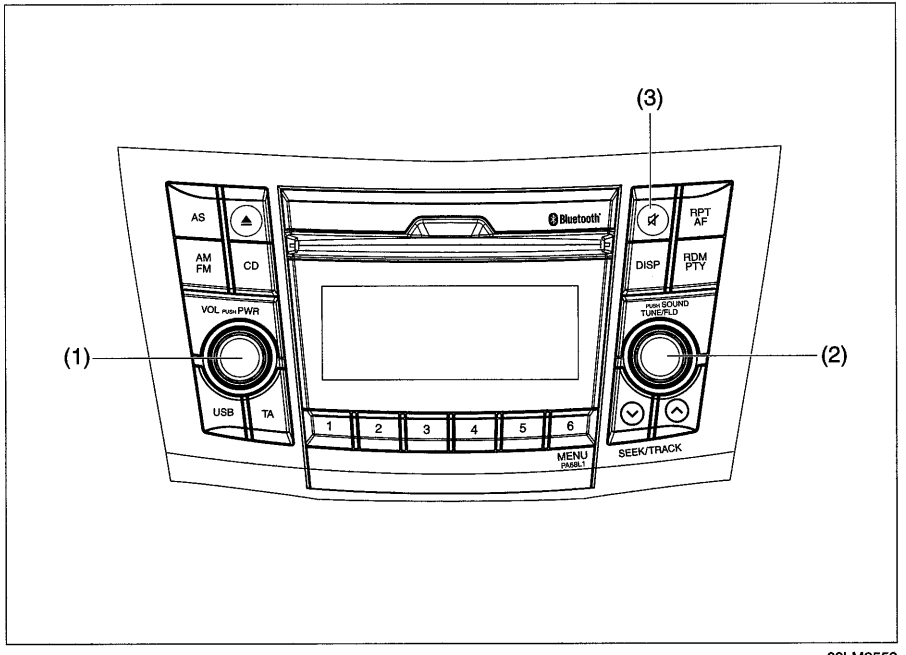

68LM2559

(1) VOL PUSH POWER knob
(2) TUNE FOLDER PUSH SOUND knob
(3) MUTE button

Turning power on/off

Press the VOL PUSH POWER knob (1).
The unit starts in the function mode it was in when the power was turned off last.

Adjusting the volume

Turn the VOL PUSH POWER knob (1).
Turning it clockwise increases the volume; turning it counterclockwise decreases the volume.

NOTE:
While driving, adjust the volume to an extent that sound and/or noise coming from outside the vehicle can be heard.

Mute

Press the MUTE button (3) to mute the sound.
To cancel the mute, press the MUTE button (3) again.

Adjusting bass/treble/balance/fader

1) Press the TUNE FOLDER PUSH SOUND knob (2).
   Each time the knob is pressed, sound adjustment will change as follows:

For standard specifications

Bass adjustment **(BASS 0)**
↓
Treble adjustment **(TREBLE 0)**
↓
Balance adjustment **(BALANCE 0)**
↓
Fader adjustment **(FADER 0)**
↓
AVC adjustment **(LEVEL 2)**

2) Turn the TUNE FOLDER PUSH SOUND knob (2) to adjust the sound.

Adjusting the AVC (Auto volume control)

The Auto Volume Control (AVC) function automatically adjusts (increases/decreases) the sound volume in accordance with vehicle speed. The AVC control is provided with three selectable levels (LEVEL OFF, 1, 2, 3). The range of volume adjustment increases together with the LEVEL number.

1) Press the TUNE FOLDER PUSH SOUND knob (2) until the AVC adjustment mode is selected.
2) Turn the TUNE FOLDER PUSH SOUND knob (2) to select the desired AVC adjustment level. (Initial setting: LEVEL 2)

Listening to the Radio

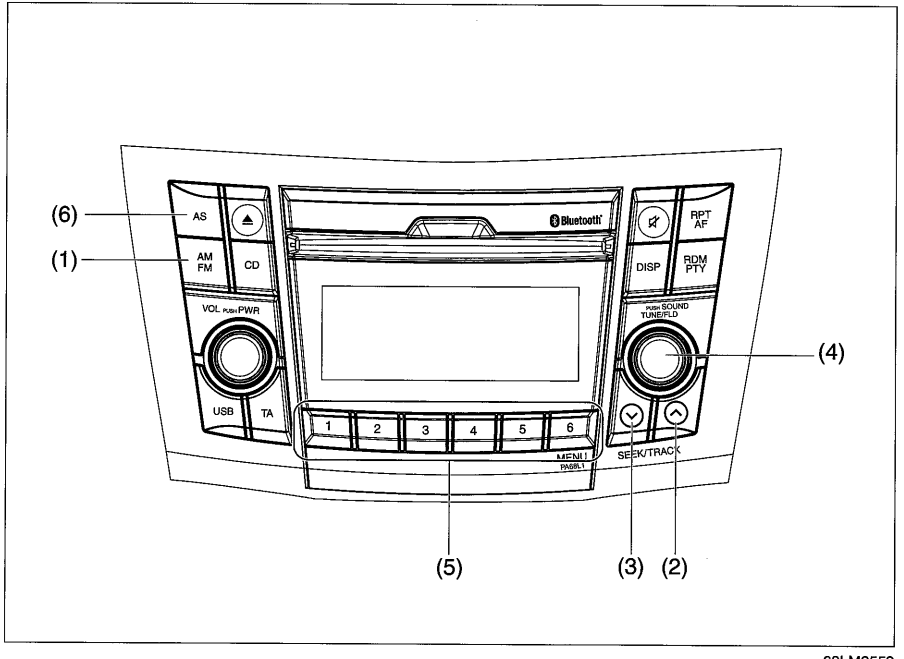

68LM2559

Display

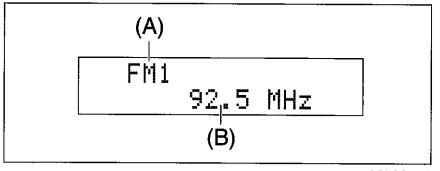

68LM561

(1) AM/FM button
(2) Up button
(3) Down button
(4) TUNE FOLDER PUSH SOUND knob
(5) Preset buttons ([1] to [6])
(6) AS button

(A) Band
(B) Frequency

Selecting the reception band
Press the AM/FM button (1).
Each time the button is pressed, the reception band will change as follows:

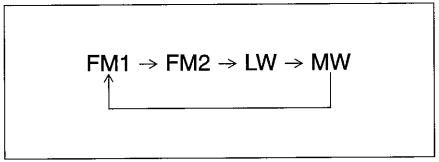

Seek tuning
Press the seek Up button (2) or the seek Down button (3).
The unit stops searching for a station at a frequency where a broadcast station is available.

NOTE:
If AF is ON, the unit searches for RDS stations only.

Manual tuning
Turn the TUNE FOLDER PUSH SOUND knob (4).
The frequency being received is displayed.

Preset memory
1) Select the desired station.
2) Hold down a desired button ([1] to [6]) of the Preset buttons (5) to which you want to store the station for 2 seconds or longer.

Auto store
Hold down the AS button (6) for 2 seconds or longer.
Six stations in good reception will automatically be stored to the Preset buttons (5) in order, starting from a station whose frequency is the lowest.

NOTE:
- *Auto store can be released by pressing AS button (6) while auto store is under way.*
- *When the auto store is performed, the station previously stored in the memory at the position is overwritten.*
- *When there are fewer than 6 stations that can be stored even if 1 round of auto store operation is performed, no station will be stored at the remaining Preset buttons (5).*
- *6 stations can be preset for FM1 and FM2 in common, and 6 stations for MW in auto store mode.*
- *If AF is ON, the unit searches for RDS stations only.*

Auto store mode on/off
Press the AS button (6).
Each time the button is pressed, the mode is switched as follows:

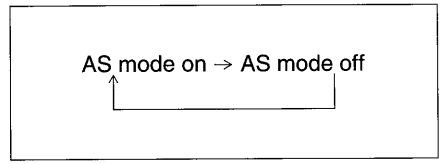

Radio Reception
Radio reception can be affected by environment, atmospheric conditions, or radio signal's power and distance from the station. Nearby mountains and buildings may interfere or deflect radio reception, causing poor reception. Poor reception or radio static can also be caused by electric current from overhead wires or high voltage power lines.

Using the RDS Functions

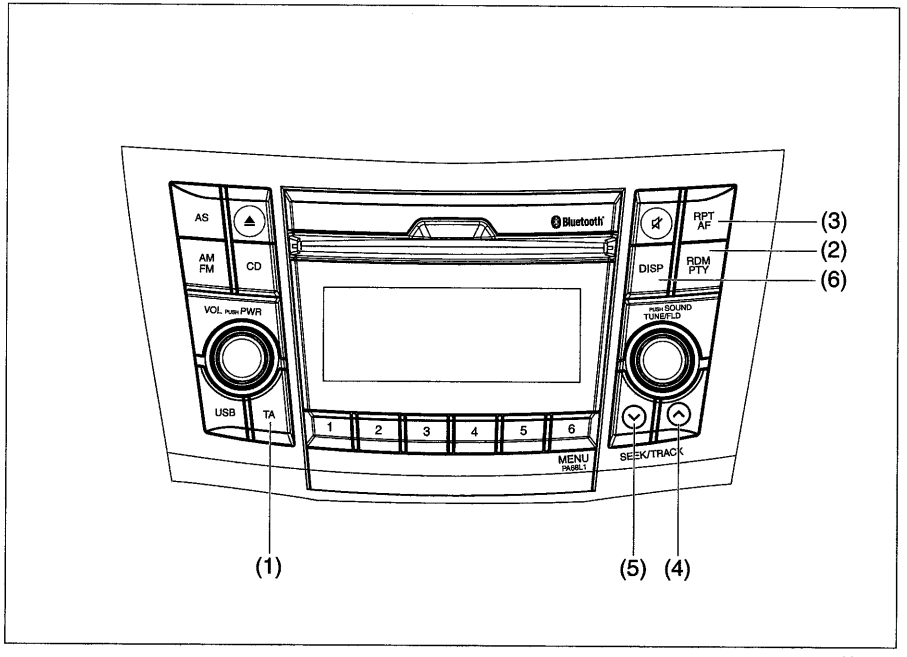

68LM2559

Display

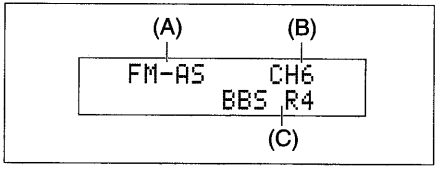

68LM562

(1) TA button
(2) RDM/PTY button
(3) RPT/AF button
(4) Up button
(5) Down button
(6) DISP button

(A) Band
(B) Channel number
(C) Programme service (PS) name

TA (Traffic Announcement) on/off

Press the TA button (1).

Each time it is pressed, TA adjustment is changed as follows:

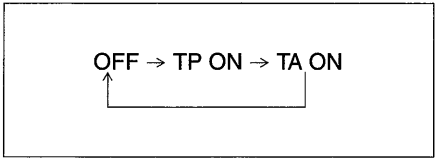

NOTE:

- *For listening to only traffic information, activate TA. Once traffic information starts, the volume changes automatically.*
- *The "TP" indicator lights up when TP (Traffic Programme) is ON. It blinks when no TP data is received.*
- *The "TA" indicator lights while TA is activated. On the other hand, the "TA" indicator blinks if the TP data cannot be received.*
- *If TP data is not received in about 20 seconds after TA or TP is turned on, TP SEEK automatically takes place.*
- *The TP seek is performed only once when TP is activated.*
- *The TP seek is performed again if the TP data cannot be received for 20 seconds with TA activated.*
- *If the Up button (4) or the Down button (5) is pressed while TA or TP is set to on the unit searches for a TP station.*
- *If no TP station is received, the unit displays "TP NOTHING".*

PTY (Program Type) search

1) Press the RDM/PTY button (2) to select PTY mode.
2) Press the RDM/PTY button (2) while PTY is displayed.
   Each time it is pressed, PTY adjustment is changed as follows:

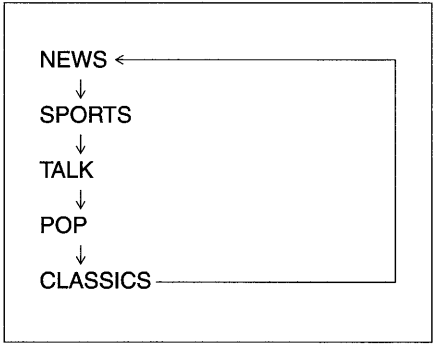

3) Press the Up button (4) or the Down button (5) while PTY is displayed.
   Search begins.

NOTE:

If no PTY information is received, the unit displays "NOPTY".

AF (Alternative Frequency) on/off

Press the RPT/AF button (3).

Each time it is pressed, AF adjustment is changed as follows:

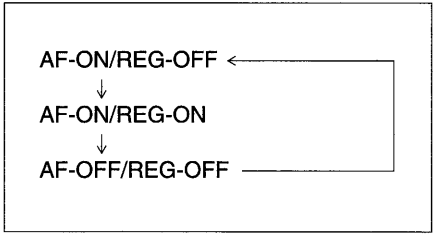

AF: If the reception condition becomes poor, the frequency of the same program with good reception is automatically searched.

REG: With regard to the automatically searched frequency with AF activated, the alternative frequency of the same program is searched with in the present region when REG is activated.

NOTE:

The "AF" indicator lights up when AF is ON. In addition to that, the "REG" indicator lights up when REG is ON.

TA Standby

At the moment traffic information is received while the source is set to CD, USB, iPod®, or Bluetooth®audio with TA activated, the source is automatically changed to radio. After reception of traffic information, the source immediately before radio resumes.

NOTE:
If no TP station can be received while the unit stands by for TA, it automatically searches for a TP station.

EON (Enhanced Other Network)

When the EON data is received with TP or TA activated, the "EON" indicator lights and the traffic information from a network other than the station now received is allowed to be received.

Emergency Announcement Reception

Emergency announcements are automatically received and displayed.

Listening to a CD

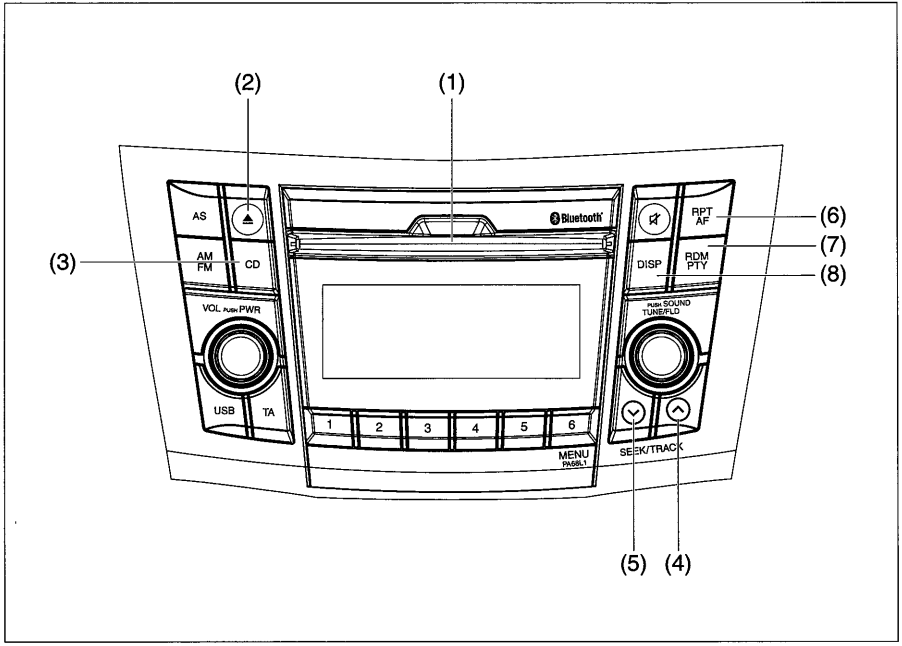

68LM2559

Display

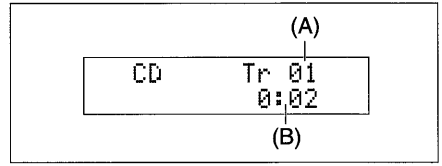

68LM563

(1) Insertion slot
(2) Eject button
(3) CD button
(4) Up button
(5) Down button
(6) RPT/AF button
(7) RDM/PTY button
(8) DISP button

(A) Track number
(B) Play time

NOTE:
This product does not support 8 cm CD (sometimes called as "mini single CD", "3-inch CD", "CD3", etc.).

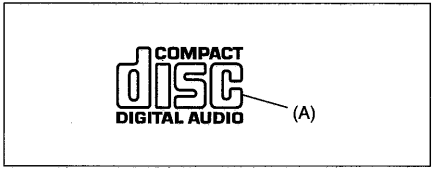

52D274

- CDs or CD-ROMs carrying no mark (A) cannot be used.
- Some discs recorded in CD-R/CD-RW format may sometimes be impossible to use.

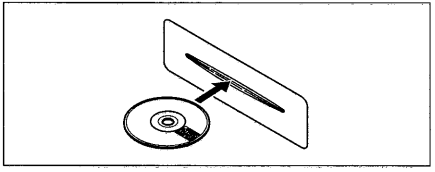

52D291

- A CD is to be inserted with its label side up.
- When there is a CD already in the unit, it is impossible to insert another CD without ejecting the CD in the unit. Do not use force to insert a CD into the CD insertion slot.

NOTICE

- **Never insert your finger or hand into the CD insertion slot. Never insert foreign objects.**
- **Never insert a CD with glue coming out from adhesive tape or a rental CD label or with a trace indicating that adhesive tape or a rental CD label has been removed. This may cause the CD not to eject or result in a malfunction.**

Selecting a CD mode

Press the CD button (3).

Each time the button is pressed, the mode will change as follows:

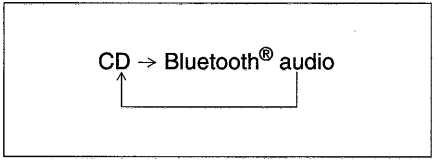

Loading a CD

Insert a CD in the Insertion slot (1).

When a CD is loaded, play starts.

Ejecting a CD

Press the Eject button (2).

When the ignition mode is "LOCK", the CD remained ejected for around 15 seconds or longer will automatically be drawn inside the unit. (Auto reload function)

The backup eject function:

This function allows you to eject a CD by pressing the Eject button (2) even when the ignition mode is off.

NOTICE

If you forcefully try to push an ejected CD inside the unit before auto reloading, the disc surface might be scratched.

When reloading a CD, remove it from the unit completely before reloading.

Listening to a CD

When a CD is inserted, playback will automatically start.

When a CD is already inside the unit, press the CD button (3) to start playback.

Selecting a track

- Press the Up button (4) to listen to the next track.
- Press the Down button (5) twice to listen to the previous track.
  When the Down button (5) is pressed once, the track currently being played will start from the beginning again.

Fast forwarding/Rewinding a track

- Hold down the Up button (4) to fast forward the track.
- Hold down the Down button (5) to fast rewind the track.

Random playback

Press the RDM/PTY button (7).
Each time the button is pressed, the mode will change as follows:

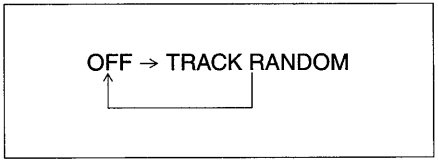

- TRACK RANDOM
  The random indicator "RDM" will light.
  The tracks in the loaded disc will be played in random order.

Repeat playback

Press the RPT/AF button (6).
Each time the button is pressed, the mode will change as follows:

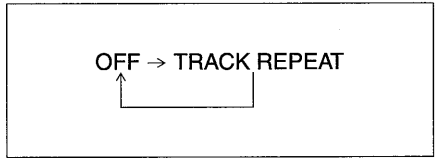

- TRACK REPEAT
  The repeat indicator "RPT" will light.
  The track currently being played will be played repeatedly.

Display change

Press the DISP button (8).
Each time the button is pressed, display will change as follows:

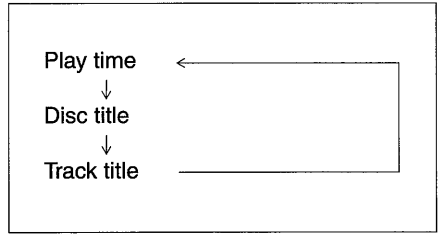

NOTE:

- *"NO TITLE" will be displayed when there is no text information in the disc currently being played.*
- *If text data contains more than 12 characters, the ">" mark will appear at the right end. Holding down the DISP button (8) for 1 second or longer can display the next page.*

Listening to an MP3/WMA Disc

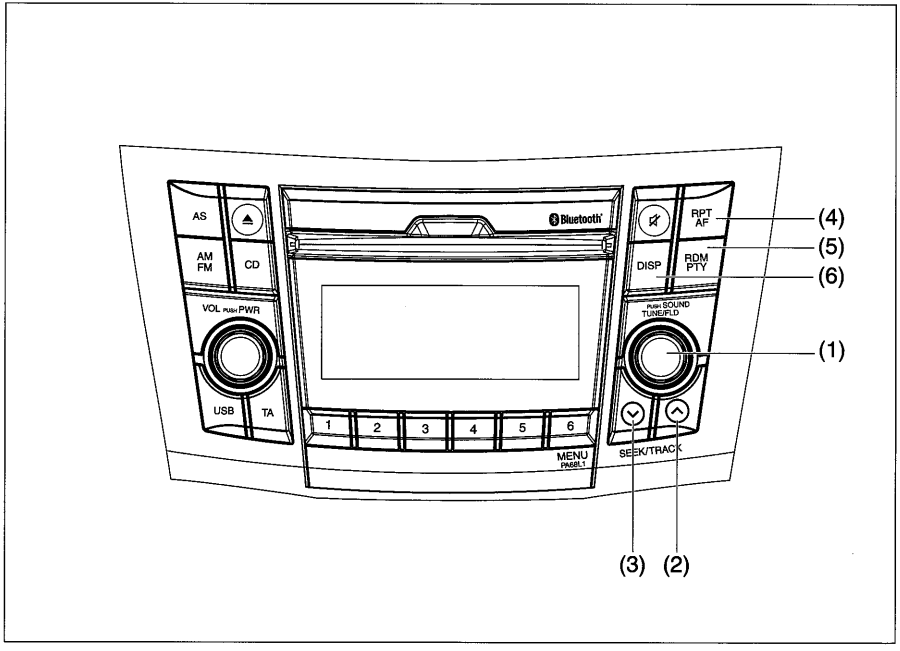

68LM2559

Display

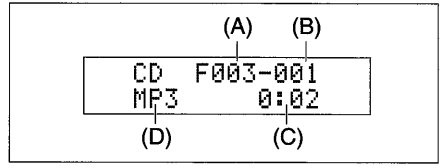

68LM564

(1) TUNE FOLDER PUSH SOUND knob
(2) Up button
(3) Down button
(4) RPT/AF button
(5) RDM/PTY button
(6) DISP button

(A) Folder number
(B) Track number
(C) Play time
(D) MP3/WMA indicator

Selecting a folder
Turn the TUNE FOLDER PUSH SOUND knob (1) to select a folder.

Selecting a track
- Press the Up button (2) to listen to the next track.
- Press the Down button (3) twice to listen to the previous track.
  When the Down button (3) is pressed once, the track currently being played will start from the beginning again.

Fast forwarding/Rewinding a track
- Hold down the Up button (2) to fast forward the track.
- Hold down the Down button (3) to fast rewind the track.

Random playback
Press the RDM/PTY button (5).
Each time the button is pressed, the mode will change as follows:

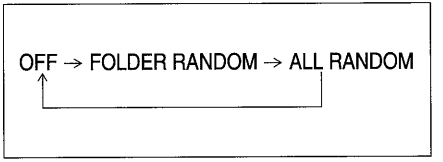

- FOLDER RANDOM
  The random indicator "RDM.F" will light.
  The tracks in the current folder will be played in random order.
- ALL RANDOM
  The random indicator "RDM" will light.
  The tracks in the loaded disc will be played in random order.

Repeat playback
Press the RPT/AF button (4).
Each time the button is pressed, the mode will change as follows:

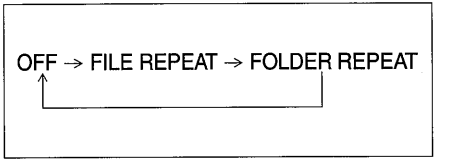

- FILE REPEAT
  The repeat indicator "RPT" will light.
  The track currently being played will be played repeatedly.
- FOLDER REPEAT
  The repeat indicator "RPT.F" will light.
  All tracks in the currently selected folder will be played repeatedly.

Display change

Press the DISP button (6).

Each time the button is pressed, display will change as follows:

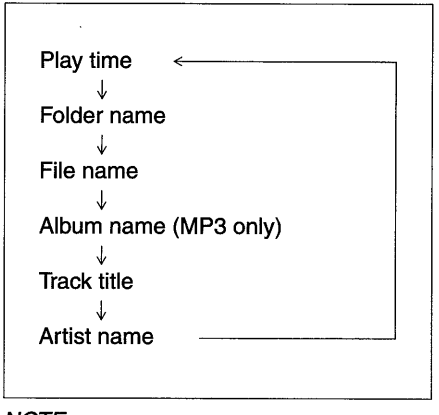

NOTE:

- *"NO TITLE" will be displayed when there is no text information in the disc currently being played.*
- *If text data contains more than 12 characters, the ">" mark will appear at the right end. Holding down the DISP button (6) for 1 second or longer can display the next page.*

Notes on MP3/WMA

What is MP3/WMA?

MP3 (MPEG1/2 Audio Layer-III) and WMA (Windows Media™ Audio) are the compression formats of digital audio. The former is developed by MPEG (Motion Picture Experts Group), and the latter is developed by Microsoft Corporation. Using these compression formats, you can record contents of about 10 music CDs on a single CD media (This figure refers to data recorded on a 650 MB CD-R or CD-RW at a fixed bit rate of 128 kbps and a sampling frequency of 44.1 kHz).

Points to remember when making MP3/WMA files

Common

- High bit rate and high sampling frequency are recommended for high quality sounds.
- Selecting VBR (Variable Bit Rate) is not recommended. Selecting VBR may cause display of incorrect playing time and jumpiness of playback.
- Playback sound quality varies depending on the encoding environment. For details, refer to the user manual of the encoding software and the writing software in use.

MP3

- It is recommended to set the bit rate to "128 kbps or more" and "fixed".

WMA

- It is recommended to set the bit rate to "64 kbps or more" and "fixed".
- Do not set the copy protect attribute on the WMA file to enable this unit to play back.

NOTE:
Never assign the ".mp3", or ".wma" file name extension to a file if it is not the MP3/WMA format file. Failure to observe this may not only result in damage to the speaker due to noise production but even have possibility to damage your hearing.

Recording MP3/WMA files on a CD media

- It is recommended not to write both CD-DA files and MP3/WMA files on a disc.
- If both CD-DA files and MP3/WMA files are on the same disc, tracks may not be played in the correct order or some tracks may not be played at all.
- When storing both MP3 data and WMA data on the same disc, sort and place them in different folders.
- Do not write files other than MP3/WMA files and unnecessary folders on a disc.
- MP3/WMA files should be named to meet the standards and the file system specifications as shown below.
- The file extension ".mp3" or ".wma" should be assigned to files based on their format independently.
- You may encounter a trouble in playing MP3/WMA files or displaying information of MP3/WMA files depending on the writing software or CD recorder in use.
- This unit does not have a play list function.
- It is recommended to write discs in Disc-at-Once mode even though Multi-session mode is supported.

Compression formats

MP3

- Bit rate:
  MPEG1 Audio Layer III : 64 k - 320 kbps
  MPEG2 Audio Layer III : 64 k - 160 kbps
- Sampling frequency:
  MPEG1 Audio Layer III : 32 k/44.1 k/48 kHz
  MPEG2 Audio Layer III : 16 k/22.05 k/24 kHz

WMA (Ver.7, Ver.8)

- Bit rate: CBR 48 k - 192 kbps
- Sampling frequency: 32 k/44.1 k/48 kHz

WMA (Ver. 9*)
- Bit rate: CBR 48 k - 320 kbps
- Sampling frequency: 32 k/44.1 k/48 kHz

* WMA 9 Professional/LossLess/Voice are not supported.

Supported file systems
ISO 9660 Level 1/Level 2, Joliet, Romeo

Maximum number of files/folders
- Maximum number of files: 512 (files + folders)
- Maximum number of files in a folder: 512
- Maximum depth of tree structure: 8
- Maximum number of folders: 255 (Root folder is included.)

Listening to files stored in a USB device

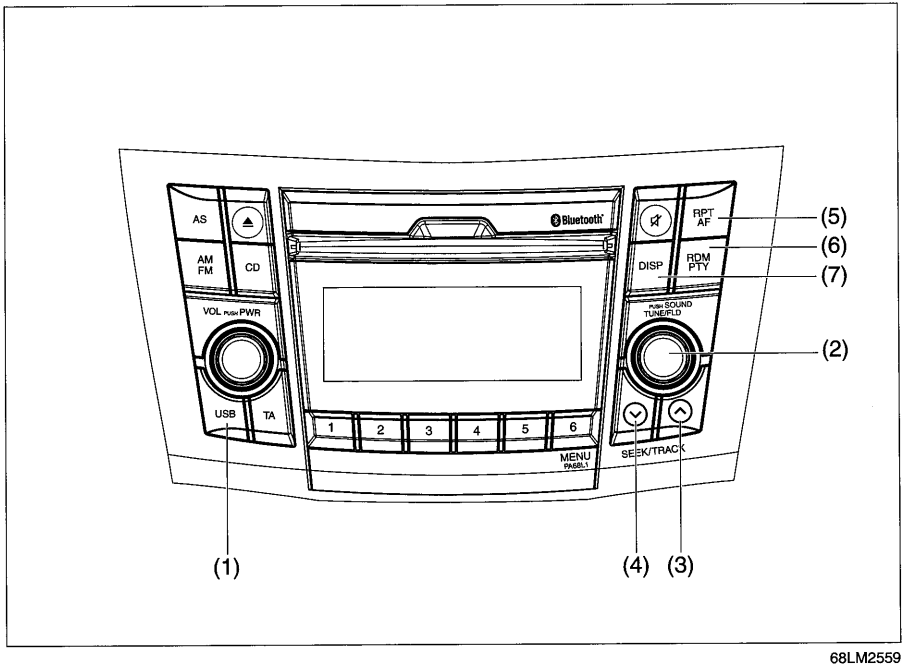

68LM2559

Display

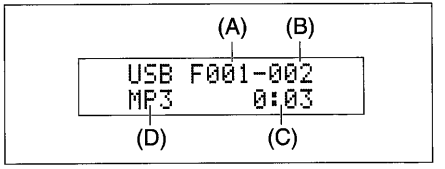

68LM565

(1) USB button
(2) TUNE FOLDER PUSH SOUND knob
(3) Up button
(4) Down button
(5) RPT/AF button
(6) RDM/PTY button
(7) DISP button

(A) Folder number
(B) Track number
(C) Play time
(D) MP3/WMA indicator

NOTICE

Do not connect any USB device other than a USB memory or a USB audio player. Do not connect multiple USB devices to the USB connector using a USB hub, etc. Supplying power to multiple USB devices from the connector could cause overheating and smoking.

Selecting a USB device mode
Press the USB button (1).

Selecting a folder
Turn the TUNE FOLDER PUSH SOUND knob (2) to select the desired folder.

Selecting a track
- Press the Up button (3) to listen to the next track.
- Press the Down button (4) twice to listen to the previous track.
  When the Down button (4) is pressed once, the track currently being played will start from the beginning again.

Fast forwarding/Rewinding a track
- Hold down the Up button (3) to fast forward the track.
- Hold down the Down button (4) to fast rewind the track.

Random playback
Press the RDM/PTY button (6).
Each time the button is pressed, the mode will change as follows:

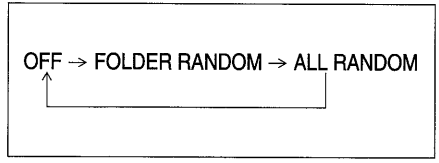

- FOLDER RANDOM
  The random indicator "RDM.F" will light.
  The tracks in the currently selected folder will be played in random order.
- ALL RANDOM
  The random indicator "RDM" will light.
  The tracks in the connected USB device will be played in random order.

Repeat playback
Press the RPT/AF button (5).
Each time the button is pressed, the mode will change as follows:

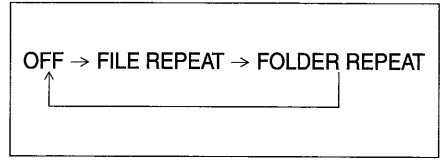

- FILE REPEAT
  The repeat indicator "RPT" will light.
  The track currently being played will be played repeatedly.
- FOLDER REPEAT
  The repeat indicator "RPT.F" will light.
  All the tracks in the folder currently selected will be played repeatedly.

Display change

Press the DISP button (7).

Each time the button is pressed, display will change as follows:

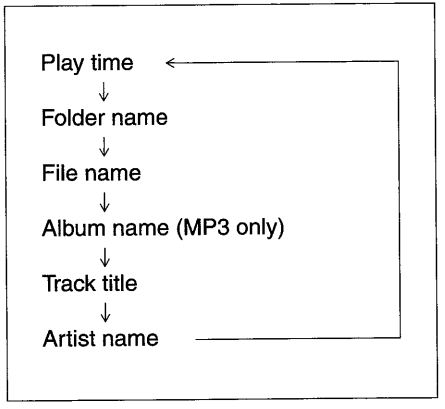

NOTE:

- *"NO TITLE" will be displayed when there is no text information in the disc currently being played.*
- *If text data contains more than 12 characters, the ">" mark will appear at the right end. Holding down the DISP button (7) for 1 second or longer can display the next page.*

Notes on USB device

Compatible USB devices

- USB Mass Storage Class
  For details as to whether your USB memory/USB Audio is compatible with USB Mass Storage Class, please contact the USB memory/USB Audio manufacturer.
- USB Standard Compatibility 1.1/2.0 Full Speed
- File System FAT16/32
- Maximum current less than 500 mA
- Capacity less than 4 GB (1 partition)

USB device connection

- When connecting a USB device, make sure that the connector is pushed all the way into the port.
- Do not leave the USB device for long periods of time in places inside the vehicle where the temperature can rise too high.
- Back up any important data beforehand. We cannot accept responsibility for any lost data.
- It is recommended not to connect a USB device that contains data files other than MP3/WMA format.

Recording MP3/WMA files on a USB device

- Playback or display may not be possible depending on the type of USB device in use or the condition of the recording.
- Depending on the connected USB memory, the files may be played in different order from the order that the files were stored.

Compression formats

MP3

- Bit rate:
  MPEG1 Audio Layer III : 64 k - 320 kbps
  MPEG2 Audio Layer III : 64 k - 160 kbps
- Sampling frequency:
  MPEG1 Audio Layer III : 32 k/44.1 k/48 kHz
  MPEG2 Audio Layer III : 16 k/22.05 k/24 kHz

WMA (Ver.7, Ver.8)

- Bit rate: CBR 48 k - 192 kbps
- Sampling frequency: 32 k/44.1 k/48 kHz

WMA (Ver. 9*)

- Bit rate: CBR 48 k - 320 kbps
- Sampling frequency: 32 k/44.1 k/48 kHz

* WMA 9 Professional/LossLess/Voice are not supported.

Maximum number of files/folders

- Maximum number of files: 2500 (files + folders)
- Maximum number of files in a folder: 255
- Maximum depth of tree structure: 8
- Maximum number of folders: 255 (Root folder is included.)

Listening to an iPod®

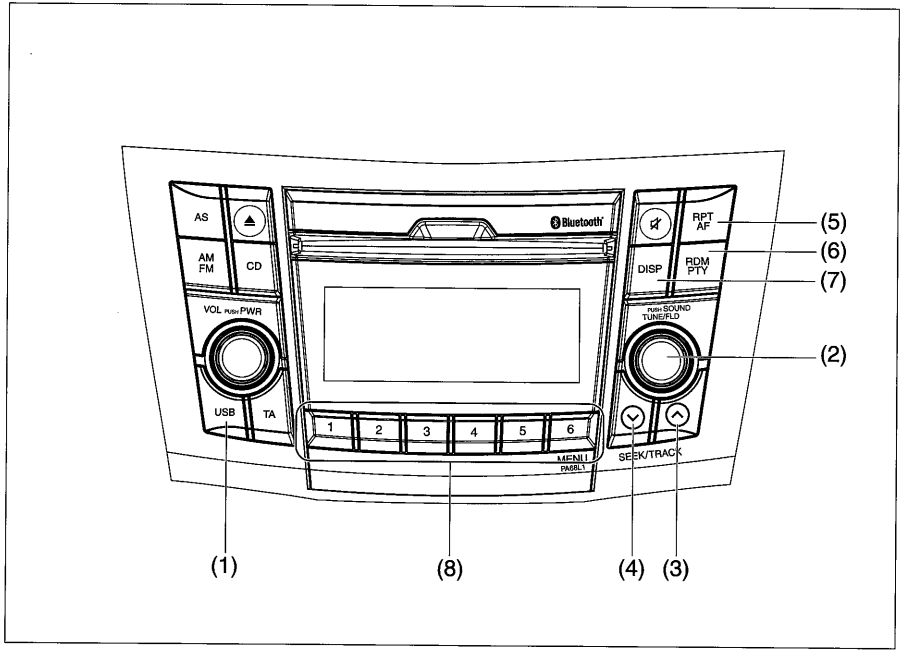

68LM2559

Display

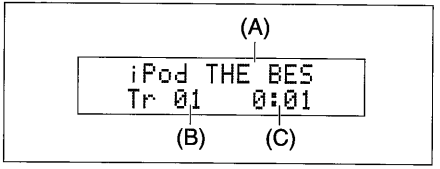

68LM566

(1) USB button
(2) TUNE FOLDER PUSH SOUND knob
(3) Up button
(4) Down button
(5) RPT/AF button
(6) RDM/PTY button
(7) DISP button
(8) Preset buttons ([1] to [6])

(A) Track title
(B) Track number
(C) Play time

Selecting an iPod® mode
Press the USB button (1).

Selecting a track
- Press the Up button (3) to listen to the next track.
- Press the Down button (4) twice to listen to the previous track.
  When the Down button (4) is pressed once, the track currently being played will start from the beginning again.

Fast forwarding/Rewinding a track
- Hold down the Up button (3) to fast forward the track.
- Hold down the Down button (4) to fast rewind the track.

Random playback
Press the RDM/PTY button (6).
Each time the button is pressed, the mode will change as follows:

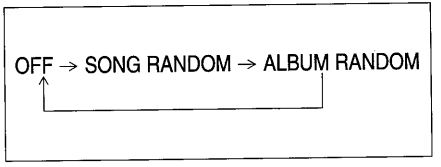

- SONG RANDOM
  The random indicator "RDM" will light.
  The tracks in the iPod® will be played in random order.
- ALBUM RANDOM
  The random indicator "D.RDM" will light.
  The albums in the iPod® will be played in random order.

Repeat playback
Press the RPT/AF button (5).
Each time the button is pressed, the mode will change as follows:

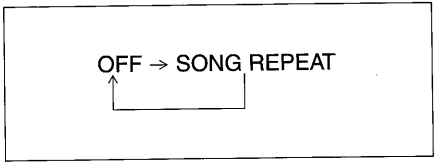

- SONG REPEAT
  The repeat indicator "RPT" will light.
  The track currently being played will be played repeatedly.

Display change

Press the DISP button (7).

Each time the button is pressed, display will change as follows:

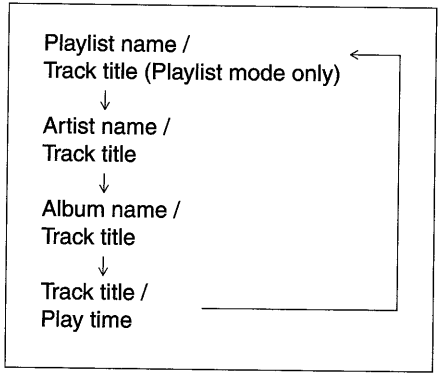

NOTE:

If text data contains more than 12 characters, the ">" mark will appear at the right end. Holding down the DISP button (7) for 1 second or longer can display the next page.

Playing Mode selection

1) Press the button numbered [6] of the Preset buttons (8) for 1 second or longer.
2) Turn the TUNE FOLDER PUSH SOUND knob (2).
   Each time the knob is turned, mode will change as follows:

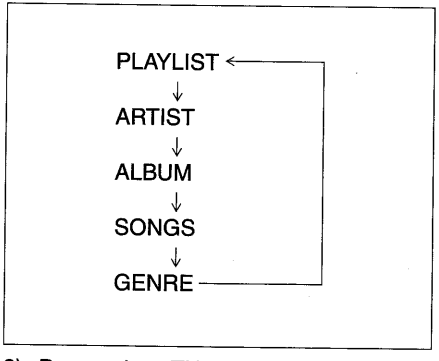

3) Press the TUNE FOLDER PUSH SOUND knob (2) to select the desired mode.

NOTE:

- *When the button numbered [6] of the Preset buttons (8) is pressed, the previous mode will be displayed.*

Notes on iPod®

Supported iPod®

- iPod® touch
- iPod® classic
- iPod® nano (4th generation)
- iPod® nano (3rd generation)
- iPod® nano (2nd generation)
- iPod® nano (1st generation)
- iPod® (5th generation)
- iPhone®
- iPhone® 3G

* Some functions may not be available depending on the model of iPod®.

* iPod® is a trademark of Apple Inc., registered in the U.S. and other countries.

* iPhone® is a trademark of Apple Inc., registered in the U.S. and other countries.

* Apple is not responsible for the operation of this device or its compliance with safety and regulatory standards.

iPod® connection

- Make sure to detach the iPod® after pressing the engine switch to change the ignition mode to LOCK. The iPod® may not be shut down when it is being connected and may result in battery depletion.
- Please do not connect iPod® accessories such as an iPod® remote control or headphones while connecting the iPod® with the unit. The unit may not operate correctly.

Change the audio output channel of the Bluetooth® hands-free device

Follow the instructions below to select the channel to output the playback, receiving voice and call from the Bluetooth® hands-free device. (Initial setting: LEFT)

1) Press the Off Hook button (7).
   The Bluetooth® main menu will appear.
2) Hold down the AS button (5) and press the button numbered [1] of the preset buttons (3) for 2 seconds or longer.
   The audio output channel currently selected will be displayed.
3) Turn the TUNE FOLDER PUSH SOUND knob (1) to select "RIGHT" (the right front speaker) or "LEFT" (the left front speaker) and press the TUNE FOLDER PUSH SOUND knob (1) to determine the selection.

No operation for 6 seconds or longer returns the unit to the previous mode.
(For example, when the Bluetooth® hands-free (HF) function is activated after pressing the Off Hook button (7) in the FM mode, the Bluetooth® hands-free (HF) function will be deactivated, and the unit will returns to the FM mode.)

NOTE:

- *Perform this operation while the car is stopping.*
- *When selecting "Go Back", the previous menu will appear.*
- *The selected audio output channel will be activated soon after step 3.*
- *Communication using the Bluetooth® hands-free (HF) function is available even while selecting the audio output channel in step 3.*
- *The audio output channel of the Bluetooth® hands-free device can be selected even while setting up the Bluetooth® audio mode.*

Adjusting the listening volume

- Turn the VOL PUSH POWER knob (2) during a call.
  Turning it clockwise increases the volume; turning it counterclockwise decreases the volume.
- Press the VOL switch (9) during a call.
  Pressing "+" of the switch increases the volume, pressing "-" of the switch decreases the volume.

Adjusting the ring volume

- Turn the VOL PUSH POWER knob (2) while a call coming in.
  Turning it clockwise increases the volume; turning it counterclockwise decreases the volume.
- Press the VOL switch (9) during a call.
  Pressing "+" of the switch increases the volume, pressing "-" of the switch decreases the volume.

Adjusting the playback volume

Follow the instructions below to adjust the playback volume.

1) Press the Off Hook button (7).
   The Bluetooth® main menu will be displayed.
2) Turn the TUNE FOLDER PUSH SOUND knob (1) to select "Setup", and press the knob (1) to determine the selection.
3) Turn the TUNE FOLDER PUSH SOUND knob (1) to select "System Setup", and press the knob (1) to determine the selection.
4) Turn the TUNE FOLDER PUSH SOUND knob (1) to select "Playback Vol", and press the knob (1) to determine the selection.
   The current playback volume will be displayed.
5) Turn the TUNE FOLDER PUSH SOUND knob (1) to select playback volume, and press the knob (1) to determine the selection.

NOTE:
When selecting "Go Back", the previous menu will be displayed.

Dialing using Redial/Callback

Follow the instructions below to dial to the last dialed number again.

NOTE:
Up to 5 phone numbers of the latest calls can be stored. (5 each for dialed and received).

1) Press the Off Hook button (7).
   The Bluetooth® main menu will be displayed.
2) Turn the TUNE FOLDER PUSH SOUND knob (1) to select "Redial" or "Callback", and press the knob (1) to determine the selection.
   To dial from the dialed history or the received history, select "Redial" or "Callback" respectively.
3) Turn the TUNE FOLDER PUSH SOUND knob (1) to select the desired number, and press the knob (1) to determine the selection.
4) Turn the TUNE FOLDER PUSH SOUND knob (1) to select "Dial", and press the knob (1) to dial to the selected number.

NOTE:
- *When selecting "Go Back", the previous menu will be displayed.*
- *Only a single press of the Off Hook button (7) in step 2 allows users to select "Redial".*
- *Pressing "Confirm" after selecting "Store" can register the selected number in the phonebook.*
- *Pressing "Confirm" after selecting "Delete" can delete the selected number from the call history.*

Registration in Phonebook

Registration of numbers in the phonebook

Follow the instructions below to register phone numbers in the Phonebook of the unit.

1) Press the Off Hook button (7).
   The Bluetooth® main menu will be displayed.
2) Turn the TUNE FOLDER PUSH SOUND knob (1) to select "Phonebook", and press the knob (1) to determine the selection.
3) Turn the TUNE FOLDER PUSH SOUND knob (1) to select "Add Entry", and press the knob (1) to determine the selection.
4) Turn the TUNE FOLDER PUSH SOUND knob (1) to select "By Phone", "Manual Input" or "Call History", and press the knob (1) to determine the selection.
   "By Phone": Registers through the phone.
   "Manual Input": Registers by entering numbers using the TUNE FOLDER PUSH SOUND knob (1).
   "Call History": Registers from the dialed/received history.
5) Turn the TUNE FOLDER PUSH SOUND knob (1) to select "Record Name", and press the knob (1) to determine the selection.
6) Pronounce a registered name.
7) Turn the TUNE FOLDER PUSH SOUND knob (1) to select "Confirm", and press the knob (1) to complete the registration.

NOTE:

- *When selecting "Go Back" the previous menu will be displayed.*
- *Up to 20 numbers can be registered in Phonebook.*

Name change (Change Name)

Follow the instructions below to change a name assigned to a number registered in phonebook.

1) Press the Off Hook button (7).
   The Bluetooth® main menu will be displayed.
2) Turn the TUNE FOLDER PUSH SOUND knob (1) to select "Phonebook", and press the knob (1) to determine the selection.
3) Turn the TUNE FOLDER PUSH SOUND knob (1) to select "Change Name", and press the knob (1) to determine the selection.
4) Turn the TUNE FOLDER PUSH SOUND knob (1) to select a number to be changed, and press the knob (1) to determine the selection.
5) Turn the TUNE FOLDER PUSH SOUND knob (1) to select "Record Name", and press the knob (1) to determine the selection.
6) Pronounce the name to be used for voice recognition.
7) Turn the TUNE FOLDER PUSH SOUND knob (1) to select "Confirm", and press the knob (1) to determine the selection.

NOTE:
When selecting "Go Back", the previous menu will be displayed.

Making a call by Phonebook

Follow the instructions below to dial a number registered in Phonebook.

1) Press the Off Hook button (7).
   The Bluetooth® main menu will be displayed.
2) Turn the TUNE FOLDER PUSH SOUND knob (1) to select "Phonebook", and press the knob (1) to determine the selection.
3) Turn the TUNE FOLDER PUSH SOUND knob (1) to select "List Names", and press the knob (1) to determine the selection.
   The registered numbers will be displayed in sequence.
   If names have been registered together with numbers, the names will be displayed.
4) Press the Off Hook button (7).
   The displayed number or the number registered with the displayed name will be dialed.

Deletion of registered data (Delete Entry)

Follow the instructions below to delete a number registered in Phonebook.

1) Press the Off Hook button (7).
   The Bluetooth® main menu will be displayed.
2) Turn the TUNE FOLDER PUSH SOUND knob (1) to select "Phonebook", and press the knob (1) to determine the selection.
3) Turn the TUNE FOLDER PUSH SOUND knob (1) to select "Delete Entry", and press the knob (1) to determine the selection.
4) Turn the TUNE FOLDER PUSH SOUND knob (1) to select a number to be deleted, and press the knob (1) to determine the selection.
5) Turn the TUNE FOLDER PUSH SOUND knob (1) to select "Confirm", and press the knob (1) to complete the deletion.

NOTE:
When selecting "Go Back", the previous menu will be displayed.

Registration in speed dial

Follow the instructions below to assign a number to one of the Preset buttons to use as the speed dial.

1) Press the Off Hook button (7).
   The Bluetooth® main menu will be displayed.
2) Turn the TUNE FOLDER PUSH SOUND knob (1) to select "Phonebook", and press the knob (1) to determine the selection.
3) Turn the TUNE FOLDER PUSH SOUND knob (1) to select "Speed Dial", and press the knob (1) to determine the selection.
4) Turn the TUNE FOLDER PUSH SOUND knob (1) to select a number to be assigned, and press the knob (1) to determine the selection.
5) Press one of the Preset buttons (3) to which the selected number is to be assigned.
   If a number is already assigned to the selected button, a confirmation message will be displayed. Turn the TUNE FOLDER PUSH SOUND knob (1) to select "Confirm", and press the knob (1) to complete the assignment.

NOTE:
When selecting "Go Back", the previous menu will be displayed.

One-touch call (Speed dial)

Follow the instructions below to dial the number assigned to each of the Preset buttons (3).

1) Press the Off Hook button (7).
   The Bluetooth® main menu will be displayed.
2) Press one of the Preset buttons (3). The assigned number will be pronounced.
   When no number is assigned, "Empty" is displayed.
3) Press the Off Hook button (7). The selected number will be dialed.

Deletion of speed dial (Del Spd Dial)

To delete a number assigned for the speed dial, follow the instructions below.

1) Press the Off Hook button (7).
   The Bluetooth® main menu will be displayed.
2) Turn the TUNE FOLDER PUSH SOUND knob (1) to select "Phonebook", and press the knob (1) to determine the selection.
3) Turn the TUNE FOLDER PUSH SOUND knob (1) to select "Del Spd Dial", and press the knob (1) to determine the selection.
4) Press one of the Preset buttons (3) to which the number to be deleted is assigned.
   "Empty" appears if the number is not registered.
5) Turn the TUNE FOLDER PUSH SOUND knob (1) to select "Confirm", and press the knob (1) to complete the deletion.

NOTE:
When selecting "Go Back", the previous menu will be displayed.

Security number (PIN)

Follow the instructions below to set the security number (PIN).
Once PIN is set, PIN entry will be required to lock/unclock the Phonebook.

1) Press the Off Hook button (7).
   The Bluetooth® main menu will be displayed.
2) Turn the TUNE FOLDER PUSH SOUND knob (1) to select "Setup", and press the knob (1) to determine the selection.
3) Turn the TUNE FOLDER PUSH SOUND knob (1) to select "Security", and press the knob (1) to determine the selection.
4) Turn the TUNE FOLDER PUSH SOUND knob (1) to select "Set PIN", and press the knob (1) to determine the selection.
   When the PIN is already set, PIN entry will be required. If the PIN needs to be changed, enter the current PIN.
5) Turn the TUNE FOLDER PUSH SOUND knob (1) to select a number for the first digit, and press the knob (1) to determine the selection. Select and determine numbers for the second, third and fourth digits in order in the same manner.

6) Turn the TUNE FOLDER PUSH SOUND knob (1) to select "Confirm", and press the knob (1) to determine the selection.

NOTE:
When selecting "Go Back", the previous menu will be displayed.

Phonebook lock

Locking Phonebook disables users from displaying, using, editing, and deleting of Phonebook and call history.

1) Press the Off Hook button (7).
   The Bluetooth® main menu will be displayed.
2) Turn the TUNE FOLDER PUSH SOUND knob (1) to select "Setup", and press the knob (1) to determine the selection.
3) Turn the TUNE FOLDER PUSH SOUND knob (1) to select "Security", and press the knob (1) to determine the selection.
4) Turn the TUNE FOLDER PUSH SOUND knob (1) to select "Phbk Lock", and press the knob (1) to lock Phonebook.
   When Phonebook is already locked, "Locked" will be displayed.
5) Enter the PIN number.

NOTE:
When selecting "Go Back", the previous menu will be displayed.

Phonebook unlock

Follow the instructions below to unlock the locked Phonebook.

1) Press the Off Hook button (7).
   The Bluetooth® main menu will be displayed.
2) Turn the TUNE FOLDER PUSH SOUND knob (1) to select "Setup", and press the knob (1) to determine the selection.
3) Turn the TUNE FOLDER PUSH SOUND knob (1) to select "Security", and press the knob (1) to determine the selection.
4) Turn the TUNE FOLDER PUSH SOUND knob (1) to select "Phbk Unlock", and press the knob (1) to determine the selection.
   When Phonebook is already unlocked, "Unlocked" will be displayed.
5) Enter the PIN number.

NOTE:
When selecting "Go Back", the previous menu will be displayed.

Display of device data (Device Name)

Follow the instructions below to display the BD (Bluetooth® Device) address and device name.

1) Press the Off Hook button (7).
   The Bluetooth® main menu will be displayed.
2) Turn the TUNE FOLDER PUSH SOUND knob (1) to select "Setup", and press the knob (1) to determine the selection.
3) Turn the TUNE FOLDER PUSH SOUND knob (1) to select "System Setup", and press the knob (1) to determine the selection.
4) Turn the TUNE FOLDER PUSH SOUND knob (1) to select "Device Name", and press the knob (1) to determine the selection.
5) Turn the TUNE FOLDER PUSH SOUND knob (1) to display the BD (Bluetooth® Device) address and the device name.

NOTE:
When selecting "Go Back", the previous menu will be displayed.

Reset to the factory defaults

Follow the instructions below to reset all the settings to the factory defaults.

1) Press the Off Hook button (7).
   The Bluetooth® main menu will be displayed.
2) Turn the TUNE FOLDER PUSH SOUND knob (1) to select "Setup", and press the knob (1) to determine the selection.
3) Turn the TUNE FOLDER PUSH SOUND knob (1) to select "System Setup", and press the knob (1) to determine the selection.
4) Turn the TUNE FOLDER PUSH SOUND knob (1) to select "Initialize", and press the knob (1) to determine the selection.
5) Turn the TUNE FOLDER PUSH SOUND knob (1) to select "Confirm", and press the knob (1) to determine the selection.
6) Turn the TUNE FOLDER PUSH SOUND knob (1) to select "Confirm", and press the knob (1) to start the reset.

NOTE:
When selecting "Go Back", the previous menu will be displayed.

Selection of phone (Select Phone)

Follow the instructions below to select a phone to be paired with from the registered phones.

1) Press the Off Hook button (7).
   The Bluetooth® main menu will be displayed.
2) Turn the TUNE FOLDER PUSH SOUND knob (1) to select "Setup", and press the knob (1) to determine the selection.
3) Turn the TUNE FOLDER PUSH SOUND knob (1) to select "Phone Setup", and press the knob (1) to determine the selection.
4) Turn the TUNE FOLDER PUSH SOUND knob (1) to select "Select Phone", and press the knob (1) to determine the selection.
5) Turn the TUNE FOLDER PUSH SOUND knob (1) to select a phone to be paired with, and press the knob (1) to determine the selection.
6) Turn the TUNE FOLDER PUSH SOUND knob (1) to select "Confirm", and press the knob (1) to determine the selection.

NOTE:
- *When selecting "Go Back", the previous menu will be displayed.*
- *The Bluetooth®-ready audio device will be disconnected when the phone is selected.*

Change of phone name (Change Name)
Follow the instructions below to change the registered name of the phone.

1) Press the Off Hook button (7).
   The Bluetooth® main menu will be displayed.
2) Turn the TUNE FOLDER PUSH SOUND knob (1) to select "Setup", and press the knob (1) to determine the selection.
3) Turn the TUNE FOLDER PUSH SOUND knob (1) to select "Phone Setup", and press the knob (1) to determine the selection.
4) Turn the TUNE FOLDER PUSH SOUND knob (1) to select "Change Name", and press the knob (1) to determine the selection.
5) Turn the TUNE FOLDER PUSH SOUND knob (1) to select a phone whose name is to be changed, and press the knob (1) to determine the selection.
6) Turn the TUNE FOLDER PUSH SOUND knob (1) to select "Record Name", and press the knob (1) to determine the selection.
7) Pronounce the phone name to be registered.
8) Turn the TUNE FOLDER PUSH SOUND knob (1) to select "Confirm", and press the knob (1) to determine the selection.

NOTE:
When selecting "Go Back", the previous menu will be displayed.

List of phones (List Phones)
Follow the instructions below to display the names of the registered phones in sequence.

1) Press the Off Hook button (7).
   The Bluetooth® main menu will be displayed.
2) Turn the TUNE FOLDER PUSH SOUND knob (1) to select "Setup", and press the knob (1) to determine the selection.
3) Turn the TUNE FOLDER PUSH SOUND knob (1) to select "Phone Setup", and press the knob (1) to determine the selection.
4) Turn the TUNE FOLDER PUSH SOUND knob (1) to select "List Phones", and press the knob (1) to determine the selection.
   The names of registered phones are displayed in sequence.

NOTE:
When selecting "Go Back", the previous menu will be displayed.

Passkey setting (Set Passkey)

Follow the instructions below to set the security number (Passkey).

1) Press the Off Hook button (7).
   The Bluetooth® main menu will be displayed.
2) Turn the TUNE FOLDER PUSH SOUND knob (1) to select "Setup", and press the knob (1) to determine the selection.
3) Turn the TUNE FOLDER PUSH SOUND knob (1) to select "Phone Setup", and press the knob (1) to determine the selection.
4) Turn the TUNE FOLDER PUSH SOUND knob (1) to select "Set Passkey", and press the knob (1) to determine the selection.
5) Turn the TUNE FOLDER PUSH SOUND knob (1) to select a number for the first digit, and press the knob (1) to determine the selection. Select and determine numbers for the second, third and fourth digits in order in the same manner. When not entering up to the eighth digit, enter blanks for the successive digits.
6) Turn the TUNE FOLDER PUSH SOUND knob (1) to determine the passkey setting.

NOTE:
When selecting "Go Back", the previous menu will be displayed.

Deletion of phone information (Delete Phone)

Follow the instructions below to delete the registered information of the phone.

1) Press the Off Hook button (7).
   The Bluetooth® main menu will be displayed.
2) Turn the TUNE FOLDER PUSH SOUND knob (1) to select "Setup", and press the knob (1) to determine the selection.
3) Turn the TUNE FOLDER PUSH SOUND knob (1) to select "Phone Setup", and press the knob (1) to determine the selection.
4) Turn the TUNE FOLDER PUSH SOUND knob (1) to select "Delete Phone", and press the knob (1) to determine the selection.
5) Turn the TUNE FOLDER PUSH SOUND knob (1) to select a phone to be deleted, and press the knob (1) to determine the selection.
6) Turn the TUNE FOLDER PUSH SOUND knob (1) to select "Confirm", and press the knob (1) to determine the selection.

NOTE:
When selecting "Go Back", the previous menu will be displayed.

HF function on/off (HF Power)

Follow the instructions below to turn on/off the Bluetooth® function.

1) Press the Off Hook button (7).
   The Bluetooth® main menu will be displayed.
2) Turn the TUNE FOLDER PUSH SOUND knob (1) to select "Setup", and press the knob (1) to determine the selection.
3) Turn the TUNE FOLDER PUSH SOUND knob (1) to select "Phone Setup", and press the knob (1) to determine the selection.
4) Turn the TUNE FOLDER PUSH SOUND knob (1) to select "HF Power", and press the knob (1) to determine the selection.
5) Turn the TUNE FOLDER PUSH SOUND knob (1) to select "Turn on" or "Turn off" and press the knob (1) to determine the selection.

NOTE:

- *When the HF function is turned off, the connection between this unit and the registered phone in use will be disconnected.*
- *When selecting "Go Back", the previous menu will be displayed.*

Phone call using voice command

A phone call can be made with use of a voice command.

1) Press the Talk button (6).
2) Pronounce a name registered in the Phonebook.
3) Press the Off Hook button (7).
   The selected number is dialed.

Bluetooth® audio (if equipped)

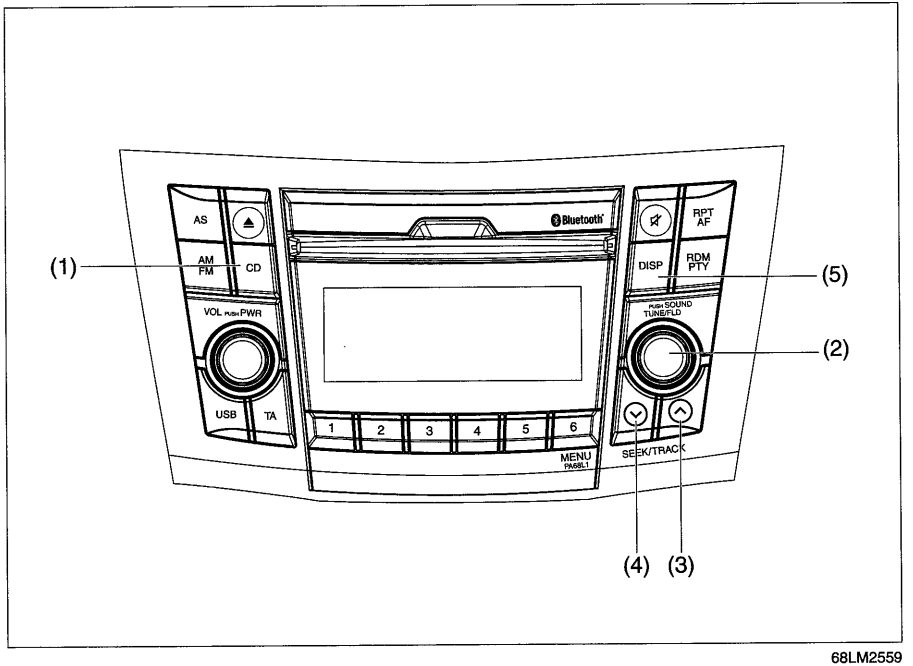

68LM2559

Steering switch

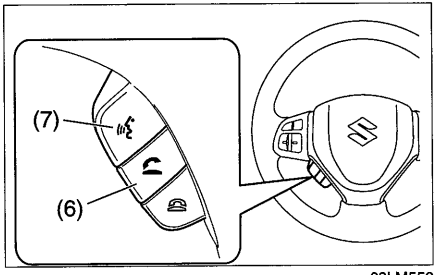

68LM552

Display

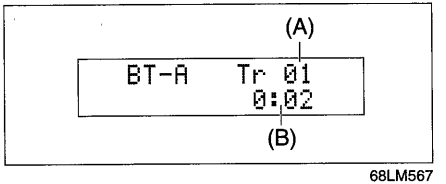

68LM567

(1) CD button
(2) TUNE FOLDER PUSH SOUND knob
(3) Up button
(4) Down button
(5) DISP button
(6) Off Hook button
(7) Talk button

(A) Track number
(B) Play time

Registration of audio devices (Pair Audio, when no phone is registered)

To use Bluetooth®-ready audio devices with this unit, it is required to register the devices.

NOTE:

- *To set up a new audio player, disconnect the phone from the unit. Connect the phone after audio player setup is completed if necessary.*
- *When failed to establish the connection within 120 seconds, the connecting operation will be canceled. Please try again or refer to the audio player manual for assistance with the pairing process.*

1) Press the CD button (1) to select Bluetooth® audio mode.
   "BT.A" will be displayed.
2) Press the Talk button (7).
   The Bluetooth® main menu will be displayed.
3) Turn the TUNE FOLDER PUSH SOUND knob (2) to select "Pair Audio", and press the knob (2) to determine the selection.
4) Turn the TUNE FOLDER PUSH SOUND knob (2) to select "Record Name", and press the knob (2) to determine the selection.
5) Pronounce a name of the audio device to be registered.
6) Turn the TUNE FOLDER PUSH SOUND knob (2) to select "Confirm", and press the knob (2) to determine the selection.
7) Select "CAR M_MEDIA" from the Bluetooth® menu of the audio player and establish the pairing.
   Refer to the manual of the audio player in use for further information.
8) Enter the Passkey displayed on the unit to the audio player.

NOTE:
When selecting "Go Back", the previous menu will be displayed.

Registration of audio devices (Pair Audio, when a phone is registered)

To use Bluetooth®-ready audio devices with this unit, it is required to register the devices.

NOTE:

- *To set up a new audio player, disconnect the phone from the unit. Connect the phone after audio player setup is completed if necessary.*
- *When failed to establish the connection within 120 seconds, the connecting operation will be canceled. Please try again or refer to the audio player manual for assistance with the pairing process.*

1) Press the Off Hook button (6).
   The Bluetooth® main menu will be displayed.
2) Turn the TUNE FOLDER PUSH SOUND knob (2) to select "Setup", and press the knob (2) to determine the selection.
3) Turn the TUNE FOLDER PUSH SOUND knob (2) to select "BT.A Setup", and press the knob (2) to determine the selection.
4) Turn the TUNE FOLDER PUSH SOUND knob (2) to select "Pair Audio", and press the knob (2) to determine the selection.

5) Turn the TUNE FOLDER PUSH SOUND knob (2) to select "Record Name", and press the knob (2) to determine the selection.
6) Pronounce a name of the audio device to be registered.
7) Turn the TUNE FOLDER PUSH SOUND knob (2) to select "Confirm", and press the knob (2) to determine the selection.
8) Select "CAR M_MEDIA" from the Bluetooth® menu of the audio player and establish the connection.
   Refer to the manual of the audio player in use for further information.
9) Enter the Passkey displayed on the unit to the audio player.

NOTE:
When selecting "Go Back", the previous menu will be displayed.

Selecting the Bluetooth® audio mode
Press the CD button (1).
Each time the button is pressed, the mode will change as follows:

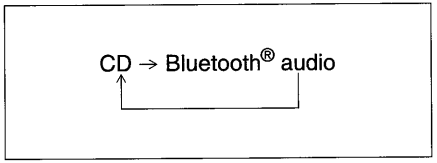

Selecting a group (only for supported-models)
Turn the TUNE FOLDER PUSH SOUND knob (2) to select a group.

Selecting a track
- Press the Up button (3) to listen to the next track.
- Press the Down button (4) twice to listen to the previous track.
  When the Down button (4) is pressed once, the track currently being played will start from the beginning again.

Fast forwarding/Rewinding a track
- Hold down the Up button (3) to fast forward the track.
- Hold down the Down button (4) to fast rewind the track.

NOTE:
Some functions may not be available depending on Bluetooth® audio.

Display change
Press the DISP button (5).
Each time the button is pressed, display will change as follows:

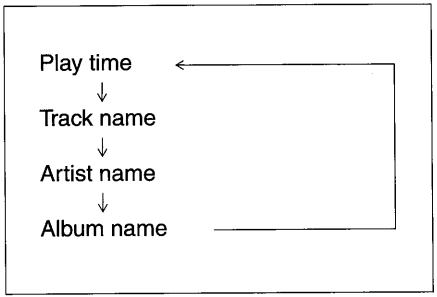

NOTE:
If text data contains more than 12 characters, the ">" mark will appear at the right end. Holding down the DISP button (5) for 1 second or longer can display the next page.

Selection of audio device (Select Audio)

Follow the instructions below to select an audio device to be paired with from the registered audio devices.

1) Press the Off Hook button (6).
   The Bluetooth® main menu will be displayed.
2) Turn the TUNE FOLDER PUSH SOUND knob (2) to select "Setup", and press the knob (2) to determine the selection.
3) Turn the TUNE FOLDER PUSH SOUND knob (2) to select "BT.A Setup", and press the knob (2) to determine the selection.
4) Turn the TUNE FOLDER PUSH SOUND knob (2) to select "Select Audio", and press the knob (2) to determine the selection.
5) Turn the TUNE FOLDER PUSH SOUND knob (2) to select an audio device to be used, and press the knob (2) to determine the selection.
6) Turn the TUNE FOLDER PUSH SOUND knob (2) to select "Confirm", and press the knob (2) to determine the selection.
7) Turn the TUNE FOLDER PUSH SOUND knob (2) to select "From Car" or "From Audio", and press the knob (2) to determine the selection.
   "From Car": Establishes the pairing from the unit.
   "From Audio": Establishes the pairing from the audio device.
8) Turn the TUNE FOLDER PUSH SOUND knob (2) to select "Confirm", and press the knob (2) to complete the pairing.

NOTE:

- *When selecting "Go Back", the previous menu will be displayed.*
- *The phone will be disconnected when the Bluetooth®-ready audio device is selected.*

Change of audio device name (Change Name)

Follow the instructions below to change the registered name of the audio devices.

1) Press the Off Hook button (6).
   The Bluetooth® main menu will be displayed.
2) Turn the TUNE FOLDER PUSH SOUND knob (2) to select "Setup", and press the knob (2) to determine the selection.
3) Turn the TUNE FOLDER PUSH SOUND knob (2) to select "BT.A Setup", and press the knob (2) to determine the selection.
4) Turn the TUNE FOLDER PUSH SOUND knob (2) to select "Change Name", and press the knob (2) to determine the selection.
5) Turn the TUNE FOLDER PUSH SOUND knob (2) to select an audio device whose name is to be changed, and press the knob (2) to determine the selection.
6) Turn the TUNE FOLDER PUSH SOUND knob (2) to select "Record Name", and press the knob (2) to determine the selection.
7) Pronounce the audio device name to be registered.

8) Turn the TUNE FOLDER PUSH SOUND knob (2) to select "Confirm", and press the knob (2) to complete the name change.

NOTE:
When selecting "Go Back", the previous menu will be displayed.

List of audio devices (List Audio)

Follow the instructions below to display the names of the registered audio devices in sequence.

1) Press the Off Hook button (6).
   The Bluetooth® main menu will be displayed.
2) Turn the TUNE FOLDER PUSH SOUND knob (2) to select "Setup", and press the knob (2) to determine the selection.
3) Turn the TUNE FOLDER PUSH SOUND knob (2) to select "BT.A Setup", and press the knob (2) to determine the selection.
4) Turn the TUNE FOLDER PUSH SOUND knob (2) to select "List Audios", and press the knob (2) to determine the selection.
   The names of registered audio devices will be displayed in sequence.

NOTE:
When selecting "Go Back", the previous menu will be displayed.

Passkey setting (Set Passkey)

Follow the instructions below to set the security number (Passkey).

1) Press the Off Hook button (6).
   The Bluetooth® main menu will be displayed.
2) Turn the TUNE FOLDER PUSH SOUND knob (2) to select "Setup", and press the knob (2) to determine the selection.
3) Turn the TUNE FOLDER PUSH SOUND knob (2) to select "BT.A Setup", and press the knob (2) to determine the selection.
4) Turn the TUNE FOLDER PUSH SOUND knob (2) to select "Set Passkey", and press the knob (2) to determine the selection.
5) Turn the TUNE FOLDER PUSH SOUND knob (2) to select a number for the first digit, and press the knob (2) to determine the selection. Select and determine numbers for the second, third and fourth digits in order in the same manner. When not entering up to the eighth digit, enter blanks for the successive digits.
6) Turn the TUNE FOLDER PUSH SOUND knob (2) to determine the passkey setting.

NOTE:
When selecting "Go Back", the previous menu will be displayed.

Deletion of audio device information (Delete Audio)

Follow the instructions below to delete the registered information of audio device.

1) Press the Off Hook button (6).
   The Bluetooth® main menu will be displayed.
2) Turn the TUNE FOLDER PUSH SOUND knob (2) to select "Setup", and press the knob (2) to determine the selection.
3) Turn the TUNE FOLDER PUSH SOUND knob (2) to select "BT.A Setup", and press the knob (2) to determine the selection.
4) Turn the TUNE FOLDER PUSH SOUND knob (2) to select "Delete Audio", and press the knob (2) to determine the selection.
5) Turn the TUNE FOLDER PUSH SOUND knob (2) to select an audio device to be deleted, and press the knob (2) to determine the selection.
6) Turn the TUNE FOLDER PUSH SOUND knob (2) to select "Confirm", and press the knob (2) to complete the deletion.

NOTE:
When selecting "Go Back", the previous menu will be displayed.

Remote Audio Controls (if equipped)

Controlling of basic functions of the audio system is available using the switches on the steering wheel.

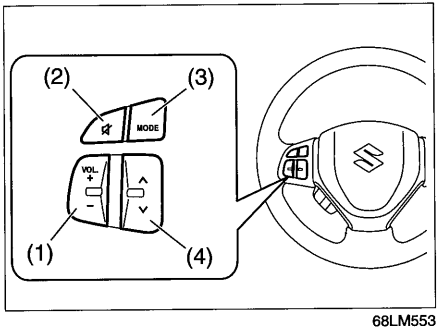

68LM553

Adjusting the volume

- To increase the volume, hold down "+" of the VOL switch (1). The volume will keep on being increased until the switch is released.
- To decrease the volume, hold down "-" of the VOL switch (1). The volume will keep on being decreased until the switch is released.
- To mute the sound, press the switch (2).

Selecting the mode

Press the switch (3).

Each time the button is pressed, the mode will change as follows:

FM1 (Radio) ←
↓
FM2 (Radio)
↓
CD
↓
Bluetooth® audio (if equipped)
↓
USB (iPod®)
↓
LW (Radio)
↓
MW (Radio) ——

It is possible to turn on the audio system by pressing the switch (3).

Selecting the radio station (FM1, FM2, LW, MW mode)

- To select the next preset station, press "∧" of the switch (4) only for a moment.
- To select the previous preset station, press "v" of the switch (4) only for a moment.
- To scan a higher frequency radio station, press "∧" of the switch (4) for 1 second or longer.
- To scan a lower frequency radio station, press "v" of the switch (4) for 1 second or longer.

Selecting the track (CD, USB (iPod®) Bluetooth® audio mode)

- To skip to the next track, press "∧" of the switch (4) only for a moment.
- To skip to the previous track, press "v" of the switch (4) twice only for a moment.
  When the switch (4) is pushed down once only for a moment, the track currently being played will start from the beginning again

Fast forwarding/Rewinding a track

- To forward fast, press "∧" of the switch (4) for 1 second or longer.
- To rewind fast, press "v" of the switch (4) for 1 second or longer.

Anti-Theft Feature

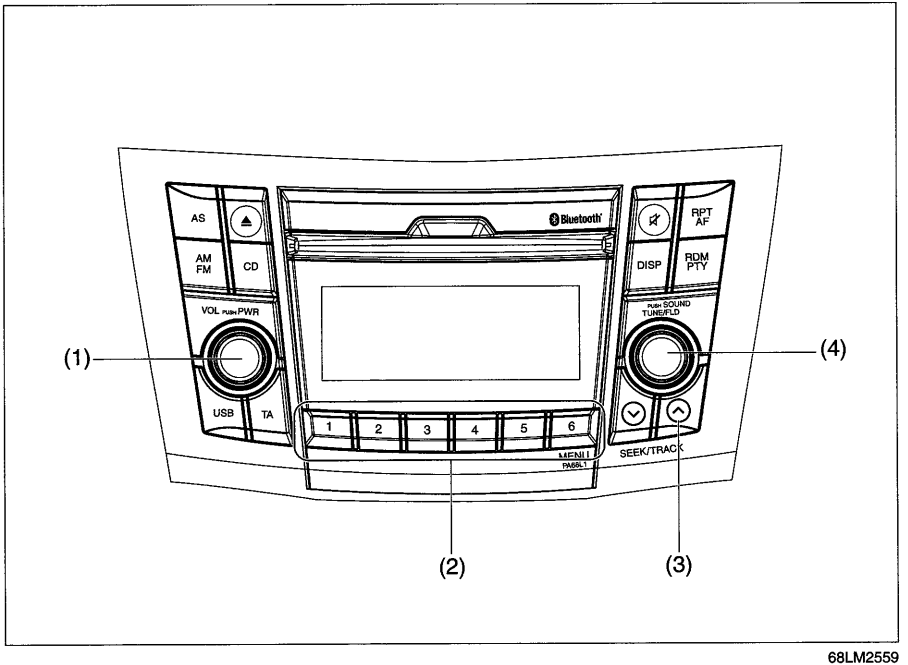

68LM2559

(1) VOL PUSH POWER knob
(2) Preset buttons ([1] to [6])
(3) Up button
(4) TUNE FOLDER PUSH SOUND knob

The anti-theft function is intended to discourage thefts such as the audio system that becomes unable to operate when it is installed on another vehicle.
This function works by entering a Personal Identification Number (PIN).
When the unit is disconnected from its power source, such as when the audio system is removed or the battery is disconnected, the unit will become inoperable until the PIN is reentered.

Setting the Anti-Theft Function

1) Press the VOL PUSH POWER knob (1) to power off.
2) Hold down the buttons numbered [1] and [6] of the Preset buttons (2) and press the VOL PUSH POWER knob (1).
   "SECURITY" will be displayed.
3) Press the Up button (3) and the button numbered [1] of the Preset buttons (2) simultaneously.
4) Enter a 4-digit number to be registered as PIN using the buttons numbered [1] - [4] of the Preset buttons (2).
5) Hold down the TUNE FOLDER PUSH SOUND knob (4) for 1 second or longer to set the anti-theft function.

NOTE:
Take a note of the registered PIN and keep it for the future use.

Canceling the anti-theft feature

To cancel the anti-theft function, delete the registered PIN.

1) Press the VOL PUSH POWER knob (1) to power off.
2) Hold down the buttons numbered [1] and [6] of the Preset buttons (2) and press the VOL PUSH POWER knob (1).
   "PIN ENTRY" will be displayed.
3) Press the Up button (3) and the button numbered [1] of the Preset buttons (2) simultaneously.
4) Enter a 4-digit number to be registered as PIN using the buttons numbered [1] - [4] of the Preset buttons (2).
5) Hold down the TUNE FOLDER PUSH SOUND knob (4) for 1 second or longer to delete the registered PIN. The indication "----" will be displayed and the anti-theft function will be canceled.

NOTE:
To change your PIN, first delete your current PIN, then set a new one.

Confirming the Personal Identification Number (PIN)

When the main power source is disconnected such as when the battery is replaced, etc, it is required to enter the PIN to make the unit operable again.

1) Set the ignition switch to the "ACC" position.
   "SECURITY" will be displayed.
2) Press the Up button (3) and the button numbered [1] of the Preset buttons (2) simultaneously.
3) Enter a 4-digit number to be registered as PIN using the buttons numbered [1] - [4] of the Preset buttons (2).
4) Hold down TUNE FOLDER PUSH SOUND knob (4) for 1 second or longer.
   When the PIN same as registered is entered, the power of the audio system will be turned off automatically and it will become operable again.

NOTE:
If an incorrect PIN is entered, "ERROR" and the total number of incorrect entry attempts will be displayed.
If an incorrect PIN is entered 10 times or more, "HELP" will be displayed and the audio system will become inoperable.

Troubleshooting

When encountered a problem, check and follow the instructions as described below.
If the described suggestions do not solve the problem, it is recommended to take the unit to your authorized SUZUKI dealer.

Problem	Possible cause	Possible solution
Common		
Unable to operate	The security function is on.	When "SECURITY" is displayed, enter the ID. When "HELP" is displayed, contact your authorized SUZUKI dealer.
Unable to turn on the power (no sound). (No sound is produced)	Fuse is blown.	Contact your authorized SUZUKI dealer.
Radio		
Much noise	It may not exactly tuned in to the station.	Tune it in exactly to the station.
Unable to receive by auto tuning	There may be no station emitting signals powerful enough.	Pick up a station by manual tuning.
	If AF is ON, the unit searches for RDS stations only.	Turn AF off.
CD		
Sound skips or noise produced	The disc is dirty.	Wipe the disc with a soft cloth.
	The disc has a major scratch or is warped.	Replace the disc with the one with no scratch and also not warped.

Problem	Possible cause	Possible solution
MP3/WMA		
No playback	The disc contains unsupported formatted data.	Check the file format.
Sound skips or noise produced	Sound skipping may occur when playing VBR (Variable Bit Rate) files.	It is not recommended to play VBR files.
USB		
Playback does not start when the USB device is connected.	There is no supported format file to play on this unit.	Check the file format.
	The current consumption of the USB device exceeds 500 mA.	Use a USB device with a current consumption lower than 500 mA.
Bluetooth®		
Pairing failed	The distance between this unit and the Bluetooth®-ready device is too far, or a metallic object may be located between the Bluetooth®-ready device and this unit.	Change the location of the Bluetooth®-ready device.
	The Bluetooth® function of the Bluetooth®-ready device is off.	Refer to the manual of the Bluetooth®-ready device. (Some devices have the power saving function that automatically activates after a certain time.)
Unable to receive a call.	Your current location may be out of service area.	Drive your car to the service area of the phone.
The voice quality of hands-free is low (Distortion, noise etc.).	Another wireless device may be located near the unit.	Switch off the wireless device or keep it away from the unit.

Error Display Messages

Display	Possible cause	Possible solution
CD		
ERROR 1	The disc cannot be read.	Insert the disc with its label side up. Check the disc if it is not warped or is free of flaws. When ERROR 1 does not disappear even when a normal disc is inserted, contact your dealer.
ERROR 3	The player developed an error of an unidentified cause.	When the CD is in the unit, press the CD eject button to remove the disc. When the disc cannot be ejected, contact your dealer.
USB/iPod®		
ERROR 1	Inoperable due to an unidentified cause.	Unplug the USB device and plug it again. When ERROR 1 does not disappear, contact your dealer.
ERROR 2	Impossible to communicate correctly with the USB device.	Unplug the USB device and plug it again. Check the USB device.
ERROR 3	The USB device is disconnected.	Check the connection of the USB device.
ERROR 4	The current consumption of the USB device exceeds 500 mA.	Check the USB device.

Display	Possible cause	Possible solution

Bluetooth®

ERROR 1	The player developed an error of an unidentified cause.	Disconnect the Bluetooth®-ready device and connect it again. When ERROR 1 does not disappear, contact your dealer.
Failed	Failed to establish pairing	Try to establish the pairing again.
Memory Full	Reached the limit for the number of connected device information	Delete information of unnecessary devices and try to establish the pairing again.
Not Avail.	Inoperable during driving	Operate the system after pulling over your car.
Pardon?	Failed voice recognition	Press the Talk button and pronounce again.
Not Linked	Phone is disconnected	Try to establish the pairing again.

Fuel Filler Cap

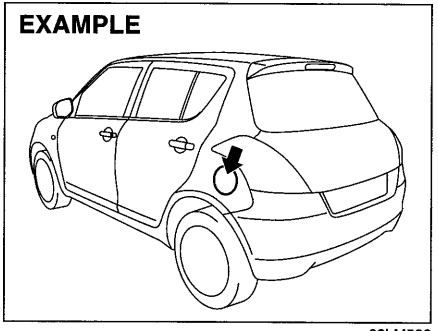

68LM522

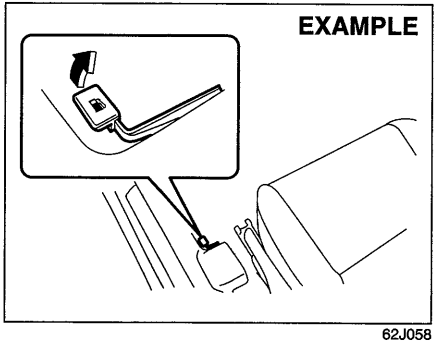

62J058

The fuel filler cap is located on the left rear side of the vehicle. The fuel filler door can be unlocked by pulling up the opener lever located on the outboard side of the driver's seat and locked by simply closing the door.

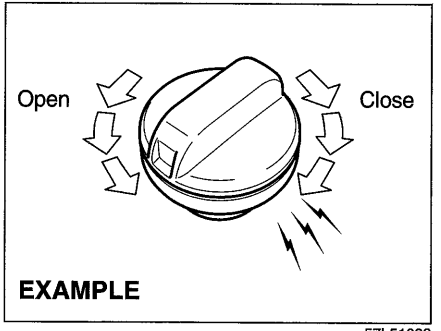

57L51093

To remove the fuel filler cap:
1) Open the fuel filler door.
2) Remove the cap by turning it counter-clockwise.

⚠ CAUTION

Remove the fuel filler cap slowly. The fuel may be under pressure and may spray out, causing injury.

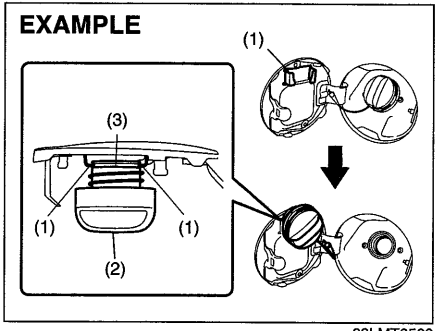

68LMT0503

NOTE:
The cap holder (1) holds the fuel filler cap (2) by hooking the groove (3) when refueling.

To reinstall the fuel filler cap:
1) Turn the cap clockwise until you hear several clicks.
2) Close the fuel filler door.

⚠ WARNING

Fuel is extremely flammable. Do not smoke when refueling, and make sure there are no open flames or sparks in the area.

⚠ WARNING

If you need to replace the fuel cap, use a genuine SUZUKI cap. Use of an improper cap can result in a malfunction of the fuel system or emission control system. It may also result in fuel leakage in the event of an accident.

Engine Hood

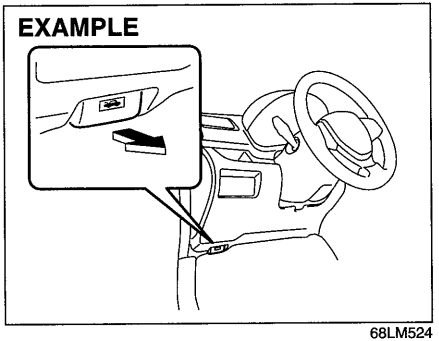

68LM524

To open the engine hood:

1) Pull the hood release handle located on the outboard side of the driver's side of the instrument panel. This will disengage the engine hood lock halfway.

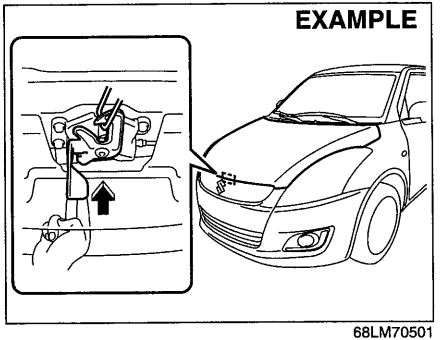

68LM70501

2) Push the under-hood release lever up with your finger, as shown in the illustration. While pushing the lever, lift up the engine hood.

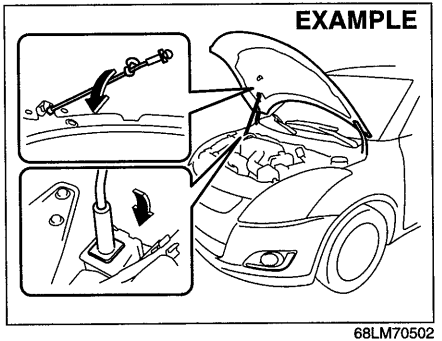

68LM70502

3) Continue to lift up the hood until it is high enough to support with the prop rod.

To close the engine hood:
1) Lift the hood up slightly and remove the prop rod from the hole. Put the prop rod back to the holding clip.
2) Lower the hood close to the bumper, then let it drop down. Make sure the hood is securely latched after closing.

⚠ WARNING

Make sure the hood is fully closed and latched before driving. If it is not, it can fly up unexpectedly during driving, obstructing your view and resulting in an accident.

Sun Visor

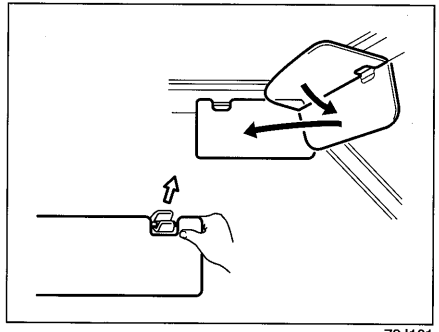

79J161

The sun visors can be pulled down to block glare coming through the windshield, or they can be unhooked and turned to the side to block glare coming through the side window.

NOTICE

When unhooking and hooking a sun visor, be sure to handle it by the hard plastic parts or the sun visor can be damaged.

Card holder (if equipped)

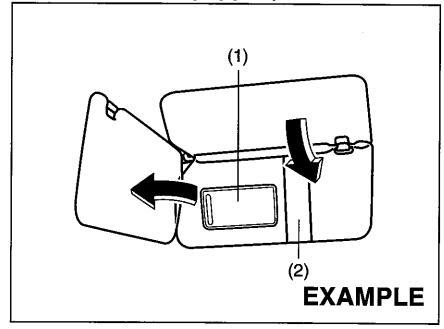

68LM527

(1) Mirror cover
(2) Card holder

You can put a card in the card holder (2) on the back of the sun visor.

NOTICE

When you park your vehicle outdoors in direct sunlight or in hot weather, do not leave plastic cards in the holder. The heat may distort them.

Vanity mirror (if equipped)

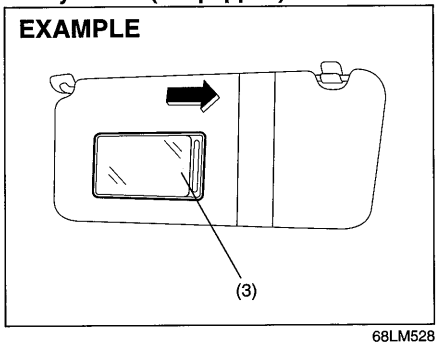

68LM528

(3) Vanity mirror

To use the vanity mirror (3) on the back of the sun visor, slide the mirror cover (1).

⚠ WARNING

- **Do not use the mirror while driving your vehicle or could lose control of the vehicle.**
- **When using the vanity mirror, do not move too close to a front air bag location or lean against it. If the front air bag is accidentally inflated, it could hit you hard.**

Interior Light Switch

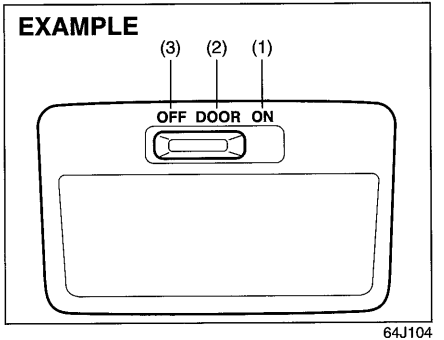

64J104

This light switch has three positions which function as described below:

ON (1)
The light comes on and stays on regardless of whether the door is open or closed.

DOOR (2)
The light comes on when the door is opened. After closing all doors, the light will remain on for about 15 seconds and then fade out. If you insert the key, or press the engine switch to change the ignition mode to "ACC" or "ON" during this time, the light will start to fade out immediately. After removing the key from the ignition switch, the light will turn on for about 15 seconds and then fade out.

OFF (3)
The light remains off even when the door is opened.

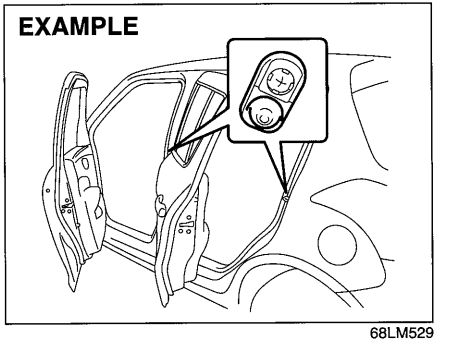

68LM529

NOTE:
The number of doors involved in the lighting operation of the interior light depends on the vehicle specification. If there is a switch (rubber projection) at the door opening as shown, the door is involved in the lighting operation. The tailgate is also involved in this operation even without the rubber projection.

Luggage Compartment Light

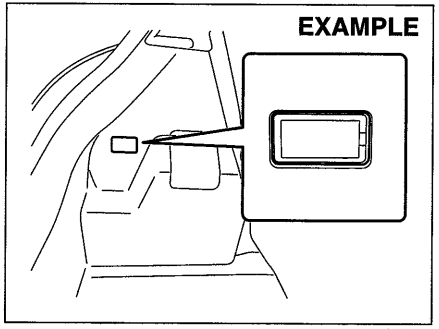

68LM530

When you open a door or the tailgate, the luggage compartment light comes on.

NOTICE
Do not leave the tailgate open for a long time, or the battery will discharge.

Spot Light (if equipped)

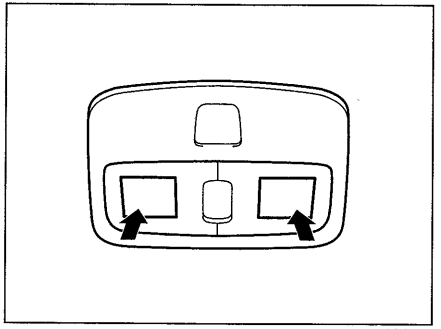

68LM531

Push the switch to turn on the light and push it again to turn off the light.

Accessory Socket

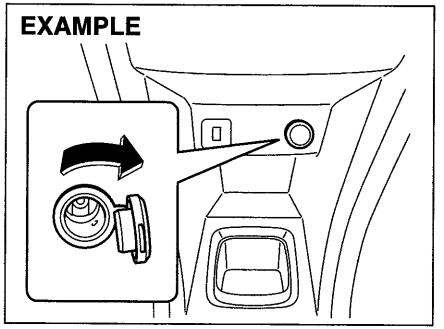

71LMT0502

The accessory socket will work when the ignition switch is in the "ACC" or "ON" position, or the ignition mode is "ACC" or "ON". This socket can be used to provide 12 volt/ 120 watt power for electrical accessories.

NOTICE

Use of inappropriate electrical accessories can cause damage to your vehicle's electrical system. Make sure that any electrical accessories you use are designed to plug into this type of socket.

Universal Serial Bus (USB) Socket (if equipped)

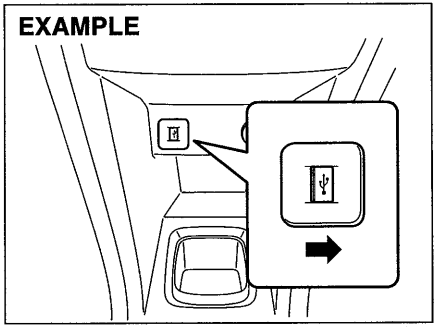

68LM533

Connect your portable digital music player, etc. to this socket to enjoy music through the vehicle's audio system using it as a source. Refer to "Audio System" in the "OTHER CONTROL AND EQUIPMENT" section.

Assist Grips

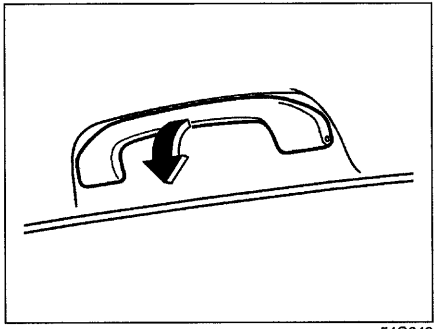

54G249

Assist grips are provided for convenience.

NOTICE

To avoid damaging the assist grip and the molded headlining, do not hang down the assist grip.

Sunroof (if equipped)

You can tilt or slide the sunroof by operating the "TILT UP" part of the sunroof switch or the "SLIDE OPEN" part of the sunroof switch after turning the ignition key to the "ON" position or after pressing the engine switch to change the ignition mode to "ON".

There is a system to prevent being pinched by the sunroof.
When the system senses that something is pinched when the sunroof is sliding forward, the sunroof will automatically reverse direction and slide rearward. This system will operate when the sunroof is closing automatically. This system does not operate when tilting the sunroof down.

Make sure there are no hands or other obstructions in the path of the sunroof when you close the sunroof even though there is a system to prevent being pinched by the sunroof.

⚠ WARNING

The system to prevent being pinched by the sunroof may not work if the battery is not sufficiently charged.

⚠ CAUTION

The system to prevent being pinched by the sunroof does not work in the area where the sunroof is almost completely closed.

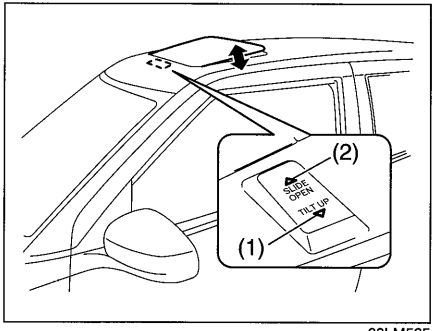

68LM535

To tilt the sunroof up, slide the sun shade rearward by hand and push the "TILT UP" part (1) of the sunroof switch. To tilt the sunroof down, push the "SLIDE OPEN" part (2) of the sunroof switch.
If you push the switch for more than a second, the sunroof will automatically tilt up or down fully. To stop the sunroof halfway, push the switch briefly.

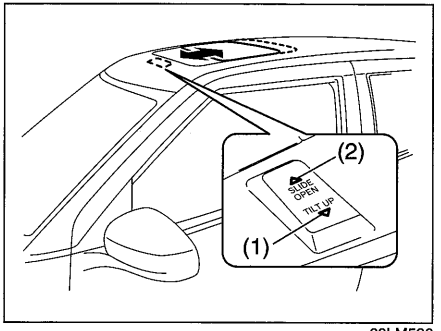

68LM536

To slide the sunroof rearward, push the "SLIDE OPEN" part (2) of the sunroof switch. To slide the sunroof forward, push the "TILT UP" part (1) of the sunroof switch.
If you push the switch for more than a second, the sunroof will automatically slide fully rearward or forward. To stop the sunroof halfway, push the switch briefly.

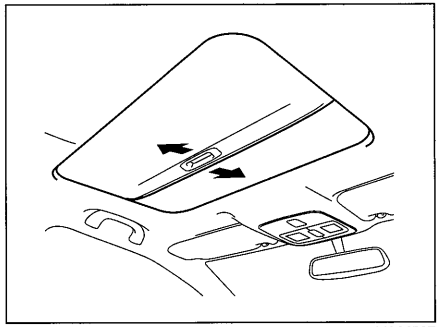

68LM537

The sun shade will open manually and cannot be closed when the sunroof is slid rearward.

How to reactivate the system to prevent being pinched by the sunroof

If the system to prevent being pinched by the sunroof does not operate properly, you must reactivate the features using the following procedures.

1) Turn the ignition key to the "ON" position or press the engine switch to change the ignition mode to "ON".
2) Push "TILT UP" part (1) on the sunroof switch to set the tilt to its highest position.
3) Continue to push and hold the "TILT UP" part (1) on the sunroof switch for more than 15 seconds and then release it.
4) Push "TILT UP" part (1) on the sunroof switch again soon after releasing it and hold it until sunroof's tilt down, slide open and slide close operations are completed. Release "TILT UP" part (1) on the sunroof switch when the sunroof is completely closed.

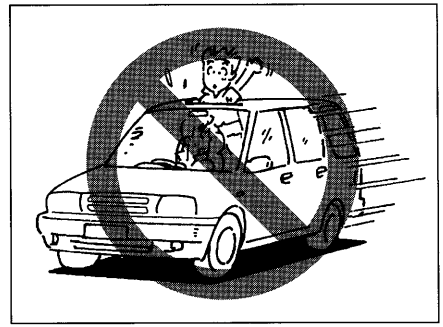

65D612

⚠ WARNING

- **Never allow any part of your body such as hands or head to get out of the sunroof opening while the vehicle is moving.**
- **Be sure there are no hands or other obstructions in the path of the sunroof when you close the sunroof.**
- **Always remove the ignition key or take the keyless push start system remote controller with you when leaving the vehicle even if only for a short time. Also do not leave children alone in a parked vehicle. Unattended children could use the sunroof switches and get trapped by the sunroof.**

NOTICE

Do not put your body weight on the roof around the sunroof such as by sitting on it.

- Be sure to close the sunroof when you leave the vehicle unattended.
- Periodically inspect the guide rail for dirt and clean it if any dirt has accumulated.

Glove Box

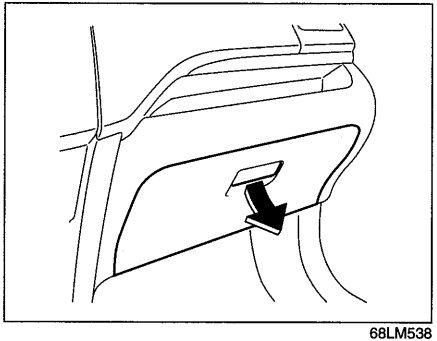

68LM538

To open the glove box, pull the latch lever. To close it, push the lid until it latches securely.

⚠ WARNING

Never drive with the glove box lid open. It could cause injury if an accident occurs.

Instrument Panel Upper Box

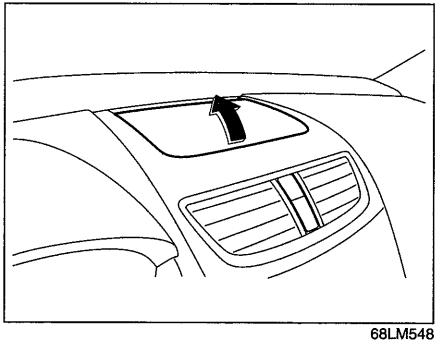

68LM548

To open the instrument panel upper box, push the center front of the lid and then lift up the lid.
To close it, push the lid until the lid latches securely.

⚠ WARNING

Never drive with the instrument panel upper box lid open. It could cause injury if an accident occurs.

⚠ CAUTION

If you park your vehicle outdoors in direct sunlight or in hot weather, the instrument panel upper box can get very hot. So, when parking in such conditions:

- **Do not leave eyeglasses in the upper box. The heat may distort plastic lenses or frames.**
- **Do not leave CDs, CD cases, and other plastic items in the upper box. The heat may distort them.**
- **Do not place flammable items, such as a lighter, in the upper box. The heat may cause a fire.**

Cup Holder and Storage Area

Cup Holder

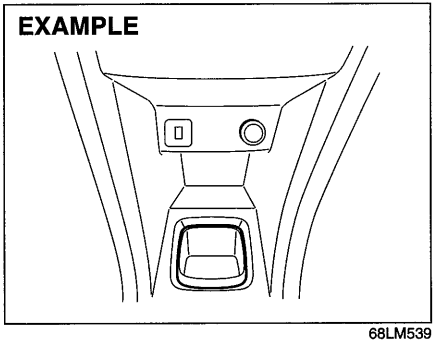

68LM539

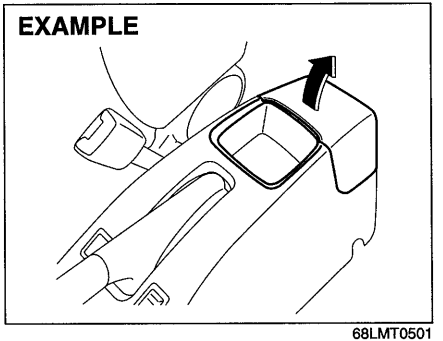

68LMT0501

The cup holders are provided in the center console.

⚠ CAUTION

Do not use the cup holder to hold cups containing hot liquids, or sharp-edged, hard or breakable objects. Objects in the cup holder may be thrown about during a sudden stop or impact, and could cause personal injury.

Bottle holder

Front

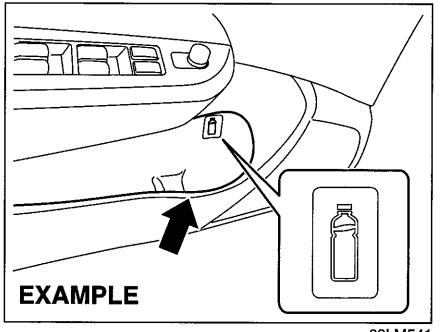

68LM541

Rear (5 door model)

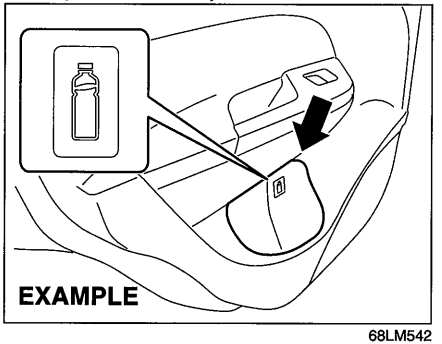

68LM542

Rear (3 door model)

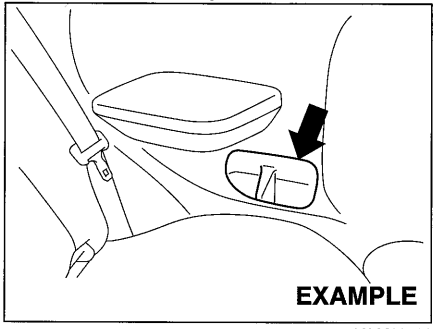

68LM20501

You should hold a bottle with a cap in the holder.

Front Seat Back Pocket (if equipped)

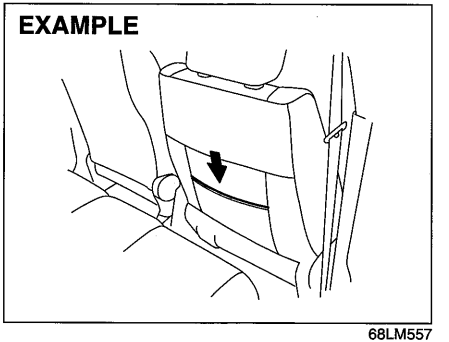

68LM557

This pocket is provided for holding light and soft things such as gloves, newspapers or magazines.

⚠ CAUTION

Do not put hard or breakable objects in the pocket. If an accident occurs, objects such as bottles, cans, etc. can injure the occupants in the rear seat.

Footrest

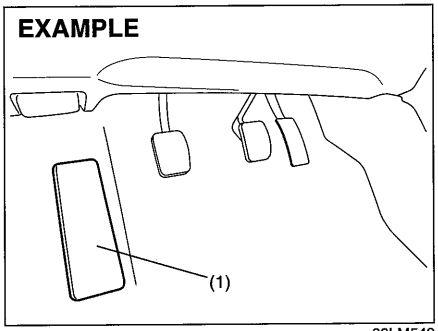

68LM543

Use the footrest (1) as a support for your left foot.

Floor Mats (if equipped)

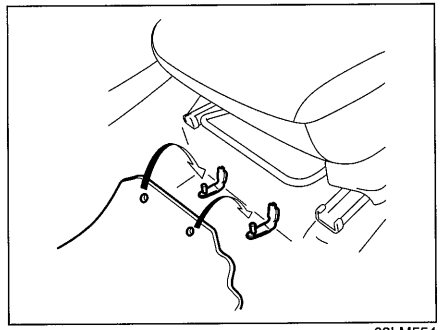

68LM554

To prevent the driver's side floor mat from sliding forward and possibly interfering with the operation of the pedals, genuine SUZUKI floor mats are recommended.
Whenever you put the driver's side floor mat back in the vehicle after it has been removed, be sure to hook the floor mat grommets to the fasteners and position the floor mat properly in the footwell.

When you replace the floor mats in your vehicle with a different type such as all-weather floor mats, we highly recommend using genuine SUZUKI floor mats for proper fitting.

⚠ WARNING

Failure to take the following precautions may result in the driver's side floor mat interfering with the pedals and causing a loss of vehicle control or an accident.

- **Make sure that the floor mat grommets are hooked to the fasteners.**
- **Never place additional floor mats on top of the existing floor mat.**

Shopping Hook (if equipped)

You can hang the shopping bag or other suitable objects on the hook.
This hook is not designed for large or heavy items.

NOTICE

To avoid breaking the hook, do not hang items heavier than following weight.
Luggage compartment hook: 2 kg (4.4 lbs)

Luggage compartment

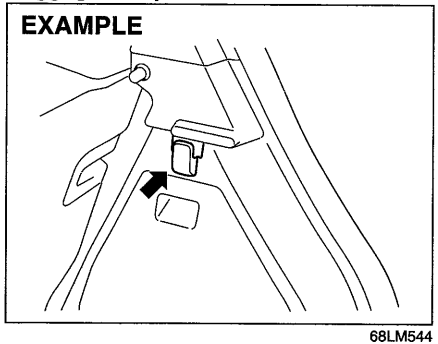

68LM544

Luggage Compartment Cover

Luggage or other cargo placed in the luggage compartment is hidden from view by a luggage compartment cover.

⚠ WARNING

Do not carry items on top of the luggage compartment cover, even if they are small and light. Objects on top of the cover could be thrown about in an accident, causing injury, or could obstruct the driver's rear view.

NOTE:
The luggage compartment cover can be held open. However, if the cover is not correctly installed, it does not function.

Removing the Luggage Compartment Cover

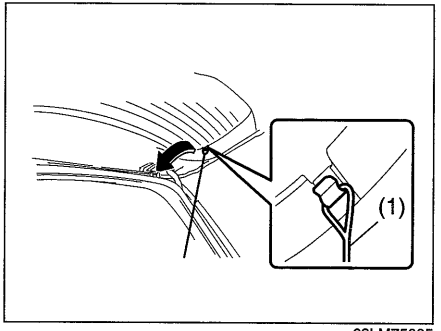

68LM75005

1) Remove the straps (1).

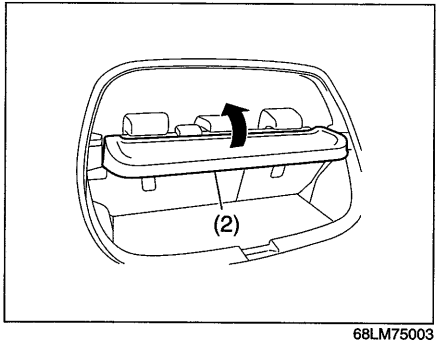

68LM75003

2) Lower the head restraints to their lowest position. Raise the rear end of the luggage compartment cover (2) until the cover touches the head restraints.

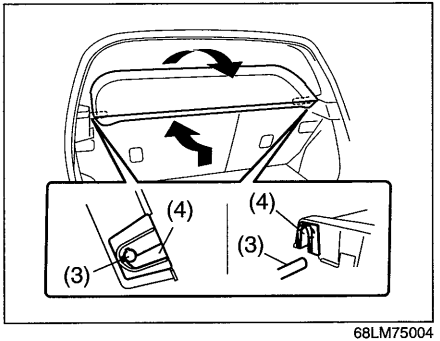

68LM75004

3) Lift the cover slightly and slide it forward to disconnect the bars (3) and holders (4).

Installing the Luggage Compartment Cover

1) Place the holders (4) of the luggage compartment cover (2) over the bars (3) and connect them.
2) Lower the head restraints to their lowest position. Raise the rear end of the luggage compartment cover (2) until the cover touches the head restraints.
3) Return the luggage compartment cover (2) to the flat position.
4) Install the straps (1).

Roof Rack Anchors

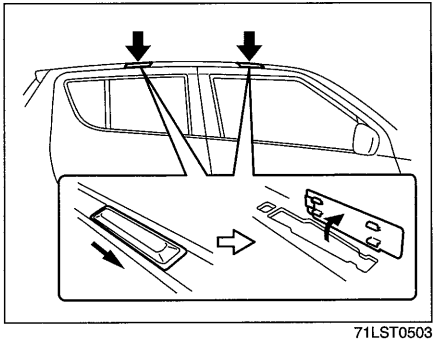

71LST0503

You can use the roof rack anchors to attach the optional roof rack which is available at your SUZUKI dealer. If you use a roof rack, observe the instructions and precautions in this section and provided with the roof rack.

- Make sure the roof rack is securely installed.
- To mount various types of cargo (such as skis, bicycles, etc.) properly, use suitable attachments which are available from your SUZUKI dealer. Be sure to install the attachments properly and securely according to the instructions provided. Do not mount cargo directly on the roof panel. The cargo can damage the roof panel.
- The gross weight of the roof rack plus cargo must not exceed the loading capacity (50 kg (110 lbs)). Also, do not let the gross vehicle weight (fully loaded vehicle including driver, passengers, cargo, roof load and trailer tongue weight) exceed the Gross Vehicle Weight Rating (GVWR) listed in the "SPECIFICATIONS" section of this manual.
- Mount and secure the cargo onto the roof rack properly according to the instructions provided. Be sure to stow the heaviest items at the bottom and distribute the cargo as evenly as possible.
- Do not carry items so large that they hang over the bumpers or the sides of the vehicle, or block your view.
- Secure the front and rear ends of long items – such as wood panels, surfboards and so forth – to both the front and rear of the vehicle. You should protect the painted surfaces of the vehicle from scuffing caused by tie-down ropes.
- Check periodically to make sure the roof rack is securely installed and free from damage.
- For vehicles with roof rack anchors, make sure the anchors are covered with the caps when not in use.

⚠ WARNING

- **Abrupt maneuvers or failure to properly secure cargo can allow the cargo to fly off the vehicle and hit others, causing personal injury or property damage.**
- **Mount cargo securely and avoid abrupt maneuvers such as "jack-rabbit" starts, sharp turns, fast cornering and sudden braking. Check periodically to make sure that cargo is securely fastened.**
- **Large, bulky, long, or flat items can affect vehicle aerodynamics or be caught by the wind, and can reduce vehicle control resulting in an accident and personal injury. Drive cautiously at a safely reduced speed when carrying this type of cargo.**

Frame Hooks

Front

EXAMPLE

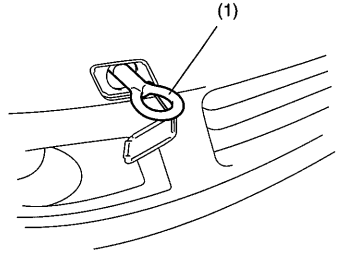

63J117

To tow your vehicle on the road or highway, follow the instruction of "Towing" in "EMERGENCY SERVICE" section.

NOTICE

Never use the towing hook (1) for trailer/train shipping and sea shipping purposes to prevent damage to the vehicle.

To install the hook (1), follow the procedure below.

EXAMPLE

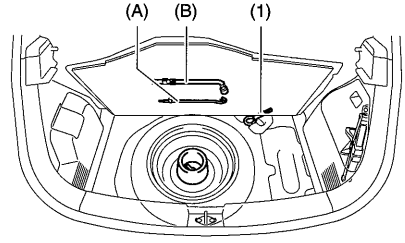

71LMT0512

1) Pick up the towing hook (1), jack handle (A) and wheel brace (B) are stowed in the luggage compartment.

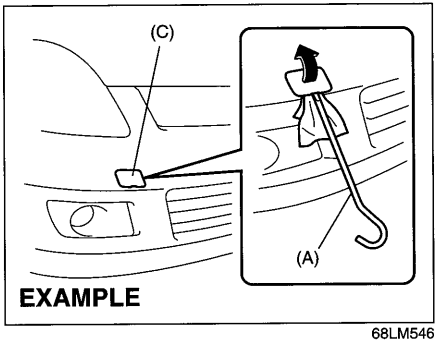

68LM546

2) Remove the cover (C) by using a jack handle (A) covered with a soft cloth as shown in the illustration.

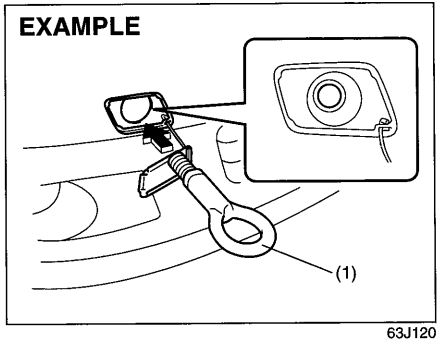

63J120

3) Install the towing hook (1) by hand.

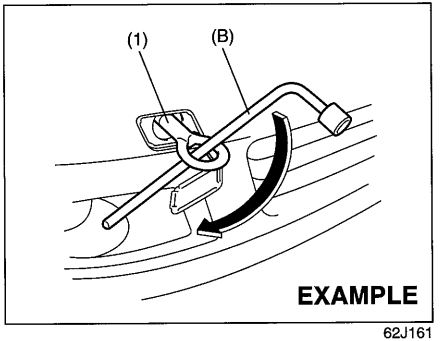

62J161

4) To tighten the towing hook (1), turn it clockwise by using a wheel brace (B) until the hook (1) is securely installed.

NOTICE

When you use the towing hook (1), avoid the driving that gives significant physical shock on hook. Such operation can damage the hook, or the vehicle body.

Do not accelerate suddenly.

To remove the towing hook (1), reverse the procedure used to install the towing hook.

Rear

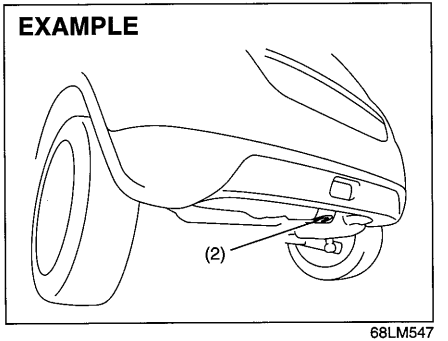

68LM547

The frame hook (2) is provided on the rear of the vehicle for use in towing another vehicle on the road or highway, and sea shipping purposes only.

NOTICE

When you use the frame hook (2), avoid the driving that gives significant physical shock on hook. Such operation can damage the hook, the vehicle body or the drive system.

- **Do not accelerate suddenly.**
- **Do not tow the vehicle heavier than your vehicle.**

Other Hooks

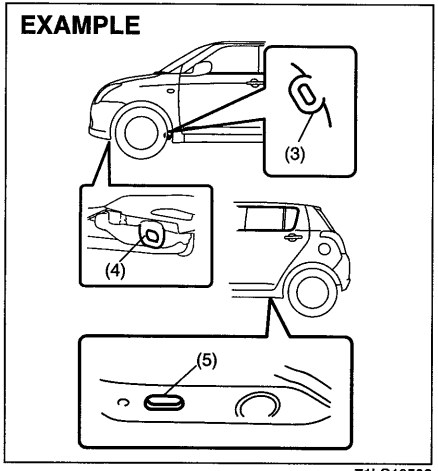

71LS10502

The hooks (3) (if equipped) and frame holes (5) are provided for trailer/train shipping purposes only. The hooks (4) are provided for sea shipping purpose only.

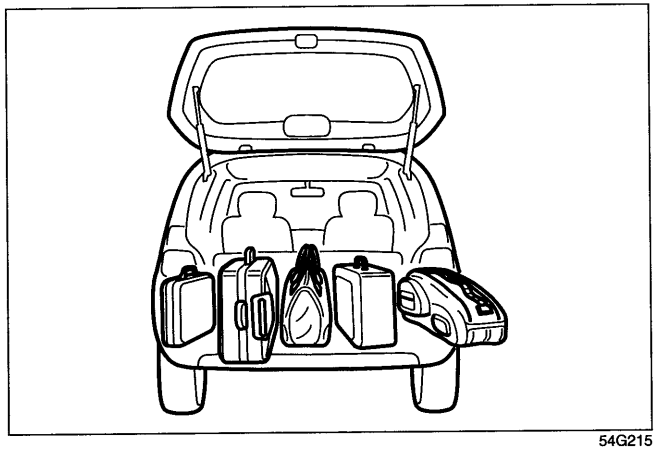

54G215

VEHICLE LOADING AND TOWING

Vehicle Loading 6-1
Trailer Towing 6-1
Towing Your Vehicle (recreational towing) 6-6

Vehicle Loading

Your vehicle was designed for specific weight capacities. The weight capacities of your vehicle are indicated by the Gross Vehicle Weight Rating (GVWR) and the Permissible maximum Axle Weight (PAW, front and rear). The GVWR and PAW (front and rear) are listed in the "SPECIFICATIONS" section.

GVWR – Maximum permissible overall weight of the fully loaded vehicle (including all the occupants, accessories and cargo plus the trailer nose weight if towing a trailer).
PAW – (Front and Rear) Maximum permissible weight on an individual axle.

Actual weight of the loaded vehicle and actual loads at the front and rear axles can only be determined by weighing the vehicle. Compare these weights to the GVWR and PAW (front and rear). If the gross vehicle weight or the load on either axle exceeds these ratings, you must remove enough weight to bring the load down to the rated capacity.

⚠ WARNING

Never overload your vehicle. The gross vehicle weight (sum of the weights of the vehicle, all the occupants, accessories, cargo plus trailer nose weight if towing a trailer) must never exceed the Gross Vehicle Weight Rating (GVWR). In addition, never distribute a load so that the weight on either the front or rear axle exceeds the Permissible maximum Axle Weight (PAW).

⚠ WARNING

Always distribute cargo evenly. To avoid personal injury or damage to your vehicle, always secure cargo to prevent it from shifting if the vehicle moves suddenly. Place heavier objects on the floor and as far forward in the cargo area as possible. Never pile cargo higher than the top of the seat backs.

Trailer Towing

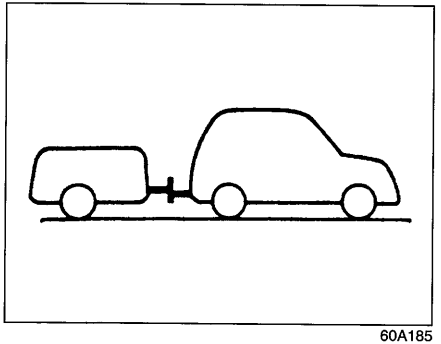

60A185

While towing a trailer can adversely affect handling, durability, and fuel economy, your vehicle can be used to tow a trailer which does not exceed the towing capacity specified below:

Maximum towing capacity (trailer, cargo & tow bar)

Braked trailer:

- Gasoline engine model
  5M/T:1,000 kg (2,205 lbs)
  A/T:200 kg (441 lbs)
  Sport model:1,000 kg (2,205 lbs)
- Diesel engine model
  900 kg (1,984 lbs)

Unbraked trailer:

- Gasoline engine model
  5M/T:400 kg (882 lbs)
  A/T:200 kg (441 lbs)
  Sport model:400 kg (882 lbs)
- Diesel engine model
  400 kg (882 lbs)

NOTICE

Trailer towing puts additional stress on the engine, drive train, and brakes of your vehicle. Never tow a trailer during the first 960 km (600 miles) of vehicle operation.

NOTICE

For Automatic Transaxle vehicles, do not use "D" range when towing on a steep hill. Towing in "D" range when driving on a steep hill can cause automatic transaxle fluid overheating without warning, which can result in transaxle damage.

Tow Bars

Only use a tow bar that is designed to attach to the chassis of your vehicle, and a hitch that is designed to bolt to this bracket.

⚠ WARNING

Never use a tow bar which attaches to the axle or the bumper of your vehicle.

Safety Chains

Always attach safety chains between your vehicle and trailer. Cross safety chains under the nose of the trailer so that the nose will not drop to the road if the trailer becomes separated from the tow bar. Follow the manufacturer's recommendation for attaching safety chains. Always leave just enough slack to permit full turning. Never allow safety chains to drag on the road.

⚠ WARNING

Never attach safety chains to the bumper of your vehicle. Secure connections so that they cannot come loose.

Trailer Lights

Make sure your trailer is equipped with lights which meet local requirements. Always check for the proper operation of all trailer lights before you start to tow.

⚠ WARNING

Never connect trailer lights directly into your vehicle's electrical system, or electrical system damage may occur.

Brakes

⚠ WARNING

If trailer brakes are used, you should follow all instructions provided by the manufacturer. Never connect to the brake system of your vehicle and never take an electrical supply directly from the wiring harness.

Tires

⚠ WARNING

When towing a trailer, it is very important for your vehicle and trailer to have properly inflated tires. Your vehicle's tires should be inflated to the pressures listed on your vehicles Tire Information Label. If laden pressures are listed on the label, the tires should be inflated to the laden pressures. Inflate trailer tires according to the specifications provided by the trailer manufacturer.

Mirrors

Check to see if your vehicle's mirrors meet local requirements for mirrors used on towing vehicles. If they do not, you must install the required mirrors before you tow.

Vehicle/Trailer Loading

To load your vehicle and trailer properly, you must know how to measure gross trailer weight and trailer nose weight.

Gross Trailer Weight is the weight of the trailer plus all the cargo in it. You can measure gross trailer weight by putting the fully loaded trailer on a vehicle scale.

Nose Weight is the downward force exerted on the tow bar by the trailer coupler, with the trailer fully loaded and the coupler at its normal towing height. This weight can be measured using a bathroom scales.

The weight of your loaded trailer (Gross Trailer Weight) should never exceed the "Towing capacity".

Distribute cargo in your trailer so that nose weight is about 10% of gross trailer weight, but does not exceed "Maximum vertical load on trailer hitch point". You should measure gross trailer weight and nose weight before towing to make sure that your load is properly distributed.

⚠ WARNING

Improper weight distribution of your trailer may result in poor vehicle handling and swaying of the trailer. Always make sure that trailer nose weight is about 10% of gross trailer weight, but does not exceed "Maximum vertical load on trailer hitch point". Also make sure that the cargo is properly secured. Failure to observe this requirement may result in an accident.

⚠ WARNING

Never overload your trailer or your vehicle. Gross trailer weight must never exceed the "Towing capacity". Gross vehicle weight (sum of the weights of the vehicle, all the occupants, accessories including tow bars and a trailer hitch, cargo and trailer nose weight) must never exceed the Gross Vehicle Weight Rating (GVWR) listed in the "SPECIFICATIONS" section.

Additional Trailer Towing Warnings

⚠ WARNING

Connect trailer lights and hook up safety chains every time you tow.

NOTICE

Because towing a trailer puts additional stress on your vehicle, more frequent maintenance will be required than under normal driving conditions. Follow the schedule for "Maintenance Recommended under Severe Driving Conditions".

⚠ WARNING

Your vehicle will handle differently when towing a trailer. For your safety and the safety of others, you should observe the following precautions:

- **Practice turning, stopping, and reversing before you begin towing in traffic. Do not tow in traffic until you are confident that you can handle the vehicle and trailer safely.**
- **Never exceed towing speed limits or 80 km/h (50 mph), whichever is lower.**
- **Never drive at a speed that causes shaking or swaying of the trailer. If you notice even the slightest sign of shaking or swaying, slow down.**
- **When roads are wet, slippery or rough, drive at a slower speed than you would on dry, smooth roads. Failure to slow down when road conditions are bad can result in loss of control.**
- **Always have someone guide you when reversing.**
- **Allow adequate stopping distance. Stopping distance is increased when you tow a trailer. For each 16 km/h (10 mph) of speed, allow at least one vehicle and trailer length between you and the vehicle ahead. Follow at a greater distance if roads are wet or slippery.**

(Continued)

⚠ WARNING

(Continued)

- **If the trailer has over-run brakes, apply the brakes gradually to avoid snatching caused by the trailer wheels locking.**
- **Slow down before corners and maintain a steady speed while cornering. Deceleration or acceleration while cornering can result in loss of control. Remember that a larger than normal turning radius is needed because the trailer wheels will be closer than vehicle wheels to the inside of the turn.**
- **Avoid sudden acceleration and stopping of the vehicle. Do not make quick maneuvers unless they are necessary.**
- **Slow down in cross winds and be prepared for gusts of wind from large passing vehicles.**
- **Be careful when overtaking other vehicles. Be sure to allow enough room for your trailer before you change lanes, and signal well in advance.**
- **Slow down and shift into a lower gear before you reach long or steep downhill grades. It is hazardous to attempt downshifting while you are descending a hill.**

(Continued)

⚠ WARNING

(Continued)

- **Avoid "riding" the brakes. This could cause the brakes to overheat resulting in reduced braking efficiency. Use engine braking as much as possible.**
- **Because of the added trailer weight, your engine may overheat on hot days when going up long or steep hills. Pay attention to your engine temperature gauge. If it indicates overheating, pull off the road and stop in a safe place. Refer to "If the Engine Overheats" in "EMERGENCY SERVICE" section.**

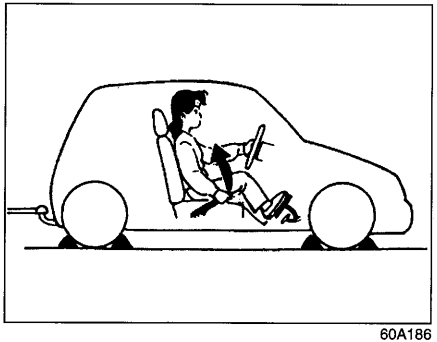

60A186

⚠ WARNING

When parking your vehicle and connected trailer, always use the following procedure:
1) Apply the vehicle's brakes firmly.
2) Have another person place wheel chocks under the wheels of the vehicle and the trailer while you are holding the brakes.
3) Slowly release the brakes until the wheel chocks absorb the load.
4) Fully engage the parking brake.
5) Manual transaxle – turn off the engine, then shift into reverse or first gear.
Automatic transaxle – shift into "P" (Park) and turn off the engine.
(Continued)

⚠ WARNING

(Continued)
When starting out after parking:
1) Depress the clutch and start the engine.
2) Shift into gear, release the parking brake, and slowly pull away from the chocks.
3) Stop, apply the brakes firmly and hold them.
4) Have another person remove the chocks.

Trailer hitch installation points (except Sport model)

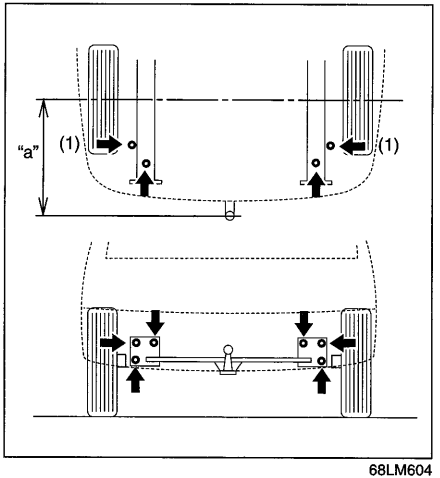

68LM604

(1) Side

Maximum vertical load on trailer hitch point (EU)
60 kg (132 lbs)

Maximum permissible overhang "a"
670 mm (26.4 in.)

Towing Your Vehicle (recreational towing)

Your vehicle may be towed behind another vehicle (such as a motorhome), provided your vehicle is 2 wheel drive (2WD) and you use the proper towing method specified for your vehicle. The towing method you must use depends on the specifications of your vehicle: whether it is a 2 wheel drive (2WD) or 4 wheel drive (4WD) vehicle.

Use the towing instruction table to select the proper towing method for your vehicle, and carefully follow the corresponding instructions. Be sure to use proper towing equipment designed for recreational towing and make sure that towing speed does not exceed 90 km/h (55 mph).

⚠ WARNING

When you tow your vehicle, follow the instructions below to avoid accidents and damage to your vehicle. In addition, be sure to observe government and local requirements regarding vehicle lighting and trailer hitches or tow bars.

⚠ WARNING

A safety chain should always be used when you tow your vehicle.

TOWING INSTRUCTION TABLE

DRIVE TRAIN	TRANSAXLE	TOWING METHOD
2WD	A/T	**A**
	M/T	**A B**
4WD	M/T	**none**

NOTICE

For 4-wheel drive (4WD) models, don't tow your vehicle behind another vehicle such as a motorhome, or the drive train may be seriously damaged.

TOWING METHOD A

FROM THE FRONT:
FRONT WHEELS ON A DOLLY
AND REAR WHEELS ON THE GROUND

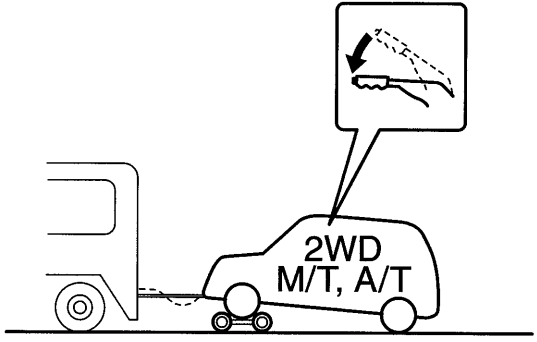

54G212

A: 2WD VEHICLES WITH MANUAL TRANSAXLE OR AUTOMATIC TRANSAXLE

1) Secure the front wheels on a towing dolly according to the instructions provided by the dolly manufacturer.
2) Release the parking brake.

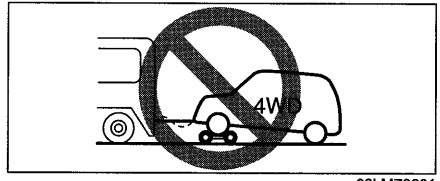

68LM70601

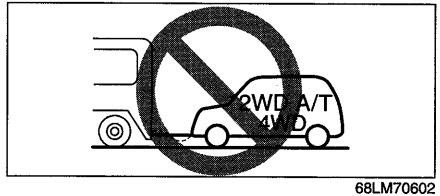

68LM70602

NOTICE

Towing an automatic transaxle vehicle with four wheels on the ground can result in damage to the automatic transaxle.

TOWING METHOD B

FROM THE FRONT:
FOUR WHEELS ON THE GROUND

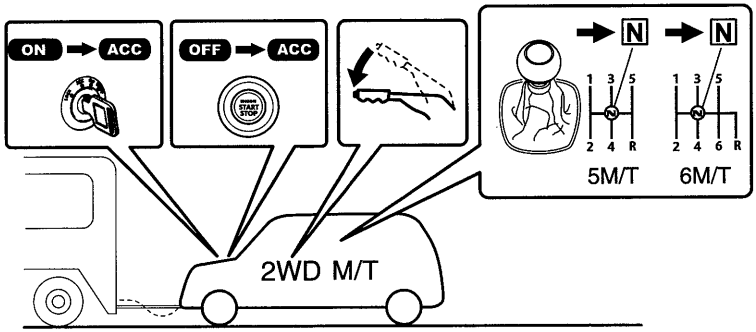

68LM20601

B: VEHICLES WITH MANUAL TRANSAXLE

1) Shift the manual transaxle lever into neutral.
2) Turn the ignition key to the "ACC" position or change the ignition mode to the "ACC" to unlock the steering wheel.
3) Release the parking brake.

NOTICE
The steering column is not strong enough to withstand shocks transmitted from the front wheels during towing. Always unlock the steering wheel before towing.

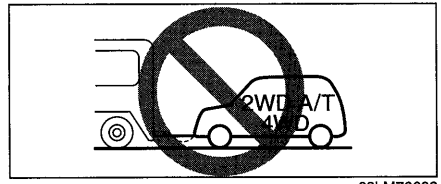

68LM70602

NOTICE
Towing an automatic transaxle vehicle with four wheels on the ground can result in damage to the automatic transaxle.

MEMO

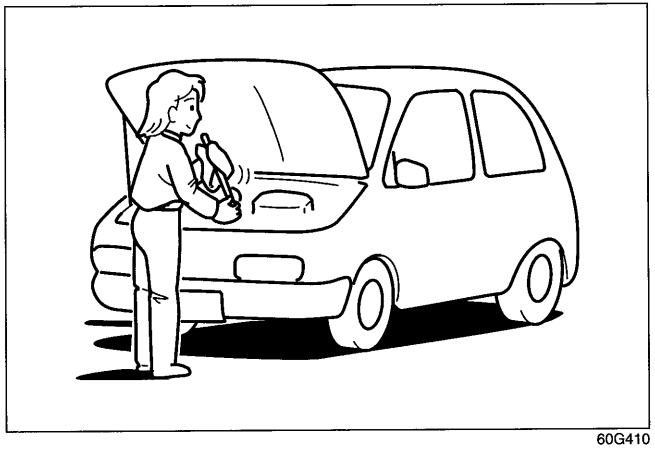

60G410

INSPECTION AND MAINTENANCE

Maintenance Schedule 7-2
Periodic Maintenance Schedule 7-2
Maintenance Recommended under Severe Driving Conditions 7-7
Drive Belt 7-11
Engine Oil and Filter 7-12
Engine Coolant 7-17
Air Cleaner 7-19
Spark Plugs 7-21
Gear Oil 7-22
Clutch Pedal 7-24
Automatic Transaxle (AT) Fluid 7-24
Fuel Filter (Diesel engine) 7-26
Brakes 7-26
Steering 7-28
Tires 7-29
Battery 7-31
Fuses 7-33
Headlight Aiming 7-36
Headlight Washer Fluid 7-37
Bulb Replacement 7-37
Wiper Blades 7-42
Windshield Washer Fluid 7-45
Air Conditioning System 7-46

60B128S

⚠ WARNING

You should take extreme care when working on your vehicle to prevent accidental injury. Here are a few precautions that you should be especially careful to observe:

- **To prevent damage or unintended activation of the air bag system or seat belt pretensioner system, be sure the battery is disconnected and the ignition switch has been in the "LOCK" position or the ignition mode has been "LOCK" (OFF) for at least 90 seconds before performing any electrical service work on your SUZUKI. Do not touch air bag system components, seat belt pretensioner system components or wires. The wires are wrapped with yellow tape or yellow tubing, and the couplers are yellow for easy identification.**
- **Do not leave the engine running in garages or other confined areas.**

(Continued)

⚠ WARNING

(Continued)

- **When the engine is running, keep hands, clothing, tools, and other objects away from the fan and drive belt. Even though the fan may not be moving, it can automatically turn on without warning.**
- **When it is necessary to do service work with the engine running, make sure that the parking brake is set fully and the transaxle is in Neutral (for manual transaxle vehicles) or Park (for automatic transaxle vehicles).**
- **Do not touch ignition wires or other ignition system parts when starting the engine or when the engine is running, or you could receive an electric shock.**
- **Be careful not to touch a hot engine, exhaust manifold and pipes, muffler, radiator and water hoses.**
- **Do not allow smoking, sparks, or flames around fuel or the battery. Flammable fumes are present.**
- **Do not get under your vehicle if it is supported only with the portable jack provided in your vehicle.**
- **Be careful not to cause accidental short circuits between the positive and negative battery terminals.**

(Continued)

⚠ WARNING

(Continued)

- **Keep used oil, coolant, and other fluids away from children and pets. Dispose of used fluids properly; never pour them on the ground, into sewers, etc.**

Maintenance Schedule

The following table shows the times when you should perform regular maintenance on your vehicle. This table shows in miles, kilometers and months when you should perform inspections, adjustments, lubrication and other services. These intervals should be shortened if driving is usually done under severe conditions (refer to "Maintenance Recommended under Severe Driving Conditions").

⚠ WARNING

SUZUKI recommends that maintenance on items marked with an asterisk (*) be performed by your authorized SUZUKI dealer or a qualified service technician. If you are qualified, you may perform maintenance on the unmarked items by referring to the instructions in this section. If you are not sure whether you can successfully complete any of the unmarked maintenance jobs, ask your authorized SUZUKI dealer to do the maintenance for you.

NOTICE

Whenever it becomes necessary to replace parts on your vehicle, it is recommended that you use genuine SUZUKI replacement parts or their equivalent.

Periodic Maintenance Schedule

"R" : Replace or Change
"I" : Inspect, clean, adjust, lubricate or replace as necessary

NOTE:
- *Class 1: Gasoline engine*
- *Class 2: Diesel engine*

NOTE:
This table shows the service schedule up to 180000 km (108000 miles).
Beyond 180000 km (108000 miles), perform the same services at the same intervals shown in the chart.

Interval: This interval should be judged by odometer reading or months, whichever comes first.	km (×1000)	15	30	45	60	75	90
	miles (×1000)	9	18	27	36	45	54
	months	12	24	36	48	60	72
ENGINE							
*1-1 Engine accessory drive belt	[Class 1] Tension check, *Adjustment, *Replacement	–	–	I	–	–	R
	[Class 2] Ribbed belt and tensioner	–	I	–	I	–	I
*1-2 Valve clearance	[Class 1]	–	I	–	I	–	I
1-3 Engine oil and engine oil filter	[Class 1]	R	R	R	R	R	R
	[Class 2] Synthetic oil	Replace when the oil change request light blinks or every 12 months.					
1-4 Engine coolant	SUZUKI LLC: Super (Blue) (#1)	First time only: Replace at 150000 km (90000 miles) or 96 months Second time and after: Replace every 75000 km (45000 miles) or 48 months					
	SUZUKI LLC: Standard (Green)	–	–	R	–	–	R
*1-5 Exhaust system (except catalyst)		–	I	–	I	–	I
IGNITION							
2-1 Spark plugs							
When **unleaded** fuel is used	[Class 1] (Highly recommended) Iridium plug (Except Sport model) (#2)	–	–	–	–	–	–
	[Class 1] (Highly recommended) Iridium plug (Sport model) (#2)	–	–	–	R	–	–
	[Class 1] (Standard type) Nickel plug	–	–	R	–	–	R
When **leaded** fuel is used, refer to "Severe Driving Condition" schedule.							
FUEL							
3-1 Air cleaner filter element	[Class 1] Paved-road	I	I	R	I	I	R
	[Class 2] Paved-road	–	–	R	–	–	R
	Dusty condition	Refer to "Severe Driving condition" schedule.					
*3-2 Fuel lines		–	I	–	I	–	I
*3-3 Fuel filter	[Class 2]	–	R	–	R	–	R
		Drain water every 15000 km (9000 miles) or 12 months.					
*3-4 Fuel tank		–	–	I	–	–	I
EMISSION CONTROL SYSTEM							
*4-1 PCV valve	[Class 1]	–	–	–	–	–	I
*4-2 Fuel evaporative emission control system	[Class 1]	–	–	–	–	–	I

For Item 1-3: The engine oil level should be checked regularly.
For Item 2-1: "Nickel plugs", replace every 50000 km if the local law requires.

#1: Be sure to perform the engine coolant level check under the daily inspection in "OPERATING YOUR VEHICLE" section.
If you replace the engine coolant other than SUZUKI LLC: Super (Blue), follow the schedule of SUZUKI LLC: Standard (Green).
#2: If you replace the spark plugs other than iridium plug, follow the schedule of Nickel plug.

Interval: This interval should be judged by odometer reading or months, whichever comes first.		km (×1000)	105	120	135	150	165	180
		miles (×1000)	63	72	81	90	99	108
		months	84	96	108	120	132	144
ENGINE								
*1-1 Engine accessory drive belt	[Class 1] Tension check, *Adjustment, *Replacement		–	–	I	–	–	R
	[Class 2] Ribbed belt and tensioner		–	I	–	R	–	I
*1-2 Valve clearance	[Class 1]		–	I	–	I	–	I
1-3 Engine oil and engine oil filter	[Class 1]		R	R	R	R	R	R
	[Class 2] Synthetic oil		Replace when the oil change request light blinks or every 12 months.					
1-4 Engine coolant	SUZUKI LLC: Super (Blue) (#1)		First time only: Replace at 150000 km (90000 miles) or 96 months Second time and after: Replace every 75000 km (45000 miles) or 48 months					
	SUZUKI LLC: Standard (Green)		–	–	R	–	–	R
*1-5 Exhaust system (except catalyst)			–	I	–	I	–	I
IGNITION								
2-1 Spark plugs								
When **unleaded** fuel is used	[Class 1] (Highly recommended) Iridium plug (Except Sport model) (#2)		R	–	–	–	–	–
	[Class 1] (Highly recommended) Iridium plug (Sport model) (#2)		–	R	–	–	–	R
	[Class 1] (Standard type) Nickel plug		–	–	R	–	–	R
When **leaded** fuel is used, refer to "Severe Driving Condition" schedule.								
FUEL								
3-1 Air cleaner filter element	[Class 1] Paved-road		I	I	R	I	I	R
	[Class 2] Paved-road		–	–	R	–	–	R
	Dusty condition		Refer to "Severe Driving condition" schedule.					
*3-2 Fuel lines			–	I	–	I	–	I
*3-3 Fuel filter	[Class 2]		–	R	–	R	–	R
			Drain water every 15000 km (9000 miles) or 12 months.					
*3-4 Fuel tank			–	–	I	–	–	I
EMISSION CONTROL SYSTEM								
*4-1 PCV valve	[Class 1]		–	–	–	–	–	I
*4-2 Fuel evaporative emission control system	[Class 1]		–	–	–	–	–	I

For Item 1-3: The engine oil level should be checked regularly.
For Item 2-1: "Nickel plugs", replace every 50000 km if the local law requires.

#1: Be sure to perform the engine coolant level check under the daily inspection in "OPERATING YOUR VEHICLE" section.
If you replace the engine coolant other than SUZUKI LLC: Super (Blue), follow the schedule of SUZUKI LLC: Standard (Green).
#2: If you replace the spark plugs other than iridium plug, follow the schedule of Nickel plug.

Interval: This interval should be judged by odometer reading or months, whichever comes first.		km (×1000)	15	30	45	60	75	90
		miles (×1000)	9	18	27	36	45	54
		months	12	24	36	48	60	72
BRAKE								
*5-1 Brake discs and pads			I	I	I	I	I	I
Brake drums and shoes (if equipped)			–	I	–	I	–	I
*5-2 Brake hoses and pipes			–	I	–	I	–	I
5-3 Brake fluid	Check, *Replacement		–	R	–	R	–	R
5-4 Brake lever and cable	Check, *Adjustment (1st 15000 km only)		I	–	–	–	–	–
CHASSIS AND BODY								
*6-1 Clutch (Pedal and fluid level)			–	I	–	I	–	I
6-2 Tires/Wheels			I	I	I	I	I	I
*6-3 Drive axle boots/Propeller shafts (4WD)			–	–	I	–	–	I
*6-4 Suspension system			–	I	–	I	–	I
*6-5 Steering system			–	I	–	I	–	I
*6-6 Manual transaxle oil	Genuine "SUZUKI GEAR OIL 75W-80"		–	I	–	I	–	I
	Other than "SUZUKI GEAR OIL 75W-80" (I: 1st 15000 km only)		I	–	R	–	R	–
6-7 Automatic transaxle	Fluid level		–	I	–	I	–	I
	*Fluid change		Replace every 165000 km (99000 miles).					
	*Fluid hose		–	–	–	I	–	–
*6-8 Transfer oil (4WD)			–	I	–	I	–	I
*6-9 Rear differential oil (4WD)			–	I	–	I	–	I
6-10 All latches, hinges and locks			–	I	–	I	–	I
*6-11 Air conditioner filter element (if equipped)			–	I	R	–	I	R

Interval: This interval should be judged by odometer reading or months, whichever comes first.							
	km (×1000)	105	120	135	150	165	180
	miles (×1000)	63	72	81	90	99	108
	months	84	96	108	120	132	144
BRAKE							
*5-1 Brake discs and pads		I	I	I	I	I	I
Brake drums and shoes (if equipped)		–	I	–	I	–	I
*5-2 Brake hoses and pipes		–	I	–	I	–	I
5-3 Brake fluid	Check, *Replacement	–	R	–	R	–	R
5-4 Brake lever and cable	Check, *Adjustment (1st 15000 km only)	–	–	–	–	–	–
CHASSIS AND BODY							
*6-1 Clutch (Pedal and fluid level)		–	I	–	I	–	I
6-2 Tires/Wheels		I	I	I	I	I	I
*6-3 Drive axle boots/Propeller shafts (4WD)		–	–	I	–	–	I
*6-4 Suspension system		–	I	–	I	–	I
*6-5 Steering system		–	I	–	I	–	I
*6-6 Manual transaxle oil	Genuine "SUZUKI GEAR OIL 75W-80"	–	I	–	R	–	I
	Other than "SUZUKI GEAR OIL 75W-80" (I: 1st 15000 km only)	R	–	R	–	–	R
6-7 Automatic transaxle	Fluid level	–	I	–	I	–	I
	*Fluid change	Replace every 165000 km (99000 miles).					
	*Fluid hose	–	I	–	–	–	I
*6-8 Transfer oil (4WD)		–	I	–	R	–	I
*6-9 Rear differential oil (4WD)		–	I	–	R	–	I
6-10 All latches, hinges and locks		–	I	–	I	–	I
*6-11 Air conditioner filter element (if equipped)		–	I	R	–	I	R

Some maintenance items are required to be serviced at times other than the regular maintenance times shown at the top of above table. These items can be serviced at an earlier service opportunity according to customer's maintenance convenience. Their next maintenance service should be done within the specified period.

For further details, see "Daily Inspection Checklist" in the "OPERATING YOUR VEHICLE" section.

⚠ WARNING

The shock absorbers are filled with high pressure gas. Never attempt to disassemble them or throw them into a fire. Avoid storing them near a heater or heating device. When scrapping the absorber, the gas must be released from the absorber safely. Ask your dealer for assistance.

NOTE:
4WD: 4-wheel drive

Maintenance Recommended under Severe Driving Conditions

Follow this schedule if your vehicle is mainly operated under one or more of the following conditions:

- **When most trips are less than 6 kilometers (4 miles).**
- **When most trips are less than 16 kilometers (10 miles) and outside temperature remain below freezing.**
- **Idling and/or low-speed operation in stop-and-go traffic**
- **Operating in extremely cold weather and/or on salted roads**
- **Operating in rough and/or muddy areas**
- **Operating in dusty areas**
- **Repeated high speed drive or high engine revolutions**
- **Towing a trailer, if admitted**

Schedule should also be followed if the vehicle is used for delivery service, police, taxi or other commercial applications.

"R": Replace or change

"I": Inspect, clean, adjust, lubricate or replace as necessary

NOTE:

- *Class 1: Gasoline engine*
- *Class 2: Diesel engine*

Interval: This interval should be judged by odometer reading or months, whichever comes first.	km (×1000)	7.5	15	22.5	30	37.5	45
	miles (×1000)	4.5	9	13.5	18	22.5	27
	months	6	12	18	24	30	36
ENGINE							
*1-1 Engine accessory drive belt	Tension check, *Adjustment, *Replacement	–	I	–	I	–	R
*1-2 Valve clearance	[Class 1]	–	–	–	I	–	–
1-3 Engine oil and engine oil filter	[Class 1]	R	R	R	R	R	R
	[Class 2]	Replace when the oil change request light blinks or every 6 months					
1-4 Engine coolant	SUZUKI LLC: Super (Blue) (#1)	First time only: Replace at 150000 km (90000 miles) or 96 months Second time and after: Replace every 75000 km (45000 miles) or 48 months					
	SUZUKI LLC: Standard (Green)	–	–	–	–	–	R
*1-5 Exhaust system (except catalyst)		–	–	–	I	–	–
IGNITION							
2-1 Spark plugs	[Class 1] (Highly recommended) Iridium plug (#2)	–	–	–	R	–	–
	[Class 1] (Standard type) Nickel plug	Replace every 10000 km (6000 miles) or 8 months					

#1: Be sure to perform the engine coolant level check under the daily inspection in "OPERATING YOUR VEHICLE" section.
If you replace the engine coolant other than SUZUKI LLC: Super (Blue), follow the schedule of SUZUKI LLC: Standard (Green).

#2: If you replace the spark plugs other than iridium plug, follow the schedule of Nickel plug.

"R": Replace or change
"I": Inspect, clean, adjust, lubricate or replace as necessary

NOTE:
- *Class 1: Gasoline engine*
- *Class 2: Diesel engine*

Interval: This interval should be judged by odometer reading or months, whichever comes first.	km (×1000)	52.5	60	67.5	75	82.5	90
	miles (×1000)	31.5	36	40.5	45	49.5	54
	months	42	48	54	60	66	72
ENGINE							
*1-1 Engine accessory drive belt	Tension check, *Adjustment, *Replacement	–	I	–	I	–	R
*1-2 Valve clearance	[Class 1]	–	I	–	–	–	I
1-3 Engine oil and engine oil filter	[Class 1]	R	R	R	R	R	R
	[Class 2]	Replace when the oil change request light blinks or every 6 months					
1-4 Engine coolant	SUZUKI LLC: Super (Blue) (#1)	First time only: Replace at 150000 km (90000 miles) or 96 months Second time and after: Replace every 75000 km (45000 miles) or 48 months					
	SUZUKI LLC: Standard (Green)	–	–	–	–	–	R
*1-5 Exhaust system (except catalyst)		–	I	–	–	–	I
IGNITION							
2-1 Spark plugs	[Class 1] (Highly recommended) Iridium plug (#2)	–	R	–	–	–	R
	[Class 1] (Standard type) Nickel plug	Replace every 10000 km (6000 miles) or 8 months					

#1: Be sure to perform the engine coolant level check under the daily inspection in "OPERATING YOUR VEHICLE" section.
If you replace the engine coolant other than SUZUKI LLC: Super (Blue), follow the schedule of SUZUKI LLC: Standard (Green).
#2: If you replace the spark plugs other than iridium plug, follow the schedule of Nickel plug.

Interval: This interval should be judged by odometer reading or months, whichever comes first.		km (×1000)	7.5	15	22.5	30	37.5	45
		miles (×1000)	4.5	9	13.5	18	22.5	27
		months	6	12	18	24	30	36
FUEL								
3-1 Air cleaner filter element *2			Inspect every 2500 km (1500 miles) Replace every 30000 km (18000 miles) or 24 months					
*3-2 Fuel lines			–	–	–	I	–	–
*3-3 Fuel filter	[Class 2]		–	–	–	R	–	–
*3-4 Fuel tank			Drain water every 15000 km (9000 miles) or 12 months.					
EMISSION CONTROL SYSTEM			–	–	–	–	–	I
*4-1 PCV valve	[Class 1]		–	–	–	–	–	–
*4-2 Fuel evaporative emission control system	[Class 1]		–	–	–	–	–	–
BRAKE								
*5-1 Brake discs and pads			–	I	–	I	–	I
Brake drums and shoes (if equipped)			–	–	–	I	–	–
*5-2 Brake hoses and pipes			–	–	–	I	–	–
5-3 Brake fluid	Check, *Replacement		–	–	–	R	–	–
5-4 Brake lever and cable	Check, *Adjustment (1st 15000 km only)		–	I	–	–	–	–
CHASSIS AND BODY								
*6-1 Clutch (Pedal and fluid level)			–	–	–	I	–	–
6-2 Tires/Wheels			–	I	–	I	–	I
*6-3 Wheel bearings			–	I	–	I	–	I
*6-4 Drive axle boots/Propeller shafts (4WD)			–	I	–	I	–	I
*6-5 Suspension system			–	–	–	I	–	–
*6-6 Steering system			–	–	–	I	–	–
*6-7 Manual transaxle oil	Genuine "SUZUKI GEAR OIL 75W-80"		–	–	–	I	–	–
	Other than "SUZUKI GEAR OIL 75W-80"		–	–	–	R	–	–
6-8 Automatic transaxle	Fluid level		–	–	–	I	–	–
	*Fluid change		–	–	–	R	–	–
	*Fluid hose		–	–	–	–	–	–
*6-9 Transfer oil (4WD)			–	–	–	R	–	–
*6-10 Rear differential oil (4WD)			–	–	–	R	–	–
6-11 All latches, hinges and locks			–	–	–	I	–	–
*6-12 Air conditioner filter element (if equipped) *1			–	I	–	I	–	R

Interval: This interval should be judged by odometer reading or months, whichever comes first.		km (×1000)	52.5	60	67.5	75	82.5	90
		miles (×1000)	31.5	36	40.5	45	49.5	54
		months	42	48	54	60	66	72
FUEL								
3-1 Air cleaner filter element *2			Inspect every 2500 km (1500 miles) Replace every 30000 km (18000 miles) or 24 months					
*3-2 Fuel lines			–	I	–	–	–	I
*3-3 Fuel filter	[Class 2]		–	R	–	–	–	R
			Drain water every 15000 km (9000 miles) or 12 months.					
*3-4 Fuel tank			–	–	–	–	–	I
EMISSION CONTROL SYSTEM								
*4-1 PCV valve	[Class 1]		–	–	–	–	–	I
*4-2 Fuel evaporative emission control system	[Class 1]		–	–	–	–	–	I
BRAKE								
*5-1 Brake discs and pads			–	I	–	I	–	I
Brake drums and shoes (if equipped)			–	I	–	–	–	I
*5-2 Brake hoses and pipes			–	I	–	–	–	I
5-3 Brake fluid	Check, *Replacement		–	R	–	–	–	R
5-4 Brake lever and cable	Check, *Adjustment (1st 15000 km only)		–	–	–	–	–	–
CHASSIS AND BODY								
*6-1 Clutch (Pedal and fluid level)			–	I	–	–	–	I
6-2 Tires/Wheels			–	I	–	I	–	I
*6-3 Wheel bearings			–	I	–	I	–	I
*6-4 Drive axle boots/Propeller shafts (4WD)			–	I	–	I	–	I
*6-5 Suspension system			–	I	–	–	–	I
*6-6 Steering system			–	I	–	–	–	I
*6-7 Manual transaxle oil	Genuine "SUZUKI GEAR OIL 75W-80"		–	R	–	–	–	I
	Other than "SUZUKI GEAR OIL 75W-80"		–	R	–	–	–	R
6-8 Automatic transaxle	Fluid level		–	I	–	–	–	I
	*Fluid change		–	R	–	–	–	R
	*Fluid hose		–	I	–	–	–	–
*6-9 Transfer oil (4WD)			–	R	–	–	–	R
*6-10 Rear differential oil (4WD)			–	R	–	–	–	R
6-11 All latches, hinges and locks			–	I	–	–	–	I
*6-12 Air conditioner filter element (if equipped) *1			–	I	–	I	–	R

NOTE:
This table shows the service schedule up to 90000 km (54000 miles).
Beyond 90000 km (54000 miles), perform the same services at the same intervals shown in the chart.
**1 Clean more frequently if the air flow from the air conditioner decreases.*
**2 Inspect more frequently if the vehicle is used under dusty conditions.*

NOTE:
4WD: 4-wheel drive

Drive Belt

⚠ WARNING

When the engine is running, keep hands, hair, clothing, tools, etc. away from the moving fan and drive belts.

Make sure the drive belt tension is correct. If the belt is too loose, insufficient battery charging, engine overheating, poor power steering, poor air conditioning, or excessive belt wear can result. When you press the belt with your thumb midway between the pulleys, there should be a deflection according to the following chart.

The belts should also be examined to ensure that they are not damaged.

If you need to replace or adjust the belt have it done by your SUZUKI dealer.

For Gasoline Engine Model (Except Sport model)

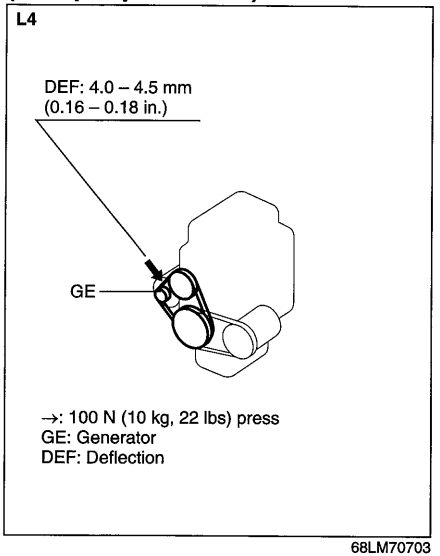

68LM70703

For Gasoline Engine Model (Sport model)

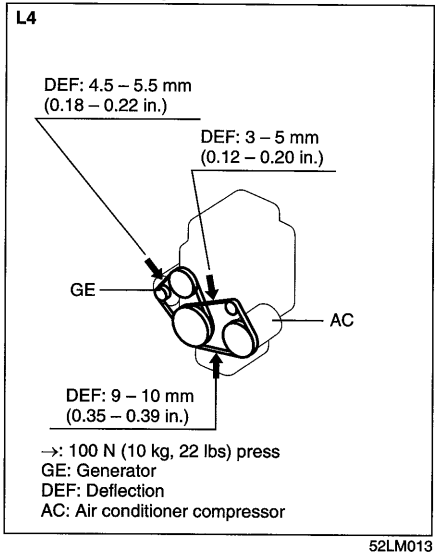

52LM013

For Diesel Engine Model

The drive belts tension is adjusted automatically

Engine Oil and Filter

Specified Oil

For Gasoline Engine Model (Except Sport model)

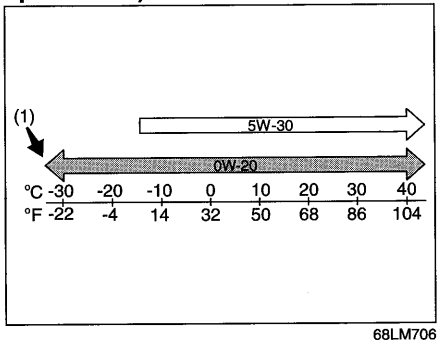

68LM706

(1) Preferred

Be sure that the engine oil you use comes under the quality classification of SL or SM. Select the appropriate oil viscosity according to the above chart.

SAE 0W-20 (1) is the best choice for good fuel economy, and good starting in cold weather.

NOTE:
The engine may not start if 5W-30 engine oil is used below -15°C (5°F).

For Gasoline Engine Model (Sport model)

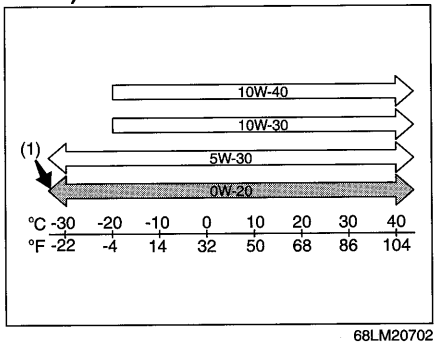

68LM20702

(1) Preferred

Be sure that the engine oil you use comes under the quality classification of SG, SH, SJ, SL or SM. Select the appropriate oil viscosity according to the above chart.

SAE 0W-20 (1) is the best choice for good fuel economy, and good starting in cold weather.

For Diesel Engine Model

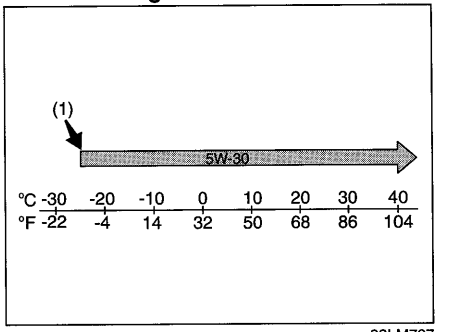

68LM727

(1) Preferred

Be sure that the engine oil you use comes under the quality classification of ACEA C2 or C3 which is mandatory for DPF®. Select the appropriate oil viscosity according to the above chart.

SAE 5W-30 (1) is the best choice for good fuel economy, and good starting in cold weather.

NOTICE
Use only the recommended ACEA C2 or C3. Use of non-recommended engine oil will cause a damage of the diesel engine and DPF®.

Oil Level Check

(For Gasoline Engine Model)

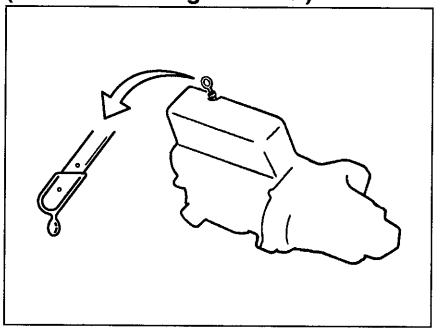

80G064

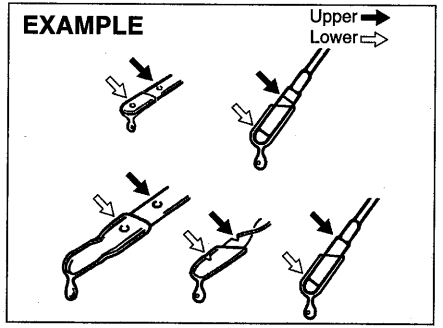

52D084

(For Diesel Engine Model)

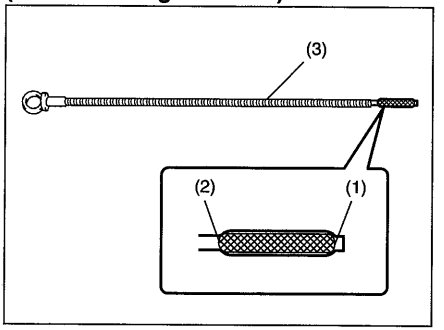

84E012

(1) MIN
(2) MAX
(3) Engine oil dipstick

It is important to keep the engine oil at the correct level for proper lubrication of your vehicle's engine. Check the oil level with the vehicle on a level surface. The oil level indication may be inaccurate if the vehicle is on a slope. The oil level should be checked either before starting the engine or at least 5 minutes after stopping the engine.
The handle of the engine oil dipstick is colored yellow for easy identification.

Pull out the oil dipstick, wipe oil off with a clean cloth, insert the dipstick all the way into the engine, then remove it again. The oil on the stick should be between the upper and lower limits shown on the stick. If the oil level indication is near the lower limit, add enough oil to raise the level to the upper limit.

NOTICE
Failure to check the oil level regularly could lead to serious engine trouble due to insufficient oil.

NOTICE
(For Diesel Engine Model) **Do not top up the oil over the MAX limit. Too much oil causes serious engine trouble.**

NOTE:
When the soot particles accumulated in the DPF® are combusted, the amount of the engine oil may increase due to the dilution with the fuel. This is not a vehicle malfunction. The soot particles accumulated in the DPF® are combusted automatically during driving. However, they may not be combusted in the following cases.

- *When you drive at low speed for a long time.*
- *When you repeat a short-time or short-distance driving.*

1) When the DPF® warning light comes on, drive at a speed of 50km/h (31 mph) or higher for more than 25 minutes to regenerate the DPF® properly. For details, refer to "Diesel Particulate Filter" in the OPERATING YOUR VEHICLE.
2) When the oil change request light blinks, change the engine oil.
3) When the engine oil level exceeds the MAX level on the dipstick, consult your SUZUKI dealer.

Refilling

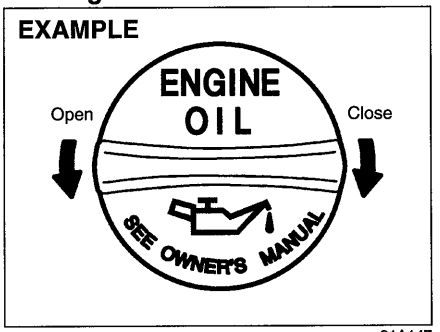

81A147

Remove the oil filler cap and pour oil slowly through the filler hole to bring the oil level to the upper limit on the dipstick. Be careful not to overfill. Too much oil is almost as bad as too little oil. After refilling, start the engine and allow it to idle for about a minute. Stop the engine, wait about 5 minutes and check the oil level again.

Changing Engine Oil and Filter

Drain the engine oil while the engine is still warm.

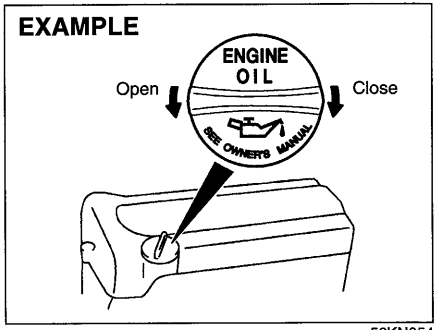

56KN054

1) Remove the oil filler cap.
2) Place a drain pan under the drain plug.
3) Using a wrench, remove the drain plug and drain out the engine oil.

⚠ CAUTION

The engine oil temperature may be high enough to burn your fingers when the drain plug is loosened. Wait until the drain plug is cool enough to touch with your bare hands.

EXAMPLE

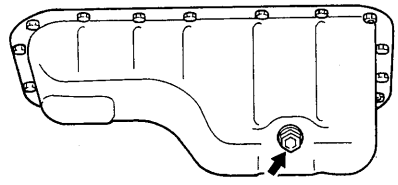

60G306

Tightening torque for drain plug
Gasoline engine :
35 Nm (3.5 kg-m, 25.3 lb-ft)
Diesel engine :
20 Nm (2.0 kg-m, 14.5 lb-ft)

⚠ WARNING

New and used oil can be hazardous. Children and pets may be harmed by swallowing new or used oil. Keep new and used oil and used oil filters away from children and pets.
Repeated, prolonged contact with used engine oil may cause skin cancer.
Brief contact with used oil may irritate skin.

(Continued)

⚠ WARNING

(Continued)
To minimize your exposure to used oil, wear a long-sleeve shirt and moisture-proof gloves (such as dish-washing gloves) when changing oil. If oil contacts your skin, wash thoroughly with soap and water.
Launder any clothing or rags if wet with oil.
Recycle or properly dispose of used oil and filters.

4) Reinstall the drain plug and gasket. Tighten the plug with a wrench to the specified torque.

NOTE:
(For Diesel Engine Model)
- *Whenever the engine oil is changed, the oil life monitoring must be reset to monitor the next oil change timing properly whether the oil change request light comes on or not and whatever the remaining distance of oil life on the information display shows. To reset the oil life monitoring, consult your SUZUKI dealer.*
- *For more information of the oil change request light and oil life monitoring, refer to "Oil change request light (For Diesel Engine Model)" and "Information Display" in the "INSTRUMENT PANEL" section.*

Replace the Oil Filter

1) Using an oil filter wrench, turn the oil filter counterclockwise and remove it.
2) Using a clean rag, wipe off the mounting surface on the engine where the new filter will be seated.
3) Smear a little engine oil around the rubber gasket of the new oil filter.
4) Screw on the new filter by hand until the filter gasket contacts the mounting surface.

(For Gasoline Engine Model)

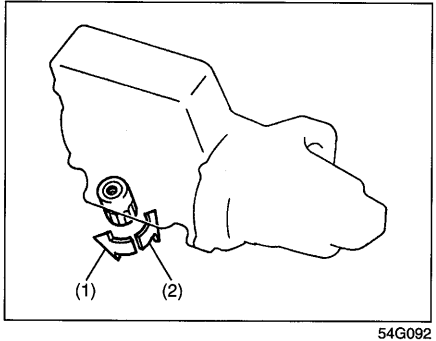

54G092

(1) Loosen
(2) Tighten

Tightening (viewed from filter top)

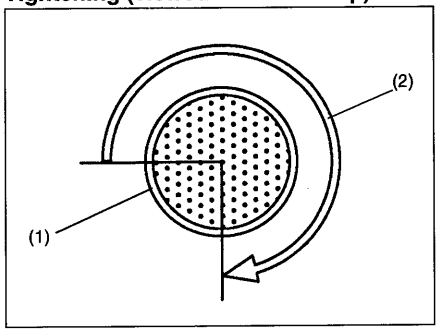

54G093

(1) Oil filter
(2) 3/4 turn

(For Diesel Engine Model)

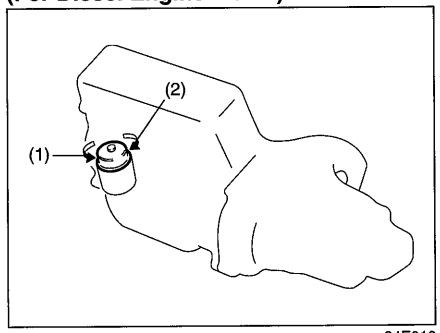

84E016

(1) Loosen
(2) Tighten

NOTICE
To tighten the oil filter properly, it is important to accurately identify the position at which the filter gasket first contacts the mounting surface.

5) Tighten the filter specified turn from the point of contact with the mounting surface (or to the specified torque) using an oil filter wrench.

Tightening torque for oil filter
3/4 turn or
Gasoline engine :
14 Nm (1.4 kg-m, 10.1 lb-ft)
Diesel engine :
25 Nm (2.5 kg-m, 18.5 lb-ft)

NOTICE
To prevent oil leakage, make sure that the oil filter is tight, but do not over-tighten it.

Refill with Oil and Check for Leaks

1) Pour oil through the filler hole and install the filler cap.
   For the approximate capacity of the oil, refer to the "Capacities" item in the "SPECIFICATIONS" section.
2) Start the engine and look carefully for leaks at the oil filter and drain plug. Run the engine at various speeds for at least 5 minutes.
3) Stop the engine and wait about 5 minutes. Check the oil level again and add oil if necessary. Check for leaks again.

NOTICE

- **When replacing the oil filter, it is recommended that you use a genuine SUZUKI replacement filter. If you use an aftermarket filter, make sure it is of equivalent quality and follow the manufacturer's instructions.**
- **Oil leaks from around the oil filter or drain plug indicate incorrect installation or gasket damage. If you find any leaks or are not sure that the filter has been properly tightened, have the vehicle inspected by your SUZUKI dealer.**

Engine Coolant

Selection of Coolant

NOTICE

SUZUKI LLC: Super (Blue) coolant; SUZUKI LLC: Super (Blue) coolant is already diluted to the proper percentage. Do not dilute with distilled water additionally. Doing so may result in the possibility of freezing coolant and/or overheating.

To maintain optimum performance and durability of your engine, use SUZUKI Genuine Coolant or equivalent.

NOTE:
If you replace the engine coolant other than the SUZUKI LLC: Super (Blue), follow the schedule of SUZUKI LLC: Standard (Green). To see the detail of the maintenance schedule, refer to "Periodic Maintenance Schedule" in this section.

This type of coolant is best for your cooling system as it:

- Helps maintain proper engine temperature.
- Gives proper protection against freezing and boiling.
- Gives proper protection against corrosion and rust.

Failure to use the proper coolant can damage your cooling system. Your authorized SUZUKI dealer can help you select the proper coolant.

NOTICE

To avoid damaging your cooling system:

- **Always use a high quality ethylene glycol base non-silicate type coolant diluted with distilled water at the correct mixture concentration.**
- **Make sure that the proper mix is 50/50 coolant to distilled water and in no case higher than 70/30. Concentrations greater than 70/30 coolant to distilled water will cause overheating conditions.**
- **Do not use straight coolant nor plain water (except SUZUKI LLC: Super (Blue)).**
- **Do not add extra inhibitors or additives. They may not be compatible with your cooling system.**
- **Do not mix different types of base coolants. Doing so may result in accelerated seal wear and/or the possibility of severe overheating and extensive engine/automatic transaxle damage.**

Coolant Level Check

Check the coolant level at the reservoir tank, not at the radiator. With the engine cool, the coolant level should be between the "FULL" and "LOW" marks.

Adding Coolant

⚠ WARNING

Engine coolant is harmful or fatal if swallowed or inhaled. Do not drink antifreeze or coolant solution. If swallowed, do not induce vomiting. Immediately contact a poison control center or a physician. Avoid inhaling mist or hot vapors; if inhaled, remove to fresh air. If coolant gets in eyes, flush eyes with water and seek medical attention. Wash thoroughly after handling. Solution can be poisonous to animals. Keep out of the reach of children and animals.

NOTICE

SUZUKI LLC: Super (Blue) coolant;
SUZUKI LLC: Super (Blue) coolant is already diluted to the proper percentage. Do not dilute with distilled water additionally. Doing so may result in the possibility of freezing coolant and/or overheating.

NOTICE

SUZUKI LLC: Standard (Green) coolant;
- **The mixture you use should contain 50% concentration of antifreeze.**
- **If the lowest ambient temperature in your area is expected to be –35°C (–31°F) or below, use higher concentrations up to 60% following the instructions on the antifreeze container.**

(For Gasoline Engine Model)

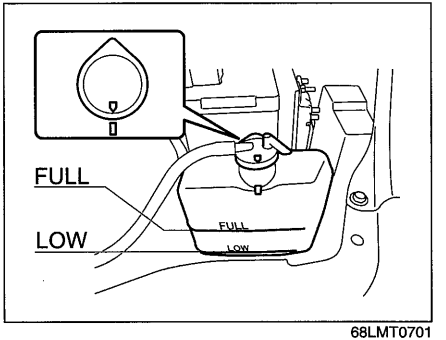

68LMT0701

If the coolant level is below the "LOW" mark, more coolant should be added. Remove the reservoir tank cap and add coolant until the reservoir tank level reaches the "FULL" mark. Never fill the reservoir tank above the "FULL" mark.

NOTICE

When putting the cap on the reservoir tank, line up the mark on the cap and the mark on the tank. Failure to follow this can result in coolant leakage.

(For Diesel Engine Model)

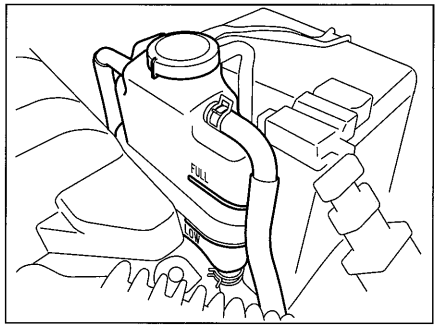

68LM721

⚠ WARNING

It is hazardous to remove the reservoir tank cap (degassing tank cap) for a diesel engine when the water temperature is high, because scalding fluid and steam may be blown out under pressure. Wait until the coolant temperature has lowered before removing the cap.

If the coolant level is below the "LOW" mark, more coolant should be added. When the engine is cool, remove the degassing tank cap by turning it anticlockwise slowly to release any pressure. And add coolant until the degassing tank level reaches the "FULL" mark. Never fill the degassing tank above the "FULL" mark.

Coolant Replacement

Since special procedures are required, we recommend you take your vehicle to your SUZUKI dealer for coolant replacement.

Air Cleaner

If the air cleaner is clogged with dust, there will be greater intake resistance, resulting in decreased power output and increased fuel consumption.

For Gasoline Engine Model (Except Sport model)

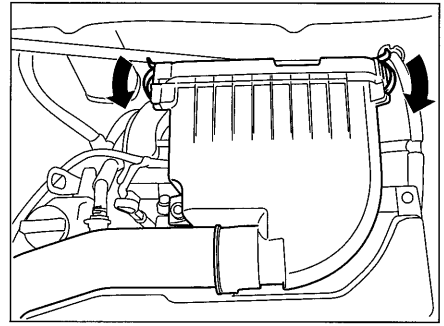

68LM726

For Diesel Engine Model

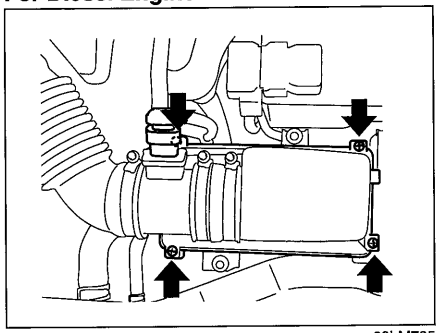

68LM725

Unclamp the side clamps or loosen the screws, and remove the element from the air cleaner case. If it appears to be dirty, replace it with a new one.

Clamp the side clamps or tighten the screws securely.

Sport model

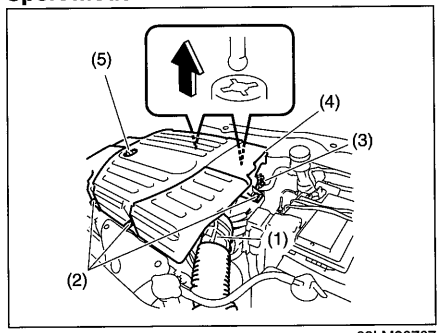

68LM20707

1) Remove the air cleaner inlet hose (1).
2) Remove the bolts (2), loosen the bolt (3) and lift the air cleaner case (4) directly above.

NOTICE
When lifting the air cleaner, make sure the air cleaner does not interfere the engine oil dipstick (5) to avoid damage the dipstick.

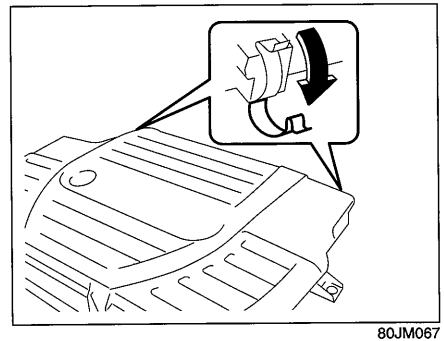

80JM067

3) Unclamp the side clamps, and remove the element from the air cleaner case. If it appears to be dirty, replace it with a new one.

Clamp the side clamps or tighten the bolts securely.

Spark Plugs

Replacing and inspection spark plugs

For Gasoline Engine Model (Except Sport model)

Since special procedures, materials and tools are required, it is recommended that you trust this job to your authorized SUZUKI dealer.

For Gasoline Engine Model (Sport model)

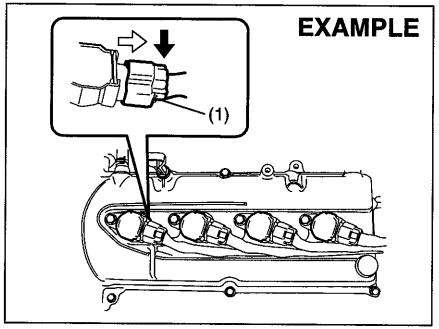

80JM125

To access the spark plug:

1) Remove the air cleaner case. Refer to "Air Cleaner" in this section.
2) If necessary, disconnect the coupler (1) while pushing the release lever.
3) Remove the bolts.
4) Pull the ignition coils out.

NOTE:
When installation, make sure the wires, couplers, sealing rubber of air cleaner assy and washers, are correctly returned in place.

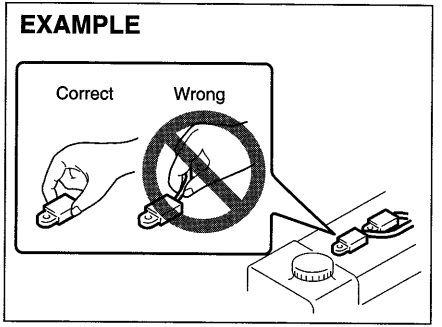

78K179

NOTICE

- **When pulling the ignition coils out, do not pull on the cable. Pulling on the cable can damage it.**
- **When servicing the iridium/platinum spark plugs (slender center electrode type plugs), do not touch the center electrode, as it is easy to damage.**

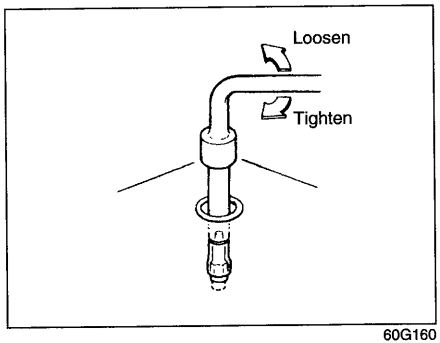

60G160

NOTICE

- **When installing the spark plugs, screw them in with your fingers to avoid stripping the threads. Tighten with a torque wrench to 25 Nm (2.5 kg-m, 18.0 lb-ft). Do not allow contaminants to enter the engine through the spark plug holes when the plugs are removed.**
- **Never use spark plugs with the wrong thread size.**

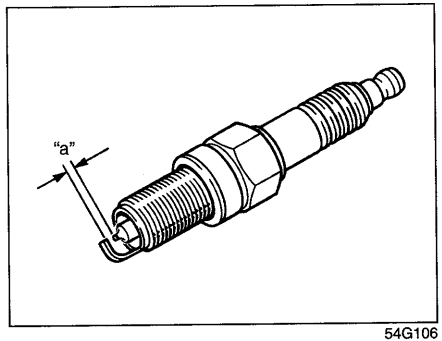

54G106

Spark plug gap "a"
SILFR6A11
1.0 – 1.1 mm (0.039 – 0.043 in.)

NOTICE

When replacing spark plugs, you should use the brand and type specified for your vehicle. For the specified plugs, refer to the "SPECIFICATIONS" section at the end of this book. If you wish to use a brand of spark plug other than the specified plugs, consult your SUZUKI dealer.

Gear Oil

Manual Transaxle Oil

When adding gear oil, use gear oil with the appropriate viscosity and grade as shown in the chart below.

We highly recommend you use:
"SUZUKI GEAR OIL 75W-80" for manual transaxle gear oil.

Manual transaxle oil (API GL-4)

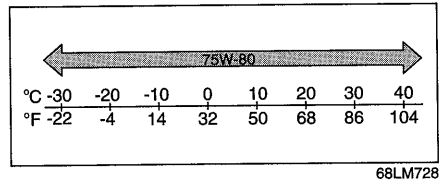

68LM728

We highly recommend you use:
"SUZUKI GEAR OIL 75W-85" for transfer gear oil and rear differential oil (4WD)

Transfer oil (4WD), Rear differential oil (4WD) (API GL-5 hypoid)

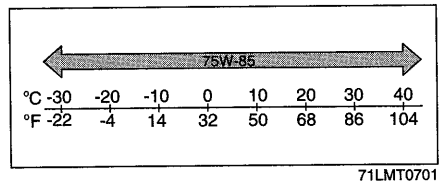

71LMT0701

Gear Oil Level Check

Manual transaxle

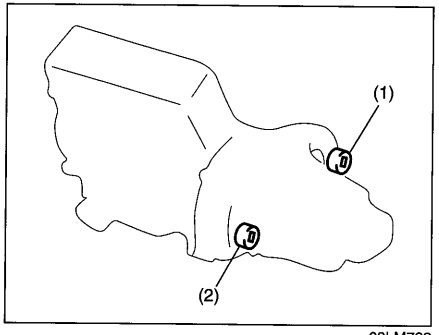

68LM723

(1) Oil filler and level plug
(for K12B engine 2WD model)
(2) Oil filler and level plug
(for K12B engine 4WD model/D13A engine model/M16A engine model)

Transfer (4WD)

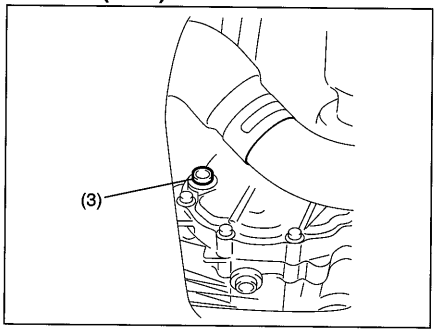

68LM70701

(3) Oil filler and level plug

Rear differential (4WD)

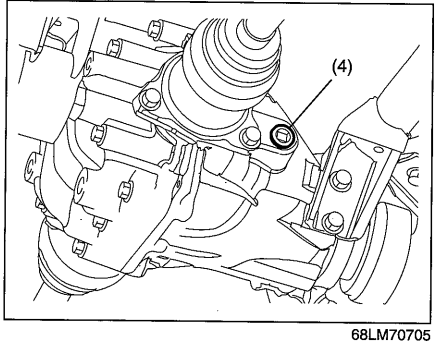

68LM70705

(4) Oil filler and level plug

To check the gear oil level, use the following procedure:

1) Park the vehicle on a level surface with the parking brake applied. Then, stop the engine.
2) Remove the oil filler and level plug (1), (2), (3) or (4).

For the manual transaxle;

3) If gear oil flow from the plug hole, the oil level is correct. Reinstall the plug. If gear oil do not flow from the plug hole, add oil through the filler plug hole until a little oil flow from the plug hole.

For the transfer and rear differential;

3) Check the inside of the hole with your finger. If the oil level comes up to the bottom of the plug hole, the oil level is correct. If so, reinstall the plug.
4) If the oil level is low, add gear oil through the oil filler and level plug hole (1), (2), (3) or (4) until the oil level reaches the bottom of the filler hole, then reinstall the plug.

K12B engine model/D13A engine model:

Tightening torque for oil filler and level plug (1), (2)
21 Nm (2.1 kg-m, 15.2 lb-ft)

M16A engine model:

Tightening torque for oil filler and level plug (2)
27 Nm (2.7 kg-m, 19.5 lb-ft)

Transfer/Rear differential:
Tightening torque for filler and level plug (3) or (4)
23 Nm (2.3 kg-m, 16.6 lb-ft)

⚠ CAUTION

After driving the vehicle, the gear oil temperature may be high enough to burn you. Wait until the oil filler and level plug is cool enough to touch with your bare hands before inspecting gear oil level.

NOTICE

When tightening the plug, apply the following sealing compound or equivalent to the plug threads to prevent oil leakage.

SUZUKI Bond No. "1216E" or "1217G"

Gear Oil Change

Since special procedures, materials and tools are required, it is recommended that you trust this job to your authorized SUZUKI dealer.

Clutch Pedal

Fluid Control Clutch

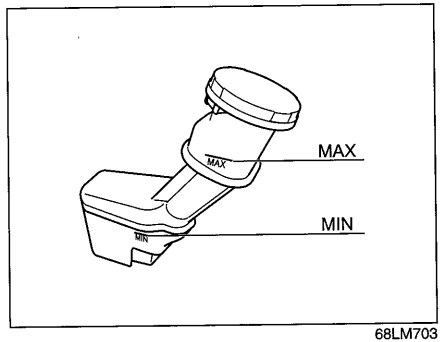

68LM703

Check the clutch pedal for smooth operation and clutch fluid level from time to time. If clutch dragging is felt with the pedal fully depressed, have the clutch inspected by your SUZUKI dealer. If the clutch fluid level is near the "MIN" line, fill it up to the "MAX" line with SAE J1704 or DOT4 brake fluid.

Automatic Transaxle (AT) Fluid

Specified Fluid

Use an automatic transaxle fluid SUZUKI ATF 3317 or Mobil ATF 3309.

Fluid Level Check

NOTICE

Driving with too much or too little fluid can damage the transaxle.

You must check the fluid level with the automatic transaxle fluid at normal operating temperature.

To check the fluid level:
1) To warm up the transaxle fluid, drive the vehicle or idle the engine until the temperature gauge indicates normal operating temperature.
2) Then drive for ten more minutes.

NOTICE

Be sure to use the specified automatic transaxle fluid. Using automatic transaxle fluid other than SUZUKI ATF 3317 or Mobil ATF 3309 may damage the automatic transaxle of your vehicle.

NOTE:
Do not check the fluid level if you have just driven the vehicle for a long time at high speed, if you have driven in city traffic in hot weather, or if the vehicle has been pulling a trailer. Wait until the fluid cools down (about 30 minutes), or the fluid level indication will not be correct.

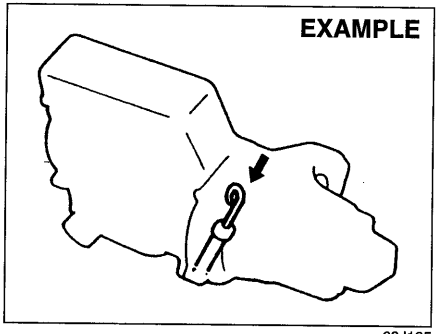

63J125

3) Park your vehicle on level ground.
4) Apply the parking brake and then start the engine in "P" (Park). Let it idle for two minutes and keep it running during the fluid level check.
5) With your foot on the brake pedal, move the gearshift lever through each range, pausing for about three seconds in each range. Then move it back to the "P" (Park) position.

⚠ WARNING

Be sure to depress the brake pedal when moving the gearshift lever, or the vehicle can move suddenly.

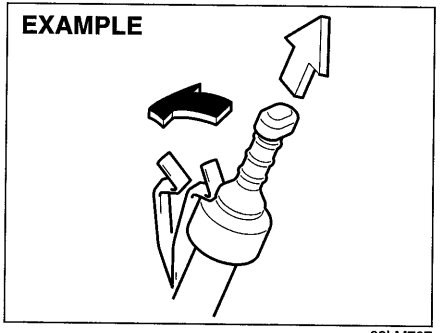

68LM707

6) The handle of the A/T fluid dipstick is colored orange for easy identification. Remove the dipstick, clean it and push it back in until the cap seats. Then pull out the dipstick.
7) Check both sides of the dipstick, and read the lowest level. The fluid level should be between the two marks in the "HOT" range on the dipstick.

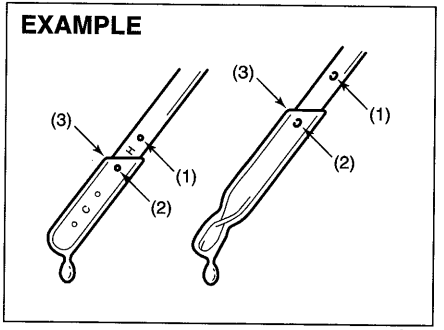

54G317

(1) FULL HOT
(2) LOW HOT
(3) The lowest point = Fluid level

8) Add just enough specified fluid through the dipstick hole to fill the transaxle to the proper level.

NOTICE

After checking or adding oil, be sure to insert the dipstick securely.

Changing Oil

Since special procedures, materials, and tools are required to change the automatic transaxle oil, it is recommended that you trust this job to your authorized SUZUKI dealer.

Fuel Filter (Diesel engine)

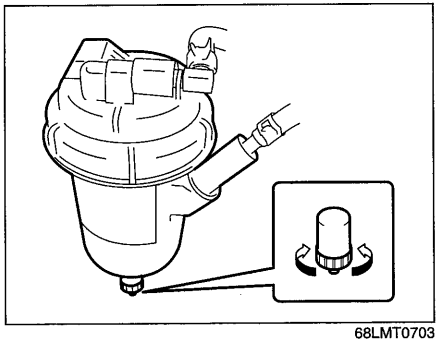

68LMT0703

The fuel filter works as a water sedimentor as well.

Drain water according to the Periodic Maintenance Schedule. To drain water:

1) Place a pan or ample rag under the fuel filter drain nozzle.
2) Loosen the drain knob. The water will be drained.
3) Tighten the drain knob when the water changes to the diesel fuel.
4) Tighten the drain knob.

Tightening torque for drain knob 1.5Nm (0.15kg-m, 1.1lb-ft)

Brakes

Brake Fluid

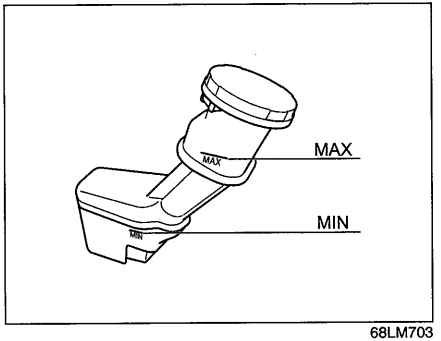

68LM703

Check the brake fluid level by looking at the reservoir in the engine compartment. Check that the fluid level is between the "MAX" and "MIN" lines. If the brake fluid level is near the "MIN" line, fill it up to the "MAX" line with SAE J1704 or DOT4 brake fluid.

⚠ WARNING

Failure to follow the guidelines below can result in personal injury or serious damage to the brake system.

- **If the brake fluid in the reservoir drops below a certain level, the brake warning light on the instrument panel will come on (the engine must be running with the parking brake fully disengaged). Should the light come on, immediately ask your SUZUKI dealer to inspect the brake system.**
- **A rapid fluid loss indicates a leak in the brake system which should be inspected by your SUZUKI dealer immediately.**
- **Do not use any fluid other than SAE J1704 or DOT4 brake fluid. Do not use reclaimed fluid or fluid that has been stored in old or open containers. It is essential that foreign particles and other liquids are kept out of the brake fluid reservoir.**

⚠ CAUTION

Brake fluid can harm your eyes and damage painted surfaces. Use caution when refilling the reservoir.

⚠ WARNING

Brake fluid is harmful or fatal if swallowed, and harmful if it comes in contact with skin or eyes. If swallowed, do not induce vomiting. Immediately contact a poison control center or a physician. If brake fluid gets in eyes, flush eyes with water and seek medical attention. Wash thoroughly after handling. Solution can be poisonous to animals. Keep out of the reach of children and animals.

NOTE:
With disc brakes, the fluid level can be expected to gradually fall as the brake pads wear.

Brake Pedal

Check if the brake pedal stops at the regular height without "spongy" feeling when you depress it. If not, have the brake system inspected by your SUZUKI dealer. If you doubt the brake pedal for the regular height, check it as follows:

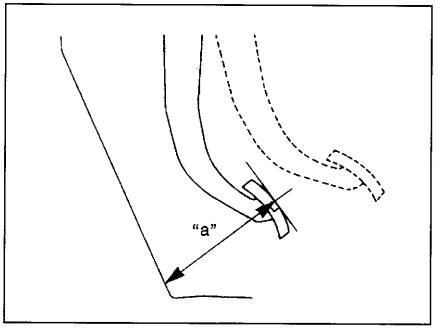

54G108

Pedal to floor carpet minimum distance "a": 68 mm (2.7 in.)

With the engine running, measure the distance between the brake pedal and floor carpet when the pedal is depressed with approximately 30 kg (66 lbs) of force. The minimum distance required is as specified. Since your vehicle's brake system is self-adjusting, there is no need for pedal adjustment.
If the pedal to floor carpet distance as measured above is less than the minimum distance required, have your vehicle inspected by your SUZUKI dealer.

NOTE:
When measuring the distance between the brake pedal and floor wall, be sure not to include the floor mat or rubber on the floor wall in your measurement.

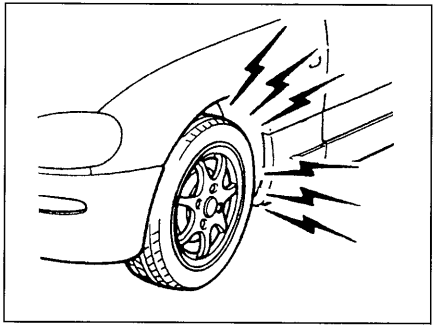

60G104S

⚠ WARNING

If you experience any of the following problems with your vehicle's brake system, have the vehicle inspected immediately by your SUZUKI dealer.
- **Poor braking performance**
- **Uneven braking (brakes not working uniformly on all wheels.)**
- **Excessive pedal travel**
- **Brake dragging**
- **Excessive noise**

Parking Brake

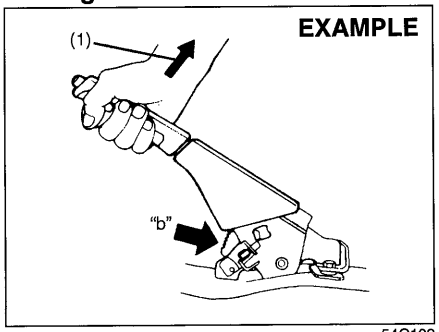

54G109

Ratchet tooth specification "b":
4th – 9th
Lever pull force (1):
200 N (20 kg, 44 lbs)

Check the parking brake for proper adjustment by counting the number of clicks made by the ratchet teeth as you slowly pull up on the parking brake lever to the point of full engagement. The parking brake lever should stop between the specified ratchet teeth and the rear wheels should be securely locked. If the parking brake is not properly adjusted or the brakes drag after the lever has been fully released, have the parking brake inspected and/or adjusted by your SUZUKI dealer.

Brake Discs and Brake Drums

Brake disc

Brake location	Minimum thickness
Front wheels	20.0 mm (0.8 in.)
Rear wheels	8.0 mm (0.3 in.)

Brake drum

Brake location	Maximum inner diameter
Rear wheels	202 mm (7.95 in.)

If the measured thickness or inner diameter of the most worn part exceeds the value indicated above, the parts should be replaced with a new one. The measurement involves disassembling each brake and requires the use of a micrometer or caliper, which must be done according to the instructions described in the relevant service manual or available from the relevant repair information site.

Steering

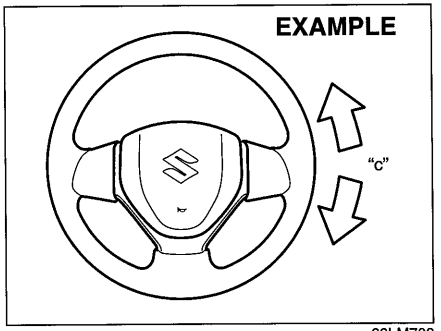

68LM708

Steering wheel play "c":
0 – 30 mm (0.0 – 1.2 in.)

Check the play of the steering wheel by gently turning it from left to right and measuring the distance that it moves before you feel slight resistance. The play should be between the specified values.

Check that the steering wheel turns easily and smoothly without rattling by turning it all the way to the right and to the left while driving very slowly in an open area. If the amount of free play is outside the specification or you find anything else to be wrong, an inspection must be performed by your SUZUKI dealer.

Tires

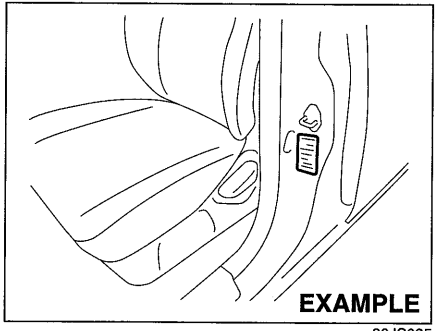

80JS025

The front and rear tire pressure specifications for your vehicle are listed on the Tire Information Label. Both the front and rear tires should have the specified tire pressure.
Note that the value does not apply to the compact spare tire, if equipped.

Tire Inspection

Inspect your vehicle's tires at least once a month by performing the following checks:

1) Measure the air pressure with a tire gauge. Adjust the pressure if necessary. Remember to check the spare tire, too.

⚠ WARNING

- **Air pressures should be checked when the tires are cold or you may get inaccurate readings.**
- **Check the inflation pressure from time to time while inflating the tire gradually, until the specified pressure is obtained.**
- **Never underinflate or overinflate the tires.**
  Underinflation can cause unusual handling characteristics or can cause the rim to slip on the tire bead, resulting in an accident or damage to the tire or rim.
  Overinflation can cause the tire to burst, resulting in personal injury. Overinflation can also cause unusual handling characteristics which may result in an accident.

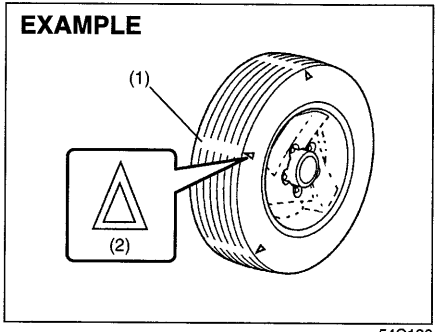

54G136

(1) Tread wear indicator
(2) Indicator location mark

2) Check that the depth of the tread groove is more than 1.6 mm (0.06 in.). To help you check this, the tires have molded-in tread wear indicators in the grooves. When the indicators appear on the tread surface, the remaining depth of the tread is 1.6 mm (0.06 in.) or less and the tire should be replaced.
3) Check for abnormal wear, cracks and damage. Any tires with cracks or other damage should be replaced. If any tires show abnormal wear, have them inspected by your SUZUKI dealer.

⚠ CAUTION

Hitting curbs and running over rocks can damage tires and affect wheel alignment. Be sure to have tires and wheel alignment checked periodically by your SUZUKI dealer.

4) Check for loose wheel bolts.
5) Check that there are no nails, stones or other objects sticking into the tires.

⚠ WARNING

- **Your SUZUKI is equipped with tires which are all the same type and size. This is important to ensure proper steering and handling of the vehicle. Never mix tires of different size or type on the four wheels of your vehicle. The size and type of tires used should be only those approved by SUZUKI as standard or optional equipment for your vehicle.**
- **Replacing the wheels and tires equipped on your vehicle with certain combinations of aftermarket wheels and tires can significantly change the steering and handling characteristics of your vehicle.**
- **Therefore, use only those wheel and tire combinations approved by SUZUKI as standard or optional equipment for your vehicle.**

NOTICE

Replacing the original tires with tires of a different size may result in false speedometer or odometer readings. Check with your SUZUKI dealer before purchasing replacement tires that differ in size from the original tires.

NOTICE

For 4-wheel drive (4WD) models, replacing a tire with one of a different size, or using different brands among the four tires can result in damage to the drive train.

Tire Rotation

4-tire rotation

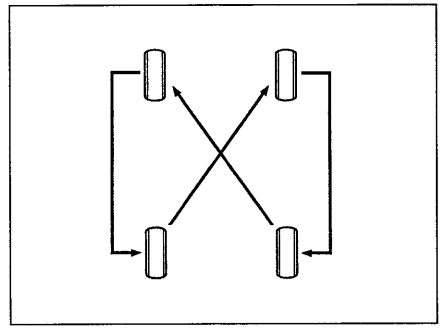

54G114

To avoid uneven wear of your tires and to prolong their life, rotate the tires as illustrated. Tires should be rotated every 10000 km (6000 miles). After rotation, adjust front and rear tire pressures to the specification listed on your vehicle's Tire Information Label.

Compact Spare Tire (if equipped)

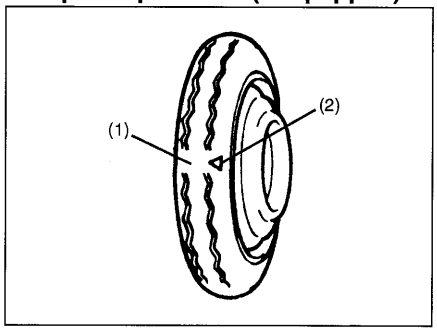

54G115

(1) Wear indicator
(2) Indicator location mark

Your vehicle comes equipped with the compact spare tire. The compact spare is designed to save space in your storage area, and its lighter weight makes it easier to install if a flat tire occurs. It is only intended for temporary emergency use, until the conventional tire can be repaired or replaced. The inflation pressure of the compact spare tire should be checked at least monthly. Use a quality pocket-type inflation pressure gauge and set at 420 kPa (60 psi). At the same time, check that the tire is stored securely. If it is not, tighten it.

Note that two or more compact spare tires should not be used on one vehicle simultaneously.

⚠ WARNING

The compact spare tire and wheel are intended for temporary emergency use only. Continuous use of this spare can result in tire failure and loss of control. Always observe these precautions when using this spare:

- **Your vehicle will handle differently with this temporary spare.**
- **Do not exceed 80 km/h (50 mph) speed.**
- **Replace this spare with a standard tire and wheel as soon as possible.**
- **Use of this spare will reduce ground clearance.**
- **Recommended air pressure for this spare is 420 kPa (60 psi).**
- **Do not use tire chains on the compact spare. If you must use tire chains, rearrange the wheels so standard tires and wheels are fitted to the front axle.**
- **The compact spare tire has a much shorter tread life than the conventional tires on your vehicle. Replace the tire as soon as the tread wear indicator appears.**
- **When replacing the compact spare tire, use a replacement tire with the exact same size and construction.**

Battery

⚠ WARNING

- **Batteries produce flammable hydrogen gas. Keep flames and sparks away from the battery or an explosion may occur. Never smoke when working in the vicinity of the battery.**
- **When checking or servicing the battery, disconnect the negative cable. Be careful not to cause a short circuit by allowing metal objects to contact the battery posts and the vehicle at the same time.**
- **To avoid harm to yourself or damage to your vehicle or battery, follow the jump starting instructions in the "EMERGENCY SERVICE" section of this manual if it is necessary to jump start your vehicle.**
- **Diluted sulfuric acid spilled from battery can cause blindness or severe burns. Use proper eye protection and gloves. Flush eyes or body with ample water and get medical care immediately if suffered. Keep batteries out of the reach of children.**

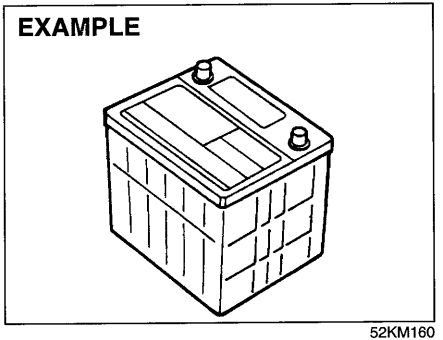

52KM160

Your vehicle is equipped with a battery that requires infrequent maintenance. You will never have to add water. You should, however, periodically check the battery, battery terminals and battery hold-down bracket for corrosion. Remove corrosion using a stiff brush and ammonia mixed with water, or baking soda mixed with water. After removing corrosion, rinse with clean water.

If your vehicle is not going to be driven for a month or longer, disconnect the cable from the negative terminal of the battery to help prevent discharge.

Replacement of the battery

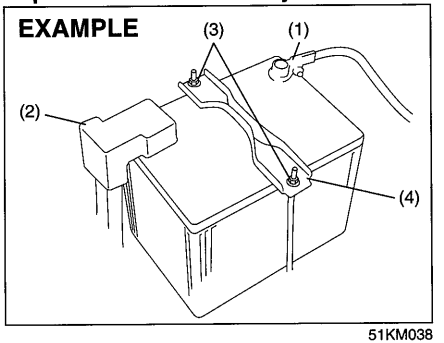

51KM038

To remove the battery:
1) Disconnect the negative cable (1).
2) Disconnect the positive cable (2).
3) Remove the retainer nuts (3) and remove the retainer (4).
4) Remove the battery.

To install the battery:
1) Install the battery in the reverse order of removal.
2) Tighten the retainer nuts and battery cables securely.

NOTE:
When the battery is disconnected, some of the vehicle's function will be initialized and/or deactivated.
These function are required to reset after the battery is reconnected.

⚠ WARNING

Batteries contain toxic substances including sulfuric acid and lead. They could have potential negative consequences for the environment and human health. Used battery must be disposed or recycled according to the local law and must not be discarded with ordinary household waste. Make sure not to tip over the battery when you remove it from the vehicle. Otherwise, sulfuric acid could run out and you might get injury.

(Battery label)

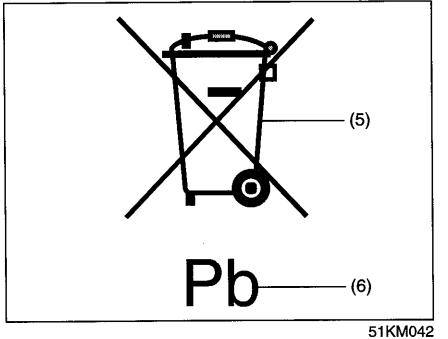

51KM042

(5) Crossed-out wheeled bin symbol
(6) Chemical symbol of "Pb"

The crossed-out wheeled bin symbol (5) located on the battery label indicates that used battery should be collected separately from ordinary household trash.
The chemical symbol of "Pb" (6) indicates the battery contains more than 0.004% lead.

By ensuring the used battery is disposed or recycled correctly, you will help prevent potential negative consequences for the environment and human health, which could otherwise be caused by inappropriate trash handling of the battery. The recycling of materials will help to conserve natural resources. For more detailed information about disposing or recycling of the used battery, consult your SUZUKI dealer.

Fuses

Your vehicle has three types of fuses, as described below:

Main fuse
The main fuse takes current directly from the battery.

Primary fuses
These fuses are between the main fuse and individual fuses, and are for electrical load groups.

Individual fuses
These fuses are for individual electrical circuits.

To remove a fuse, use the fuse puller provided in the fuse box.

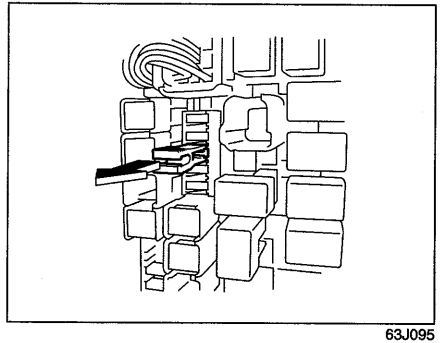

63J095

Fuses in the Engine Compartment

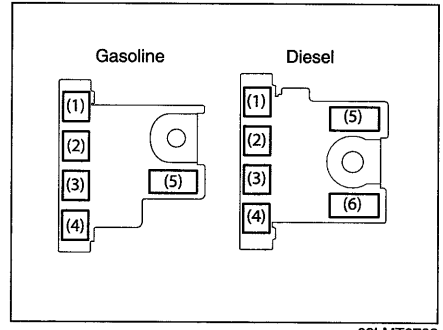

68LMT0702

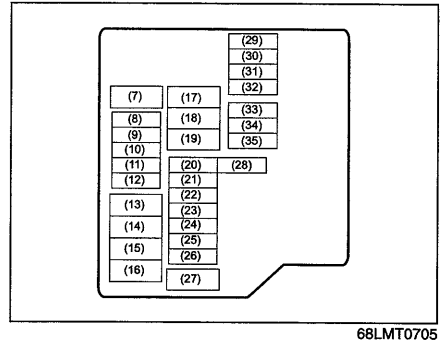

68LMT0705

MAIN FUSE / PRIMARY FUSE		
(1)	80 A	FL5
(2)	50 A	FL4
(3)	100 A	FL3
(4)	100 A	FL2
(5)	100 A	FL1 (GAS)
		FL6 (DIESEL)
(6)	120 A	FL1 (DIESEL)
(7)	50 A	Ignition switch -2
(8)	7.5 A	ECM (DIESEL)
(9)	15 A	Automatic transaxle relay
(10)	–	Blank
(11)	10 A	Air compressor
(12)	15 A	FI (GAS)
(13)	30 A	FI (DIESEL)
(14)	60 A	Power steering
(15)	30 A	Fuel heater (DIESEL)
	30 A	Radiator fan (GAS)
(16)	40 A	Radiator fan (DIESEL)
(17)	30 A	Blower fan
(18)	30 A	Starting motor
(19)	40 A	ESP® motor
(20)	30 A	Accessory
(21)	30 A	DCDC (ENG A-STOP)
(22)	25 A	Headlight
(23)	25 A	ESP® control module
(24)	30 A	Headlight washer
(25)	20 A	Front fog light
(26)	7.5 A	Headlight
(27)	40 A	Ignition switch
(28)	7.5 A	Starting Signal
(29)	15 A	Headlight (Left)
(30)	15 A	Headlight (Right)
(31)	15 A	Headlight (Left) (With AUTO light)
(32)	15 A	Headlight (Right) (With AUTO light)
(33)	25 A	INJ DRV (DIESEL)
(34)	15 A	FI (DIESEL)
(35)	15 A	F/P (DIESEL)

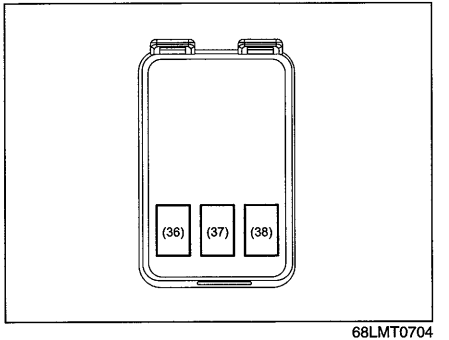

68LMT0704

MAIN FUSE / PRIMARY FUSE		
(36)	40 A	Sub heater
(37)	40 A	Sub heater 3
(38)	40 A	Sub heater 2

The main fuse, primary fuses and some of the individual fuses are located in the engine compartment. If the main fuse blows, no electrical component will function. If a primary fuse blows, no electrical component in the corresponding load group will function. When replacing the main fuse, a primary fuse or an individual fuse, use a genuine SUZUKI replacement.
To remove a fuse, use the fuse puller provided in the fuse box. The amperage of each fuse is shown in the back of the fuse box cover.

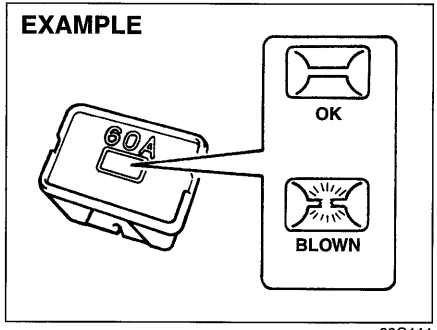

60G111

⚠ WARNING

If the main fuse or a primary fuse blows, be sure to have your vehicle inspected by an authorized SUZUKI dealer. Always use a genuine SUZUKI replacement. Never use a substitute such as a wire even for a temporary repair, or extensive electrical damage and a fire can result.

NOTE:
Make sure that the fuse box always carries spare fuses.

Fuses under the Dash Board

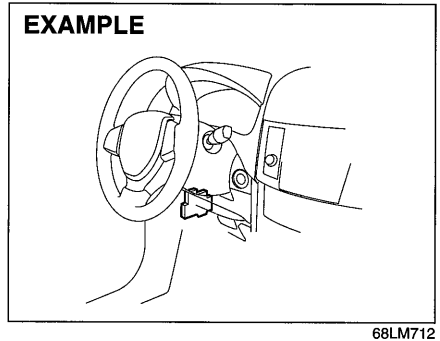

68LM712

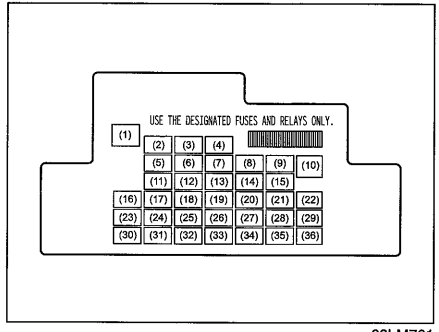

68LM701

PRIMARY FUSE		
(1)	30 A	–
(2)	20 A	–
(3)	20 A	STL
(4)	20 A	Rear defogger
(5)	20 A	Sunroof
(6)	15 A	DRL/Deicer
(7)	10 A	Heated mirror
(8)	7.5 A	Starting Signal
(9)	15 A	Accessory socket
(10)	30 A	Power window
(11)	10 A	Hazard
(12)	7.5 A	BCM
(13)	15 A	Ignition coil
(14)	10 A	ESP® control module
(15)	15 A	RADIO/BCM
(16)	10 A	ENG A-STOP control
(17)	15 A	Horn
(18)	10 A	Stop light
(19)	10 A	Air bag
(20)	10 A	Back-up light

(21)	15 A	Wiper / Washer
(22)	25 A	Front wiper
(23)	7.5 A	Dome light
(24)	–	Blank
(25)	7.5 A	RR fog lamp
(26)	–	Blank
(27)	7.5 A	Ignition-1 signal
(28)	15 A	Radio B (ENG A-STOP)
(29)	10 A	ACC (ENG A-STOP)
(30)	15 A	Radio
(31)	10 A	Tail lamp
(32)	20 A	D/L
(33)	7.5 A	Cruise control
(34)	10 A	Meter
(35)	7.5 A	Ignition-2 signal
(36)	20 A	Seat heater

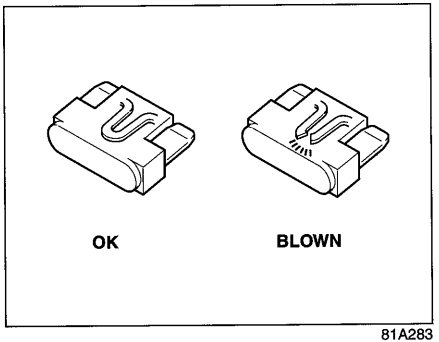

81A283

⚠ WARNING

Always be sure to replace a blown fuse with a fuse of the correct amperage. Never use a substitute such as aluminum foil or wire to replace a blown fuse. If you replace a fuse and the new one blows in a short period of time, you may have a major electrical problem. Have your vehicle inspected immediately by your SUZUKI dealer.

Headlight Aiming

Since special procedures are required, we recommend you take your vehicle to your SUZUKI dealer for headlight alignment.

Headlight Washer Fluid

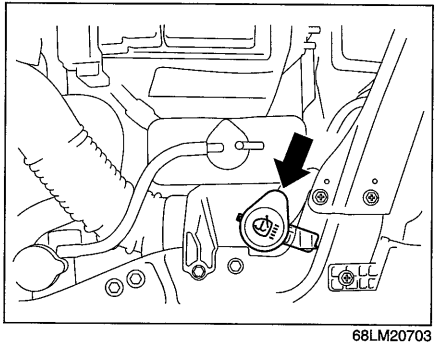

68LM20703

Check that there is washer fluid in the tank. Refill it if necessary.

NOTICE

- **In winter season, be sure to remove snow or ice on the nozzle holder at the front bumper before operating headlight washer.**
- **To avoid the frozen damage to the nozzle of the headlight washer, be sure to use the specific washer fluid.**

Bulb Replacement

⚠ CAUTION

- **Light bulbs can be hot enough to burn your finger right after being turned off. This is true especially for halogen headlight bulbs. Replace the bulbs after they become cool enough.**
- **The headlight bulbs are filled with pressurized halogen gas. They can burst and injure you if they are hit or dropped. Handle them carefully.**

NOTICE

The oils from your skin may cause a halogen bulb to overheat and burst when the lights are on. Grasp a new bulb with a clean cloth.

NOTICE

Frequent replacement of a bulb indicates the need for an inspection of the electrical system. This should be carried out by your SUZUKI dealer.

Center Interior Light

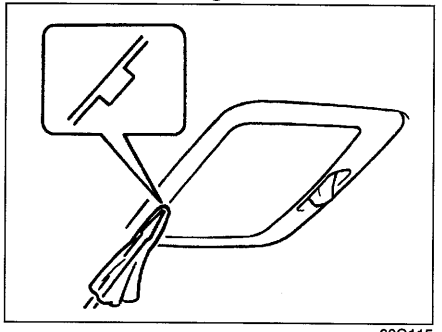

60G115

Pull down the lens by using a flat blade screwdriver covered with a soft cloth as shown. To install it, simply push it back in. The bulb can be removed by simply pulling it out. When replacing the bulb, make sure that the contact springs are holding the bulb securely.

Spot light (if equipped)

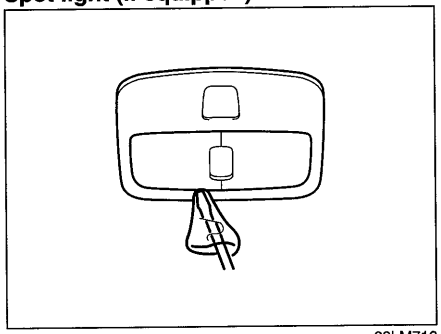

68LM716

Pull down the lens by using a flat blade screwdriver covered with a soft cloth as shown. To install it, simply push it back in.

Headlights

Discharge headlights

Since special procedures are required, we recommend you take your vehicle to your SUZUKI dealer for bulb replacement.

⚠ WARNING

Never attempt to replace the bulb of a discharge headlight, or you could suffer an electric shock from the high-voltage circuit in the headlight system. Always have a discharge headlight bulb replaced by an authorized SUZUKI dealer.

Halogen headlights

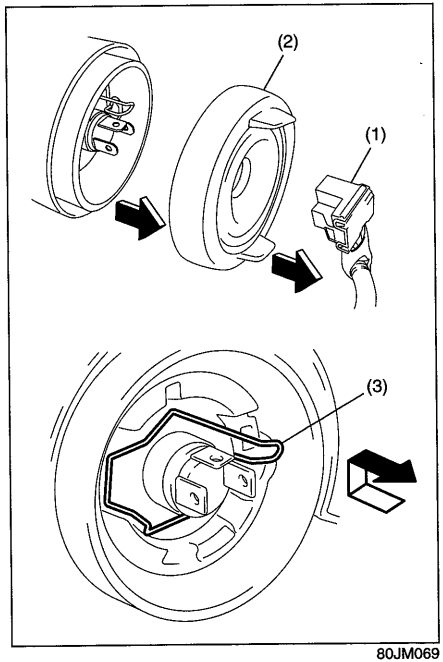

80JM069

Open the engine food. Disconnect the coupler (1). Remove the sealing rubber (2). Push the retaining spring (3) forward and unhook it. Then remove the bulb. Install a new bulb in the reverse order of removal.

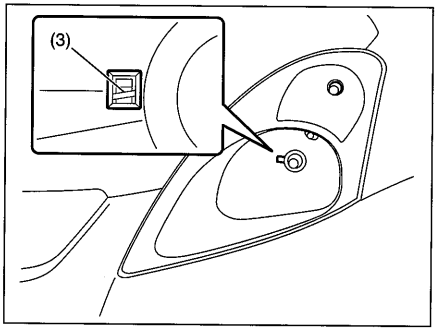

68LM713

NOTE:
You can see the position of retaining spring (3) from the hole of headlight.

Side Turn Signal Light (if equipped)

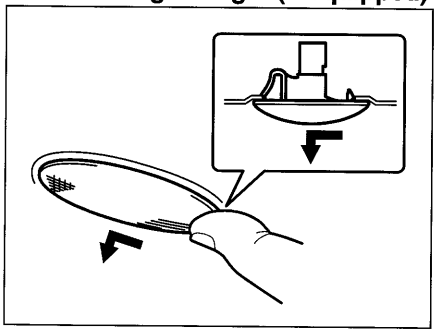

64J195

As the bulb is built-in type, the light assembly must be replaced. Remove the light assembly by sliding the light housing leftward with your finger.

Other General Lights

Bulb holder

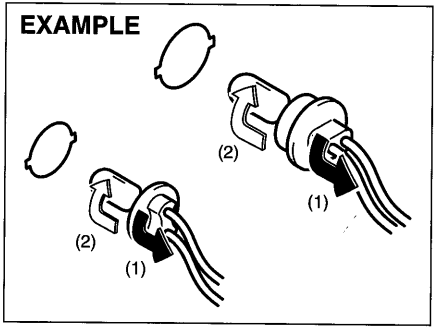

54G123

(1) Removal
(2) Installation

To remove a bulb holder from a light housing, turn the holder counterclockwise and pull it out. To install the holder, push the holder in and turn it clockwise.

Bulb

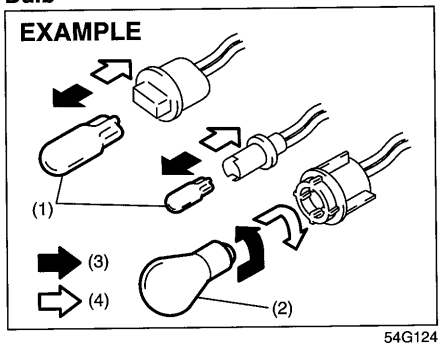

54G124

(3) Removal
(4) Installation

There are two types of bulb, "Full glass type" (1) and "Glass/metal type" (2).

To remove and install a full glass type bulb (1), simply pull out or push in the bulb.

To remove a glass metal type bulb (2) from a bulb holder, push in the bulb and turn it counterclockwise. To install a new bulb, push it in and turn it clockwise.

You can access the individual bulb or bulb holders as follows.

Front turn signal light (1)
Front position light (2)
(Vehicle with the halogen headlights)

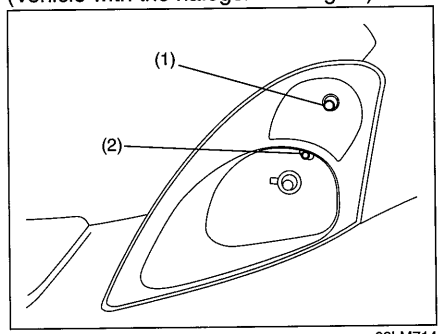

68LM714

(Vehicle with the discharge headlights)

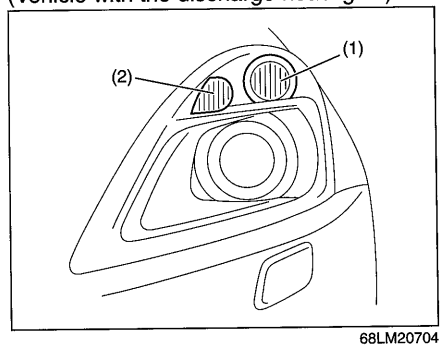

68LM20704

Front fog light (if equipped)

1) Start the engine. Turn the steering wheel to the opposite side of the replacing fog light to replace the bulb easily. Then turn off the engine.

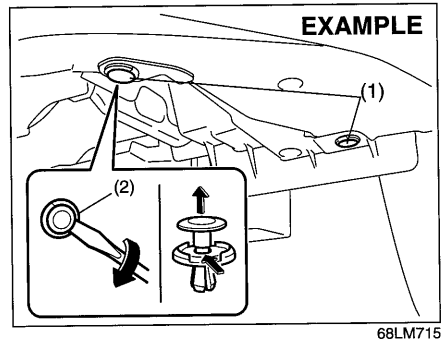

68LM715

2) Insert a flat blade screwdriver into the hole (2) and remove the clips (1) by twist the driver as shown in the illustration.

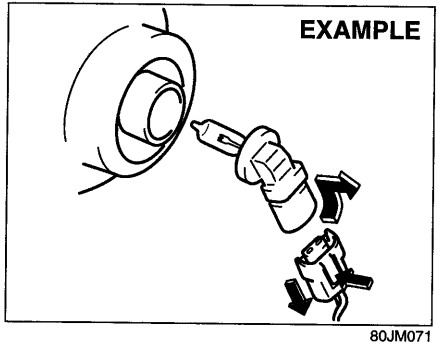

80JM071

3) Open the fender cover. Disconnect the coupler with pushing the lock release. Turn the bulb holder counterclockwise and remove it.

Rear combination light (tail, stop, turn signal, etc.)

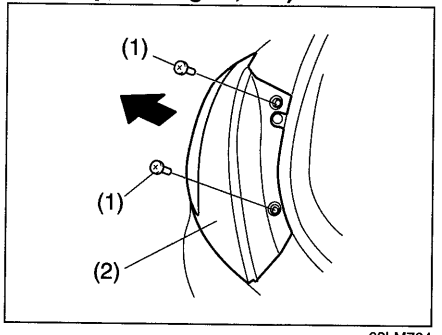

68LM704

Remove the screw (1). Remove the combination light (2) by pulling it outside.

License plate light

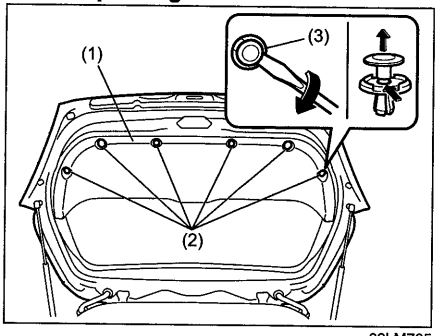

68LM705

To open the trim (1), insert a flat blade screwdriver into the hole (3) and remove the clips (2) by twist the driver as shown in the illustration.

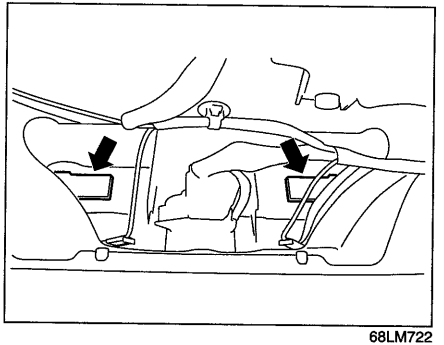

68LM722

Luggage compartment light

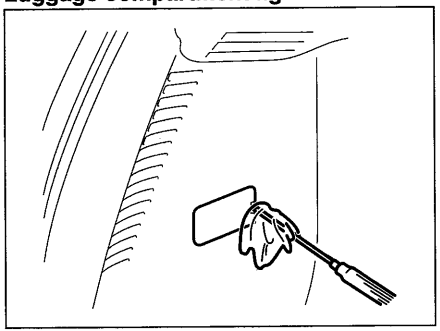

68LM717

Rear Fog Light

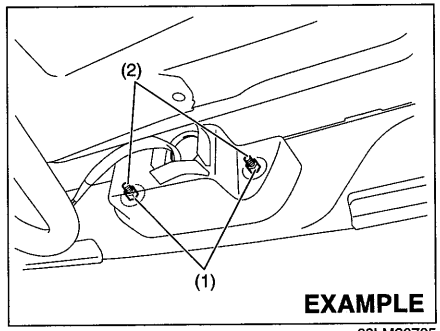

68LM20705

1) Remove the nuts (1) as shown in the illustration.
2) Remove the rear fog light by pushing the bolt (2).

Wiper Blades

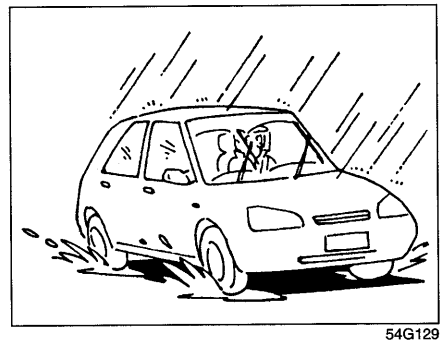

54G129

If the wiper blades become brittle or damaged, or make streaks when wiping, replace the wiper blades.

To install new wiper blades, follow the procedures below.

NOTICE
To avoid scratching or breaking the window, do not let the wiper arm strike the window while replacing the wiper blade.

NOTE:
Some wiper blades may be different from the ones described here depending on vehicle specifications. If so, consult your SUZUKI dealer for proper replacement method.

For windshield wipers:

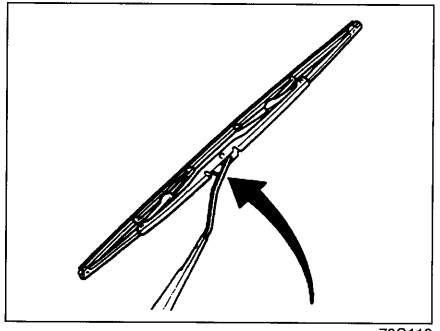

70G119

1) Hold the wiper arm away from the window.

NOTE:
When raising both of the front wiper arms, pull the driver's side wiper arm up first.
When returning the wiper arms, lower the passenger's side wiper arm first.
Otherwise, the wiper arms may interfere with each other.

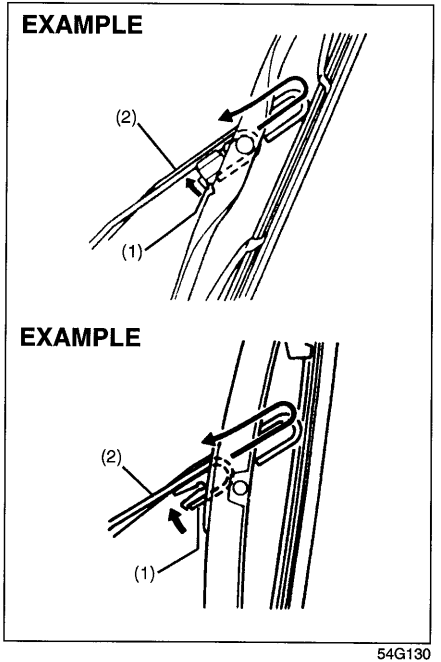

54G130

2) Squeeze lock (1) towards wiper arm (2) and remove the wiper frame from the arm as shown.
3) Unlock the lock end of the wiper blade and slide the blade out as shown.

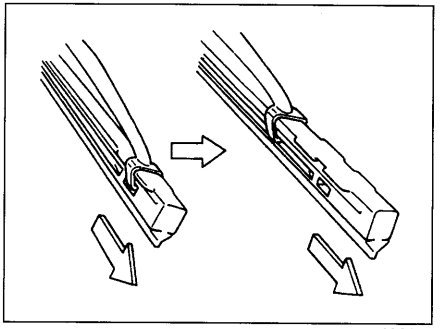

60A260

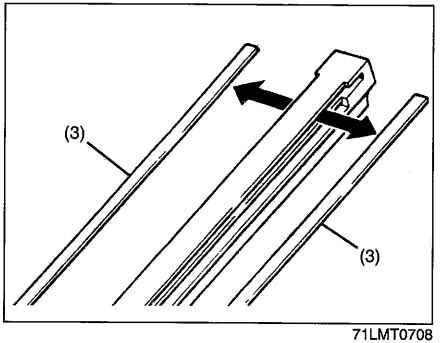

71LMT0708

(3) Retainer

4) If the new blade is provided without the two metal retainers (3), move them from the old blade to the new one.

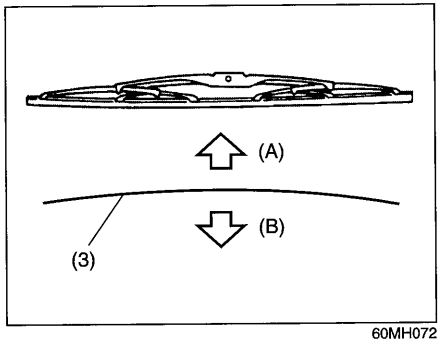

60MH072

(A) Up
(B) Down

NOTE:
When you install the metal retainers (3), make sure the direction of metal retainers as shown in the above illustrations.

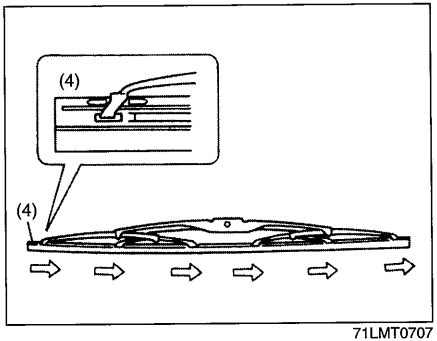

71LMT0707

(4) Locked end

5) Install the new blade in the reverse order of removal, with the locked end (4) positioned toward the wiper arm. Make sure the blade is properly retained by all the hooks. Lock the blade end into place.
6) Reinstall wiper frame to arm, making sure that the lock lever is snapped securely into the arm.

For rear wipers:

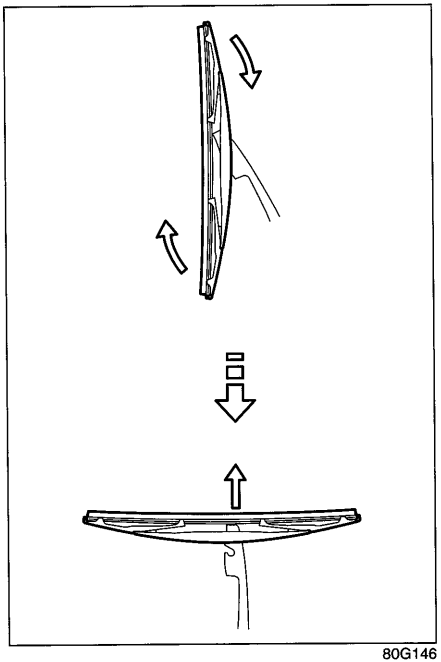

80G146

1) Hold the wiper arm away from the window.
2) Remove the wiper frame from the arm as shown.
3) Slide the blade out as shown.

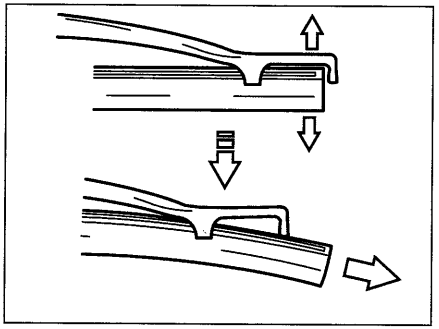

65D151

NOTE:
Do not flex the wiper blade frame end more than necessary. If you do, it can break off.

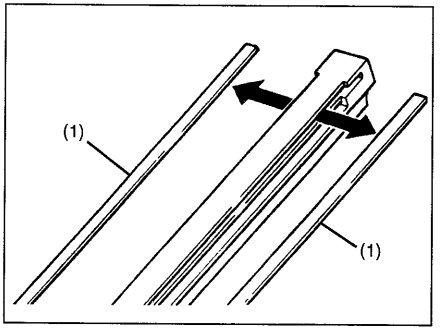

54G135

(1) Retainer

4) If the new blade is provided without the two metal retainers, move them from the old blade to the new one.
5) Install the new blade in the reverse order of removal.
   Make sure the blade is properly retained by all the hooks.
6) Reinstall wiper frame to arm in the reverse order of removal.

Windshield Washer Fluid

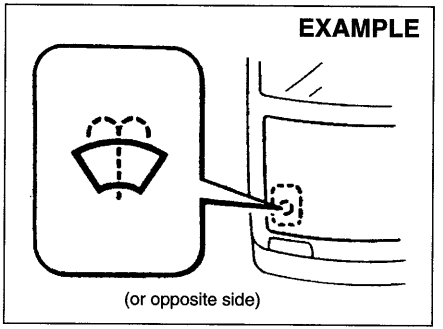

80JM078

Check that there is washer fluid in the tank. Refill it if necessary. Use a good quality windshield washer fluid, diluted with water as necessary.

⚠ WARNING

Do not use "anti-freeze" solution in the windshield washer reservoir. This can severely impair visibility when sprayed on the windshield, and also damage your vehicle's paint.

NOTICE

Damage may result if the washer motor is operated with no fluid in the washer tank.

Air Conditioning System

If you do not use the air conditioner for a long period, such as during winter, it may not give the best performance when you start using it again. To help maintain optimum performance and durability of your air conditioner, it needs to be run periodically. Operate the air conditioner at least once a month for one minute with the engine idling. This circulates the refrigerant and oil and helps protect the internal components.

MEMO

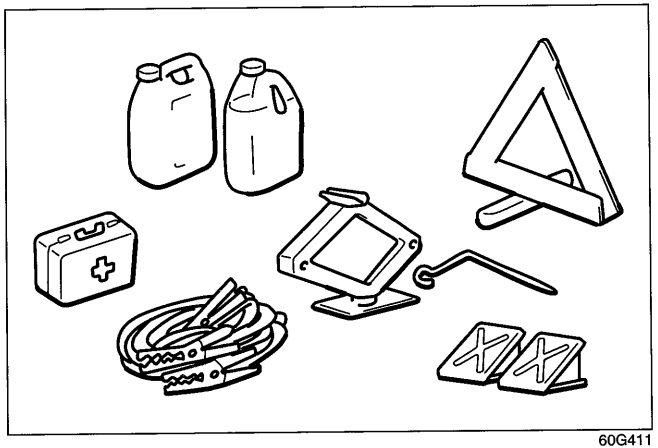

60G411

EMERGENCY SERVICE

Tire Changing Tool 8-1
Jacking Instructions 8-2
Flat Tire Repair Kit (if equipped) 8-6
Jump Starting Instructions 8-9
Towing 8-10
If the Starter Does Not Operate 8-11
If the Engine is Flooded 8-11
If the Engine Overheats 8-12

Tire Changing Tool

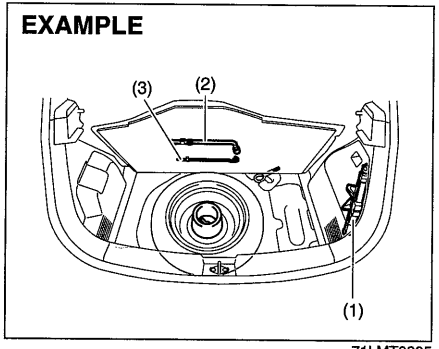

71LMT0805

The jack (1), wheel brace (2), and jack handle (3) are stowed in the luggage compartment.

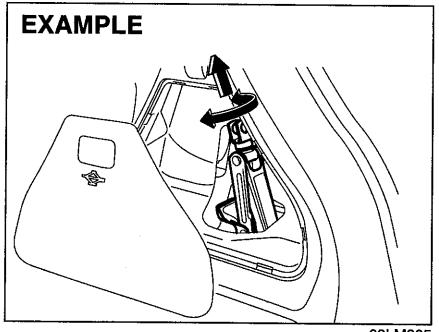

68LM805

To remove the jack, turn its shaft counterclockwise and pull the jack out of the storage bracket.

To stow the jack, place it in the storage bracket and turn the shaft clockwise until the jack is securely held in place.

⚠ WARNING

After using the tire changing tools, be sure to stow them securely or they can cause injury if an accident occurs.

⚠ CAUTION

The jack should be used only to change wheels. It is important to read the jacking instructions in this section before attempting to use the jack.

Jacking Instructions

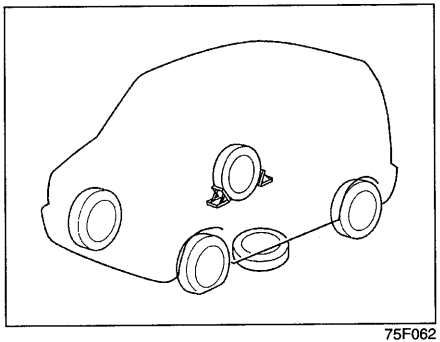

75F062

1) Place the vehicle on level, hard ground.
2) Set the parking brake firmly and shift into "P" (Park) if your vehicle has an automatic transaxle, or shift into "R" (Reverse) if your vehicle has a manual transaxle.

⚠ WARNING

- **Be sure to shift into "P" (Park) for an automatic transaxle vehicle, or into "R" (Reverse) for a manual transaxle vehicle when you jack up the vehicle.**
- **Never jack up the vehicle with the transaxle in "N" (Neutral). Otherwise, unstable jack may cause an accident.**

3) Turn on the hazard warning flasher if your vehicle is near traffic.
4) Block the front and rear of the wheel diagonally opposite of the wheel being lifted.
5) Place the spare wheel near the wheel being lifted as shown in the illustration in case that the jack slips.

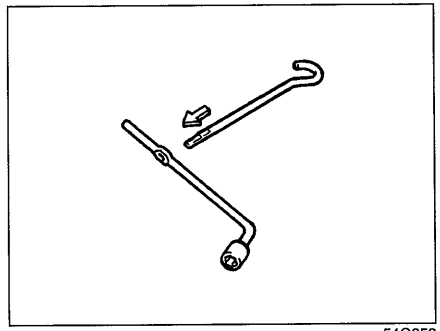

54G253

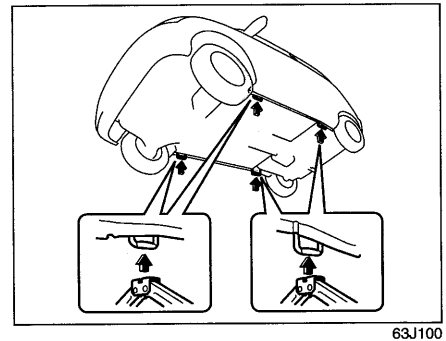

63J100

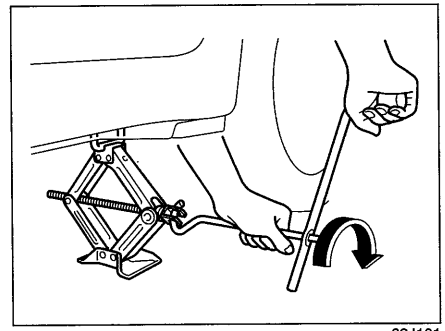

63J101

6) Position the jack at an angle as shown in the illustration and raise the jack by turning the jack handle clockwise until the jack-head groove fits around the jacking bar beneath the vehicle body.

7) Continue to raise the jack slowly and smoothly until the tire clears the ground. Do not raise the vehicle more than necessary.

⚠ WARNING

- **Use the jack only to change wheels on level, hard ground.**
- **Never jack up the vehicle on an inclined surface.**
- **Never raise the vehicle with the jack in a location other than the specified jacking point (shown in the illustration) near the wheel to be changed.**
- **Make sure that the jack is raised at least 51 mm (2 inches) before it contacts the flange. Use of the jack when it is within 51 mm (2 inches) of being fully collapsed may result in failure of the jack.**
- **Never get under the vehicle when it is supported by the jack.**
- **Never run the engine when the vehicle is supported by the jack and never allow passengers to remain in the vehicle.**

To Raise the Vehicle with a Garage Jack

- Apply the garage jack to one of the points indicated below.
- Always support the raised vehicle with jack stands (commercially available) at the points indicated below.

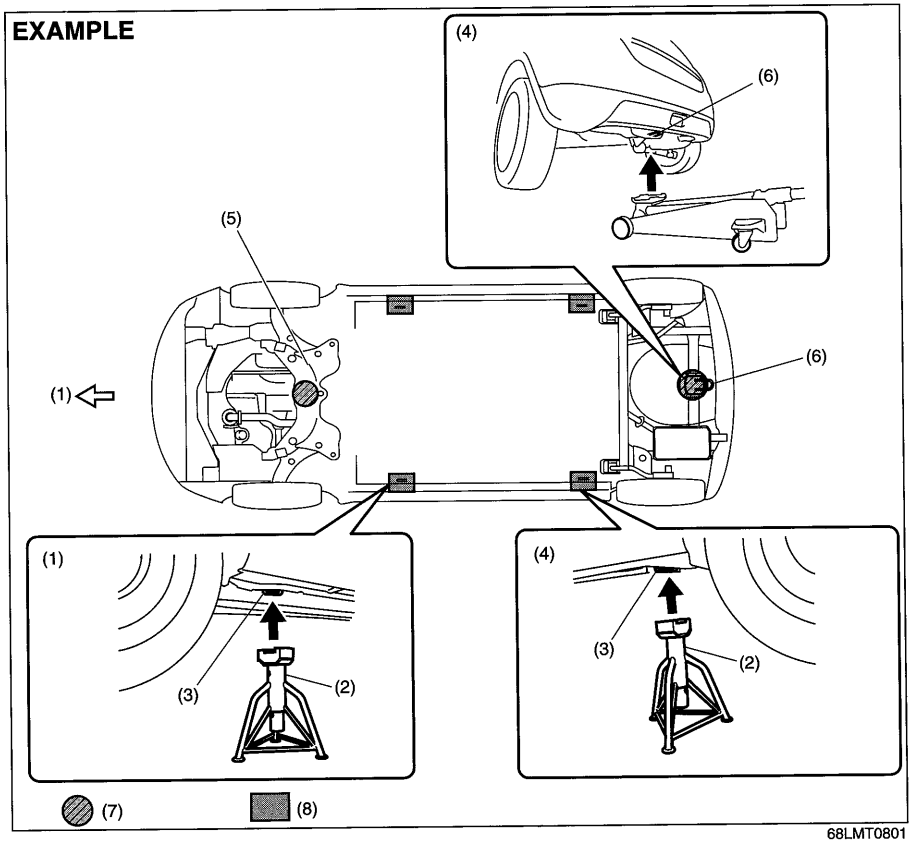

68LMT0801

(1) Front
(2) Jack stand
(3) Jacking point for onboard jack
(4) Rear
(5) Front suspension frame
(6) Frame hook
(7) Jacking point for garage jack
(8) Application point for two-column lift and jack stand

NOTICE
Never apply a garage jack to the exhaust pipe, side under spoiler (if equipped), engine undercover or rear torsion beam.

NOTE:
For more details, please contact an authorized SUZUKI dealer.

Changing Wheels

To change a wheel, use the following procedure:

1) Remove the jack, tools and spare wheel from the vehicle.
2) Loosen, but do not remove the wheel bolts.
3) Jack up the vehicle (follow the jacking instructions in this section).

⚠ WARNING

- **Be sure to shift into "P" (Park) in automatic transaxle, or shift into "R" (Reverse) in manual transaxle when you jack up the vehicle.**
- **Never jack up the vehicle with the transaxle in "N" (Neutral). Otherwise, unstable jack may cause an accident.**

4) Remove the wheel bolts and wheel.
5) Before installing the new wheel, clean any mud or dirt off from the surface of the wheel and hub with a clean cloth. Clean the hub carefully; it may be hot from driving.
6) Install the new wheel and replace the wheel bolts with their cone shaped end facing the wheel. Tighten each bolt snugly by hand until the wheel is securely seated on the hub.

Except Sport model

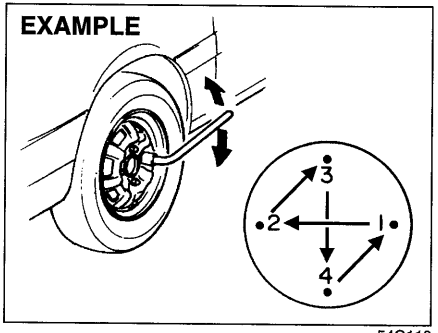

54G116

Sport model

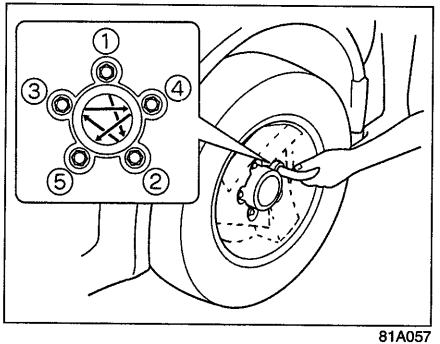

81A057

Tightening torque for wheel bolt
85 Nm (8.5 kg-m, 61.5 lb-ft)

7) Lower the jack and fully tighten the bolts in a crisscross fashion with a wrench as shown in the illustration.

⚠ WARNING

Use genuine wheel bolts and tighten them to the specified torque as soon as possible after changing wheels. Incorrect wheel bolts or improperly tightened wheel bolts may come loose or fall off, which can result in an accident. If you do not have a torque wrench, have the wheel bolt torque checked by an authorized SUZUKI dealer.

Full Wheel Cover (if equipped)

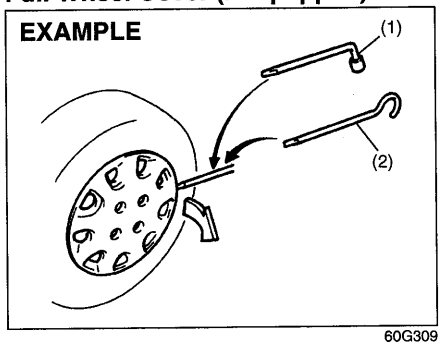

60G309

(1) or (2) Flat end tool

Your vehicle includes two tools, a wheel brace and a jack crank, one of which has a flat end.
Use the tool with the flat end to remove the full wheel cap, as shown above.

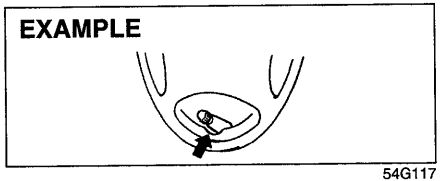

54G117

When installing the cover, make sure that it is positioned so that it does not cover or foul the air valve.

Flat Tire Repair Kit (if equipped)

The flat tire repair kit is stowed in the 1st luggage under-box immediately under the trunk floorboard.

Take a moment to read the attached instruction manual.

IMPORTANT
The Flat Tire Repair Kit cannot be used in the following cases. Consult a SUZUKI Dealer or a Roadside Assistance Service.

- **Cuts or piercing in the tire tread larger than approx. 4 mm.**
- **Cuts in the tire side wall.**
- **Tire damage caused by driving with considerably reduced tire pressure or even with deflated tire.**
- **The tire bead completely unseated outside of the rim.**
- **The rim damaged.**

Small punctures in the tire tread, caused by a nail or a screw, can be sealed with the Flat Tire Repair Kit.
Do not remove nails or screws from the tire during an emergency repair.

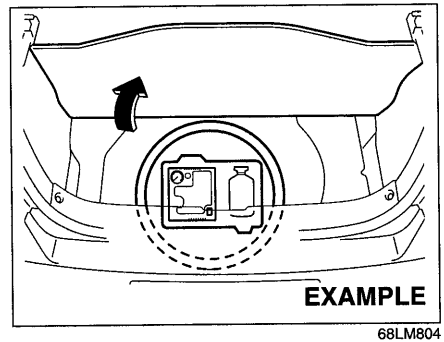

68LM804

Flat tire repair kit contents

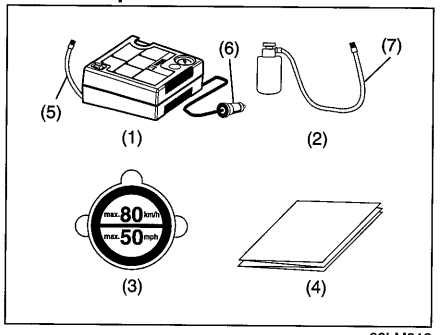

68LM812

(1) Air compressor
(2) Sealant bottle
(3) Speed restriction sticker (with sealant bottle)
(4) Instruction manual
(5) Air hose
(6) Power plug
(7) Filler hose

⚠ WARNING

Flat tire repair kit sealant is harmful if swallowed, or it comes in contact with skin or eyes. If swallowed, do not induce vomiting. Give plenty of water (if possible charcoal slurry) and seek medical attention immediately. If sealant gets in eyes, flush eyes with water and seek medical attention. Wash thoroughly after handling. Solution can be poisonous to animals. Keep out of the reach of children and animals.

NOTICE

Be sure to replace the sealant before expiry date indicated on the label of the sealant bottle. To purchase new sealant, see your SUZUKI dealer.

How to Perform an Emergency Repair

1) Place the vehicle on level, hard ground. Set the parking brake firmly and shift into "P" (Park) if your vehicle has a automatic transaxle, or shift into "R" (Reverse) if your vehicle has a manual transaxle.
   Turn on the hazard warning flasher if your vehicle is near traffic.
   Block the front and rear of the wheel diagonally opposite of the wheel being repaired.
2) Take out the sealant bottle and the compressor.
3) At the top of the compressor, open the lid that covers the socket for the sealant bottle, then fit the bottle into the socket.
4) Unscrew the valve cap from the tire valve.
5) Connect the filler hose of the sealant bottle to the tire valve.
6) Connect the power plug of the compressor to the accessory socket. Start the engine. Switch on the compressor. Inflate the tire to the required air pressure.

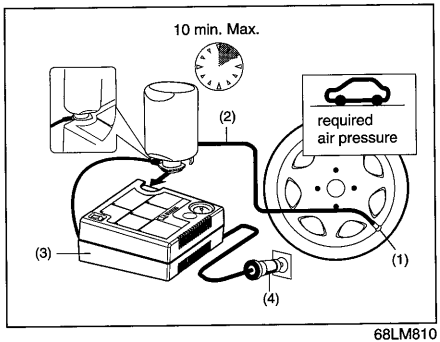

68LM810

(1) Tire valve
(2) Filler hose
(3) Compressor
(4) Power plug

NOTICE

Do not operate the compressor for longer than 10 minutes. It can cause overheating of the compressor.

If the required air pressure cannot be reached within 5 minutes, move the vehicle a few meters ahead and back to spread the sealant over the entire tire. Then, inflate the tire again.

If the required air pressure still cannot be reached, the tire may be severely damaged. In this case, the Flat Tire Repair Kit cannot provide the necessary seal. Consult a SUZUKI Dealer or a Roadside Assistance Service.

NOTE:
If over inflated, deflate air by loosening the screw of the filler hose.

7) Affix the speed restriction label from the bottom of the sealant bottle in the driver's field of view.
8) Make a short drive immediately after inflating to the required air pressure. Drive carefully with a maximum speed of 80 km/h (50 mph).
9) Carry on driving carefully to the nearest SUZUKI Dealer or a tire repair shop.

⚠ WARNING

Do not affix the speed restriction label to the air bag. Also do not affix it to the warning light indicator or to the speedometer.

10) After 10 km (6 mile) running, check the tire pressure with the pressure gauge of the compressor. If the air pressure is indicated more than 250 kPa (2.5 bar), the emergency repair is completed. But, if the air pressure is indicated less than the required air pressure, correct the tire pressure to the required air pressure. If the tire pressure has dropped below 130 kPa (1.3 bar), the Flat Tire Repair Kit cannot provide the necessary seal. Do not drive on and consult a SUZUKI Dealer or a Roadside Assistance Service.

⚠ WARNING

Be sure to check the tire pressure and confirm the completion of the emergency repair after 10 km (6 mile) of running.

NOTICE

Have the tire renewed at the nearest SUZUKI Dealer. When repair to reuse the sealed tire, consult a tire repair shop.
The wheel can be reused after wiping sealant off completely with cloth in order not to rust, but the tire valve must be renewed.
Dispose of the sealant bottle at a SUZUKI dealer or in accordance with your regional codes and practices.
After using the sealant bottle, replace it with a new bottle from your SUZUKI dealer.

How to Use the Kit's Compressor to Inflate a Tire

1) Place the vehicle on level, hard ground. Set the parking brake firmly and shift into "P" (Park) if your vehicle has a automatic transaxle, or shift into "R" (Reverse) if your vehicle has a manual transaxle.
2) Take out the compressor.
3) Unscrew the valve cap from the tire valve.
4) Connect the air hose of the compressor to the tire valve.
5) Connect the power plug of the compressor to the accessory socket. Start the engine. Switch on the compressor. Inflate the tire to the required air pressure.

NOTICE

Do not operate the compressor for longer than 10 minutes. It can cause overheating of the compressor.

Jump Starting Instructions

⚠ WARNING

- **Never attempt to jump start your vehicle if the battery appears to be frozen. Batteries in this condition may explode or rupture if jump starting is attempted.**
- **When making jump lead connections, be certain that your hands and the jump leads remain clear from pulleys, belts, or fans.**
- **Batteries produce flammable hydrogen gas. Keep flames and sparks away from the battery or an explosion may occur. Never smoke when working in the vicinity of the battery.**
- **If the booster battery you use for jump starting is installed in another vehicle, make sure the two vehicles are not touching each other.**
- **If your battery discharges repeatedly, for no apparent reason, have your vehicle inspected by an authorized SUZUKI dealer.**
- **To avoid harm to yourself or damage to your vehicle or battery, follow the jump starting instructions below precisely and in order.**
  If you are in doubt, call for qualified road service.

NOTICE

Your vehicle should not be started by pushing or towing. This starting method could result in permanent damage to the catalytic converter. Use jump leads to start a vehicle with a weak or flat battery.

When Jump Starting Your Vehicle, Use the Following Procedure:

1) Use only a 12-volt battery to jump start your vehicle. Position the good 12-volt battery close to your vehicle so that the jump leads will reach both batteries. When using a battery installed on another vehicle, DO NOT LET THE VEHICLES TOUCH. Set the parking brakes fully on both vehicles.
2) Turn off all vehicle accessories, except those necessary for safety reasons (for example, headlights or hazard lights).

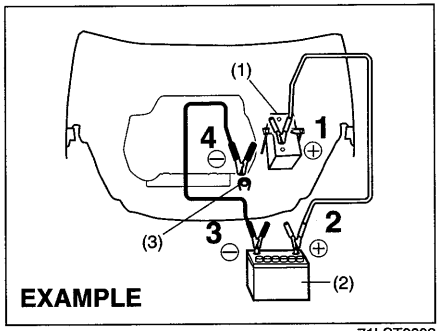

71LST0802

3) Make jump lead connections as follows:
   1. Connect one end of the first jump lead to the positive (+) terminal of the flat battery (1).
   2. Connect the other end to the positive (+) terminal of the booster battery (2).
   3. Connect one end of the second jump lead to the negative (–) terminal of the booster battery (2).
   4. Make the final connection to an unpainted, heavy metal part (i.e. engine hook (3)) of the engine of the vehicle with the flat battery (1).

⚠ WARNING

Never connect the jump lead directly to the negative (–) terminal of the discharged battery, or an explosion may occur.

4) If the booster battery you are using is fitted to another vehicle, start the engine of the vehicle with the booster battery. Run the engine at moderate speed.
5) Start the engine of the vehicle with the flat battery.
6) Remove the jump leads in the exact reverse order in which you connected them.

Towing

If you need to have your vehicle towed, contact a professional service. Your dealer can provide you with detailed towing instructions.

NOTICE

To help avoid damage to your vehicle during towing, proper equipment and towing procedures must be used.

2-Wheel Drive (2WD) Automatic Transaxle

Automatic transaxle vehicles may be towed using either of the following methods.

1) From the front, with the front wheels lifted and the rear wheels on the ground. Before towing, make sure that the parking brake is released.
2) From the rear, with the rear wheels lifted and a dolly under the front wheels.

NOTICE

Towing your vehicle with the front wheels on the ground can result in damage to the automatic transaxle.

2-Wheel Drive (2WD) Manual Transaxle

Manual transaxle vehicles may be towed using either of the following methods.

1) From the front, with the front wheels lifted and the rear wheels on the ground. Before towing, make sure that the parking brake is released.
2) From the rear, with the rear wheels lifted and the front wheels on the ground, provided the steering and drivetrain are in operational condition. Before towing, make sure that transaxle is in neutral, the steering wheel is unlocked (vehicle without keyless push start system - the ignition key should be in the "ACC" position) (vehicle with keyless push start system - the ignition mode is "ACC"), and the steering wheel is secured with a clamping device designed for towing service.

NOTICE

The steering column is not strong enough to withstand shocks transmitted from the front wheels during towing. Always unlock the steering wheel before towing.

4-wheel drive (4WD)

Your vehicle should be towed under one of the following conditions:

1) With all four wheels on a flat-bed truck.
2) With the front or rear wheels lifted and a dolly under the other wheels.

⚠ CAUTION

Towing your vehicle with front and/or rear wheels on the ground can result in damage to the 4-wheel drive (4WD) system.

If the Starter Does Not Operate

1) Try turning the ignition switch to the "START" position or try pressing the engine switch to change the ignition mode to "START" with the headlights turned on to determine the battery condition. If the headlights go excessively dim or go off, it usually means that either the battery is flat or the battery terminal contact is poor. Recharge the battery or correct battery terminal contact as necessary.
2) If the headlights remain bright, check the fuses. If the reason for failure of the starter is not obvious, there may be a major electrical problem. Have the vehicle inspected by your authorized SUZUKI dealer.

If the Engine is Flooded

(Vehicle without Keyless Push Start System)

If the engine is flooded with gasoline, it may be hard to start. If this happens, press the accelerator pedal all the way to the floor and hold it there while cranking the engine. (Do not operate the starter motor for more than 15 seconds).

(Vehicle with Keyless Push Start System)

If the engine is flooded with gasoline, it may be hard to start. If this happens, press the accelerator pedal all the way to the floor and hold it there while cranking the engine. (Do not operate the starter motor for more than 12 seconds).

NOTE:
If the engine refuses to start, the starter motor automatically stops after a certain period of time. After the starter motor has automatically stopped or there is anything abnormal in the engine starting system, the starter motor runs only while the engine switch is held pressed.

If the Engine Overheats

The engine could overheat temporarily under severe driving conditions. If the engine coolant temperature gauge indicates overheating during driving:

1) Turn off the air conditioner, if equipped.
2) Take the vehicle to a safe place and park.
3) Let the engine run at the normal idle speed for a few minutes until the indicator is within the normal, acceptable temperature range between "H" and "C".

⚠ WARNING

If you see or hear escaping steam, stop the vehicle in a safe place and immediately turn off the engine to let it cool. Do not open the hood when steam is present. When the steam can no longer be seen or heard, open the hood to see if the coolant is still boiling. If it is, you must wait until it stops boiling before you proceed.

If the temperature indication does not come down to within the normal, acceptable range:

1) Turn off the engine and check that the water pump belt and pulleys are not damaged or slipping. If any abnormality is found, correct it.
2) Check the coolant level in the reservoir. If it is found to be lower than the "LOW" line, look for leaks at the radiator, water pump, and radiator and heater hoses. If you locate any leaks that may have caused the overheating, do not run the engine until these problems have been corrected.
3) If you do not find a leak, carefully add coolant to the reservoir and then the radiator, if necessary. (Refer to "Engine Coolant" in the "INSPECTION AND MAINTENANCE" section.)

NOTE:
If your engine overheats and you are unsure what to do, contact your SUZUKI dealer.

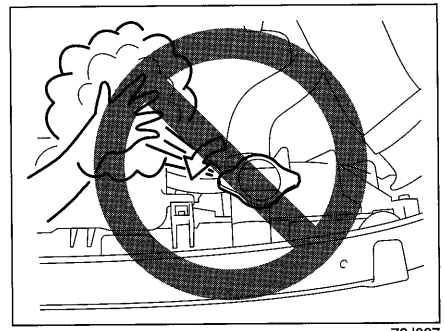

79J007

⚠ WARNING

- **It is hazardous to remove the radiator cap (or degassing tank cap for a diesel engine) when the water temperature is high, because scalding fluid and steam may be blown out under pressure. The cap should only be taken off when the coolant temperature has lowered.**
- **To help prevent personal injury, keep hands, tools and clothing away from the engine cooling fan and air-conditioner fan (if equipped). These electric fans can automatically turn on without warning.**

MEMO

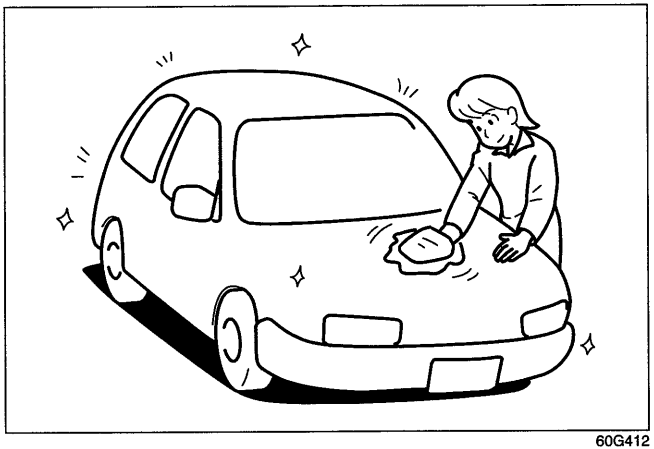

60G412

APPEARANCE CARE

Corrosion Prevention 9-1
Vehicle Cleaning 9-2

Corrosion Prevention

It is important to take good care of your vehicle to protect it from corrosion. Listed below are instructions for how to maintain your vehicle to prevent corrosion. Please read and follow these instructions carefully.

Important Information About Corrosion

Common causes of corrosion

1) Accumulation of road salt, dirt, moisture, or chemicals in hard-to-reach areas of the vehicle underbody or frame.
2) Chipping, scratches and any damage to treated or painted metal surfaces resulting from minor accidents or abrasion by stones and gravel.

Environmental conditions which accelerate corrosion

1) Road salt, dust control chemicals, sea air or industrial pollution will all accelerate the corrosion of metal.
2) High humidity will increase the rate of corrosion particularly when the temperature range is just above the freezing point.
3) Moisture in certain areas of a vehicle for an extended period of time may promote corrosion even though other body sections may be completely dry.
4) High temperatures will cause an accelerated rate of corrosion to parts of the vehicle which are not well ventilated to permit quick drying.

This information illustrates the necessity of keeping your vehicle (particularly the underbody) as clean and dry as possible. It is equally important to repair any damage to the paint or protective coatings as soon as possible.

How to Help Prevent Corrosion

Wash your vehicle frequently

The best way to preserve the finish on your vehicle and to help avoid corrosion is to keep it clean with frequent washing.
Wash your vehicle at least once during the winter and once immediately after the winter. Keep your vehicle, particularly the underside, as clean and dry as possible.
If you frequently drive on salted roads, your vehicle should be washed at least once a month during the winter. If you live near the ocean, your vehicle should be washed at least once a month throughout the year.

For washing instructions, refer to the "Vehicle Cleaning" section.

Remove foreign material deposits

Foreign material such as salts, chemicals, road oil or tar, tree sap, bird droppings and industrial fall-out may damage the finish of your vehicle if it is left on painted surfaces. Remove these types of deposits as quickly as possible. If these deposits are difficult to wash off, an additional cleaner may be required. Be sure that any cleaner you use is not harmful to painted surfaces and is specifically intended for your purposes. Follow the manufacturer's directions when using these special cleaners.

Repair finish damage

Carefully examine your vehicle for damage to the painted surfaces. Should you find any chips or scratches in the paint, touch them up immediately to prevent corrosion from starting. If the chips or scratches have gone through to the bare metal, have a qualified body shop make the repair.

Keep passenger and luggage compartments clean

Moisture, dirt or mud can accumulate under the floor mats and may cause corrosion. Occasionally, check under these mats to ensure that this area is clean and dry. More frequent checks are necessary if the vehicle is used off road or in wet weather.
Certain cargos such as chemicals, fertilizers, cleaners, salts, etc. are extremely corrosive by nature. These products should be transported in sealed containers. If a spill or leak does occur, clean and dry the area immediately.

Store your vehicle in a dry, well-ventilated area
Do not park your vehicle in a damp, poorly ventilated area. If you often wash your vehicle in the garage or if you frequently drive it in when wet, your garage may be damp. The high humidity in the garage may cause or accelerate corrosion. A wet vehicle may corrode even in a heated garage if the ventilation is poor.

⚠ WARNING

Do not apply additional undercoating or rust preventive coating on or around exhaust system components such as the catalytic converter, exhaust pipes, etc. A fire could be started if the undercoating substance becomes overheated.

Vehicle Cleaning

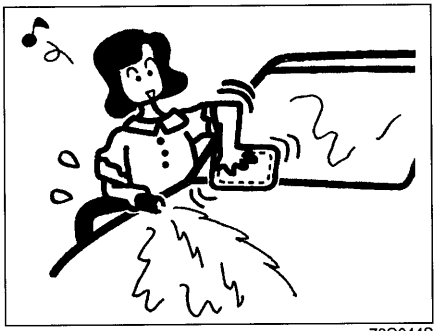

76G044S

⚠ WARNING

When cleaning the interior or exterior of the vehicle, NEVER USE flammable solvents such as lacquer thinners, gasoline, benzene or cleaning materials such as bleaches or strong household detergents. The materials could cause personal injury or damage to the vehicle.

Cleaning the Interior

Vinyl upholstery
Prepare a solution of soap or mild detergent mixed with warm water. Apply the solution to the vinyl with a sponge or soft cloth and let it soak for a few minutes to loosen dirt.
Rub the surface with a clean, damp cloth to remove dirt and the soap solution. If some dirt still remains on the surface, repeat this procedure.

Fabric upholstery
Remove loose dirt with a vacuum cleaner. Using a mild soap solution, rub stained areas with a clean damp cloth. To remove soap, rub the areas again with a cloth dampened with water. Repeat this until the stain is removed, or use a commercial fabric cleaner for tougher stains. If you use a fabric cleaner, carefully follow the manufacturer's instructions and precautions.

Seat belts
Clean seat belts with a mild soap and water. Do not use bleach or dye on the belts. They may weaken the fabric in the belts.

Vinyl floor mats
Ordinary dirt can be removed from vinyl with water or mild soap. Use a brush to help loosen dirt. After the dirt is loosened, rinse the mat thoroughly with water and dry it in the shade.

Carpets
Remove dirt and soil as much as possible with a vacuum cleaner. Using a mild soap solution, rub stained areas with a clean damp cloth. To remove soap, rub the areas again with a cloth dampened with water. Repeat this until the stain is removed, or use a commercial carpet cleaner for tougher stains. If you use a carpet cleaner, carefully follow the manufacturer's instructions and precautions.

Instrument panel and console
NOTE:
Wipe up spills containing chemicals, alcohol, etc., immediately with a soft, damp cloth. Use a mild soap solution if necessary. Do not use cleaners or polishes containing strong solvents or acidic solutions. These chemicals may stain and discolor the instrument panel and console.

Cleaning the Exterior

NOTICE

It is important that your vehicle be kept clean and free from dirt. Failure to keep your vehicle clean may result in fading of the paint or corrosion to various parts of the vehicle body.

Caring for Aluminum Wheels
NOTE:
- *Do not use an acidic or alkaline detergent to wash aluminum wheels. These types of detergent will cause permanent spots, discoloration and cracks on finished surfaces.*
- *Do not use a bristle brush and soap containing an abrasive material. These will damage finished surfaces.*

Washing

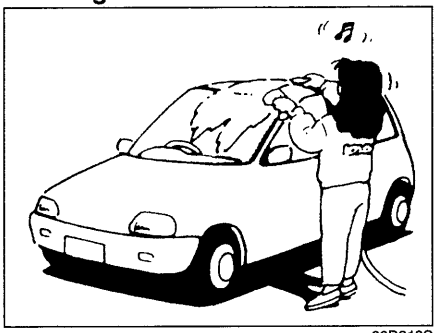

60B212S

⚠ WARNING

- **Never attempt to wash and wax your vehicle with the engine running.**
- **When cleaning the underside of the body and fender, where there may be sharp-edged parts, you should wear gloves and a long-sleeved shirt to protect your hands and arms from being cut.**
- **After washing your vehicle, carefully test the brakes before driving to make sure they have maintained their normal effectiveness.**

When washing the vehicle, park it where direct sunlight does not fall on it and follow the instructions below:

1) Flush the underside of body and wheel housings with pressurized water to remove mud and debris. Use plenty of water.

NOTICE

When washing the vehicle:
- **Avoid directing steam or hot water of more than 80°C (176°F) on plastic parts.**
- **To avoid damaging engine components, do not use pressurized water in the engine compartment.**

2) Rinse the body to loosen the dirt. Remove dirt and mud from the body exterior with running water. You may use a soft sponge or brush. Do not use hard materials which can scratch the paint or plastic. Remember that the headlight covers or lenses are made of plastic in many cases.

NOTICE

To avoid damage to the paint or plastic surface, do not wipe the dirt off without ample water. Be sure to follow above procedure.

3) Wash the entire exterior with a mild detergent or car wash soap using a sponge or soft cloth. The sponge or cloth should be frequently soaked in the soap solution.

NOTICE

When using a commercial car wash product, observe the cautions specified by the manufacturer. Never use strong household detergents or soaps.

4) Once the dirt has been completely removed, rinse off the detergent with running water.
5) After rinsing, wipe off the vehicle body with a wet chamois or cloth and allow it to dry in the shade.
6) Check carefully for damage to painted surfaces. If there is any damage, "touch-up" the damage following the procedure below:
   1. Clean all damaged spots and allow them to dry.

2. Stir the paint and "touch-up" the damaged spots lightly using a small brush.
3. Allow the paint to dry completely.

NOTICE
If you use an automatic car wash, make sure that your vehicle's body parts, such as spoilers, cannot be damaged. If you are in doubt, consult the car wash operator for advice.

Waxing

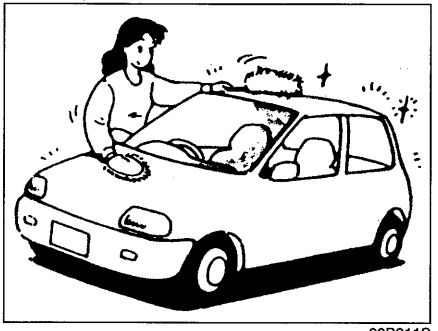

60B211S

After washing the vehicle, waxing and polishing are recommended to further protect and beautify the paint.

- Only use waxes and polishes of good quality.
- When using waxes and polishes, observe the precautions specified by the manufacturers.

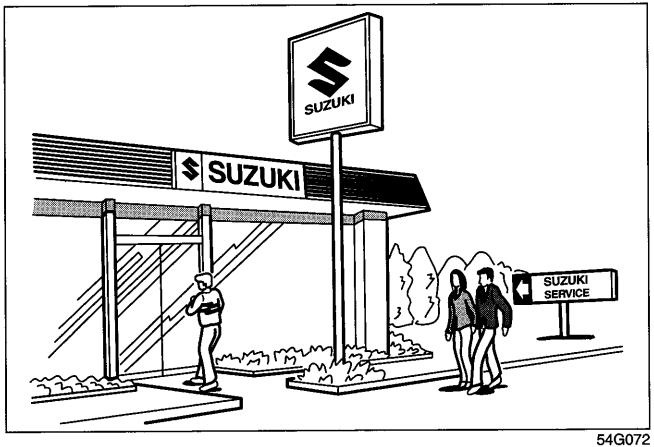

54G072

GENERAL INFORMATION

Vehicle Identification 10-1
Fuel Consumption (for Europe Euro V) 10-2

Vehicle Identification

Chassis Serial Number

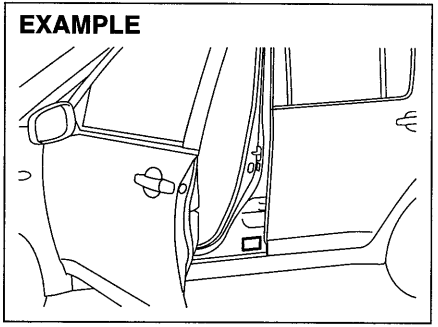

63J104

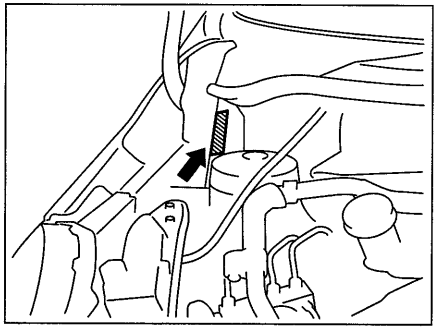

74LHT1002

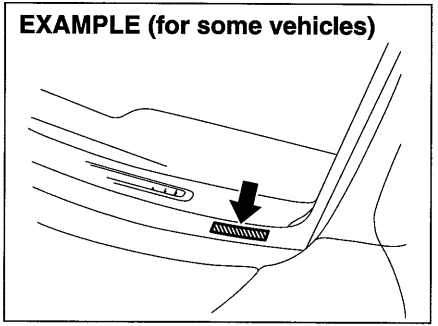

68LM101

The chassis and/or engine serial numbers are used to register the vehicle. They are also used to assist your dealer when ordering or referring to special service information. Whenever you have occasion to consult your SUZUKI dealer, remember to identify your vehicle with this number. Should you find the number difficult to read, you will also find it on the identification plate.

Engine Serial Number

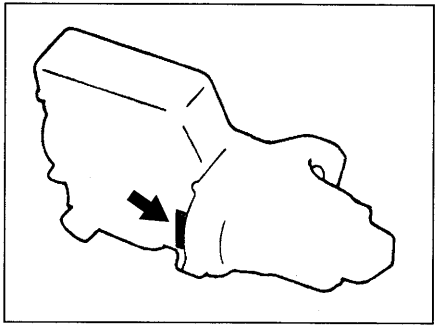

60G128

The engine serial number is stamped on the cylinder block as shown in the illustration.

Fuel Consumption (for Europe Euro V)

M/T: Manual transaxle
A/T: Automatic transaxle

2WD: 2-wheel drive
4WD: 4-wheel drive

		K12B			K12B with ENG A-STOP		D13A	D13A with ENG A-STOP	M16A
		2WD		4WD	2WD	4WD			
		3-door	5-door						
Urban (L/100km)/ CO_2 (g/km)	M/T	6.1/140	6.1/140	6.5/150	5.8/133	6.2/143	4.7/123	4.4/115	8.4/195
	A/T	6.6/152	6.8/157	-	-	-	-	-	-
Extra-urban (L/100km)/ CO_2 (g/km)	M/T	4.4/101	4.4/101	4.9/112	4.4/101	4.8/111	3.4/89	3.4/88	5.2/121
	A/T	4.8/110	4.9/112	-	-	-	-	-	-
Combined (L/100km)/ CO_2 (g/km)	M/T	5.0/116	5.0/116	5.5/126	4.9/113	5.3/123	3.9/101	3.8/98	6.4/147
	A/T	5.5/125	5.6/128	-	-	-	-	-	-

NOTE:
As these data are obtained under certain specific conditions, actual fuel consumption of your vehicle will be different from these data.

MEMO

SPECIFICATIONS

NOTE:
Specifications are subject to change without notice.

M/T: Manual transaxle
A/T: Automatic transaxle
2WD: 2-wheel drive

Gasoline: Gasoline engine model
Diesel: Diesel engine model
4WD: 4-wheel drive

ITEM: Dimensions			UNIT: mm (in.)	EXCEPT SPORT MODEL	SPORT MODEL
Overall length				3850 (151.6)-3980 (156.7)	3890 (153.1)
Overall width				1695 (66.7)-1720 (67.7)	1695 (66.7)
Overall height	2WD			1510 (59.4)	1510 (59.4)
	4WD			1535 (60.4)	–
Wheelbase				2430 (95.7)	2430 (95.7)
Track	Front	175 tire		1490 (58.7)	–
		185 tire		1480 (58.3)	–
		195 tire		–	1470 (57.9)
	Rear	175 tire		1495 (58.9)	–
		185 tire		1485 (58.5)	–
		195 tire		–	1475 (58.1)
Ground clearance	2WD			140 (5.5)	130 (5.1)
	4WD			145 (5.7)	–

ITEM: Mass (weight)			UNIT: kg (lbs)	EXCEPT SPORT MODEL		SPORT MODEL	
Curb mass (weight)	Type			Gasoline	Diesel	3 door	5 door
	M/T	2WD		945-1020 (2083-2249)	1050-1125 (2315-2480)	1040-1045 (2293-2304)	1055-1060 (2326-2337)
		4WD		1035-1085 (2282-2392)	–	–	–
	A/T			975-1040 (2150-2293)	–	–	–
Gross vehicle mass (weight) rating	2WD			1480 (3263)	1560 (3439)	1480 (3263)	1480 (3263)
	4WD			1560 (3439)	–	–	–
Permissible maximum Axle Weight	Front	2WD		800 (1764)	850 (1874)	820 (1808)	820 (1808)
		4WD		830 (1830)	–	–	–
	Rear	2WD		800 (1764)	830 (1830)	800 (1764)	800 (1764)
		4WD		840 (1852)	–	–	–

ITEM: Engine	EXCEPT SPORT MODEL		SPORT MODEL
Type	K12B (DOHC)	D13A (DOHC)	M16A (DOHC)
Number of cylinders	4	←	←
Bore	73.0 mm (2.87 in.)	69.6 mm (2.74 in.)	78.0 mm (3.07 in.)
Stroke	74.2 mm (2.92 in.)	82.0 mm (3.23 in.)	83.0 mm (3.27 in.)
Piston displacement	1242 cm^3 (1242 cc, 75.8 cu.in)	1248 cm^3 (1248 cc, 76.2 cu.in)	1586 cm^3 (1586 cc, 96.7 cu.in)
Compression ratio	11.0 : 1	16.8 : 1	11.0 : 1

ITEM: Electrical		EXCEPT SPORT MODEL		SPORT MODEL
		EXCEPT ENG A-STOP MODEL	ENG A-STOP MODEL	
Standard spark plug	Gasoline	DENSO ZXU20PR11, DENSO XU20EPR-U	←	NGK SILFR6A11
Battery	Gasoline	12V 36AH 300A (EN) or 12V 44AH 350A (EN)	12V 55AH 450A (EN)	12V 36AH 300A (EN) or 12V 44AH 350A (EN)
	Diesel	12V 60AH 620A (EN)	12V 72AH 630A (EN)	–
Fuses		See "INSPECTION AND MAINTENANCE" section.		

ITEM: Lights			WATTAGE	BULB No.
Headlight	Without Discharge Headlights		12V 60/55W	H4
	With Discharge Headlights		12V 35W	D2S
Turn signal light	Front	Without Discharge Headlights	12V 21W	PY21W
		With Discharge Headlights	12V 21W	WY21W
	Rear		12V 21W	PY21W
Side turn signal light (on fender)			12V 5W	WY5W
Side turn signal light (on outside rearview mirror)			LED	–
Position light			12V 5W	W5W
Tail/brake light			12V 5/21W	P21/5W
License plate light			12V 5W	W5W
Reversing light	Except Sport model		12V 21W	P21W
	Sport model		12V 16W	W16W
Interior light			12V 10W	–
Luggage compartment light			12V 10W	–
Spot light			12V 5W	–
Front fog light			12V 55W	H11
Rear fog light			12V 21W	P21W
High mount stop light			LED	–

ITEM: Tire and Wheel	EXCEPT SPORT MODEL		SPORT MODEL
Tire size, front and rear	185/55R16 83V*1	175/65R15 84H*1	195/45R17 81W*1
Rim size	16 X 6J	15 X 5J	17 X 6 1/2J
Tire pressure	For the specified tire pressure, see the Tire Information Label located on the driver's door lock pillar		
	For fuel economical driving, the following tire pressure may be recommended as far as up to 3 occupants. Front 280 kPa (2.80 kg/cm^2, 41 psi) Rear 250 kPa (2.50 kg/cm^2, 36 psi)		

NOTE:
- *Check tire size for your vehicle in the Tire Information Label located on the driver's door lock pillar.*

*1 If you cannot procure tires with the specified load index rate and speed symbol, procure tires with higher load index rate and speed symbol.

INFORMATION: Recommended Snow Equipments	ITEM	EXCEPT SPORT MODEL		SPORT MODEL
	Snow tire	185/55R16	175/65R15	195/50R16*2
	Rim size	16 X 6J	15 X 5J	16 X 6J*3
	Snow chain (for Europe)	Radial thickness: 10 mm Axial thickness: 10 mm		

NOTE:
- *Do not drive at the speed higher than the speed symbol of your snow tires.*

*2 Snow tires in the size of 195/45R17, which are also fitted to SPORT MODEL, may not be availabe in your market.
*3 Rims in the size of 16x6J are not originally equipped for SPORT MODEL.

ITEM: Steering	
Toe-in	In 1.0 ± 1.0 mm (In 0.04 ± 0.04 in.)
Camber angle	-0° 12' ± 1°
Caster angle	5° 12' ± 2°

ITEM: Capacities (approx.)				
Coolant (including reservoir tank)	Gasoline	5M/T		4.5 L (7.9 Imp pt)
		4-speed A/T		4.4 L (7.7 Imp pt)
	Diesel			6.5 L (11.4 Imp pt)
	Sport model			6.2 L (10.9 Imp pt)
Fuel tank	Gasoline	2WD		42 L (9.2 Imp gal)
		4WD		40 L (8.8 Imp gal)
	Diesel			42 L (9.2 Imp gal)
	Sport model			42 L (9.2 Imp gal)
Engine oil	Gasoline			3.1 L (5.5 Imp pt) (replacement with oil filter)
	Diesel			3.2 L (5.6 Imp pt) (replacement with oil filter)
	Sport model			3.9 L (6.9 Imp pt) (replacement with oil filter)
Transaxle oil	Gasoline	5M/T	2WD	2.2 L (3.9 Imp pt)
			4WD	2.5 L (4.4 Imp pt)
		4-speed A/T		5.8 L (10.2 Imp pt)
	Diesel			2.6 L (4.6 Imp pt)
	Sport model			1.8 L (3.2 Imp pt)

INDEX

Symbols

"AIR BAG" Light 2-60
"CRUISE" Indicator Light 2-62, 3-26
"ENG A-STOP" Indicator Light / Warning Light 2-65
"SET" Indicator Light 2-62, 3-26

Numerics

4-Speed Automatic Transaxle 3-20

A

Accelerator Pedal 3-11
Accessory Socket 5-75
Adding Coolant 7-18
Adjusting Seat Position 2-22
Adjusting Seatbacks 2-23
Air Cleaner 7-19
Air Conditioning System 7-46
All Seat Belts 2-32
Anti-Lock Brake System (ABS) 3-28
Anti-Lock Brake System (ABS) Warning Light 2-58
Anti-Lock Braking System (ABS) 3-31
Anti-Theft Feature 5-64
Assist Grips 5-76
Audio System 5-17
Automatic Heating and Air Conditioning System (Climate Control) 5-10
Automatic Lights Operation 2-77
Automatic Transaxle (AT) Fluid 7-24
Average fuel consumption 2-73

B

Battery 7-31
Bluetooth® audio 5-56
Bluetooth® Hands-Free 5-44
Bottle holder 5-81
Brake Assist System 3-28
Brake Fluid 7-26
Brake Pedal 3-11, 7-27
Brake System Warning Light 2-57
Brakes 7-26
Braking 3-28
Brightness Control 2-69
Bulb Replacement 7-37

C

Catalytic Converter 4-1
CD Player 5-30
Central Door Locking System 2-3
Changing Engine Oil and Filter 7-14
Changing Wheels 8-5
Charging Light 2-59
Chassis Serial Number 10-1
Child Restraint 2-38
Child Restraint System for EU Countries 2-38
Child Restraint Systems 2-36
Child-Proof Locks (rear door) 2-5
Clock 2-75
Clutch Pedal 3-11, 7-24
Compact Spare Tire 7-31
Coolant Level Check 7-17
Coolant Replacement 7-19
Corrosion Prevention 9-1
Cruise Control 3-25
Cup Holder and Storage Area 5-80

D
Daily Inspection Checklist 3-1
Daytime Running Light (D.R.L.) System 2-79
Dead Lock System 2-4
Diesel Engine 1-2
Diesel Particulate Filter (DPF®) 3-17
Diesel Particulate Filter (DPF®) Warning Light 2-64
Door Locks 2-2
Drive Belt 7-11
Driver's seat belt reminder light 2-33, 2-59
Driving on Hills 4-3
Driving on Slippery Roads 4-4
Driving range 2-74
E
Electric Mirrors 2-21
Electric Power Steering Light 2-61
Electric Window Controls 2-17
Electronic Stability Program (ESP®) 3-30
Emergency Locking Retractor (ELR) 2-31
ENG A-STOP System (Engine Auto Stop Start System) 3-23
Engine Coolant 7-17
Engine Hood 5-72
Engine Oil and Filter 7-12
Engine Oil Consumption 3-2
Engine Serial Number 10-1
Engine Switch 3-5
ESP® OFF Indicator Light 2-59, 3-32
ESP® OFF Switch 3-32
ESP® Warning Light 2-58, 3-31
Exhaust Gas Warning 3-1
F
Flat Tire Repair Kit 8-6
Floor Mats 5-82
Fluid Control Clutch 7-24
Fluid Level Check 7-24
FM/LW/MW CD PLAYER 5-17
Folding Rear Seats 2-27
Footrest 5-82
Frame Hooks 5-85
Front Air Bags 2-48
Front Fog Light Switch 2-80
Front Passenger Air Bag Deactivation System 2-54
Front passenger's seat belt reminder light 2-33
Front Seat Back Pocket 5-81
Front Seat Heater 2-25
Front Seats 2-22
Fuel Consumption (for Europe Euro V) 10-2
Fuel Filler Cap 5-71
Fuel Filter (Diesel engine) 7-26
Fuel Gauge 2-68
Fuel Recommendation 1-1
Full Wheel Cover 8-6
Fuses 7-33
Fuses in the Engine Compartment 7-33
Fuses under the Dash Board 7-35
G
Gasoline Engine 1-1
Gasoline/Ethanol blends 1-1
Gasoline/Methanol blends 1-1
Gear Oil 7-22
Gear Oil Change 7-24

Gear Oil Level Check 7-23
Glove Box 5-79
Glow Plug Indicator Light 2-64
H
Hazard Warning Switch 2-82
Head Restraints 2-24, 2-26
Headlight Leveling Switch 2-80
Headlight Washer Fluid 7-37
Headlight Washer Switch 2-81
Heated Rear Window and Heated Outside Rearview Mirrors Switch 2-86
Heating and Air Conditioning System 5-1
Heating System 5-3
Highway Driving 4-3
Hill Hold Control System 3-33
Horn 2-85
How the ABS Works 3-30
I
If the Engine is Flooded 8-11
If the Engine Overheats 8-12
If the Starter Does Not Operate 8-11
If You Cannot Shift Automatic Transaxle Gearshift Lever Out of "P" (PARK) 3-22
If Your Vehicle Gets Stuck 4-5
Ignition Key Reminder 2-2
Ignition Switch 3-3
Immobilizer System 2-1
Immobilizer/Keyless Push Start System Warning Light 2-60
Improving Fuel Economy 4-2
Inside Rearview Mirror 2-20
Installation of Child Restraint with Top Strap 2-44
Installation of Radio Frequency Transmitters 5-16
Installation with ISOFIX type Anchorages 2-42
Installation with Lap-Shoulder Seat Belts 2-42
Instantaneous Fuel Consumption 2-72
Instrument Cluster 2-56
Interior Light Switch 5-74
Interior Workable Area for Engine Starting, Power Supply Mode Selection and "Remote Controller Outside" Warning 3-9
iPod® 5-41
J
Jacking Instructions 8-2
Jump Starting Instructions 8-9
K
Keyless Entry System Transmitter 2-7, 2-13
Keyless Push Start System 3-6
Keyless Push Start System Remote Controller 2-7
Keys 2-1
L
Lap-Shoulder Belt 2-31
Light Reminder Buzzer 2-79
Lighting Control Lever 2-75
Lighting Operation 2-76
Low Fuel Warning Light 2-61
Luggage Compartment Cover 5-83
Luggage Compartment Light 5-75
M
Main Beam (high beam) Indicator Light 2-63
Maintenance Recommended under Severe Driving Conditions 7-7

Maintenance Schedule 7-2
Malfunction Indicator Light 2-60
Manual Heating and Air Conditioning System 5-5
Manual Transaxle 3-18
Manual Transaxle Oil 7-22
Manual Window Control 2-17
Mirrors 2-20
MP3/WMA Disc 5-33
O
Odometer 2-74
Oil Change Request Light 2-63
Oil Level Check 7-13
Oil Pressure Light 2-59
Open Door Warning Light 2-61
Outside Rearview Mirrors 2-21
Outside Rearview Mirrors Folding Switch 2-22
P
Parking Brake 7-28
Parking Brake Lever 3-9
Pedal 3-11
Periodic Maintenance Schedule 7-2
Power-Assisted Brakes 3-28
R
Radio Antenna 5-16
RDS (Radio Data System) 5-27
Rear Seats 2-26
Rear Window Wiper/Washer Switch 2-84
Refill with Oil and Check for Leaks 7-17
Refilling 7-14
Remote Audio Controls 5-62
Replace the Oil Filter 7-15
Replacement of the Battery 2-15
Roof Rack Anchors 5-84
Running-in 4-1
S
Seat Adjustment 2-22
Seat Belt Hanger 2-35
Seat Belt Inspection 2-35
Seat Belt Pretensioner System 2-45
Seat Belt Reminder 2-33
Seat Belts and Child Restraint Systems 2-29
Selection of Coolant 7-17
Selection of Ignition Modes 3-7
Shopping Hook 5-83
Shoulder Anchor Height Adjuster 2-34
Side Air Bags and Side Curtain Air Bags 2-50
Side Door Locks 2-2
Spark Plugs 7-21
SPECIFICATIONS 11-1
Specified Fluid 7-24
Specified Oil 7-12
Speedometer 2-67
Spot Light 5-75
Stability Control System 3-30
Starting the Engine (Vehicle with Keyless Push Start System) 3-13
Starting the Engine (Vehicle without Keyless Push Start System) 3-12
Steering 7-28
Steering Lock Lever 2-85
Sun Visor 5-73
Sunroof 5-77

Supplemental Restraint System (air bags) 2-47
T
Tachometer 2-67
Tailgate 2-6
Temperature Gauge 2-68
Theft Deterrent Light 2-16
Thermometer 2-70
Tilt/Telescoping 2-85
Tire Chains 4-4
Tire Changing Tool 8-1
Tire Inspection 7-29
Tire Rotation 7-30
Tires 7-29
Towing 8-10
Towing Your Vehicle (recreational towing) 6-6
Traction Control System 3-30
Trailer hitch installation points 6-5
Trailer Towing 6-1
Transaxle selector position indicator
(for automatic transaxle) 2-71
Transaxle Warning Light 2-63
Trip meter 2-72
Turn Signal Control Lever 2-81
Turn Signal Indicators 2-63
Turn Signal Operation 2-81
U
Universal Serial Bus (USB) Socket 5-76
USB device 5-38
Using the Transaxle 3-18
V
Vehicle Cleaning 9-2
Vehicle Identification 10-1
Vehicle Loading 6-1
W
Walk-In Type Seats 2-23
Warning and Indicator Lights 2-57
Washing 9-4
Waxing 9-5
Windows 2-17
Windshield Washer 2-83
Windshield Washer Fluid 7-45
Windshield Wiper and Washer Lever 2-82
Windshield Wipers 2-83
Wiper Blades 7-42

MEMO

Calsonic Kansei
CalsonicKansei Corp.
2-1917, Nisshin-cho, Kita-ku, Saitama-shi, Saitama-ken
331-8501, Japan
TEL : +81-48-660-4073 FAX : +81-48-661-1026

CE

[Czech]	Calsonic Kansei Corp. tímto prohlašuje, že tento TS008/S57L0/R57L1/TWK1A001 je ve shodě se základními požadavky a dalšími příslušnými ustanoveními směrnice 1999/5/ES.
[Danish]	Undertegnede Calsonic Kansei Corp. erklærer herved, at følgende udstyr TS008/S57L0/R57L1/TWK1A001 overholder de væsentlige krav og øvrige relevante krav i direktiv 1999/5/EF.
[German]	Hiermit erklärt Calsonic Kansei Corp., dass sich dieser/diese/dieses TS008/S57L0/R57L1/TWK1A001 in Ü bereinstimmung mit den grundlegenden Anforderungen und den anderen relevanten Vorschriften der Richtlinie 1999/5/EG befindet".
[Estonian]	Käesolevaga kinnitab Calsonic Kansei Corp. seadme TS008/S57L0/R57L1/TWK1A001 vastavust direktiivi 1999/5/EÜ põhinõuetele ja nimetatud direktiivist tulenevatele teistele asjakohastele sätetele.
[English]	Hereby, Calsonic Kansei Corp. , declares that this TS008/S57L0/R57L1/TWK1A001 is in compliance with the essential requirements and other relevant provisions of Directive 1999/5/EC.
[Spanish]	Por medio de la presente Calsonic Kansei Corp. declara que el TS008/S57L0/R57L1/TWK1A001 cumple con los requisitos esenciales y cualesquiera otras disposiciones aplicables o exigibles de la Directiva 1999/5/CE.
[Greek]	ΜΕ ΤΗΝ ΠΑΡΟΥΣΑ Calsonic Kansei Corp. ΔΗΛΩΝΕΙ ΟΤΙ TS008/S57L0/R57L1/TWK1A001 ΣΥΜΜΟΡΦΩΝΕΤΑΙ ΠΡΟΣ ΤΙΣ ΟΥΣΙΩΔΕΙΣ ΑΠΑΙΤΗΣΕΙΣ ΚΑΙ ΤΙΣ ΛΟΙΠΕΣ ΣΧΕΤΙΚΕΣ ΔΙΑΤΑΞΕΙΣ ΤΗΣ ΟΔΗΓΙΑΣ 1999/5/ΕΚ.
[French]	Par la présente Calsonic Kansei Corp. déclare que l'appareil TS008/S57L0/R57L1/TWK1A001 est conforme aux exigences essentielles et aux autres dispositions pertinentes de la directive 1999/5/CE.
[Italian]	Con la presente Calsonic Kansei Corp. dichiara che questo TS008/S57L0/R57L1/TWK1A001 è conforme ai requisiti essenziali ed alle altre disposizioni pertinenti stabilite dalla direttiva 1999/5/CE.
[Latvian]	Ar šo Calsonic Kansei Corp. deklarē, ka TS008/S57L0/R57L1/TWK1A001 atbilst Direktīvas 1999/5/EK būtiskajām prasībām un citiem ar to saistītajiem noteikumiem.
[Lithuanian]	Šiuo Calsonic Kansei Corp. deklaruoja, kad šis TS008/S57L0/R57L1/TWK1A001 atitinka esminius reikalavimus ir kitas 1999/5/EB Direktyvos nuostatas.
[Dutch]	Hierbij verklaart Calsonic Kansei Corp. dat het toestel TS008/S57L0/R57L1/TWK1A001 in overeenstemming is met de essentiële eisen en de andere relevante bepalingen van richtlijn 1999/5/EG.
[Maltese]	Hawnhekk, Calsonic Kansei Corp. , jiddikjara li dan TS008/S57L0/R57L1/TWK1A001 jikkonforma mal-ħtiġijiet essenzjali u ma provvedimenti ohrajn relevanti li hemm fid-Dirrettiva 1999/5/EC.
[Hungarian]	Alulírott, Calsonic Kansei Corp. nyilatkozom, hogy a TS008/S57L0/R57L1/TWK1A001 megfelel a vonatkozó alapvető követelményeknek és az 1999/5/EC irányelv egyéb előírásainak.
[Polish]	Calsonic Kansei Corp. niniejszym oświadcza, że TS008/S57L0/R57L1/TWK1A001 spełnia zasadnicze wymogi oraz inne istotne postanowienia dyrektywy 1999/5/EC.
[Portuguese]	Calsonic Kansei Corp. declara que este TS008/S57L0/R57L1/TWK1A001 está conforme com os requisitos essenciais e outras disposições da Directiva 1999/5/CE.
[Slovenian]	Calsonic Kansei Corp. izjavlja, da je ta TS008/S57L0/R57L1/TWK1A001 v skladu z bistvenimi zahtevami in ostalimi relevantnimi določili direktive 1999/5/ES.
[Slovak]	Calsonic Kansei Corp. týmto vyhlasuje, že TS008/S57L0/R57L1/TWK1A001 spĺňa základné požiadavky a všetky príslušné ustanovenia Smernice 1999/5/ES.
[Finnish]	Calsonic Kansei Corp. vakuuttaa täten että TS008/S57L0/R57L1/TWK1A001 tyyppinen laite on direktiivin 1999/5/EY oleellisten vaatimusten ja sitä koskevien direktiivin muiden ehtojen mukainen.
[Swedish]	Härmed intygar Calsonic Kansei Corp. att denna TS008/S57L0/R57L1/TWK1A001 står I överensstämmelse med de väsentliga egenskapskrav och övriga relevanta bestämmelser som framgår av direktiv 1999/5/EG.
[Icelandic]	Hér með lýsir Calsonic Kansei Corp. yfir því að TS008/S57L0/R57L1/TWK1A001 er í samræmi við grunnkröfur og aðrar kröfur, sem gerðar eru í tilskipun 1999/5/EC.
[Norwegian]	Calsonic Kansei Corp. erklærer herved at utstyret TS008/S57L0/R57L1/TWK1A001 er i samsvar med de grunnleggende krav og øvrige relevante krav i direktiv 1999/5/EF.
[Turkish]	İşbu belge ile Calsonic Kansei Corp. , bu TS008/S57L0/R57L1/TWK1A001'in 1995/5/EC Yönetmeliği esas gereksinimlerine ve diğer şartlarına uygun olduğunu beyan eder.
[Romania]	„Noi Calsonic Kansei Corp. declarăm că aparatul TS008/S57L0/R57L1/TWK1A001 este în conformitate cu cerințele esențiale și cu alte prevederi relevante ale Hotărârii Guvernului nr.88/2003 și Directivei 1999/5/EC.
[Bulgarian]	С настоящия документ Calsonic Kansei Corp. декларира, че TS008/S57L0/R57L1/TWK1A001 е в съгласие с основните изисквания и съответните постановления на Директива 1999/5/EC.

OMRON Automotive Electronics Co. Ltd.
6368 Nenjo-zaka, Okusa, Komaki, Aichi 485-0802
JAPAN
oae_denpaninsho@oae.omron.co.jp

[Czech]	OMRON Automotive Electronics Co. Ltd. tímto prohlašuje, že tento [T68L0, R68K0, I68L0] je ve shodě se základními požadavky a dalšími příslušnými ustanoveními směrnice 1999/5/ES.
[Danish]	Undertegnede OMRON Automotive Electronics Co. Ltd. erklærer herved, at følgende udstyr [T68L0, R68K0, I68L0] overholder de væsentlige krav og øvrige relevante krav i direktiv 1999/5/EF.
[German]	Hiermit erklärt OMRON Automotive Electronics Co. Ltd., dass sich das Gerät [T68L0, R68K0, I68L0] in Übereinstimmung mit den grundlegenden Anforderungen und den übrigen einschlägigen Bestimmungen der Richtlinie 1999/5/EG befindet.
[Estonian]	Käesolevaga kinnitab OMRON Automotive Electronics Co. Ltd. seadme [T68L0, R68K0, I68L0] vastavust direktiivi 1999/5/EÜ põhinõuetele ja nimetatud direktiivist tulenevatele teistele asjakohastele sätetele.
[English]	Hereby, OMRON Automotive Electronics Co. Ltd., declares that this [T68L0, R68K0, I68L0] is in compliance with the essential requirements and other relevant provisions of Directive 1999/5/EC.
[Spanish]	Por medio de la presente OMRON Automotive Electronics Co. Ltd. declara que el [T68L0, R68K0, I68L0] cumple con los requisitos esenciales y cualesquiera otras disposiciones aplicables o exigibles de la Directiva 1999/5/CE.
[Greek]	ΜΕ ΤΗΝ ΠΑΡΟΥΣΑ OMRON Automotive Electronics Co. Ltd. ΔΗΛΩΝΕΙ ΟΤΙ [T68L0, R68K0, I68L0] ΣΥΜΜΟΡΦΩΝΕΤΑΙ ΠΡΟΣ ΤΙΣ ΟΥΣΙΩΔΕΙΣ ΑΠΑΙΤΗΣΕΙΣ ΚΑΙ ΤΙΣ ΛΟΙΠΕΣ ΣΧΕΤΙΚΕΣ ΔΙΑΤΑΞΕΙΣ ΤΗΣ ΟΔΗΓΙΑΣ 1999/5/ΕΚ.
[French]	Par la présente OMRON Automotive Electronics Co. Ltd. déclare que l'appareil [T68L0, R68K0, I68L0] est conforme aux exigences essentielles et aux autres dispositions pertinentes de la directive 1999/5/CE.
[Italian]	Con la presente OMRON Automotive Electronics Co. Ltd. dichiara che questo [T68L0, R68K0, I68L0] è conforme ai requisiti essenziali ed alle altre disposizioni pertinenti stabilite dalla direttiva 1999/5/CE.
[Latvian]	Ar šo OMRON Automotive Electronics Co. Ltd. deklarē, ka [T68L0, R68K0, I68L0] atbilst Direktīvas 1999/5/EK būtiskajām prasībām un citiem ar to saistītajiem noteikumiem.
[Lithuanian]	Šiuo OMRON Automotive Electronics Co. Ltd. deklaruoja, kad šis [T68L0, R68K0, I68L0] atitinka esminius reikalavimus ir kitas 1999/5/EB Direktyvos nuostatas.
[Dutch]	Hierbij verklaart OMRON Automotive Electronics Co. Ltd. dat het toestel [T68L0, R68K0, I68L0] in overeenstemming is met de essentiële eisen en de andere relevante bepalingen van richtlijn 1999/5/EG.
[Maltese]	Hawnhekk, OMRON Automotive Electronics Co. Ltd., jiddikjara li dan [T68L0, R68K0, I68L0] jikkonforma mal-ħtiġijiet essenzjali u ma provvedimenti oħrajn relevanti li hemm fid-Dirrettiva 1999/5/EC.
[Hungarian]	Alulírott, OMRON Automotive Electronics Co. Ltd. nyilatkozom, hogy a [T68L0, R68K0, I68L0] megfelel a vonatkozó alapvető követelményeknek és az 1999/5/EC irányelv egyéb előírásainak.
[Polish]	[OMRON Automotive Electronics Co. Ltd.] niniejszym oświadcza, że [T68L0, R68K0, I68L0] spełnia zasadnicze wymogi oraz inne istotne postanowienia dyrektywy 1999/5/EC.
[Portuguese]	OMRON Automotive Electronics Co. Ltd. declara que este [T68L0, R68K0, I68L0] está conforme com os requisitos essenciais e outras disposições da Directiva 1999/5/CE.
[Slovenian]	OMRON Automotive Electronics Co. Ltd. izjavlja, da je ta [T68L0, R68K0, I68L0] v skladu z bistvenimi zahtevami in ostalimi relevantnimi določili direktive 1999/5/ES.
[Slovak]	OMRON Automotive Electronics Co. Ltd. týmto vyhlasuje, že [T68L0, R68K0, I68L0] spĺňa základné požiadavky a všetky príslušné ustanovenia Smernice 1999/5/ES.
[Finnish]	OMRON Automotive Electronics Co. Ltd. vakuuttaa täten että [T68L0, R68K0, I68L0] tyyppinen laite on direktiivin 1999/5/EY oleellisten vaatimusten ja sitä koskevien direktiivin muiden ehtojen mukainen.
[Swedish]	Härmed intygar OMRON Automotive Electronics Co. Ltd. att denna [T68L0, R68K0, I68L0] står I överensstämmelse med de väsentliga egenskapskrav och övriga relevanta bestämmelser som framgår av direktiv 1999/5/EG.
[Icelandic]	Hér með lýsir OMRON Automotive Electronics Co. Ltd. yfir því að [T68L0, R68K0, I68L0] er í samræmi við grunnkröfur og aðrar kröfur, sem gerðar eru í tilskipun 1999/5/EC.
[Norwegian]	OMRON Automotive Electronics Co. Ltd. erklærer herved at utstyret [T68L0, R68K0, I68L0] er i samsvar med de grunnleggende krav og øvrige relevante krav i direktiv 1999/5/EF.
[Turkish]	İşbu belge ile OMRON Automotive Electronics Co. Ltd., bu [T68L0, R68K0, I68L0]'in 1995/5/EC Yönetmeliği esas gereksinimlerine ve diğer şartlarına uygun olduğunu beyan eder.
[Romania]	„Noi OMRON Automotive Electronics Co. Ltd. declarăm că aparatul [T68L0, R68K0, I68L0] este în conformitate cu cerinţele esenţiale şi cu alte prevederi relevante ale Hotărârii Guvernului nr.88/2003 şi Directivei 1999/5/EC.
[Bulgarian]	С настоящия документOMRON Automotive Electronics Co. Ltd. декларира, че [T68L0, R68K0, I68L0] е в съгласие с основните изисквания и съответните постановления на Директива 1999/5/EC.

Panasonic Corporation
Automotive Systems Company

4261 Ikonobe-cho, Tsuzuki-ku, Yokohama City 224-8520, Japan

DECLARATION of CONFORMITY

We, **Panasonic Corporation, Automotive Systems Company** of the above address, hereby declare, at our sole responsibility that the following product conforms to the Essential Requirements of the Radio and Telecommunications Terminal Equipment Directive 1999/5/EC in accordance with the tests conducted to the appropriate requirements of the relevant standards, as listed herewith.

Product: **Bluetooth module**

Model/ Type Number: **C5ZZZ0000038 / C5ZZZ0000039 / C5ZZZ0000040**

* The difference of the variant model is as follows:
- Updated Hands-free version: 1.5 (current model has ver. 1.0)
- Additional AV profile
- Language available for Voice Recognition/ Guidance

There is no difference in the RF part or its external appearance and therefore no modification was made in radio/electrical characteristics.

Directive and Standards used:

Radio: EN300 328 V1.7.1: 2006-10

EMC: EN301 489-1 V1.8.1: 2008-04
EN301 489-17V2.1.1:2009-5

LVD: IEC60950-1:2005,Second Edition /
EN60950-1:2006+Amd.11:2009
IEC60065:2001+Amd.1:2005 /
EN60065:2002+A1:2006+A11:2008

Year of affixing CE marking: 2008

CE

Signature : Takahisa Sakai

Name : Takahisa Sakai

Position : Senior Engineer

Date : July 9, 2010

Declaration of Conformity (Doc)

Please refer to the following for Declaration of Conformity (Doc) in each language.

Czech

CE Panasonic Corporation tímto prohlašuje, že tento C5ZZZ0000040 je ve shodě se základními požadavky a dalšími příslušnými ustanoveními směrnice 1999/5/ES.

Danish

CE Undertegnede Panasonic Corporation erklærer herved, at følgende udstyr C5ZZZ0000040 overholder de væsentlige krav og øvrige relevante krav i direktiv 1999/5/EF.

Dutch

CE Hierbij verklaart Panasonic Corporation dat het toestel C5ZZZ0000040 in overeenstemming is met de essentiële eisen en de andere relevante bepalingen van richtlijn 1999/5/EG.

Estonian

CE Käesolevaga kinnitab Panasonic Corporation seadme C5ZZZ0000040 vastavust direktiivi 1999/5/EÜ põhinõuetele ja nimetatud direktiivist tulenevatele teistele asjakohastele sätetele.

German

CE Hiermit erklärt Panasonic Corporation, dass sich das Gerät C5ZZZ0000040 in Übereinstimmung mit den grundlegenden Anforderungen und den übrigen einschlägigen Bestimmungen der Richtlinie 1999/5/EG befindet.

Greek

CE ΜΕ ΤΗΝ ΠΑΡΟΥΣΑ Panasonic Corporation ΔΗΛΩΝΕΙ ΟΤΙ C5ZZZ0000040 ΣΥΜΜΟΡΦΩΝΕΤΑΙ ΠΡΟΣ ΤΙΣ ΟΥΣΙΩΔΕΙΣ ΑΠΑΙΤΗΣΕΙΣ ΚΑΙ ΤΙΣ ΛΟΙΠΕΣ ΣΧΕΤΙΚΕΣ ΔΙΑΤΑΞΕΙΣ ΤΗΣ ΟΔΗΓΙΑΣ 1999/5/ΕΚ.

Hungarian

CE Alulírott, Panasonic Corporation nyilatkozom, hogy a C5ZZZ0000040 megfelel a vonatkozó alapvető követelményeknek és az 1999/5/EC irányelv egyéb előírásainak.

Finnish

CE Panasonic Corporation vakuuttaa täten että C5ZZZ0000040 tyyppinen laite on direktiivin 1999/5/EY oleellisten vaatimusten ja sitä koskevien direktiivin muiden ehtojen mukainen.

French

CE Par la présente Panasonic Corporation déclare que l'appareil C5ZZZ0000040 est conforme aux exigences essentielles et aux autres dispositions pertinentes de la directive 1999/5/CE.

Icelandic

CE Hér með lýsir Panasonic Corporation yfir því að C5ZZZ0000040 er í samræmi við grunnkröfur og aðrar kröfur, sem gerðar eru í tilskipun 1999/5/EC.

Italian

CE Con la presente Panasonic Corporation dichiara che questo C5ZZZ0000040 è conforme ai requisiti essenziali ed alle altre disposizioni pertinenti stabilite dalla direttiva 1999/5/CE.

Latvian

CE Ar šo Panasonic Corporation deklarē, ka C5ZZZ0000040 atbilst Direktīvas 1999/5/EK būtiskajām prasībām un citiem ar to saistītajiem noteikumiem.

Lithuanian

CE Šiuo Panasonic Corporation deklaruoja, kad šis C5ZZZ0000040 atitinka esminius reikalavimus ir kitas 1999/5/EB Direktyvos nuostatas.

Maltese

CE Hawnhekk, Panasonic Corporation, jiddikjara li dan C5ZZZ0000040 jikkonforma mal-ħtiġijiet essenzjali u ma provvedimenti oħrajn relevanti li hemm fid-Dirrettiva 1999/5/EC.

Norwegian

CE Panasonic Corporation erklærer herved at utstyret C5ZZZ0000040 er i samsvar med de grunnleggende krav og øvrige relevante krav i direktiv 1999/5/EF.

Polish

CE Niniejszym Panasonic Corporation oświadcza, że C5ZZZ0000040 jest zgodny z zasadniczymi wymogami oraz pozostałymi stosownymi postanowieniami Dyrektywy 1999/5/EC.

Portuguese

CE Panasonic Corporation declara que este C5ZZZ0000040 está conforme com os requisitos essenciais e outras disposições da Directiva 1999/5/CE.

Slovak

CE Panasonic Corporation týmto vyhlasuje, že C5ZZZ0000040 spĺňa základné požiadavky a všetky príslušné ustanovenia Smernice 1999/5/ES.

Slovenian

CE Panasonic Corporation izjavlja, da je ta C5ZZZ0000040 v skladu z bistvenimi zahtevami in ostalimi relevantnimi določili direktive 1999/5/ES.

Spanish

CE Por medio de la presente Panasonic Corporation declara que el C5ZZZ0000040 cumple con los requisitos esenciales y cualesquiera otras disposiciones aplicables o exigibles de la Directiva 1999/5/CE.

Swedish

CE Härmed intygar Panasonic Corporation att denna C5ZZZ0000040 står I överensstämmelse med de väsentliga egenskapskrav och övriga relevanta bestämmelser som framgår av direktiv 1999/5/EG.

Declaration of Conformity

CE

1. Manufacturer/s :
a) Model/s : 81A
RIKENKAKI CO., LTD.
5-6-12 Chiyoda, Sakado-shi, Saitama 350-0214 JAPAN

b) Model/s : 55L, 72K, 54L, 77K
CHANGZHOU RIKENSEIKO MACHINERY CO., LTD.
No. 1903 Zhongwu Ave. Zhonglou Changzhou, Jiangsu CHINA

2. Legal person authorised to compile the technical file :
Suzuki International Europe GmbH
Service Automobile
Suzuki-Allee 7
64625 Bensheim GERMANY

3. Product : Pantograph jack

4. Function : Lifting motor vehicle

5. Model	6. Type
55L	Suzuki Type-Ⅰ
72K	Suzuki Type-Ⅱ
54L	Suzuki Type-Ⅲ
81A	Suzuki Type-Ⅳ
77K	Suzuki Type-Ⅴ

7. The undersigned, Mr. Ryoichi Hiraki, representing the manufacturers, herewith declares that the machinery described below fulfils all the relevant provisions of :
・The EC-directive 2006/42/EC on machinery

8. References to harmonized standards : EN1494:2000+A1:2008

9. Other standards or specifications : —

10. Date : 7 Aug, 2013

11. Signature : Ryoichi Hiraki

12. Name : Ryoichi Hiraki

13. Position : President

Note: This declaration becomes invalid, if technical or operational modifications are introduced without the manufacturers consent.

Български (Bulgarian)

Декларация за съответствие

1. Производител(и):
а) Модел(и) б) Модел(и)
2. Юридическо лице, упълномощено да състави техническия файл
3. Продукт : Пантографен крик
4. Функция : Повдигане на автомобил
5. Модел
6. Тип
7. Долуподписаният, г-н Риочи Хираки, представящ производителите, с настоящото декларира, че описаното по-долу механично оборудване отговаря на всички приложими изисквания на:
• Директива 2006/42/ЕО относно машините
8. Справки с хармонизирани стандарти
9. Други стандарти и спецификации
10. Дата
11. Подпис
12. Име
13. Длъжност : Президент

Hrvatski (Croatian)

Izjava o sukladnosti

1. Proizvođač/i
a) Model/i b) Model/i
2. Pravna osoba ovlaštena za sastavljanje tehničkog lista
3. Proizvod : pantografska dizalica
4. Funkcija : podizanje motornih vozila
5. Model
6. Tip
7. Ja, g. Ryoichi Hiraki, kao predstavnik proizvođača, ovime izjavljujem da stroj opisan u nastavku ispunjava sve relevantne odredbe:
• Direktive EZ 2006/42/EZ o strojevima
8. Upućivanje na uskladene norme
9. Druge norme ili specifikacije
10. Datum
11. Potpis
12. Ime i prezime
13. Funkcija : Predsjednik

Česky (Czech)

Prohlášení o shodě

1. Výrobce/ci
a) Model/y b) Model/y
2. Oprávněná osoba, která smí vyhotovit technický soubor
3. Výrobek : Zvedák
4. Funkce : Zvedání motorových vozidel
5. Model
6. Typ
7. Níže podepsaná osoba, p. Ryoichi Hiraki, jako zástupce výrobců tímto prohlašuje, že níže uvedené zařízení splňuje všechna nezbytná ustanovení:
• Směrnice ES 2006/42/ES o strojírenství
8. Odkazy na harmonizované normy
9. Další normy nebo parametry
10. Datum
11. Podpis
12. Jméno
13. Funkce : Prezident

Dansk (Danish)

Overensstemmelseserklæring

1. Fabrikant(er)
a) Model(ler) b) Model(ler)
2. Juridisk person med bemyndigelse til at samle det tekniske dossier
3. Produkt : Saksedonkraft
4. Funktion : Løft af motorkøretøj
5. Model
6. Type
7. Undertegnede, Hr. Ryoichi Hiraki, der repræsenterer fabrikanterne, erklærer hermed, at den herunder beskrevne maskine er i overensstemmelse med de relevante bestemmelser i:
• EF-direktiv 2006/42/EF om maskiner
8. Henvisninger til harmoniserede standarder
9. Øvrige standarder eller specifikationer
10. Dato
11. Underskrift
12. Navn
13. Stilling : Direktør

Nederlands (Dutch)

Conformiteitsverklaring

1. Fabrikant(en)
a) Model(len) b) Model(len)
2. Persoon die wettelijk gemachtigd is om het technische dossier samen te stellen
3. Product : Schaarkrik
4. Functie : Opkrikken van auto
5. Model
6. Type
7. Ondergetekende, Mr. Ryoichi Hiraki, hiertoe door de fabrikanten gemachtigd, verklaart dat de uitrusting die hieronder staat beschreven voldoet aan alle relevante voorwaarden van:
• de EG machinerichtlijn 2006/42/EC
8. Referenties naar de geharmoniseerde normen
9. Andere normen of specificaties
10. Datum
11. Handtekening
12. Naam
13. Functie : President

Eesti (Estonian)

Vastavusdeklaratsioon

1. Tootja/d
a) Mudel/id b) Mudel/id
2. Tehnilise dokumentatsiooni koostamise õigusega juriidiline isik
3. Toode : pantograafiungraud
4. Funktsioon : mootorsõiduki tõstmine
5. Mudel
6. Tüüp
7. Allakirjutanu, Hr. Ryoichi Hiraki, kes esindab tootjat, kinnitab käesolevaga, et allpool kirjeldatud seade vastab kõikidele siljärgnevate direktiivide asjakohastele sätetele:
•EÜ masinadirektiiv 2006/42/EÜ
8. Viited ühtlustatud standarditele
9. Muud standardid või spetsifikatsioonid
10. Kuupäev
11. Allkiri
12. Nimi
13. Ametikoht : president

Suomi (Finnish)

Vaatimustenmukaisuusilmoitus

1. Valmistaja(t)
a) Malli(t) b) Malli(t)
2. Henkilö, joka on valtuutettu kokoamaan tekninen erittelmä
3. Tuote : Saksitunkki
4. Toiminta : Moottorijaoneuvon nosto
5. Malli
6. Tyyppi
7. Allekirjoittanut, herra Ryoichi Hiraki, valmistajan edustaja, ilmoittaa täten, että alla kuvattu kone täyttää seuraavien direktiivien vaatimukset:
• EY-konedirektiivi 2006/42/EY
8. Käytetyt yhdenmukaistetut standardit
9. Muut käytetyt standardit ja spesifikaatiot
10. Aika
11. Allekirjoitus
12. Nimi
13. Asema : Presidentti

Français (French)

Déclaration de conformité

1. Fabricant(s)
a) Modèle(s) b) Modèle(s)
2. Personne légalement autorisée à compiler le dossier technique
3. Produit : Cric à parallélogramme
4. Fonction : Lever un véhicule motorisé
5. Modèle
6. Type
7. Je soussigné, M. Ryoichi Hiraki, représentant des fabricants, déclare par les présentes que le dispositif ci-dessous répond à toutes les dispositions correspondantes de :
• La directive européenne 2006/42/CE relative aux machines
8. Références à des normes harmonisées
9. Autres normes ou spécifications
10. Date
11. Signature
12. Nom
13. Fonction : Président

Deutsch (German)

Konformitätserklärung

1. Hersteller
a) Modell(e) b) Modell(e)
2. Verantwortlicher für die Zusammenstellung der technischen Unterlagen
3. Produkt : Scherenheber
4. Funktion : Hebemotor Fahrzeug
5. Modell
6. Typ
7. Der Unterzeichnete, Herr Ryoichi Hiraki, Vertreter des Herstellers, erklärt hiermit, dass die im Folgenden beschriebene Maschine die relevanten Vorgaben der Folgenden Normen erfüllt:
• EG-Maschinenrichtlinie 2006/42/EG
8. Anlehnung an harmonisierte Normen
9. Sonstige Normen oder Spezifikationen
10. Datum
11. Unterschrift
12. Name
13. Position : Direktor

Ελληνικά (Greek)

Δήλωση Πιστότητας

1. Κατασκευαστής/-ές
   α) Μοντέλο/-α β) Μοντέλο/-α
2. Νομικό πρόσωπο εξουσιοδοτημένο να συντάξει το τεχνικό αρχείο
3. Προϊόν : Γρύλος πανταγράφου
4. Λειτουργία : Ανύψωση μηχανοκίνητου οχήματος
5. Μοντέλο
6. Είδος
7. Ο υπογράφων, κ. Ryoichi Hiraki, εκπροσωπώντας τους κατασκευαστές, δηλώνει ότι του παρόντος ότι τα μηχανήματα που περιγράφονται κατωτέρω πληρούν όλες τις σχετικές διατάξεις της:
   - Ευρωπαϊκής Οδηγίας 2006/42/ΕΚ σχετικά με τα μηχανήματα
8. Αναφορές σε εναρμονισμένα πρότυπα
9. Άλλα πρότυπα ή προδιαγραφές
10. Ημερομηνία
11. Υπογραφή
12. Όνομα
13. Θέση : Πρόεδρος

Magyar (Hungarian)

Megfelelőségi nyilatkozat

1. Gyártó(k)
   a) Modell(ek) b) Modell(ek)
2. A műszaki fájl összeállításáért felelős jogi személy
3. Termék : Pantograph emelő
4. Funkció : Motoros járművek emelése
5. Modell
6. Típus
7. Alulírott, Mr. Ryoichi Hiraki a gyártók képviseletében ezennel kijelentem, hogy az alább leírt gép megfelel az alábbi rendeletek minden követelményének:
   - Az Európai Közösség 2006/42/EK irányelve a gépekről
8. Hivatkozások harmonizált szabványokra
9. Egyéb szabványok vagy specifikációk
10. Dátum
11. Aláírás
12. Név
13. Beosztás : Elnök

Italiano (Italian)

Dichiarazione di Conformità

1. Fabbricante/i
   a) Modello/i b) Modello/i
2. Persona giuridica autorizzata a compilare il fascicolo tecnico
3. Prodotto : Cric a pantografo
4. Funzione : Sollevamento di veicolo a motore
5. Modello
6. Tipo
7. Il sottoscritto, Ryoichi Hiraki, che rappresenta i produttori, dichiara con la presente che la macchina descritta qui sotto soddisfa tutti i requisiti pertinenti di:
   - Direttiva CE 2006/42/CE relativa alle macchine
8. Norme armonizzate di riferimento
9. Altre norme o specifiche
10. Data
11. Firma
12. Nome
13. Posizione : Presidente

Latviešu (Latvian)

Atbilstības deklarācija

1. Ražotājs(-i)
   a) Modelis(-ji) b) Modelis(-ji)
2. Juridiskā persona, kurai ir atļauts sagatavot tehnisko datni
3. Produkts : Pantogrāfa domkrats
4. Funkcija : Mehānisko transportlīdzekļu paceļšana
5. Modelis
6. Tips
7. Apakšā parakstījies Rioiši Hiraki (Ryoichi Hiraki), kas pārstāv ražotājus, ar šo dokumentu paziņo, kas turpmāk aprakstītā iekārta atbilst visiem paredzētajiem nosacījumiem:
   - EK Direktīva Nr. 2006/42/EK par mašīnām;
8. atsauces uz saskaņotajiem standartiem;
9. citi standarti vai specifikācijas.
10. Datums
11. Paraksts
12. Vārds
13. Amats : Prezidents

Lietuviškai (Lithuanian)

Atitikties deklaracija

1. Gamintojas (-ai):
   a) Modelis (-iai) b) Modelis (-iai)
2. Juridinis asmuo, įgaliotas ruošti techninį dokumentą
3. Gaminys : trapecinis domkratas
4. Funkcija : motorinių transporto priemonių kėlimas
5. Modelis
6. Tipas
7. Žemiau pasirašęs, P. Ryoichi Hiraki, atstovaujantis gamintojus, šiuo pareiškia, kad žemiau aprašyti įrenginiai atitinka visas susijusias šių teisės aktų nuostatas:
   - ES direktyva 2006/42/EB dėl mašinų
8. Nuorodos į harmonizuotus standartus
9. Kiti standartai arba specifikacijos
10. Data
11. Parašas
12. Vardas, pavardė
13. Pareigos : prezidentas

Polski (Polish)

Deklaracja zgodności

1. Producent/producenci:
   a) Model(e) b) Model(e)
2. Osoba prawna upoważniona do sporządzenia dokumentacji technicznej
3. Produkt : podnośnik trapezowy
4. Funkcja : podnoszenie pojazdów mechanicznych
5. Model
6. Typ
7. Niżej podpisany, reprezentujący producentów Ryoichi Hiraki niniejszym oświadcza, że opisane poniżej urządzenie spełnia wszystkie stosowne wymogi:
   - Dyrektywy maszynowej 2006/42/WE
8. Odniesienia do norm zharmonizowanych
9. Inne normy lub specyfikacje
10. Data
11. Podpis
12. Imię i nazwisko
13. Stanowisko : Prezes

Português (Portuguese)

Certificado de Conformidade

1. Fabricante/s
   a) Modelo/s b) Modelo/s
2. Pessoa legalmente autorizada a redigir a ficha técnica
3. Produto : Macaco Pantográfico
4. Função : elevar veículos a motor
5. Modelo
6. Tipo
7. O representante dos fabricantes, Sr. Ryoichi Hiraki, certifica pela presente que o equipamento aqui identificado está conforme e satisfaz todos os requisitos de acordo com:
   - A Diretiva CE 2006/42/CE no âmbito dos Equipamentos Mecânicos
8. Referências de normas aplicáveis
9. Outras normas ou especificações
10. Data
11. Assinatura
12. Nome
13. Encargo : O Diretor Geral

Română (Romanian)

Declarație de conformitate

1. Fabricant/Fabricanți
   a) Model/e b) Model/e
2. Persoana juridică autorizată să redacteze dosarul tehnic
3. Produs : Cric manual
4. Funcție : Ridicarea vehiculului motorizat
5. Model
6. Tip
7. Subsemnatul, dl. Ryoichi Hiraki, reprezentant al fabricanților, declar prin prezenta faptul că echipamentul tehnic descris mai jos respectă cerințele esențiale din:
   - Directiva CE 2006/42/CE privind echipamentele tehnice
8. Trimiteri la standardele armonizate
9. Alte standarde sau specificații
10. Data
11. Semnătura
12. Nume
13. Funcția : Președinte

Slovensky (Slovak)

Vyhlásenie o zhode

1. Výrobca/Výrobcovia:
   a) Model/Modely b) Model/Modely
2. Právnická osoba oprávnená vypracovať súbor technickej dokumentácie
3. Výrobok : Pantografický zdvihák
4. Funkcia : Zdvihanie motorového vozidla
5. Model
6. Typ
7. Dolu podpísaný zástupca výrobcov, pán Ryoichi Hiraki, týmto prehlasuje, že toto popísané strojné zariadenie spĺňa všetky príslušné ustanovenia:
   - smernice o strojoch a strojných zariadeniach č. 2006/42/ES.
8. Odkazy na harmonizované normy
9. Ďalšie technické normy alebo špecifikácie
10. Dátum
11. Podpis
12. Meno
13. Funkcia : prezident

Slovensko (Slovene)

Izjava o skladnosti

1. Proizvajalec/i
   a) Model/i b) Model/i
2. Pravna oseba pooblaščena za sestavljanje tehnične datoteke
3. Izdelek : Pantografska dvigalka
4. Namen : Dvigovanje motornega vozila
5. Model
6. Tip
7. Spodaj podpisani g. Ryoichi Hiraki, kot predstavnik proizvajalca s tem izjavlja, da spodaj opisana naprava izpolnjuje vse zahtevane predpise:
   - Direktivo ES 2006/42/ES o strojih
8. Sklicevanje na uskladjene standarde
9. Drugi standardi in specifikacije
10. Datum
11. Podpis
12. Ime
13. Položaj : Predsednik

Español (Spanish)

Declaración de conformidad

1. Fabricante(s)
   a) Modelo(s) b) Modelo(s)
2. Persona legalmente autorizada para constituir el expediente técnico
3. Producto : gato elevador de tijera
4. Función : elevación de vehículo de motor
5. Modelo
6. Tipo
7. El abajo firmante, Sr. Ryoichi Hiraki, en representación de los fabricantes, declara por la presente que la máquina que se describe a continuación cumple todas las disposiciones pertinentes de:
   - La Directiva europea 2006/42/CE relativa a las máquinas
8. Las referencias a las normas armonizadas
9. Otras normas o especificaciones
10. Fecha
11. Firma
12. Nombre
13. Cargo : Presidente

Svenska (Swedish)

Konformitetsförklaring

1. Tillverkare
   a) Modell/er b) Modell/er
2. Juridisk person som är behörig att fylla i den tekniska filen
3. Produkt : Pantografdomkraft
4. Funktion : Lyfta motorfordon
5. Modell
6. Typ
7. Undertecknade, Ryoichi Hiraki, som företräder tillverkarna, förklarar härmed att maskinen som beskrivs nedan uppfyller alla relevanta bestämmelser i:
   - EG-direktivet 2006/42/EG om maskiner
8. Referenser till harmoniserade standarder
9. Andra standarder eller specifikationer
10. Datum
11. Underskrift
12. Namn
13. Titel : VD

Türkçe (Turkish)

Uygunluk Beyanı

1. Üreticiler
   a) Modeller b) Modeller
2. Teknik dosyayı düzenlemeye yetkili tüzel kişi
3. Ürün : Kriko
4. İşlev : Motorlu araç kaldırma
5. Model
6. Tip
7. Üreticileri temsil eden ve aşağıda imzası bulunan Bay Ryoichi Hiraki iş bununla yukarıda tanımlanan makinenin,
   - AT 2006/42/EC Makine direktifinin tüm şartlarını karşıladığını beyan eder
8. Uyumlandırılmış standartlara olan referanslar
9. Diğer standart veya şartnameler
10. Tarih
11. İmza
12. Adı ve Soyadı
13. Konumu : Başkan

English

INSTRUCTION MANUAL

CE

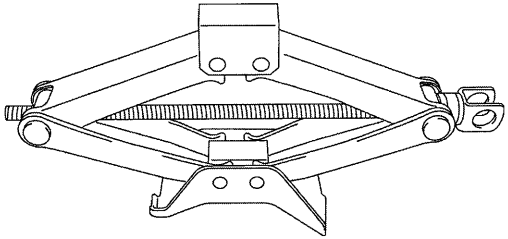

Manufacturers:

RIKENKAKI CO., LTD.
5-6-12 Chiyoda, Sakado-shi, Saitama, 350-0214 Japan
Tel: 049-248-1661
Fax:049-284-4340

CHANGZHOU RIKENSEIKO MACHINERY CO., LTD.
No. 1903 Zhongwu Ave. Zhonglou Changzhou, Jiangsu CHINA
Tel: 0519-327-5284
Fax:0519-327-0811

Please read this INSTRUCTION MANUAL before operation!

Norm: EN 1494:2000+A1:2008

Attention and warning

- Use jack only to change wheels.
- Use the JACK no more than 50 times.
- The JACK used only for replacing tyres, not for others purpose.
- No-loading person.
- Never get under vehicle raised by jack.
- Dangerously, using in aging.

Meaning of pictogram on caution label

This symbol indicates a potential hazard that could result in death or serious injury.

This symbol indicates you never get under the vehicle when it is supported by the jack.

Parts name of Pantograph Jack

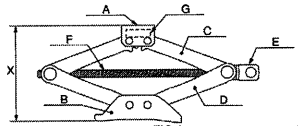

FIG 1

A : TOPHOLDER
B : BASE
C : UPPER ARM
D : LOWER ARM
E : HANDLE JOINT
F : JACK SCREW
G : NOMINAL LOAD (ton)
H_1: MINIMUM HEIGHT (mm)
H_2: MAXIMUM HEIGHT (mm)
H_3: PERFORMANCE ASSURANCE HEIGHT (mm)
X : JACK HEIGHT (mm)
Y : LOAD (ton)
M : MODEL
T : TYPE

Technical Data and Application

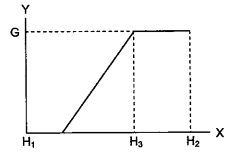

M	T	G	H_1	H_2	H_3
55L	Suzuki Type- I	0.95	89	327	208
72K	Suzuki Type- II	0.95	70	281	175.5
54L	Suzuki Type- III	0.95	80	318	199
81A	Suzuki Type- IV	1.0	85.5	344	214.75
77K	Suzuki Type- V	1.25	100.8	436.3	268.55

FIG 2

No-Using Conditions

- When temperature under -40℃.
- On miring or sand ground.
- On big gradient road.
- In extreme nature condition: rainstorm, typhoon, cyclone, snowstorm, thunder-storm, etc.
- Loading dangerous heavy, for instance: melted metal, acidity substance, radioactivity substance or specially crisp goods.
- Contact with hood directly.
- Using on boat.
- The ground with difference in level.

Operation instructions

Whenever a wheel is changed, always remove any corrosion that may be present on inside of wheel and wheel mounting surface on vehicle.

Details:

Please operate according to the "operation instructions".

Operate the jack on the level ground while checking the jack and the load.

Mustn't operate under raising load, unless the load is fastened surely.

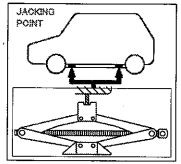

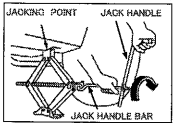

- Park the car on the flat, level ground and apply the brake firmly.
- Set transmission in "reverse"(automatic transmission in "park").
- Turn on the hazard warning flasher.
- Remove jacking tools and spare tire from stowage area.
- Block front and rear of wheel diagonally opposite wheel being removed before operating jack.
- Loosen, but do not remove wheel nuts by turning wrench counter clockwise.
- Raise jack until jack-head groove fits boss of frame see illustrations.
- Operate jack with slow, smooth motion, using jack handle.
- Raise vehicle so an inflated tire will just clear surface, remove nuts and wheel.
- Install wheel, then slightly tighten each nut, wheel must be seated on hub.
- Lower vehicle, and fully tighten wheel nuts in across-cross sequence by turning wrench clockwise.

Maintenance

- Please prevent the JACK SCREW from accretion of dirt.
- Please oil the JACK SCREW often.
- Check the nameplate, keep the shape same as original.

Details:

- Must, maintain according to the specification and act with professional.
- No-rejigger the jack's construction privately.

Български (Bulgarian)

РЪКОВОДСТВО ЗА ЕКСПЛОАТАЦИЯ

CE

Производител:

RIKENKAKI CO., LTD.
5-6-12 Chiyoda, Sakado-shi, Saitama, 350-0214 Япония
Тел: 049-248-1661
Факс:049-284-4340

CHANGZHOU RIKENSEIKO MACHINERY CO., LTD.
No. 1903 Zhongwu Ave. Zhonglou Changzhou, Jiangsu КИТАЙ
Тел: 0519-327-5284
Факс:0519-327-0811

Моля, прочетете това РЪКОВОДСТВО ЗА ЕКСПЛОАТАЦИЯ преди работа!

Стандарт: EN 1494:2000+A1:2008

Обозначения за повишено внимание и предупреждения

- Използвайте крика само за смяна на колелата.
- Използвайте КРИКА не повече от 50 пъти.
- КРИКЪТ да се използва само за смяна на колелата и за никакви други цели.
- Не повдигайте автомобил, в който се намират хора.
- Никога не влизайте под автомобил, повдигнат на крик.
- Използването на крика от възрастни хора е опасно.

Значение на пиктограмите на предупредителните етикети

Оранжев фон

Черно

Този символ означава потенциална опасност, която може да доведе до смърт или сериозно нараняване.

Бял фон

Черно

Черве

Този символ показва, че никога не трябва да влизате под автомобил, повдигнат на крик.

Наименования на частите на пантографен крик

Виж FIG. 1. на страницата на английски език

Технически характеристики и приложение

Виж FIG. 2. на страницата на английски език.

A : ГОРЕН ДЪРЖАЧ	F : ВИНТ НА КРИКА	X : ВИСОЧИНА НА КРИКА (мм)
B : ОСНОВА	G : НОМИНАЛЕН ПОДЕМЕН КАПАЦИТЕТ (тона)	Y : ПОДЕМЕН КАПАЦИТЕТ (тона)
C : ГОРНО РАМО	H_1 : МИНИМАЛНА ВИСОЧИНА (мм)	M : МОДЕЛ
D : ДОЛНО РАМО	H_2 : МАКСИМАЛНА ВИСОЧИНА (мм)	T : ТИП
E : РЪКОХВАТКА	H_3 : РАБОТНА ВИСОЧИНА НА КРИКА (мм)	

Условия, в които не трябва да се използва

- При температури под -40°C.
- Ввърху неустойчив или песъчлив терен.
- Ввърху наклонен път.
- В екстремни природни условия: пороен дъжд, тайфуни, циклони, силен снеговалеж, гръмотевична буря и др.
- Опасен товар, например: стопен метал, разяждащи киселинни или радиоактивни вещества или особено крехки товари.
- В пряк контакт с кулето.
- Използване на лодка.
- Върху наклонен терен с разлика в нивата.

Инструкции за работа

При смяна на колело винаги отстранявайте следите от корозия, натрупали се от вътрешната страна на джантата и монтажната повърхност на главината на колелото.

Информация:

Моля, работете в съответствие с "Инструкции за експлоатация". Поставете крика върху равна повърхност и следете както крика, така и товара.

Не работете под повдигания товар, освен ако товарът не е устойчиво закрепен.

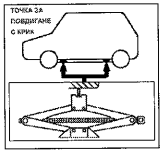

- Паркирайте автомобила на равна, хоризонтална повърхност и изтеглете докрай ръчната спирачка.
- Включете на „задна" предавка (при автоматични трансмисии, поставете в положение „Park").
- Включете предупредителните сигнални светлини.
- Извадете крика и принадлежностите му и резервната гума отмястото за съхранение.
- Преди да работите с крика, блокирайте предното и задно колело по диагонал и от противоположната страна на колелото, което ще сваляте.
- Разхлабете, без да развивате докрай, колесните гайки със завъртане на ключа обратно на часовника.
- Повдигнете крика, докато канала върху главата на крика обхване изпъкналата част на рамата – виж илюстрацията.
- Работете с крика с бавни, плавни движения, като използвате ръкохватката.
- Повдигнете автомобила, така че надутата гума едва да се отлепи от повърхността, след което развийте гайките и свалете колелото.
- Поставете колелото и леко завийте всяка от гайките, колелото трябва добре да лепне върху главината.
- Спуснете автомобила и затегнете докрай колесните гайки в последователност на кръст, като въртите ключа по часовника.

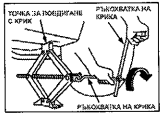

Поддръжка

- Не допускайте натрупване на замърсявания върху ВИНТА НА КРИКА .
- Редовно смазвайте ВИНТА НА КРИКА.
- Проверете данните върху табелката с технически характеристики, поддържайте крика в изправно състояние.

Информация:

- Да се поддържа в съответствие със спецификациите и от професионален техник.
- Не предприемайте опити сами да преправяте конструкцията на крика.

Hrvatski (Croatian)

UPUTE ZA UPORABU

CE

Proizvođači:

RIKENKAKI CO., LTD.
5-6-12 Chiyoda, Sakado-shi, Saitama, 350-0214 Japan
Tel: 049-248-1661
Faks:049-284-4340

CHANGZHOU RIKENSEIKO MACHINERY CO., LTD.
No. 1903 Zhongwu Ave. Zhonglou Changzhou, Jiangsu KINA
Tel: 0519-327-5284
Faks:0519-327-0811

Prije uporabe pročitati UPUTE ZA UPORABU!

Norma: EN 1494:2000+A1:2008

Obavijesti i upozorenja

- Dizalicu upotrebljavajte isključivo za zamjenu kotača.
- DIZALICU je dozvoljeno upotrijebiti najviše 50 puta.
- DIZALICU upotrebljavajte isključivo za zamjenu kotača. Ne upotrebljavajte je u druge svrhe.
- U vozilu se ne smiju nalaziti putnici.
- Nikada ne zalazite ispod vozila podignutog dizalicom.
- Zbog opasnosti dizalicu ne smiju upotrebljavati starije osobe.

Značenje piktograma na naljepnici upozorenja

Ovaj simbol označava potencijalnu opasnost od ozbiljnih ozljeda i smrti.

Ovaj simbol označava zabranu zalaženja ispod vozila podignutog dizalicom.

Nazivi dijelova pantografske dizalice

Vidi FIG. 1. na stranici na engleskom jeziku.

Tehnički podaci i primjena

Vidi FIG. 2. na stranici na engleskom jeziku.

A : NOSAČ	F : OPRUGA DIZALICE	X : VISINA DIZALICE (mm)
B : BAZA	G : NAZIVNA NOSIVOST (tona)	Y : NOSIVOST (tona)
C : GORNJI KRAK	H_1 : MINIMALNA VISINA (mm)	M : MODEL
D : DONJI KRAK	H_2 : MAKSIMALNA VISINA (mm)	T : TIP
E : ZGLOB ZA POLUGU	H_3 : OPTIMALNA VISINA (mm)	

Uvjeti u kojima je zabranjena uporaba dizalice

- Temperatura niža od -40°C.
- Klizavo i pjeskovito tlo.
- Cesta s velikim nagibom.
- Ekstremni vremenski uvjeti: pljusak, tajfun, ciklon, snježna mećava, grmljavinsko nevrijeme i sl.
- Vozila s opasnim i teškim teretom, primjerice: rastaljeni metal, kiseline, radioaktivne tvari ili osobito lomljiv teret.
- Izravan kontakt s poklopcem motora vozila.
- Na brodu.
- Neravno tlo.

Upute za rad

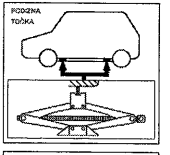

Kod zamjene kotača uvijek provjerite ima li na unutrašnjem dijelu kotača ili površini za postavljanje kotača ostataka korozije.
Dodatne upute:
Molimo vas da se pridržavate uputa za rad.
Nakon provjere dizalice i opterećenja dizalicu upotrijebite na ravnoj podlozi.
Vozilo ne smijete podizati ako je pod opterećenjem, osim ako teret nije stabiliziran.

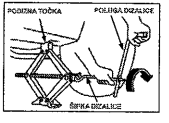

- Vozilo parkirajte na ravnoj površini i čvrsto pritegnite ručnu kočnicu.
- Mjenjač postavite u vožnju unatrag (vozila s automatskim prijenosom postavite u položaj za parkiranje).
- Upalite sva četiri pokazivača smjera.
- Iz prtljažnika izvadite alat za dizalicu i rezervni kotač.
- Prije uporabe dizalice blokirajte prednji i stražnji dio kotača koji se nalazi dijagonalno u odnosu na kotač koji mijenjate.
- Okretanjem francuskog ključa suprotno od kazaljke na satu olabavite vijke na kotaču, ali ih nemojte ukloniti.
- Podižite dizalicu dok udubina na nosaču ne legne u izbočinu podvozja, kako je prikazano na ilustraciji.
- Dizalicom upravljajte polaganim, ravnomjernim pokretima polugom.
- Vozilo podignite od tla tek toliko da probušena guma malo odstoji od tla pa uklonite vijke i kotač.
- Postavite kotač, a potom lagano pričvrstite vijke, kotač mora sjesti na glavčinu.
- Spustite vozilo pa do kraja zategnite vijke okretanjem francuskog ključa u smjeru kazaljke na satu.

Održavanje

- Sprječite nakupljanje prljavštine na OPRUZI DIZALICE.
- Redovito podmazujte OPRUGU DIZALICE.
- Provjerite nazivnu pločicu, mora zadržati svoj izvorni oblik.

Dodatne upute:

- Dizalicu obavezno održavajte i upotrebljavajte u skladu s uputama.
- Nemojte samostalno obavljati promjene na dizalici.

Česky (Czech)

NÁVOD K POUŽITÍ

CE

Výrobce:

RIKENKAKI CO., LTD.
5-6-12 Chiyoda, Sakado-shi, Saitama, 350-0214 Japonsko
Tel: 049-248-1661
Fax:049-284-4340

CHANGZHOU RIKENSEIKO MACHINERY CO., LTD.
No. 1903 Zhongwu Ave. Zhonglou Changzhou, Jiangsu ČÍNA
Tel: 0519-327-5284
Fax:0519-327-0811

Před zahájením činnosti si tento NÁVOD K POUŽITÍ pečlivě přečtěte!

Norma: EN 1494:2000+A1:2008

Upozornění a varování

- Zvedák používejte pouze k výměně kol.
- ZVEDÁK nepoužívejte více než padesátkrát.
- ZVEDÁK se používá pouze pro výměnu pneumatik, nikoli k jiným účelům.
- Nezvedejte osoby.
- Nikdy nevstupujte pod vozidlo zvednuté pouze zvedákem.
- Nebezpečí s postupujícím stářím výrobku.

Významy symbolů na štítku pro upozornění

Oranžové pozadí

Černý

Tento symbol označuje možné riziko, které by mohlo vést k úmrtí nebo vážnému zranění.

Bílé pozadí

Černý

Červe

Tento symbol označuje zákaz vstupování pod vozidlo podepřené zvedákem.

Názvy součástí zvedáku Pantograph

Viz FIG. 1 na anglické stránce

Technické údaje a použití

Viz FIG. 2 na anglické stránce.

A : HORNÍ DRŽÁK	F : ŠROUB ZVEDÁKU	X : VÝŠKA ZVEDÁKU (mm)
B : ZÁKLADNA	G : NOMINÁLNÍ ZATÍŽENÍ (tuna)	Y : ZATÍŽENÍ (tuna)
C : HORNÍ RAMENO	H_1 : MINIMÁLNÍ VÝŠKA (mm)	M : MODEL
D : DOLNÍ RAMENO	H_2 : MAXIMÁLNÍ VÝŠKA (mm)	T : TYP
E : DRŽADLO	H_3 : VÝŠKA PRO ZAJIŠTĚNÍ VÝKONNOSTI (mm)	

Podmínky, při nichž se výrobek nemá používat

- Při teplotě pod -40°C.
- Na štěrku nebo na písku.
- Na silnici s velkým sklonem.
- V extrémních přírodních podmínkách: bouře, tajfun, cyklon, sněhová bouře, bouře s deštěm atd.
- Zvedání nebezpečných nákladů, například: svařovaný kov, kyseliny, radioaktivní látky nebo speciální křehké zboží.
- Přímý kontakt s kapotou.
- Používání na lodi.
- Země s odlišnou výškou.

Provozní pokyny

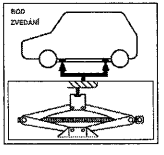

Při výměně kol vždy odstraňte korozi, která může být na vnitřku kola a povrchu pro upevnění kola na vozidle.
Podrobnosti:
Používejte podle „pokynů k použití".
Zvedák používejte na rovné zemi a kontrolujte zvedák i náklad.
Nevstupujte pod zvednutý náklad, pokud náklad není bezpečně upevněn.

- Zaparkujte vůz na rovné ploché zemi a zatáhněte parkovací brzdu.
- Zařaďte zpátečku (automatickou převodovku do stupně „park").
- Zapněte výstražná světla.
- Vyjměte zvedák a náhradní pneumatiku.
- Zajistěte přední a zadní kola úhlopříčně proti demontovanému kolu, než zvedák použijete.
- Matice kola povolte, ale nevyndávejte je - otočte klíčem doleva.
- Zvedněte zvedá, dokud se drážka nedostane do styku s rámem, viz obrázky.
- Používejte zvedák pomalu, plynule pomocí držadla.
- Zvedněte vozidlo tak, aby nahuštěná pneumatika byla těsně nad zemí, demontujte matice a kolo.
- Nainstalujte kolo, pak mírně utáhněte každou matici, kolo musí být nasazeno na náboji.
- Spusťte vozidlo a utáhněte matice křížem proti sobě, otáčejte klíčem doprava.

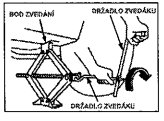

Údržba

- Zabraňte tomu, aby se na ŠROUBU ZVEDÁKU usadily nečistoty.
- Často olejujte ŠROUB ZVEDÁKU.
- Zkontrolujte jmenný štítek a tvar udržujte stejný jako původně.

Podrobnosti:

- Nutnost provádět údržbu podle zadání, kontaktujte odborníka.
- Neupravujte konstrukci zvedáku sami.

Dansk (Danish)

BRUGSANVISNING

CE

Fabrikanter:

RIKENKAKI CO., LTD.
5-6-12 Chiyoda, Sakado-shi, Saitama, 350-0214 Japan
Tel: 049-248-1661
Fax:049-284-4340

CHANGZHOU RIKENSEIKO MACHINERY CO., LTD.
No. 1903 Zhongwu Ave. Zhonglou Changzhou, Jiangsu CHINA
Tel: 0519-327-5284
Fax:0519-327-0811

Læs denne BRUGSANVISNING før brug!

Standard: EN 1494:2000+A1:2008

Advarsel

- Brug kun DONKRAFTEN til at skifte hjul.
- Brug ikke DONKRAFTEN flere end 50 gange.
- DONKRAFTEN må kun anvendes til at skifte hjul, ikke til andre formål.
- Løft aldrig mennesker.
- Kravl aldrig ind under et køretøj, der er løftet med en donkraft.
- Farlig at bruge for ældre og svagelige.

Betydning af piktogrammet på advarselsmærket

Dette symbol angiver en mulig fare, der kan medføre dødsfald eller alvorlig skade.

Dette symbol betyder, at du aldrig må kravle ind under et køretøj, der er løftet med donkraften.

Delenes betegnelse for Saksedonkraft

Se FIG 1 på den engelsksprogede side.

Tekniske data og anvendelse

Se FIG 2 på den engelsksprogede side.

A	: LØFTEBAKKE	F	: DONKRAFTENS SKRUE	X	: LØFTEHØJDE (mm)
B	: BASE	G	: NOMINEL LØFTEKAPACITET (ton)	Y	: BELASTNING (ton)
C	: ØVRE ARM	H_1	: MINIMUMSHØJDE (mm)	M	: MODEL
D	: NEDRE ARM	H_2	: MAKSIMUMSHØJDE (mm)	T	: TYPE
E	: HÅNDTAGETS LED	H_3	: HØJDE FOR SIKKER BETJENING (mm)		

Betingelser, hvor donkraften ikke må bruges

- Temperatur under -40 °C.
- På mudret eller sandet underlag.
- På stærkt hældende veje.
- Under ekstreme vejrforhold: kraftigt regnvejr, tyfon, cyklon, snestorm, tordenvejr mv.
- Tungt eller farligt gods, fx: smeltet metal, syrer, radioaktive stoffer eller særligt skrøbelige varer.
- Direkte kontakt med køretøjets understel.
- På et skib.
- På underlag med niveauforskelle.

Brugsanvisning

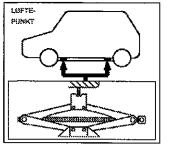

Når du skifter hjul, skal du altid fjerne eventuel rust, der måtte findes inde i hjulet eller på køretøjets hjulmonteringsoverflade.
Nærmere anvisninger:
Gå frem ifølge brugervejledningen.
Brug donkraften på et jævnt underlag, og hold øje med både donkraften og lasten.
Du må ikke foretage indgreb under en løftet last, med mindre lasten er gjort sikkert fast.

- Parker køretøjet på et fladt, jævnt underlag, og træk bremsen godt.
- Sæt gearkassen i bakgear (en automatisk gearkasse sættes på "parkering").
- Tænd katastrofeblinket.
- Tag donkraftens redskaber og reservehjulet ud af deres opbevaringsrum.
- Bloker foran og bag på det hjul, der sidder diagonalt i forhold til det hjul, der fjernes, inden donkraften bruges.
- Løsn hjulmøtrikkerne uden at fjerne dem ved at dreje skruenøglen mod uret.

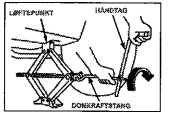

- Løft donkraften, indtil rillerne i donkraftens løftebakke passer til rammen - se illustrationerne.
- Betjen donkraften ved hjælp af donkraftens håndtag med langsomme, jævne bevægelser.
- Løft køretøjet, så et oppustet dæk netop vil være frit af underlaget. Fjern møtrikkerne, og tag hjulet af.
- Sæt det nye hjul på plads, og stram hver møtrik lidt. Hjulet skal sidde på et nav.
- Sænk køretøjet ned, og stram hjulmøtrikkerne fuldstændigt skiftevis i en overfor/diagonalt-sekvens ved at dreje skruenøglen med uret.

Vedligeholdelse

- Pas på at undgå, at DONKRAFTENS SKRUE samler snavs.
- Sørg for jævnligt at smøre DONKRAFTENS SKRUE med olie.
- Tjek typeskiltet. Bevar den originale form.

Nærmere anvisninger:

- Donkraften skal vedligeholdes professionelt og ifølge specifikationerne.
- Det er forbudt selv at foretage ændringer på donkraftens konstruktion.

Nederlands (Dutch)

GEBRUIKERSHANDLEIDING

CE

Fabrikanten:

RIKENKAKI CO., LTD.
5-6-12 Chiyoda, Sakado-shi, Saitama, 350-0214 Japan
Tel: 049-248-1661
Fax:049-284-4340

CHANGZHOU RIKENSEIKO MACHINERY CO., LTD.
No. 1903 Zhongwu Ave. Zhonglou Changzhou, Jiangsu CHINA
Tel: 0519-327-5284
Fax:0519-327-0811

Lees deze GEBRUIKERSHANDLEIDING voor gebruik!

Norm: EN 1494:2000+A1:2008

Let op en waarschuwing

- Gebruik de krik alleen om banden te verwisselen.
- Niet meer dan 50 maal gebruiken.
- De krik mag alleen voor het wisselen van banden gebruikt worden, niet voor andere doeleinden.
- Er mag niemand in de auto zitten.
- Ga nooit onder een voertuig dat door een krik is opgetild.
- De krik kan gevaarlijk zijn indien hij door oudere personen gebruikt wordt.

Betekenis van het pictogram op het waarschuwingslabel

Dit symbool geeft potentieel gevaar aan dat tot ernstig letsel of de dood kan leiden.

Dit symbool geeft aan dat u nooit onder een apparaat moet gaan dat door de krik opgetild is.

Naam van de onderdelen van de Schaarkrik

Zie FIG 1 op de Engelse pagina.

Technische gegevens en toepassing

Zie FIG 2 op de Engelse pagina.

A : BOVENKANT	F : KRIKSCHROEF	X : HOOGTE KRIK(mm)
B : BASIS	G : NOMINALE LADING (ton)	Y : LADING (ton)
C : BOVENARM	H_1 : MINIMUMHOOGTE (mm)	M : MODEL
D : ONDERARM	H_2 : MAXIMUMHOOGTE (mm)	T : TYPE
E : SCHARNIER VAN DE HENDEL	H_3 : WERKHOOGTE (mm)	

Niet gebruiken in de volgende gevallen

- Wanneer de temperatuur lager is dan -40°C.
- Op een gladde of zanderige ondergrond.
- Op een sterk hellende weg.
- Bij extreme weersomstandigheden: regen en storm, tyfoon, tornado, sneeuwstorm, onweer, etc.
- Voor het laden van gevaarlijke stoffen, bijv.: gesmolten metaal, zure stoffen, radioactieve stoffen en fragiele goederen.
- In direct contact met de motorkap.
- Op een boot.
- Op een onregelmatige ondergrond.

Gebruiksaanwijzing

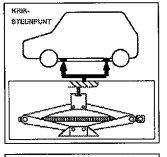

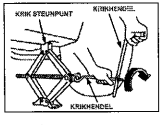

Als een wiel wordt gewisseld, verwijder dan altijd eerst corrosie die op de wiel of de wielas van het voertuig aanwezig is.
Details:
Volg de "gebruiksaanwijzing" nauwkeurig op.
Zet de krik op een stabiele ondergrond, controleer hem en controleer de lading.
Mag niet onder een stijgende lading worden gebruikt, tenzij de lading bevestigd is

- Parkeer de wagen op een vlakke, egale ondergrond en trek de handrem stevig aan.
- Zet de versnelling in de "achteruit" (automatische versnellingsbak in "parkeerstand").
- Zet het alarmknipperlicht aan.
- Neem het gereedschap en het reservewiel uit de daarvoor bestemde ruimte.
- Blokkeer de voor- en achterkant van het wiel dat tegenover het te verwijderen wiel ligt voordat u de krik gebruikt.
- Draai de moeren tegen de klok in los.
- Schroef de krik omhoog totdat de uitsparing in het kriksteunpunt past, zie illustraties.
- Bedien de krik met langzame, vloeiende bewegingen, met behulp van de hendel.
- Krik de auto zover op dat de opgeblazen band niet de ondergrond zal raken, verwijder de moeren en het wiel.
- Breng het andere wiel aan, schroef de moeren licht vast, het wiel moet op de wielas vastzitten.
- Laat de wagen zakken en draai de moeren kruiselings en klokgewijs geheel aan. .

Onderhoud

- Zorg ervoor dat de krik niet vuil wordt.
- Smeer de krik vaak.
- Check het naamplaatje, sla de krik in de oorspronkelijke vorm op.

Details:

- De krik moet naar behoren onderhouden worden.
- Demonteer de krik niet zelf.

Eesti (Estonian)

KASUTUSJUHEND

CE

Tootjad:

RIKENKAKI CO., LTD.
5-6-12 Chiyoda, Sakado-shi, Saitama, 350-0214 Jaapan
Tel: 049-248-1661
Faks: 049-284-4340

CHANGZHOU RIKENSEIKO MACHINERY CO., LTD.
Nr. 1903 Zhongwu Ave. Zhonglou Changzhou, Jiangsu HIINA
Tel: 0519-327-5284
Faks: 0519-327-0811

Palun lugege seda KASUTUSJUHENDIT enne kasutamist!

Norm: EN 1494:2000+A1:2008

Tähelepanu ja hoiatus

- Kasutage tungrauda ainult rataste vahetamiseks.
- Ärge kasutage TUNGRAUDA rohkem kui 50 korda.
- Ärge kasutage tungrauda muul eesmärgil kui rataste vahetamiseks või parandamiseks.
- Sõidukis ei tohi viibida inimesi.
- Ärge kunagi ronige tungrauaga tõstetud sõiduki alla.
- Pikaajaliselt kasutatud tungraua kasutamine on ohtlikum.

Piktogrammi tähendus hoiataval sildil.

See märk viitab võimalikule ohule, mis võib lõppeda tõsise vigastuse või surmaga.

See märk hoiatab, et tungraua kasutamise ajal ei tohi ronida sõiduki alla.

Pantograaf tungraua detailid

Vaadake ingliskeelselt lehelt FIG. 1

Tehniline info ja rakendamine

Vaadake ingliskeelselt lehelt FIG. 2

A : ÜLEMINE KINNITI	F : JÕUKRUVI	X : KRUVI KÕRGUS (mm)
B : ALUS	G : NOMINAALKOORMUS (tonn)	Y : KOORMUS (tonn)
C : ÜLEMINE ÕLG	H_1 : MINIMAALNE KÕRGUS (mm)	M : MUDEL
D : ALUMINE ÕLG	H_2 : MAKSIMAALNE KÕRGUS (mm)	T : TÜÜP
E : SANGA LIIGEND	H_3 : JÕUDLUSE TAGATUD KÕRGUS (mm)	

Kasutada ei tohi alljärgnevatel tingimustel:

- kui temperatuur on alla -40°C
- mudasel või liivasel pinnal
- kallakul
- äärmuslikes loodustingimustes: vihmasadu, talfuun, tsüklon, lumetorm, äikesetorm, jne
- ohtliku koorma korral, näiteks: sulatatud metall, happeline aine, radioaktiivne aine või kergesti purunevad kaubad
- otsene kontakt lükanduksega
- kasutamine paadis
- erineva kõrgusega põrandad.

Kasutamise juhised

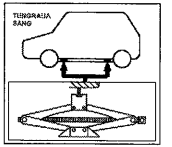

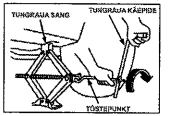

Igakordsel ratta vahetamisel tuleb alati eemaldada korrosioon, mida võib leiduda ratta siseküljel või sõidukil rattapaigalduse kohal.
Detaillid.
Palun kasutage seadet vastavalt „kasutamise juhistele".
Kasutage tungrauda horisontaalsel pinnal, kontrollides sõidukit ja tungrauda.
Kasutamine ei ole lubatud koorma tõstmisel, enne kui koorem ei ole kindlalt kinnitatud.

- Parkige sõiduk tasasel horisontaalsel pinnal ning tõmmake käsipidur kindlalt peale.
- Jätke sisse „tagurdamise käik" (automaatkäigukasti korral „parkimine").
- Lülitage sisse ohutuled.
- Võtke hoiupaigast tungraud ja selle juurde kuuluvad tööriistad ning tagavararatas.
- Vahetatava ratta suhtes diagonaalselt paiknevad esimene ja tagumine ratas tuleb tõkestada enne tungraua kasutamist.
- Keerates mutrivõtmega vastupäeva, lödvestage, kuid ärge eemaldage ratta mutreid.
- Tõstke tungrauda kõrguseni, kus tungrauapea renn sobitub juhtraamiga, vaata jooniseid.
- Kasutage tungrauda aeglaste, ühtlaste liigutustega, kasutades tungraua käepidet.
- Tõstke sõidukit kuni vahetatav ratas on maast lahti, eemaldage mutrid ja ratas.
- Paigaldage ratas, siis pingutage kergelt iga mutrit, ratas peab sobituma rattarummule.
- Laske sõiduk alla ja pingutage mutrid tugevalt risti üle ühe, keerates mutrivõtit päripäeva.

Hooldus

- Palun vältige TUNGRAUA KRUVI määrdumist.
- Palun õlitage TUNGRAUA KRUVI sageli.
- Kontrollige andmeplaati, säilitage originaalvorm.

Detaillid:

- Hooldus vastavalt spetsifikatsioonile ja spetsialisti poolt.
- Mitte muuta iseseisvalt tungraua konstruktsiooni.

Suomi (Finnish)

KÄYTTÖOHJE

CE

Valmistajat:

RIKENKAKI CO., LTD.
5-6-12 Chiyoda, Sakado-shi, Saitama, 350-0214 Japan
Puh.: 049-248-1661
Faksi: 049-284-4340

CHANGZHOU RIKENSEIKO MACHINERY CO., LTD.
No. 1903 Zhongwu Ave. Zhonglou Changzhou, Jiangsu CHINA
Puh.: 0519-327-5284
Faksi: 0519-327-0811

Lue tämä KÄYTTÖOHJE ennen käyttöä!

Standardi: EN 1494:2000+A1:2008

Huomautukset ja varoitukset

- Käytä tunkkia vain pyörien vaihtoon.
- Käytä TUNKKIA alle 50 kertaa.
- TUNKKIA käytetään vain renkaiden vaihtoon, ei mihinkään muuhun tarkoitukseen.
- Ei saa käyttää henkilöiden nostoon.
- Älä koskaan mene pelkän tunkin varassa olevan auton alle.
- Vaarallinen esim. vanhusten, sairaiden jne. käsissä.

Varotuskuvakkeiden merkitys

Osoittaa mahdollista vaaratilannetta, joka voi johtaa kuolemaan tai vakavaan loukkaantumiseen.

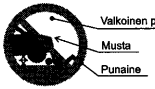

Osoittaa kieltoa mennä auton alle, kun se on pelkän tunkin varassa.

Saksitunkin osat

Katso FIG. 1 englanninkieliseltä sivulta.

Tekniset tiedot ja käyttö

Katso FIG. 2 englanninkieliseltä sivulta.

A : NOSTIN	F : SÄÄTÖRUUVI	X : TUNKIN KORKEUS (mm)
B : ALUSTA	G : NIMELLINEN NOSTOKYKY (t)	Y : NOSTOVOIMA (t)
C : YLÄVARSI	H_1 : ALIN KORKEUS (mm)	M : MALLI
D : ALAVARSI	H_2 : YLIN KORKEUS (mm)	T : TYYPPI
E : KAMMEN PAIKKA	H_3 : NOSTOKORKEUS (mm)	

Ei saa käyttää seuraavissa tapauksissa

- Kun lämpötila on alle -40 °C.
- Lieju- tai hiekkamaastossa.
- Jyrkällä mäellä.
- Äärimmäisissä ilmasto-olosuhteissa: sademyrsky, pyörremyrsky (sykloni, taifuuni), lumimyrsky, ukonilma jne.
- Vaarallisten raskaiden lastien kuljetuksessa, kuten: sulametalli, happamat aineet, radioaktiiviset aineet tai eritoten irtotavarat.
- Suorassa kosketuksessa koriin.
- Laivalla, veneellä jne.
- Epätasaisella maaperällä.

Käyttöohjeet

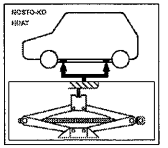

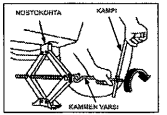

Kun pyörä vaihdetaan, puhdista aina ruoste, jota voi olla pyörän sisäpinnoilla ja pyörän asennuspinnalla autossa.
Yksityiskohdat:
Toimi "käyttöohjeiden" mukaisesti.
Käsittele tunkkia tasaisella maaperällä, kun tarkistat sitä ja kuormaa.
Älä työskentele ylös nostetun kuorman alla, ellei sitä ole tuettu varmalla tavalla.

- Pysäköi auto tasaiselle, vaakasuoralle pinnalle ja kiristä jarru.
- Kytke vaihteisto peruutusvaihteelle (automaattivaihteistossa pysäköintiasentoon).
- Sytytä varoitusvalot.
- Ota nostotyökalut ja varapyörä esille.
- Aseta kiilat vaihdettavaa pyörää vinosti vastapäätä olevan pyörän eteen ja taakse ennen kuin käytät tunkkia.
- Löysää pyöränmutterit (älä poista niitä) kääntämällä avainta vastapäivään.
- Nosta tunkkia, kunnes tunkin päässä oleva ura asettuu auton runkorakenteessa olevaan kohoumaan (katso kuvista).
- Nosta tunkkia hitaasti ja tasaisesti kampea käyttäen.
- Nosta autoa, kunnes rengas nousee irti maasta ja irrota mutterit ja pyörä.
- Asenna varapyörä ja kiristä mutterit kevyesti. Pyörän on oltava hyvin napakeskiöilä.
- Laske auto alas ja kiristä pyöränmutterit kunnolla ristiin, myötäpäivään.

Huolto

- Pidä TUNKIN SÄÄTÖRUUVI puhtaana.
- Käsittele TUNKIN SÄÄTÖRUUVI öljyllä usein.
- Tarkista nimikilpi. pidä se alkuperäisessä kunnossa.

Yksityiskohdat:

- Huolto on tehtävä annettujen spesifikaatioiden mukaisesti ja ammattitaidolla.
- Tunkkiin ei saa tehdä rakennemuutoksia itse.

Français (French)

MANUEL D'UTILISATION

CE

Fabricants :

RIKENKAKI CO., LTD.
5-6-12 Chiyoda, Sakado-shi, Saitama, 350-0214 Japon
Tél : 049-248-1661
Fax : 049-284-4340

CHANGZHOU RIKENSEIKO MACHINERY CO., LTD.
No. 1903 Zhongwu Ave. Zhonglou Changzhou, Jiangsu CHINE
Tél : 0519-327-5284
Fax : 0519-327-0811

Lire attentivement le présent MANUEL D'INSTRUCTION avant toute utilisation !

Norme : EN 1494:2000+A1:2008

Attention et avertissement

- L'utilisation du cric est réservée au changement de roues.
- Ne pas utiliser le CRIC plus de 50 fois.
- L'utilisation du CRIC est exclusivement réservée au remplacement de roues.
- Ne pas utiliser le cric lorsqu'une personne est dans le véhicule.
- Ne jamais se glisser sous le véhicule mis sur cric.
- L'utilisation par des personnes âgées est dangereuse.

Signification des pictogrammes sur l'étiquette d'avertissement

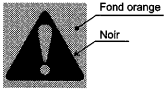

Ce symbole indique un danger potentiel pouvant causer des blessures ou un décès.

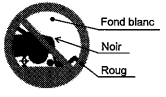

Ce symbole indique de ne jamais se glisser sous le véhicule lorsqu'il est monté sur cric.

Désignation des pièces du cric à parallélogramme

Voir FIG 1. du document anglais.

Données techniques et application

Voir FIG 2. du document anglais.

A : PLATEFORME DE SUPPORT CHARGE	F : CRIC À VIS	X : HAUTEUR CRIC (mm)
B : EMBASE	G : CHARGE NOMINALE (tonne)	Y : CHARGE (tonne)
C : BRAS SUPÉRIEUR	H_1 : HAUTEUR MINIMALE (mm)	M : MODÈLE
D : BRAS INFÉRIEUR	H_2 : HAUTEUR MAXIMALE (mm)	T : TYPE
E : LEVIER D'ARTICULATION	H_3 : HAUTEUR OPTIMALE (mm)	

Utilisation interdite dans les conditions suivantes

- Lorsque la température est inférieure à -40° C.
- Sur sol boueux ou sablonneux.
- Sur une forte pente.
- Dans des conditions naturelles extrêmes : tempête, typhon, cyclone, tempête de neige, orage, etc.
- En cas de chargement lourd ou dangereux, par exemple : métal en fusion, substance acide, substance radioactive ou marchandises particulièrement friables.
- Contact direct avec le capot.
- Utilisation sur un bateau.
- Sur un sol irrégulier.

Instructions d'utilisation

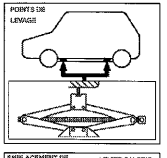

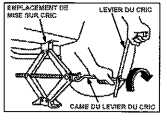

Lors du remplacement d'une roue, toujours éliminer toute corrosion détectée à l'intérieur de la roue et sur la surface d'installation de la roue sur le véhicule.
Remarques :
Respecter les "instructions d'utilisation".
Utiliser le cric sur un sol plat sans oublier de contrôler le cric et la charge.
Ne pas utiliser le cric en cas de charge supplémentaire, sauf si la charge est correctement fixée.

- Garer la voiture sur un sol plat et mettre correctement le frein à main.
- Mettre la boîte de vitesses sur marche arrière (sur "parking" sur une boîte automatique).
- Allumer les feux de détresse.
- Sortir les outils du cric et la roue de rechange du compartiment de stockage.
- Mettre des cales à l'avant et à l'arrière de la roue opposée en diagonale à la roue à changer avant d'utiliser le cric.
- Desserrer, mais ne pas retirer les écrous en tournant la clé dans le sens antihoraire.
- Monter le cric jusqu'à ce que la tête dentelée du cric entre en contact avec la partie du châssis prévue à cet effet. Voir illustrations.
- Actionner le cric avec des mouvements lents et fluides, à l'aide du levier.
- Soulever le véhicule de sorte qu'un pneu gonflé frôle juste le sol, déposer les écrous et la roue.
- Installer la roue, puis resserrer légèrement chaque écrou, la roue doit reposer sur l'essieu.
- Descendre le véhicule et serrer complètement les écrous en étoile (en serrant un à un les écrous opposés) en tournant la clé dans le sens horaire.

Maintenance

- Éviter toute accumulation de saleté sur le CRIC À VIS.
- Lubrifier régulièrement le CRIC À VIS.
- Vérifier la plaque signalétique, s'assurer que la forme est restée inchangée.

Remarques :

- Assurer impérativement la maintenance conformément aux spécifications et avec professionnalisme.
- Ne pas modifier la structure du cric.

Deutsch (German)

BEDIENUNGSANLEITUNG

CE

Hersteller:

RIKENKAKI CO., LTD.
5-6-12 Chiyoda, Sakado-shi, Saitama, 350-0214 Japan
Tel: 049-248-1661
Fax:049-284-4340

CHANGZHOU RIKENSEIKO MACHINERY CO., LTD.
No. 1903 Zhongwu Ave. Zhonglou Changzhou, Jiangsu CHINA
Tel: 0519-327-5284
Fax:0519-327-0811

Bitte lesen Sie diese BEDIENUNGSANLEITUNG vor Gebrauch!

Norm: EN 1494:2000+A1:2008

Achtung und Warnung

- Verwenden Sie den Wagenheber nur, um Reifen zu wechseln.
- Verwenden Sie den JACK nicht öfter als 50-mal.
- Der WAGENHEBER darf nur für den Reifenwechsel verwendet werden, nicht für andere Zwecke.
- Keine Personen befördern.
- Begeben Sie sich niemals unter ein Fahrzeug in angehobener Position.
- Der Einsatz von veralteten Wagenhebern ist gefährlich.

Bedeutung der Piktogramme auf dem Warnschild

Dieses Symbol weist auf eine mögliche Gefahr hin, die zum Tode oder schweren Verletzungen führen kann.

Dieses Symbol weist darauf hin, dass Sie sich niemals unter das Fahrzeug begeben dürfen, wenn es angehoben ist.

Teilename Scherenwagenheber

Siehe FIG. 1 auf der englischen Seite.

Technische Daten und Anwendung

Siehe FIG. 2 auf der englischen Seite.

A : OBENHALTERUNG	F : HUBSPINDEL	X : HUBHÖHE (mm)
B : BASIS	G : NENNLAST (t)	Y : LAST (t)
C : OBERER ARM	H_1 : MINDESTHÖHE (mm)	M : MODELL
D : UNTERER ARM	H_2 : MAXIMALE HÖHE (mm)	T : TYP
E : GRIFFGELENK	H_3 : LEISTUNGSGARANTIE HÖHE (mm)	

Nicht unter folgenden Bedingungen verwenden

- Bei Temperaturen unter -40°C.
- Auf Schmutz oder Sandboden.
- Straßen mit starker Neigung.
- Extreme Wetterbedingungen: Regensturm, Taifun, Zyklon, Schneesturm, Gewitter, usw.
- Laden von gefährlichen schweren Materialien, z.B.: geschmolzenes Metall, säurehaltige Substanz, radioaktiven Substanzen oder besonders körnige Waren.
- Direkter Kontakt mit der Motorhaube.
- Verwendung auf einem Boot.
- Unebener Boden.

Bedienungsanleitung

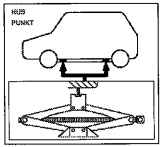

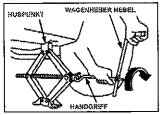

Wenn ein Reifen gewechselt wird, entfernen Sie immer den Rost, der sich innen am Rad und an der Montagefläche am Fahrzeug befinden kann.
Details:
Bitte gemäß "Bedienungsanleitung" verwenden.
Verwenden Sie den Wagenheber auf ebenem Boden und prüfen den Hub und die Last.
Nicht unter angehobener Last verwenden, es sei denn die Last ist sicher befestigt.

- Parken Sie das Auto auf einem flachen, ebenen Boden und ziehen die Bremse fest an.
- Legen Sie den Rückwärtsgang ein (Automatikgetriebe in "Park" Stellung).
- Stellen sie die Warnblinkanlage ein.
- Holen Sie den Wagenheber und den Ersatzreifen aus dem Stauraum.
- Blockieren Sie vor Verwendung des Wagenhebers die Vorder- und Hinterräder, die sich diagonal gegenüberliegen.
- Lösen Sie die Radmuttern durch Drehen des Schraubschlüssels gegen den Uhrzeigersinn, aber entfernen Sie die Muttern nicht.
- Heben Sie den Wagenheber, bis die Nut des Wagenheberkopfs in den Bolzenrahmen passt, s. Abb.
- Bedienen Sie den Wagenheber mit langsamer, ruhiger Bewegung mit dem Hebel.
- Heben Sie das Fahrzeug so an, dass ein aufgepumpter Reifen sich soeben vom Boden abhebt, entfernen Sie Muttern und Rad.
- Installieren Sie das Rad, ziehen leicht jede Mutter fest, das Rad muss auf der Nabe sitzen.
- Senken Sie das Fahrzeug und ziehen die Radmuttern in kreuzweiser Reihenfolge durch Drehen des Schraubenschlüssels im Uhrzeigersinn fest.

Wartung

- Bitte schützen Sie die HUBSPINDEL vor Schmutzansammlung.
- Bitte schmieren Sie die HUBSPINDEL oft.
- Prüfen Sie das Typenschild, Originalformat bewahren.
  Details:
- Gemäß Spezifikation durch einen Fachmann warten lassen.
- Die Konstruktion des Wagenhebers nicht selbst verändern.

Ελληνικά (Greek)

ΕΓΧΕΙΡΙΔΙΟ ΟΔΗΓΙΩΝ ΧΡΗΣΗΣ

CE

Κατασκευαστές:

RIKENKAKI CO., LTD.
5-6-12 Chiyoda, Sakado-shi, Saitama, 350-0214 Ιαπωνία
Τηλ.: 049-248-1661
Φαξ: 049-284-4340

CHANGZHOU RIKENSEIKO MACHINERY CO., LTD.
No. 1903 Zhongwu Ave. Zhonglou Changzhou, Jiangsu KINA
Τηλ.: 0519-327-5284
Φαξ: 0519-327-0811

Διαβάστε αυτό το ΕΓΧΕΙΡΙΔΙΟ ΧΡΗΣΗΣ προσεκτικά πριν από τη χρήση.

Πρότυπο: EN 1494:2000+A1:2008

Προσοχή και προειδοποίηση

- Να χρησιμοποιείτε τον γρύλο μόνο για την αλλαγή τροχών.
- Μην χρησιμοποιείτε τον ΓΡΥΛΟ παρατάνω από 50 φορές.
- Ο ΓΡΥΛΟΣ χρησιμοποιείται μόνο για την αντικατάσταση τροχών.
- Μην ανυψώνετε το όχημα με άτομο μέσα σε αυτό.
- Δεν πρέπει ποτέ να βρίσκεστε κάτω από το όχημα που έχει ανυψωθεί με γρύλο.
- Η χρήση του είναι επικίνδυνη όταν βρίσκεστε σε μεγάλη ηλικία.

Σημασία εικονογράμματος σε ετικέτα προφύλαξης

Το σύμβολο υποδεικνύει ότι πρόκειται για δυνητικό κίνδυνο, ο οποίος θα μπορούσε να προκαλέσει θάνατο ή σοβαρό τραυματισμό.

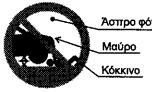

Το σύμβολο υποδεικνύει ότι δεν πρέπει ποτέ να βρίσκεστε κάτω από το όχημα όταν αυτό στηρίζεται στον γρύλο.

Ονόματα εξαρτημάτων του γρύλου παντογράφου

Ανατρέξτε στο FIG. 1 στην αγγλική σελίδα.

Τεχνικά δεδομένα και εφαρμογή

Ανατρέξτε στο FIG. 2 στην αγγλική σελίδα.

A	: ΒΑΣΗ ΚΟΡΥΦΗΣ	F	: ΚΟΧΛΙΑΣ ΓΡΥΛΟΥ	X	: ΥΨΟΣ ΑΠΟ ΤΟ ΕΔΑΦΟΣ (mm)
B	: ΒΑΣΗ	G	: ΟΝΟΜΑΣΤΙΚΟ ΦΟΡΤΙΟ (ton)	Y	: ΦΟΡΤΙΟ (ton)
C	: ΑΝΩ ΒΡΑΧΙΟΝΑΣ	H_1	: ΕΛΑΧΙΣΤΟ ΥΨΟΣ (mm)	M	: ΜΟΝΤΕΛΟ
D	: ΚΑΤΩ ΒΡΑΧΙΟΝΑΣ	H_2	: ΜΕΓΙΣΤΟ ΥΨΟΣ (mm)	T	: ΤΥΠΟΣ
E	: ΣΥΝΔΕΣΜΟΣ ΧΕΙΡΟΛΑΒΗΣ	H_3	: ΥΨΟΣ ΔΙΑΣΦΑΛΙΣΗΣ ΑΠΟΔΟΣΗΣ (mm)		

Συνθήκες απαγόρευσης χρήσης

- Όταν η θερμοκρασία είναι χαμηλότερη από -40°C.
- Σε λασπωμένο ή αμμώδες έδαφος.
- Σε δρόμο με μεγάλη κλίση.
- Σε ακραίες καιρικές συνθήκες: καταιγίδα, τυφώνας, κυκλώνας, χιονοθύελλα, καταιγίδα με κεραυνούς, κ.λπ.
- Όταν το φορτίο περιλαμβάνει επικίνδυνα αντικείμενα ή ουσίες, για παράδειγμα: λιωμένο μέταλλο, όξινη ουσία, ραδιενεργή ουσία ή ιδιαίτερα κοφτερά αντικείμενα.
- Όταν βρίσκεται σε άμεση επαφή με το κατιό.
- Όταν χρησιμοποιείται σε βάρκα.
- Σε έδαφος που παρουσιάζει διαφορές στο ύψος.

Οδηγίες χρήσης

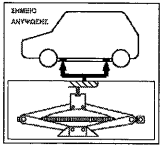

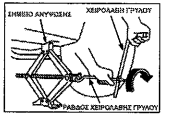

Όποτε αλλάζετε τροχό, απομακρύνετε πάντα οποιαδήποτε διάβρωση υπάρχει στο εσωτερικό του τροχού και στην επιφάνεια σκελετού του τροχού του οχήματος.

Λεπτομέρειες:

Να χρησιμοποιείτε τον γρύλο σύμφωνα με τις «Οδηγίες χρήσης».

Να χρησιμοποιείτε τον γρύλο σε επίπεδο έδαφος κατά τον έλεγχο του γρύλου και του φορτίου.

Απαγορεύεται η χρήση του κάτω από ανυψωμένο φορτίο, το οποίο δεν έχει δεθεί ασφαλώς.

- Σταθμεύστε το αυτοκίνητο σε ίσιο, επίπεδο έδαφος και τραβήξτε το χειρόφρενο γερά.
- Ρυθμίστε το κιβώτιο ταχυτήτων στην «όπισθεν» (σε αυτόματο κιβώτιο ταχυτήτων στη κατάθλιψη»).
- Ανάψτε τα φώτα κινδύνου.
- Απομακρύνετε τα εργαλεία ανύψωσης και τον επιπλέον τροχό από την περιοχή αποθήκευσης.
- Πριν τη χρήση του τροχού, κλείστε το μπροστινό και οπίσθιο μέρος του τροχού διαγωνίως απέναντι από τον τροχό που θα αλλαχθεί.
- Χαλαρώστε, αλλά μην απομακρύνετε τα περικόχλια γυρίζοντας το κλειδί αριστερόστροφα.
- Σηκώστε τον γρύλο μέχρι η εσοχή της κεφαλής του γρύλου να εφαρμόσει με την εγκοπή του σκελετού (δείτε εικόνες).
- Χρησιμοποιήστε τον γρύλο με αργή, απαλή κίνηση με τη βοήθεια της χειρολαβής.
- Ανυψώστε το όχημα ώστε να υπάρχει χώρος για την τοποθέτηση του φουσκωμένου ελαστικού, αφαιρέστε τα περικόχλια και τον τροχό.
- Εγκαταστήστε τον τροχό και μετά σφίξτε ελαφρά κάθε περικόχλιο έτσι ώστε κάθε τροχός να τοποθετηθεί στην πλήμνη.
- Χαμηλώστε το όχημα και σφίξτε πλήρως τα περικόχλια σε κατά μήκος διασταυρούμενη ακολουθία γυρίζοντας το κλειδί δεξιόστροφα.

Συντήρηση

- Προφυλάξτε τον κοχλία του γρύλου από συγκέντρωση ακαθαρσιών.
- Να λαδώνετε συχνά τον ΚΟΧΛΙΑ ΤΟΥ ΓΡΥΛΟΥ.
- Να ελέγχετε την πινακίδα και να διατηρείτε το σχήμα στην αρχική του μορφή.

Λεπτομέρειες:

- Η συντήρηση πρέπει να γίνεται σύμφωνα με τις προδιαγραφές και από επαγγελματία.
- Απαγορεύεται η επαναρρύθμιση της κατασκευής του γρύλου από την πλευρά σας.

Magyar (Hungarian)

HASZNÁLATI ÚTMUTATÓ

CE

Gyártók:

RIKENKAKI CO., LTD.
5-6-12 Chiyoda, Sakado-shi, Saitama, 350-0214 Japán
Tel.: 049-248-1661
Fax: 049-284-4340

CHANGZHOU RIKENSEIKO MACHINERY CO., LTD.
No. 1903 Zhongwu Ave. Zhonglou Changzhou, Jiangsu KÍNA
Tel.: 0519-327-5284
Fax: 0519-327-0811

Kérjük, a működtetés előtt olvassa el ezt a HASZNÁLATI ÚTMUTATÓT!

Szabvány: EN 1494:2000+A1:2008

Figyelemfelhívás és figyelmeztetés

- Az emelőt kizárólag kerékcserére használja.
- Az EMELŐT ne használja több mint 50 alkalommal.
- Az EMELŐT csakis abroncscserére szabad használni, más célra nem.
- Ne emelje meg személyel együtt.
- Soha ne másszon az emelővel megemelt jármű alá.
- Veszélyes a használata, ha elhasználódott.

A figyelmeztető címkén lévő piktogram jelentése

Ez a szimbólum olyan lehetséges veszélyt jelez, amely halálhoz vagy súlyos sérüléshez vezethet.

Ez a szimbólum azt jelzi, hogy soha ne másszon be a jármű alá, amikor azt az emelő tartja meg.

A pantográfos emelő alkatrészeinek neve

Lásd az FIG 1 az angol nyelvű oldalon.

Műszaki adatok és alkalmazás

Lásd az FIG 1 az angol nyelvű oldalon.

A : FELSŐ TARTÓ	F : EMELŐCSAVAR	X : EMELÉSI MAGASSÁG (mm)
B : ALAP	G : NÉVLEGES TERHELÉS (tonna)	Y : TERHELÉS (tonna)
C : FELSŐ KAR	H_1 : MINIMUM MAGASSÁG (mm)	M : MODELL
D : ALSÓ KAR	H_2 : MAXIMUM MAGASSÁG (mm)	T : TÍPUS
E : FOGANTYÚ CSUKLÓ	H_3 : A TELJESÍTŐKÉPESSÉGET BIZTOSÍTÓ MAGASSÁG (mm)	

A használatot kizáró körülmények

- -40°C alatti hőmérséklet.
- Ingoványos vagy homokos talaj.
- Erősen emelkedő út.
- Szélsőséges természeti körülmények: vihar, tájfun, ciklon, hóvihar, villámlással járó vihar stb.
- Veszélyes, nehéz rakomány, például: olvasztott fém, savas anyag, radioaktív anyag vagy határozottan törékeny termékek.
- Közvetlen érintkezés a motorháztetővel.
- Hajón való használat.
- Egyenetlen talaj.

Használati utasítások

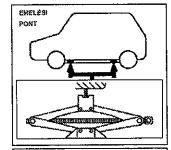

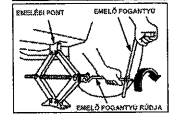

Valahányszor kereket cserél, mindig távolítsa el a korróziót, ami a kerék belsejében és a kerék járműre szerelendő felületén található.
Részletek:
Kérjük, a "használati utasításoknak" megfelelően működtesse.
Az emelőt egyenes talajon működtesse, ellenőrizve az emelőt és a terhelést.
Ne működtesse rakománnyal együtt, hacsak a rakomány nincs biztonságosan rögzítve.

- Parkolja az autót sima, egyenes talajra, és húzza be a féket szorosan.
- Állítsa a váltót "hátramenetbe" (az automata váltót "parkoló" állásba).
- Kapcsolja be a vészvillogót.
- Vegye elő az emelőszerszámokat és a pótkereket a rakodótérből.
- Az emelő működtetése előtt blokkolja előlről és hátulról az eltávolítandó kerékkel átellenes kereket.
- A kulcsot az óramutató járásával ellentétes irányba fordítva lazítsa ki, de ne távolítsa el a kerékanyákat.
- Emelje meg az emelőt, amíg az emelőfej vájatai el nem érik a váz munkalécét, lásd ábrák.
- Az emelőt lassú, sima mozdulatokkal működtesse, az emelő fogantyú segítségével.
- Emelje fel a járművet éppen annyira, hogy egy felfújt abroncs épp csak a talaj fölé emelkedjen, távolítsa el az anyákat és a kereket.
- Szerelje fel a kereket, utána enyhén szorítsa meg az összes anyát; a keréknek az agyra kell illeszkednie.
- Eressze le a járművet, majd teljesen szorítsa meg a kerékanyákat keresztirányban haladva, a kulcs óramutató járása szerinti irányba fordításával.

Karbantartás

- Kérjük, akadályozza meg, hogy az EMELŐCSAVARBAN kosz halmozódjon fel.
- Kérjük, olajozza meg gyakran az EMELŐCSAVART.
- Ellenőrizze az adattáblát, őrizze meg az eredeti alakját.

Részletek:

- A karbantartást a karbantartási utasításoknak megfelelően végezze el.
- Ne szerelje szét az emelő szerkezetét.

Italiano (Italian)

MANUALE D'ISTRUZIONI

CE

Fabbricanti:

RIKENKAKI CO., LTD.
5-6-12 Chiyoda, Sakado-shi, Saitama, 350-0214 Giappone
Tel: 049-248-1661
Fax:049-284-4340

CHANGZHOU RIKENSEIKO MACHINERY CO., LTD.
No. 1903 Zhongwu Ave. Zhonglou Changzhou, Jiangsu CINA
Tel: 0519-327-5284
Fax:0519-327-0811

Leggere il presente MANUALE D'ISTRUZIONI prima di utilizzare il prodotto!

Norma: EN 1494:2000+A1:2008

Avvertenze di sicurezza

- Utilizzare il cric solo per sostituire le ruote.
- Utilizzare il CRIC non più di 50 volte.
- Il CRIC va utilizzato solo per sostituire gli pneumatici, non per altri scopi.
- Non sollevare persone.
- Non infilarsi mai sotto un veicolo sollevato con il crick.
- Pericolo se utilizzato da persone anziane.

Significato del pittogrammi delle etichette di avvertenza

Questo simbolo indica un potenziale pericolo che può causare la morte o gravi lesioni.

Questo simbolo indica che non si deve mai infilarsi sotto il veicolo quando è sollevato con il cric.

Nome dei componenti del Cric a pantografo

Vedi FIG 1 pagina in inglese.

Dati tecnici e applicazione

Vedi FIG 2 pagina in inglese.

A : SUPPORTO	F : VITE CRIC	X : ALTEZZA CRIC (mm)
B : BASE	G : PORTATA NOMINALE (t)	Y : PORTATA (t)
C : BRACCIO SUP.	H_1 : ALTEZZA MIN (mm)	M : MODELLO
D : BRACCIO INF.	H_2 : ALTEZZA MAX (mm)	T : TIPO
E : GIUNTO MANOVELLA	H_3 : ALTEZZA DI PRESTAZIONE GARANTITA (mm)	

Condizioni di non utilizzo

- Temperature inferiori a -40 °C.
- Su terreno sabbioso o fangoso.
- Su strada con elevata pendenza.
- In condizioni climatiche estreme: temporali, tifoni, cicloni, bufere di neve, tempeste, etc.
- Sollevamento di oggetti molto pericolosi, ad esempio: metallo fuso, sostanze acide, sostanze radioattive o merci particolarmente fredde.
- A diretto contatto col vano motore.
- Su un'imbarcazione.
- Su terreno con disilivelli.

Istruzioni di funzionamento

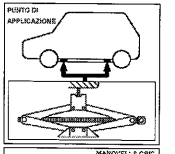

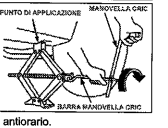

Ogni volta che si cambia una ruota, togliere sempre tutte le tracce di corrosione eventualmente presenti all'interno della ruota e sulla superficie di montaggio della ruota sul veicolo.
Particolari:
Effettuare le operazioni seguendo le "istruzioni di funzionamento".
Usare il cric su un terreno livellato controllando sia il cric che il carico.
Non operare al di sotto di un carico sollevato, a meno che il carico non sia stato fissato saldamente.

- Parcheggiare il veicolo su un terreno livellato e in piano; azionare il freno a fondo.
- Mettere il cambio in "retromarcia" (cambio automatico in posizione "parcheggio").
- Accendere le luci di emergenza.
- Tirare fuori gli attrezzi di sollevamento e la ruota di scorta dall'alloggiamento.
- Prima di inserire il cric, bloccare anteriormente e posteriormente la ruota diagonalmente opposta a quella da togliere.
- Allentare ma non togliere i bulloni ruota con una chiave girandola in senso antiorario.
- Sollevare il cric finché la scanalatura della sua parte superiore si inserisce nell'incavo del telaio, vedi figure.
- Azionare il cric con movimenti lenti e uniformi, utilizzando la manovella del cric.
- Sollevare il veicolo in modo che uno pneumatico gonfiato si stacchi appena da terra; togliere i bulloni e la ruota.
- Installare la ruota e poi serrare un po' ciascun bullone in modo che la ruota resti in sede sul mozzo.
- Abbassare il veicolo e serrare a fondo i bulloni in ordine incrociato girando la chiave in senso orario.

Manutenzione

- Evitare che sulla VITE DEL CRIC si formino accumuli di sporcizia.
- Oliare spesso la VITE DEL CRIC.
- Controllare la targhetta identificativa, mantenere la stessa forma dell'originale.

Particolari:

- Eseguire la manutenzione seguendo le specifiche e operare in modo professionale.
- Non riconvertire la costruzione del cric da soli.

Latviešu valoda (Latvian)

LIETOŠANAS ROKASGRĀMATA

CE

Ražotāji:

„RIKENKAKI CO., LTD."
5-6-12 Chiyoda, Sakado-shi, Saitama, 350-0214, Japāna
Tālr.: 049-248-1661
Fakss: 049-284-4340

„CHANGZHOU RIKENSEIKO MACHINERY CO., LTD."
No. 1903 Zhongwu Ave. Zhonglou Changzhou, Jiangsu, ĶĪNA
Tālr.: 0519-327-5284
Fakss: 0519-327-0811

Lūdzam pirms darbību uzsākšanas izlasīt šo LIETOŠANAS ROKASGRĀMATU!

Standarts: EN 1494:2000+A1:2008

Brīdinājumi!

- Izmantojiet domkratu vienīgi, lai mainītu riteņus.
- Neizmantojiet DOMKRATU vairāk par 50 reizēm.
- DOMKRATS ir izmantojams vienīgi riteņu mainīšanai, nevis citiem nolūkiem.
- Nav paredzēts cilvēku pacelšanai.
- Nekad nelieniet zem transportlīdzekļa, kas pacelts ar domkratu.
- Bīstami izmantot gados veciem cilvēkiem.

Brīdinājuma uzlīmes piktogrammas nozīme

Šis simbols apzīmē potenciālu bīstamību, kas var izraisīt nāvi vai radīt smagus ievainojumus.

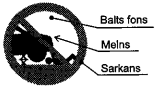

Šis simbols nozīmē, ka Jūs nekādā gadījumā nedrīkstat līst zem transportlīdzekļa, ja tas ir pacelts ar domkratu.

Pantogrāfa domkrata detaļas nosaukums

Skat FIG. 1 attēlu lapā angļu valodā.

Tehniskie dati un izmantojums

Skat FIG. 2 attēlu lapā angļu valodā.

A: AUGŠĒJAIS TURĒTĀJS	F: DOMKRATA SKRŪVE	X: DOMKRATA AUGSTUMS (mm)
B: PAMATNE	G: NOMINĀLĀ SLODZE (tonnas)	Y: SLODZE (tonnas)
C: AUGŠĒJĀ SVIRA	H_1: MINIMĀLAIS AUGSTUMS (mm)	M: MODELIS
D: APAKŠĒJĀ SVIRA	H_2: MAKSIMĀLAIS AUGSTUMS (mm)	T: TIPS
E: ROKTURA SAVIENOJUMS	H_3: IZPILDĪJUMA NODROŠINĀJUMA AUGSTUMS (mm)	

Apstākļi, kādos izmantošana ir aizliegta

- Ja temperatūra ir zemāka par -40°C.
- Uz dubļainas vai smilšainas virsmas.
- Stāvā nogāzē.
- Ekstremālos laikapstākļos: lietusgāzes, taifūna, ciklona, sniegputeņa, pārkona negaisa utt. laikā.
- Nedrīkst celt bīstamas kravas, piemēram: izkausētu metālu, skābas vielas, radioaktīvas vielas vai īpaši trauslas preces.
- Nedrīkst tieši saskarties ar pārsegu.
- Nedrīkst lietot uz kuģa.
- Nedrīkst izmantot uz nelīdzenas virsmas.

Lietošanas instrukcija

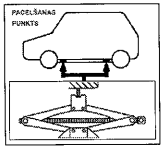

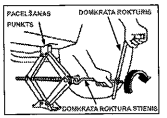

Ik reizi mainot riteni, notīriet korozīju riteņa iekšpusē un uz transportlīdzekļa riteņa montēšanas virsmas.
Papildu informācija:
Lūdzu, rīkojieties tā, kā norādīts "Lietošanas instrukcijā".
Pārbaudot domkratu un paceļamo kravu, novietojiet domkratu uz līdzenas virsmas.
Papildu kravu drīkst pacelt vienīgi tad, ja tā ir droši nostiprināta.

- Novietojiet automobili uz gludas, līdzenas virsmas un iedarbiniet stāvbremzi.
- Pārnesumkārbas sviru novietojiet pozīcijā „atpakaļgaita" (automātiskās pārnesumkārbas sviru pozīcijā „park").
- Ieslēdziet avārijas gaismas.
- No glabāšanas nodalījuma izņemiet domkrata aprīkojumu un rezerves riteni.
- Pirms domkrata izmantošanas, no priekšas un aizmugures nobloķējiet riteni, kas atrodas pa diagonāli no maināmā riteņa.
- Atbrīvojiet, bet nenoskrūvējiet uzgriežņus, atslēgu pagriežot pretēji pulksteņrādītāja virzienam.
- Paceliet domkratu līdz domkrata galviņas rieva ietilpst rāmī, skat. attēlu.
- Darbiniet domkratu lēni un piesardzīgām kustībām, izmantojot domkrata rokturi.
- Paceliet transportlīdzekli tā, lai tukšā riepa nedaudz atrautos no zemes, noņemiet uzgriežņus un riteni.
- Uzstādiet riteni un viegli piegrieziet katru uzgriezni, ritenim ir jānostiprinās uz rumbas.
- Nolaidiet transportlīdzekli un pievelciet uzgriežņus krusteniskā secībā, atslēgu griežot pulksteņrādītāja virzienā.

Apkope

- Raugieties, lai uz DOMKRATA SKRŪVES nekrātos netīrumi.
- Bieži ieeļļojiet DOMKRATA SKRŪVI.
- Pārbaudiet nosaukuma plāksni, jo tai ir jāsaglabājas sākotnējā formā.

Papildu informācija:

- Apkope ir jāveic saskaņā ar specifikācijām, un tas ir jādara speciālistam.
- Nedrīkst patstāvīgi veikt domkrata izjaukšanu.

lietuviškai (Lithuanian)

INSTRUKCIJŲ VADOVAS

CE

Gamintojai:

RIKENKAKI CO., LTD.
5-6-12 Chiyoda, Sakado-shi, Saitama, 350-0214 Japonija
Tel.: 049-248-1661
Faks.:049-284-4340

CHANGZHOU RIKENSEIKO MACHINERY CO., LTD.
Nr. 1903 Zhongwu Ave. Zhonglou Changzhou, Jiangsu KINIJA
Tel.: 0519-327-5284
Faks.:0519-327-0811

Perskaitykite šį INSTRUKCIJŲ VADOVĄ prieš naudodami gaminį!

Norma: EN 1494:2000+A1:2008

Perspėjimas ir įspėjimas

- Domkratą naudokite tik ratams keisti.
- DOMKRATĄ naudokite ne daugiau kaip 50 kartų.
- DOMKRATAS turi būti naudojamas tik ratams keisti, ne kitiems tikslams.
- Keliamame automobilyje neturi būti žmonių.
- Niekada neįlipkite po domkratu pakeltu automobiliu.
- Pavojinga naudoti senyviems žmonėms.

Perspėjimo etiketės piktogramų reikšmė

Šis simbolis nurodo galimą pavojų, kuris gali būti mirtinas arba sukelti sunkius sužalojimus.

Šis simbolis rodo, kad niekada neturėtumėte lįsti po automobiliu, kai jį laiko domkratas.

Trapecinio domkrato dalių pavadinimas

Žr. 1 FIG. angliškame puslapyje.

Techniniai duomenys ir naudojimas

Žr. 2 FIG. angliškame puslapyje.

A	: VIRŠUTINIS LAIKIKLIS	F	: DOMKRATO SRAIGTAS	X	: DOMKRATO AUKŠTIS (mm)
B	: PAGRINDAS	G	: VARDINĖ APKROVA (tonomis)	Y	: APKROVA (tonomis)
C	: VIRŠUTINIS PETYS	H_1	: MAŽIAUSIAS AUKŠTIS (mm)	M	: MODELIS
D	: APATINIS PETYS	H_2	: DIDŽIAUSIAS AUKŠTIS (mm)	T	: TIPAS
E	: RANKENOS JUNGTIS	H_3	: EKSPLOATACINIŲ SAVYBIŲ UŽTIKRINIMO AUKŠTIS (mm)		

Netinkamos naudojimo sąlygos

- Kai temperatūra žemesnė kaip -40°C.
- Ant purvo ar smėlėto grindinio.
- Ant kelio su dideliu nuolydžiu.
- Sudėtingomis gamtinėmis sąlygomis: liūtis su audra, taifūnas, ciklonas, pūga, audra ir t. t.
- Kelti pavojingą krovinį, pvz.: lydytą metalą, rūgštines, radioaktyvias medžiagas ar itin birias medžiagas.
- Tiesioginis kontaktas su gaubtu.
- Naudoti laive.
- Ant skirtingų lygių paviršiaus.

Eksploatavimo instrukcijos

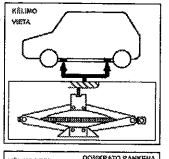

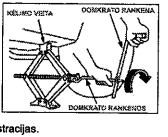

Keičiant ratą visuomet pašalinkite korozija, kuri gali būti ratų viduje ir ant rato tvirtinimo paviršiaus.
Detali informacija:
Dirbkite laikydamiesi „eksploatavimo instrukcijų".
Naudokite domkratą ant lygaus paviršiaus, patikrindami domkratą ir keliamą krovinį.
Negalima dirbti po pakeitu kroviniu, nebent krovinys yra saugiai pritvirtintas.

- Pastatykite automobilį ant lygaus, horizontalaus paviršiaus ir įjunkite stabdį.
- Įjunkite atbulinę pavarą („stovėjimo" padėtį, jei automobilis yra su automatine pavarų dėže).
- Įjunkite įspėjamąsias mirksinčias šviesas.
- Išimkite kėlimo įrankius ir atsarginę padangą iš saugojimo vietos.
- Prieš naudodami domkratą užblokuokite įstrižai priešais nuimamą ratą esančio rato priekį ir galą.
- Atlaisvinkite rato veržles, bet jų neišimkite, sukdami raktą prieš laikrodžio rodyklę.
- Kelkite domkratą, kol jo galvutės griovelis įsistatys į iškilimą rėme, žr. iliustracijas.
- Rankena sukite domkratą lėtais, sklandžiais judesiais.
- Kelkite automobilį tiek, kad pripūsta padanga šiek tiek pakiltų nuo paviršiaus, ištraukite veržles ir nuimkite ratą.
- Uždėkite ratą, po to šiek tiek priveržkite kiekvieną veržlę, ratas turi prisispausti ant stebulės.
- Nuleiskite automobilį ir iki galo kryžmiškai priveržkite rato veržles, sukdami raktą pagal laikrodžio rodyklę.

Priežiūra

- Saugokite DOMKRATO SRAIGTĄ, kad ant jo nesusikauptų nešvarumai.
- DOMKRATO SRAIGTĄ dažnai tepkite alyva.
- Patikrinkite duomenų lentelę, išsaugokite originalią formą.
  Detali informacija:
- Reikia prižiūrėti pagal specifikacijas ir veikti profesionaliai.
- Nekeiskite domkrato konstrukcijos patys.

Polski (Polish)

INSTRUKCJA OBSŁUGI

CE

Producenci:

RIKENKAKI CO., LTD.
5-6-12 Chiyoda, Sakado-shi, Saitama, 350-0214 Japonia
Tel.: 049-248-1661
Faks: 049-284-4340

CHANGZHOU RIKENSEIKO MACHINERY CO., LTD.
No. 1903 Zhongwu Ave. Zhonglou Changzhou, Jiangsu, CHINY
Tel.: 0519-327-5284
Faks: 0519-327-0811

Przed użyciem produktu przeczytaj tę INSTRUKCJĘ OBSŁUGI!

Norma: EN 1494:2000+A1:2008

Ważne informacje i ostrzeżenia

- Używaj podnośnika wyłącznie do zmiany kół.
- Nie używaj PODNOŚNIKA więcej niż 50 razy.
- PODNOŚNIK służy wyłącznie do zmiany kół.
- Zabrania się podnoszenia samochodów z ludźmi w środku.
- Nigdy nie wchodź pod pojazd podniesiony podnośnikiem.
- Podnośnik nie powinien być obsługiwany przez osoby starsze.

Znaczenie piktogramu na naklejce ostrzegawczej

Ten symbol oznacza potencjalne zagrożenie, które może skutkować śmiercią lub poważnymi urazami.

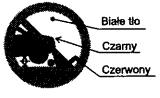

Ten symbol oznacza, że nie należy nigdy wchodzić pod pojazd podniesiony podnośnikiem.

Nazwy części podnośnika trapezowego

Patrz FIG. 1 na stronie w języku angielskim.

Dane techniczne i zastosowanie

Patrz FIG. 1 na stronie w języku angielskim.

A : GŁOWICA	F : ŚRUBA PODNOŚNIKA	X : WYSOKOŚĆ PODNOSZENIA (mm)
B : PODSTAWA	G : OBCIĄŻENIE NOMINALNE (tony)	Y : OBCIĄŻENIE (tony)
C : GÓRNE RAMIĘ	H_1 : MINIMALNA WYSOKOŚĆ (mm)	M : MODEL
D : DOLNE RAMIĘ	H_2 : MAKSYMALNA WYSOKOŚĆ (mm)	T : TYP
E : UCHWYT KORBY	H_3 : WYSOKOŚĆ SKUTECZNA PODNOSZENIA (mm)	

Kiedy nie wolno używać podnośnika

- Jeśli temperatura jest niższa niż -40°C.
- Na mokrym podłożu lub piachu.
- Na bardzo nachylonych drogach.
- W skrajnych warunkach pogodowych: burze z deszczem, tajfuny, cyklony, burze śnieżne, burze z piorunami itp.
- Do podnoszenia niebezpiecznych, ciężkich obiektów, np.: roztopiony metal, kwasy, substancje radioaktywne lub wyjątkowo kruche przedmioty.
- W przypadku bezpośredniego kontaktu z maską samochodu.
- Na lodziach.
- Jeśli podłoże jest nierówne.

Instrukcja obsługi

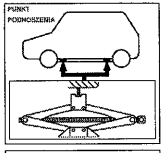

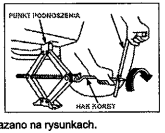

Zawsze przed wymianą koła usuwaj wszelkie ślady korozji obecne po wewnętrznej stronie koła lub na powierzchni montażowej pojazdu.
Szczegóły:
Obsługuj podnośnik zgodnie z instrukcją obsługi.
Używaj podnośnika na płaskim podłożu i monitoruj podnośnik oraz obciążenie.
Nie wchodź pod podnoszone obciążenie, chyba że obciążenie zostało odpowiednio zabezpieczone.

- Zaparkuj samochód na płaskiej, równej powierzchni i mocno zaciągnij hamulec.
- Ustaw bieg na „wsteczny" (w przypadku skrzyni automatycznej na „parkowanie").
- Włącz światła awaryjne.
- Wyjmij podnośnik i zapasowe koło z bagażnika.
- Przed użyciem podnośnika zablokuj przód i tył koła po przekątnej od wymienianego koła.
- Poluzuj (ale nie usuwaj) nakrętki koła, obracając klucz w kierunku przeciwnym do ruchu wskazówek zegara.
- Podnieś podnośnik, tak aby rowek w głowicy objął występ ramy, jak pokazano na rysunkach.
- Obsługuj podnośnik powolnymi i płynnymi uchami za pomocą korby.
- Podnieś pojazd na taką wysokość, aby napompowana opona nieznacznie odstawała od podłoża. Zdejmij nakrętki i koło.
- Załóż koło, następnie delikatnie dokręć każdą nakrętkę. Koło musi spoczywać na piaście.
- Opuść pojazd i całkowicie dokręć nakrętki w kolejności po przekątnej, obracając klucz w kierunku zgodnym z ruchem wskazówek zegara.

Konserwacja

- Usuwaj ze ŚRUBY PODNOŚNIKA wszelki nagromadzony brud.
- Często smaruj ŚRUBĘ PODNOŚNIKA olejem.
- Sprawdzaj tabliczkę znamionową. Zachowaj oryginalny kształt.

Szczegóły:

- Konserwacja musi być przeprowadzana zgodnie ze specyfikacjami i przez osobę wykwalifikowaną.
- Nie modyfikuj samodzielnie konstrukcji podnośnika.

Português (Portuguese)

MANUAL DE INSTRUÇÕES

CE

Fabricantes:

RIKENKAKI CO., LTD.
5-6-12 Chiyoda, Sakado-shi, Saitama, 350-0214 Japão
Tel.: 049-248-1661
Fax: 049-284-4340

CHANGZHOU RIKENSEIKO MACHINERY CO., LTD.
No. 1903 Zhongwu Ave. Zhonglou Changzhou, Jiangsu CHINA
Tel.: 0519-327-5284
Fax: 0519-327-0811

Por favor leia o manual de instruções antes da utilização!

Norma: EN 1494:2000+A1:2008

Cuidado e perigo

- Utilize o macaco apenas para troca de rodas.
- Não utilize o macaco mais de 50 vezes.
- O macaco destina-se única e exclusivamente para troca de rodas.
- Não utilizar para elevar pessoas.
- Nunca fique debaixo de um veículo elevado por um macaco.
- Perigo potencial para utilizadores de terceira idade.

Significado do pictograma na etiqueta de perigo

Este símbolo assinala um perigo potencial que pode resultar em morte ou ferimentos graves.

Este símbolo assinala a interdição de se colocar debaixo de um veículo quando este está a ser elevado por um macaco.

Designação das peças do macaco pantográfico

Ver FIG. 1 nas instruções em inglês.

Dados Técnicos e Utilização

Ver FIG. 2 nas instruções em inglês.

A : PLATAFORMA SUPERIOR	F : EIXO DO MACACO	X : ALTURA DO MACACO (mm)
B : BASE	G : CARGA NOMINAL (tonelada)	Y : CARGA (tonelada)
C : BRAÇO SUPERIOR	H_1 : ALTURA MÍNIMA (mm)	M : MODELO
D : BRAÇO INFERIOR	H_2 : ALTURA MÁXIMA (mm)	T : TIPO
E : JUNTA DE ARTICULAÇÃO	H_3 :ALTURA DE UTILIZAÇÃO SEGURA (mm)	

Não usar nas seguintes condições

- Temperaturas abaixo dos -40°C.
- Chão instável ou de areia.
- Estradas muito inclinadas
- Condições meteorológicas extremas: tempestade, furacão, ciclone, nevão, trovoadas, etc.
- Cargas perigosas e pesadas tais como: metal fundido, substâncias ácidas, substâncias radioativas ou materiais frágeis.
- Em contacto direto com a carroçaria.
- Dentro de um barco.
- Chão desnivelado.

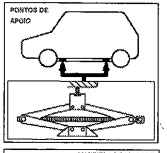

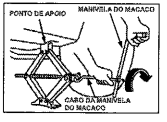

Instruções de utilização

Ao trocar uma roda, remova qualquer vestígio de ferrugem presente no interior da roda ou na superfície de montagem da roda do veículo.
Descrição:
Por favor siga as instruções de acordo com as "instruções de utilização".
Utilize o macaco num chão nivelado enquanto o instala e verifique a carga.
Não deve utilizar o macaco com cargas muito pesadas salvo se estas estiverem amarradas de forma segura.

- Estacione o carro num local plano, chão nivelado e trave o carro de forma segura.
- Coloque a transmissão em "marcha-atrás" (transmissão automática em "estacionar (P)").
- Ligue os quatro piscas.
- Retire as peças do macaco e a roda suplente da mala.
- Trave a roda da frente e de trás diagonalmente opostas à roda que vai trocar antes de colocar o macaco.
- Solte, mas não retire completamente as porcas parafusos da roda no sentido dos ponteiros do relógio.
- Eleve o macaco até chegar à altura necessária de acordo com o indicado na tabela da figura acima.
- Manuseie o macaco com precaução, movimentos lentos, ao utilizar a manivela do macaco.
- Eleve o veículo até conseguir retirar a roda de forma a não raspar o chão, retire as porcas parafusos e a roda.
- Instale a roda, aperte levemente cada porca parafuso, a roda deve ficar bem centrada.
- Depois de descer o veículo, aperte firmemente as porcas parafusos uma por uma no sentido contrário aos ponteiros do relógio.

Manutenção

- Por favor mantenha o EIXO DO MACACO limpo e sem sujidade acumulada.
- Por favor lubrifique o EIXO DO MACACO regularmente.
- Verifique a placa de identificação, mantenha a forma original.

Descrição:

- Deve utilizar esta ferramenta segundo o especificado e de forma responsável.
- Não altere por sua iniciativa a estrutura do macaco.

Română (Romanian)

MANUAL DE INSTRUCȚIUNI

CE

Fabricanți:

RIKENKAKI CO., LTD.
5-6-12 Chiyoda, Sakado-shi, Saitama, 350-0214 Japonia
Tel.: 049-248-1661
Fax: 049-284-4340

CHANGZHOU RIKENSEIKO MACHINERY CO., LTD.
No. 1903 Zhongwu Ave. Zhonglou Changzhou, Jiangsu CHINA
Tel.: 0519-327-5284
Fax: 0519-327-0811

Citiți acest MANUAL DE INSTRUCȚIUNI înainte de utilizare!

Norma: EN 1494:2000+A1:2008

Atenționări și avertismente

- Utilizați cricul numai pentru înlocuirea roților.
- Utilizați CRICUL de cel mult 50 de ori.
- CRICUL se utilizează numai pentru înlocuirea roților, nu în alte scopuri.
- În vehicul nu trebuie să se afle nicio persoană.
- Nu intrați niciodată sub vehiculul ridicat pe cric.
- Este periculoasă utilizarea de către persoane în vârstă.

Semnificația pictogramelor de pe eticheta de atenționare

Acest simbol indică un pericol potențial care ar putea duce la moarte sau la accidentare gravă.

Acest simbol vă interzice să intrați sub vehicul când vehiculul este ridicat pe cric.

Denumirea pieselor cricului manual

Consultați FIG 1 pe pagina în engleză.

Date tehnice și utilizare

Consultați FIG 2 pe pagina în engleză.

A: PLATFORMA	F: ȘURUBUL CRICULUI	X: ÎNĂLȚIMEA CRICULUI (mm)
B: TALPA	G: SARCINA NOMINALĂ (tone)	Y: SARCINA (tone)
C: BRAȚUL SUPERIOR	H_1: ÎNĂLȚIMEA MINIMĂ (mm)	M: MODELUL
D: BRAȚUL INFERIOR	H_2: ÎNĂLȚIMEA MAXIMĂ (mm)	T: TIPUL
E: ARTICULAȚIA PT. LEVIER	H_3: ÎNĂLȚIMEA PENTRU ATINGEREA PERFORMANȚEI (mm)	

Condiții în care este interzisă utilizarea

- Când temperatura este sub -40°C.
- Pe teren noroios sau nisipos.
- Pe o pantă abruptă.
- În condiții meteorologice extreme: furtună cu ploaie, taifun, ciclon, furtună de zăpadă, furtună cu descărcări electrice etc.
- Dacă vehiculul este încărcat cu produse grele sau periculoase, cum ar fi: metal topit, acid, substanțe radioactive sau produse fragile.
- Contact direct cu capota.
- Utilizarea pe o ambarcațiune.
- Teren denivelat.

Instrucțiuni de utilizare

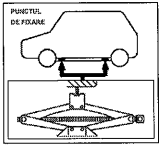

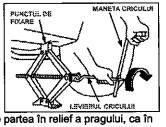

Când înlocuiți o roată, îndepărtați întotdeauna rugina care poate fi prezentă pe interiorul roții și pe suprafața de montare a roții pe vehicul.
Detalii:
Utilizați cricul conform instrucțiunilor de utilizare.
Utilizați cricul pe un teren plan, verificând cricul și sarcina.
Nu utilizați cricul dacă vehiculul este încărcat, decât dacă încărcătura este bine fixată.

- Parcați mașina pe un teren orizontal și plan și acționați ferm frâna de mână.
- Aduceți transmisia în marșarier (transmisia automată în poziția de parcare).
- Porniți luminile de avarie.
- Scoateți instrumentele pentru cric și roata de rezervă din compartimentul acestora.
- Înainte de a utiliza cricul, blocați partea din față și din spate a roții care este diagonal opusă față de roata care urmează a fi desfăcută.
- Destrângeți, dar nu înlăturați prizoanele rotind cheia în sens antiorar.
- Ridicați cricul până când adâncitura de pe capul cricului se potrivește pe partea în relief a pragului, ca în ilustrații.
- Acționați cricul cu o mișcare lentă și lină, folosind maneta cricului.
- Ridicați vehiculul astfel încât anvelopa umflată să fie doar puțin ridicată de la sol, iar apoi îndepărtați prizoanele și roata.
- Montați roata, iar apoi strângeți ușor fiecare prizon; roata trebuie să se afle pe butuc.
- Coborâți vehiculul și strângeți complet prizoanele în cruce, rotind cheia în sens orar.

Întreținerea

- Nu lăsați să se adune murdărie pe ȘURUBUL CRICULUI.
- Ungeți frecvent ȘURUBUL CRICULUI.
- Verificați plăcuța cu denumirea și păstrați forma inițială.

Detalii:

- Respectați indicațiile privind întreținerea.
- Nu dezasamblați și nu reasamblați cricul.

Slovensky (Slovak)

NÁVOD NA POUŽITIE

CE

Výrobcovia:

RIKENKAKI CO., LTD.
5-6-12 Chiyoda, Sakado-shi, Saitama, 350-0214 Japonsko
Tel.: 049-248-1661
Fax:049-284-4340

CHANGZHOU RIKENSEIKO MACHINERY CO., LTD.
No. 1903 Zhongwu Ave. Zhonglou Changzhou, Jiangsu, ČÍNA
Tel.: 0519-327-5284
Fax:0519-327-0811

Pred používaním si prečítajte tento NÁVOD NA OBSLUHU!

Technická norma: EN 1494:2000+A1:2008

Upozornenia a výstrahy

- Zdvihák používajte len na výmenu kolies.
- Tento zdvihák nepoužívajte viac ako 50-krát.
- Tento ZDVIHÁK nepoužívajte na iné účely, než na výmenu pneumatík.
- Nesmie sa používať na zdvíhanie osôb.
- Nikdy nepracujte pod vozidlom, keď je zdvihnuté pomocou zdviháka.
- Nebezpečné pre používanie staršími osobami.

Význam piktogramov a výstražných štítkov

Tento symbol označuje potenciálne nebezpečenstvo, ktoré by mohlo mať za následok smrť alebo vážne zranenie.

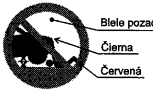

Tento symbol znamená zákaz pracovať pod vozidlom, keď je zdvihnuté pomocou zdviháka.

Názvy dielov pantografického zdviháka

Pozri FIG. 1 v anglickom texte.

Technické parametre a použitie

Pozri FIG. 2 v anglickom texte.

A : HORNÁ PODPERA	F : SKRUTKA ZDVIHÁKA	X : VÝŠKA ZDVIHÁKA (mm)
B : ZÁKLADNÁ DOSKA	G : MENOVITÉ ZAŤAŽENIE (v tonách)	Y : ZAŤAŽENIE (v tonách)
C : HORNÉ RAMENO	V_1 : MINIMÁLNA VÝŠKA (mm)	M : MODEL
D : SPODNÉ RAMENO	V_2 : MAXIMÁLNA VÝŠKA (mm)	T : TYP
E : KĽB KĽUKY	V_3 : PREVÁDZKOVÁ VÝŠKA (mm)	

Podmienky, za ktorých sa zdvihák nesmie používať

- Pri teplote pod -40°C.
- Na rozbahnenej alebo piesčitej pôde.
- Na ceste s veľkým sklonom.
- Pri extrémnych klimatických podmienkach: búrka, tajfún, cyklón, snehová búrka, búrka s prítomnosťou bleskov, atď.
- Zdvíhanie veľmi ťažkých predmetov, napríklad: roztavený kov, kyselinové látky, rádioaktívne látky alebo mimoriadne krehké predmety.
- Priamy kontakt s kapotou.
- Používanie na lodi.
- Nerovný povrch.

Návod na používanie

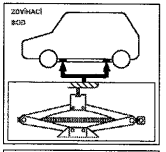

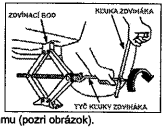

Pri výmene kolesa vždy odstráňte koróziu, ktorá môže byť prítomná na vnútornej strane kolesa a na náboji kolesa.
Podrobnosti:
Pri práci postupujte podľa „návodu na obsluhu".
Funkčnosť zdviháka a bremeno kontrolujte na rovnom povrchu.
Pri používaní sa záťaž nesmie zvyšovať, ak bremeno nie je riadne upevnené.

- Vozidlo zaparkujte na rovnom a pevnom povrchu a zatiahnite parkovaciu brzdu.
- V prípade ručnej prevodovky zaraďte „spiatočku" (v prípade automatickej prevodovky páku prepnite do polohy „Park").
- Zapnite výstražné svetlá.
- Z batožinového priestoru vyberte nástroje na zdvíhanie a rezervné koleso.
- Pred zdvíhaním zaistite koleso nachádzajúce sa uhlopriečne od kolesa, ktoré sa bude zdvihať tak, že spredu a zozadu vložte kliny.
- Matice uvoľnite otáčaním kľúča na matice doľava, ale neodstraňujte ich.
- Zdvihák zdvihajte, kým zúbkovaná podpera ložnej plochy zapadne do rámu (pozri obrázok).
- Zdvihák zdvíhajte pomalým a plynulým otáčaním kľuky zdviháka.
- Vozidlo zdvihnite do takej výšky, aby koleso s nahustenou pneumatikou bolo mierne nad povrchom, odstráňte matice a koleso.
- Založte koleso, potom mierne utiahnite každú maticu tak, aby koleso pevne dosadalo na náboj kolesa.
- Vozidlo spustite a matice úplne dotiahnite nakríž otáčaním kľúča doprava.

Údržba

- Na SKRUTKE ZDVIHÁKA nesmú byť žiadne nečistoty.
- Na SKRUTKU ZDVIHÁKA pravidelne nanášajte olej.
- Zdvihák uchovávajte v pôvodnom tvare. Pozrite si typový štítok.

Podrobnosti:

- Údržbu musí vykonávať odborník v súlade s technickými podmienkami.
- Používateľ nesmie upravovať konštrukciu zdviháka.

Slovensko (Slovene)

NAVODILA ZA UPORABO

CE

Proizvajalca:

RIKENKAKI CO., LTD.
5-6-12 Chiyoda, Sakado-shi, Saitama, 350-0214 Japonska
Tel.: 049-248-1661
Faks: 049-284-4340

CHANGZHOU RIKENSEIKO MACHINERY CO., LTD.
No. 1903 Zhongwu Ave. Zhonglou Changzhou, Jiangsu KITAJSKA
Tel.: 0519-327-5284
Faks: 0519-327-0811

Prosimo preberite pred uporabo ta NAVODILA ZA UPORABO!

Standard: EN 1494:2000+A1:2008

Obvestilo in opozorilo

- Dvigalko uporabljajte le za menjavo koles.
- DVIGALKO lahko uporabite največ 50-krat.
- DVIGALKO lahko uporabljate le za menjavo pnevmatik in ne za druge namene.
- Ne dvigujte, kadar so v vozilu osebe.
- Nikoli se ne zadržujte pod vozilom, dvignjenim z dvigalko.
- Uporaba dvigalke je lahko nevarna za starejše osebe.

Pomen znakov na opozorilnih etiketah

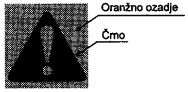

Ta simbol opozarja na morebitni nevarnost, ki lahko povzroči resne ali smrtno nevarne poškodbe.

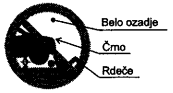

Ta simbol opozarja, da ne smete biti nikoli pod vozilom, ki je dvignjeno z dvigalko.

Nazivi delov dvigalke

Glejte FIG. 1 v angleškem delu navodil.

Tehnični podatki in lastnosti

Glejte FIG. 2 v angleškem delu navodil.

A : ZGORNJI NOSILEC	F : VIJAK DVIGALKE	X: VIŠINA DVIGALKE (mm)
B : PODNOŽJE	G : NAZIVNA OBREMENITEV (ton)	Y: OBREMENITEV (ton)
C : ZGORNJA ROČICA	H_1 : MINIMALNA VIŠINA (mm)	M : MODEL
D : SPODNJA ROČICA	H_2 : NAJVEČJA VIŠINA (mm)	T : TIP
E : ZGLOB ROČICE	H_3 : VIŠINA Z ZAGOTOVLJENO ZMOGLJIVOSTJO (mm)	

Pogoji, pri katerih uporaba ni dovoljena

- Ko je temperatura nižja od -40°C
- Na blatni ali peščeni podlagi
- Na cesti z velikim naklonom.
- V izrednih vremenskih razmerah: neurje, tajfun, tornado, snežni vihar, nevihta itd.
- Dvigovanje nevarnih bremen, na primer stopljene kovine, kislin, radioaktivnih snovi ali posebno krhkih snovi.
- Neposreden stik z motornim pokrovom
- Uporaba na plovilih
- Uporaba na terenu z različnimi nivoji

Navodila za uporabo

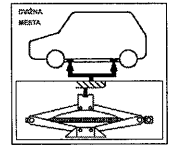

Kadarkoli zamenjate kolo, vedno odstranite rjo, ki se nahaja na površini platišča ali pesta vozila

Podrobnosti:

Prosimo uporabljajte napravo kot je navedeno v navodilih za uporabo.

Dvigalko uporabljajte na ravni površini, preverite dvigalko in breme.

Ne upravljajte pod dvignjenim bremenom, razen če je slednji varno pritrjen.

- Parkirajte vozilo na ravni površini in dobro pritegnite ročno zavoro.
- Prestavite menjalnik v vzvratno prestavo (položaj "park" pri avtomatskih menjalnikih)
- Vklopite varnostne utripalke.
- Vzemite orodje za dviganje in rezervno kolo iz njegovega ležišča.
- Še preden uporabite dvigalko, blokirajte prednji in zadnji del kolesa, ki je diagonalno nasproti kolesa, ki ga nameravate menjati.
- Z vrtenjem ključa v nasprotni smeri urnih kazalcev razrahljajte, vendar ne odstranite kolesnih vijakov.
- Dvigajte dvigalko, dokler njena glava ne doseže šasije - glejte sliko.
- Dvigajte z enakomernimi, počasnimi gibi ročice dvigalke.
- Dvignite vozilo toliko, da se pnevmatika malo dvigne od površine, odstranite matice in kolo.
- Zamenjajte kolo in nato rahlo privijte vsako matico, pri čemer mora kolo nasesti na pesto.
- Spustite vozilo, z vrtenjem ključa v smeri urnih kazalcev do konca privijte matice po navzkrižnem zaporedju

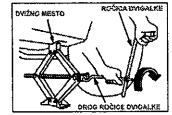

Vzdrževanje

- Prosimo preprečite kopičenje nečistoč na DVIGALKI
- Prosimo pogosto naoljite DVIGALKO
- Preverite ploščico s podatki, ohranite prvotno obliko.

Podrobnosti:

- Pri vzdrževanju je potrebno upoštevati specifikacije.
- Prepovedano je spreminjanje konstrukcije dvigalke.

Español (Spanish)

MANUAL DE INSTRUCCIONES

CE

Fabricantes:

RIKENKAKI CO.
5-6-12 Chiyoda, Sakado-shi, Saitama, 350-0214 Japón
Tel.: 049-248-1661
Fax:049-284-4340

CHANGZHOU RIKENSEIKO Machinery Co., LTD.
No. 1903 Zhongwu Ave. Zhonglou Changzhou, Jiangsu CHINA
Tel.: 0519-327-5284
Fax:0519-327-0811

Por favor, ¡lea este MANUAL DE INSTRUCCIONES antes de usar el equipo!

Norma: EN 1494:2000 + A1: 2008

Atención y advertencias

- Utilice el gato únicamente para cambiar las ruedas.
- No utilice el GATO más de 50 veces.
- El GATO se utiliza solo para la sustitución de los neumáticos, no para otros fines.
- Ninguna persona a bordo.
- Nunca se meta debajo del vehículo elevado con el gato.
- Es peligroso el uso por ancianos.

Significado del pictograma en la etiqueta de precaución

Fondo naranja

Negro

Este símbolo indica un peligro potencial que puede causar la muerte o lesiones graves.

Fondo blanco

Negro

Rojo

Este símbolo indica que nunca se meta debajo del vehículo cuando esté sostenido por el gato

Nombre de las piezas del gato elevador de tijera

Consulte FIG 1 en la página en inglés.

Datos técnicos y aplicación

Consulte FIG 2 en la página en inglés.

A: SOPORTE SUPERIOR	F: TORNILLO DEL GATO	X: ALTURA DEL GATO (mm)
B: BASE	G: CARGA NOMINAL (ton)	Y: CARGA (ton)
C: BRAZO SUPERIOR	H_1: ALTURA MÍNIMA (mm)	M: MODELO
D: BRAZO INFERIOR	H_2: ALTURA MÁXIMA (mm)	T: TIPO
E: MANIVELA	H_3: ALTURA DE GARANTÍA DE RENDIMIENTO (mm)	

No utilizar en estas condiciones:

- Cuando la temperatura sea inferior a 40°C.
- En un terreno con barro o de arena.
- En una carretera con mucha pendiente.
- En condiciones meteorológicas extremas: tormenta, tifón, ciclón, tormenta de nieve, tormenta eléctrica, etc.
- Carga peligrosa, pesada, por ejemplo: metal fundido, sustancia ácida, sustancia radiactiva o mercancía especialmente frágil.
- Contacto con el capó directamente.
- Uso en un barco.
- Terreno con desnivel.

Instrucciones de uso

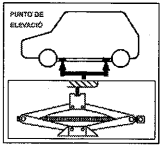

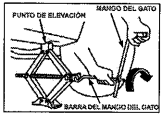

Cada vez que se cambia una rueda, elimine siempre la corrosión que pueda presentar en su interior y en la superficie de montaje de la rueda en el vehículo.
Detalles:
Por favor, siga las "Instrucciones de uso".
Utilice el gato sobre un terreno llano, mientras hace las comprobaciones del mismo y de la carga.
No debe utilizarse añadiendo una carga, a menos que la carga se sujete de forma segura

- Aparque el coche en un terreno plano y llano y eche el freno de mano con firmeza.
- Ponga la marcha en "marcha atrás" (cambio automático en "aparcar").
- Encienda las luces de emergencia.
- Retire las herramientas del gato y la rueda de repuesto de la zona de colocación.
- Antes de utilizar el gato, bloquee la parte delantera y trasera de la rueda situada en diagonal con la rueda que se ha de retirar.
- Afloje, pero sin retirar las tuercas de las ruedas, girando la llave en sentido contrario a las agujas de un reloj.
- Eleve el gato hasta que la ranura de la cabeza del gato encaje en el reborde del bastidor, vea las ilustraciones.
- Utilice el gato con un movimiento lento y suave, usando el mango del gato.
- Eleve el vehículo de tal manera que un neumático inflado justo quede por encima de la superficie, retire las tuercas y la rueda.
- Instale la rueda y apriete ligeramente cada tuerca, la rueda debe estar apoyada en el cubo central de la misma.
- Baje el vehículo y apriete completamente las tuercas de la rueda en una secuencia lineal de cruz girando la llave en el sentido de las agujas de un reloj.

Mantenimiento

- Por favor, evite que se acumule suciedad en el TORNILLO DEL GATO.
- Por favor, engrase el TORNILLO DEL GATO a menudo.
- Compruebe la placa de características, mantenga la misma forma que tenía en origen.

Detalles:

- Debe hacer el mantenimiento un profesional y de acuerdo con las especificaciones.
- No haga cambios en la construcción del gato si es usted un particular.

Svenska (Swedish)

BRUKSANVISNING

CE

Tillverkare:

RIKENKAKI CO., LTD.
5-6-12 Chiyoda, Sakado-shi, Saitama, 350-0214 Japan
Tel: 049-248-1661
Fax: 049-284-4340

CHANGZHOU RIKENSEIKO MACHINERY CO., LTD.
No. 1903 Zhongwu Ave. Zhonglou Changzhou, Jiangsu KINA
Tel: 0519-327-5284
Fax: 0519-327-0811

Läs denna BRUKSANVISNING före användning!

Norm: EN 1494:2000+A1:2008

Säkerhetsnormer och varningar

- Använd endast domkraften för att byta hjul.
- Använd DOMKRAFTEN högst 50 gånger.
- DOMKRAFTEN får endast användas till att byta däck, inget annat.
- Lyft aldrig upp personer med den.
- Stå aldrig under ett fordon som lyfts upp med domkraft.
- Det är farligt att använda domkraften om man är äldre.

Betydelse v symbolen på varningsetiketten

Denna symbol indikerar en potentiell risk som kan leda till livsfara eller allvarliga skador.

Denna symbol betyder att du aldrig ska stå under fordonet när det är upplyft av domkraften.

Nomenklatur för pantografdomkraften

Se FIG 1 på den engelska sidan.

Tekniska data och tillämpning

Se FIG 2 på den engelska sidan.

A	: TOPPHÅLLARE	F	: DOMKRAFTSSKRUV	X	: DOMKRAFTSHÖJD (mm)
B	: BAS	G	: NOMINELL BELASTNING (ton)	Y	: LAST (ton)
C	: ÖVRE ARM	H_1	:MIN: HÖJD (mm)	M	: MODELL
D	: UNDRE ARM	H_2	: MAX. HÖJD (mm)	T	: TYP
E	: HANDTAGSFOG	H_3	: HÖJD SOM GARANTERAR PRESTANDAN (mm)		

Förhållanden då domkraften inte får användas

- Då temperaturen understiger -40°C.
- På lerig eller sandig mark.
- På vägar som lutar mycket.
- I extrema naturförhållanden: regnstorm, tyfon, cyklon, snöstorm, åskstorm osv.
- Last av farliga eller tunga ämnen som: smält metall, syror, radioaktiva substanser eller mycket sköra föremål.
- Direktkontakt med huven.
- Användning på båtar.
- Mark med olika nivåer.

Användningsinstruktioner

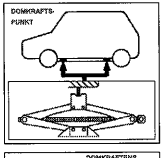

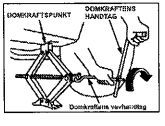

När du byter ett hjul, ska du alltid avlägsna eventuell rost som kan finnas på insidan av hjulet och hjulets monteringsyta.
Detaljer:
Utför åtgärderna i "användningsinstruktioner".
Använd domkraften på jämn mark så att du kan kontrollera domkraften och lasten.
Arbeta inte under upplyft last om inte lasten är fäst ordentligt.

- Parkera bilen på platt, jämn mark och dra åt bromsen ordentligt.
- Ställ växelspaken på "backväxeln" (automatisk växellåda på "parkering").
- Sätt på varningslampan.
- Ta bort domkraftsverktygen och reservdäcket från förvaringsutrymmet.
- Blockera hjulet diagonal motsatt hjulet som ska tas bort bade framtill och baktill innan du använder domkraften.
- Lossa men ta inte bort hjulmuttrarna genom att vrida nyckeln medurs.
- Lyft upp domkraften till dess skåra passar in i ramens utrymme som i illustrationerna.
- Använd domkraften med långsamma, mjuka rörelser genom att veva.
- Lyft fordonet så att ett pumpat däck är precis ovanför marken. Ta bort muttrarna och hjulet.
- Installera hjulet och dra sedan åt varje mutter något. Hjulet ska sitta på navet.
- Sänk ner fordonet och dra åt hjulmuttrarna ordentligt i en korssekvens genom att vrida nyckeln medurs.

Underhåll

- Se till att DOMKRAFTSSKRUVEN inte blir smutsig.
- Olja in DOMKRAFTSSKRUVEN ofta.
- Kontrollera märkplåten och se till att formen förblir som den var ursprungligen.

Detaljer:

- Utför underhållet enligt specifikationerna och med professionell hjälp.
- Ändra inte på domkraftens konstruktion själv.

Türkçe (Turkish)

KULLANIM KILAVUZU

CE

İmalatçılar:

RIKENKAKI CO., LTD.
5-6-12 Chiyoda, Sakado-shi, Saitama, 350-0214 Japonya
Tel: 049-248-1661
Faks:049-284-4340

CHANGZHOU RIKENSEIKO MACHINERY CO., LTD.
No. 1903 Zhongwu Ave. Zhonglou Changzhou, Jiangsu ÇİN
Tel: 0519-327-5284
Faks:0519-327-0811

Lütfen çalıştırmadan önce bu KULLANIM KILAVUZUNU okuyun.

Standart: EN 1494:2000+A1:2008

Dikkat ve uyarı

- Krikoyu yalnızca tekerlekleri değiştirmek için kullanın.
- KRİKOYU 50 defadan fazla kullanmayın.
- KRİKO yalnızca lastikleri değiştirmek üzere kullanılabilir, başka bir amaçla kullanılamaz.
- Üzerinde insan taşınamaz.
- Asla kriko ile kaldırılan bir aracın altına girmeyin.
- Eskidikçe kullanımı daha tehlikeli bir hal almaktadır.

Uyarı etiketlerinin üzerindeki resimlerin anlamları

Turuncu arka plan

Siyah

Bu simge, ölüm ya da ciddi yaralanmalara neden olabilecek olası bir tehlikeyi ifade etmektedir.

Beyaz arka plan.

Siyah

Kırmızı

Bu simge, kriko ile desteklenen bir aracın altına girmemeniz gerektiğini ifade etmektedir.

Pantograf Krikonun Parçalarının Adları

İngilizce sayfadaki FIG. 1'e başvurun.

Teknik Veriler ve Uygulamalar

İngilizce sayfadaki FIG. 2'ye başvurun.

A : ÜST DESTEK	F : KRİKO VİDASI	X : KRİKO YÜKSEKLİĞİ (mm)
B : TABAN	G : NOMİNAL YÜK (ton)	Y : YÜK (ton)
C : ÜST KOL	H_1 : ASGARİ YÜKSEKLİK (mm)	M : MODEL
D : ALT KOL	H_2 : AZAMİ YÜKSEKLİK (mm)	T : TÜR
E : TUTACAK BİRLEŞME NOKTASI	H_3 : PERFORMANS GÜVENCESİ VERİLEN YÜKSEKLİK (mm)	

Ürünün Kullanılmaması Gereken Koşullar

- Sıcaklık -40°C'nin altında olduğunda.
- Çamurlu ya da kumlu zemin üzerinde.
- Yüksek eğimli yollarda.
- Fırtına, tayfun, kasırga, tipi, gök gürültülü fırtına gibi ağır doğal koşullarda.
- Erimiş metal, asitli madde, radyoaktif madde gibi tehlikeli ağırlıklar ya da kırılgan maddeler yüklenmesi.
- Doğrudan kaporta ile temas ettirilmesi.
- Tekne üzerinde kullanılması.
- Farklı seviyeli zeminlerde.

Çalıştırma talimatları

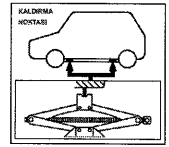

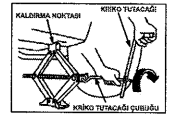

Bir tekerleği değiştirirken, tekerlek içerisinde ya d araç üzerindeki tekerlek monte etme alanında oluşmuş olabilecek paslanma durumlarını ortadan kaldırın.

Ayrıntılar:

Lütfen "çalıştırma talimatlarına" uygun şekilde kullanın.

Krikoyu, kriko ve yükü kontrol ederek, düz zemin üzerinde çalıştırın.

Yüklerin sağlam bir şekilde sabitlenmediği durumlarda, yük kaldırma amaçlı olarak kullanılmamalıdır.

- Arabayı düz bir zemine park edin ve el frenini sıkıca çekin.
- Aracı "geri vitese" alın (otomatik viteste "park" konumu).
- Tehlike ikaz flaşörlerini açın.
- Kaldırma araçları ile yedek lastiği bagaj alanından çıkarın.
- Krikoyu çalıştırmadan önce çıkarılacak lastiğin karşısındaki tekerleklerin önüne ve arkasına takoz yerleştirin.
- İngiliz anahtarını saat yönünün tersine çevirerek tekerlek somunlarını gevşetin, ancak çıkarmayın.
- Krikonun üst kısmı şasinin alt kalıbına gelecek şekilde krikoyu kaldırın. Çizimlere göz atın.
- Krikoyu, tutacağı kullanarak yavaş ve yumuşak hareketlerle çalıştırın.
- Aracı, patlamış olan lastiğin çıkabileceği kadar kaldırın, somunları ve tekerleği çıkarın.
- Tekerleği takın ve somunları teker teker sıkıştırın, tekerleğin yuvaya tam olarak oturması gerekmektedir.
- Aracı indirin ve ingiliz anahtarını saat yönünde çevirerek tekerlek somunlarını çapraz sırayla giderek tamamen sıkıştırın.

Bakım

- Lütfen KRİKO VİDASINDA kir birikmesini engelleyin.
- Lütfen KRİKO VİDASINI sıklıkla yağlayın.
- İsimliği kontrol edin, ürünün orijinal şeklini koruyun.

Ayrıntılar:

- Bakımı, özelliklerine uygun şekilde bir uzman tarafından yapılmalıdır.
- Krikonun yapısını özel olarak değiştirmeyin.

99011U68L28-02E

BATTERY LABEL SYMBOL MEANINGS

	No smoking, no naked flames, no sparks			Battery acid
	Shield eyes			Note operating instructions
	Keep away from children			Explosive gas

Prepared by

MAGYAR SUZUKI CORPORATION LTD.

December, 2013

Part No. 99011U68L28-02E

Printed in Hungary

SPV/131218/3/0703

SERVICE STATION INFORMATION

Fuel recommendation:
See page 1-1

Engine oil recommendation:
Gasoline engine:

(Except Sport model)
Quality: SL or SM
Viscosity: SAE **0W-20**, 5W-30

(Sport model)
Quality: SG, SH, SJ, SL or SM
Viscosity: SAE **0W-20**, 5W-30, 10W-30, 10W-40

Diesel engine:
Synthetic oil, Quality: ACEA C2 or C3
Viscosity: SAE **5W-30**

For further details, see "Engine Oil and Filter" in the "INSPECTION AND MAINTENANCE" section.

Brake and clutch fluid:
DOT4 or SAE J1704

Automatic transaxle fluid:
SUZUKI ATF 3317 or Mobil ATF 3309

Tire cold pressure:
See the "Tire Information Label" located on the driver's door lock pillar.

Ⓢ

SUZUKI

MAGYAR SUZUKI CORPORATION LTD. Part No. 99011U68L28-02E December, 2013 Printed in Hungary