A Word to Mazda Owners

Thank you for choosing a Mazda. We at Mazda design and build vehicles with complete customer satisfaction in mind.

To help ensure enjoyable and trouble-free operation of your Mazda, read this manual carefully and follow its recommendations.

An Authorized Mazda Dealer knows your vehicle best. So when maintenance or service is necessary, that's the place to go.

Our nationwide network of Mazda professionals is dedicated to providing you with the best possible service.

We assure you that all of us at Mazda have an ongoing interest in your motoring pleasure and in your full satisfaction with your Mazda product.

Mazda Motor Corporation
HIROSHIMA, JAPAN

Important Notes About This Manual
Keep this manual in the glove box as a handy reference for the safe and enjoyable use of your Mazda. Should you resell the vehicle, leave this manual with it for the next owner.

All specifications and descriptions are accurate at the time of printing. Because improvement is a constant goal at Mazda, we reserve the right to make changes in specifications at any time without notice and without obligation.

Air Conditioning and the Environment
Your Mazda's genuine air conditioner is filled with HFC134a (R134a), a refrigerant that has been found not to damage the earth's ozone layer. If the air conditioner does not operate properly, consult an Authorized Mazda Dealer.

Please be aware that this manual applies to all models, equipment and options. As a result, you may find some explanations for equipment not installed on your vehicle.

©2002 Mazda Motor Corporation
Printed in Japan Sep. 2002(Print2)

How to Use This Manual

We want to help you get the most driving pleasure from your vehicle. Your owner's manual, when read from cover to cover, can do that in many ways.

Illustrations complement the words of the manual to best explain how to enjoy your Mazda. By reading your manual, you can find out about the features, important safety information, and driving under various road conditions.

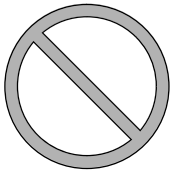

The above symbol in this manual means "Do not do this " or "Do not let this happen".

Index: A good place to start is the Index, an alphabetical listing of all information in your manual.

You'll find several WARNINGs, CAUTIONs, and NOTEs in the manual.

⚠ *WARNING*
A WARNING indicates a situation in which serious injury or death could result if the warning is ignored.

⚠ **CAUTION**
A CAUTION indicates a situation in which bodily injury or damage to your vehicle, or both, could result if the caution is ignored.

NOTE
A NOTE provides information and sometimes suggests how to make better use of your vehicle.

The above symbol, located on some parts of the vehicle, indicates that this manual contains information related to the part. Please refer to the manual for a detailed explanation.

Table of Contents

Your Vehicle at a Glance 1
Interior, exterior views and part identification of your Mazda.

Essential Safety Equipment 2
Use of safety equipment, including seats, seat belt system, SRS air bags and child-restraint systems.

Knowing Your Mazda 3
Explanation of basic operations and controls; opening/closing and adjustment of various parts.

Before Driving Your Mazda 4
Important information about driving your Mazda.

Driving Your Mazda 5
Explanation of instruments and controls.

Interior Comfort 6
Use of various features for drive comfort, including climate control and audio system.

In Case of an Emergency 7
Helpful information on what to do in an emergency.

Maintenance and Care 8
How to keep your Mazda in top condition.

Customer Information 9
Important consumer information including warranties and add-on equipment.

Specifications 10
Technical information about your Mazda.

Index 11

1 Your Vehicle at a Glance

Interior, exterior views and part identification of your Mazda.

Dashboard Overview 1- 2

Interior Overview 1- 3

Exterior Overview 1- 4

Dashboard Overview

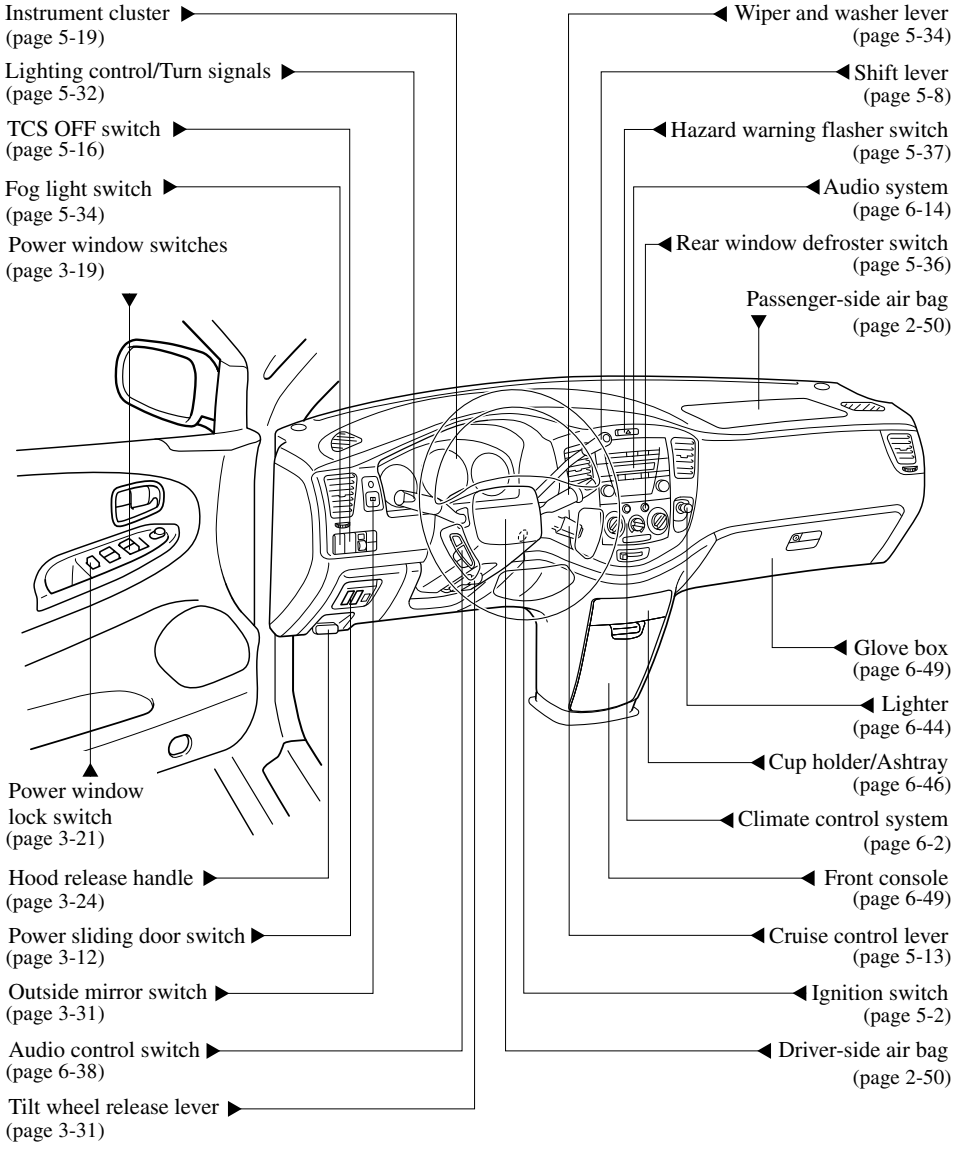

Interior Overview

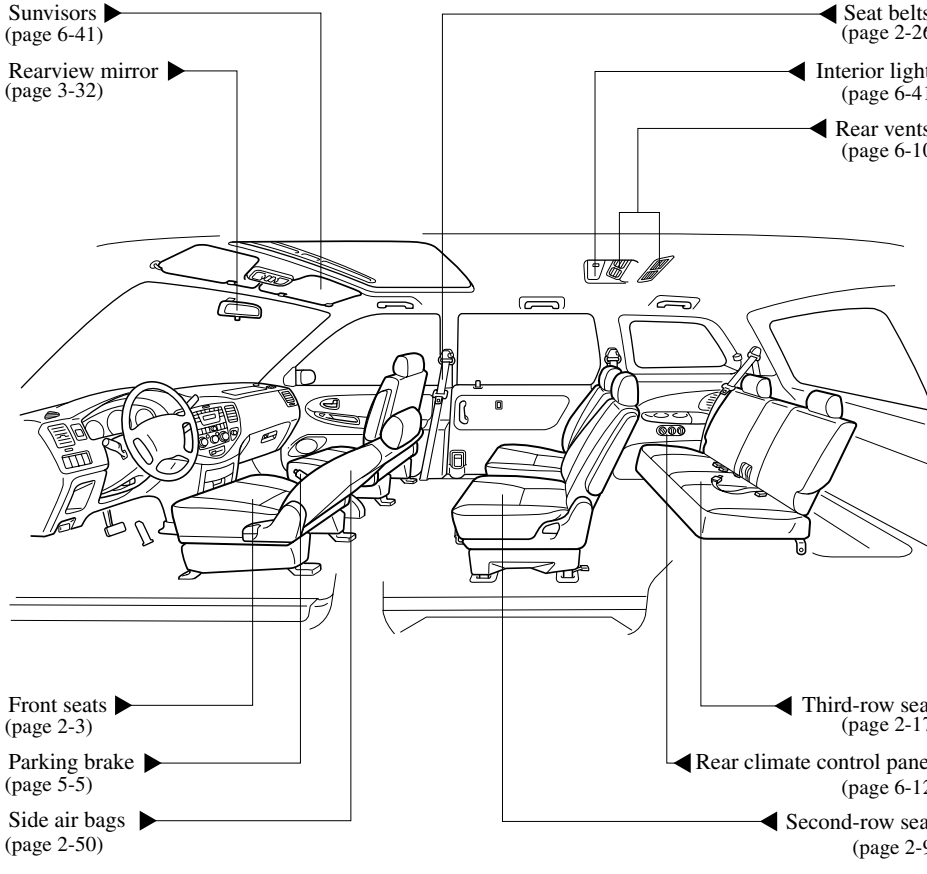

Exterior Overview

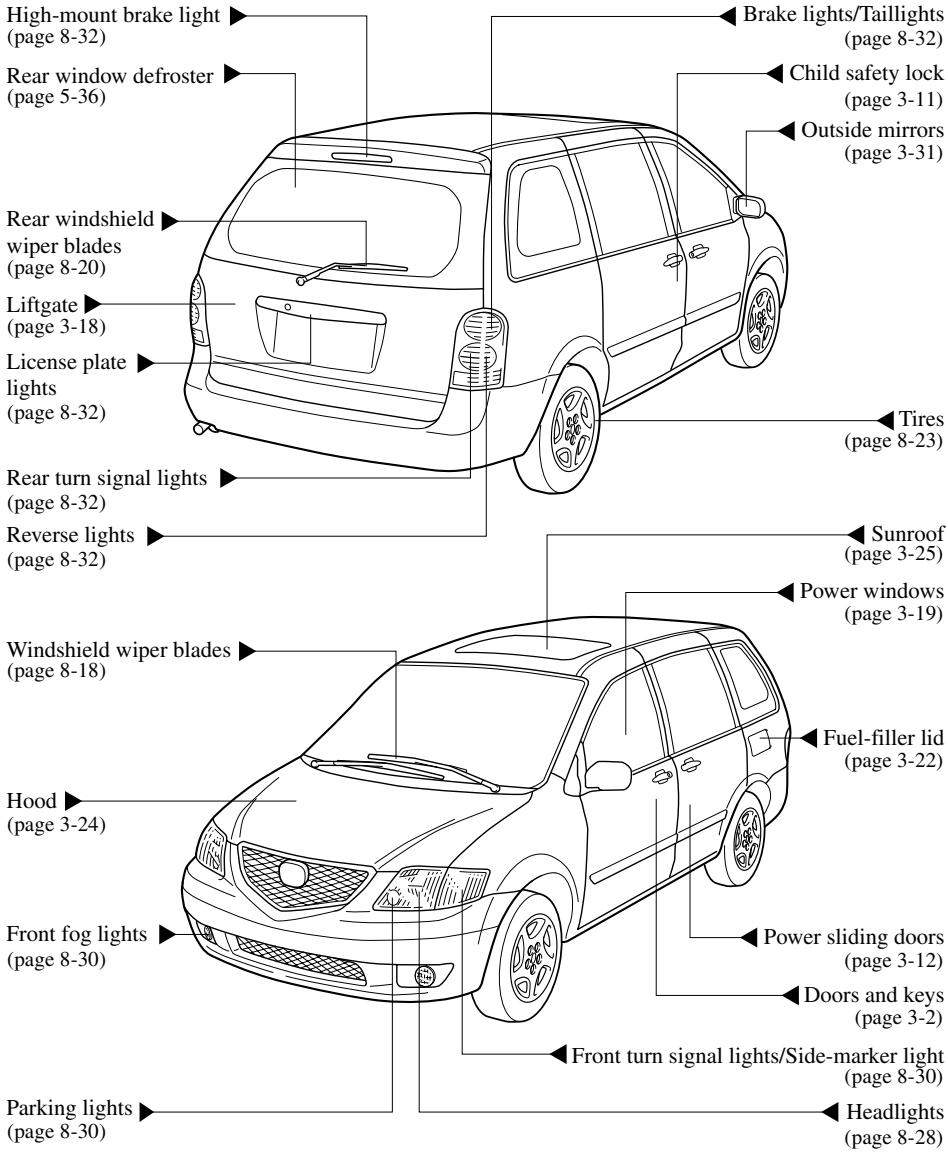

2 Essential Safety Equipment

Use of safety equipment, including seats, seat belt system, SRS air bags and child-restraint systems.

Seats 2- 2
Seat Arrangements 2- 2
Front Seats 2- 3
Second-Row Seats 2- 9
Third-Row Seat 2-17
Flat Folding 2-24

Seat Belt Systems 2-26
Seat Belt Precautions 2-26
3-Point Type Seat Belt 2-29
Front Seat Belt Pretensioner and Load Limiting Systems 2-31
2-Point Type Seat Belt 2-33
Seat Belt Extender 2-35
Seat Belt Warning Light 2-36
Seat Belt Warning Beep 2-36

Child Restraint 2-37
Child Restraint Precautions 2-37
Installing Child-Restraint Systems 2-40
LATCH Child-Restraint Systems 2-47

SRS Air Bags 2-50
Supplemental Restraint Systems (SRS) Precautions 2-50
Air Bag System Description 2-54

Seat Arrangements

Road positions (while driving)

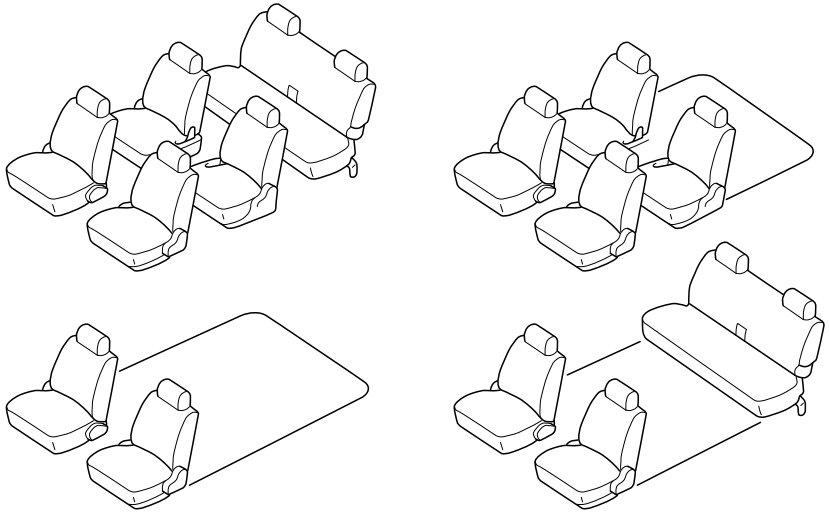

Non-road positions (Parking/Camping)

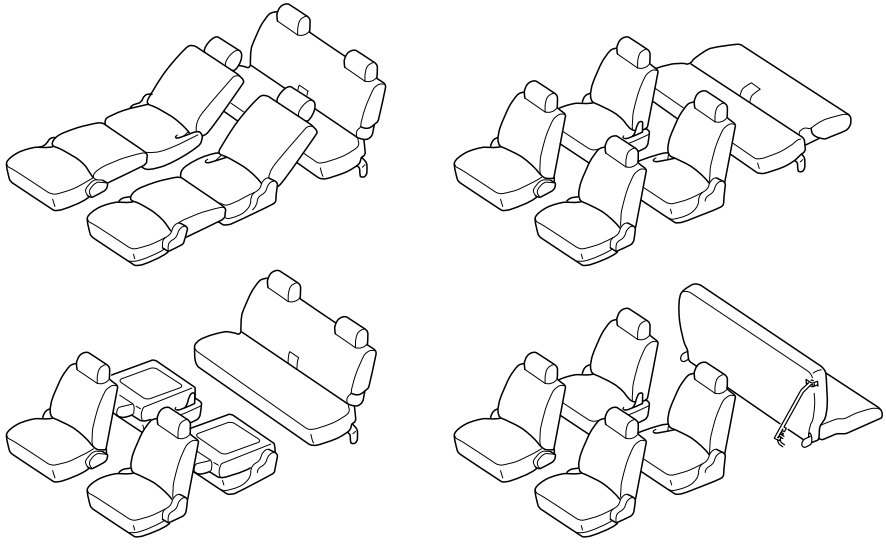

Front Seats

(Manually operated seats)

⚠ *WARNING*

Securing the Seats:
Adjustable seats and seatbacks that are not securely locked are dangerous. In a sudden stop or collision, the seat or seatback could move, causing injury. Make sure the adjustable components of the seat are locked in place by attempting to slide the seat forward and backward and rocking the seatback.

(Electrically operated seats)
The seat-bottom tilt, seat height, seat slide, and seat recline can be electrically adjusted. Move them to the desired positions by using the switch on the seat's lower side.

⚠ CAUTION

- The seat-bottom power adjust is operated by a motor. Avoid extended operation because excessive use can damage the motor.
- To prevent the battery from running down, avoid using the power adjust when the engine is stopped. The adjuster uses a great amount of electric power.
- Don't use the switch to make more than one adjustment at a time.

▼Seat Slide

(Manually operated seats)

⚠ *WARNING*

Driver's Seat Adjustment:
Adjusting the driver's seat while the vehicle is moving is dangerous. The driver could lose control of the vehicle and have an accident. Adjust the driver's seat only when the vehicle is stopped.

To move a seat forward or backward, raise the lever and slide the seat to the desired position and release the lever.

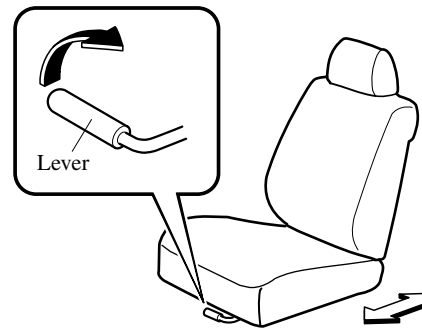

Make sure the lever returns to its original position and the seat is locked in place by attempting to push it forward and backward.

(Electrically operated seats)
To slide the seat, move the slide lifter switch on the outside of the seat to the front or back and hold it. Release the switch at the desired position.

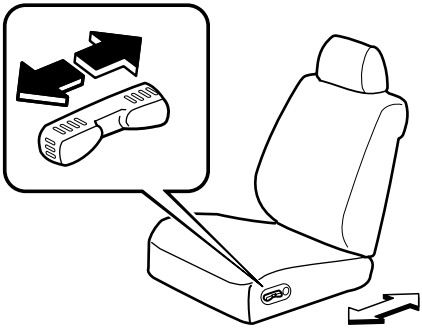

▼Seat Recline

⚠ *WARNING*

Reclining:
Sitting in a reclined position while the vehicle is moving is dangerous because you don't get the full protection from seat belts. During sudden braking or a collision, you can slide under the lap belt and suffer serious internal injuries. For maximum protection, sit well back and upright.

Unlocked Seatback:
A seatback plays an important role in your protection in a vehicle. Leaving the seatback unlocked is dangerous as it can allow passengers to be ejected or thrown around and baggage to strike occupants in a sudden stop or collision, resulting in severe injury. After adjusting the seatback at any time, even when there are no other passengers, rock the seatback to make sure it is locked in place.

(Manually operated seats)
To change the seatback angle, lean forward slightly while raising the lever. Then lean back to the desired position and release the lever.

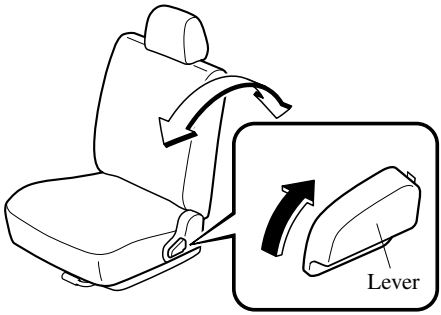

Make sure the lever returns to its original position and the seatback is locked in place by attempting to push it forward and backward.

⚠CAUTION

When returning a rear-reclined seatback to its upright position, make sure you support the seatback while operating the seatback lever. If the seatback is not supported, it will flip forward suddenly and could cause injury.

(Electrically operated seats)
Change the seatback angle by pressing the front or rear side of the reclining switch. When the seatback is at the desired angle, release the switch.

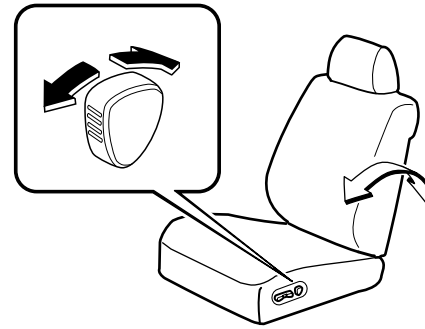

▼Seat Tilt (Driver's Seat)

(Manually operated seats)
The seat-bottom angle can be adjusted by rotating the dial.

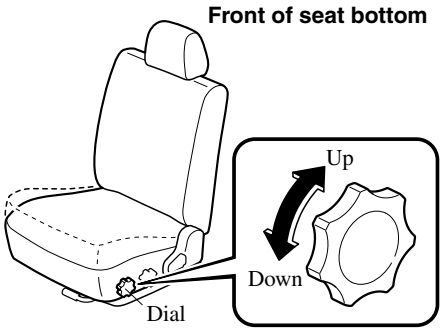

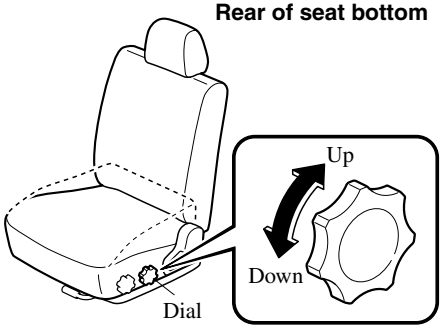

(Electrically operated seats)

Front height adjustment

To adjust the front height of the seat-bottom, raise or lower the front of the slide lifter switch on the left side of the seat.

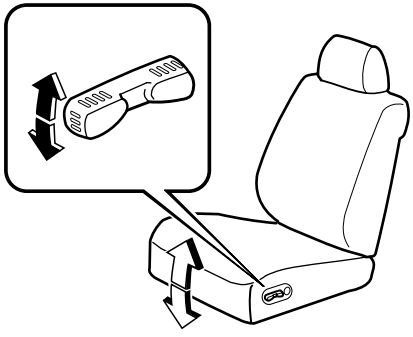

Rear height adjustment

Raise or lower the back of the switch to adjust the rear height of the seat-bottom.

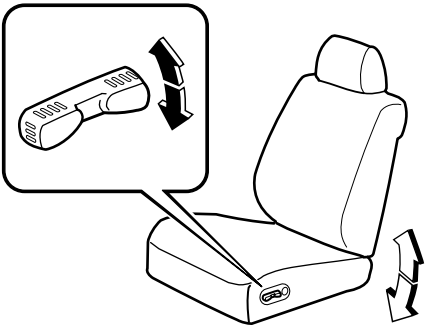

Height adjustment

Raise the seat-bottom by pulling up on the center of the switch. Release the switch at the desired position.

Lower the seat-bottom by pressing down on the center of the switch. Release the switch at the desired position.

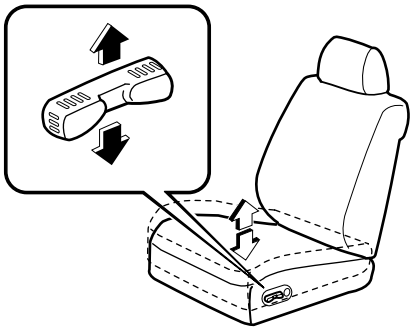

▼Head Restraint

⚠ *WARNING*

Head Restraints Adjustment:
Driving with the head restraints adjusted too low or removed is dangerous. With no support behind your head, your neck could be seriously injured in a collision. Always drive with the head restraints inserted when seats are being used and make sure they are properly adjusted.

Height adjustment

To raise a head restraint, pull it up to the desired position.
To lower the head restraint, press the stop-catch release, then push the head restraint down.

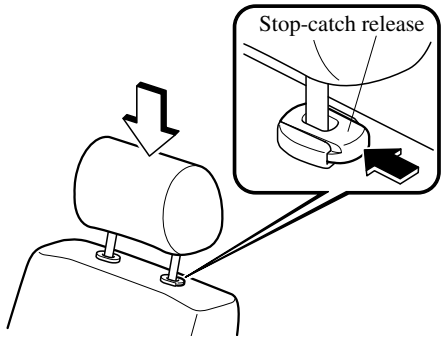

Adjust the head restraint so that the top is parallel with the top of the passenger's ears, never the passenger's neck.

Removal

To remove the head restraint, press the stop-catch release, then pull up on the head restraint.

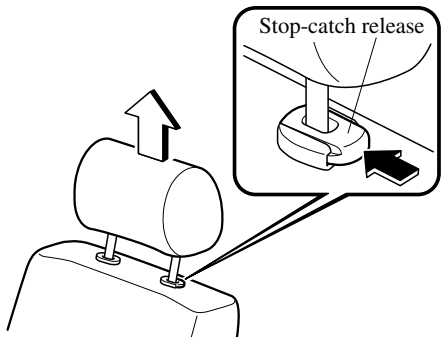

▼Front Passenger Seat Side Table

⚠ *WARNING*

Using Seat Side Table While Vehicle is Moving:
Using the seat side table while the vehicle is moving is dangerous. Hot liquids could cause scalding if spilled, or objects could fall causing injury. Do not use the seat side table while the vehicle is moving.

Adjusting Front Passenger Seat While Seat Side Table is in Use:
Adjusting the front passenger seat forward or rearward while the seat side table is in use is dangerous Hot liquids could cause scalding if spilled, or objects could fall causing injury. Do not adjust the front passenger seat while the seat side table is in use.

The pull-up table on the side of the front passenger seat is collapsible. The table can be used when the vehicle is safely parked.
Pull up the table to use it. After pulling the table up, push the table downward and verify that it is locked.

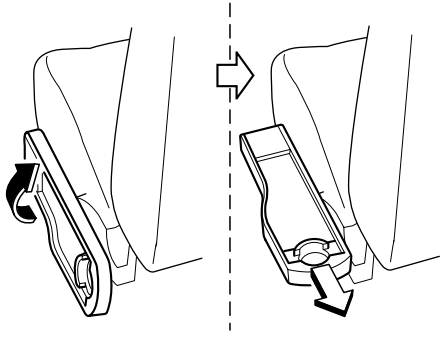

NOTE

The table can be expanded rearward by pulling out the rear end.

When collapsing the table, pull the lever under the table. After the table is collapsed, press the table surface to lock it in place.

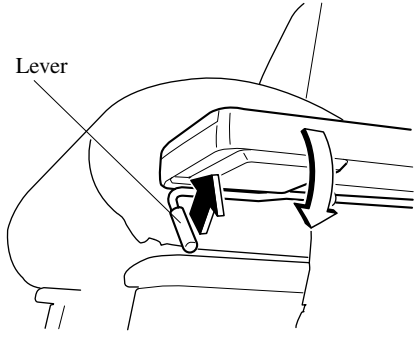

▼Armrest

The armrest can be used or placed upright.

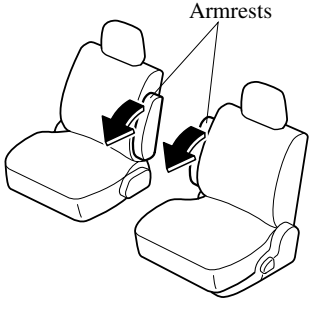

⚠ WARNING

Positioning the Shoulder Belt Over the Armrest:
Positioning the shoulder portion of a front seat belt over the armrest is dangerous as it cannot provide adequate protection in a collision and could result in serious injuries. Never position the shoulder portion of a front seat belt over the armrest.

Second-Row Seats

⚠ WARNING

Stacking Cargo:
Stacking luggage or other cargo higher than the seatback is dangerous. During a sudden stop or collision, objects can become projectiles that could hit and injure passengers. Don't stack things higher than the seatback.

Securing Seats:
Adjustable seats and seatbacks that are not securely latched are dangerous. In a sudden stop or collision, the seat or seatback could move, causing injury. Make sure the adjustable components of the seat are locked in place by attempting to slide the seat forward and backward and rocking the seatback.

Seat Adjustment:
Adjusting the seat while the vehicle is moving is dangerous. Sudden braking or a collision could cause serious injury. Adjust the seat only when the vehicle is stopped.

⚠ WARNING

Unlocked Seatback:
A seatback plays an important role in your protection in a vehicle. Leaving the seatback unlocked is dangerous as it can allow passengers to be ejected or thrown around and baggage to strike occupants in a sudden stop or collision, resulting in severe injury. After adjusting the seatback at any time, even when there are no other passengers, rock the seatback to make sure it is locked in place.

Passenger on the Folded Seatback:
Driving with a passenger on the folded seatback is dangerous. Allowing a child to sit up on the folded seatback while the vehicle is moving is particularly dangerous. During sudden braking or even a minor collision, a child not in a proper seat or child-restraint system and seat belt could be thrown forward, back or even out of the car resulting in serious injuries or death. The child or other objects in the baggage area could be thrown into other occupants and cause serious injury. Never allow a passenger to sit or stand on the folded seatback while the vehicle is moving.

NOTE

When returning a second-row seat to its original position, also replace the seat belt to its normal position. Verify that the seat belt pulls and retracts.

▼Seat Slide

To move the seat forward or backward, raise the lever and slide the seat to the desired position.

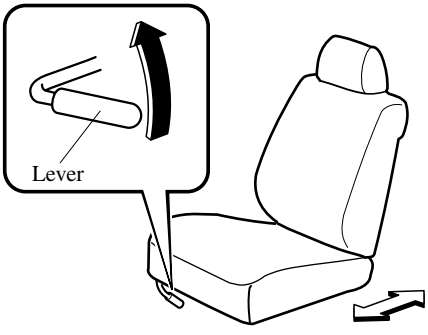

Make sure the lever returns to its original position and the seat is locked in place by attempting to push it forward and backward.

▼Side-Sliding Seat (right side)

The second-row seats can be put together and used as a bench seat. Raise the side seat-slide lever and slide the seat sideways.

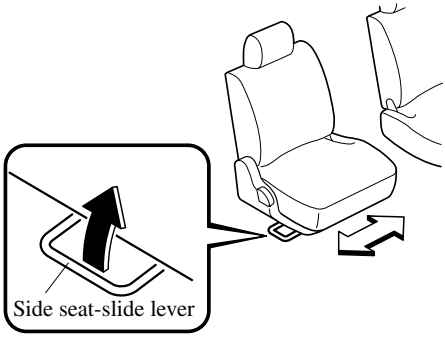

Make sure the lever returns to its original position and the seat is locked in place by attempting to push it from side to side.

▼Seat Recline

⚠WARNING

Reclining:
Sitting in a reclined position while the vehicle is moving is dangerous because you don't get the full protection from seat belts. During sudden braking or a collision, you can slide under the lap belt and suffer serious internal injuries. For maximum protection, sit well back and upright.

Reclining the Second-Row Seatback:
Reclining the second-row seatback when the third-row seat is occupied is dangerous. The second-row seatback may hit and injure the occupants in the third-row seat. Don't recline the second-row seatback when the third-row seat is occupied.

To change the seatback angle, lean forward slightly while raising the lever. Then lean back to the desired position and release the lever.

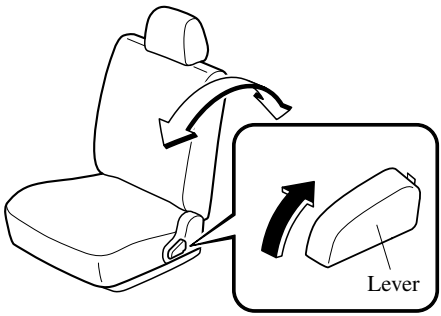

Make sure the lever returns to its original position and the seatback is locked in place by attempting to push it forward and backward.

⚠CAUTION

When returning a rear-reclined seatback to its upright position, make sure you support the seatback while operating the seatback lever. If the seatback is not supported, it will flip forward suddenly and could cause injury.

▼Head Restraint

⚠WARNING

Head Restraints Adjustment:
Driving with the head restraints adjusted too low or removed is dangerous. With no support behind your head, your neck could be seriously injured in a collision. Always drive with the head restraints inserted when seats are being used and make sure they are properly adjusted.

Height adjustment

To raise a head restraint, pull it up to the desired position.
To lower the head restraint, press the stop-catch release, then push the head restraint down.

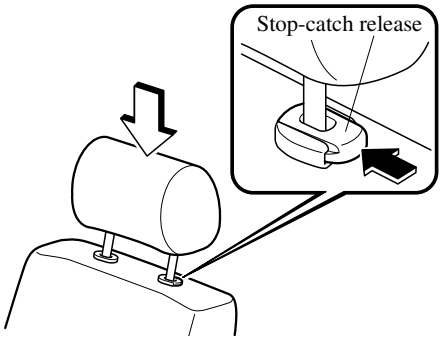

Adjust the head restraint so that the top is parallel with the top of the passenger's ears, never the passenger's neck.

Removal

To remove the head restraint, press the stop-catch release, then pull up on the head restraint.

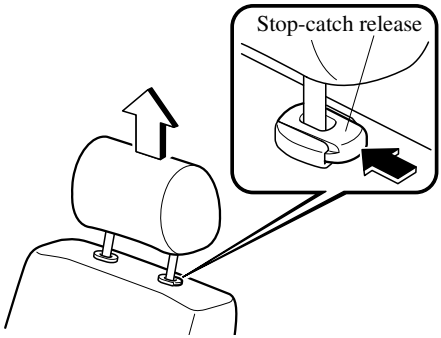

▼Armrest

The armrest can be used or placed upright.

Type A

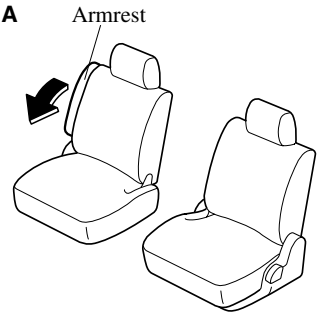

Type B

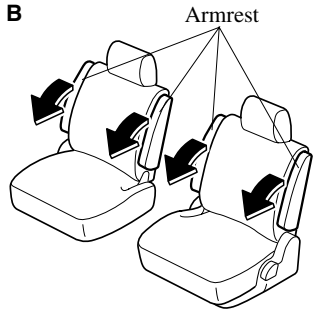

▼Third-Row Seat Access

Access to the third-row seat via the sliding door

When the second-row seats are together, move along the path between the sliding door and the side sliding seat.

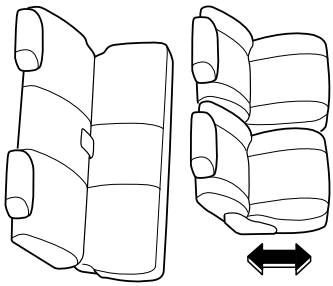

When the second-row seats are separated, pass between them and move to the rear of the vehicle.

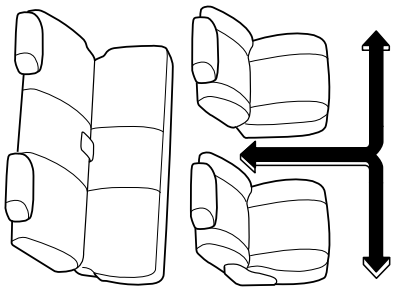

▼Folding the Second-Row Seats

⚠ *WARNING*

Using Folded Seatback as a Table While the Vehicle is Moving:
Using the folded seatback as a table while driving is dangerous. During sudden braking or a collision, objects placed on the folded seatback could become projectiles that could hit and injure someone. Never use the folded seat as a table while the vehicle is moving.

The second-row seatbacks can be folded down and used as tables when the vehicle is not moving.

To fold the seatback

1. Put the buckle in the pocket of the seat bottom.

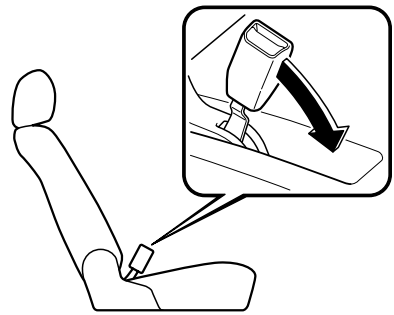

⚠ CAUTION

Lowering the seatback without stowing the seat belt buckle could damage the seatback.

2. Raise the reclining lever and lower the seatback forward. Make sure the seatback is locked.

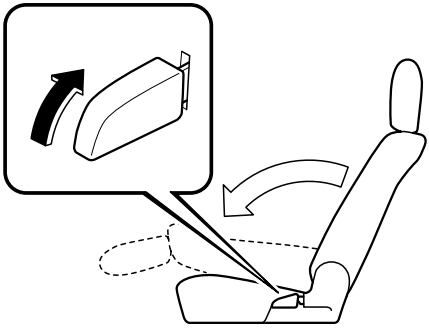

To return the seatback to the upright position

Raise the reclining lever and lift the seatback upright. Attempt to move the seatback forward and backward to make sure it is locked.

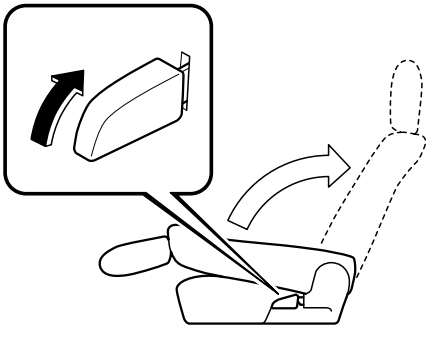

▼ Removal of Second-Row Seats

The second-row seats can be removed to create a more comfortable space between the third-row and front seats. Additional cargo space is available with the removal of the second-row seats and stowing of the third-row seat.

⚠ *WARNING*

Seat Removal or Installation While Vehicle is Moving or on a Slope:
Removing or installing the second-row seats while the vehicle is moving or on a slope is dangerous. The seats are heavier than they appear and could suddenly detach causing serious injury. Remove or install the seats with the vehicle parked on a level surface.

Riding on the Floor Space:
Riding on the floor space created by the removal of the second-row seat is dangerous. Sudden braking or a collision could cause serious injury. Do not sit or lie in the floor space for the second-row seat while the vehicle is moving. Never ride in a vehicle where you can't sit in the seat and wear the seat belt.

Pinching Fingers or Hands:
Placing your hands around the seat anchors when removing or installing the second-row seats is dangerous. You could pinch your hands or fingers between the seat anchor and the seat. Hold the edge of the seat when lowering it into place. Never place your hands between the seat anchor and the seat.

⚠ WARNING

Lifting the Seat-Anchor Bar:
Lifting the seat-anchor bar without firmly supporting the seat with your hand is dangerous. Lifting the seat unlocks the front clamps automatically and could cause the seat to fall. Support the seat firmly while lifting the seat-anchor bar.

To remove the seat

1. Put the buckle in the pocket of the seat bottom.

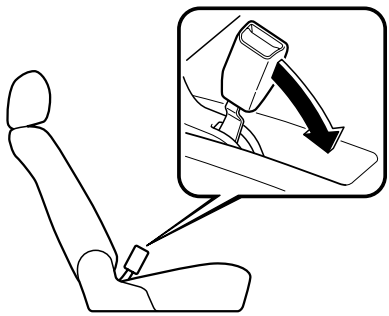

⚠ CAUTION

Lowering the seatback without stowing the seat belt buckle could damage the seatback.

2. Lower the head restraint all the way down.
3. Slide the seat all the way back.
4. Raise the reclining lever and lower the seatback forward.
   Make sure the seatback is locked.

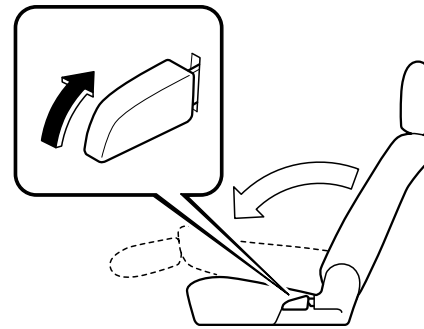

5. Work only on one seat at a time to avoid one seat falling while working on another.
6. Lift and hold the seat-anchor bar and raise the entire seat up and forward.

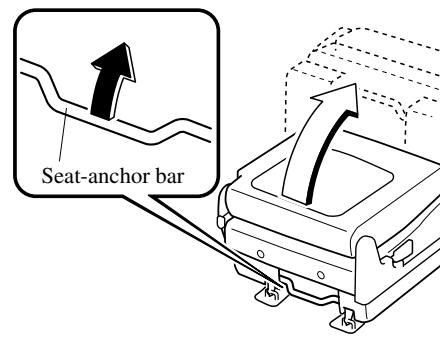

7. The seat is heavier than it looks, carefully pull up and detach the seat. Get assistance to lift it out of the vehicle.

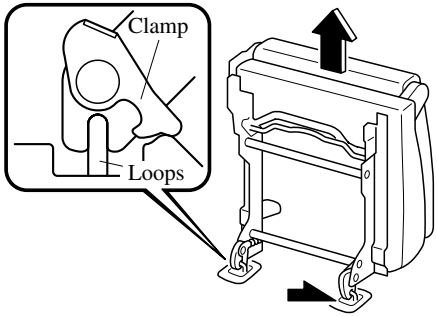

To install the seat

1. First identify which seat fits which position by verifying that the seat belt buckles point to the center (inboard) of the vehicle.
2. Align the clamps on the front underside of the seat with the forward loop anchors on the floor and support the seat so that it doesn't fall (the rear portion of the seat cannot be mounted first). The clamps on the front of the seat automatically lock into the floor loop anchors after lowering the seat.

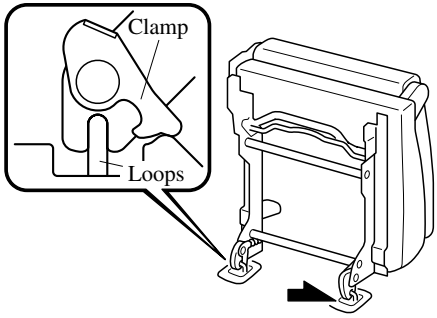

3. Supporting the seat with your hands, slowly lower the seat rearwards to lock it in place.

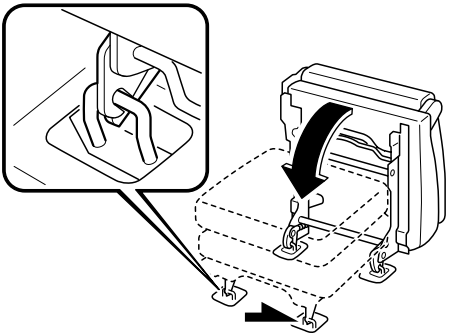

4. Raise the reclining lever and lift the seatback upright. Attempt to move the seatback forward and backward to make sure it is locked.
5. Buckle the seat belts once just to confirm the seat belt buckles are inboard which means each seat is on the correct side of the vehicle.

⚠ *WARNING*

Unsecured Seat:
Driving with the seat unsecured is dangerous. The seat may become detached while the vehicle is moving causing serious injury. After installing the seat, push it forward and backward to make sure it is securely locked.

⚠ CAUTION

Do not move the side seat-slide lever with the seat removed. The lever could be damaged resulting in loss of functionality.

Third-Row Seat

⚠ WARNING

Stacking Cargo:
Stacking luggage or other cargo higher than the seatback is dangerous. During a sudden stop or collision, objects can become projectiles that could hit and injure passengers. Don't stack things higher than the seatback.

Securing Seats:
Adjustable seats and seatbacks that are not securely latched are dangerous. In a sudden stop or collision, the seat or seatback could move, causing injury. Make sure the adjustable components of the seat are locked in place by attempting to rock the seatback.

Unlocked Seatback:
A seatback plays an important role in your protection in a vehicle. Leaving the seatback unlocked is dangerous as it can allow passengers to be ejected or thrown around and baggage to strike occupants in a sudden stop or collision, resulting in severe injury. After adjusting the seatback at any time, even when there are no other passengers, rock the seatback to make sure it is locked in place.

NOTE

When returning a third-row seat to its original position, also replace the seat belt to its normal position. Verify that the seat belt pulls and retracts.

▼Seat Recline

⚠ WARNING

Reclining:
Sitting in a reclined position while the vehicle is moving is dangerous because you don't get the full protection from seat belts. During sudden braking or a collision, you can slide under the lap belt and suffer serious internal injuries. For maximum protection, sit well back and upright.

To change seatback angle, lean forward slightly while pulling the flat-folding strap. Then lean back to the desired position and release the strap. Make sure the seat is securely latched.

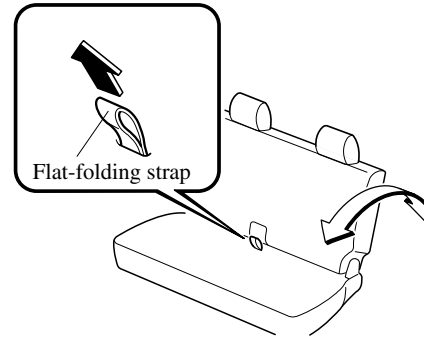

▼Head Restraint

⚠ WARNING

Head Restraints Adjustment:
Driving with the head restraints adjusted too low or removed is dangerous. With no support behind your head, your neck could be seriously injured in a collision. Always drive with the head restraints inserted when seats are being used and make sure they are properly adjusted.

Height adjustment

To raise a head restraint, pull it up to the desired position.
To lower the head restraint, press the stop-catch release, then push the head restraint down.

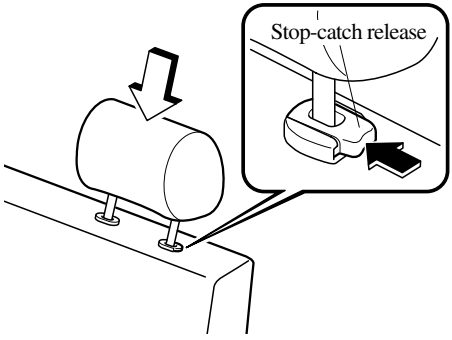

Adjust the head restraint so that the top is parallel with the top of the passenger's ears, never the passenger's neck.

Removal

To remove the head restraint, press the stop-catch release, then pull up on the head restraint.

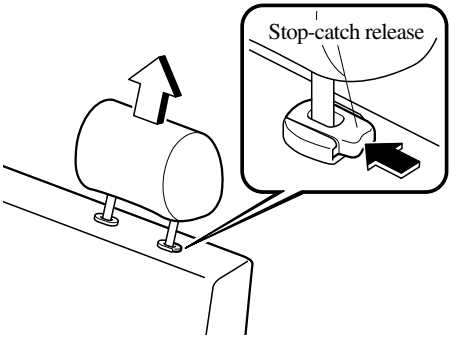

▼Folding the Third-Row Seat

⚠ WARNING

Riding on Folded Flat Third-Row Seat:
Riding on the third-row seat when it's folded is dangerous. During sudden braking or a collision, passenger's could be thrown around inside the vehicle and seriously injured. Always ride with the third-row seat in the forward-facing, upright position and seat belt securely fastened.

1. Remove the head restraints from the third-row seat (page 2-18).

2. Pull the third-row seat's flat-folding strap and push the seatback down until it locks.

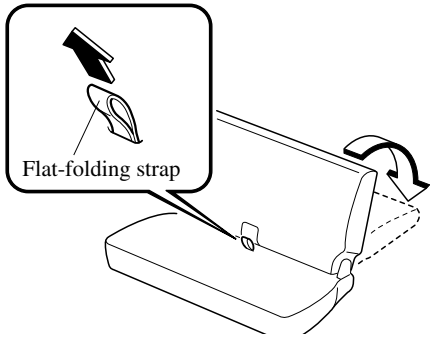

▼Stowing the Third-Row Seat

More storage space can be created by folding away the third-row seat into the rear seat well. With the second-row seats removed and the third-row seat stowed, even more space is available.

⚠ *WARNING*

Riding in the Seat Well:
Riding in the seat well for the third-row seat is dangerous. Sudden braking or a collision could cause serious injury. Do not sit on lie in the seat well while the vehicle is moving. Never ride in a vehicle where you can't sit in the seat and wear the seat belt.

Pinching Fingers or Hands:
Placing your hands around the seat stowage well when stowing the third-row seat is dangerous. You could pinch your hands or fingers between the seat and the well. Hold the handle when lowering the seat into place. Never place your hands between the seat and the seat well.

Unlocked Seatback:
An unlocked seatback is dangerous. While stowing the seat, the seatback could suddenly move causing serious injury. Push the seatback forward and backward to make sure it is locked in place.

NOTE

Remove any items from the seat well for the third-row seat before stowing the seat. Anything in the baggage area when the seat is set into the well can damage the seatback material and prevent a flat cargo area.

Stowing the third-row seat

1. Insert the seat belts in the retainers.

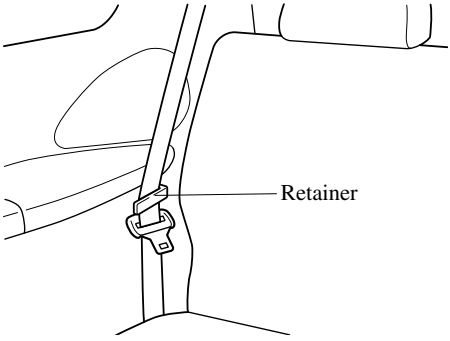

2. Remove the head restraint and set them aside temporarily (page 2-18).
3. Pull strap A and ease the seatback toward the front of the vehicle with your other hand and be sure it locks with a click.

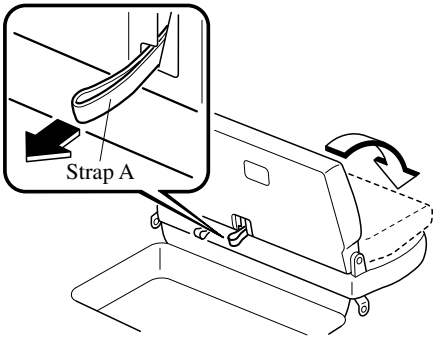

4. Pull strap B and lift the combined seatback and seat bottom up to vertical with your other hand. Gently set the seat the remainder of the way down into the seat well.

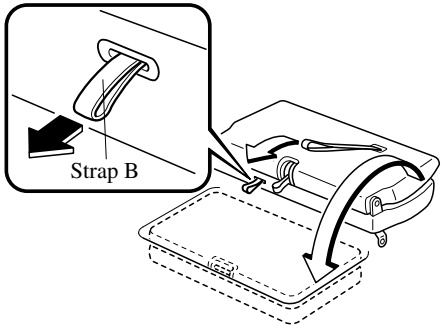

5. Insert the head restraints between the floor and seat at the positions indicated on the labels.

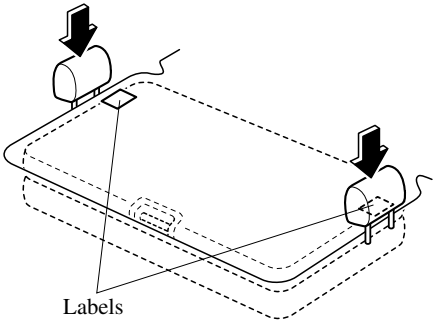

Raising the third-row seat upright for road use

1. Clear the entire cargo floor.
2. Remove the head restraints.

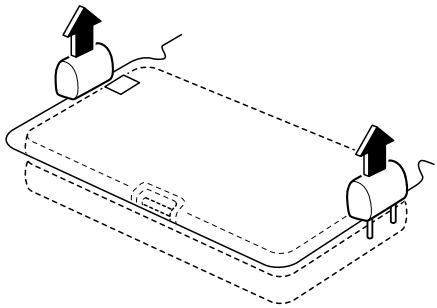

3. Carefully reverse the procedures used to lower the seat into the seat well. Use the handle and ease the combined seatback and seat bottom up to vertical.
4. Carefully lower the seat forward and make sure it's latched to the floor.

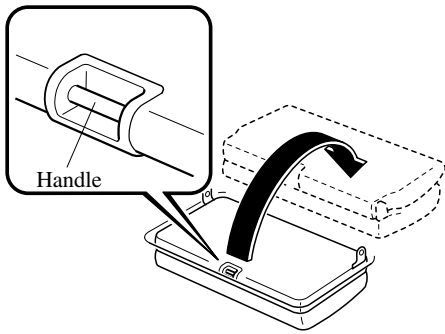

5. Pull strap A and raise the seatback upright. Attempt to move the seatback forward and backward to make sure it is locked.

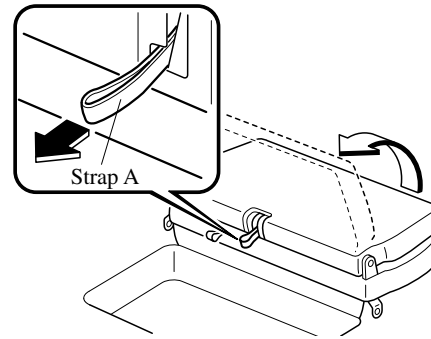

6. Insert the head restraints.
7. Place the seat belt buckles face up.

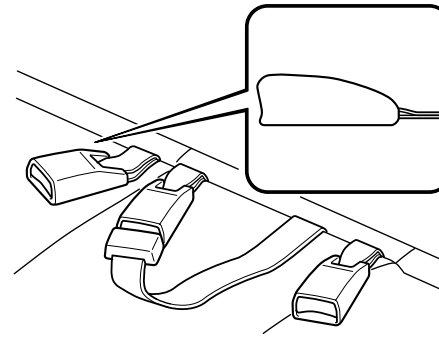

▼Third-Row Seat and Open Liftgate Position

⚠ *WARNING*

Rear Facing Third-Row Seat and a Moving Vehicle:
Driving with the third-row seat facing rearward is dangerous because the liftgate cannot be securely closed. During sudden braking or a collision, passengers could be thrown out of the vehicle resulting in serious injury or death. Place the third-row seat in the forward-facing position with the seatback upright before driving the vehicle.

Support Bar:
Sitting in the rear-facing, third-row seat position without installing the support bar is dangerous. Without the support of the bar, the seatback could collapse resulting in injury.
Always install the support bar before sitting in the rear-facing, third-row seat position.

Third-Row Seat and the Flat-Folding Strap:
Pulling the flat-folding strap with the third-row seat facing rearward is dangerous. The seatback will collapse into the seat bottom and could result in injury. Do not pull the flat-folding strap with the third-row seat facing rearward.

NOTE

- Adjust the seatback to the upright position when the third-row seat is facing rearward.
- Remove cargo from the seat well area before placing the third-row seat in the rear-facing position.

To put the third-row seat in the rear facing position:

1. Open the liftgate.
2. Clear away all cargo from the seat well.
3. Remove the head restraints.
4. Pull strap B while supporting the seatback with the other hand and carefully ease the seatback rearward and into the seat well.

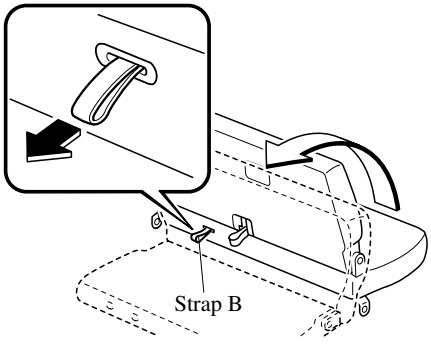

5. Go inside the vehicle and to the rear.

6. Remove the support bar from the pocket.

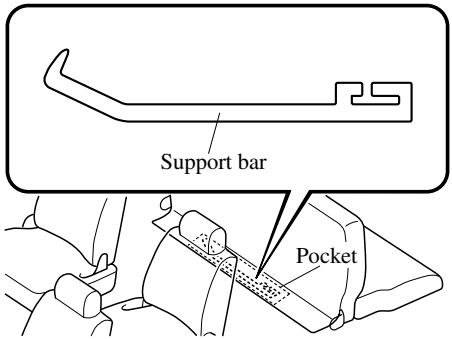

7. Set the hook on the support bar in the rear of the seatback.

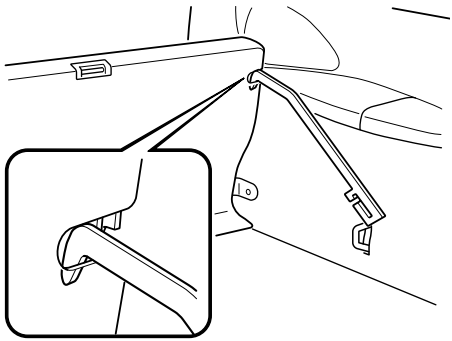

8. Pull the seatback towards the front of the vehicle until the opposite end of the support bar hooks onto the anchor loop in the side trim. Attempt to push the seatback towards the rear (liftgate) to make sure the support bar is securely latched.

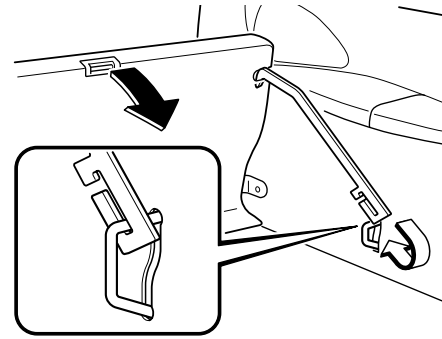

To return the third-row seat to the road position (forward facing)

1. Detach the support bar by following the reverse procedure for installation.
2. From inside the vehicle, carefully lower the seat towards the front until it locks in place. Attempt to move the seat forward and backward to make sure it's securely locked in place.

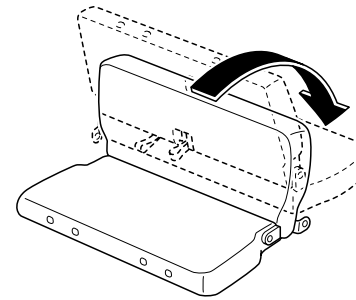

3. Reinsert the head restraints.

4. Place the seat belt buckles face up.

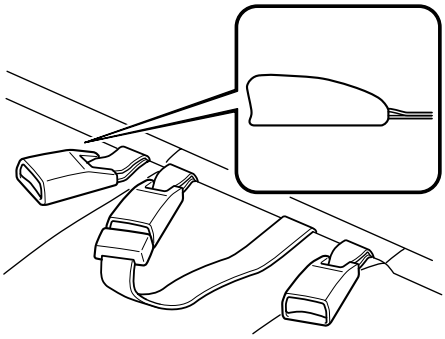

Flat Folding

The second-row and front seats can be folded down for use as beds when the vehicle is safely parked.

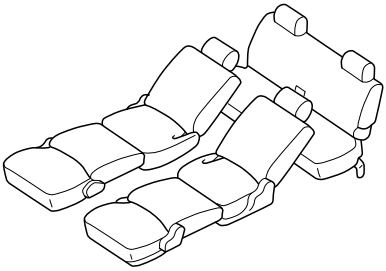

⚠ *WARNING*

Folded-Flat Seats:
Sitting or lying on seats folded flat is a dangerous way to ride. During sudden braking or a collision you could be thrown around inside the vehicle and seriously injured. Don't ride on seatbacks folded flat.

▼ To Fold the Seats Flat

1. Pull the seat slide levers and slide the second-row seats all the way back (page 2-10).
2. Raise the recline levers and fold down the second-row seatbacks rearward until they lock (page 2-11).
3. Remove the head restraints from the front seats (page 2-7).
4. Pull the seat slide levers and slide the front seats all the way forward (page 2-3).

5. Raise the recline levers and fold down the front seatbacks rearward until they lock (page 2-4).

To return the seats to their road positions, reverse the procedures for folding the second-row and front seats flat.

Seat Belt Precautions

Seat belts help to decrease the possibility of severe injury during accidents and sudden stops. Mazda recommends that the driver and all passengers always wear seat belts.

All of the outboard seat belt retractors are designed to keep the lap/shoulder belts out of the way when not in use.

The driver's seat belt has no provisions for child-restraint systems and has only an emergency locking mode. The driver may wear it comfortably, and it will lock during a collision.

However, the front passenger's seat and rear outboard lap/shoulder belt retractors operate in two modes: emergency locking mode, and for child-restraint systems, automatic locking mode.

The third-row center seat positions have a lap belt with manual adjustment.

⚠ *WARNING*

Not Wearing Seat Belts:
Not wearing a seat belt is extremely dangerous. During a collision, occupants not wearing seat belts could hit someone or things inside the vehicle or even be thrown out of the vehicle. They could be seriously injured or even killed. In the same collision, occupants wearing seat belts would be much safer. Always wear your seat belt and make sure all occupants are properly restrained.

Seat Belt Damaged During an Accident:
Using a damaged seat belt is dangerous. An accident could damage the belt webbing of the seat belt in use. A damaged seat belt cannot provide adequate protection in a collision. Have an Authorized Mazda Dealer inspect all seat belt systems in use during an accident before they are used again.

Twisted Seat Belts:
Twisted seat belts are dangerous. In a collision, the full width of the belt isn't available to absorb the impact. This puts more force on the bones beneath the belt, which could break them or cause other serious injury or death. Don't wear twisted seat belts.

One Belt, One Passenger:
Using one seat belt for more than one person at a time is dangerous. A seat belt used in this way can't spread the impact forces properly and the two passengers could be crushed together and seriously injured or even killed. Never use one belt for more than one person at a time.

⚠CAUTION

Belt retraction may become difficult if the belts and rings are soiled, so try to keep them clean.

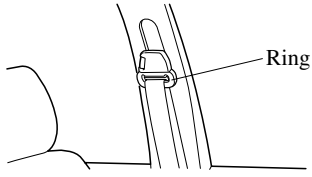

▼Pregnant Women and Persons with Serious Medical Conditions

Pregnant women should wear seat belts. Ask your doctor for specific recommendations.
The lap belt should be worn SNUGLY AND AS LOW AS POSSIBLE OVER THE HIPS.
The shoulder belt should be worn across your shoulder properly, but never across the stomach area.
Persons with serious medical conditions also should wear seat belts. Check with your doctor for any special instructions regarding specific medical conditions.

▼Emergency Locking Mode

If the belt has fully retracted, it will always be in the emergency locking mode until you move it into automatic locking mode by pulling the belt all the way out to its full length. In the emergency locking mode, the belt remains comfortable on the occupant and the retractor will lock in position during a collision.
If the belt feels tight and hinders comfortable movement while the vehicle is stopped or in motion, you may be in the automatic locking mode because you have pulled the belt too far out. To return to the more comfortable emergency locking mode, wait until you can stop the vehicle in a safe area, retract the belt fully to convert it back to emergency locking mode and then again extend it around you.

▼ Automatic Locking Mode

Always use the automatic locking mode to keep the child-restraint system from shifting to an unsafe position in the event of an accident. To get the seat belt into the automatic locking mode, pull it all the way out and connect it as instructed on the child-restraint system. It will retract down to the child-restraint system and stay locked on it. See the section on child restraint (page 2-37).

3-Point Type Seat Belt

▼Fastening the Seat Belts

1. Grasp the buckle and tongue.
2. Slowly pull out the lap/shoulder belt.

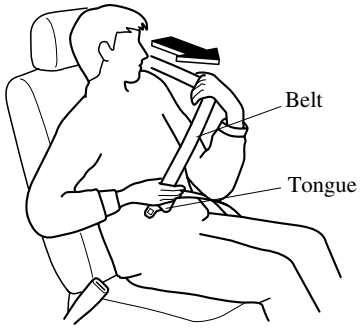

3. Insert the tongue into the buckle until you hear a click.

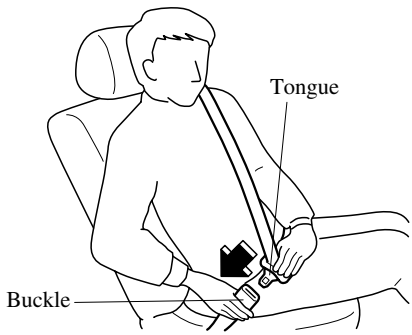

⚠ *WARNING*

Positioning the Shoulder Portion of the Seat Belt:
Improper positioning of the shoulder portion of the seat belt is dangerous. An improperly positioned belt will provide little or no protection in a collision. Always make sure the shoulder portion of the seat belt is positioned across your shoulder and near your neck, but never under your arm, on your neck, or on your upper arm.

4. Make sure the shoulder belt is snugly fitted against your body.

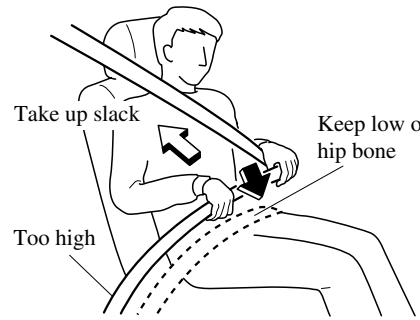

⚠ *WARNING*

Positioning the Lap Portion of the Seat Belt:
The lap portion of the seat belt worn too high is dangerous. In a collision, this would concentrate the impact force directly on the abdominal area, causing serious injury. Wear the lap portion of the belt snugly and as low as possible.

▼Unfastening the Seat Belts

Depress the button on the buckle.

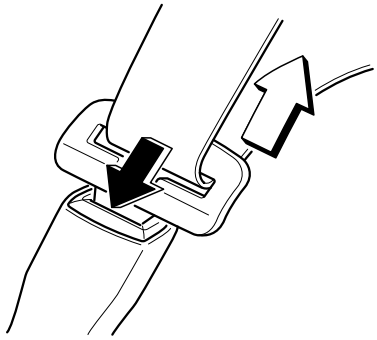

NOTE
If a belt does not fully retract, inspect it for kinks and twists.

To secure the outboard-rear seat belts when not in use, insert the belts in their seat belt retainers.

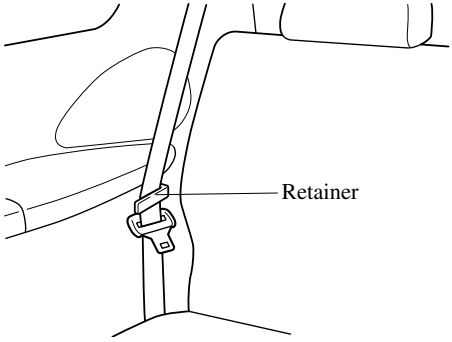

▼Shoulder Belt Adjuster

Adjust the height of the shoulder belt if the seat belt touches your neck, or if it crosses your arm instead of your shoulder. To raise the shoulder belt adjuster, push the adjuster up. To lower the shoulder belt adjuster, push the button and slide it down. Make sure the adjuster is locked.

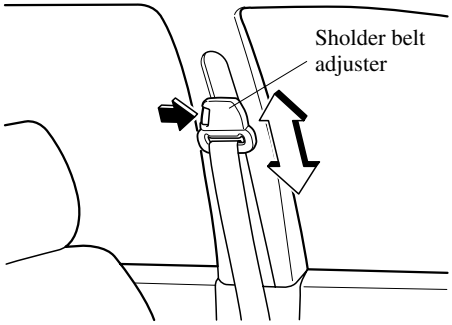

⚠ *WARNING*

<u>Positioning the Shoulder Portion of the Seat Belt:</u>
Improper positioning of the shoulder portion of the seat belt is dangerous. An improperly positioned belt will provide little or no protection in a collision. Always make sure the shoulder portion of the seat belt is positioned across your shoulder and near your neck, but never under your arm, on your neck, or on your upper arm.

Front Seat Belt Pretensioner and Load Limiting Systems

For optimum protection, the driver and front passenger seat belts are equipped with pretensioner and load limiting systems.
In moderate or greater frontal or near-frontal accidents, the front air bag and pretensioner systems deploy simultaneously. The pretensioners take up slack in the front seat belts as the air bags are expanding. The load limiting system releases belt webbing in a controlled manner to reduce belt force on the occupant's chest.

⚠ *WARNING*

Incorrect Positioning of the Driver and Front Passenger Seat Belts:
Incorrect positioning of the driver and passenger seat belts is dangerous. Without proper positioning, the pretensioner and load limiting systems cannot provide adequate protection in an accident and this could result in serious injury. Wear seat belts only as recommended in this owner's manual.

Expended Seat Belt Pretensioners:
Use of front seat belts with the pretensioner system expended is dangerous.
The seat belt pretensioners will only function once. After they are expended, they will not work again and must be replaced immediately, even if there was no front seat occupant seated at the time.
If the seat belt pretensioners are not replaced, the risk of injury in a collision will increase.
Always have an Authorized Mazda Dealer inspect and replace the seat belt pretensioners after a collision.

⚠ WARNING

Modification or Testing of the Pretensioner System:
Modifying the components or wiring of the pretensioner system, including the use of electronic testing devices is dangerous. You could accidentally activate it or make it inoperable which would prevent it from activating in an accident. The occupants could be seriously injured. Never modify the components or wiring, or use electronic testing devices on the pretensioner system.

Pretensioner System Disposal:
Improper disposal of the pretensioner system or a vehicle with non-deactivated pretensioners is dangerous. Unless all safety procedures are followed, injury could result. Ask an Authorized Mazda Dealer how to safely dispose of the pretensioner system or how to scrap a pretensioner-equipped vehicle.

NOTE

- The pretensioner system will only activate in a moderate or greater frontal or near-frontal collision. It will not activate in side or rear impacts.
- Some smoke (non-toxic gas) will be released when the air bags and pretensioners deploy. This does not indicate a fire. This gas normally has no effect on occupants, however, those with sensitive skin may experience light skin irritation. If residue from the deployment of the air bags or the front pretensioner system gets on the skin or in the eyes, wash it off as soon as possible.

▼ Air Bag/Front Seat Belt Pretensioner Systems Warning Light

If the air bag/front seat belt pretensioner system is OK, the warning light comes on when the ignition switch is turned to the ON position or after the engine is cranked. After about 6 seconds it goes out.

A system malfunction is indicated when the warning light constantly flashes, stays on or doesn’t come on at all. If any of these occur, consult an Authorized Mazda Dealer as soon as possible. The system may not work in an accident.

⚠ WARNING

Self-Servicing the Air Bag/ Pretensioner Systems:
Self-servicing or tampering with the systems is dangerous. An air bag/ pretensioner could accidentally activate or become disabled. This could cause serious injuries. Never tamper with the systems and always have an Authorized Mazda Dealer perform all servicing and repairs.

2-Point Type Seat Belt

▼ Fastening the Seat Belt

1. Pull the tongue to the desired length.
2. Insert it into the buckle until you hear a click.

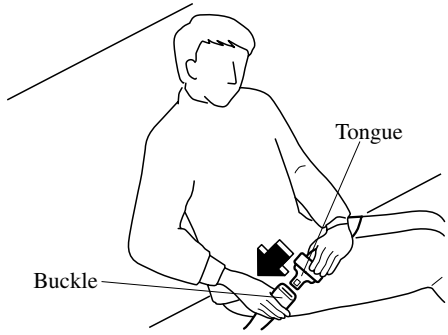

3. Adjust the belt length.
   - To lengthen the belt, hold the tongue at a right angle to the webbing and pull.

Lengthen

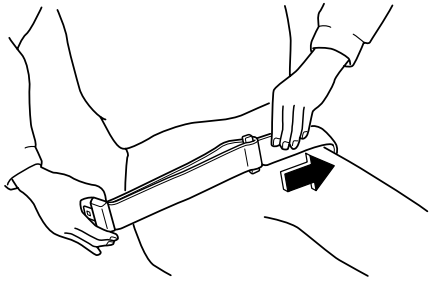

- To shorten, pull the loose end of the webbing.

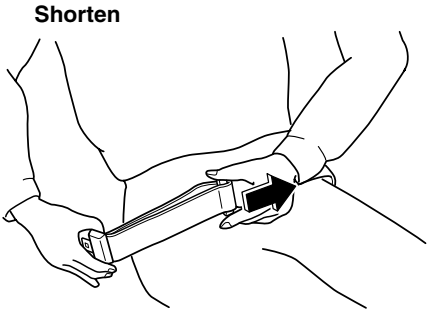

4. Make sure the lap belt is snugly fitted against your body.

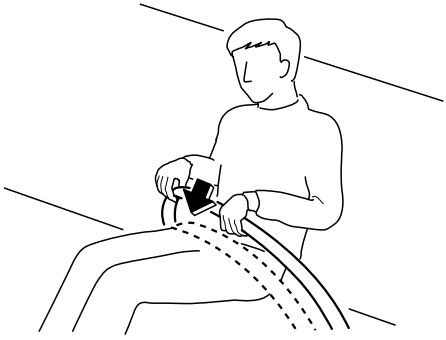

⚠ *WARNING*

Wearing the Lap Belt:
A lap belt worn too high is dangerous. In a collision, this would concentrate the impact force directly on the abdominal area, causing serious injury. Wear the lap belt snugly and as low as possible.

▼ Unfastening the Seat Belt

Depress the button on the buckle.

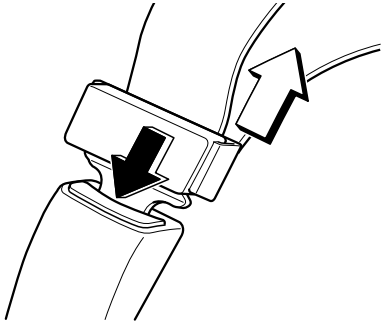

Seat Belt Extender

If your seat belt is not long enough, even when fully extended, a seat belt extender may be available to you at no charge from your Authorized Mazda Dealer.
This extender will be only for you and for the particular vehicle and seat. Even if it plugs into other seat belts, it may not hold in the critical moment of a crash.
When ordering an extender, only order one that provides the necessary additional length to fasten the seat belt properly.
Please contact your Authorized Mazda Dealer for more information.

⚠ *WARNING*

Unnecessary Use of an Extender:
Using a seat belt extender when not necessary is dangerous. The seat belt will be too long and not fit properly. In an accident, the seat belt will not provide adequate protection and you could be seriously injured. Only use the extender when it is required to fasten the seat belt properly.

Using an Improper Extender:
Using a seat belt extender that is for another person or a different vehicle or seat is dangerous. The seat belt will not provide adequate protection and the user could be seriously injured in an accident. Only use the extender provided for you and for the particular vehicle and seat. NEVER use the extender in a different vehicle or seat.

Using an Extender That is Too Long:
Using an extender that is too long is dangerous. The seat belt will not fit properly. In an accident, the seat belt will not provide adequate protection and you could be seriously injured. Don't use the extender or choose one shorter in length if the distance between the extender's buckle and the center of the user's body is less than 15cm (6 in).

Seat Belt Warning Light

If the driver's seat belt is not fastened when the ignition switch is turned to the ON position, the seat belt warning light will remain on until the belt is fastened. If the system does not operate correctly, consult an Authorized Mazda Dealer.

Seat Belt Warning Beep

If the driver's seat belt is not fastened when the ignition switch is turned to the ON position, a beep will sound for about 6 seconds.

Child Restraint Precautions

Mazda strongly urges the use of child-restraint systems for children small enough to use them.

You are required by law to use a child-restraint system for children in the U.S. and Canada. Check your local and state or provincial laws for specific requirements regarding the safety of children riding in your vehicle.

Whatever child-restraint system you consider, please pick the appropriate one for the age and size of the child, obey the law and follow the instructions that come with the individual child-restraint system.

A child who has outgrown child-restraint systems should sit in the rear and use seat belts, both lap and shoulder. If the shoulder belt crosses the neck or face, move the child closer to the center of the vehicle.

Statistics confirm that the rear seats are the best place for all children up to 12 years of age-the more so with a supplemental restraint system (air bags).

A rear-facing child-restraint system should **NEVER** be used in the front seat because it would be too close to the air bag. The front passenger's seat is also the least preferred seat for other child-restraint systems.

⚠ *WARNING*

Proper Size of Child-Restraint System:
For effective protection in vehicle accidents and sudden stops, a child must be properly restrained using a seat belt or child-restraint system depending on age and size. If not, the child could be seriously injured or even killed in an accident.

Follow the Manufacturer's Instructions and Always Keep the Child-Restraint System Buckled Down:
An unsecured child-restraint system is dangerous. In a sudden stop or a collision it could move causing serious injury or death to the child or other occupants. Make sure the child-restraint system is properly secured in place according to the child-restraint system manufacturer's instructions. When not in use, remove it from the vehicle or fasten it with a seat belt, or latch it down to BOTH LATCH lower anchors for LATCH child-restraint systems.

Child Restraint

⚠ *WARNING*

Holding a Child While the Vehicle is Moving:
Holding a child in your arms while the vehicle is moving is extremely dangerous. No matter how strong the person may be, he or she cannot hold onto a child in a sudden stop or collision and it could result in serious injury or death to the child or other occupants. Even in a moderate accident, the child may be exposed to air bag forces that could result in serious injury or death to the child, or the child may be slammed into the adult, injuring the adult. Always secure a child in a proper child-restraint system.

Rear-Facing Child-Restraint System:
Rear-facing child-restraint systems on the front seat are particularly dangerous. The child-restraint system can be hit by a deploying air bag and moved violently backward resulting in serious injury or death to the child. NEVER use a rear-facing child-restraint system in the front seat with an air bag that could deploy.

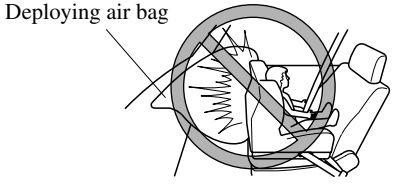

Children and Seating Position with Side Air Bag:
Allowing anyone to lean over or against the front door is dangerous. If the vehicle is equipped with side air bags, the impact of an inflating side air bag could cause serious injury or death to the person. Children are more likely to sleep in the vehicle; when they do, they are more at risk in the front passenger's seat that has a side air bag because they may slump over into the path of the seatback-mounted air bag. Furthermore, leaning over or against the doors could block the side air bag and eliminate the advantages of supplemental protection. With the front air bag and the additional side air bag that comes out of the front seat, the rear seat is always a better location for children who are prone to sleeping. If a child can't be seated in the rear, do not allow the child to lean over or against the front door, even if the child is seated in a child-restraint system.

One Belt, One Passenger:
Using one seat belt for more than one person at a time is dangerous. A seat belt used in this way can't spread the impact forces properly and the two passengers could be crushed together and seriously injured or even killed. Never use one belt for more than one person at a time.

⚠ CAUTION

A seat belt or child-restraint system can become very hot in a closed vehicle during warm weather. To avoid burning yourself or a child, check them before you or your child touches them.

NOTE

Your Mazda is equipped with LATCH lower anchors for attachment of specially designed LATCH child-restraint systems in the rear seats. When using these anchors to secure a child-restraint system, refer to "LATCH Child-Restraint Systems" (page 2-47).

Installing Child-Restraint Systems

Accident statistics reveal that a child is safer in the rear seats. The front passenger's seat is clearly the worst choice for any child under 12, and with rear-facing child-restraint systems it is clearly unsafe due to air bags.

Some child-restraint systems now come with tethers and therefore must be installed on the seats that take tethers to be effective. In your Mazda, tethered child-restraint systems can only be accommodated in the three positions on the rear seats.

Some child-restraint systems also employ specially designed LATCH attachments; refer to "LATCH Child-Restraint Systems" (page 2-47).

⚠ *WARNING*

Tethered Child-Restraint Systems Work Only on Tether-Equipped Rear Seats:
Installation of a tether equipped child-restraint system in the front passenger's seat or the third-row outboard seats defeats the safety design of the system and will result in an increased chance of serious injury if the child-restraint system goes forward without benefit of being tethered.
Place tether equipped child-restraint systems where there are tether anchors.

▼Second-Row Seats Child-Restraint System Installation

Follow these instructions when using a child-restraint system, unless you are attaching a LATCH-equipped child-restraint system to the rear LATCH lower anchors. Refer to "LATCH Child-Restraint Systems" (page 2-47).

NOTE

Follow the child-restraint system manufacturer's instructions carefully. If you are not sure whether you have a LATCH system or tether, check in the child-restraint system manufacturer's instructions and follow them accordingly. Depending on the type of child-restraint system, it may not employ seat belts which are in automatic locking mode.

1. If the seat in which you install a child-restraint system has a seat slide function, slide the seat as far back as possible.
2. Secure the child-restraint system with the lap portion of the lap/shoulder belt. See the instructions on the child-restraint system for belt routing instructions.

3. To get the retractor into the automatic locking mode, pull the shoulder belt portion of the seat belt until the entire length of the belt is out of the retractor.

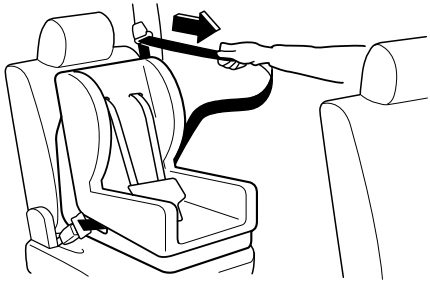

4. Push the child-restraint system firmly into the vehicle seat. Be sure the belt retracts as snugly as possible. Adjust the angle of the seat belt buckle so that the belt is not loose. Clicking from the retractor will be heard during retraction if the system is in the automatic locking mode. If the belt does not lock the seat down tight, repeat this step.

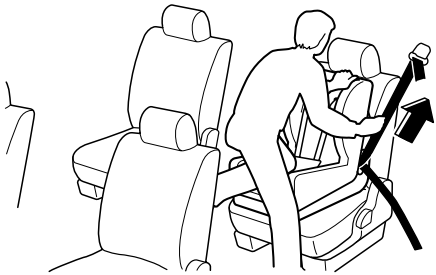

NOTE

Inspect this function before each use of the child-restraint system. You should not be able to pull the shoulder belt out of the retractor while the system is in the automatic locking mode. When you remove the child-restraint system, be sure the belt fully retracts to return the system to emergency locking mode before occupants use the seat belts.

5. If your child-restraint system requires the use of a tether strap, hook and tighten the tether strap by following the manufacturer's instructions.

Anchor bracket location

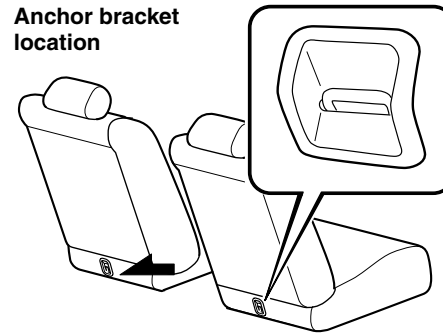

Tether strap position

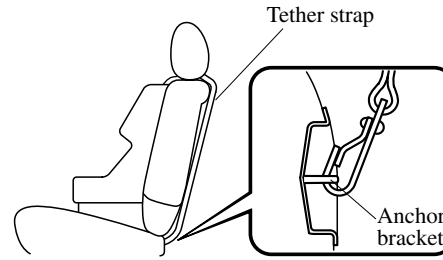

⚠ WARNING

Child-Restraint Tether Usage:
Using the tether to secure anything but a child-restraint system is dangerous. This could weaken or damage the tether or tether anchor and result in injury. Use the tether and tether anchor only for a child-restraint system.

Incorrect Positioning of the Tether Strap:
Positioning the tether strap on top of the head restraint is dangerous. In a collision, the head restraint could bend or break. This will cause the strap to loosen. The child-restraint system could move and injure the child or someone else. Always position the tether strap between the head restraint and the seatback.

▼ Third-Row Center Seat Child-Restraint System Installation

In the third-row seat, tether equipped child-restraint systems belong only in the center seat where there is a tether anchor available.
Follow these instructions when using a child-restraint system.

1. Secure the child-restraint system with a lap belt. Adjust for a snug fit by pulling on the loose end of the belt webbing.
2. If your child-restraint system requires the use of a tether strap, peel back the carpeting in the rear luggage compartment to expose the anchor bracket (above the marking).

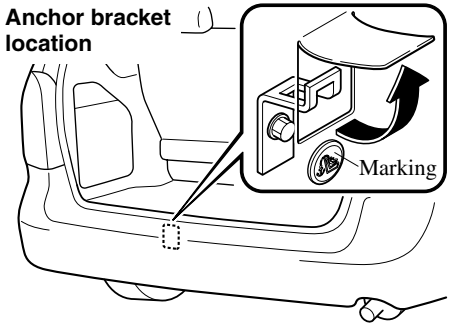

3. Hook the tether strap by following the child-restraint system manufacturer's instructions.

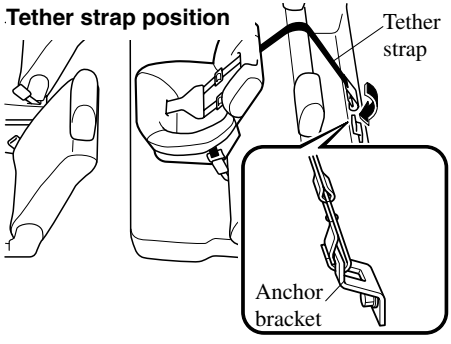

⚠ WARNING

Child-Restraint Tether Usage:
Using the tether to secure anything but a child-restraint system is dangerous. This could weaken or damage the tether or tether anchor and result in injury. Use the tether and tether anchor only for a child-restraint system.

▼Third-Row Outboard Seats Child-Restraint System Installation

Follow these instructions when using a child-restraint system.

NOTE

Follow the child-restraint system manufacturer's instructions carefully. Depending on the type of child-restraint system, it may not employ seat belts which are in automatic locking mode.

1. Secure the child-restraint system with the lap portion of the lap/shoulder belt. See the instructions on the child-restraint system for belt routing instructions.
2. To get the retractor into the automatic locking mode, pull the shoulder belt portion of the seat belt until the entire length of the belt is out of the retractor.

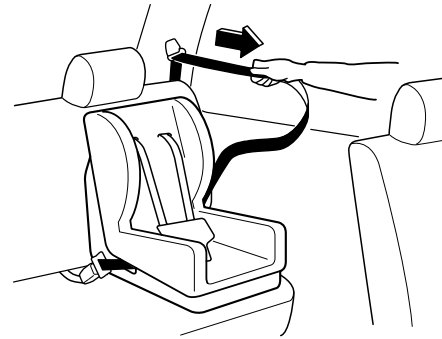

3. Push the child-restraint system firmly into the vehicle seat. Be sure the belt retracts as snugly as possible. Clicking from the retractor will be heard during retraction if the system is in the automatic locking mode. If the belt does not lock the seat down tight, repeat this step.

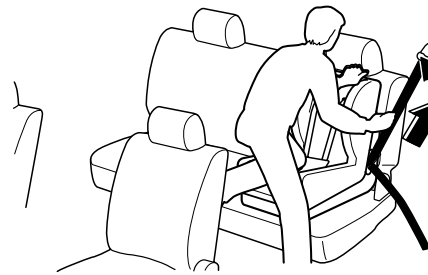

NOTE

Inspect this function before each use of the child-restraint system. You should not be able to pull the shoulder belt out of the retractor while the system is in the automatic locking mode. When you remove the child-restraint system, be sure the belt fully retracts to return the system to emergency locking mode before occupants use the seat belts.

▼If You Must Use the Front Seat for Children

If you cannot put all children in the rear seats, at least put the smallest in the rear and be sure the largest child up front uses the shoulder belt over the shoulder.
Do not put rear-facing child-restraint systems on the front passenger's seat. This seat is also not set up for tethered child-restraint systems, put them in one of the three rear seat positions set up with tether anchors.
Likewise the LATCH child-restraint system cannot be secured in the front passenger's seat and should be used in the second-row seats.
Don't allow anyone to sleep against the right front door if you have an optional side air bag, it could cause serious injuries to an out of position occupant. As children more often sleep in cars, it is better to put them in the rear seat. If installing the child-restraint system on the front seat is unavoidable, follow these instructions when using a front-facing child-restraint system in the front passenger's seat.

NOTE

To check if your Mazda front seats have side air bags:
Every Mazda side air bag will have a "SRS-Air Bag" label on the outboard shoulder of the front seats.

⚠ *WARNING*

Front Passenger's Seat Position:
As your vehicle has front air bags and doubly so because your vehicle has side air bags, a front-facing child-restraint system should be put on the front seat only when it is unavoidable. Always move the seat as far back as possible, because the force of a deploying air bag could cause serious injury or death to the child.

Rear-Facing Child-Restraint System:
Rear-facing child-restraint systems on the front seat are particularly dangerous.
The child-restraint system can be hit by a deploying air bag and moved violently backward resulting in serious injury or death to the child. NEVER use a rear-facing child-restraint system in the front seat with an air bag that could deploy.

⚠ WARNING

Children and Seating Position with Side Air Bag:
Allowing anyone to lean over or against the front door is dangerous. If the vehicle is equipped with side air bags, the impact of an inflating side air bag could cause serious injury or death to the person. Children are more likely to sleep in the vehicle; when they do, they are more at risk in the front passenger's seat that has a side air bag because they may slump over into the path of the seatback-mounted air bag. Furthermore, leaning over or against the doors could block the side air bag and eliminate the advantages of supplemental protection. With the front air bag and the additional side air bag that comes out of the front seat, the rear seat is always a better location for children who are prone to sleeping. If a child can't be seated in the rear, do not allow the child to lean over or against the front door, even if the child is seated in a child-restraint system.

▼Front Passenger's Seat Child-Restraint System Installation

1. Slide the seat as far back as possible.

2. Secure the child-restraint system with the lap portion of the lap/shoulder belt. See the instructions on the child-restraint system for belt routing instructions.
3. To get the retractor into the automatic locking mode, pull the shoulder belt portion of the seat belt until the entire length of the belt is out of the retractor.
4. Push the child-restraint system firmly into the vehicle seat. Be sure the belt retracts as snugly as possible. Clicking from the retractor will be heard during retraction if the system is in automatic locking mode. If the belt does not lock the seat down tight, repeat this step.

NOTE

- Inspect this function before each use of the child-restraint system. You should not be able to pull the shoulder belt out of the retractor while the system is in the automatic locking mode. When you remove the child-restraint system, be sure the belt fully retracts to return the system to emergency locking mode before occupants use the seat belts.
- Follow the child-restraint system manufacturer's instruction carefully. Depending on the type of child-restraint system, it may not employ seat belts which are in automatic locking mode.

LATCH Child-Restraint Systems

Your Mazda is equipped with LATCH lower anchors for attachment of specially designed LATCH child-restraint systems in the second-row seats. Both anchors must be used, otherwise the seat will bounce around and put the child in danger. Some LATCH child-restraint systems must also be used in conjunction with a tether to be effective. If they have a tether you must use it to better assure your child's safety.

⚠ *WARNING*

Manufacturer's Instructions for Child-Restraint System:
An unsecured child-restraint system is dangerous. In a sudden stop or a collision it could move causing serious injury or death to the child or other occupants. Make sure the child-restraint system is properly secured in place according to the child-restraint system manufacturer's instructions.

Unsecured Child-Restraint System:
An unsecured child-restraint system is dangerous. In a sudden stop or a collision it could move causing serious injury or death to the child or other occupants. Follow the child-restraint system manufacturer's instructions on belt routing to secure the seat just as you would with a child in it so that nobody is tempted to put a child in an improperly secured seat later on. When not in use, remove it from the vehicle or fasten it with a seat belt, or latch it down to BOTH LATCH lower anchors for LATCH child-restraint systems.

LATCH Child-Restraint Systems:
Not following the child-restraint system manufacturer's instructions when installing the child-restraint system is dangerous. If seat belts or a foreign object prevent the child-restraint system from being securely attached to the LATCH lower anchors and the child-restraint system is installed improperly, the child-restraint system could move in a sudden stop or collision causing serious injury or death to the child or other occupants. When installing the child-restraint system, make sure there are no seat belts or foreign objects near or around the LATCH lower anchors. Always follow the child-restraint system manufacturer's instructions.

▼LATCH Child-Restraint System Installation Procedure (Second-Row Seats)

1. Slide the second-row seat as far back as possible.
2. Raise the reclining lever and lower the seatback forward.

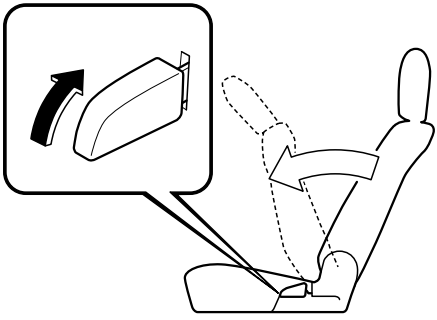

3. Raise the seatback to the most upright position. Make sure the seatback is securely latched by rocking the seatback.

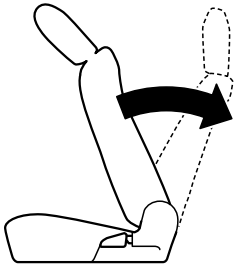

4. Expand the area between the seat bottom and the seatback slightly to verify the locations of the LATCH lower anchors.

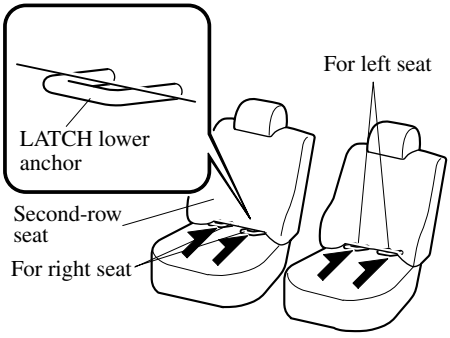

5. Secure the child-restraint system using BOTH LATCH lower anchors, following the child-restraint system manufacturer's instruction.
6. If your child-restraint system came equipped with a tether, that probably means it is very important to properly secure the tether for child safety, please carefully follow the child-restraint system manufacturer's instructions when installing tethers.

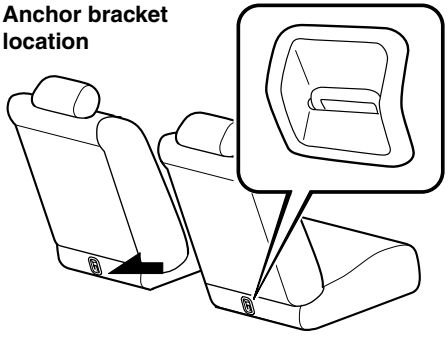

Tether strap position

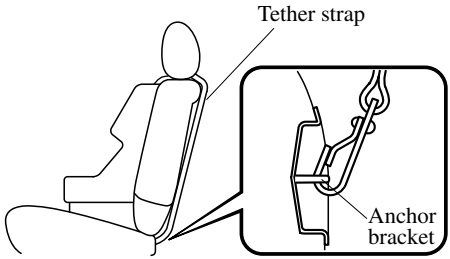

⚠ *WARNING*

Child-Restraint Tether Usage:
Using the tether to secure anything but a child-restraint system is dangerous. This could weaken or damage the tether or tether anchor and result in injury. Use the tether and tether anchor only for a child-restraint system.

Incorrect Positioning of the Tether Strap:
Positioning the tether strap on top of the head restraint is dangerous. In a collision, the head restraint could bend or break. This will cause the strap to loosen. The child-restraint system could move and injure the child or someone else. Always position the tether strap between the head restraint and the seatback.

Supplemental Restraint Systems (SRS) Precautions

Read this owner's manual carefully to verify what air bags (driver-side air bag, passenger-side air bag, side air bags) are equipped in your vehicle.

The front and side supplemental restraint systems (SRS) include 4 air bags (verify "SRS AIR BAG" location indicator marks).
They are located in:

- The steering wheel hub
- The passenger side dashboard
- The outboard sides of the front seatbacks

These systems operate independently depending on the type of accident encountered; if you have side air bags, the side air bags are not likely to deploy on both sides in the same accident because a vehicle is not often hit from both sides. The side air bags work together but they and the frontal air bag system will not normally deploy during the same type of accident unless a combination of frontal and side impacts occur.

The air bag supplemental restraint systems are designed to provide only supplemental protection only in the front seats in a few modes, so seat belts become important in the following ways:

Without seat belt usage, the air bags cannot provide adequate protection during an accident. Seat belt usage is necessary to:

- Keep the passenger away from an inflating air bag.
- Reduce the possibility of injuries during an accident that is not designed for air bag inflation, such as roll-over or rear impact.
- Reduce the possibility of injuries in frontal or side collisions that are not severe enough to activate the air bags.
- Reduce the possibility of being thrown from your vehicle.
- Reduce the possibility of injuries to lower body and legs during an accident because the air bags provide no protection to these parts.
- Hold the driver in a position which allows better control of the vehicle.

Small children, those under 18 kg (40 lb), should be protected by a child-restraint system (page 2-37).

Carefully consider which child-restraint system is necessary for your child and follow the installation directions in this Owner's Manual as well as the child-restraint system manufacturer's instructions.

⚠ *WARNING*

Air Bags without Seat Belts:
Depending only on the air bags for protection during an accident is dangerous. Alone, air bags may not prevent serious injuries. The appropriate air bags can be expected to inflate only in collisions with frontal, near frontal or side forces that are at least moderate. Vehicle occupants should always wear seat belts.

Child in the Front Seat:
Placing a child, 12 years or under, in the front seat is dangerous. The child could be hit by a deploying air bag and be seriously injured or even killed. A sleeping child is more likely to lean against the door and be hit by the side air bag in a moderate, right-side collision. Whenever possible, always secure a child 12 years and under on the rear seats with an appropriate child-restraint system for the child's age and size.

Rear-Facing Child-Restraint System:
Rear-facing child-restraint systems on the front seat are particularly dangerous. The child-restraint system can be hit by a deploying air bag and moved violently backward resulting in serious injury or death to the child. NEVER use a rear-facing child-restraint system in the front seat with an air bag that could deploy.

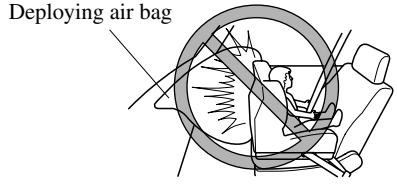

Seating Position with Front Air Bags:
Sitting too close to the air bag storage compartments or placing hands or feet on them is extremely dangerous. Front Air bags inflate with great force and speed. Serious injuries could occur if someone is too close. The driver should always hold onto only the rim of the steering wheel. The front seat passenger should keep both feet on the floor. Front seat occupants should adjust their seats as far back as possible and always sit upright against the seatbacks with seat belts worn properly.

⚠ *WARNING*

Seating Position with Side Air Bags:
Sitting too close to the side air bag storage compartments or placing hands on them is extremely dangerous. A side air bag inflates with great force and speed directly out of the outboard shoulder of the front seat and expands along the front door on the side the car is hit.
Serious injury could occur if someone is sitting too close to the door or leaning against a window in the front seats or if rear seat occupants grab the sides of the front seatbacks. Furthermore, sleeping up against the door or hanging out the driver's-side window while driving could block the side air bag and eliminate the advantages of supplemental protection. Give the side airbags room to work by sitting in the center of the seat while the vehicle is moving with seat belts worn properly.

Front Air Bag Storage Areas:
Attaching an object to a front air bag storage area or placing something in front of it is dangerous. In an accident, the object could interfere with front air bag inflation and injure the occupants.
Always keep the front air bag storage areas free of objects.

Side Air Bag Storage Areas:
Attaching things to the front seat in such a way as to cover the outboard side of the seat in any way is dangerous. In an accident the object could interfere with the side air bag, which inflates from the outboard side of the front seats, impeding the added protection of the side air bag system or redirecting the air bag in a way that is dangerous. Furthermore, the bag could be cut open spewing exhaust.
Do not hang net bags, map pouches or back pads with side straps on the front seats. Never use seat covers on the front seats. Always keep the side air bag storage areas in your front seats free to deploy in the event of a side collision.

Hot Air Bag Inflators:
Hot air bag inflators are dangerous. Immediately after inflation, the inflators in the steering wheel, dashboard or the seatbacks are very hot. You could get burned. Don't touch the internal components of the air bag storage areas after the bags have inflated.

Installation of Front-End Equipment:
Installation of front-end equipment, such as frontal protection bar (kangaroo bar, bull bar, push bar, etc.), snowplow, or winches, is dangerous. The air bag crash sensor system could be affected. This could cause air bags to inflate unexpectedly, or it could prevent the air bags from inflating during an accident. Front occupants could be seriously injured. Never install any front-end equipment to your vehicle.

⚠ *WARNING*

Suspension Adjustment:
Adjusting the vehicle suspension is dangerous. If the vehicle's height or the suspension is changed, the vehicle will be unable to accurately detect a collision resulting in incorrect or unexpected air bag deployment and the possibility of serious injuries.

Modification of the Supplemental Restraint System:
Modifying the components or wiring of the supplemental restraint system is dangerous. You could accidentally activate it or make it inoperable. Don't make any modifications to the supplemental restraint system. This includes installing trim, badges, or anything else over the air bag storage areas. It also includes installing extra electric equipment on or near system components or wiring. An Authorized Mazda Dealer can provide the special care needed in the removal and installation of front seats. It is important to protect the side air bag wiring and connections to assure that the bags do not accidentally deploy and that the seats retain an undamaged air bag connection.

⚠ CAUTION

To prevent damage to the side air bag wiring, don't place luggage or other objects under the front seats.

NOTE

- When an air bag deploys, a loud inflation noise can be heard and some smoke will be released. Neither is likely to cause injury, however, the texture of the air bags may cause light skin injuries on body parts not covered with clothing through friction.
- Should you sell your Mazda, we urge you to tell the new owner of its air bag systems and that familiarization with all instructions about them, from the Owner's Manual, is important.

Air Bag System Description

The supplemental restraint systems (SRS) have two basic subsystems:

- The air bag system with inflators and air bags.
- The electric system with crash sensors and diagnostic module.

The air bags are mounted in the following locations: the center of the steering wheel, the passenger-side of the dashboard, and in the outboard sides of the front seatbacks. They are out of sight until activated.

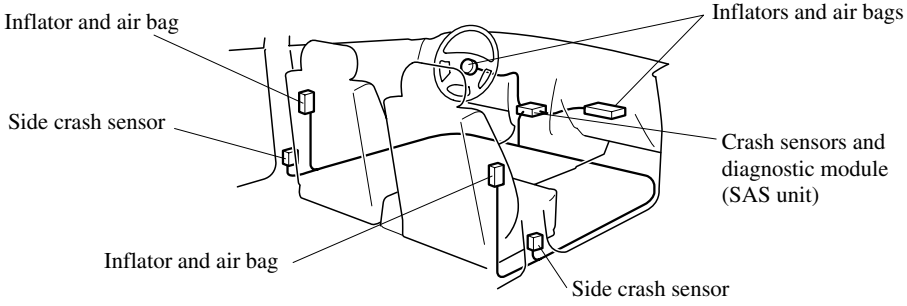

▼How the Air Bags Work

When air bag crash sensors detect a frontal or side impact of greater than moderate force, an electrical current is sent to the inflators.
Gases are produced to inflate the air bags and after the inflation, the air bags quickly deflate.
The air bags will function only once. After that, **the air bags will not work again and must be replaced.**
Only an Authorized Mazda Dealer can replace the systems.

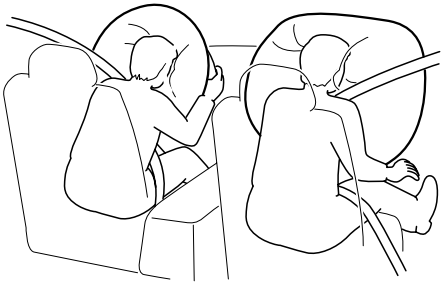

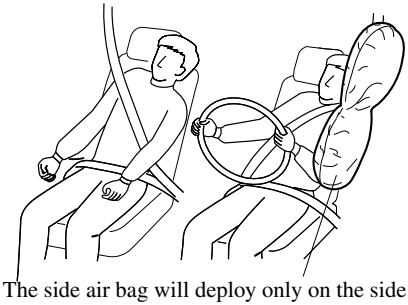

The side air bag will deploy only on the side the vehicle receives the force of the impact.

▼Air Bag Activation/Deactivation

Front air bag activation

A greater than moderate impact will cause the front air bags to inflate in the following cases:

Hitting a solid wall straight on at greater than about 22 km/h (14 mph).

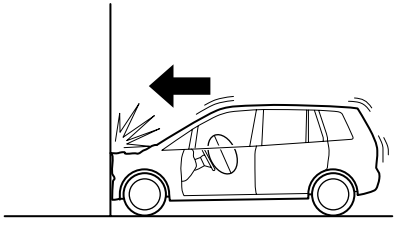

Frontal impact within about a 30 degree range from head-on to the vehicle.

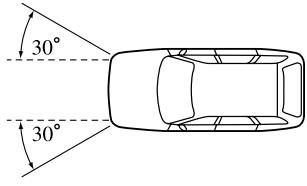

Hitting a curb, pavement edge or hard object.

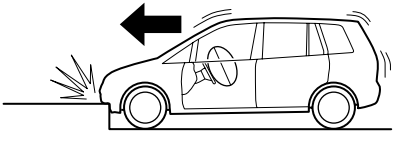

Driving into a big hole or hitting the far side of a hole.

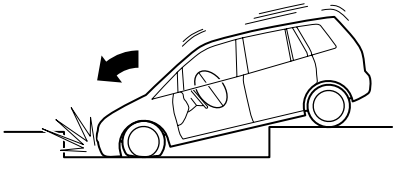

Landing hard or the vehicle falling.

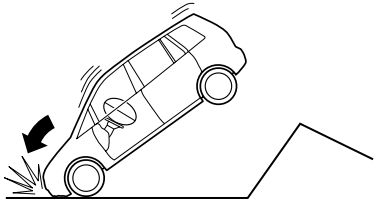

Limitations to front air bag activation

Depending on the severity of impact, the front air bags may not inflate in the following cases:

Impacts involving trees or poles cause severe cosmetic damage but may not have enough impact to activate the air bag.

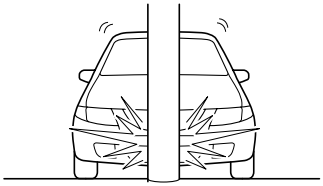

Frontal offset impact to the vehicle may not provide the stopping force necessary for air bag deployment.

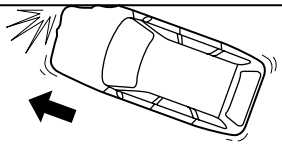

Rear-ending or running under a truck's tail gate may not provide the stopping force necessary for air bag deployment.

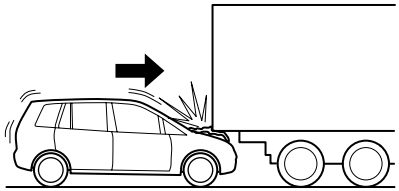

Non-activation of front air bags

Front air bags will not normally inflate in the following cases:

Collision from the rear.

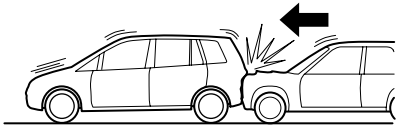

Vehicle roll-over, may deploy the side air bag(s) but not the front air bags.

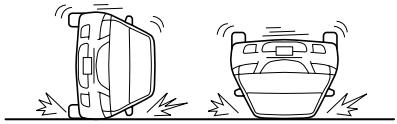

Impact to the side, but it may deploy a side air bag.

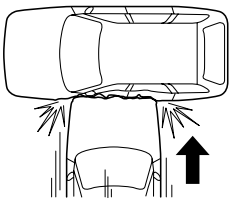

Side air bag activation

Greater than moderate impact to one side of the vehicle (driver or passenger side areas) will cause a side air bag to inflate, but it will not normally deploy the front air bags.

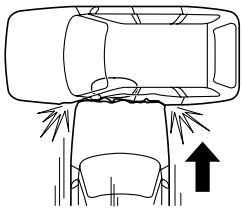

Limitations to side air bag activation

Depending on the severity of impact, a side air bag may not inflate in the following cases:

Frontal offset impact may not provide enough side impact to deploy a side air bag.

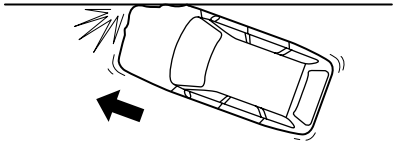

Vehicle roll-over may not provide enough side force to deploy the side air bags.

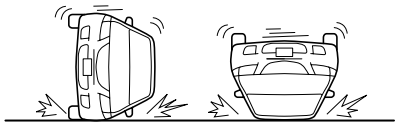

Side impacts involving trees or poles can cause severe cosmetic damage but may not have enough impact force to activate a side air bag.

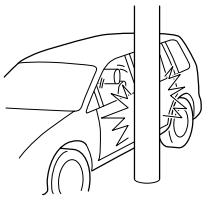

Side impacts with two-wheeled vehicles may not provide enough force to deploy a side air bag.

Non-activation of side air bag

A side air bag will not normally inflate in the following cases:

Collision from the rear.

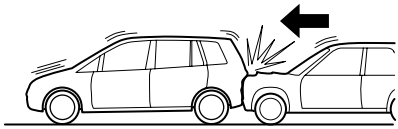

Collision from the front, but it may deploy the front air bags.

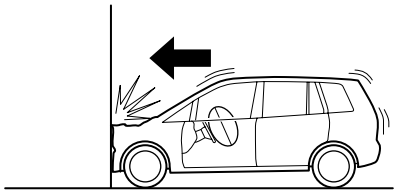

▼Constant Monitoring

The following components of the air bag systems are monitored by a diagnostic system:

- SAS unit
- Air bag modules
- Side air bag crash sensor
- Front seat belt pretensioners
- Related wiring

A diagnostic module continuously monitors the systems' readiness. This begins when the ignition switch is turned to the ON position and continues while the vehicle is being driven.

▼Air Bag/Front Seat Belt Pretensioner Systems Warning Light

If the air bag system is OK, the warning light comes on when the ignition switch is turned to the ON position or after the engine is cranked. After about 6 seconds it goes out.

A system malfunction is indicated when the warning light constantly flashes, stays on or doesn't come on at all. If any of these occur, consult an Authorized Mazda Dealer as soon as possible. The system may not work in an accident.

⚠ *WARNING*

<u>Self-Servicing the Air Bag Systems:</u> Self-servicing or tampering with the systems is dangerous. An air bag could accidentally activate or become disabled. This could cause serious injuries. Never tamper with the systems and always have an Authorized Mazda Dealer perform all servicing and repairs.

▼Maintenance

The air bag systems do not require regular maintenance. But if any of the following occurs, take your vehicle to an Authorized Mazda Dealer as soon as possible:

- The air bag system warning light flashes.
- The air bag system warning light stays on.
- The air bag system warning light stays off when the ignition switch is turned to the ON position.
- The air bags inflate.

⚠ *WARNING*

Damaged Air Bag Sensors:
Driving with damaged air bag sensors is dangerous. A collision, even one not strong enough to inflate the air bags, could damage the sensors. If there was a subsequent collision, a damaged sensor would not inflate the air bags. Always have an Authorized Mazda Dealer inspect the air bag systems after a collision.

Removing Interior Parts:
Removing any components such as the front seat, front dashboard, the steering wheel or parts containing air bag parts or sensors is dangerous. These parts contain essential air bag parts. The air bag could accidentally activate and cause serious injuries. Always have an Authorized Mazda Dealer remove these parts.

Air Bag Disposal:
Improper disposal of an air bag or a vehicle with live air bags in it can be extremely dangerous. Unless all safety procedures are followed, injury can result. Ask an Authorized Mazda Dealer how to safely dispose of an air bag or how to scrap an air bag equipped vehicle.

3 Knowing Your Mazda

Explanation of basic operations and controls; opening/closing and adjustment of various parts.

Doors and Locks 3- 2
Keys 3- 2
Keyless Entry System 3- 3
Door Locks 3- 8
Liftgate 3-18
Power Windows 3-19
Rear Quarter Windows 3-22
Fuel-Filler Lid and Cap 3-22
Hood 3-24
Sunroof 3-25

Security System 3-27
Immobilizer System 3-27
Theft-Deterrent System 3-29

Steering Wheel and Mirrors 3-31
Steering Wheel 3-31
Mirrors 3-31

Keys

⚠ WARNING

Keys and Children:
Leaving children in a vehicle with the ignition key is dangerous. This could result in someone being badly injured or even killed. They could play with power windows or other controls, or even make the vehicle move. Don't leave the keys in your vehicle with children.

⚠ CAUTION

(With immobilizer system)

- To avoid damage to the key, do not:
  - Drop the key.
  - Get the key wet.
  - Expose the key to any kind of magnetic field.
  - Expose the key to high temperatures on places such as the dashboard or hood, under direct sunlight.
- When starting the engine, do not let the following materials touch the key grip. The engine may not start:
  - Spare keys.
  - Keys for other vehicles equipped with an immobilizer system.
  - Metal objects that touch or pass through the hole in the key.
  - Devices for electronic purchases, and security passage.

The keys operate all locks.

Without immobilizer system

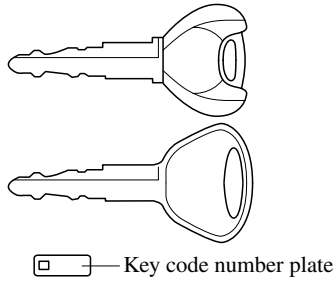

With immobilizer system

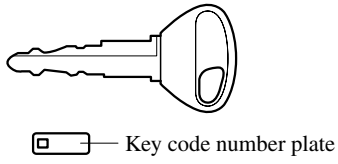

A code number is stamped on the plate attached to the key set; detach this plate and store it in a safe place (not in the vehicle) for use if you need to make a replacement key.

Also write down the code number and keep it in another safe and handy place, but not in the vehicle.

If your key is lost, consult your Authorized Mazda Dealer with the code number ready.

Keyless Entry System

This system locks and unlocks the doors and the liftgate.
It can also help you signal for attention in an emergency.
Opening and closing of the power sliding doors with the keyless entry system transmitter is also possible on power sliding door-equipped vehicles.
Press the button slowly and accurately.

⚠CAUTION

To avoid damage to the transmitter, do not:

- Drop it.
- Get it wet.
- Disassemble it.
- Expose it to heat or sunlight.

NOTE

- The keyless entry system is designed to operate up to about 2.5 m (8 ft) from the center of the vehicle, but this may vary because of local conditions.
- The system doesn't operate when the ignition switch is in the ON position.
- If the transmitter does not operate when pressing a button or the operation range becomes too small, the battery may be dead. To install a new battery, refer to Maintenance (page 3-6).
- Additional transmitters can be obtained at an Authorized Mazda Dealer. Up to 3 transmitters can be used with the keyless entry system per vehicle. Bring all transmitters to an Authorized Mazda Dealer when the electronic codes need to be reset.

▼Transmitter

With power sliding doors

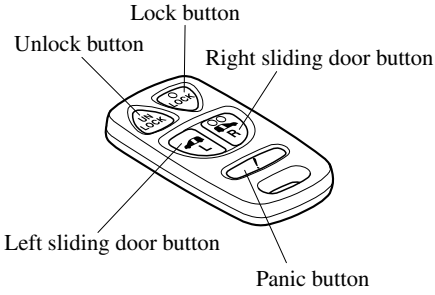

Without power sliding doors

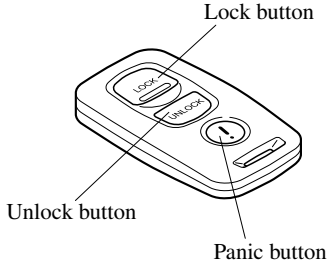

NOTE
This device complies with part 15 of the FCC Rules and with RSS-210 of Industry Canada. Operation is subject to the following two conditions: (1) This device may not cause harmful interference, and (2) this device must accept any interference received, including interference that may cause undesired operation. (Outside transmissions may momentarily interfere with the device's operation.)

Lock button

To lock the doors and the liftgate, press the LOCK button and the hazard warning lights will flash once.

To confirm that all the doors and the liftgate have been locked, press the LOCK button again within 5 seconds. If they are closed and locked, the horn will sound and the hazard warning lights will flash once.

NOTE
Confirm that all the doors and the liftgate are locked visually or aurally by use of the double click.

Unlock button

To unlock the driver's door, press the UNLOCK button and the hazard warning lights will flash twice.

To unlock all the doors and the liftgate, press the UNLOCK button again within 5 seconds and the hazard warning lights will flash twice.

NOTE
After unlocking with the transmitter, all doors and the liftgate will automatically lock if one of the doors or the liftgate is not opened within about 30 seconds.

Sliding door transmitter buttons

If your Mazda has power sliding doors (page 3-12), the transmitter can open/close the sliding doors.

⚠ WARNING

Operating Power Sliding Doors with Transmitter:
Opening or closing the power sliding doors with the keyless entry system transmitter while not watching the doors move is dangerous. People or animals could be injured when the doors open along the rear sides and back to the rear fender, or in closing. Allowing children to use the transmitter could result in serious injuries despite the jam-safe feature. Always be sure that the doorway and rear fender area are clear before activating the power sliding doors and be particularly careful when using the keyless entry system transmitter. Be sure to view the doors opening or closing and do not operate a door on either side if you can't fully see it. Always make sure that you watch the power sliding doors close completely and be sure your children do not have access to the transmitter.

When a power sliding door is completely closed/opened and a power sliding door open/close transmitter button is pressed for 1 second or more, the door opens/closes after the buzzer sounds.

NOTE

- When a power sliding door is not completely closed, pressing the power sliding door open/close transmitter button for 1 second or more will open the door completely.
- Press the button to stop the power sliding doors while they are opening/closing.

!Panic button

You can use the ! button to turn on the alarm, which allows you to signal for attention in an emergency.

NOTE

The alarm will work whether any door or the liftgate is open or closed.

Turning on the alarm

Pressing the ! button once will trigger the alarm for about 2 minutes and 30 seconds, and do the following:

- The horn sounds intermittently.
- The hazard warning lights flash.

Turning off the alarm

Press any button on the transmitter.

NOTE

If the LOCK and UNLOCK button are pressed sequentially, the hazard warning lights may not flash correctly.

▼Transmitter Maintenance

⚠CAUTION

- Make sure the battery is installed with the correct pole facing upward. Battery leakage could occur if it is not installed correctly.
- When replacing the battery, be careful not to bend the electrical terminals or get oil on them. Also be careful not to get dirt in the transmitter as it could damage it.
- Danger of explosion if battery is incorrectly replaced.
- Replace only with the same type battery (CR2025 or the equivalent).
- Dispose of used batteries according to the following instructions.
  - Insulate the plus and minus terminals of the battery using cellophane or equivalent tape.
  - Never disassemble.
  - Never throw the battery into fire and/or water.
  - Never deform or crush.

Replacing the transmitter battery

1. Insert a small screwdriver into the slot and gently pry open the transmitter.

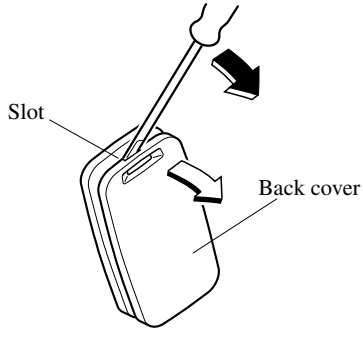

2. Remove the battery.

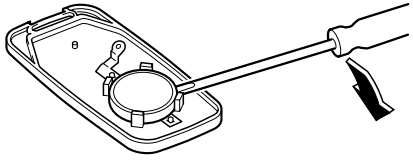

3. Put in the new battery (CR2025 or the equivalent) with the positive pole (+) facing down.

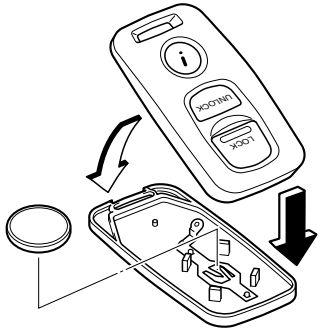

⚠CAUTION

Do not press any buttons when replacing the battery. The electronic code could be altered and cause the keyless entry system to malfunction. If the keyless entry system fails to operate, contact an Authorized Mazda Dealer.

4. Align the front and back covers and snap the transmitter shut.

▼Service

If you have a problem with the keyless entry system, consult an Authorized Mazda Dealer.

If your transmitter is lost or stolen, bring all remaining transmitters to an Authorized Mazda Dealer as soon as possible for a replacement and to make the lost or stolen transmitter inoperative.

⚠CAUTION

- Changes or modifications could void your right to operate the keyless entry system.
- Damage to your keyless entry system will affect the vehicle warranty coverage.

Door Locks

⚠ WARNING

Unattended Children and Pets:
Leaving a child or an animal unattended in a parked vehicle is dangerous. In hot weather, temperatures inside a vehicle can become high enough to cause brain damage or even death. Always take all children and animals with you or leave a responsible person with them.

Keys and Children:
Leaving children in a vehicle with the ignition key is dangerous. This could result in someone being badly injured or even killed. They could play with power windows or other controls, or even make the vehicle move. Don't leave the keys in your vehicle with children.

Unlocked Doors:
Unlocked doors in a moving vehicle are dangerous. Passengers can fall out if a door is accidentally opened and can more easily be thrown out in an accident. So keep all doors locked when driving.

NOTE

Always remove the key from the ignition switch, close all windows, and lock all doors when leaving your vehicle unattended. This discourages intruders and thieves.

▼Locking, Unlocking with Key

Either front door can be locked/unlocked with the key.
Turn the key toward the front to unlock, toward the back to lock.

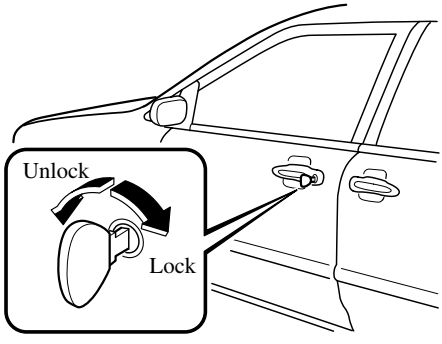

▼Locking, Unlocking with Transmitter

The doors can be locked/unlocked by operating the keyless entry system transmitter, refer to keyless entry system (page 3-3).

▼Locking, Unlocking with Door-Lock Button

Front doors

To lock either front door from the inside, push its door-lock button.
To unlock, pull it out.

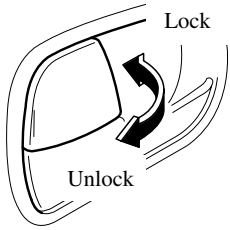

To lock either front door with the door-lock button from the outside, push its door-lock button and close the door.

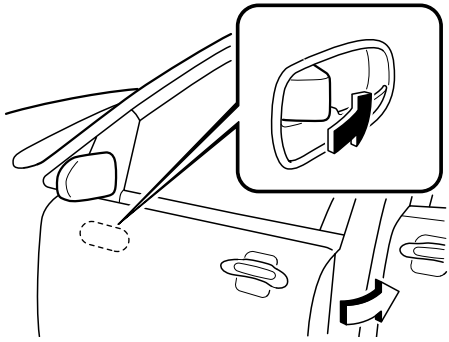

NOTE
When locking the doors this way, be careful not to leave the key inside the vehicle.

Sliding doors

To lock a sliding door from the inside, push down its door-lock button.
To unlock, pull it up.

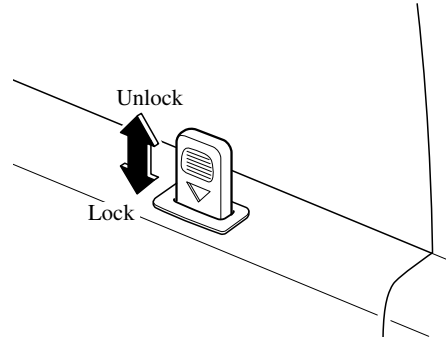

To lock a sliding door with the door-lock button from the outside, push down its door-lock button and close the door.

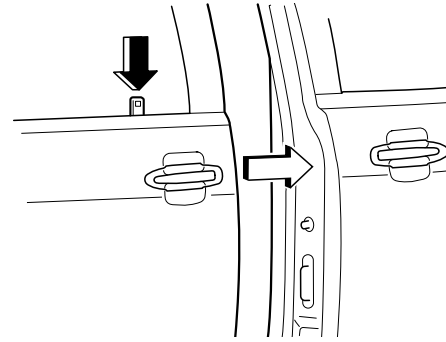

NOTE
The left-side sliding door cannot be opened when the fuel-filler lid is open. Close the fuel-filler lid to open the sliding door.

▼Power Door Locks

Locking, unlocking with key

All doors and the liftgate lock automatically when any front door is locked with the key. All doors and the liftgate unlock when the driver's door is unlocked and the key is held in the unlock position a second longer. Also, all doors and the liftgate unlock when the passenger's door is unlocked.

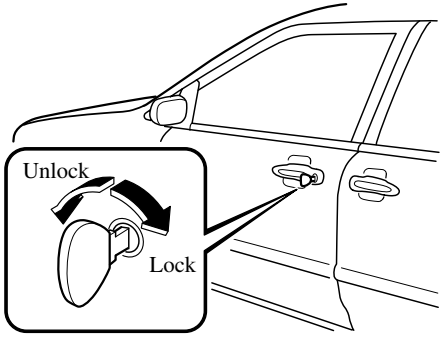

NOTE
Holding the key in the unlocked position in the driver's door lock for about a second unlocks all doors and the liftgate. To unlock only the driver's door, insert the key into the driver's door lock and turn the key briefly to the unlock position and then immediately return it to the center position.

Locking, unlocking with door-lock switch

All doors and the liftgate lock automatically when DOOR LOCK is pushed. They all unlock when the unmarked part of the door-lock switch is pushed.

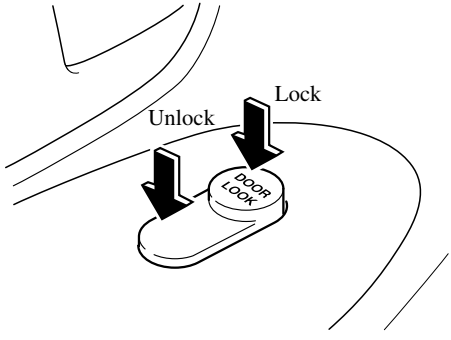

▼Sliding Door Open/Close (Manual Operation)

To open, pull the inner door handle or the outer door handle.

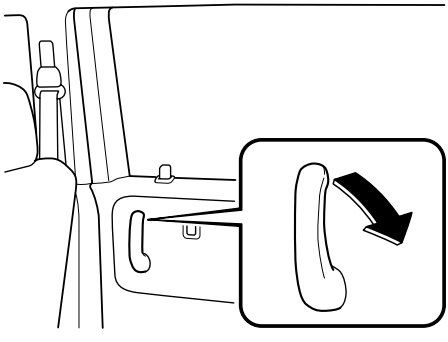

NOTE
The left-side sliding door cannot be opened when the fuel-filler lid is open. Close the fuel-filler lid to open the sliding door.

To close, pull the inner door handle or outer door handle.

NOTE

(Without power sliding doors)
When closing a door from the outside, hold the door handle pulled while sliding the door.

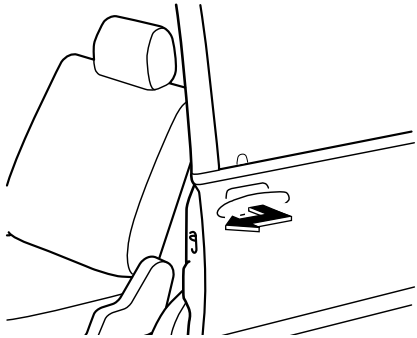

▼Rear Door Child Safety Locks

These locks are intended to help prevent children from accidentally opening the sliding doors. Use them both whenever a child rides in the vehicle.

If you slide the child safety lock to the lock position before closing that door, the door cannot be opened from the inside. The door can be opened only by lifting the outside handle.

If your Mazda has power sliding doors, press the power sliding doors main switch to the OFF position.
Refer to Power Sliding Doors (page 3-12)

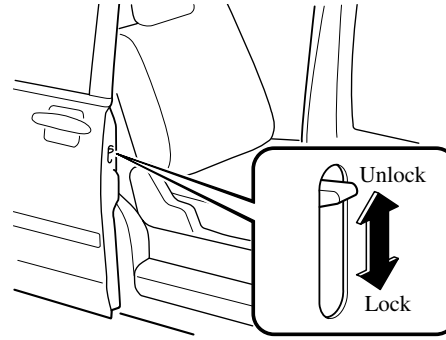

⚠ *WARNING*

Child Safety Lock and Power Sliding Doors Main Switch (With Power Sliding Doors):
Leaving the power sliding doors main switch in the ON position with the child safety locks in the lock position, while the vehicle is stopped or parked is dangerous. If a child mistakenly presses the rear power sliding door switches, a door will open automatically even if the child safety locks are in the lock position. If a door opens unexpectedly, children or other occupants could fall out resulting in serious injury or death. Whenever there are children in the vehicle, turn off the power sliding doors with the power sliding doors main switch to lock the rear power sliding door switches even if the child safety locks are in the lock position.

▼Easy Closure (With Power Sliding Doors)

The Easy Closure system automatically closes the doors completely from the near-shut position.
This system also operates when the doors are closed manually.

⚠ *WARNING*

Hands and Fingers Pinched in Closing Sliding Doors:
Placing hands or fingers around a sliding door is dangerous because the door closes automatically from the near-shut position, hands and fingers could get pinched and injured. When closing a sliding door, always keep hands and fingers away from the door.

⚠ CAUTION

When closing a door, do not use excessive force as it may damage the system.

▼Power Sliding Doors

The power sliding doors open/close electrically by operating switches in the vehicle or on the keyless entry system transmitter.
To operate the power sliding doors with the keyless entry system transmitter, refer to Keyless Entry System (page 3-3).

Electric power to the power sliding doors can be switched on and off with the power sliding doors main switch.

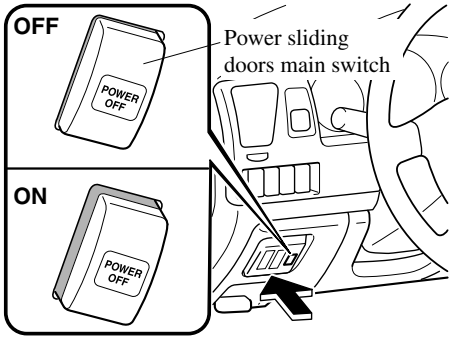

ON: Switches on electric power to power sliding doors.
OFF: Switches off electric power to power sliding doors.

⚠ WARNING

Operating Power Sliding Doors:
Opening or closing the power sliding doors while not watching the doors move is dangerous. People or animals could be injured when the doors open along the rear sides and back to the rear fender, or in closing. Because of unseen obstacles and the jam-safe feature a door may not close completely and, if left unnoticed, could result in serious injury or death if an occupant were to fall out of the vehicle.
Always be sure that the doorway and rear fender area is clear before activating the power sliding doors. Be sure to view the power sliding doors opening or closing and make sure that you watch them close completely.

Moving the Vehicle while Closing Power Sliding Doors:
Shifting out of Park (P) while the doors are moving is dangerous. The doors will not close completely and this could result in serious injury or death if an occupant were to fall out of the vehicle. Occupants in the vehicle will also not have full protection in a collision. Always be sure the doors completely close before you shift into gear and move the vehicle.

⚠ WARNING

Children and the Power Sliding Door Switches:
Allowing children to operate the power sliding door switches and the keyless entry system is dangerous. Children are not aware of the dangers of people getting fingers and hands caught in moving doors. Never allow children to operate the power sliding door system.

Child Safety Lock and Power Sliding Doors Main Switch:
Leaving the power sliding doors main switch in the ON position with the child safety locks in the lock position, while the vehicle is stopped or parked is dangerous. If a child mistakenly presses the rear power sliding door switches, a door will open automatically even if the child safety locks are in the lock position. If a door opens unexpectedly, children or other occupants could fall out resulting in serious injury or death. Whenever there are children in the vehicle, turn off the power sliding doors with the power sliding doors main switch to lock the rear power sliding door switches even if the child safety locks are in the lock position.

⚠ WARNING

Open Windows and Power Sliding Doors:
It is dangerous to stick your head or hands out the power sliding door windows while the doors are opening/closing. A head or hands could be caught resulting in serious injury. Never stick your head or hands out the power sliding door windows.

Entering or Exiting the Vehicle Parked on a Steep Downward Slope:
Entering or exiting a vehicle parked on a steep downward slope before the door has completely opened is dangerous. The door could unexpectedly move down resulting in serious injury. Make sure that the door has completely opened before exiting or entering the vehicle on a steep downward slope.

NOTE

- Do not apply unnecessary force to the doors when they are opening/closing electrically. Unnecessary force on the doors may cause them to reverse direction of movement automatically.
- When the vehicle is parked on a slope, electrical opening/closing of the doors may not operate. When the doors cannot be opened/closed electrically, press the power sliding doors main switch to the OFF position and open/close the doors manually.
- If there is a malfunction in the power sliding door system, the buzzer sounds continuously. If this happens, press the power sliding doors main switch to the OFF position and the buzzer will stop. Consult your nearest Authorized Mazda Dealer to have the power sliding doors checked.
- The power sliding doors will not operate unless they are unlocked, and the power sliding doors main switch is in the ON position.
- The fuel-filler lid does not open when the left power sliding door is opening.
- The left power sliding door cannot fully open when the fuel-filler lid is open. To fully open the left power sliding door in this situation, carry out the following procedure:
  1. Close the left power sliding door.
  2. Close the fuel-filler lid.
  3. Open the left power sliding door.

Opening/Closing with Switches

1. Bring the vehicle to a complete stop.
2. Put the shift lever in park (P).
3. Set the parking brake.
4. Unlock the sliding doors.
5. Press the power sliding doors main switch to the ON position.

If you attempt to operate the vehicle in any way other than the above conditions (except step 4) while the power sliding doors are opening/closing electrically, the buzzer will sound. Moreover, a door that is sliding open will stop.
When the above conditions are satisfied, you can resume power sliding door open/close operation with the switches.

Operation from the driver's seat

Operate the left/right power sliding door switch to open/close the left/right door.

When either power sliding door switch is pressed for 1 second or more, the door controlled by that switch will open/close automatically after the buzzer sounds.

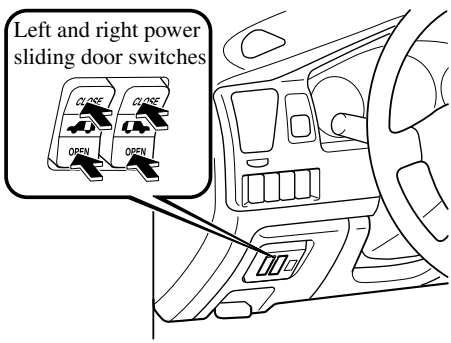

NOTE

- If a power sliding door switch is pressed again while the buzzer is sounding, the operation can be canceled.
- Press a power sliding door switch to stop the power sliding doors while they are opening/closing.

Operation from the rear seats

When the power sliding doors are completely closed/open and either rear power sliding door switch is pressed for 1 second or more, the door where the switch was pressed opens/closes automatically after the buzzer sounds.

NOTE

When a power sliding door is not completely closed and a rear power sliding door switch is pressed for 1 second or more, the door completely opens automatically.

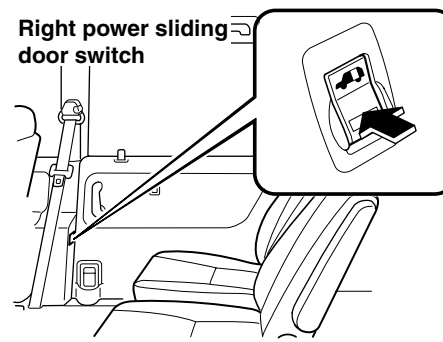

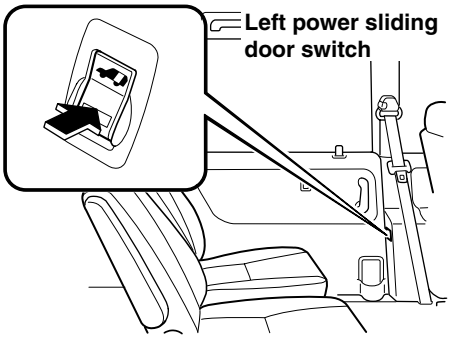

NOTE

- If a rear power sliding door switch is pressed again while the buzzer is sounding, the operation can be canceled.
- Press a rear power sliding door switch to stop the power sliding doors while they are opening/closing.

Opening/closing with door handles

When the power sliding doors are completely closed and a door is slid by the handle slightly in the direction of opening, the door completely opens automatically after the buzzer sounds.

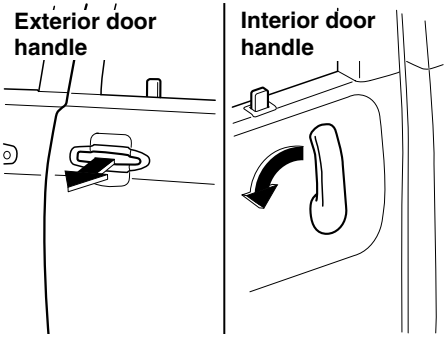

When the doors are completely open and a door is slid by the handle 5 cm (2 in) in the direction of closing, the doors will completely close automatically after the buzzer sounds.

Jam-safe equipment

While a door is opening/closing electrically and the system detects a person or an object in the sliding door's path, the door will slide in the reverse direction automatically.

⚠ *WARNING*

Check Area Around Power Sliding Doors Before Operating:
Not checking for occupants and objects around a power sliding door before opening/closing it is dangerous. The jam-safe equipment is designed to prevent jamming in the event an obstruction is in the sliding door's path. However, if the jam-safe function detects an obstruction and slides the door in the reverse direction, an occupant in the door's path could be seriously injured. Always check the area around the power sliding doors before opening/closing them.

When the power sliding doors are sliding in the opening direction and an obstruction is detected in its path, the buzzer sounds and the doors slide in the opposite direction approximately 10 cm (4 in) and stop. When the doors are sliding in the closing direction and an obstruction is detected, the buzzer sounds and the doors open completely.

NOTE

If the power sliding door system repeatedly detects an obstruction in the open/close directions for a number of times, the door will be stopped.

Power sliding doors main switch

When the power sliding doors main switch is pressed to the OFF position, electrical open/close operation is not possible. The power sliding doors can be opened/closed manually.

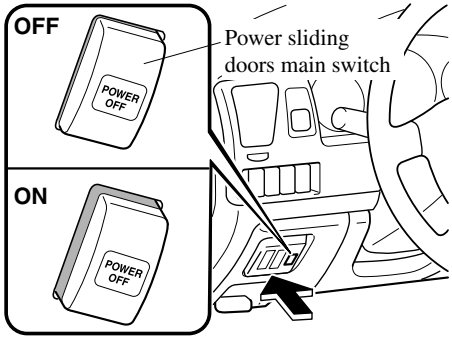

⚠ *WARNING*

Child Safety Lock and Power Sliding Doors Main Switch:
Leaving the power sliding doors main switch in the ON position with the child safety locks in the lock position, while the vehicle is stopped or parked is dangerous. If a child mistakenly presses the rear power sliding door switches, a door will open automatically even if the child safety locks are in the lock position. If a door opens unexpectedly, passengers or other children could fall out resulting in serious injury or death. Whenever there are children in the vehicle, turn off the power sliding doors with the power sliding doors main switch to lock the rear power sliding door switches when the child safety locks are in the lock position.

Turn Power Sliding Doors Main Switch OFF When Working on Vehicle:
Leaving the power sliding doors main switch in the ON position while working on the vehicle is dangerous. If the open/close switches are mistakenly pressed, the power sliding doors will slide and hands or head could become caught resulting in possible injury. Always press the power sliding doors main switch to the OFF position when working on the vehicle.

NOTE

- If there is a problem with the power sliding doors and you want to operate them manually, press the power sliding doors main switch to the OFF position and they can be operated manually.
- If the power sliding doors main switch is pressed to the OFF position while the doors are opening/closing electrically, the buzzer sounds and the sliding door(s) stop.
  If you press the power sliding doors main switch to the ON position again, the door(s) can be opened/closed electrically.
- When a sliding door is half open and the system is switched to manual operation, the door can be operated manually by first sliding it forward and back, and then in the desired direction.

Liftgate

⚠ *WARNING*

Open Liftgate:
An open liftgate in a moving vehicle will cause exhaust gas to be drawn into the cabin. This gas contains CO (carbon monoxide), which is colorless, odorless, and highly poisonous, and it can cause loss of consciousness and death. Moreover, an open liftgate could cause occupants to fall out in accident. Do not drive with the liftgate open.

▼Locking, Unlocking with Key

To lock the liftgate with the key, insert the key and turn it counterclockwise.
To unlock the liftgate with the key, insert the key and turn it clockwise.

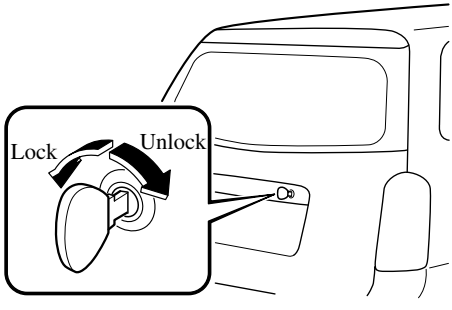

The liftgate can be locked/unlocked by inserting the key into the key slot of any door, refer to Power Door Locks (page 3-10).

▼Locking, Unlocking with Transmitter

The liftgate can be locked/unlocked by operating the keyless entry system transmitter, refer to Keyless Entry System (page 3-3).

▼Locking, Unlocking with Door-Lock Switch

The liftgate can be locked/unlocked by operating the door-lock switch, refer to Power Door Locks (page 3-10).

▼Opening and Closing the Liftgate

Opening the liftgate

Pull up on the handle.

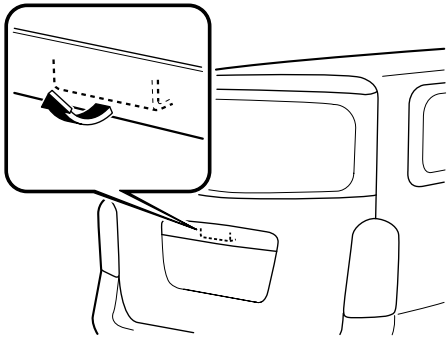

Closing the liftgate

Use both hands to push the liftgate down until the lock snaps shut. Do not slam it. Pull up on the liftgate to make sure it is secure.

Power Windows

The ignition switch must be in the ON position for the power windows to operate.

⚠ *WARNING*

Closing Power Windows:
Closing power windows are dangerous. A person's hands, head, or even neck could be caught by the window and result in serious injury or even death.
This warning applies especially to children. Make sure the opening is clear before closing a window.

Children and Power Windows:
Leaving the power window switches unlocked while children are in the vehicle is dangerous. Power window switches that are not locked with the power window lock switch would allow children to operate power windows unintentionally which could result in serious injury if a child's hands, head or neck becomes caught by the window. Always lock all passenger power windows with the power window lock switch on the driver's side while children are in the vehicle, and never allow children to play with power window switches.

⚠ CAUTION

To prevent burning out the fuse and damaging the power window system, don't open or close more than two windows at once.

▼Operating the Driver's Side Power Window

To open the window, push down the switch.
To close the window, pull up the switch.

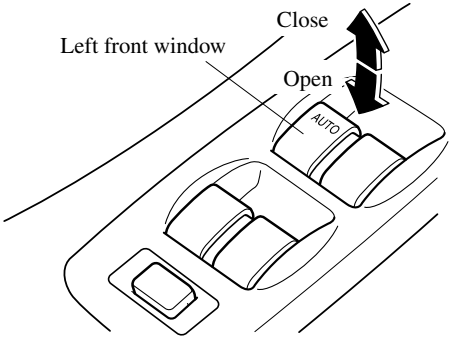

Auto-opening

To fully open the window automatically, push the switch completely down.

To stop the window partway, pull up the switch and then release it.

▼Operating the Passenger Power Windows

The power windows may be operated when the power window lock switch on the driver's door is in the unlocked position.

The passenger windows may be opened or closed by the power window master control switches on the driver's door.

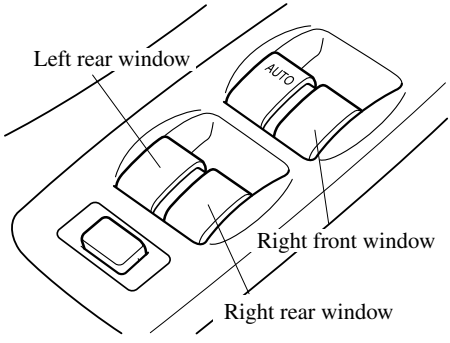

Front passenger-side power window

To open the window, push down the switch.
To close the window, pull up the switch.

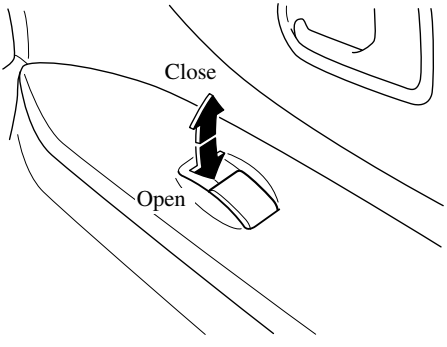

Rear power windows

To open a window, push the lower part of the switch.
To close, push the upper part of the switch.

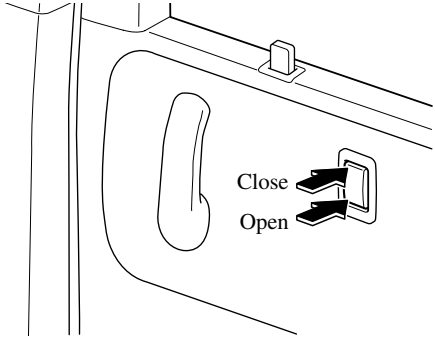

▼Power Window Lock Switch

With the lock switch in the unlocked position, all power windows on each door can be operated.

With the lock switch in the locked position, only the driver's side power window can be operated.

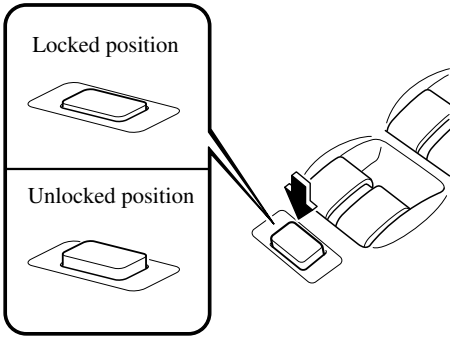

⚠ *WARNING*

Unintentional Window Operation:
Unintentional window operation is dangerous. A person's hands, head, or neck could be caught by the window and result in serious injury. Unless a passenger needs to operate a window, keep the power window lock switch in the locked position.

Rear Quarter Windows

Open or close a swing-out rear quarter window by releasing the latch and moving the window.

▼Opening a Window

Pull the latch inward and then push the window outward.

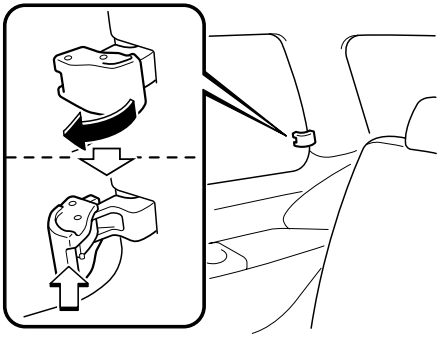

▼Closing a Window

Pull the latch inward and then push it backward until it snaps shut. Make sure the window is securely closed.

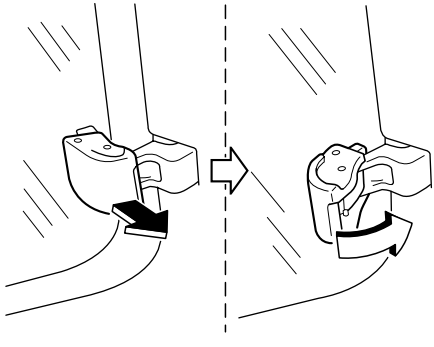

Fuel-Filler Lid and Cap

⚠ *WARNING*

Fuel Spray:
Fuel spray is dangerous. Fuel can burn skin and eyes and cause illness when ingested. Fuel spray is released when there is pressure in the fuel tank and the fuel cap is removed too quickly. When removing the fuel cap, loosen the cap slightly and wait for any hissing to stop. Then remove it.

Fuel Vapor:
Fuel vapor is dangerous. It could be ignited by sparks or flames causing serious burns and injuries. Before refueling, stop the engine, and always keep sparks and flames away from the filler neck.

⚠ CAUTION

Always use only a genuine Mazda fuel cap or an approved equivalent, available at Authorized Mazda Dealers. The wrong cap can result in a serious malfunction of the fuel and emission control systems. It may also cause the check engine light in the instrument cluster to illuminate.

▼Fuel-Filler Lid

To open, pull up the remote fuel-filler lid release.

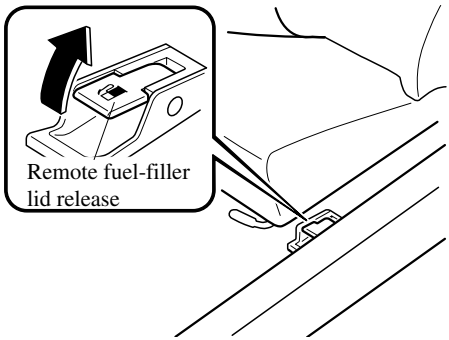

NOTE

The fuel-filler lid cannot be opened when the left-side sliding door is open. Close the sliding door to open the fuel-filler lid.

▼Fuel-Filler Cap

To remove the filler cap, turn it counterclockwise.

To replace the filler cap, turn it clockwise until it clicks.

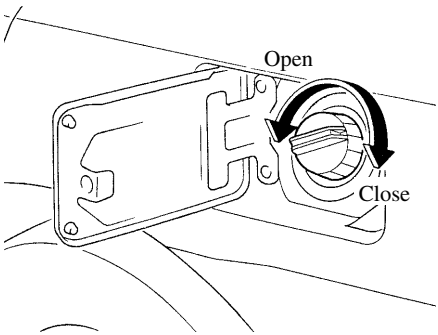

⚠CAUTION

Make sure the fuel-filler cap is tightened securely. The check engine light comes on when the cap isn't tightened securely. If the light remains on (even after you have tightened the cap securely, driven, and restarted the engine several times), it may indicate a different problem. Contact an Authorized Mazda Dealer as soon as possible.

Hood

▼Opening the Hood

1. With the vehicle parked, pull the release handle to unlock the hood.

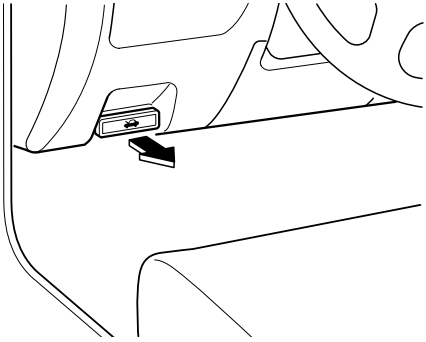

2. Pull the safety catch up and lift the hood.

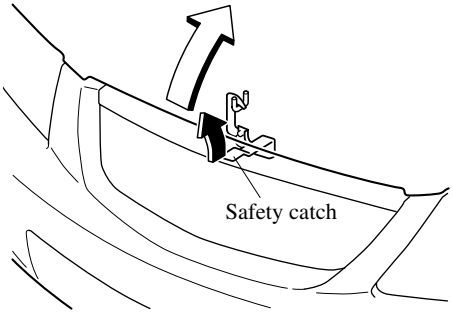

3. Use the support rod to hold the hood open.

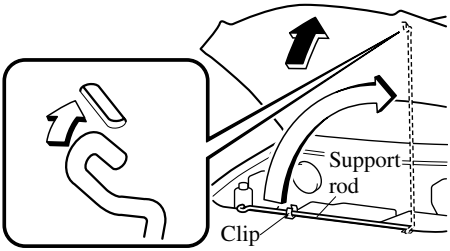

▼Closing the Hood

1. Check under the hood area to make certain all filler caps are in place and all loose items (e.g. tools, oil containers, etc.) have been removed.
2. Secure the rod in its clip.
3. Close the hood so that it locks securely.

Sunroof

The sunroof can be opened or closed electrically only when the ignition switch is in the ON position.

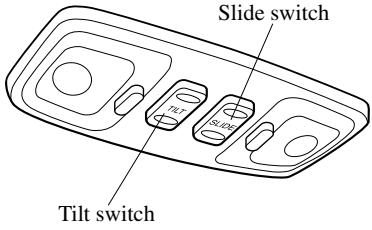

⚠ WARNING

Extending the Head or Arms Through the Sunroof:
Extending the head, arms, or other parts of the body through the sunroof is dangerous. The head or arms could hit something while the vehicle is moving. This could cause death or serious injury. Don't let passengers stand up or extend anything through the open sunroof while the vehicle is moving.

Closing the Sunroof:
A closing sunroof is dangerous. The hands, head, or even neck of a person —especially a child—could be caught in it as it closes, causing serious injury or even death. Make sure the opening is clear before closing the sunroof.

NOTE

After washing your Mazda or after a rain, wipe the water off the sunroof before operating it.

▼ Tilt Operation

The rear of the sunroof can be tilted open to provide more ventilation.

To tilt, push the rear of the tilt switch.

To close, push the front of the tilt switch.

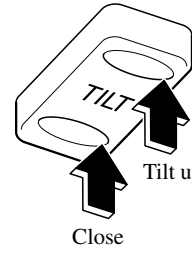

▼Slide Operation

To open to any position, press the rear of the slide switch.

To close, press the front of the slide switch.

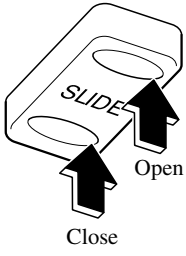

NOTE
For safety reasons, the sunroof stops moving approximately 20 cm (8 in) prior to completely closing. After you are sure it is unobstructed, resume closing the sunroof by pressing the switch again.

▼Sunshade

The sunshade can be opened and closed by hand.

The sunshade opens automatically when the sunroof is opened, but must be closed by hand.

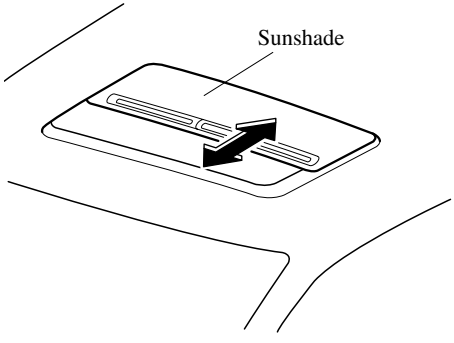

⚠CAUTION
The sunshade doesn't tilt. To avoid damaging the sunshade, don't push up on it.

Immobilizer System

The optional immobilizer system allows the engine to start only with a key the system recognizes.

If someone attempts to start the engine with an unrecognized key, the engine will not start, thereby helping to prevent the theft of your vehicle.

⚠CAUTION

Changes or modifications not expressly approved by Mazda could void the user's authority to operate the equipment.

NOTE

This device complies with part 15 of the FCC Rules and with RSS-210 of Industry Canada. Operation is subject to the following two conditions: (1) This device may not cause harmful interference, and (2) this device must accept any interference received, including interference that may cause undesired operation. (Outside transmissions may momentarily interfere with the device's operation.)

▼Immobilizer System Warning Light

If the immobilizer system is working properly, the light will come on when the ignition switch is turned to the ON or START position. The light will go out when confirmation by the immobilizer system is completed.

If the light flashes rapidly, fails to come on, or comes on and stays on, it indicates a system malfunction. If any of these occur, contact an Authorized Mazda Dealer as soon as possible.

NOTE

- If the warning light comes on and stays on when the ignition switch is turned to the ON position, the engine will not start.
- Signals from a TV or radio station, or from a transceiver or a mobile telephone, could interfere with your immobilizer system. If you are using the proper key and your engine fails to start, check the warning light. If it is flashing, remove the ignition key and wait 2 seconds or more, then reinsert it and try starting the engine again. If it doesn't start after 3 or more tries, contact an Authorized Mazda Dealer.
- If the warning light flashes continuously while you are driving, don't shut off the engine. Go to an Authorized Mazda Dealer and have it checked. If you shut off the engine while the light is flashing you won't be able to restart it.

▼Maintenance

If you have a problem with the immobilizer system or the key, consult an Authorized Mazda Dealer.

⚠CAUTION

- To avoid damage to the key, do not:
  - Drop the key.
  - Get the key wet.
  - Expose the key to any kind of magnetic field.
  - Expose the key to high temperatures on places such as the dashboard or hood, under direct sunlight.
- When starting the engine, do not let the following materials touch the key grip. The engine may not start:
  - Spare keys.
  - Keys for other vehicles equipped with an immobilizer system.
  - Metal objects that touch or pass through the hole in the key.
  - Devices for electronic purchases, and security passage.

NOTE

- The keys carry a unique electronic code. For this reason, and to assure your safety, replacement keys require some waiting time to obtain. They are only available through an Authorized Mazda Dealer.
- Always keep a replacement key, in case one is lost. If a key is lost, contact an Authorized Mazda Dealer as soon as possible.
- If you lose a key, an Authorized Mazda Dealer will reset the electronic codes of your remaining keys and immobilizer system. Starting the vehicle with a key that has not been reset is not possible.

▼Modification and Add-On Equipment

Mazda cannot guarantee the system's operation if the system has been modified or if any add-on equipment has been installed to it.

⚠CAUTION

To avoid damage to your vehicle, do not modify the system or install any add-on equipment to it.

Theft-Deterrent System

The optional theft-deterrent system is designed to prevent your vehicle or its contents from being stolen when all the doors, hood, and liftgate are locked.

If forcible entry is attempted, the system sounds the horn and flashes the hazard warning lights.

NOTE
The theft-deterrent system operates without the keyless entry system transmitter, as well.

The system won't function unless it's properly armed. So when you leave the vehicle, lock all the doors and the liftgate, close all the windows, take your key, your transmitter, and make sure the security indicator light is flashing.

▼Operation

What turns it on:

- Forcing open a door, the hood or the liftgate.
- Opening a door or the hood by operating an inside door-lock button or the hood release handle.

What it does:

- The horn sounds intermittently and the hazard warning lights flash.
- The alarm continues for about 3 minutes, then stops.

If the system is triggered again, the lights and horn will activate until a door or the liftgate is unlocked with the key or with the transmitter.

▼How to Arm the System

1. Remove the key from the ignition switch.
2. Close the hood. Then close all doors and the liftgate and lock them from the outside using the key in the door. If you have the keyless entry system, press the LOCK button on the transmitter. The hazard warning lights will flash once to indicate that the system is armed.

   The following method will also arm the theft-deterrent system:
   Close the hood. Press the area on the door-lock switch marked "DOOR LOCK" once. Close all doors and the liftgate.

NOTE
Locking the doors with the inside door-lock button will not arm the system.

3. The indicator light flashes once every 3 seconds to indicate that the system is fully armed. It continues to flash until the theft-deterrent system is turned off.

▼ To Turn off an Armed System

An armed system can be turned off by any one of the following methods:

- Unlock a door or the liftgate with the key.
- Press the UNLOCK button on the keyless entry system transmitter.
- Insert the key into the ignition switch and turn it to the ON position.

The hazard warning lights will flash twice to indicate that the system is turned off.

▼ To Stop an Alarm

A triggered alarm can be turned off by any one of the following methods:

- Unlock a door or the liftgate with the key.
- Press the UNLOCK button on the keyless entry system transmitter.

NOTE
If you have any problem with the theft-deterrent system, consult an Authorized Mazda Dealer.

▼ Theft-Deterrent Labels

Labels indicating that your vehicle is equipped with a Theft-Deterrent System are in the glove box.

Mazda recommends that you affix them to the lower rear corner of the front door windows.

Steering Wheel

⚠ WARNING

Adjusting the Steering Wheel:
Adjusting the steering wheel while the vehicle is moving is dangerous. Moving it can very easily cause the driver to abruptly turn to the left or right. This can lead to loss of control or an accident. Never adjust the steering wheel while the vehicle is moving.

▼ Tilt Steering Wheel

To change the angle of the steering wheel, stop the vehicle, pull the tilt wheel release lever under the steering column down, adjust the wheel, then push the release lever up to lock the column.

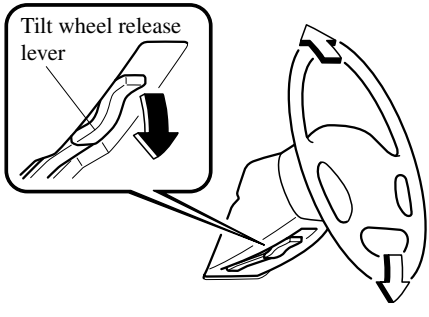

After adjusting, push the wheel up and down to be certain it's locked before driving.

Mirrors

▼ Outside Mirrors

Check the mirrors' angles before driving.

⚠ WARNING

Convex Mirror (Passenger Side):
Changing lanes without taking into account the actual distance of the vehicle in the convex mirror is dangerous. You could have a serious accident. What you see in the convex mirror is closer than it appears. Be sure to look over your shoulder or to check your inside mirror before changing lanes.

Manual control mirror

Adjust by hand.

Power control mirror

The ignition switch must be in the ACC or ON position.

To adjust:

1. Move the selector switch to the left or right to choose the mirror.

2. Depress the perimeter switch in the appropriate direction.

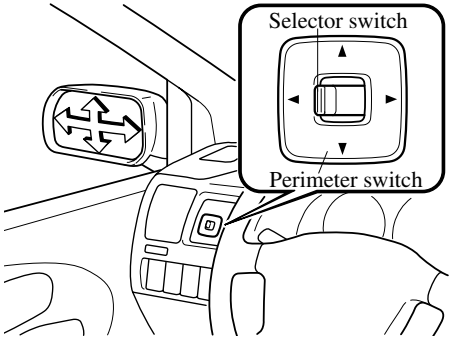

After adjusting the mirror, lock the control by moving the selector switch to the middle position.

Folding the mirror

Fold the outside mirror rearward until it is flush with the vehicle.

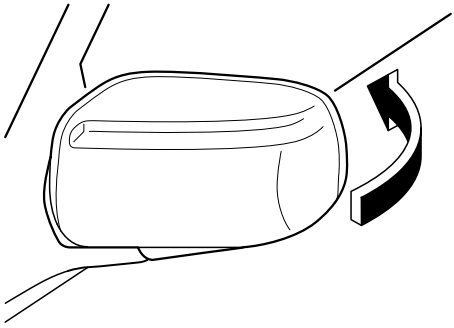

⚠ WARNING

Driving with Mirrors Folded In:
Driving with the outside mirrors folded in is dangerous. Your rear view will be restricted, and you could have an accident. Always return the outside mirrors to the driving position before you start driving.

Mirror defroster

To turn on the mirror defrosters, turn the ignition on and push the rear window defroster switch (page 5-36).

▼ Rearview Mirror (With Day/ Night Function)

Before driving, adjust the rearview mirror to center on the scene through the rear window.
Do this with the day/night lever in the day position.

Push the lever forward for day driving. Pull it back to reduce glare from headlights.

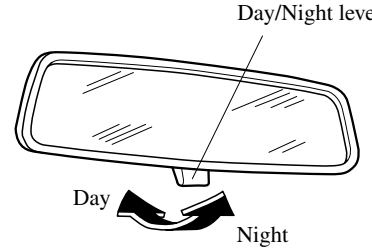

⚠ *WARNING*

Blocked View:
Cargo stacked higher than the seatbacks is dangerous. It can block your view in the rearview mirror, which might cause you to hit another car when changing lanes. Don't stack things higher than the seatbacks.

4 Before Driving Your Mazda

Important information about driving your Mazda.

Fuel and Engine Exhaust Precautions 4- 2
Fuel Requirements 4- 2
Emission Control System 4- 3
Engine Exhaust (Carbon Monoxide) 4- 5

Before Starting the Engine 4- 6
Before Getting In 4- 6
After Getting In 4- 6

Driving Tips 4- 7
Break-In Period 4- 7
Money-Saving Suggestions 4- 7
Hazardous Driving 4- 8
Rocking the Vehicle 4- 8
Winter Driving 4- 9
Driving In Flooded Area 4-10
Overloading 4-11

Towing 4-12
Trailer Towing 4-12

Fuel and Engine Exhaust Precautions

Fuel Requirements

Vehicles with catalytic converters or oxygen sensors must use ONLY UNLEADED FUEL, which will reduce exhaust emissions and keep spark plug fouling to a minimum.

Fuel with a lower rating could cause the emission control system to lose effectiveness. It could also cause engine knocking and serious engine damage.

Your Mazda will perform best with fuel listed in the table.

Fuel	Octane Rating* (Anti-knock index)
Regular unleaded fuel	87 [(R+M)/2 method] or above (91 RON or above)

*U.S. federal law requires that octane ratings be posted on gasoline station pumps.

Haiti, Ecuador, Venezuela

Use only premium unleaded fuel:91 [(R+M)/2 method] or above (96 RON or above)

⚠CAUTION

- USE ONLY UNLEADED FUEL.
  Leaded fuel is harmful to the catalytic converter or the oxygen sensor. The lead will accumulate on the oxygen sensor and the catalyst inside the converter. This will result in a malfunction of the emission control system, causing poor performance.
- Your vehicle can only use oxygenated fuels containing no more than 10% ethanol by volume. Damage to your vehicle may occur when ethanol exceeds this recommendation, or if the gasoline contains any methanol. Stop using gasohol of any kind if your vehicle engine is performing poorly.
- Never add fuel system additives. Never add cleaning agents other than those specified by Mazda. Other cleaning agents and additives may damage the system. Consult an Authorized Mazda Dealer.

Gasoline blended with oxygenates such as alcohol or ether compounds are generally referred to as oxygenated fuels. The common gasoline blend that can be used with your vehicle is ethanol blended at no more than 10%. Gasoline containing alcohol, such as ethanol or methanol, may be marketed under the name "Gasohol".

Vehicle damage and drivability problems resulting from the use of the following may not be covered by the Mazda warranty.

- Gasohol containing more than 10% ethanol.
- Gasoline or gasohol containing methanol.
- Leaded fuel or leaded gasohol.

Emission Control System

Your vehicle is equipped with an emission control system (the catalytic converter is part of this system) that enables your vehicle to comply with existing exhaust emissions requirements.

⚠ *WARNING*

Parking Over Things That Burn:
Parking over or near anything inflammable, such as dry grass, is dangerous. Even with the engine turned off, the exhaust system could ignite it because the exhaust system gets very hot during normal use. A resulting fire could cause serious injury or death. Never park over or near anything inflammable.

⚠ CAUTION

Ignoring the following precautions could cause lead to accumulate on the catalyst inside the converter or cause the converter to get very hot. Either condition will damage the converter and cause poor performance.

- USE ONLY UNLEADED FUEL.
- Don’t drive your Mazda with any sign of engine malfunction.
- Don’t coast with the ignition switch turned off.
- Don’t descend steep grades in gear with the ignition switch turned off.
- Don’t operate the engine at high idle for more than 5 minutes.
- Don’t tamper with the emission control system. All inspections and adjustments must be made by a qualified technician.
- Don’t try to push-start or pull-start your vehicle.

NOTE

Under U.S. federal law, any modification to the original-equipment emission control system before the first sale and registration of a vehicle is subject to penalties. In some states, such modification made on a used vehicle is also subject to penalties.

Fuel and Engine Exhaust Precautions

NOTE
After driving some distance and turning off the engine, the sound of a valve opening and closing can be heard near the lower left part of the driver's seat or below the driver-side door from the outside, however this does not indicate an abnormality. Your vehicle has a self-checking device and it operates after turning off the engine.

Engine Exhaust (Carbon Monoxide)

⚠ *WARNING*

Carbon Monoxide:
Engine exhaust gas is dangerous. This gas contains carbon monoxide (CO), which is colorless, odorless, and poisonous. When inhaled, it can cause loss of consciousness and death. If you smell exhaust gas inside your vehicle, keep all windows fully open and contact an Authorized Mazda Dealer immediately.

Exhaust Gas in Enclosed Area:
Running the engine inside an enclosed area, such as a garage, is dangerous. Exhaust gas, which contains poisonous carbon monoxide, could easily enter the cabin. Loss of consciousness or even death could occur. Don't run the engine when inside an enclosed area.

Idling with the Windows Closed:
Exhaust gas is dangerous. When your vehicle is stopped with the windows closed and the engine running for a long time in an open area, exhaust gas, which contains poisonous carbon monoxide, could enter the cabin. Loss of consciousness or even death could occur. Open the windows or adjust the heating or cooling system to draw fresh air.

Snow Blocking the Exhaust Gas:
Running the engine when a vehicle is stopped in deep snow is dangerous. The exhaust pipe could be blocked by the snow, allowing exhaust gas to enter the cabin. Because exhaust gas contains poisonous carbon monoxide, anyone in the cabin could be injured or killed. Clear the snow from underneath and around your vehicle before starting the engine.

Before Starting the Engine

Before Getting In

- Be sure the windows, outside mirror(s), and outside lights are clean.
- Inspect inflation pressures and condition of tires.
- Look under the vehicle for any sign of a leak.
- If you plan to back up, make sure nothing is in your way.

NOTE
Engine oil, engine coolant, brake fluid, washer fluid, and other fluid levels should be inspected daily, weekly, or at refueling, depending on the fluid. See Maintenance, Section 8.

After Getting In

- Are all doors closed and locked?
- Are the inside and outside mirrors adjusted?
- Is everyone's seat belt fastened?
- Do all the lights work?
- Check all gauges.
- Check all warning lights when the ignition switch is turned to the ON position.
- Release the parking brake and make sure the parking brake warning light goes off.

Always be thoroughly familiar with your Mazda.

Break-In Period

No special break-in is necessary, but a few precautions in the first 1,000 km (600 miles) may add to the performance, economy, and life of your Mazda.

- Don’t race the engine.
- Don’t maintain one constant speed for long.
- Don’t drive constantly at full-throttle or high engine rpm for extended periods of time.
- Avoid unnecessary hard stops.
- Avoid full-throttle starts.
- Don’t tow a trailer.

Money-Saving Suggestions

How you operate your Mazda determines how far it will travel on a tank of fuel. Use these suggestions to help save money on fuel and repairs.

- Avoid long warm-ups. Once the engine runs smoothly, begin driving.
- Avoid fast starts.
- Keep the engine tuned. Follow the maintenance schedule (page 8-3) and have an Authorized Mazda Dealer perform inspections and servicing.
- Use the air conditioner only when necessary.
- Slow down on rough roads.
- Keep the tires properly inflated.
- Don’t carry unnecessary weight.
- Don’t rest your foot on the brake pedal while driving.
- Keep the wheels in correct alignment.
- Keep windows closed at high speeds.
- Slow down when driving in crosswinds and headwinds.

⚠ *WARNING*

Coasting:
Turning off the engine to coast down a hill is dangerous. This causes the loss of power steering and power brake control. Any loss of steering or braking control could cause an accident. Never turn off the engine and coast down a hill.

Hazardous Driving

⚠ WARNING

Downshifting on Slippery Surfaces:
Downshifting into lower gear while driving on slippery surfaces is dangerous. The sudden change in tire speed could cause the tires to skid. This could lead to loss of vehicle control and an accident. If it is necessary to downshift on slippery surfaces, be very careful.

When driving on ice or in water, snow, mud, sand, or similar hazard:

- Be cautious and allow extra distance for braking.
- Avoid sudden braking and quick steering.
- If your vehicle is not equipped with ABS, brake with the pedal by using a light up-down motion. Don't hold the pedal down constantly.
  If your vehicle is equipped with ABS, don't pump the brakes. Continue to press down on the brake pedal.
- If you get stuck, shift to 2 or 3 and accelerate slowly. Don't spin the front wheels.
- For more traction in starting, use sand, rock salt, chains, carpeting, or other nonslip material under the front wheels.

NOTE

Use snow chains only on the front wheels.

Rocking the Vehicle

⚠ WARNING

Spinning the Wheels:
When the vehicle is stuck, spinning the wheels at high speed is dangerous. The spinning tire could overheat and explode. This could cause serious injuries. Don't spin the wheels at more than 56 km/h (35 mph), and don't allow anyone to stand behind a wheel when pushing the vehicle.

⚠ CAUTION

Too much rocking may cause engine overheating, transaxle failure, and tire damage.

If you must rock the vehicle to free it from snow, sand, or mud, depress the accelerator slightly and slowly move the shift lever from D to R.

Winter Driving

- Carry emergency gear, including tire chains, window scraper, flares, a small shovel, jumper cables, and a small bag of sand or salt.

Ask a Mazda dealer to perform the following precautions:

- Have the proper ratio of antifreeze in the radiator.
- Inspect the battery and its cables. Cold reduces battery capacity.
- Use only cold-weather engine oil (page 8-9).
- Inspect the ignition system for damage and loose connections.
- Use washer fluid made with antifreeze—but don't use engine coolant antifreeze for washer fluid (page 8-16).
- Don't use the parking brake in freezing weather as the parking brake may freeze. Instead, shift to P and block the rear wheels.

▼Snow Tires

⚠ *WARNING*

Mixing Tire Types:
Using tires different in size or type is dangerous. Your vehicle's handling could be greatly affected and result in an accident. Use only the same size and type tires (snow, radial, or non-radial) on all four wheels.

⚠ CAUTION

Check local regulations before using studded tires.

Use snow tires on all four wheels

Your vehicle is originally equipped with all season radials designed to be used all year around. In some extreme climates you may find it necessary to replace them with snow tires during the winter months to further improve traction on snow and ice covered roads.
Don't go faster than 120 km/h (75 mph).
Inflate snow tires 30 kPa (0.3 kgf/cm^2, 4.3 psi) more than recommended on the tire pressure label (driver's door), but never more than the maximum cold-tire pressure shown on the tires.

▼Tire Chains

⚠CAUTION

- Chains may scratch or chip aluminum wheels. Install tire chains on steel wheels only.
- Chains may affect handling.
- Don't go faster than 50 km/h (30 mph) or the chain manufacturer's recommended limit, whichever is lower.
- Drive carefully and avoid bumps, holes, and sharp turns.
- Avoid locked-wheel braking.
- Don't use chains on the temporary tire; it may result in damage to the vehicle and to the tire.
- Don't use chains on roads that are free of snow or ice. The tires and chains could be damaged.

Check local regulations before using tire chains.
Install the chains on the front tires.
Don't use chains on the rear tires.
Use only SAE Class "S" chains, and make sure they fit.

Installing the chains

1. Remove the wheel covers, or the chain bands will scratch them.
2. Secure the chains on the front tires as tightly as possible. Always follow the chain manufacturer's instructions.
3. Retighten the chains after driving 1/2—1 km (1/4—1/2 mile).

Driving In Flooded Area

⚠WARNING

Driving with Wet Brakes:
Driving with wet brakes is dangerous. Increased stopping distance or the vehicle pulling to one side when braking could result in a serious accident. Light braking will indicate whether the brakes have been affected. Dry the brakes by driving very slowly and applying the brakes lightly until brake performance returns to normal.

⚠CAUTION

Make sure water does not enter the vehicle interior or the engine area. The vehicle interior could become wet or the engine could be damaged.

Overloading

⚠ *WARNING*

Vehicle Load Weight:
The gross axle weight rating (GAWR) and the gross vehicle weight rating (GVWR) of your vehicle are on the Motor Vehicle Safety Standard Label on the driver's door frame. Exceeding these ratings can cause an accident or vehicle damage. You can estimate the weight of your load by weighing the items (or people) before putting them in the vehicle. Be careful not to overload your vehicle.

Trailer Towing

Your Mazda was designed and built primarily to carry passengers and cargo.
If you must tow a trailer, follow these instructions because driver and passenger safety depends on proper equipment and safe driving habits. Towing a trailer will affect handling, braking, durability, performance, and economy.
Never overload vehicle or trailer. Consult an Authorized Mazda Dealer if you need further details.

⚠CAUTION

Don't tow a trailer during the first 1,000 km (600 miles) of your new Mazda. If you do, you may damage the engine, transaxle, differential, wheel bearings, and other power train components.

▼Weight Limits

TTW and GCWR

The total trailer weight (TTW), gross combined weight rating (GCWR), gross axle weight rating (GAWR), trailer load, and trailer tongue load must be within the prescribed limits.

- **The total trailer weight (TTW) is the sum of the weights of the trailer load (trailer weight plus cargo), trailer hitch, vehicle passengers, and vehicle load. Never allow the total trailer weight (TTW) to exceed specifications in the Trailer Towing-Load Table.**
- **The maximum GCWR is the combined weight of the trailer and load plus the towing vehicle (including trailer hitch, vehicle passengers, and load). It must not exceed specifications in the load table.**

GAWR and GVWR

Don't exceed front and rear GAWR (gross axle weight rating) and GVWR (gross vehicle weight rating). If you do, vehicle handling, braking, and performance will be affected. These values are also on the Motor Vehicle Safety Certification Label posted on the driver's door.

High-altitude operation

In a high-altitude operating environment, a gasoline engine loses power at a rate of 3% to 4% per 304 m (1,000 ft) of elevation. In these conditions, a reduction in gross vehicle weight and gross combined weight is recommended.

TRAILER TOWING-LOAD TABLE

Because vehicle weights vary, adjustments must be made to meet the requirements in this table.

kg (lb)

Item \ Model			With 4-Seasons Package	Without 4-Seasons Package
MAX. FRONTAL AREA			2.97m^2(32 ft^2)	
MAX. TTW	Add trailer's weight, load and hitch; vehicle passengers and vehicle load* *i.e. baggage, food, camp gear		1,361 (3,000)	907 (2,000)
MAX. GCWR			3,324 (7,328)	2,871 (6,329)
MAX. GAWR		**Front**	1,180 (2,601)	
		Rear	1,214 (2,676)	
MAX. GVWR			2,372 (5,229)	
TRAILER-TONGUE LOAD	Tongue load / Trailer load		Tongue load/ Trailer load × 100 = 10% to 15%	
DISTRIBUTION OF TRAILER LOAD		**Front**	60%	
		Rear	40%	

The optional 4-Seasons Package: Including among others, automatic transaxle oil cooler and large radiator. Vehicles with the 4-Seasons Package can tow a heavier trailer and carry more cargo weight than standard-equipped vehicles.
GCWR: Gross Combined Weight Rating (sum of TTW, vehicle weights and 2 passengers)
GAWR: Gross Axle Weight Rating
GVWR: Gross Vehicle Weight Rating

⚠ WARNING

Tow Loads:
Attempting to tow loads greater than those specified is dangerous as it may cause serious handling and performance problems that could result in personal injury or vehicle damage, or both. Always keep tow loads within specified limits in the Trailer Towing-Load Table.

Trailer Loading:
Loading the trailer with more weight in the rear than in the front is dangerous. Doing so could cause you to lose control. The trailer tongue load must be 10%-15% of the total trailer load (sum of the weights of the trailer and cargo). Try to load the trailer with the weight about 60% toward the front and 40% toward the rear.

Determining Total Trailer Weight and Tongue Load:
Attempting to tow loads without determining the total trailer weight and tongue load is dangerous. Trailer sway from crosswinds, rough roads or other causes could result in loss of control and a serious accident. Always have the total trailer weight and tongue load determined prior to departure.

⚠ CAUTION

The total trailer weight and tongue load can be determined by weighing the trailer on platform scales at a highway weight station or a trucking company.

▼ Trailer Hitch

Use only a hitch ball recommended by the trailer manufacturer that conforms to the gross trailer weight requirement.
When not towing a trailer, remove the trailer hitch (if detachable) to reduce the possibility of damage as a result of the vehicle being rear-ended.
When the trailer load is more than 907 kg (2,000 lb), use a frame-mounted weight-distributing hitch.

⚠ WARNING

Unsecured Hitch:
An unsecured trailer hitch is dangerous as it causes greater trailer sway from crosswinds, rough roads or other causes, resulting in loss of control and a serious accident.
Examine all trailer-hitch mounting bolts regularly and tighten any that are loose. If the hitch is removed, seal any open mounting holes to prevent exhaust, dust, water, dirt and other foreign elements from filtering in, possibly endangering personal safety and damaging your vehicle.
Don't install a hitch that stiffens the bumper as it will reduce the bumper's performance. Always make sure the hitch is securely attached before departure.

Exhaust System Modifications:
Modifying your vehicle exhaust system is dangerous. Exhaust gas entering the vehicle could kill you.
When mounting the trailer hitch, make no modifications to the vehicle exhaust system. Make sure there are no exhaust gas leaks into the passenger compartment if any mounting bolts are connected to the body.

⚠ CAUTION

- Make all hitch adjustments with actual loads. Don't load and unload vehicle while adjusting hitch. This action will change the vehicle height.
- Don't use an axle-mounted hitch. This may damage the axle and related parts.

▼ Tires

When towing a trailer, make sure all tires are inflated to the recommended cold-tire pressure, as indicated on the tire pressure chart on the driver's door. Trailer tire size, load rating, and inflation pressures should conform to tire manufacturer specifications.

⚠ WARNING

Using a Temporary Spare Tire when Towing:
Using a temporary spare tire on your vehicle when towing a trailer is dangerous as it could result in tire failure, loss of control, and injury to vehicle occupants. Never use a temporary spare when towing.

▼Safety Chains

Safety chains must be used as a precautionary measure should the trailer become unintentionally unhitched. They should cross under the trailer tongue and attach to the hitch. Leave enough slack to allow full turns. Consult literature published by your trailer or hitch manufacturer for more details.

⚠ *WARNING*

Towing Without Safety Chain:
Towing a trailer without using a safety chain securely attached to both the trailer and the vehicle is dangerous. If damage occurs to the coupling unit or hitch ball, the trailer could wander into another lane and cause a collision. Make sure the safety chain is securely attached to both the trailer and the vehicle prior to departure.

▼Trailer Lights

Trailer lights must comply with all federal, state, and local regulations. Equip your trailer as required before towing it day or night.

⚠ CAUTION

Don’t connect a trailer lighting system directly to the lighting system of your Mazda. This may damage your vehicle’s electrical system and lighting systems. Have a recreational vehicle dealer or trailer rental agency connect the system, and inspect the brake lights and turn signals each time before driving.

▼Trailer Brakes

If the total trailer weight exceeds 450 kg (1,000 lb), trailer brakes are required. If your trailer has brakes, make sure they comply with all federal, state, and local regulations.

⚠ *WARNING*

Hydraulic Trailer-Brake System:
Connecting a hydraulic trailer-brake system directly to the vehicle brake system is dangerous and will result in inadequate braking and possible injury. Don’t connect a hydraulic trailer-brake system to your vehicle’s brake system.

▼Trailer Towing Tips

- Verify that your Mazda maintains a near-normal attitude when a loaded or unloaded trailer is connected. Don't drive if it has an abnormal front-up or front-down position. Inspect for incorrect tongue load, worn suspension parts, and trailer overloading.
- Make sure the trailer is properly loaded and the cargo is secure to prevent it from shifting.
- Make sure the mirrors conform to all government regulations. If they do not, install required rear view mirrors appropriate for towing purposes.

The three main causes of vehicle-trailer accidents are driver error, excessive speed, and improper trailer loading.

Before driving

- Have your cooling and braking system checked by an Authorized Mazda Dealer.
- Before starting out, inspect the operation of all vehicle and trailer lights and all vehicle-to-trailer connections. Stop and re-inspect all lights and connections after driving a short distance.

Driving

- Your Mazda will handle differently with a trailer in tow, so practice turning, backing, and stopping in a traffic-free area.
- Take time to get accustomed to the extra weight and length.
- Allow more room between your vehicle and the one in front because braking distance increases with a trailer. For each 16 km/h (10 mph) of speed, allow at least one vehicle and trailer length between your Mazda and the vehicle ahead.
- Avoid jerky starts or sudden acceleration.
- Avoid sudden braking. It may cause loss of control and result in jackknifing, especially so on wet or slippery roads.
- Use the following positions when towing a trailer in hilly terrain or when heavily loaded.
  - OD (overdrive) off
  - Shift lever in D

These positions will allow operating the vehicle without frequent shifting.

Lane changes and turning

Avoid quick lane changes, sudden turns, and tight turns. Slow down before turning to avoid the need of sudden braking.
A turning trailer will make a tighter arc than the tow vehicle. Compensate with turns that are larger than normal.

Passing

Plan well ahead to pass other vehicles, and provide plenty of room before changing lanes. Crosswinds from passing vehicles, especially larger ones, and the effects of rough roads will affect handling.
If swaying occurs, firmly grip the steering wheel and reduce speed immediately, but gradually.
Steer straight ahead. If no extreme correction of steering or braking is made, the combination of less speed and firm steering will result in stability.

Backing up

Backing a vehicle with a trailer requires practice and patience. Back slowly, and have a helper outside at the rear of the trailer to reduce the risk of an accident.
To turn the trailer, place your hand at the bottom of the steering wheel and turn it in the direction you want the trailer to go. Make only slight movements to prevent sharp or prolonged turning.

Ascending a hill

Shift into a lower gear to reduce the possibility of overloading or overheating the engine, or both.

Descending a hill

Shift into a lower gear and use engine compression as a braking effect.

⚠ *WARNING*

Over Use of the Brake Pedal:
Holding the brake pedal down too long or too frequently is dangerous as it could cause the brakes to overheat and lose power, resulting in loss of control and a serious accident. Use lower gears (1st and 2nd) to help reduce speed. Pull off the road and allow brakes to cool down whenever braking performance feels reduced. Always use lower gears to reduce speed.

Overheated engine

The extra weight of the trailer may strain the engine on hot days and on long or steep upgrades.
If the temperature gauge indicates overheating, turn off the air conditioner, drive safely to the side of the road, park off the right-of-way and wait for engine to cool. Refer to Overheating (page 7-15).

Parking

Always make sure the tires of the trailer and the tow vehicle are blocked while parked. Apply the parking brake firmly and put the transaxle in P.

Avoid parking on an incline, but if you must, follow these instructions:

1. Depress and hold down the brake pedal.
2. Have a helper put wheel blocks against the downhill side of all vehicle and trailer tires.
3. Then release the brake pedal slowly until the blocks bear the load.
   - If the grade is downhill, turn the steering wheel so that the front of the front tires face the curb.
   - If it is uphill, face the rear of the front tires against the curb.
4. Firmly apply the parking brake.
5. Shift the transaxle into P, and stop the engine.

To restart after parking on an incline:

1. With the transaxle in P, start the engine. (Be sure to depress and hold the brake pedal.)
2. Shift into gear.
3. Release the parking brake (also the foot brake) and pull away from the wheel blocks. Stop; apply the parking brake and shift into P.
4. Have a helper retrieve the wheel blocks.

Fuel consumption

Trailer towing causes higher fuel consumption.

Maintenance

If you tow a trailer frequently, have your vehicle serviced as shown in Scheduled Maintenance (page 8-3).

5 Driving Your Mazda

Explanation of instruments and controls.

Starting and Driving 5- 2
Ignition Switch 5- 2
Starting the Engine 5- 3
Brake System 5- 4
Automatic Transaxle Controls 5- 8
Power Steering 5-12
Cruise Control 5-13
Traction Control System (TCS) 5-16

Instrument Cluster and Indicators 5-19
Meters and Gauges 5-19

Warning/Indicator Lights and Beeps 5-23
Warning/Indicator Lights 5-23
Beeps 5-31

Switches and Controls 5-32
Lighting Control 5-32
Turn and Lane-Change Signals 5-33
Fog Lights 5-34
Windshield Wipers and Washer 5-34
Rear Window Wiper and Washer 5-36
Rear Window Defroster 5-36
Horn 5-37
Hazard Warning Flasher 5-37

Ignition Switch

▼Ignition Switch Positions

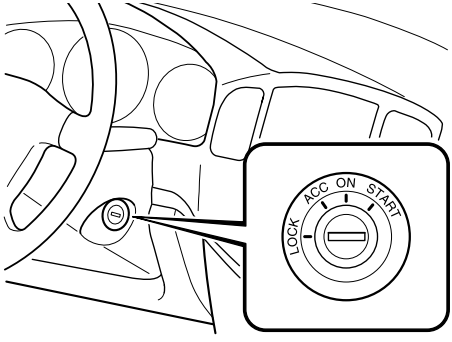

LOCK

The steering wheel locks to protect against theft. Only in this position can the key be removed.

⚠ *WARNING*

Removing the Key:
It's dangerous to remove the key from the ignition switch while the vehicle is moving. Removing the key allows the steering wheel to lock. You will lose steering control and a serious accident could occur.
Remove the key only when the vehicle is parked.

Not Setting the Parking Brake:
Leaving the driver's seat without setting the parking brake is dangerous. Unexpected vehicle movement could occur if the parking brake is not set. This could cause an accident. Before leaving the driver's seat, always set the parking brake and make sure the shift lever is in P.

NOTE

If turning the key is difficult, jiggle the steering wheel from side to side.

ACC (Accessory)

The steering wheel unlocks and some electrical accessories will operate.

ON

This is the normal running position after the engine is started. The warning lights (except brakes) should be inspected before the engine is started (page 5-23).

START

The engine is started in this position. It will crank until you release the key; then it returns to the ON position. The brake warning light can be checked after the engine is started (page 5-23).

▼Ignition Key Reminder

If the ignition switch is in the LOCK or ACC position, a beep will sound when the driver's door is opened.

Starting the Engine

NOTE

Engine-starting is controlled by the spark ignition system.
This system meets all Canadian Interference-Causing Equipment Standard requirements regulating the impulse electrical field strength of radio noise.

1. Occupants should fasten their seat belts.
2. Make sure the parking brake is on.
3. Depress the brake pedal.
4. Put the vehicle in park (P). If you must restart the engine while the vehicle is moving, shift into neutral (N).

NOTE

The starter will not operate if the shift lever is **not** in P or N.

5. Turn the ignition switch to the START position and hold (up to 10 seconds at a time) until the engine starts.

⚠CAUTION

Don't try the starter for more than 10 seconds at a time. If the engine stalls or fails to start, wait 10 seconds before trying again. Otherwise, you may damage the starter and drain the battery.

6. After starting the engine, let it idle for about 10 seconds.

NOTE

- In extremely cold weather, below -18°C (0°F), or after the vehicle has stood idle several days, let the engine warm up without operating the accelerator.
- Whether cold or warm, the engine should be started without use of the accelerator.

Brake System

▼Foot Brake

Your Mazda has power-assisted brakes that adjust automatically through normal use.

Should power-assist fail, you can stop by applying greater force than normal to the brake pedal. But the distance required to stop will be greater than usual.

⚠ *WARNING*

Driving with the Engine Off:
Continuing to drive when the engine is stalled or turned off is dangerous. Braking will require more effort, and the brake's power-assist could be depleted if you pump the brake. This will cause longer stopping distances or even an accident. Don't continue driving when the engine is stalled or turned off, find a safe place to stop.

Riding the Brakes:
Driving with your foot continuously on the brake pedal or steadily applying the brakes for long distances is dangerous. This causes overheated brakes, resulting in longer stopping distances or even total brake failure. This could cause loss of vehicle control and a serious accident. Avoid continuous application of the brakes. Shift to a lower gear when going down steep hills.

Driving with Wet Brakes:
Driving with wet brakes is dangerous. Increased stopping distance or the vehicle pulling to one side when braking could result in a serious accident. Light braking will indicate whether the brakes have been affected. Dry the brakes by driving very slowly and applying the brakes lightly until brake performance is normal.

▼Parking Brake

⚠CAUTION

Driving with the parking brake on will cause excessive wear of the brake linings or pads.

Setting the parking brake

Depress the brake pedal, then pull the brake handle fully upward.

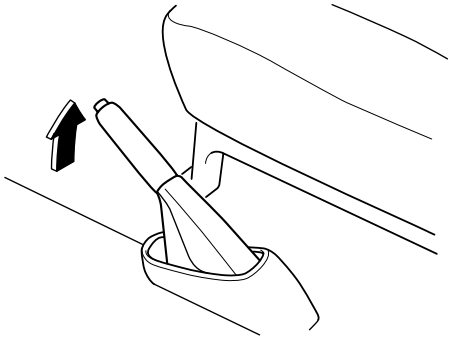

Releasing the parking brake

Depress the brake pedal, then pull the handle up and press the button. Lower the handle to the release position while holding in the button.

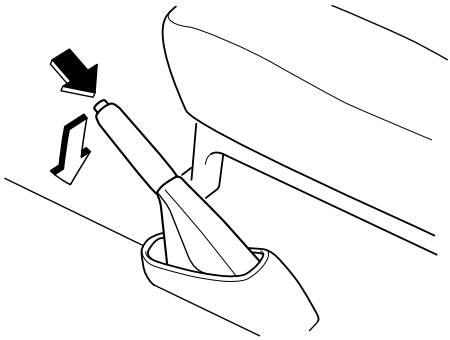

▼Brake System Warning Light

This warning has the following functions:

Parking brake warning

The light comes on when the parking brake is applied with the ignition switch in the START or ON position. It goes off when the parking brake is fully released.

Low brake fluid level warning/ Electronic brake force distribution system warning

If the light stays on after the parking brake is fully released, you may have a brake problem.

Drive to the side of the road and park off the right-of-way.

Low brake fluid level warning

You may notice that the pedal is harder to push or that it may go closer to the floor. In either case, it will take longer to stop the vehicle.

1. With the engine stopped, check the brake fluid level immediately and add fluid as required (page 8-13).
2. After adding fluid, check the light again.

If the warning light remains on, or if the brakes do not operate properly, do not drive the vehicle. Have it towed to an Authorized Mazda Dealer.

Even if the light goes off, have your brake system inspected as soon as possible.

Electronic brake force distribution system warning

If the electronic brake force distribution control unit determines that some components are operating incorrectly, the control unit may turn the brake system warning light on.
In this case, the ABS warning light comes on at the same time (page 5-27).

⚠ *WARNING*

Brake Warning Light:
Driving with the brake system warning light on is dangerous. It indicates that your brakes may not work at all or that they could completely fail at any time. If this light remains on, have the brakes inspected immediately. Don't drive with this light on, and contact an Authorized Mazda Dealer to have the brakes inspected as soon as possible.

ABS Warning Light and Brake Warning Light on at the Same Time:
Driving when the brake system warning light and ABS warning light are on at the same time is dangerous. When both lights are on, the rear wheels could lock more quickly in an emergency stop than under normal circumstances.
Don't drive with both lights on, and contact an Authorized Mazda Dealer to have the brakes inspected as soon as possible.

▼Anti-Lock Brake System (ABS)

The ABS control unit continuously monitors the speed of each wheel. If one is about to lock up, the ABS responds by automatically releasing and reapplying that wheel's brake.

The driver will feel a slight vibration in the brake pedal and may hear a chattering noise from the brake system. This is normal when the ABS operates. Don't pump the brakes, continue to press down on the brake pedal.

⚠ *WARNING*

ABS:
The ABS cannot compensate for unsafe and reckless driving, excessive speed, tailgating (following another vehicle too closely), and hydroplaning (reduced tire friction and road contact because of water on the road surface). You can still have an accident. So don't rely on ABS as a substitute for safe driving.

NOTE

Braking distances may be longer on loose surfaces (snow or gravel, for example) which usually have a hard foundation. A vehicle with a normal braking system may require less distance to stop under these conditions because the tires will build up a wedge of surface layer when the wheels skid.

▼ABS Warning Light

The warning light stays on for a few seconds when the ignition switch is turned to the ON position.

If the ABS warning light stays on while you're driving, the ABS control unit has detected a system malfunction. If this occurs, your brakes will function normally as if the vehicle had no ABS. Should this happen, consult an Authorized Mazda Dealer as soon as possible.

⚠ *WARNING*

ABS Warning Light and Brake Warning Light on at the Same Time:
Driving when the brake system warning light and ABS warning light are on at the same time is dangerous. When both lights are on, the rear wheels could lock more quickly in an emergency stop than under normal circumstances.
Don't drive with both lights on, and contact an Authorized Mazda Dealer to have the brakes inspected as soon as possible.

NOTE
When the engine is jump-started to charge the battery, uneven rpm occurs and the ABS warning light comes on. This is due to a weak battery, not a malfunction. Recharge the battery.

▼Brake Pad Wear Indicator

When the disc brake pads become worn, the built-in wear indicators contact the disc plates. This causes a screeching noise to warn that the pads should be replaced.

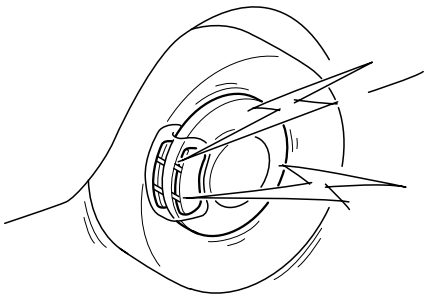

When you hear this noise, consult an Authorized Mazda Dealer as soon as possible.

⚠ *WARNING*
<u>Driving with Worn Disc Pads:</u> ***Driving with worn disc pads is dangerous. The brakes could fail and cause a serious accident. As soon as you hear a screeching noise consult an Authorized Mazda Dealer.***

Automatic Transaxle Controls

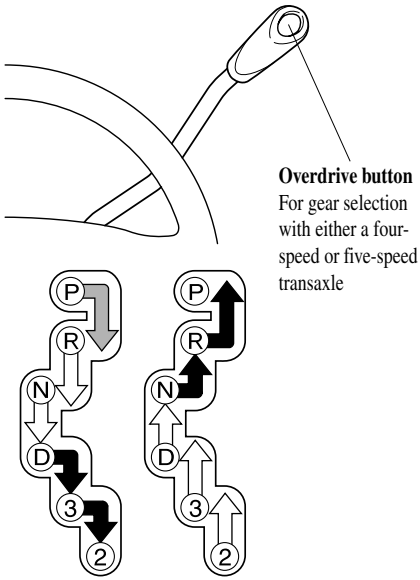

Various Lockouts:

⇨	Indicates that you must depress the brake pedal and pull the shift lever toward you to shift (The ignition switch must be in the ACC or ON position).
⇨	Indicates the shift lever can be shifted freely into any position.
➡	Indicates that you must pull the shift lever toward you to shift.

▼Transaxle Ranges

The shift lever must be in P or N to operate the starter.

NOTE

When shifting the automatic transaxle in extremely could temperature, the shift pattern indicator will respond more slowly than under normal conditions.

P (Park)

P locks the transaxle and prevents the front wheels from rotating.

⚠ WARNING

Holding the Vehicle with P:
Setting the shift lever to the P position without using the parking brake to hold the vehicle is dangerous. If P fails to hold, the vehicle could move and cause an accident. To hold the vehicle, set the shift lever to P AND set the parking brake.

⚠ CAUTION

- Shifting into P, N or R while the vehicle is moving can damage your transaxle.
- Shifting into a driving gear or reverse when the engine is running faster than idle can damage the transaxle.

R (Reverse)

In position R, the vehicle moves only backward. You must be at a complete stop before shifting to or from R, except as explained under Rocking the Vehicle (page 4-8).

N (Neutral)

In N, the wheels and transaxle are not locked. The vehicle will roll freely even on the slightest incline unless the parking brake or brakes are on.

⚠ WARNING

Shifting from N or P:
It's dangerous to shift from N or P into a driving gear when the engine is running faster than idle. If this is done, the vehicle could move suddenly, causing an accident or serious injury. If the engine is running faster than idle, don't shift from N or P into a driving gear.

Shifting into N while Driving:
Shifting into N while driving is dangerous. Engine braking cannot be applied when decelerating which could lead to an accident or serious injury. Do not shift into N when driving the vehicle.

D (Drive)

D is the normal driving position. From a stop, the transaxle will automatically shift through a 5-gear sequence.

3 (Third)

The 3 position is helpful when driving in heavy, slow-moving traffic and climbing hills, for engine braking assist when going down hills, or for starting on slick surfaces and other situations where gentle acceleration may be necessary.
Do not exceed 141 km/h (87 mph) in the 3 position.

2 (Second)

Use the 2 position for maximum power in hard-pulling situations, or for climbing and descending very steep grades.
Do not exceed 93 km/h (57 mph) in the 2 position.

⚠ *WARNING*

Sudden Engine-Braking:
Shifting down while driving on wet, snowy, or frozen roads, or driving at high speeds causes sudden engine braking, which is dangerous. The sudden change in tire speed could cause the tires to skid. This could lead to loss of vehicle control and an accident. Do not use sudden engine braking on slippery road surfaces or at high speeds.

▼Shift-Lock System

The shift-lock system prevents shifting out of P unless the brake pedal is depressed.

To shift from P:

1. Depress and hold the brake pedal.
2. Start the engine.
3. Move the shift lever.

NOTE

- When the ignition switch is in the LOCK position, the transaxle cannot be shifted from P.
- If the brake is pumped with the shift lever in P, a chattering near the shift lever may be heard. This does not indicate an abnormality.
- To be sure the vehicle is in park, **the ignition key cannot be removed unless the shift lever is in P.**

▼Shift-Lock Override

If the shift lever won't move from P with the brake pedal depressed, continue to hold down the pedal.

1. Remove the shift-lock override cover with a screwdriver or similar tool.
2. Push the shift-lock override button down.

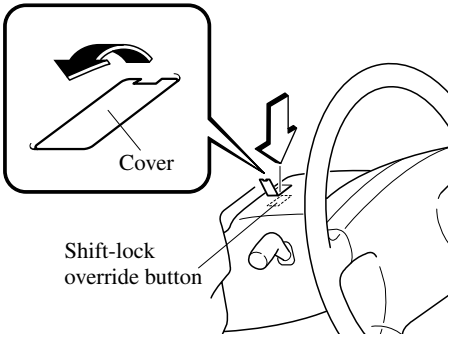

3. Move the shift lever.
4. Take the vehicle to an Authorized Mazda Dealer to have the system checked.

▼Overdrive

Overdrive operation

In D, the transaxle automatically shifts to overdrive, which improves fuel economy and reduces noise.

To allow engine braking when going down a steep grade, make sure the overdrive button is in the off position.

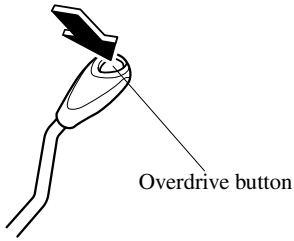

And for a smoother ride with less shifting, don't use it when:

- Going up a steep grade.
- Driving in stop-and-go traffic.
- Pulling heavy loads.

To turn off the overdrive, push the button.

The transaxle will then shift through a 4-gear sequence in D.
Shift patterns without overdrive:
D = 1st, 2nd, 3rd, 4th
3 = 2nd, 3rd
2 = 2nd

To turn it on, push the button again.

Shift patterns with overdrive:
D = 1st, 2nd, 3rd, 4th, 5th
3 = 2nd, 3rd
2 = 2nd

O/D OFF indicator light

This light comes on when the overdrive has been turned off.

⚠CAUTION

If the overdrive-off indicator light flashes, the transaxle has an electrical problem. Continuing to drive your Mazda in this condition could cause damage to your transaxle. Consult an Authorized Mazda Dealer as soon as possible.

▼Driving Tips

Passing

For extra power when passing another vehicle or climbing steep grades, depress the accelerator fully. The transaxle will shift to a lower gear, depending on vehicle speed.

Climbing steep grades from a stop

To climb a steep grade from a stopped position:

1. Depress the brake pedal.
2. Shift to D or 2, depending on the load weight and grade steepness.
3. Release all brakes while gradually accelerating.

Descending steep grades

When descending a steep grade, shift to 3 or 2, depending on load weight and grade steepness. Descend slowly, using the brakes only occasionally to prevent them from overheating.

Power Steering

Power steering is only operable when the engine is running. If the engine is off or if the power steering system is inoperable, you can still steer, but it requires more physical effort.

If the steering feels rigid during normal driving, consult an Authorized Mazda Dealer.

⚠ CAUTION

Never hold the steering wheel to the extreme left or right for more than 5 seconds with the engine running. This could damage the power steering system.

Cruise Control

With cruise control, you can set and automatically maintain any speed of more than about 40 km/h (25 mph).

⚠ *WARNING*

Cruise Control Use:
Using cruise control in the following conditions could cause you to lose control of the vehicle:
- ***Heavy or unsteady traffic***
- ***Slippery or winding roads***
- ***Similar restrictions that require inconsistent speed***

Don't use cruise control in these situations.

▼ Cruise Set Indicator Light

CRUISE

This light comes on when a cruising speed is set.

▼ Activation/Deactivation

To activate the system, push the CRUISE MAIN switch.

To deactivate the system, push the switch again.

⚠ *WARNING*

Cruise Main Switch:
Leaving the CRUISE MAIN switch on when not using the cruise control is dangerous as the cruise control lever could be bumped, activating the vehicle speed setting function. This could result in loss of vehicle control and an accident.
Make sure the CRUISE MAIN switch is off when cruise control is not in use.

▼ To Set Speed

1. Turn on the CRUISE MAIN switch.
2. Accelerate to the desired speed, which must be more than 40 km/h (25 mph).
3. Press the lever down to SET/COAST and release it at the speed you want. Release the accelerator at the same time.

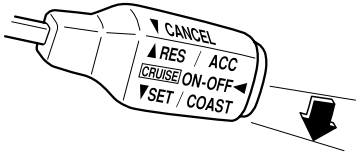

Don't continue to hold the lever. Until you release it, speed will continue to drop (unless you continue to accelerate) and you'll miss the desired speed.

NOTE

- The SET function can't be activated until about 2 seconds after the CRUISE MAIN switch has been engaged.
- On a steep grade, the vehicle may momentarily slow down going up or speed up while going down.

▼ To Increase Cruising Speed

Follow either of these procedures.

- Press the lever up to RES/ACC and hold it. Your vehicle will accelerate. Release the lever at the speed you want.

Your vehicle has a tap-up feature that allows you to increase your current speed in increments of 1.6 km/h (1 mph) by a momentary tap of the lever. Multiple taps will increase your vehicle speed 1.6 km/h (1 mph) for each tap.

- Accelerate to the desired speed. Press the lever down to SET/COAST and release it immediately.

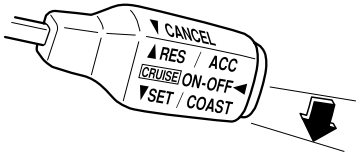

NOTE

Accelerate if you want to speed up temporarily when the cruise control is on. Greater speed will not interfere with it or change the set speed.
Take your foot off the accelerator to return to the set speed.

▼ To Decrease Cruising Speed

Press the lever down to SET/COAST and hold it. The vehicle will gradually slow. Release the lever at the speed you want.

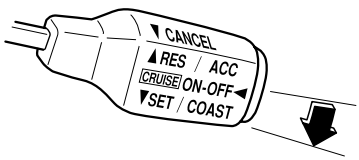

Your vehicle has a tap-down feature that allows you to decrease your current speed in decrements of 1.6 km/h (1 mph) by a momentary tap of the lever. Multiple taps will decrease your vehicle speed 1.6 km/h (1 mph) for each tap.

▼ To Resume Cruising Speed at More Than 40 km/h (25 mph)

If some other method besides the CRUISE MAIN was used to cancel cruising speed and the system is still activated, the most recent set speed will automatically resume when the lever is pressed up to RES/ACC, then released.
If vehicle speed is below 40 km/h (25 mph), increase the vehicle speed up to 40 km/h (25 mph) and press the lever up to RES/ACC.

NOTE

With an automatic transaxle vehicle, the gear is automatically selected when going uphill.

▼To Cancel

To turn off the system, use **one** of these methods:

- Press the CRUISE MAIN switch.
- Slightly depress the brake pedal.
- Pull the lever toward you.

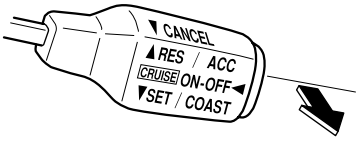

The system is off when the ignition is off.

NOTE
Cruise control will cancel at about 15 km/h (9 mph) below the preset speed or below 40 km/h (25 mph).

Traction Control System (TCS)

The Traction Control System (TCS) enhances traction and safety by regulating engine torque. When the TCS detects driving wheel slippage, it lowers engine torque to prevent loss of traction.

This means that on a slick surface, the engine adjusts automatically to provide optimum power to the drive wheels without causing them to spin and lose traction.

⚠ *WARNING*

TCS and Unsafe Driving:
The traction control system (TCS) cannot compensate for unsafe and reckless driving, excessive speed, tailgating (following another vehicle too closely), and hydroplaning (reduced tire friction and road contact because of water on the road surface). You can still have an accident. So don't rely on the traction control system as a substitute for safe driving.

TCS and Snow and Ice:
Driving without proper traction devices on snow and ice-covered roads is dangerous. The traction control system (TCS) alone cannot provide adequate traction and you could still have an accident. Use snow tires or tire chains and drive at reduced speeds when roads are covered with ice and snow.

▼TCS Indicator Light

TCS

This indicator light stays on for a few seconds when the ignition switch is turned to the ON position. If the TCS is operating, the indicator light flashes.

If the light stays on, the TCS may have a malfunction and it may not operate correctly. Take your vehicle to an Authorized Mazda Dealer.

NOTE

- In addition to the indicator light flashing, a slight lugging sound will come from the engine. This indicates that the TCS is operating properly.
- On slippery surfaces, such as fresh snow, it will be impossible to achieve high rpm when the TCS is on.

▼TCS OFF Indicator Light

TCS OFF

This light comes on when the ignition switch is turned to the ON position.
It goes off when the engine is started. It also comes on when you switch off the traction control system or when the system has a malfunction.

NOTE

After starting the engine on very cold days, the TCS OFF indicator will remain on and TCS will not operate until the engine is warm.

▼TCS OFF Switch

Press the TCS OFF switch to turn off the TCS. The TCS OFF indicator light will illuminate.

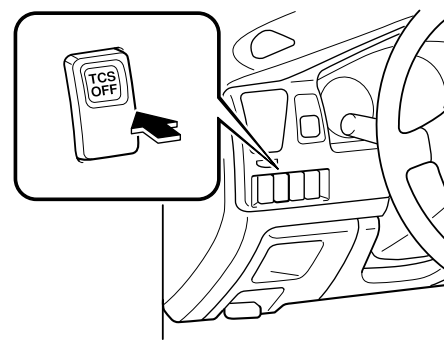

Press the switch again to turn the TCS back on. The TCS OFF indicator light will go out.

NOTE

- When TCS is on and you attempt to free the vehicle when it is stuck, or drive it out of freshly fallen snow, the TCS will activate. Depressing the accelerator will not increase engine power and freeing the vehicle may be difficult. When this happens, turn off the TCS.
- If the TCS is off when the engine is turned off, it automatically activates when the ignition switch is turned on.
- Leaving the TCS on will provide the best traction.

Meters and Gauges

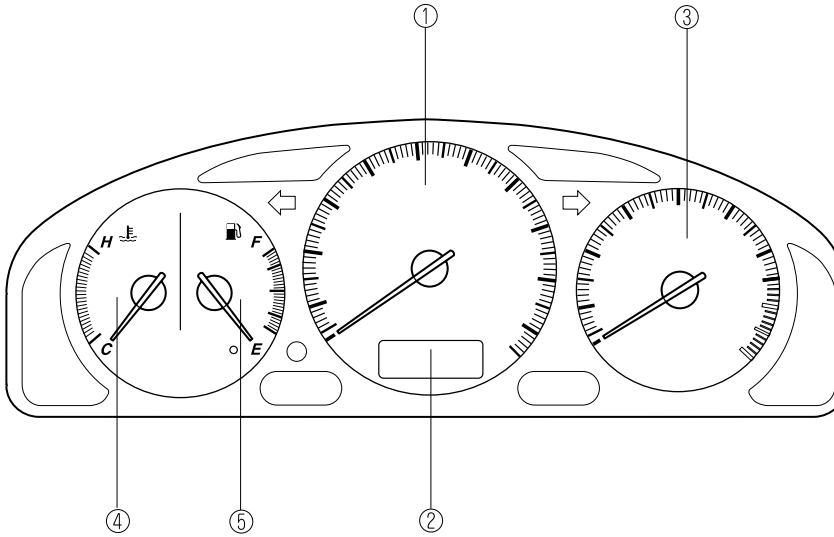

① Speedometer 5-20
② Odometer and Trip Meter 5-20
③ Tachometer 5-21
④ Engine Coolant Temperature Gauge.....5-21
⑤ Fuel Gauge..... 5-22

▼Speedometer

The speedometer indicates the speed of the vehicle.

▼Odometer and Trip Meter

The display mode can be changed from odometer to trip meter A to trip meter B and then back to odometer by pressing the selector while they are displayed. The selected mode will be displayed.

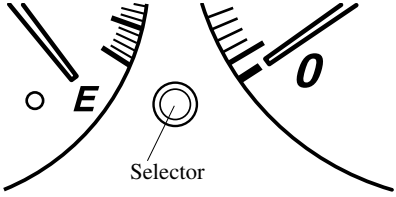

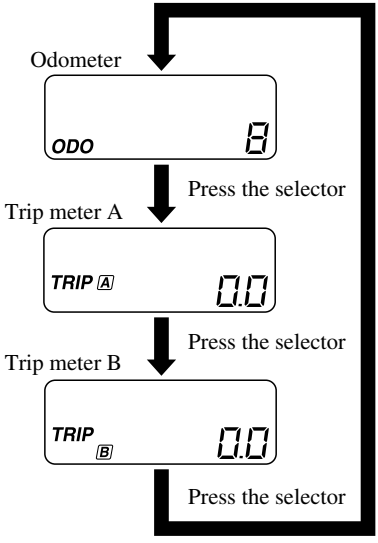

NOTE
The odometer and trip meter can be displayed as follows even when the ignition switch is in the LOCK position. • Displays for 10 minutes after the ignition switch is turned to the LOCK position from the ACC or ON position. • Displays for 10 minutes after any door is opened.

Odometer

When this mode is selected, ODO will be displayed.
The odometer records the total distance the vehicle has been driven.

Trip meter

The trip meter can record the total distance of two trips. One is recorded in trip meter A, and the other is recorded in trip meter B.

For instance, trip meter A can record the distance from the point of origin, and trip meter B can record the distance from where the fuel tank is filled.

When trip meter A is selected, pressing the selector again within one second will change to trip meter B mode.

When trip meter A is selected, TRIP A will be displayed. When trip meter B is selected, TRIP B will be displayed.

The trip meter records the total distance the vehicle is driven until the meter is again reset. Return it to "0.0" by holding the selector depressed for more than 1 second. Use this meter to measure trip distances and to compute fuel consumption.

NOTE

- Only the trip meters record tenths of kilometers (miles).
- The trip record will be erased when the vehicle is driven over 999.9 km (mile).

▼Tachometer

The tachometer shows engine speed in thousands of revolutions per minute (rpm).

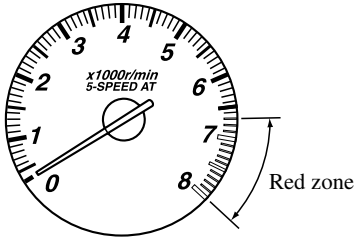

⚠CAUTION

Don’t run the engine with the tachometer needle in the RED ZONE. This may cause severe engine damage.

▼Engine Coolant Temperature Gauge

The engine coolant temperature gauge shows the temperature of the engine coolant.

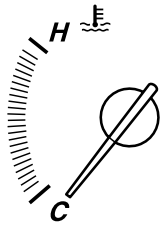

If the needle exceeds normal range toward H, it indicates overheating.

⚠CAUTION

Driving with an overheated engine can cause serious engine damage (page 7-15).

▼Fuel Gauge

The fuel gauge shows approximately how much fuel is in the tank. We recommend keeping the tank over 1/4 full. When the low fuel warning light illuminates or when the needle is near E, refuel as soon as possible.

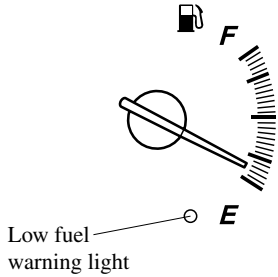

▼Dashboard Illumination

When the headlight switch is in the ≣DO≡ or ≣D≡D position, rotate the thumb-wheel to adjust the brightness of the dashboard lights.

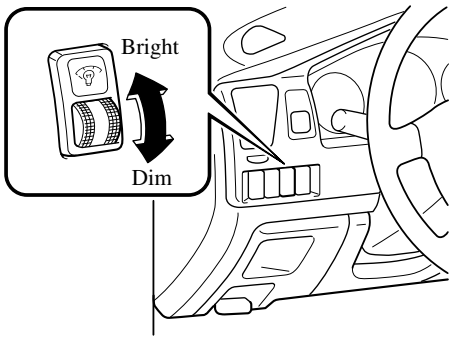

Warning/Indicator Lights

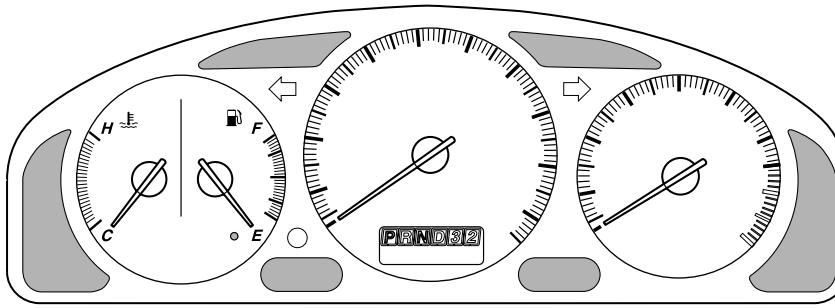

Warning/Indicator lights will appear in any of the highlighted areas

Signal	Warning/Indicator Lights	Page
BRAKE	Brake System Warning Light	5-25
	Charging System Warning Light	5-26
	Engine Oil Pressure Warning Light	5-26
	Check Engine Light	5-27
ABS	ABS Warning Light	5-27
	Air Bag/Front Seat Belt Pretensioner System Warning Light	5-28
E	Low Fuel Warning Light	5-28

Warning/Indicator Lights and Beeps

Signal	Warning/Indicator Lights	Page
	Seat Belt Warning Light	5-28
	Door-Ajar Warning Light	5-29
	Immobilizer System Warning/Security Indicator Light	5-29
	Headlight High-Beam Indicator Light	5-29
O/D OFF	O/D OFF Indicator Light	5-29
PRND32	Shift Position Indicator Light	5-30
TCS	TCS Indicator Light	5-30
TCS OFF	TCS OFF Indicator Light	5-30
CRUISE	Cruise Set Indicator Light	5-30

▼Brake System Warning Light

This warning has the following functions:

Parking brake warning

The light comes on when the parking brake is applied with the ignition switch in the START or ON position. It goes off when the parking brake is fully released.

Low brake fluid level warning/ Electronic brake force distribution system warning

If the light stays on after the parking brake is fully released, you may have a brake problem.

Drive to the side of the road and park off the right-of-way.

Low brake fluid level warning

You may notice that the pedal is harder to push or that it may go closer to the floor. In either case, it will take longer to stop the vehicle.

1. With the engine stopped, check the brake fluid level immediately and add fluid as required (page 8-13).
2. After adding fluid, check the light again.

If the warning light remains on, or if the brakes do not operate properly, do not drive the vehicle. Have it towed to an Authorized Mazda Dealer.

Even if the light goes off, have your brake system inspected as soon as possible.

Electronic brake force distribution system warning

If the electronic brake force distribution control unit determines that some components are operating incorrectly, the control unit may turn the brake system warning light on.
In this case, the ABS warning light comes on at the same time (page 5-27).

⚠ WARNING

Brake Warning Light:
Driving with the brake system warning light on is dangerous. It indicates that your brakes may not work at all or that they could completely fail at any time. If this light remains on, have the brakes inspected immediately. Don't drive with this light on, and contact an Authorized Mazda Dealer to have the brakes inspected as soon as possible.

ABS Warning Light and Brake Warning Light on at the Same Time:
Driving when the brake system warning light and ABS warning light are on at the same time is dangerous. When both lights are on, the rear wheels could lock more quickly in an emergency stop than under normal circumstances.
Don't drive with both lights on, and contact an Authorized Mazda Dealer to have the brakes inspected as soon as possible.

▼ Charging System Warning Light

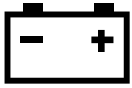

This warning light comes on when the ignition switch is turned to the ON position and goes off when the engine is started.

If the warning light comes on while driving, it indicates a malfunction of the alternator or of the charging system. Drive to the side of the road and park off the right-of-way. Consult an Authorized Mazda Dealer.

⚠ CAUTION

Don't continue driving when the charging system warning light is illuminated.

▼ Engine Oil Pressure Warning Light

This warning light indicates low engine oil pressure.

If the light comes on while driving:

1. Drive to the side of the road and park off the right-of-way.

2. Turn off the engine and inspect the engine oil level (page 8-9). If it's low, add oil.
3. Check the light.

If the light remains on even after you add oil, have your vehicle towed to the nearest service station or to an Authorized Mazda Dealer.

⚠ CAUTION

Don't run the engine if oil pressure is low. It could result in extensive engine damage.

▼ Check Engine Light

If this light comes on while driving, the vehicle may have a problem. It is important to note the driving conditions when the light came on and consult an Authorized Mazda Dealer.

The check engine light may come on in the following cases:

- The fuel tank level being very low or approaching empty.
- The engine's electrical system has a problem.
- The emission control system has a problem.
- The fuel-filler cap is missing or not tightened securely.

If the check engine light flashes continuously, decrease your speed and consult an Authorized Mazda Dealer as soon as possible.

▼ ABS Warning Light

The warning light stays on for a few seconds when the ignition switch is turned to the ON position.

If the ABS warning light stays on while you're driving, the ABS control unit has detected a system malfunction. If this occurs, your brakes will function normally as if the vehicle had no ABS. Should this happen, consult an Authorized Mazda Dealer as soon as possible.

⚠ *WARNING*

ABS Warning Light and Brake Warning Light on at the Same Time:
Driving when the brake system warning light and ABS warning light are on at the same time is dangerous. When both lights are on, the rear wheels could lock more quickly in an emergency stop than under normal circumstances.
Don't drive with both lights on, and contact an Authorized Mazda Dealer to have the brakes inspected as soon as possible.

NOTE

When the engine is jump-started to charge the battery, uneven rpm occurs and the ABS warning light comes on. This is due to a weak battery, not a malfunction.
Recharge the battery.

▼Air Bag/Front Seat Belt Pretensioner System Warning Light

If the air bag/front seat belt pretensioner system is OK, the warning light comes on when the ignition switch is turned to the ON position or after the engine is cranked. After about 6 seconds it goes out.

A system malfunction is indicated when the warning light constantly flashes, stays on or doesn't come on at all. If any of these occur, consult an Authorized Mazda Dealer as soon as possible. The system may not work in an accident.

⚠WARNING

Self-Servicing the Air Bag/ Pretensioner Systems:
Self-servicing or tampering with the systems is dangerous. An air bag/ pretensioner could accidentally activate or become disabled. This could cause serious injuries. Never tamper with the systems and always have an Authorized Mazda Dealer perform all servicing and repairs.

▼Low Fuel Warning Light

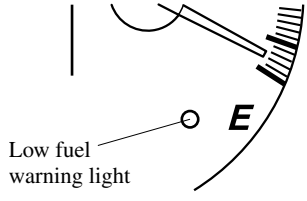

This warning light in the fuel gauge signals that the fuel tank will soon be empty.
Get fuel as soon as possible.

▼Seat Belt Warning Light

If the driver's seat belt is not fastened when the ignition switch is turned to the ON position, the seat belt warning light will remain on until the belt is fastened. If the system does not operate correctly, consult an Authorized Mazda Dealer.

▼Door-Ajar Warning Light

This warning light comes on when any door or liftgate isn't securely closed.

▼Immobilizer System Warning/ Security Indicator Light

Immobilizer system warning light

When the key is in the ignition switch, this light serves as the immobilizer system warning light.

If the immobilizer system is working properly, the light will come on when the ignition switch is turned to the ON or START position. The light will go out when confirmation by the immobilizer system is completed.

If the light flashes rapidly, fails to come on, or comes on and stays on, it indicates a system malfunction. If any of these occur, contact an Authorized Mazda Dealer as soon as possible.

Security indicator light

When there is no key in the ignition switch, and the theft-deterrent system has been armed, the light will flash once every 3 seconds. This indicates that the system is working properly.

▼Headlight High-Beam Indicator Light

This light indicates one of two things:

- The high-beam headlights are on.
- The turn signal lever is in the flash-to-pass position.

▼O/D OFF Indicator Light

This light comes on when the overdrive has been turned off.

⚠CAUTION

If the overdrive-off indicator light flashes, the transaxle has an electrical problem. Continuing to drive your Mazda in this condition could cause damage to your transaxle. Consult an Authorized Mazda Dealer as soon as possible.

▼Shift Position Indicator Light

This indicates the selected shift position when the ignition switch is in the ACC or ON position.

▼TCS Indicator Light

This indicator light stays on for a few seconds when the ignition switch is turned to the ON position. If the TCS is operating, the indicator light flashes.

If the light stays on, the TCS may have a malfunction and it may not operate correctly. Take your vehicle to an Authorized Mazda Dealer.

NOTE
• In addition to the indicator light flashing, a slight lugging sound will come from the engine. This indicates that the TCS is operating properly. • On slippery surfaces, such as fresh snow, it will be impossible to achieve high rpm when the TCS is on.

▼TCS OFF Indicator Light

This light comes on when the ignition switch is turned to the ON position.
It goes off when the engine is started. It also comes on when you switch off the traction control system or when the system has a malfunction.

NOTE
After starting the engine on very cold days, the TCS OFF indicator will remain on and TCS will not operate until the engine is warm.

▼Cruise Set Indicator Light

This light comes on when a cruising speed is set.

Beeps

▼Seat Belt Warning Beep

If the driver's seat belt is not fastened when the ignition switch is turned to the ON position, a beep will sound for about 6 seconds.

▼Ignition Key Reminder

If the ignition switch is in the LOCK or ACC position, a beep will sound when the driver's door is opened.

▼Lights-On Reminder

If lights are on and the key is removed from the ignition switch, a beep will sound when the driver's door is opened.

▼Power Sliding Door Buzzer

The buzzer sounds according to the power sliding door operation.
If there is a malfunction in the power sliding door system, the buzzer sounds continuously. If this happens, press the power sliding doors main switch to the OFF position and the buzzer will stop. Consult your nearest Authorized Mazda Dealer to have the power sliding doors checked.
Refer to Power Sliding Doors on page 3-12.

Lighting Control

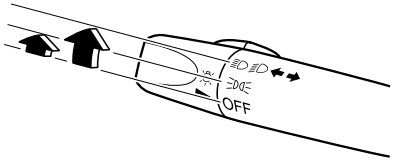

▼Headlights

To turn on the lights, turn the knob on the end of the control lever.

Lever Position	OFF		
Headlights	Off	Off	On
Taillights Parking lights License lights Side-marker lights	Off	On	On

NOTE

To prevent discharging the battery, don't leave the lights on while the engine is off.

▼Lights-On Reminder

If lights are on and the key is removed from the ignition switch, a beep will sound when the driver's door is opened.

▼Headlight High-Low Beam

Push the lever forward for high beam. Pull it back for low.

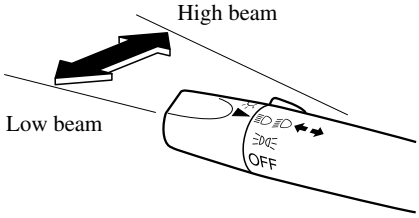

▼Flashing the Headlights

To flash the headlights, pull the lever fully toward you. The headlight switch need not be on, and the lever will return to the normal position when released.

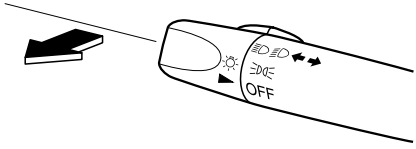

▼Daytime Running Lights (Canada Model)

In Canada, vehicles must be driven with the headlights on during daytime operation.

For that reason, the daytime running lights automatically turn on when the ignition switch is turned to the ON position.

NOTE
The running lights go off when the parking brake is applied.

Turn and Lane-Change Signals

▼Turn Signal

Move the signal lever down (for a left turn) or up (for a right turn) to the stop position. The signal will self-cancel after the turn is completed.

If the indicator light continues to flash after a turn, manually return the lever to its original position.

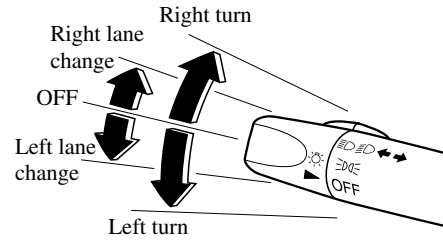

Green indicators on the dashboard show which signal is working.

Lane-change signals

Move the lever slightly toward the direction of the change—until the indicator flashes—and hold it there. It will return to the off position when released.

NOTE
If an indicator light stays on without flashing or if it flashes abnormally, the turn signal bulb may be burned out.

Fog Lights

Use this switch to turn on the fog lights. They help you to see as well as to be seen.

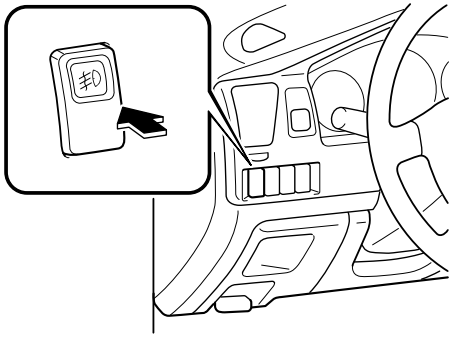

To turn on the fog lights, first turn on the headlight switch. Then press the fog light switch.
To turn the fog lights off, press the fog light switch again or turn the headlight switch off.

Windshield Wipers and Washer

The ignition switch must be in the ON position.

⚠ *WARNING*

Frozen Washer Fluid:
Using windshield washer fluid in freezing temperatures is dangerous. The washer fluid could freeze on the windshield and block your vision. You could have an accident. Don't use the washer without first warming the windshield.

NOTE

Because heavy ice and snow can jam the wiper blades, the wiper motor is protected by a circuit breaker. This mechanism will automatically stop operation of the blades, but only for about 5 minutes.
If this happens, turn off the wiper switch and park off the right-of-way, and remove the snow and ice.
After 5 minutes, turn on the switch and the blades should operate normally. If they don't resume functioning, consult an Authorized Mazda Dealer as soon as possible.

▼Windshield Wipers

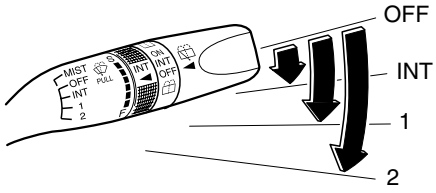

Turn the wipers on by pulling the lever down.
INT — Intermittent
1 — Normal
2 — Fast

Variable-speed intermittent wipers

Set the lever to INT and choose the interval timing by rotating the ring.

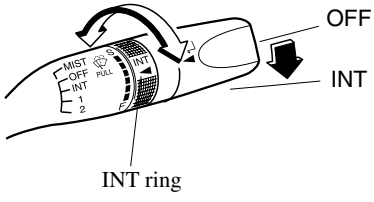

One-touch wipers

For a single wiping cycle, push the lever up to MIST.

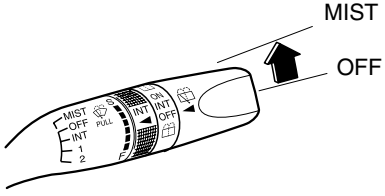

▼Windshield Washer

Pull the lever toward you and hold it to spray washer fluid.

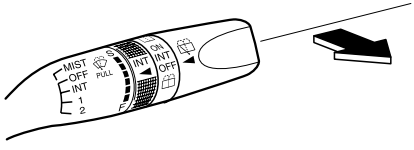

NOTE
In the OFF or INT position, the wipers will be activated until the lever is released.

If the washer doesn't work, inspect the fluid level (page 8-16). If it's OK, consult an Authorized Mazda Dealer.

Rear Window Wiper and Washer

The ignition switch must be in the ON position.

▼ Rear Window Wiper

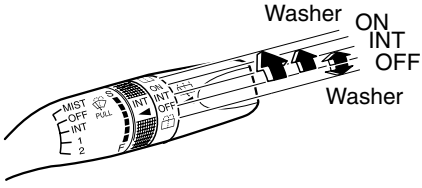

Turn the wiper on by turning the knob.
ON — Normal
INT — Intermittent

▼ Rear Window Washer

To spray washer fluid, turn the knob to the position. After the knob is released, the washer will stop.

NOTE
There are two washer positions: up and down. In the down washer position, the wiper will not be activated.

If the washer doesn't work, inspect the fluid level (page 8-16). If it's OK and the washer still doesn't work, consult an Authorized Mazda Dealer.

Rear Window Defroster

The rear defroster clears frost, fog, and thin ice from the rear window.

The ignition switch must be in the ON position.

Press the switch to turn on the rear window defroster, the indicator light will illuminate.

Press the switch again to turn it off.

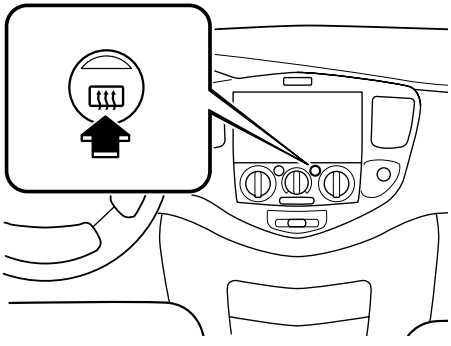

⚠ CAUTION
Don't use sharp instruments or window cleaners with abrasives to clean the inside of the rear window surface. They may damage the defroster grid inside the window.

NOTE
This defroster is not designed for melting snow. If there is an accumulation of snow on the rear window, brush it off before using the defroster.

Horn

To sound the horn, press around the mark of the steering wheel.

Hazard Warning Flasher

The hazard warning lights should always be used when you stop on or near a roadway.

The hazard warning lights warn other drivers that your vehicle is a traffic hazard and that they must take extreme caution when near it.

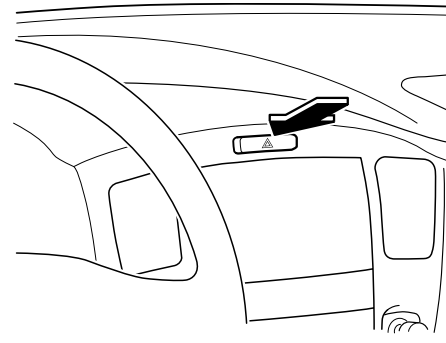

Depress the hazard warning switch and all four turn signals will flash at once.

NOTE

- The turn signals don't work when the hazard warning lights are on.
- Check local regulations about the use of hazard warning lights while the vehicle is being towed. They may forbid it.

6 Interior Comfort

Use of various features for drive comfort, including climate control and audio system.

Climate Control System 6- 2
Operating Tips 6- 2
Vent Operation (Front) 6- 3
Control Panel (Front) 6- 5
Vent Operation (Rear) 6-10
Control Panel (Rear) 6-12

Audio System 6-14
Antenna 6-14
Operating Tips for Audio System 6-14
Audio Set 6-21
Audio Control Switch Operation 6-38
Safety Certification 6-40

Interior Equipment 6-41
Sunvisors 6-41
Interior Lights 6-41
Lighter 6-44
Ashtray 6-44
Cup Holder 6-46
Bottle Holder 6-48
Storage Compartments 6-48
Accessory Sockets 6-52

Operating Tips

▼Operating the Climate Control System

Operate the climate control system with the engine running.

▼Clearing the Air Inlet

Clear all obstructions like leaves, snow and ice from the hood and the air inlet in the cowling grille to improve the system efficiency.

▼Foggy Windows

The windows may fog up easily in humid weather. Use the climate control system to defog the windows.

To help defog the windows, operate the air conditioner to dehumidify the air.

▼Outside/Recirculated Air Position

Use the outside air position in normal conditions. The recirculated air position can be used temporarily when driving on dusty roads or for quick cooling of the interior.

▼Parking in Direct Sunlight

If the vehicle has been parked in direct sunlight during hot weather, open the windows to let warm air escape, then run the climate control system.

▼Not Using for a Long Period

Run the air conditioner at least once a month to keep internal parts lubricated.

▼Check the Refrigerant before Weather Gets Hot

Have the air conditioner checked before the weather gets hot. Lack of refrigerant may make the air conditioner less efficient. Consult an Authorized Mazda Dealer for refrigerant inspection.

The optional air conditioner is filled with HFC134a (R134a), a refrigerant that will not damage the ozone layer.
If the air conditioner is low on refrigerant or has a malfunction, consult an Authorized Mazda Dealer.

▼Replacement of the Cabin Air Filter

If your vehicle is equipped with an air filter for the air conditioner, it is necessary to change the filter periodically as indicated in scheduled maintenance (page 8-3). Consult an Authorized Mazda Dealer for replacement of the cabin air filter.

Vent Operation (Front)

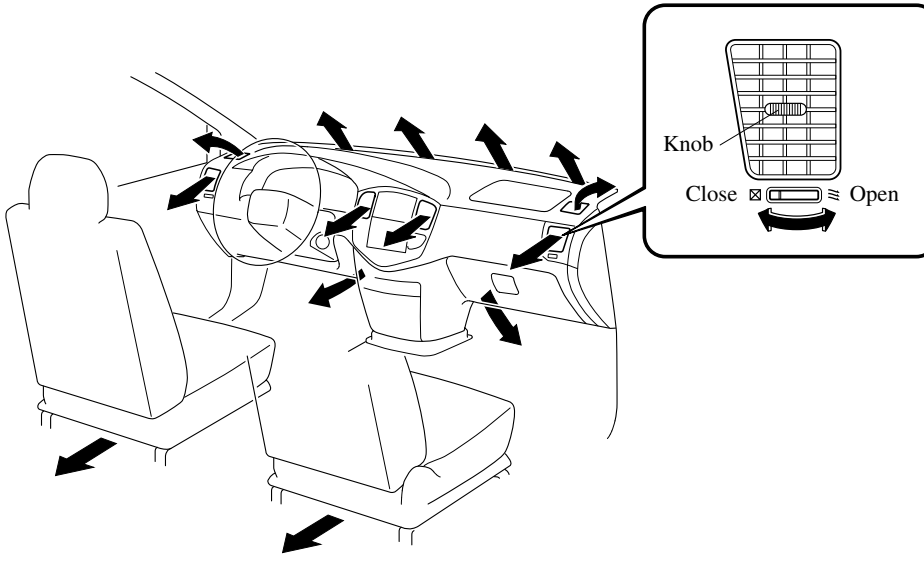

▼Adjusting the Vents

Directing airflow

You can direct air flow by moving the adjustment knob.
Horizontal air flow can be adjusted by pressing the vent left or right.

Adjusting the amount of airflow

These vents can be opened and closed with wheel.

NOTE
When using the air conditioner, mist may come out from the vents. This is not a sign of trouble but a result of humid air being suddenly cooled.

▼Selecting the Airflow Mode

Dashboard Vents

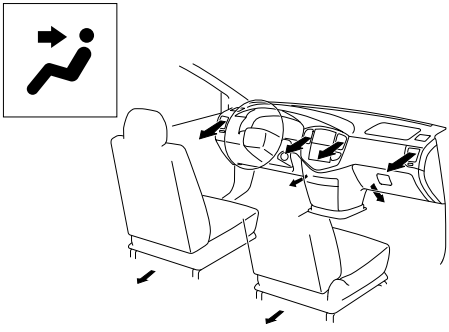

Defroster and Floor Vents

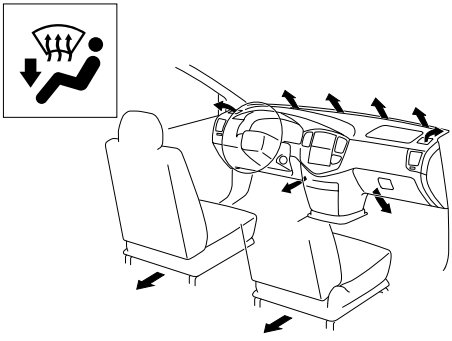

Dashboard and Floor Vents

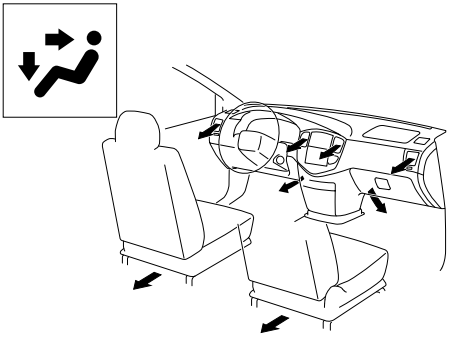

Defroster Vents

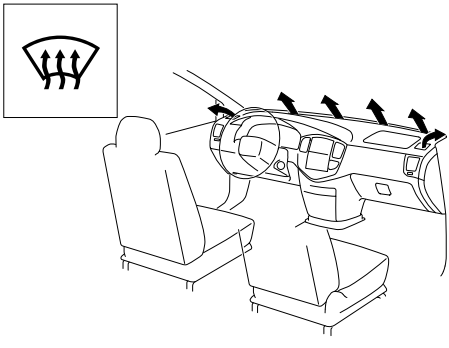

Floor Vents

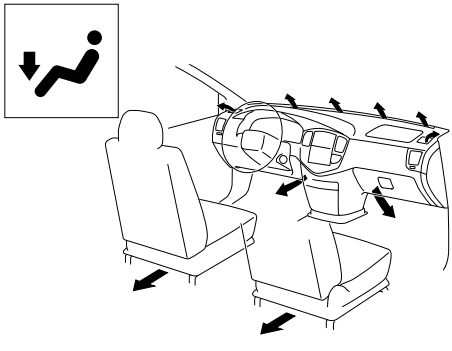

Control Panel (Front)

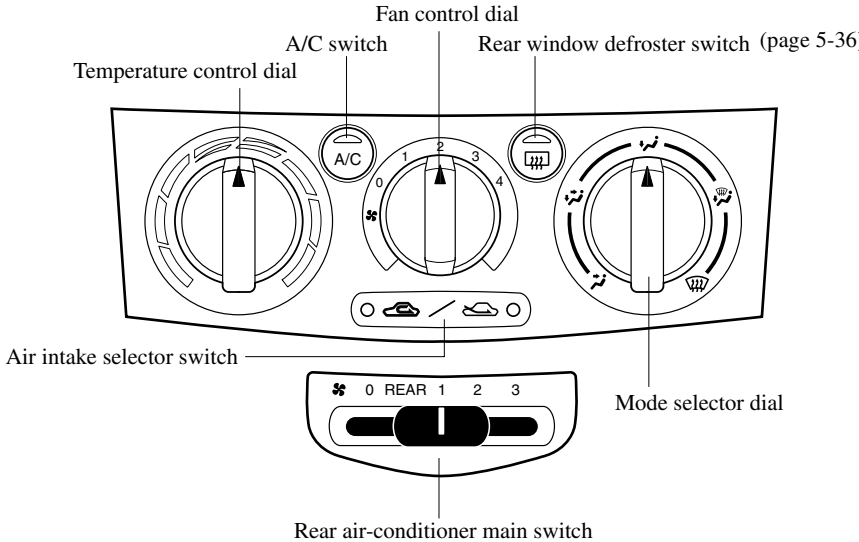

▼ Control Switches

Temperature control dial

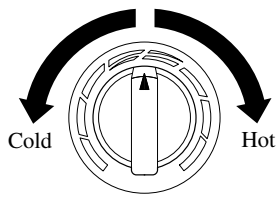

This dial controls temperature. Turn it clockwise for hot and counterclockwise for cold.

Fan control dial

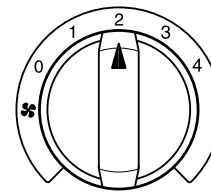

This dial allows variable fan speeds.
0—Fan off
1—Low speed
2—Medium low speed
3—Medium high speed
4—High speed

Climate Control System

Mode selector dial

Turn the mode selector dial to select airflow mode (page 6-4).

A/C switch

Push the switch to turn the air conditioner on. An indicator light on the switch will illuminate when the fan control dial is on.

Push the switch once again to turn the air conditioner off.

NOTE
The air conditioner may not function when the outside temperature approaches 0 °C (32 °F).

Air intake selector

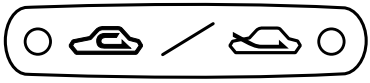

This switch controls the source of air entering the vehicle.

Press the switch to alternate between the and positions. The indicator light for the selected mode will illuminate.

It is recommended that under normal conditions the switch be kept in the outside air position.

Outside air position ( )

Outside air is taken into the vehicle. Use this position for normal ventilation and heating.

Recirculated air position ( )

Outside air is shut off. Air within the vehicle is recirculated.

This position can be used when driving on a dusty road or in similar conditions. It also helps to provide quicker cooling of the interior.

WARNING

The Recirculated Air Position:
Using the position in cold or rainy weather will cause the glass to fog up. Your vision will be hampered, which could lead to a serious accident. Do not use the position in cold or rainy weather.

▼Heating

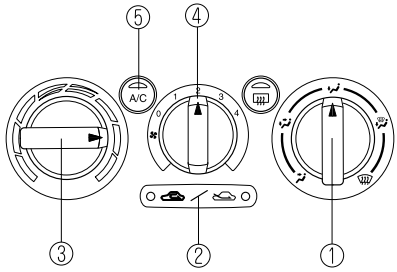

1. Set the mode selector dial to the position.
2. Set the air intake selector to the position.
3. Set the temperature control dial to the hot position.
4. Set the fan control dial to the desired speed.
5. If dehumidified heating is desired, turn on the air conditioner.

NOTE

- If the windshield fogs up easily, set the mode selector dial to the position.
- If cooler air is desired at face level, set the mode selector dial at the position and adjust the temperature control dial to maintain maximum comfort.
- The air to the floor is warmer than air to the face (except when the temperature control dial is set at the extreme hot or cold position).

▼Cooling (With Air Conditioner)

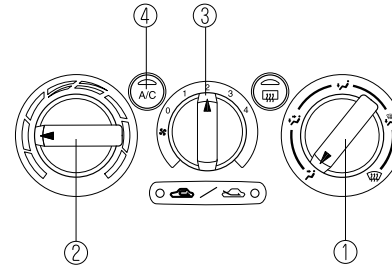

1. Set the mode selector dial to the position.
2. Set the temperature control dial to the desired position.
3. Set the fan control dial to the desired speed.
4. Turn on the air conditioner.

5. Adjust the fan control dial and temperature control dial to maintain maximum comfort.

⚠ CAUTION

When using the air conditioner while driving up long hills or in heavy traffic, closely monitor the temperature gauge (page 5-21).
The air conditioner may cause engine overheating. If the gauge indicates overheating, turn the air conditioner off.

NOTE

- When maximum cooling is desired, set the temperature control dial to the extreme cold position and set the air intake selector to the position, then set the fan control dial to the position 4.
- If warmer air is desired at floor level, set the mode selector dial at the position and adjust the temperature control dial to maintain maximum comfort.
- The air to the floor is warmer than air to the face (except when the temperature control dial is set at the extreme hot or cold position).

▼ Ventilation

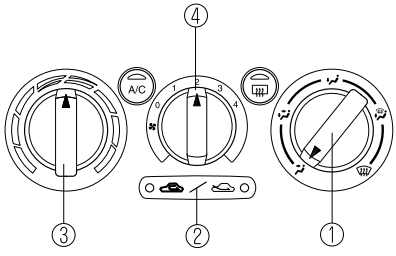

1. Set the mode selector dial to the position.
2. Set the air intake selector to the position.
3. Set the temperature control dial to the desired position.
4. Set the fan control dial to the desired speed.

▼ Windshield Defrosting and Defogging

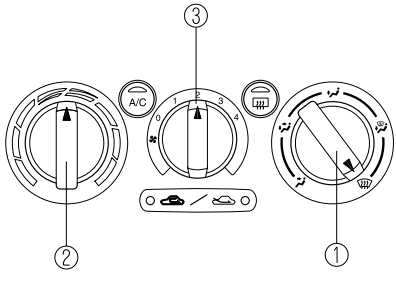

1. Set the mode selector dial to the position.
2. Set the temperature control dial to the desired position.

3. Set the fan control dial to the desired speed.

⚠ WARNING

Foggy Windshield:
Using the position with the temperature control set to the cold position will cause the outside of the glass to fog up. Your vision will be hampered, which could lead to a serious accident. Set the temperature control to the hot or warm position when using the position.

NOTE

- For maximum defrosting, set the temperature control dial to the extreme hot position and the fan control dial to position 4.
- If warm air is desired at the floor, set the mode selector dial to the position.
- In the or position, outside air is automatically selected.The air intake selector switch cannot be changed to the position.

▼Dehumidifying (With Air Conditioner)

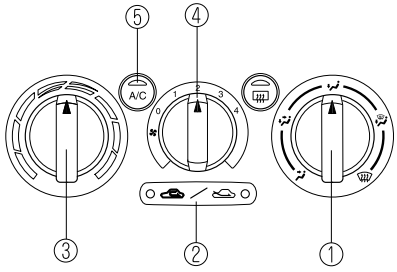

Operate the air conditioner in cool or cold weather to help defog the windshield and side windows.

1. Set the mode selector dial to the desired position.
2. Set the air intake selector to the position.
3. Set the temperature control dial to the desired position.
4. Set the fan control dial to the desired speed.
5. Turn on the air conditioner.

Vent Operation (Rear)

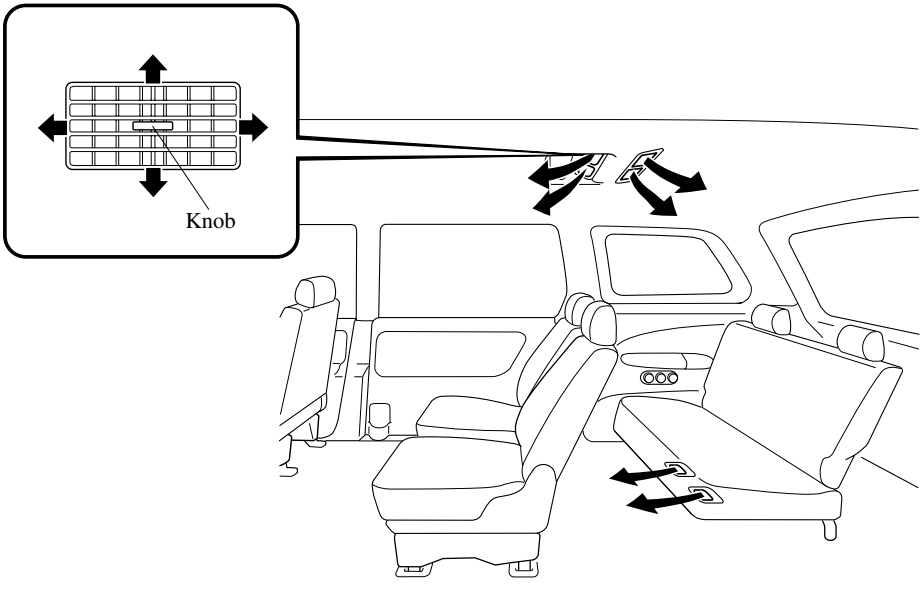

▼Adjusting the Vents

Directing airflow

You can direct air flow by moving the adjustment knob.

NOTE
When using the air conditioner, mist may come out from the vents. This is not a sign of trouble but a result of humid air being suddenly cooled.

▼Selecting the Airflow Mode

Floor Vents

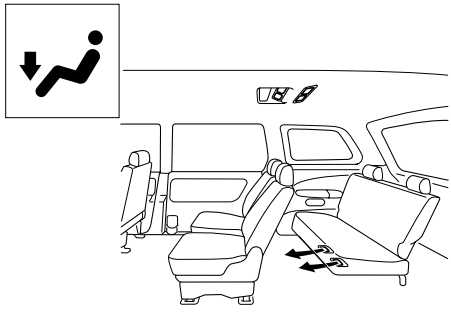

Roof Vents

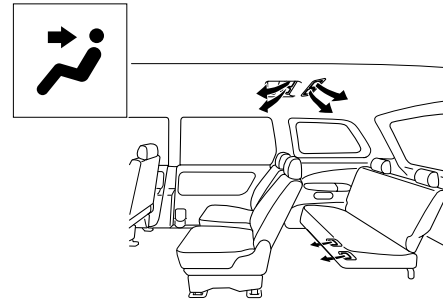

Roof and Floor Vents

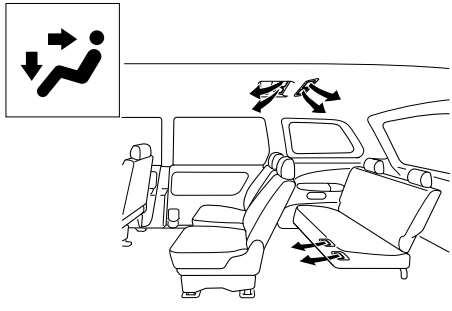

Control Panel (Rear)

Type A

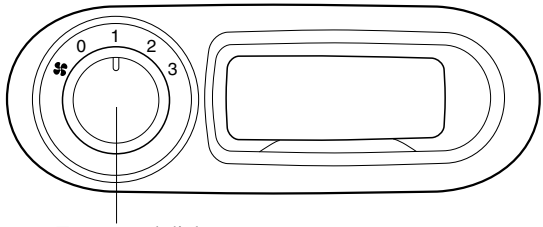

NOTE:

(Rear heater type)
Supplies only hot air out of floor outlets.

(Rear cooler type)
Supplies only cold air out of roof vents.

Type B

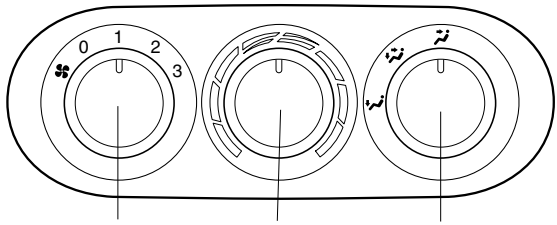

NOTE:

Supplies cold or hot air out of roof vents and/or floor outlets.

▼Control Switches

Rear air-conditioner main switch

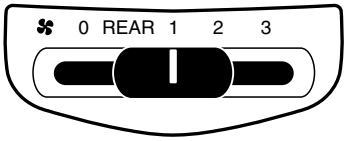

The air conditioner has front and rear controls. The front air-conditioner controls override the rear controls.

The rear air-conditioner main switch is under the front air-conditioner control panel.

This switch allows variable fan speeds for the rear air-conditioner.

0	— Fan off
REAR	— Select the desired fan speed with rear air-conditioner control panel.
1	— Low speed
2	— Medium speed
3	— High speed

Fan control dial

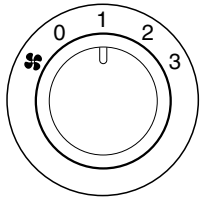

This dial allows variable fan speeds.

0—Fan off
1—Low speed
2—Medium speed
3—High speed

NOTE
When the rear air-conditioner main switch is not set to the REAR position, the fan control dial of the rear air-conditioner control panel does not work. The front air-conditioner controls override the rear controls.

Temperature control dial (Type B)

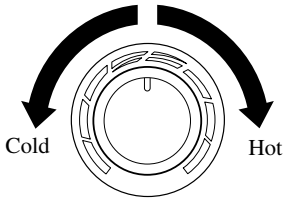

This dial controls temperature. Turn it clockwise for hot and counterclockwise for cold.

Mode selector dial (Type B)

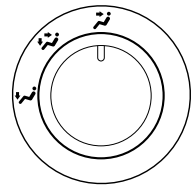

Turn the mode selector dial to select airflow mode (page 6-11).

Antenna

▼Detachable Type

To remove the antenna, turn it counterclockwise.
To install the antenna, turn it clockwise. Make sure the antenna is security installed.

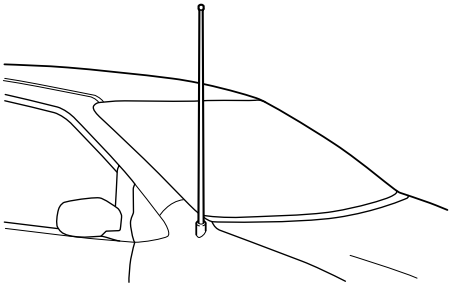

⚠CAUTION

To prevent damage to the antenna, remove it before entering a car wash facility or passing beneath a low overhead clearance.

NOTE

When leaving your vehicle unattended, we recommend that you remove the antenna and store it inside the vehicle.

Operating Tips for Audio System

▼Radio Reception

AM characteristics

AM signals bend around such things as buildings or mountains and bounce off the ionosphere. Therefore, they can reach longer distances than FM signals. Because of this, two stations may sometimes be picked up on the same frequency at the same time.

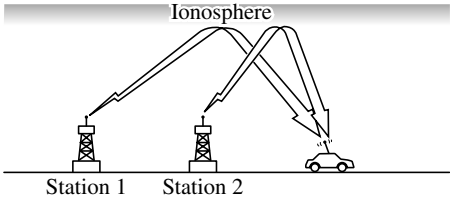

FM characteristics

An FM broadcast range is usually about 40—50 km (25—30 miles) from the source. Because of extra coding needed to break the sound into two channels, stereo FM has even less range than monaural (non-stereo) FM.

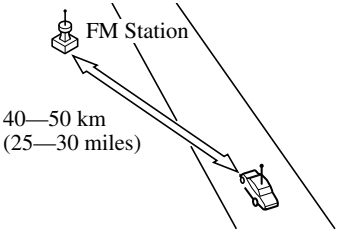

Signals from an FM transmitter are similar to beams of light because they do not bend around corners, but they do reflect. Unlike AM signals, FM signals cannot travel beyond the horizon. Therefore, FM stations cannot be received at the great distances possible with AM reception.

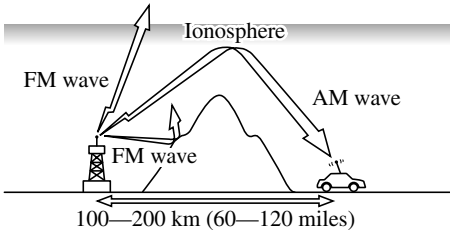

Atmospheric conditions can also affect FM reception. High humidity will cause poor reception. However, cloudy days may provide better reception than clear days.

Multipath noise

Since FM signals can be reflected by obstructions, it is possible to receive both the direct signal and the reflected signal at the same time. This causes a slight delay in reception and may be heard as a broken sound or a distortion. This problem may also be encountered when in close proximity to the transmitter.

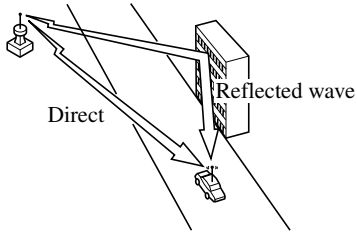

Flutter/Skip noise

Signals from an FM transmitter move in straight lines and become weak in valleys between tall buildings, mountains, and other obstacles. When a vehicle passes through such an area, the reception conditions may change suddenly, resulting in annoying noise.

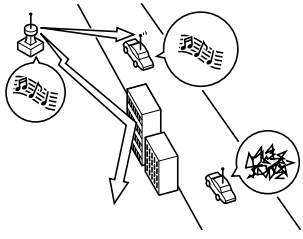

Weak signal noise

In suburban areas, broadcast signals become weak because of distance from the transmitter. Reception in such fringe areas is characterized by sound breakup.

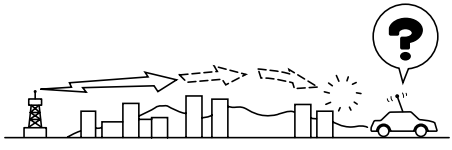

Strong signal noise

This occurs very close to a transmitter tower. The broadcast signals are extremely strong, so the result is noise and sound breakup at the radio receiver.

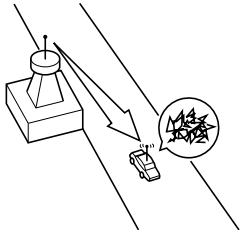

Station drift noise

When a vehicle reaches the area of two strong stations broadcasting at similar frequencies, the original station may be temporarily lost and the second station picked up. At this time there will be some noise from this disturbance.

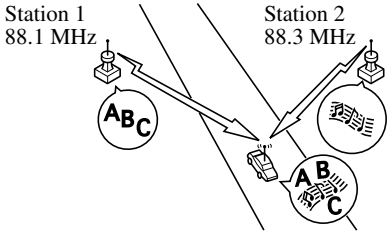

▼Operating Tips for Cassette Tape Player

Cleaning the cassette tape player

The tape head, capstans, and pinch rollers will gather oxide residue from cassette tapes. This can cause weak or wavering sounds and damage to the cassette tapes and player. Use a good quality head-cleaning tape or a liquid cleaner cassette tape to remove it.
Should the unit not operate normally, consult an Authorized Mazda Dealer. Never attempt to repair it or insert a screwdriver or anything else.

Handling the cassette tape player

The following precautions should be observed.

- Do not spill any liquid on the audio system.

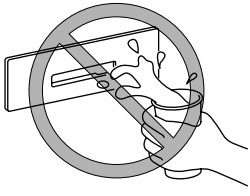

- Do not insert any objects, other than cassette tape, into the slot.

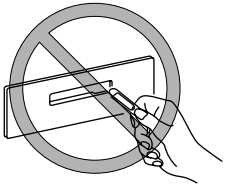

- If the cassette tape is loose, it may produce poor sound or performance during playback. Use a pencil or something similar to remove any slack.

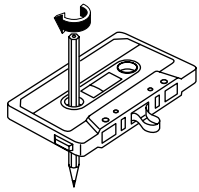

- Only cassette tapes that play no longer than 90 minutes should be used. Cassette tape exceeding 90 minutes are thin and may easily break.
- Do not leave a cassette tape in the tape player slot when not in use. Remove it completely to permit the slot door to close and to protect the mechanism from dust.
- Store cassette tapes away from extreme heat, magnetic fields, and direct sunlight. Protect the exposed cassette tape from dirt and damage. Store cassette tapes in their original cases or other protective cases.
- Insert only cassette tapes into the slot. If objects other than cassette tapes are inserted, they may damage the player.

▼Operating Tips for Mini Disc (MD) Player

- The MD player has been designed to play MDs bearing the identification logo as shown. No other MDs can be played.

- When inserting the MD, make sure the MD label is facing up, and the MD is oriented to the insertion slot in the direction of the arrow. If not inserted correctly, the MD will be ejected, or may remain stuck in the MD deck.

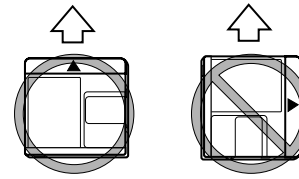

- Do not touch the internal part of the MD. If the MD shutter is slid open for no reason, it may be broken.

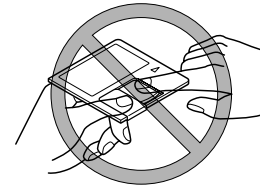

- Store MDs in their cases and away from direct sunlight.
- Do not insert fingers or foreign objects in the MD insertion slot as it could damage the MD deck.

▼Operating Tips for CD Player/In-Dash CD Changer

Condensation phenomenon

Immediately after turning on the heater when the vehicle is cold, the CD or optical components (prism and lens) in the CD player/changer may become clouded with condensation. At this time, the CD will eject immediately when placed in the unit. A clouded CD can be corrected simply by wiping it with a soft cloth. Clouded optical components will clear naturally in about an hour. Wait for normal operation to return before attempting to use the unit.

Handling the CD player/In-dash CD changer

The following precautions should be observed.

- Do not spill any liquid on the audio system.

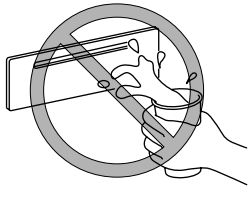

- Do not insert any objects, other than CDs, into the slot.

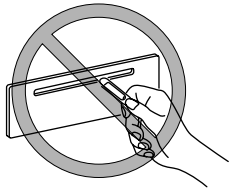

- The CD revolves at high speed within the unit. Defective (cracked or badly bent) CDs should never be used.

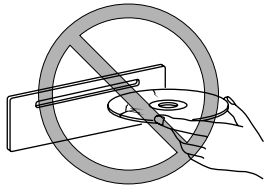

- Do not use non-conventional discs such as heart-shaped, octagonal discs, etc. The CD player/changer could be damaged.

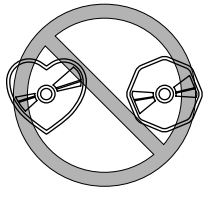

- A new CD may have rough edges on its inner and outer perimeters. If a disc with rough edges is used, proper setting will not be possible and the CD player/changer will not play the CD. Remove the rough edges in advance by using a ball-point pen or pencil as shown below. To remove the rough edges, rub the side of the pen or pencil against the inner and outer perimeter of the CD.

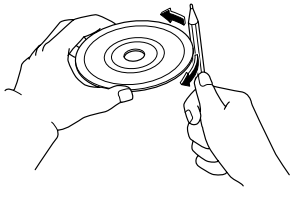

- When driving over uneven surfaces, the sound will jump.

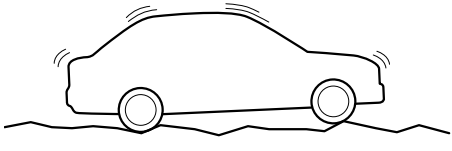

- The CD player/changer has been designed to play CDs bearing the identification logo as shown. No other discs can be played.

COMPACT disc DIGITAL AUDIO

- Be sure never to touch the signal surface when handling the CDs. Pick up a CD by grasping the outer edge or the edge of the hole and the outer edge.

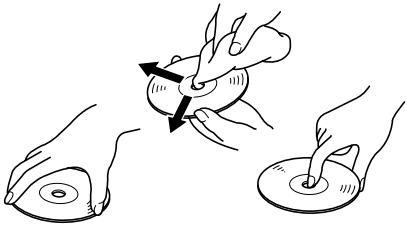

- Do not stick paper or tape on the CD. Avoid scratching the reverse side (the side without a label).
- Dust, finger smudges, and dirt can decrease the amount of light reflected from the signal surface, thus affecting sound quality. If the CD should become soiled, gently wipe it with a soft cloth from the center of the CD to the edge.
- Do not use record sprays, antistatic agents, or household spray cleaners. Volatile chemicals such as benzine and thinner can also damage the surface of the CD and must not be used. Anything that can damage, warp, or fog plastic should never be used to clean CDs.
- CDs, like traditional audio records, are made of plastic. To avoid warping, keep the CDs in their cases and do not store them where they will be exposed to direct sunlight.
- The CD player/changer ejects the CD if the CD is inserted upside down. Also dirty and/or defective CDs may be ejected.
- 8 cm (3 in) CDs and CD accessories (e.g. 8 cm disc adapter) cannot be used in the CD player/changer.

- Do not insert cleaning discs in the CD player/changer.
- Do not insert any disc with a peel-off or seal on it.

Audio Set

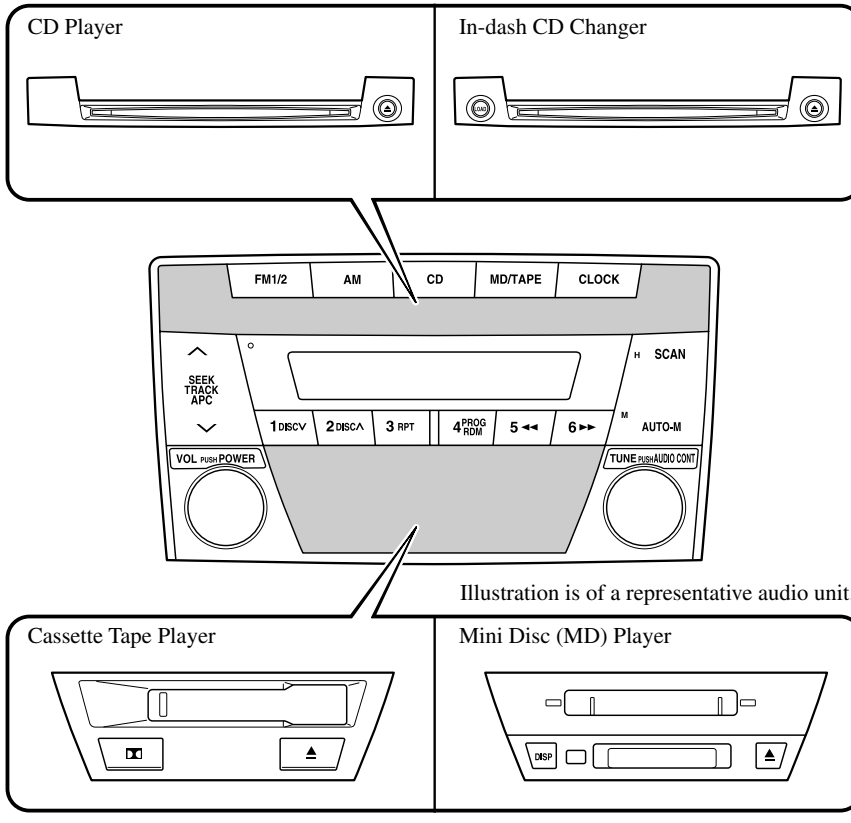

Power/Volume/Sound Controls 6-22
Clock 6-24
Operating the Radio 6-26
Operating the Cassette Tape Player 6-28
Operating the Mini Disc (MD) Player 6-30
Operating the Compact Disc (CD) Player 6-32
Operating the In-Dash CD Changer 6-34
Error Indications 6-37

▼ Power/Volume/Sound Controls

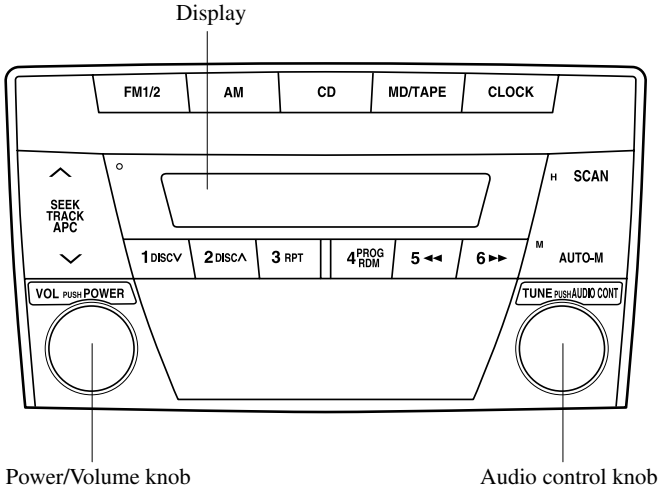

Power ON/OFF

Turn the ignition switch to the ACC or ON position.

Press the power/volume knob to turn the audio system on.
Press the power/volume knob again to turn the audio system off.

NOTE
To prevent the battery from being discharged, do not leave the audio system on for a long period when the engine is not running.

Volume adjustment

To adjust the volume, turn the power/volume knob.

Turn the power/volume knob to the right to increase volume, to the left to decrease it.

Audio sound adjustment

1. Press the audio control knob to select bass, mid-range, treble, fade or balance control. The selected function will be indicated.

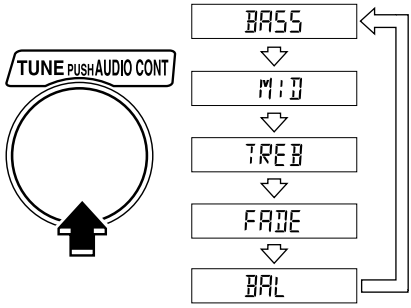

2. Turn the audio control knob to adjust the selected functions as follows:

Indication	Turn Left	Turn Right
BASS	Decrease bass	Increase bass
MID	Decrease mid-range	Increase mid-range
TREB	Decrease treble	Increase treble
FADE	Shift the sound to the front	Shift the sound to the rear
BAL	Shift the sound to the left	Shift the sound to the right

NOTE

About 5 seconds after selecting any mode, the volume function will be automatically selected. To reset bass, mid-range, treble, fade, and balance, press the audio control knob for 2 seconds. The unit will beep and "CL" will be displayed.

▼ Clock

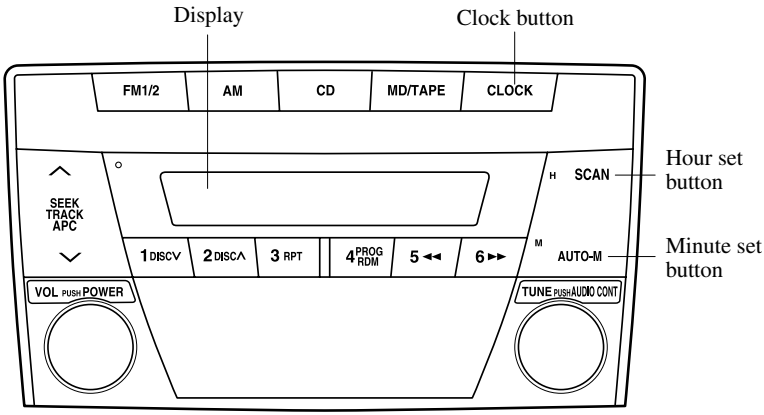

Setting the time

The clock can be set at any time when the ignition switch is in the ACC or ON position.

1. To adjust the time, press the clock button (CLOCK) for about 2 seconds until a beep is heard.
   The clock's current time will flash.
2. To advance the hours, press the hour set button (H). To advance the minutes, press the minute set button (M) while the time is flashing.
3. Press the clock button (CLOCK) again to start the clock.

Exact hour adjustment

1. To set the exact hour, press the clock button (CLOCK) for about 2 seconds until a beep is heard.
   The clock's current time will flash.
2. Press the clock button (CLOCK) again and the time will be adjusted as follows:
   (Example)
   12:01—12:29→12:00
   12:30—12:59→1:00

NOTE
If the power supply to the unit is interrupted (if the fuse blows or the vehicle's battery is disconnected), the clock will need to be reset.

Changing the display mode

The display on the unit can be changed by pressing the clock button (CLOCK). This alternates the display between time and audio. When the clock mode has been selected, the time will be displayed.

NOTE
If audio operation is selected while the time mode is on, the selected audio mode will be displayed for 10 seconds, then the display will revert to the time mode.

▼Operating the Radio

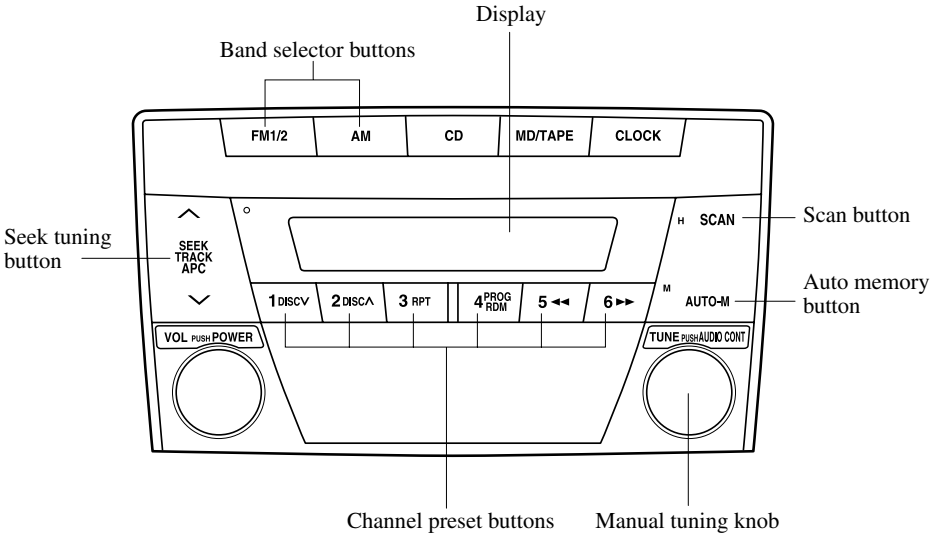

Radio ON

Press a band selector button (AM or FM1/2) to turn the radio on.

Band selection

Choose AM by pressing the AM button (AM) and FM by pressing the FM1/2 button (FM1/2).

The selected mode will be indicated. If FM stereo is being received, "ST" will be displayed.

NOTE
If the FM broadcast signal becomes weak, reception automatically changes from STEREO to MONO for reduced noise, and the "ST" indicator will go out.

Tuning

The radio has the following tuning methods: Manual, Seek, Scan, Preset channel, and Auto memory tuning. The easiest way to tune stations is to set them on preset channels.

NOTE
If the power supply is interrupted (fuse blows or the battery is disconnected), the preset channels will be canceled.

Manual tuning

Turning the manual tuning knob will change the frequency higher or lower.

Seek tuning

Pressing the seek tuning button (∧, ∨) will cause the tuner to seek a higher or lower frequency automatically.

NOTE
If you continue to press and hold the button, the frequency will continue changing without stopping.

Scan tuning

Press the scan button (SCAN) to automatically sample strong stations. Scanning stops at each station for about 5 seconds. To hold a station, merely press the scan button (SCAN) again during this interval.

Preset channel tuning

The 6 preset channels can be used to store 6 AM and 12 FM stations.

1. To set a channel first select AM, FM1, or FM2. Tune to the station you want.
2. Depress a channel preset button for about 2 seconds until a beep is heard. The preset channel number and station frequency will be displayed. The station is now held in the memory.
3. Repeat this operation for the other stations and bands you want to store. To tune one in the memory, select AM, FM1, or FM2 and then press its channel preset button. The station frequency and the channel number will be displayed.

NOTE
If the power supply is interrupted (fuse blows or the battery is disconnected), the preset channels will be canceled.

Auto memory tuning

This is especially useful when driving in an area where the local stations are not known. Additional AM/FM stations can be stored without disturbing the previously set channels.

Press and hold the auto memory button (AUTO-M) for about 2 seconds until a beep is heard; the system will automatically scan and temporarily store up to 6 stations with the strongest frequencies in each selected band in that area.

After scanning is completed, the station with the strongest frequency will be tuned and its frequency displayed.
Press and release the auto memory button (AUTO-M) to recall stations from the auto-stored stations. One stored station will be selected each time; its frequency and channel number will be displayed.

NOTE
If no stations can be tuned after scanning operations, "A" will be displayed.

▼Operating the Cassette Tape Player

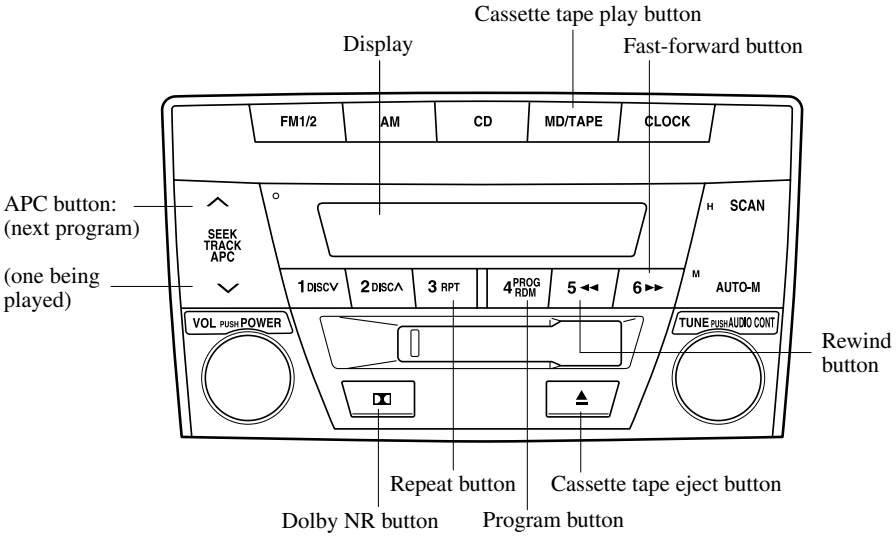

Cassette tape insert

Insert the cassette tape into the slot, open edge to the right and cassette tape will begin play and "TAPE" will be displayed. At the end of the cassette tape, the unit automatically reverses cassette tape play. When ▲ is lit, the cassette tape's top side is playing. When ▼ is lit, the bottom side is on.

NOTE
When a metal tape is inserted, the player will automatically compensate for it and "MTL" will be displayed.

Playing

Press the cassette tape play button (MD/TAPE) to start playing when a cassette tape is in the unit. If there isn't a cassette tape in the unit when the cassette tape play button (MD/TAPE) is pressed, "NO TAPE" will flash on and off in sequence.

Dolby noise reduction

When using a tape with Dolby NR*, push the Dolby NR button (DD). The DD symbol will be displayed. To play a tape without Dolby NR, push the button once again.

* Noise reduction system manufactured under license from Dolby Laboratories Licensing Corporation.
Dolby and the double-D symbol DD are trademarks of Dolby Laboratories Licensing Corporation.

Ejecting the cassette tape

Press the cassette tape eject button (⏏) to eject the cassette tape.

NOTE
The cassette tape can be ejected when the ignition switch is in the OFF position.

Fast-forward/Rewind

Press the fast-forward button (►►) to fast-forward.
Press the rewind button (◄◄) to rewind.
To stop this operation and play the cassette tape, press the button again.

NOTE
When the cassette tape ends during fast forward or rewind, it automatically stops and starts playing.

Reversing

Press the program button (PROG) to change cassette tape-playing direction.

NOTE
When the cassette tape ends, the unit automatically reverses play.

Automatic program control (APC)

APC is used to find the beginning of either the next program or the one being played.

Press the APC button (∧) to the beginning of the next selection.
Press the APC button (∨) to the beginning of the one being played. To stop this operation and play the cassette tape, press the button again.

If APC detects 15 seconds of blank space it will automatically advance the tape to the next selection.

NOTE
APC may not operate properly if • A tape was recorded at a low level. • A tape has long, silent intervals. • A tape is a live recording. • A tape has very short intervals of less than 3 seconds.

Repeat play

This operation makes it possible to listen to a selection repeatedly.

Press the repeat button (RPT) during play.
The current selection playing will be repeated ("RPT" will be displayed).
Press the repeat button (RPT) once again to cancel repeat play.

NOTE
RPT may not operate properly if • A tape was recorded at a low level. • A tape has long, silent intervals. • A tape is a live recording. • A tape has very short intervals of less than 3 seconds.

▼Operating the Mini Disc (MD) Player

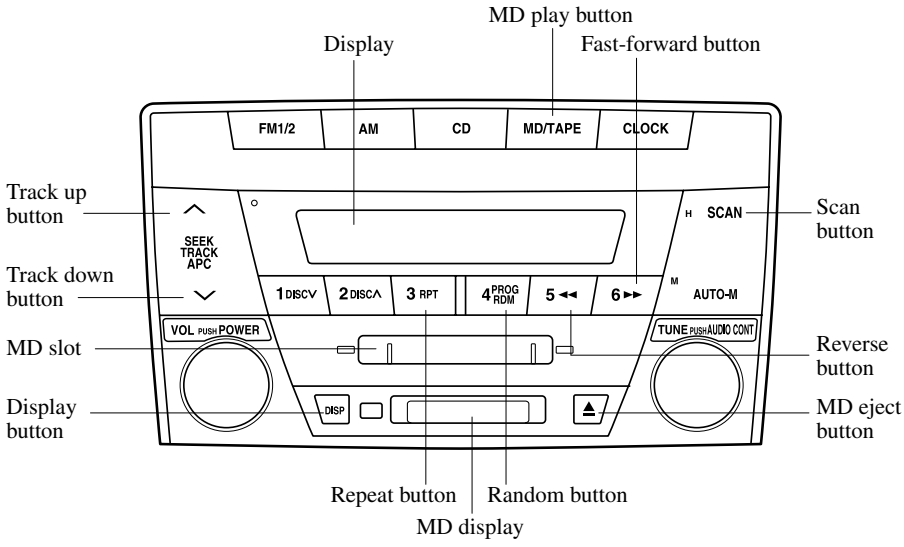

Inserting the MD

Insert the MD, label-side up with the arrow pointed to the slot. The auto-loading mechanism will set the MD and begin play. There will be a short lapse before play begins while the player reads the digital signals on the MD.

Playing

Press the MD play button (MD/TAPE) to start playing when a MD is in the unit.

Ejecting the MD

Press the MD eject button (⏏) to eject the MD.

Fast-forward/Reverse

Press and hold the fast-forward button (►►) to advance through a track at high speed.
Press and hold the reverse button (◄◄) to reverse through a track at high speed.

Track search

Press the track up button (∧) once to skip forward to the beginning of the next track.
Press the track down button (∨) once to skip back to the beginning of the current track.

Music scan

This feature helps to find a program by playing about the first 10 seconds of each track.

Press the scan button (SCAN) during play to start scan play operation (the track number will flash).
Press the scan button (SCAN) once again to cancel scan play.

NOTE
If the unit is left in scan, normal play will resume where scan was selected.

Repeat play

This feature makes it possible to listen to a selection repeatedly.

Press the repeat button (RPT) during play. The current selection will be repeated ("RPT" will be displayed).
Press the repeat button (RPT) once again to cancel repeat play.

Random play

This feature allows the MD player to randomly select the order of the songs.

Press the random button (RDM) during play. The next selection will be randomly selected ("RDM" will be displayed).
Press the random button (RDM) once again to cancel random play.

Changing the MD display

To change the MD display during MD play, press and hold the display button (DISP) for about half a second to advance through each of the following displays:

Song title → Disc title → No display

NOTE
If there is no song or disc title recorded on the MD, "NO TITLE" will be displayed.

Long disc or song titles

When disc or song titles exceed 10 letters or numerals, press the display button (DISP) to display the remaining part of the title.

▼Operating the Compact Disc (CD) Player

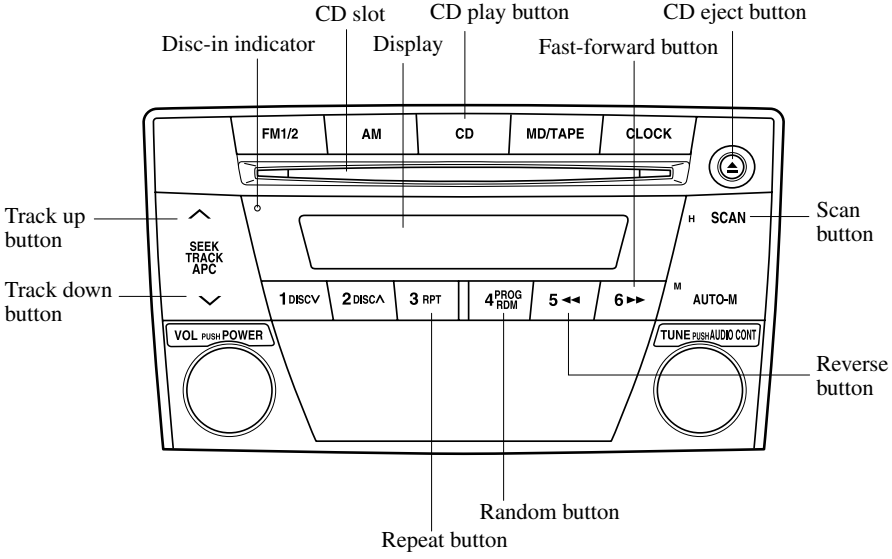

Inserting the CD

Insert the CD into the slot, label-side up. The auto-loading mechanism will set the CD and begin play. There will be a short lapse before play begins while the player reads the digital signals on the CD.
The disc-in indicator will illuminate and the track number will be displayed.

Playing

Press the CD play button (CD) to start playing when a CD is in the unit.

Ejecting the CD

Press the CD eject button (⏏) to eject the CD.

Fast-forward/Reverse

Press and hold the fast-forward button (►►) to advance through a track at high speed.
Press and hold the reverse button (◄◄) to reverse through a track at high speed.

Track search

Press the track up button (∧) once to skip forward to the beginning of the next track.
Press the track down button (∨) once to skip back to the beginning of the current track.

Music scan

This feature helps to find a program by playing about the first 10 seconds of each track.

Press the scan button (SCAN) during play to start scan play operation (the track number will flash).
Press the scan button (SCAN) once again to cancel scan play.

NOTE
If the unit is left in scan, normal play will resume where scan was selected.

Repeat play

This feature makes it possible to listen to a selection repeatedly.

Press the repeat button (RPT) during play. The current selection will be repeated ("RPT" will be displayed).
Press the repeat button (RPT) once again to cancel repeat play.

Random play

This feature allows the CD player to randomly select the order of the songs.

Press the random button (RDM) during play. The next selection will be randomly selected ("RDM" will be displayed).
Press the random button (RDM) once again to cancel random play.

▼Operating the In-Dash CD Changer

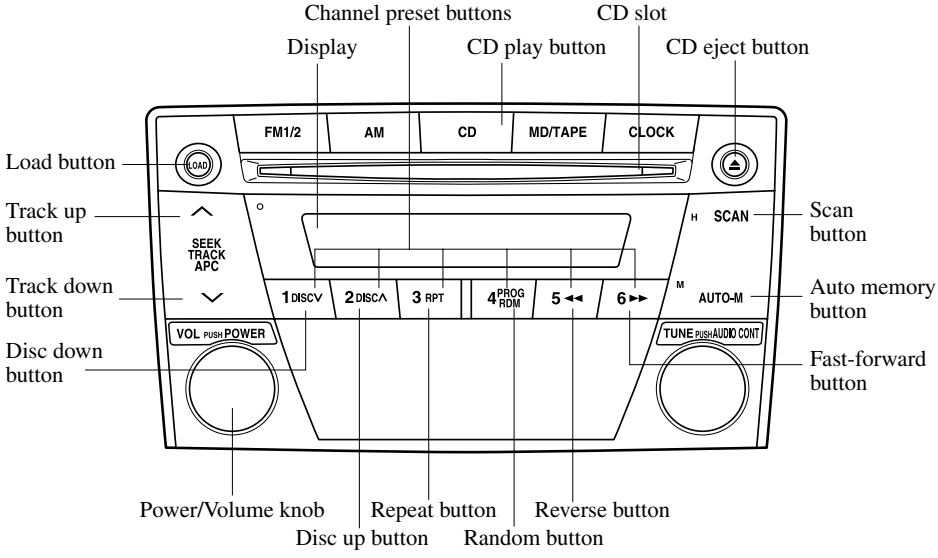

Inserting the CD

The CD must be label-side up when inserting. The auto-loading mechanism will set the CD and begin play. There will be a short lapse before play begins while the player reads the digital signals on the CD.
The disc number and the track number will be displayed.

NOTE
A CD cannot be inserted while the display reads "WAIT". A beeping sound can be heard during this waiting time. Simultaneously pressing the power/volume knob and the load button (LOAD) for about 2 seconds will turn this beeping sound ON or OFF.

Normal insertion

1. Press the load button (LOAD).
2. When "In" is displayed, insert the CD.

Inserting CDs into desired tray number

1. Press and hold the load button (LOAD) for about 2 seconds until a beep is heard.
2. Press the channel preset button for the desired tray number within 5 seconds after the beep is heard.
3. When "In" is displayed, insert the CD.

NOTE
The CD cannot be inserted to the desired tray number if the number is already occupied.

Multiple insertion

1. Press and hold the load button (LOAD) for about 2 seconds until a beep is heard.
2. When "In" is displayed, insert the CD.
3. When "In" is displayed again, insert the next CD.

NOTE

The first-inserted CD will be played automatically when:

- No CD is inserted within 15 seconds after "In" is displayed.
- The CD trays are full.

Ejecting the CD

Normal ejection

1. Press the CD eject button (⏏). The disc number and "OUT" will be displayed.
2. Pull out the CD.

NOTE

When the CD is ejected during play, the next CD will be played automatically.

Ejecting CDs from desired tray number

1. Press and hold the CD eject button (⏏) for about 2 seconds until a beep is heard.
2. Press the channel preset button for the desired CD number within 5 seconds after the beep is heard.
3. Pull out the CD.

Multiple ejection

1. Press and hold the CD eject button (⏏) for about 2 seconds until a beep is heard.
2. Wait 5 seconds or press the CD eject button (⏏) again within 5 seconds after the beep is heard.
3. Pull out the CD, then the next CD will be ejected.

NOTE

- CDs will be ejected starting with the one with the lowest number.
- All CDs in the tray will be ejected continuously.
- CDs can be ejected when the ignition switch is off. Press and hold the CD eject button (⏏) for about 2 seconds and all CDs will eject.

Playing

Press the CD play button (CD) to start playing when a CD is in the unit.

Fast-forward/Reverse

Press and hold the fast-forward button (▶▶) to advance through a track at high speed.
Press and hold the reverse button (◀◀) to reverse through a track at high speed.

Track search

Press the track up button (∧) once to skip forward to the beginning of the next track.
Press the track down button (∨) once to skip back to the beginning of the current track.

Disc search

Press the disc up button (DISC∧) to skip forward to the beginning of the next CD.
Press the disc down button (DISC∨) to skip back to the beginning of the previous CD.

Music scan

This feature helps to find a program by playing about the first 10 seconds of each track.

Press the scan button (SCAN) during play to start scan play operation (the track number will flash).
Press the scan button (SCAN) once again to cancel scan play.

NOTE
If the unit is left in scan, normal play will resume where scan was selected.

Repeat play

This feature makes it possible to listen to a selection repeatedly.

Press the repeat button (RPT) during play. The current selection will be repeated ("RPT" will be displayed).
Press the repeat button (RPT) once again to cancel repeat play.

Random play

This feature allows the CD player to randomly select the order of the songs.

Press the random button (RDM) during play. The next selection will be randomly selected ("RDM" will be displayed).
Press the random button (RDM) once again to cancel random play.

▼Error Indications

If you see an error indication on the display, find the cause in the chart. If you cannot clear the error indication, take the vehicle to an Authorized Mazda Dealer.

Indication	Cause	Solution
CHECK MD	MD is inserted upside down	Insert the MD properly. If the error indication does not disappear, consult an Authorized Mazda Dealer
CHECK MD	MD is defective	Insert another MD properly. If the error indication does not disappear, consult an Authorized Mazda Dealer
CHECK CD	CD is inserted upside down	Insert the CD properly. If the error indication does not disappear, consult an Authorized Mazda Dealer
CHECK CD	CD is defective	Check the CD for scratches or soiling

Audio Control Switch Operation

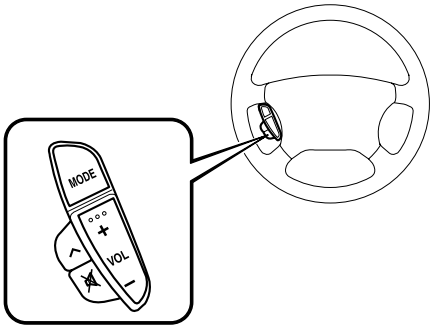

NOTE
Mazda installed this system to help you avoid being too distracted using audio controls on the dashboard. Always make safe driving your first priority.

▼Adjusting the Volume

To increase the volume, press volume button (+).

To decrease the volume, press volume button (−).

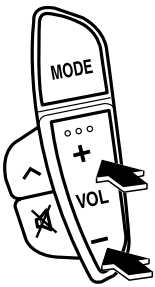

▼Changing the Source

Press the mode switch (MODE) to change the audio source (AM radio>FM1 radio>FM2 radio>Cassette tape player or MD player>CD player or CD changer>cyclical).

▼Seek Switch

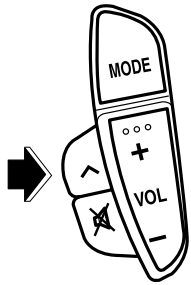

When listening to the radio

Press the seek switch (^) to seek a higher frequency automatically.

When playing a cassette tape

Press the seek switch (^), release, and it will advance to the next selection.

When playing a CD or MD

Press the seek switch (^) to skip to the next track.

▼Mute Switch

Press the mute switch ( ) once to mute audio, press it again to resume audio output.

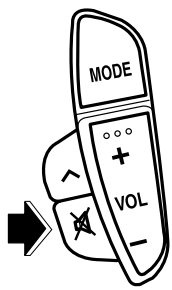

Safety Certification

This CD player is made and tested to meet exacting safety standards. It meets FCC requirements and complies with safety performance standards of the U.S. Department of Health and Human Services.

⚠CAUTION

- This CD player should not be adjusted or repaired by anyone except qualified service personnel.
  If servicing is required, contact an Authorized Mazda Dealer.
- Use of controls or adjustments or performance of procedures other than those specified herein may result in hazardous laser exposure. Never operate the CD player with the top case of the unit removed.
- Changes or modifications not expressly approved by Mazda may void the user's authority to operate this equipment.

NOTE

For CD player section:
This device complies with part 15 of the FCC Rules. Operation is subject to the following two conditions: (1)This device may not cause harmful interference, and (2) this device must accept any interference received, including interference that may cause undesired operation.

NOTE

This equipment has been tested and found to comply with the limits for a Class B digital device, pursuant to part 15 of the FCC Rules. These limits are designed to provide reasonable protection against harmful interference in a residential installation. This equipment generates, uses, and can radiate radio frequency energy and, if not installed and used in accordance with the instructions, may cause harmful interference to radio communications. However, there is no guarantee that interference will not occur in a particular installation.

Sunvisors

When you need a sunvisor, lower it for use in front or swing it to the side.

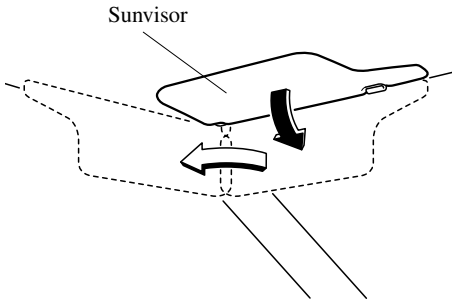

▼Vanity Mirrors

To use the vanity mirror, lower the sunvisor.
If your vehicle is equipped with a vanity mirror light, it will illuminate when you pull the cover up.

Interior Lights

▼Illuminated Entry System

When the switch is in the DOOR position, the overhead light, the luggage compartment light and the courtesy lights come on for:

- about 30 seconds after the driver's door is unlocked and the ignition key is removed.
- about 15 seconds after all doors are closed.
- about 15 seconds after the key is removed from the ignition.

The light also goes out when:

- the ignition switch is turned to the ON position and all doors are closed.
- the driver's door is locked.

NOTE
If any door is left opened, the light goes out after about 5 minutes. The light turns on again when the ignition switch is turned to the ON position, or when any door is opened after all doors have been closed.

▼Overhead Lights

Front

Without sunroof
(with overhead console)

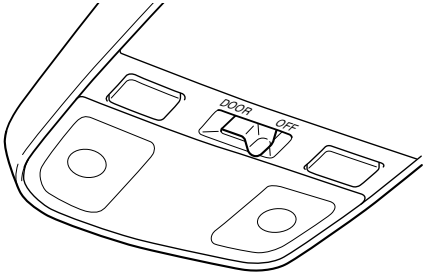

Without sunroof
(without overhead console)

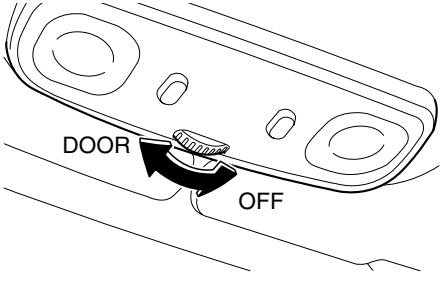

With sunroof

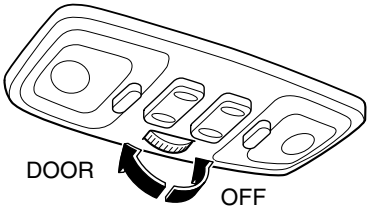

OFF	Light off
DOOR	• Light on when any door or the liftgate is open • Light on or off when the illuminated entry system is on

Rear

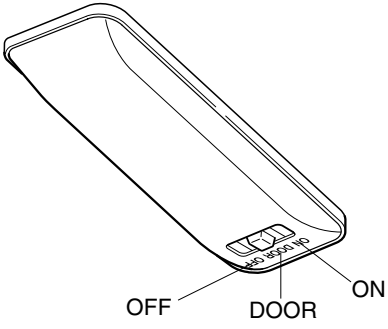

OFF	Light off
DOOR	• Light on when any door or the liftgate is open • Light on or off when the illuminated entry system is on
ON	Light on

▼Map Lights

The map lights are switched on or off by pressing the switches.

Without sunroof (with overhead console)

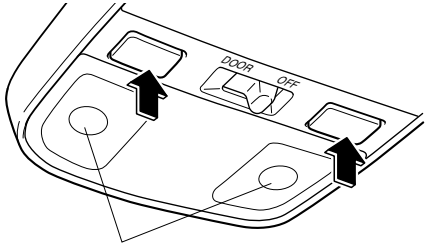

Without sunroof (without overhead console)

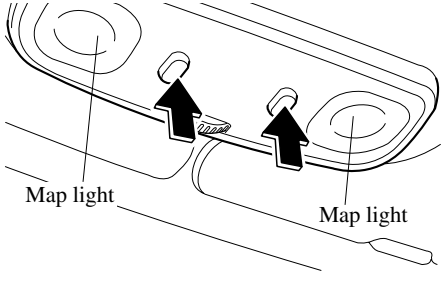

With sunroof

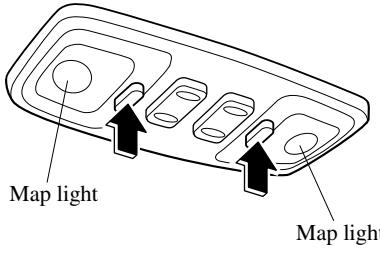

▼Luggage Compartment Light

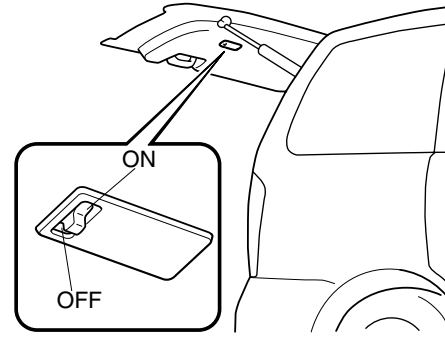

OFF	Light off
ON	• Light on when any door or the liftgate is open • Light on or off when the illuminated entry system is on

▼Courtesy Lights

Turns on when any door is open or the illuminated entry system is on.

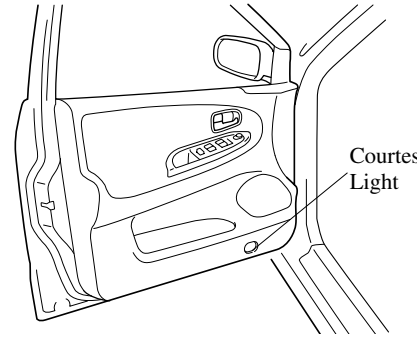

Lighter

The ignition switch must be in the ACC or ON position.
Press the lighter in and release it. When ready for use, it automatically pops out.

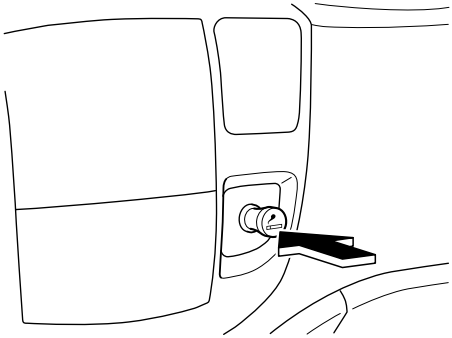

⚠CAUTION

- Don't touch the metal part of the lighter, you may burn yourself.
- Don't hold the lighter in because it will overheat.
- Don't use the lighter socket for plug-in accessories such as shavers and coffee pots. They may damage it or cause electrical failure. Use only a genuine Mazda lighter or the equivalent.
- If the lighter doesn't pop out within 30 seconds, remove it to prevent overheating.

Ashtray

⚠CAUTION

Don't use the ashtray for trash. You might start a fire.

▼Front

To open, pull the tray out and open the cover.

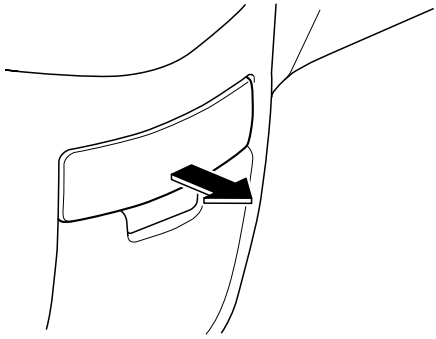

To remove, open and pull up the ashtray.

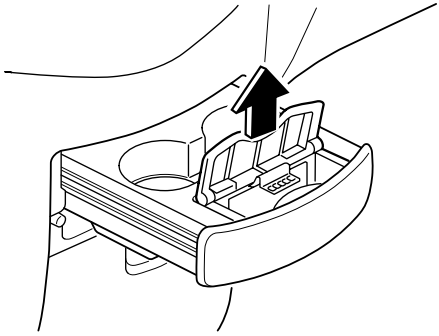

▼Rear

⚠CAUTION

Using an ashtray removed from its fixed position or not completely inserted is dangerous. Cigarettes could roll around or spill out of the ashtray into the vehicle and start a fire. Moreover, cigarette stubs will not extinguish themselves completely even if the ashtray lid is closed. Only use a rear ashtray in its fixed position, and make sure it is completely inserted.

Type A

To remove, open the cover and pull the ashtray upward.

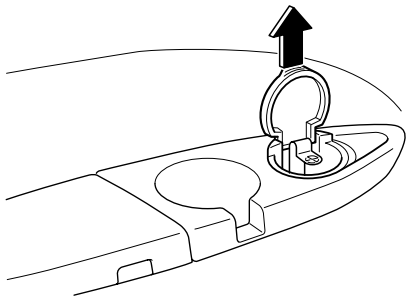

Type B

To remove, open and push down on the lock spring.

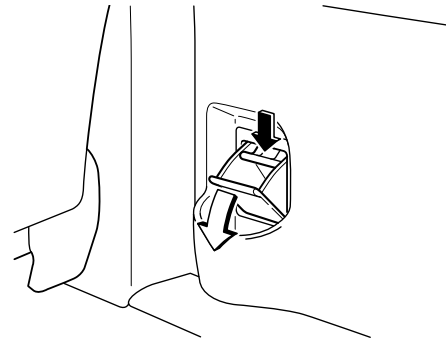

Cup Holder

⚠ WARNING

Using Cup Holder:
Using a cup holder to hold hot liquids while the vehicle is moving is dangerous. If the contents spill, you could be scalded. Never use a cup holder to hold hot liquids while the vehicle is moving.

Don't Put Anything Other Than Cups or Drink-cans in Cup Holder:
Putting objects other than cups or drink-cans in a cup holder is dangerous.
During sudden braking or maneuvering, occupants could be hit and injured, or objects could be thrown around the vehicle, causing interference with the driver and the possibility of an accident. Only use a cup holder for cups or drink-cans.

⚠ CAUTION

To reduce the possibility of injury in an accident or a sudden stop, keep cup holders closed when not in use.

▼Front

To use, pull the tray out.

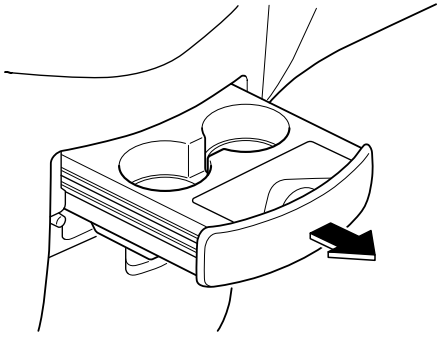

▼Rear

Second seat (Passenger seat only)

The rear cup holder is on the right of the second-row seat. To use the cup holder, pull it out.

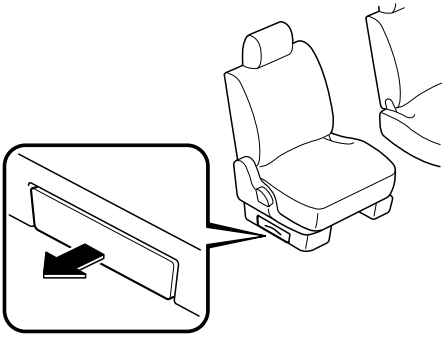

Seat side table

To use the cup holder

1. Raise the table (page 2-8).
2. Pull the cup holder end to extend it rearwards.

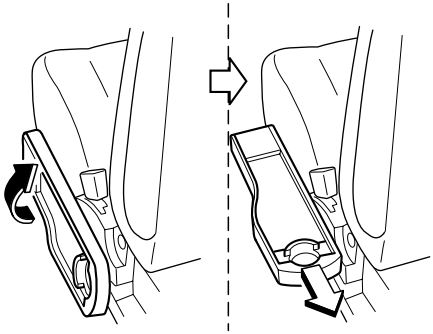

To collapse the table

1. Push the cup holder back into the table.
2. Pull the lever under the table, then lower it (page 2-8). After the table is collapsed, press the table surface to lock it in place.

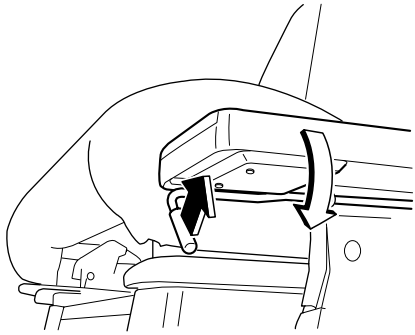

Third seat

If an ashtray is equipped, pull it out and use the hole for an additional cup holder.

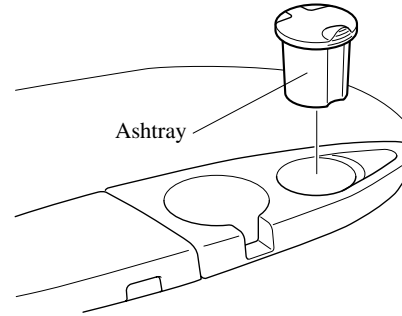

Bottle Holder

Bottle holders are on the inside of the sliding doors.

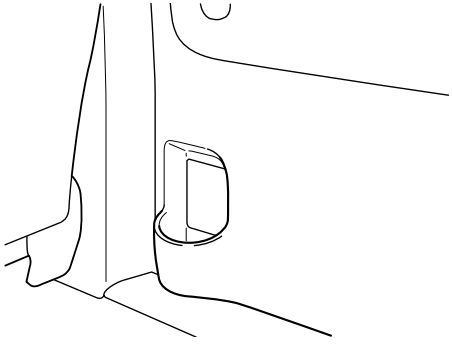

⚠ CAUTION

Don't use the bottle holders for containers without caps. The contents may spill when a sliding door is opened.

Storage Compartments

⚠ *WARNING*

Open Storage Boxes:
Driving with the storage boxes open is dangerous. To reduce the possibility of injury in an accident or a sudden stop, keep the storage boxes closed when driving.

⚠ CAUTION

In hot weather, don't leave combustible materials or objects which will deform in extreme heat such as lighters and glasses in the vehicle.

▼ Overhead Console

This console box is designed to store a garage door opener or other accessories. Push and release to open.

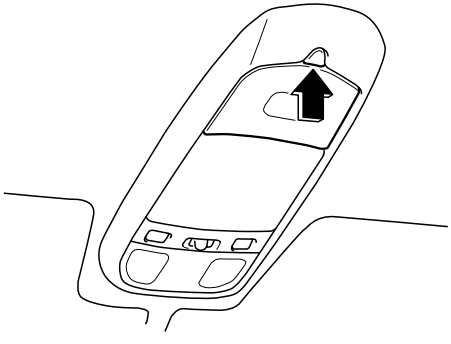

To store the garage door opener:

1. Open the console box.

2. Take out the two pieces of urethane spacer.
3. Open the cap by pushing it from inside the box.

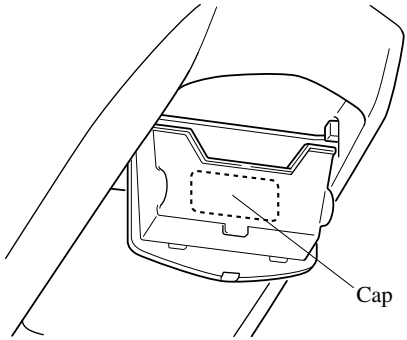

4. Store the garage door opener by adjusting the thickness with the urethane spacers.

▼Eyeglass Holder

Push the lid to open.

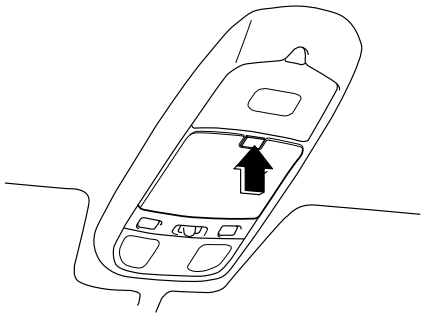

▼Glove Box

To open the glove box, pull the latch toward you.
Insert the key and turn it clockwise to lock, counterclockwise to unlock.

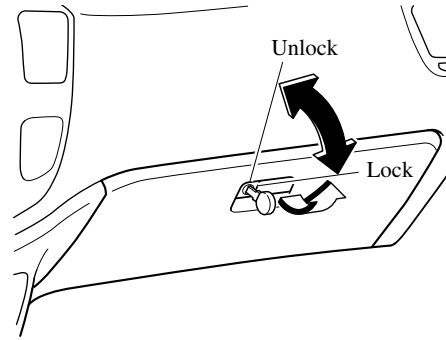

▼Front Console

Pull the latch to open.

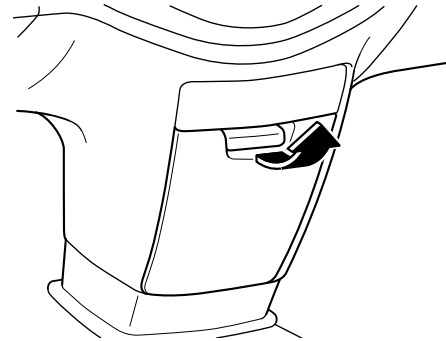

▼Under Seat Tray (Front Passenger Seat Only)

Lift the latch and pull the tray forward.

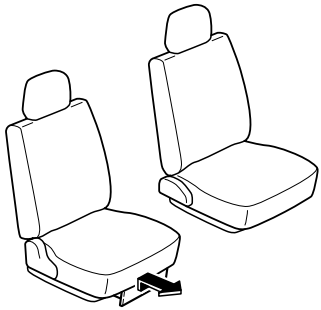

▼Storage Box (In Seat Side Table)

To use the storage box

1. Raise the table (page 2-8).
2. Push the button to open.

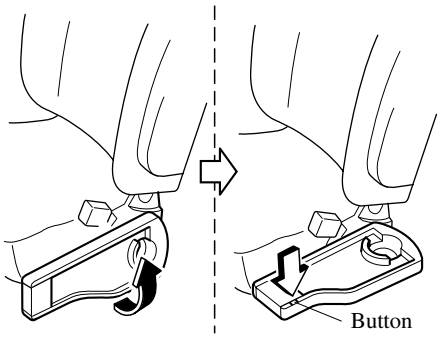

To collapse the table

1. Close the lid on the storage box.
2. Pull the lever under the table, then lower it (page 2-8). After the table is collapsed, press the table surface to lock it in place.

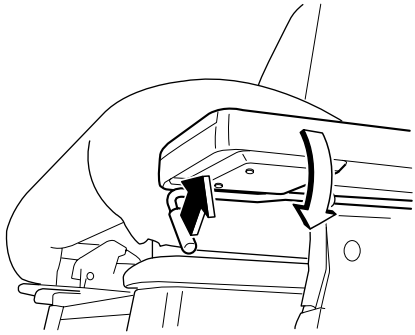

▼Rear Console

Push the knob and open the cover.

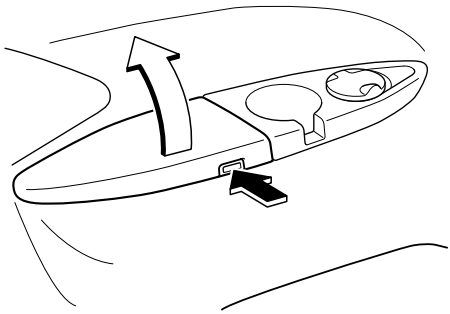

▼Cargo Securing Loops

⚠ *WARNING*

Not Securing Cargo:
Not securing cargo while driving is dangerous. The cargo could move or be crushed in sudden braking or a collision and cause injury. Make sure the luggage is secured before driving.

Use the loops in the luggage compartment to secure cargo with a rope or net. The tensile strength of the loops is 196N (20 kgf, 44 lbf). Do not apply excessive force to the loops as it will damage them.

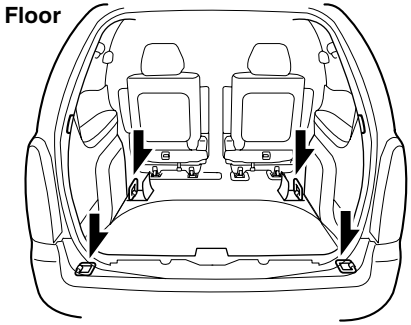

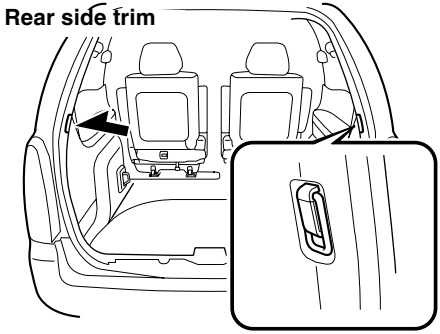

▼Shopping Bag Hooks

The shopping bag hooks can be used for hanging shopping bags.

⚠ CAUTION

Do not hang excessive weight on the shopping bag hooks as they could be damaged.

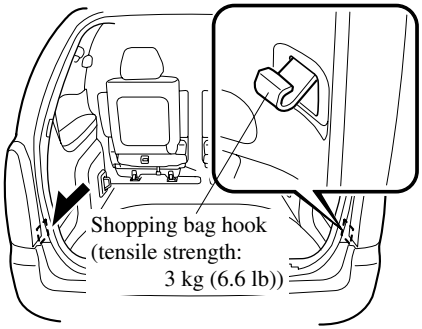

Accessory Sockets

The ignition switch must be in the ACC or ON position.
Only use genuine Mazda accessories or the equivalent requiring no greater than 12V—10A.

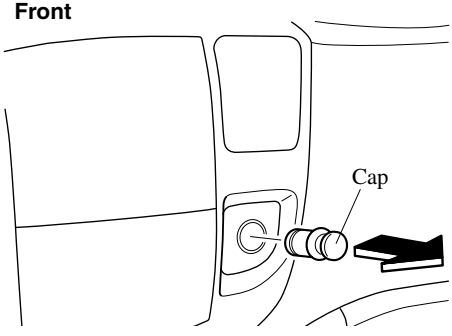

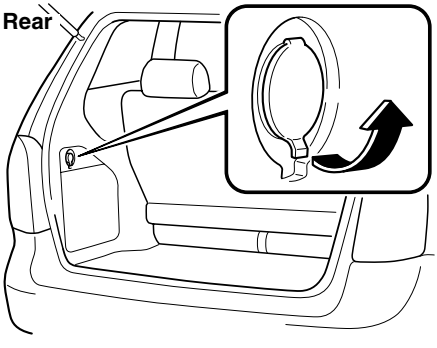

⚠ CAUTION

To prevent accessory socket damage or electrical failure, pay attention to the following;

- Don't use accessories that require more than 12V—10A.
- Don't use accessories that are not genuine Mazda accessories or the equivalent.
- Close the cover when the accessory socket is not in use.
- Correctly insert the plug into the accessory socket.

NOTE

To prevent discharging the battery, don't use the socket for long periods with the engine off or idling.

7 In Case of an Emergency

Helpful information on what to do in an emergency.

Parking in an Emergency 7- 2
Parking in an Emergency 7- 2

Flat Tire 7- 3
Spare Tire and Tool Storage 7- 3
Changing a Flat Tire 7- 8

Overheating 7-15
Overheating 7-15

Emergency Starting 7-17
Starting a Flooded Engine 7-17
Jump-Starting 7-17
Push-Starting 7-19

Emergency Towing 7-20
Towing Description 7-20
Tiedown Hooks 7-21
Recreational Towing 7-21

Parking in an Emergency

The hazard warning lights should always be used when you stop on or near a roadway.

The hazard warning lights warn other drivers that your vehicle is a traffic hazard and that they must take extreme caution when near it.

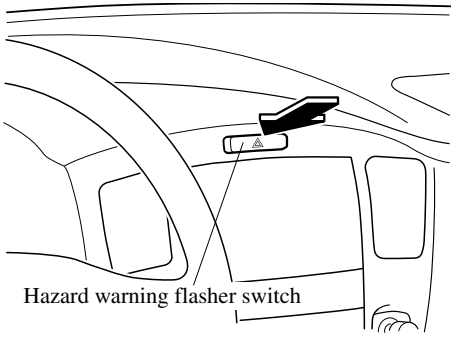

Depress the hazard warning switch and all four turn signals will flash at once.

NOTE

- The turn signals don't work when the hazard warning lights are on.
- Check local regulations about the use of hazard warning lights while the vehicle is being towed. They may forbid it.

Spare Tire and Tool Storage

Spare tire and tools are stored in the locations illustrated in the diagram.

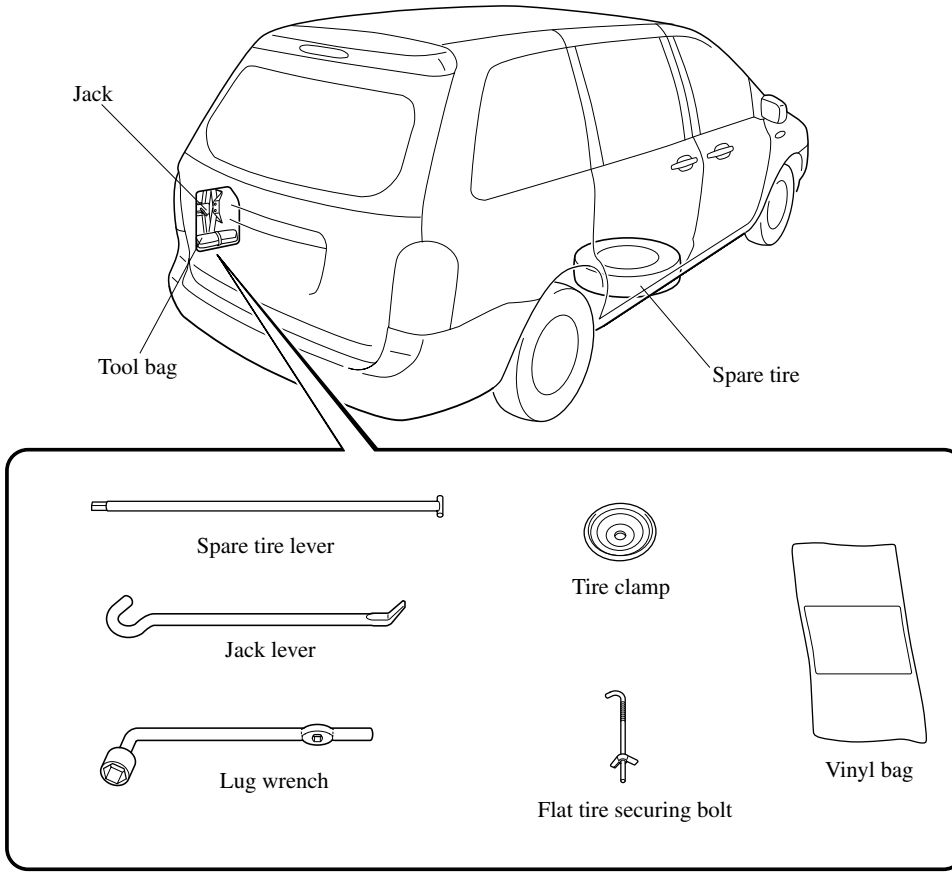

▼Jack

To remove the jack

1. Remove the cover.

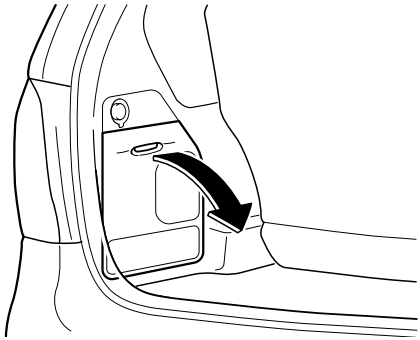

2. Remove the tool bag.

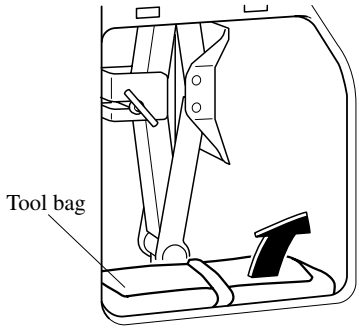

3. Turn the wing bolt counterclockwise.

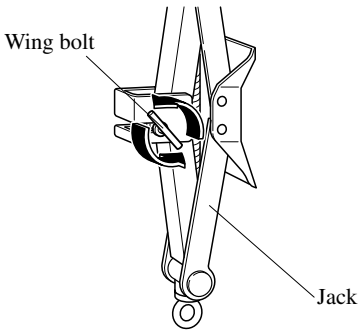

To secure the jack

Perform the removal procedure in reverse.

▼Spare Tire

Your Mazda has a temporary spare tire. The temporary spare tire is lighter and smaller than a conventional tire, and is designed only for emergency use and should be used only for VERY short periods. Temporary spares should NEVER be used for long drives or extended periods.

⚠ *WARNING*

Driving with a Temporary Spare Tire on Ice or Snow:
Driving with a spare tire on the front (driving) wheels on ice or snow is dangerous. Handling will be affected. You could lose control of the vehicle and have an accident. Put the spare tire on the rear axle and move a regular tire to the front.

⚠CAUTION

To avoid damage to the temporary spare or to the vehicle, observe the following precautions:

- Don't exceed 80 km/h (50 mph).
- Avoid driving over obstacles. Also, don't drive through an automatic car wash. This tire's diameter is smaller than a conventional tire's, so the ground clearance is reduced about 25 mm (1 in).
- Don't use a tire chain on this tire because it won't fit properly.
- Don't use your temporary spare on any other vehicle; it has been designed only for your Mazda.
- Do not tow a trailer while using this tire.
- Use only one temporary spare tire on your vehicle at the same time.

To remove the spare tire

1. Have everyone get out of the vehicle and away from the vehicle and traffic.
2. For side-spoiler equipped vehicles, remove the fasteners on both sides of the spoiler cap by turning them counterclockwise.
   Pull the spoiler cap out and to the left.

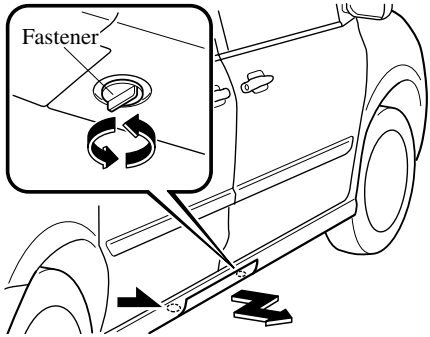

NOTE

- Install the side spoiler cap in reverse order of removal.
- After installing the side spoiler cap, make sure it is securely attached.

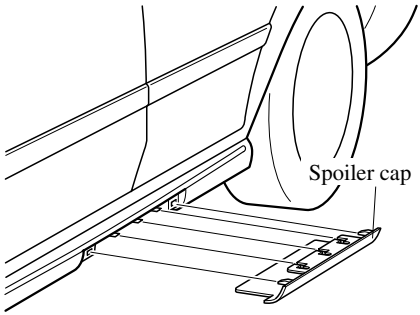

3. Locate the spare tire carrier socket cap on the right, in front of the second-row seat. Unscrew it by turning it counterclockwise.

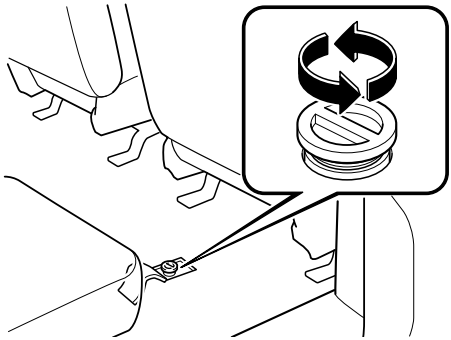

4. Remove the spare tire lever and lug wrench from the tool bag.
5. Raise the reclining lever and lower the seatback forward.
   Make sure the seatback is locked.
6. Insert the spare tire lever into the spare tire carrier socket. Fit the lug wrench to the opposite end of the spare tire lever.

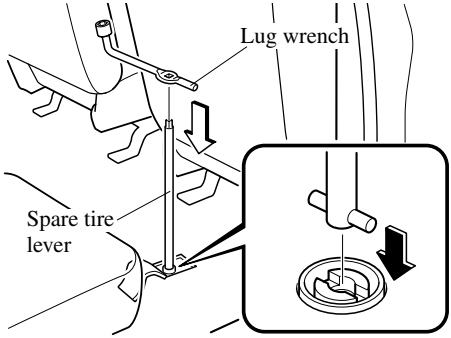

7. Slowly turn the lug wrench counterclockwise until the spare tire reaches the ground and the cable becomes loose.

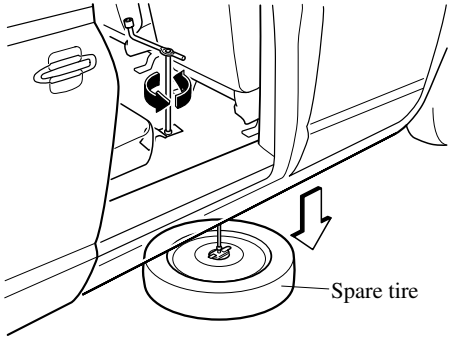

⚠ CAUTION

- Turning the lug wrench without reclining the seat could damage the seatback.
- Applying excessive lateral force while the spare tire lever is attached may result in damage to the socket.

NOTE

The spare tire lever remains locked in the socket while the spare tire is being lowered.
Unless the cable is rolled up completely, the spare tire lever cannot be removed from the socket.

8. Rotate the small lever on top of the retaining plate and pull the retaining plate out from the center hole of the tire.

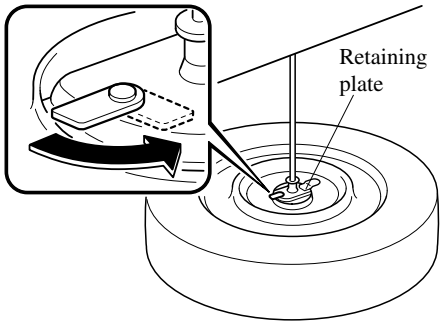

To secure the spare tire

1. Place the tire with the outer side facing upward, rotate the small lever on top of the retaining plate and slide the retaining plate through the center hole of the tire.
   Rotate the small lever into place.

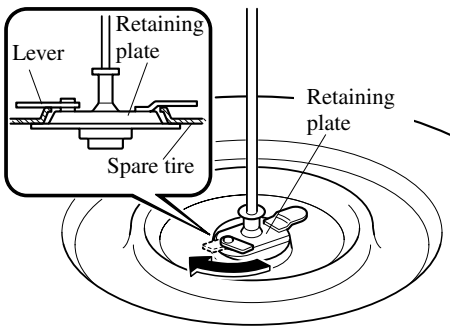

2. Raise the spare tire slowly in reverse order of removal.

⚠CAUTION

- Applying excessive lateral force while the spare tire lever is attached may result in damage to the socket.
- Place the specialized temporary spare tire in the spare tire carrier correctly.
  Placing the specialized temporary spare tire wrong side up or using any tire other than the small temporary spare tire designed for use with this vehicle will result in poor attachment and insufficient ground clearance in the spare tire carrier and the danger of the tire falling off.

NOTE

Unless the cable is rolled up completely, the spare tire lever cannot be removed from the socket.

3. Replace the spare tire carrier cap in the socket and turn it until the spare tire is pulled up tight.

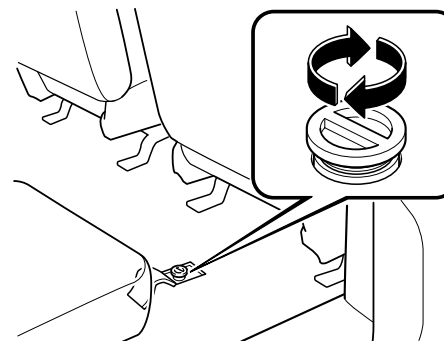

⚠CAUTION

- If you hear rattling from the spare tire carrier while the vehicle is moving, the spare tire carrier cable may be cut.
  Have it repaired at an Authorized Mazda Dealer as soon as possible.
- When the spare tire carrier socket cap is screwed completely tight, the spare tire is locked in the highest position.
  If the spare tire carrier socket cap is not screwed completely tight and the cable is by chance cut, the spare tire could fall off.

Changing a Flat Tire

NOTE

If the following occurs while driving, it could indicate a flat tire.

- Steering becomes difficult.
- The vehicle begins to vibrate excessively.
- The vehicle pulls in one direction.

If you have a flat tire, drive slowly to a level spot that is well off the road and out of the way of traffic to change the tire. Stopping in traffic or on the shoulder of a busy road is dangerous.

⚠WARNING

Jacking a Vehicle:
Changing a tire is dangerous if not done properly. The vehicle can slip off the jack and seriously injure someone.
Be sure to follow the directions for changing a tire, and never get under a vehicle that is supported only by a jack.

Passenger in Vehicle Supported by a Jack:
Allowing someone to remain in a vehicle supported by a jack is dangerous. The occupant could cause the vehicle to fall resulting in serious injury. Never allow anyone inside a vehicle supported by a jack.

NOTE

Make sure the jack is well lubricated before using it.

1. Park on a level surface off the right-of-way and firmly set the parking brake.
2. Shift into Park (P) and turn off the engine.
3. Turn on the hazard warning flasher.
4. Have everyone get out of the vehicle and away from the vehicle and traffic.
5. Remove the jack, tool, and spare tire (page 7-3).
6. Block the wheel diagonally opposite the flat tire. When blocking a front wheel, place the block both in front and behind the tire. When blocking a rear wheel, place the block both in front and behind the tire.

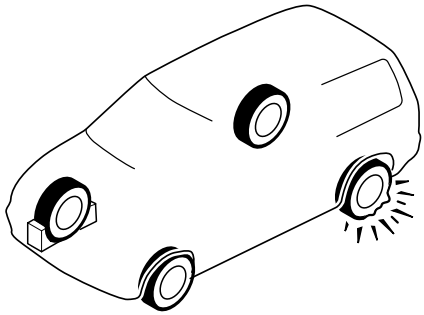

⚠CAUTION

If the jack leans towards the front or the rear when jacking up, lower the vehicle until the wheels are firmly on the ground. Then confirm that the parking brake is set, the shift lever is in Park (P), then push the blocks firmly under the blocked tire.

▼Removing a Flat Tire

1. Pry off the wheel cover with the beveled end of the jack lever.

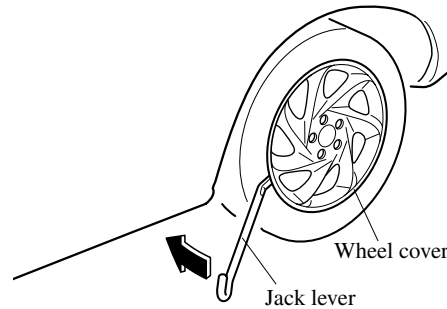

NOTE

Force the end of the jack lever firmly between wheel and cover, or removal will be difficult.

⚠ CAUTION

Align the notch on the wheel cover with the valve stem when installing it.

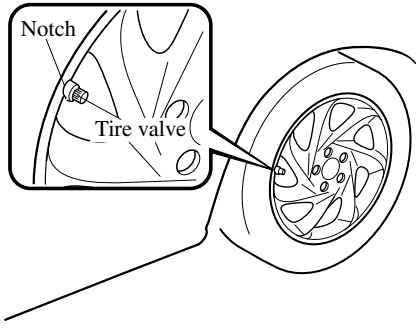

Damage could occur during installation if the wheel cover is not properly aligned.

2. Loosen the lug nuts by turning them counterclockwise one turn each, but don't remove any until the tire has been raised off the ground.

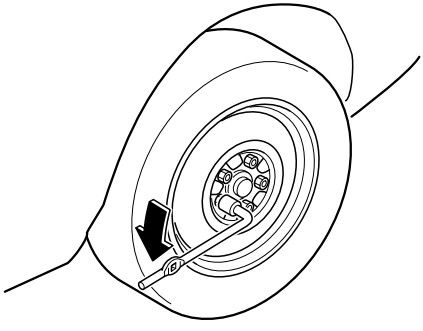

3. Place the jack under the jacking position closest to the tire being changed.

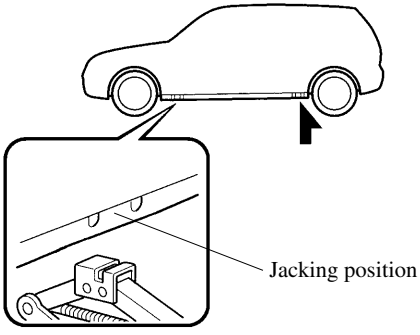

⚠ *WARNING*

Incorrect Jacking Position:
Attempting to jack the vehicle in positions other than those recommended in this manual is dangerous. The vehicle could slip off the jack and seriously injure or even kill someone. Use only the front and rear jacking positions recommended in this manual.

Improper Jack:
Using a jack that isn't designed for your Mazda is dangerous. The vehicle could slip off the jack and seriously injure someone. Use only the jack provided with your Mazda.

Placing Objects Under the Jack:
Jacking the vehicle with an object under the jack is dangerous. The jack could slip and someone could be seriously injured by the jack or the falling vehicle. Never place objects under the jack.

4. Insert the jack lever and attach the lug wrench to tire jack.

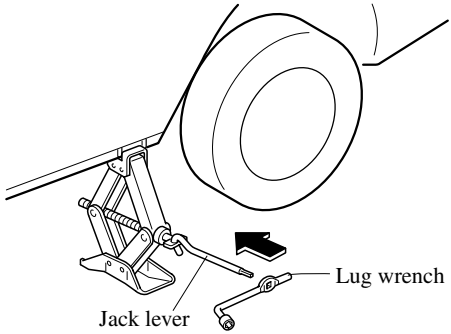

5. Turn the lug wrench clockwise and raise the vehicle high enough so that the spare tire can be installed. Before removing the lug nuts, make sure your Mazda is firmly in position and that it cannot slip or move.

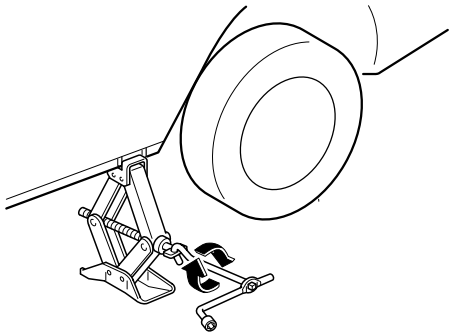

6. Remove the lug nuts by turning them counterclockwise; then remove the wheel.

▼Locking Lug Nuts

If your vehicle has optional antitheft wheel lug nuts, one on each wheel will lock the tires and you must use a special key to unlock them. This key is attached to the lug wrench and is stored with the spare tire. Register them with the lock manufacturer by filling out the card provided in the glove box and mailing it in the accompanying envelope. If you lose your key, consult an Authorized Mazda Dealer or use the lock manufacturer's order form, which is with the registration card.

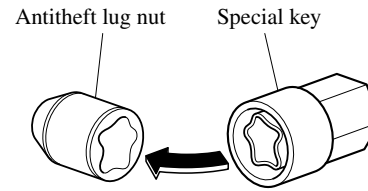

To remove an antitheft lug nut

1. Get the key for the locking lug nut.
2. Place it on top of the nut, and be sure to hold the key square to it. If you hold the key at an angle, you may damage both key and nut. Don't use a power impact wrench.
3. Place the lug wrench on top of the key and apply pressure. Turn the wrench counterclockwise.

To replace the nut

1. Place the key on top of the nut.
2. Place the lug wrench on top of the key, apply pressure, and turn it clockwise.

▼Mounting the Spare Tire

1. Remove dirt and grime from the mounting surfaces of the wheel and hub, including the hub bolts, with a cloth.

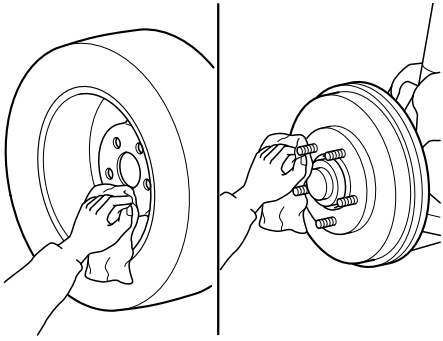

⚠ WARNING

Removing Dirt and Grime from Wheels, Hubs and Hub Bolts:
When changing or replacing a tire, not removing dirt and grime from the mounting surfaces of the wheel, hub and hub bolts is dangerous. The lug nuts could loosen while driving and cause the tire to come off, resulting in an accident. Make sure the mounting surfaces of the wheel, hub and lug nuts are clean before changing or replacing tires.

2. Mount the spare tire.
3. Install the lug nuts with the beveled edge inward; tighten them by hand.

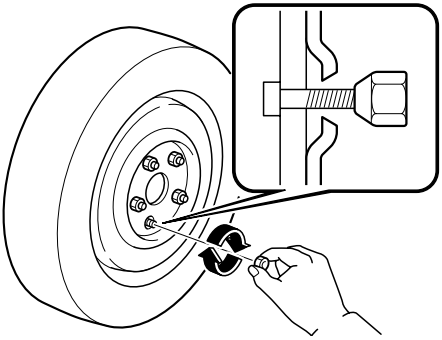

⚠ WARNING

Don't apply Oil or Grease to Lug Nuts, Bolts:
Applying oil or grease to lug nuts and bolts is dangerous. The lug nuts could loosen while driving and cause the tire to come off, resulting in an accident. In addition, lug nuts and bolts could be damaged if tightened more than necessary. Do not apply oil or grease to lug nuts and bolts and do not tighten the lug nuts beyond the recommended tightening torque.

4. Turn the lug wrench counterclockwise and lower the vehicle. Use the lug wrench to tighten the nuts in the order shown.

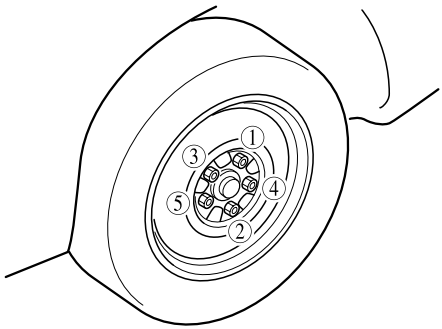

If you're unsure of how tight the nuts should be, have them inspected at a service station.

Nut tightening torque:

N·m (kgf·m, ft·lbf)	108—147 (11—15, 80—108)

⚠ WARNING

Loose Lug Nuts:
Improperly or loosely tightened lug nuts are dangerous. The wheel could wobble or come off. This could result in loss of vehicle control and cause a serious accident. Always securely and correctly tighten the lug nuts.

Metric Studs and Lug Nuts:
Because the wheel studs and lug nuts on your Mazda have metric threads, using a non-metric nut is dangerous. On a metric stud, it would not secure the wheel and would damage the stud, which could cause the wheel to slip off and cause an accident. Be sure to reinstall the same nuts you removed or replace them with metric nuts of the same configuration.

Incorrect Tire Air Pressure:
Driving on tires with incorrect air pressure is dangerous. Tires with incorrect pressure could affect handling and result in an accident. Don't drive with any tires that have incorrect air pressure. When you check the regular tires' air pressure, check the spare tire, too.

5. Put the flat tire in the special vinyl bag and tie it at the top.

6. With the tire facing outward, punch a hole through the vinyl bag and the center hole, using the flat tire securing bolt.

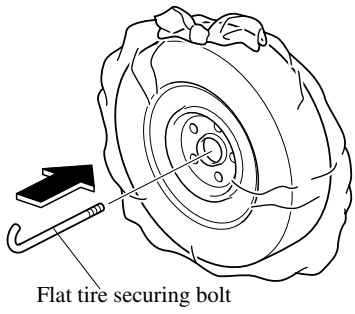

7. Lift the anchor clip on the back of third-row seat.

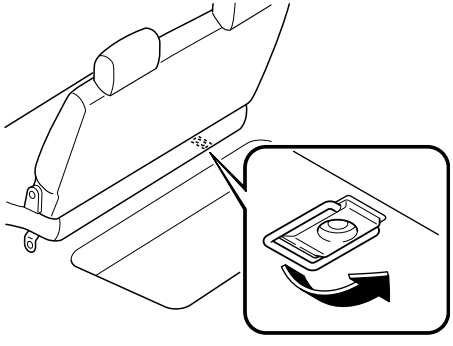

8. Install the flat tire with the tire securing bolt hooked in the anchor clip as shown below.

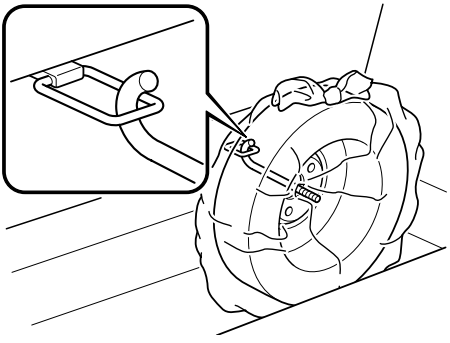

9. Secure the flat tire with the tire clamp and wing nut as shown below.
   Have the damaged tire repaired as soon as possible.

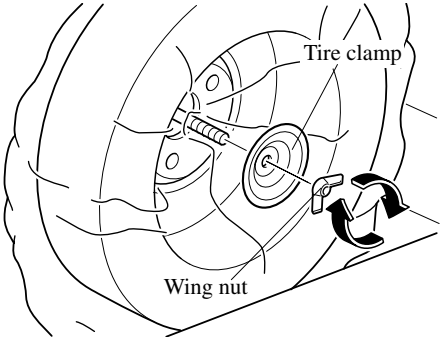

NOTE

- If the tire rattles even through the wing nut is tightened, reverse the tire clamp and retighten the wing nut.
- To prevent the jack and tool from rattling, store them properly.

Overheating

If the temperature gauge indicates overheating, the vehicle loses power, or you hear a loud knocking or pinging noise, the engine is probably too hot.

If this happens:

1. Drive safely to the side of the road and park off the right-of-way.
2. Shift into park (P).
   Apply the parking brake.
3. Turn off the air conditioner.

⚠ *WARNING*

Steam from Overheated Engine:
Steam from an overheated engine is dangerous. The escaping steam could seriously burn you. Open the hood ONLY after steam is no longer escaping from the engine.

4. Check whether coolant or steam is escaping from under the hood or from the engine compartment.

   If steam is coming from the engine compartment:
   Don't go near the front of the vehicle. Stop the engine. Then turn the ignition switch to the ON position without starting the engine.
   The radiator cooling fans will start to cool the engine.

   If neither coolant nor steam is escaping:
   Open the hood and idle the engine until it cools. If this doesn't lower the temperature, stop the engine and let it cool.

5. Check the coolant level.
   If it's low, look for leaks in the radiator hoses and connections, heater hoses and connections, radiator, and water pump.
   If you find a leak or other damage, or if coolant is still leaking, stop the engine and call an Authorized Mazda Dealer.

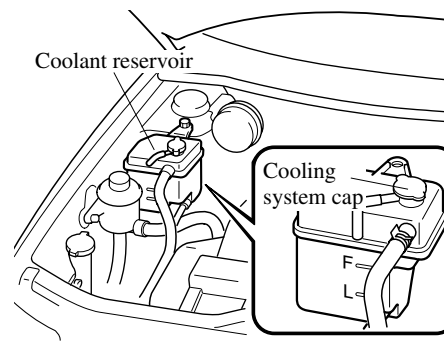

If you find no problems, the engine is cool, and no leaks are obvious, carefully add coolant as required (page 8-11).

Overheating

⚠ *WARNING*

Cooling System Cap:
When the engine and radiator are hot, scalding coolant and steam may shoot out under pressure and cause serious injury. Don't remove the cooling system cap when the engine and radiator are hot.

⚠ CAUTION

If the engine continues to overheat or frequently overheats, have the cooling system inspected. The engine could be seriously damaged unless repairs are made.

Starting a Flooded Engine

If the engine fails to start, it may be flooded (excessive fuel in the engine).

Follow this procedure:

1. Depress the accelerator all the way and hold it there.
2. Turn the ignition switch to the START position and hold it there—for up to 10 seconds. If the engine starts, release the key and accelerator immediately because the engine will suddenly rev up.
3. If the engine fails to start, crank it without using the accelerator—for up to 10 seconds.

Jump-Starting

Jump-starting is dangerous if done incorrectly. So follow the procedure carefully. If you feel unsure about jump-starting, we strongly recommend that you have a competent service technician do the work.

⚠ *WARNING*

Battery-Related Explosion:
Flames and sparks near open battery cells are dangerous. Hydrogen gas, produced during normal battery operation, could ignite and cause the battery to explode. An exploding battery can cause serious burns and injuries. Keep all flames, including cigarettes, and sparks away from open battery cells.

Low Fluid Level or Frozen Battery:
Jump-starting a frozen battery or one with a low fluid level is dangerous. It may rupture or explode, causing serious injury.
Don't jump-start a frozen battery or one with a low fluid level.

⚠ CAUTION

Use only a 12 V booster system. You can damage a 12 V starter, ignition system, and other electrical parts beyond repair with a 24 V power supply (two 12 V batteries in series or a 24 V motor generator set).

1. Make sure the booster battery is 12 V and that its negative terminal is grounded.

Emergency Starting

2. If the booster battery is in another vehicle, don't allow the vehicles to touch. Turn off the engine of the vehicle with the booster battery and all unnecessary electrical loads in both vehicles.
3. Connect the jumper cables in the exact sequence as in the illustration.
   - Connect one end of a cable to the positive terminal on the discharged battery (1).
   - Attach the other end to the positive terminal on the booster battery (2).
   - Connect one end of the other cable to the negative terminal of the booster battery (3).
   - Connect the other end to a solid, stationary, exposed metallic point (for example, the engine hanger) away from the discharged battery (4).

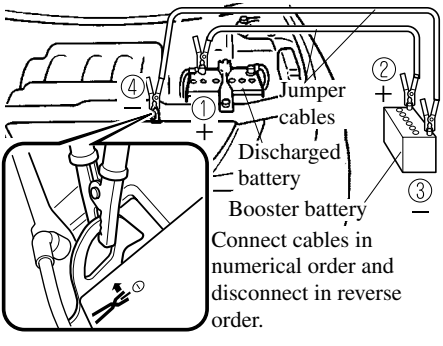

⚠ WARNING

Connecting to Negative Terminal:
Connecting the end of the second cable to the negative (–) terminal of the discharged battery is dangerous. A spark could cause the gas around the battery to explode and injure someone. Connect the cable to a point away from the battery.

Connecting Jumper Cable to a Moving Part:
Connecting a jumper cable near or to a moving parts (cooling fans, belts) is dangerous. The cable could get caught when the engine starts and cause serious injury. Never connect a jumper cable to or near any part that moves.

4. Start the engine of the booster vehicle and run it a few minutes. Then start the engine of the other vehicle.
5. When finished, carefully disconnect the cables in the reverse order described in Step 3.

Push-Starting

You can’t start a vehicle with an automatic transaxle by pushing it.

Emergency Towing

Towing Description

We recommend that towing be done only by an Authorized Mazda Dealer or a commercial tow-truck service.

Proper lifting and towing are necessary to prevent damage to the vehicle. Government and local laws must be followed.

A towed vehicle usually should have its front wheels off the ground. If excessive damage or other conditions prevent this, use wheel dollies.

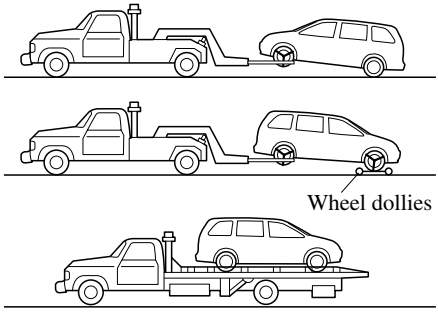

When towing with the rear wheels on the ground, release the parking brake.

⚠ CAUTION

Don’t tow the vehicle pointed backward with driving wheels on the ground. This may cause internal damage to the transaxle.

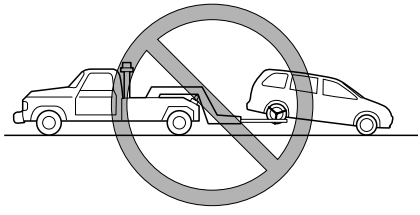

⚠ CAUTION

Don’t tow with sling-type equipment. This could damage your vehicle. Use wheel-lift or flatbed equipment.

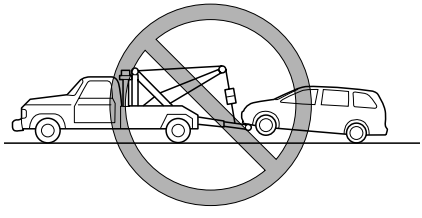

Tiedown Hooks

⚠CAUTION

Don't use the tiedown hooks under the front and rear for towing.
They are designed ONLY for tying down the vehicle when it's being transported. Using them for towing will damage the bumper.

▼Tiedown Hooks-Front

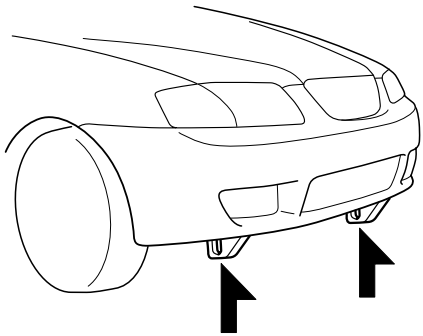

▼Tiedown Hook-Rear

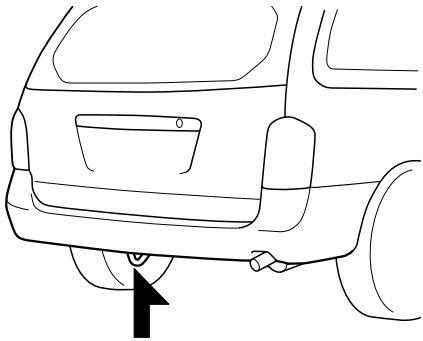

Recreational Towing

An example of " recreational towing " is towing your vehicle behind a motorhome. The transaxle is not designed for towing this vehicle on all 4 wheels.
When doing recreational towing refer to " Towing Description " (page 7-20) and " Tiedown Hooks " (page 7-21) and carefully follow the instructions.

8 Maintenance and Care

How to keep your Mazda in top condition.

Introduction 8- 2
Introduction 8- 2

Scheduled Maintenance 8- 3
Scheduled Maintenance 8- 3

Owner Maintenance 8- 6
Owner Maintenance Schedule 8- 6
Owner Maintenance Precautions 8- 7
Engine Compartment Overview 8- 8
Engine Oil 8- 9
Engine Coolant 8-11
Brake Fluid 8-13
Power Steering Fluid 8-14
Automatic Transaxle Fluid (ATF) 8-15
Washer Fluid 8-16
Body Lubrication 8-17
Air Filter 8-17
Wiper Blades 8-18
Battery 8-22
Tires 8-23
Light Bulbs 8-27
Fuses 8-33

Appearance Care 8-38
How to Minimize Environmental Paint Damage 8-38
Exterior Care 8-40
Interior Care 8-43

Introduction

Be extremely careful and prevent injury to yourself and others or damage to your vehicle when using this manual for inspection and maintenance.

If you're unsure about any procedure it describes, we strongly urge you to have a reliable and qualified service shop perform the work, preferably an Authorized Mazda Dealer.

Factory-trained Mazda technicians and genuine Mazda parts are best for your vehicle. Without this expertise and the parts that have been designed and made especially for your Mazda, inadequate, incomplete, and insufficient servicing may result in problems. This could lead to vehicle damage or an accident and injuries.

For expert advice and quality service, consult an Authorized Mazda Dealer.

The owner should retain evidence that proper maintenance has been performed as prescribed.

Claims against the warranty resulting from lack of maintenance, as opposed to defective materials or authorized Mazda workmanship, will not be honored.

Any auto repair shop using parts equivalent to your Mazda's original equipment may perform maintenance. **But we recommend that it always be done by an Authorized Mazda Dealer using genuine Mazda parts.**

Scheduled Maintenance

Follow Schedule 1 if the vehicle is operated mainly where none of the following conditions apply.
If any do apply, follow Schedule 2 (Canada and Puerto Rico residents follow Schedule 2).

- Repeated short-distance driving
- Driving in dusty conditions
- Driving with extended use of brakes
- Driving in areas where salt or other corrosive materials are being used
- Driving on rough or muddy roads
- Extended periods of idling or low-speed operation
- Driving for long periods in cold temperatures or extremely humid climates
- Towing a trailer

NOTE
After the prescribed period, continue to follow the described maintenance at the recommended intervals.

Scheduled Maintenance

▼Schedule 1

I : Inspect and repair, clean, adjust, or replace if necessary.
R: Replace
L: Lubricate
C: Clean

Maintenance Interval (Number of months or kilometers (miles), whichever comes first)	Months	6	12	18	24	30	36	42	48
	×1000 km	12	24	36	48	60	72	84	96
	×1000 miles	7.5	15	22.5	30	37.5	45	52.5	60

ENGINE

Engine oil	R	R	R	R	R	R	R	R
Engine oil filter	R	R	R	R	R	R	R	R
Drive belts				I				I
PCV valve*1								I

IGNITION SYSTEM

Spark plugs (Platinum tipped type)	**Replace every 160,000 km (100,000 miles)**

FUEL SYSTEM

Air filter			C		R			C
Fuel lines and hoses*1				I				I

COOLING SYSTEM

Cooling system				I				I
Engine coolant	**Replace at first 72,000 km (45,000 miles) or 36 months ; after that, every 48,000 km (30,000 miles) or 24 months**							

CHASSIS and BODY

Brake lines, hoses and connections				I				I
Brake fluid				R				R
Disc brakes				I				I
Drum brakes				I				I
Steering operation and linkages				I				I
Front suspension ball joints				I				I
Driveshaft dust boots				I				I
Bolts and nuts on chassis and body				I				I
Exhaust system heat shields				I				I
All locks and hinges	L	L	L	L	L	L	L	L

AIR CONDITIONER SYSTEM (if equipped)

Refrigerant amount		I		I		I		I
Compressor operation		I		I		I		I
Cabin air filter (if equipped)	**Replace once a year or every 20,000 km (12,000 miles)**							

*1 According to state and federal regulations, failure to perform maintenance on these items will not void your emissions warranties. However, Mazda recommends that all maintenance services be performed at the recommended time or kilometrage (mileage) period to ensure long-term reliability.

▼Schedule 2

I : Inspect and repair, clean, adjust, or replace if necessary.
R: Replace **L :** Lubricate **C :** Clean

Maintenance Interval (Number of months or kilometers (miles), whichever comes first)	Months	4	8	12	16	20	24	28	32	36	40	44	48
	×1000 km	8	16	24	32	40	48	56	64	72	80	88	96
	×1000 miles	5	10	15	20	25	30	35	40	45	50	55	60
ENGINE													
Engine oil	Puerto Rico	Replace every 5,000 km (3,000 miles) or 3 months											
	Others	R	R	R	R	R	R	R	R	R	R	R	R
Engine oil filter		R	R	R	R	R	R	R	R	R	R	R	R
Drive belts							I						I
PCV valve*1													I
Hoses and tubes for emission(Puerto Rico)													I
IGNITION SYSTEM													
Spark plugs (Platinum tipped type)	USA	Replace every 96,000 km (60,000 miles)											
	Others*2	Replace every 160,000 km (100,000 miles)											
FUEL SYSTEM													
Air filter	Puerto Rico			C			R			C			R
	Others				C			R				C	
Fuel lines and hoses*1							I						I
COOLING SYSTEM													
Cooling system							I						I
Engine coolant		Replace at first 72,000 km (45,000 miles) or 36 months ; after that, every 48,000 km (30,000 miles) or 24 months											
Engine coolant level		I	I	I	I	I	I	I	I	I	I	I	I
ELECTRICAL SYSTEM													
Function of all lights		I	I	I	I	I	I	I	I	I	I	I	I
CHASSIS and BODY													
Brake lines, hoses and connections							I						I
Brake fluid							R						R
Brake fluid level		I	I	I	I	I	I	I	I	I	I	I	I
Disc brakes				I			I			I			I
Drum brakes							I						I
Tire inflation pressure and tire wear		I	I	I	I	I	I	I	I	I	I	I	I
Steering operation and linkages							I						I
Power steering fluid level		I	I	I	I	I	I	I	I	I	I	I	I
Front suspension ball joints							I						I
Driveshaft dust boots							I						I
Bolts and nuts on chassis and body				I			I			I			I
Exhaust system heat shields							I						I
All locks and hinges		L	L	L	L	L	L	L	L	L	L	L	L
Washer fluid level		I	I	I	I	I	I	I	I	I	I	I	I
AIR CONDITIONER SYSTEM (if equipped)													
Refrigerant amount				I			I			I			I
Compressor operation				I			I			I			I
Cabin air filter (if equipped)		Replace once a year or every 20,000 km (12,000 miles)											

*1 According to state and federal regulations, failure to perform maintenance on these items will not void your emissions warranties. However, Mazda recommends that all maintenance services be performed at the recommended time or kilometrage (mileage) period to ensure long-term reliability.

*2 If the vehicle is operated under any of the following conditions, change the spark plugs every 96,000 km(60,000 miles) or shorter.
a)Repeated short-distance driving
b)Extended periods of idling or low-speed operation
c)Driving for long periods in cold temperatures or extremely humid climates
d)Towing a trailer

Owner Maintenance Schedule

The owner or a qualified service technician should make these vehicle inspections at the indicated intervals to ensure safe and dependable operation.

Bring any problem to the attention of an Authorized Mazda Dealer or qualified service technician as soon as possible.

▼When Refueling

- Brake fluid level (page 8-13)
- Engine coolant level (page 8-11)
- Engine oil level (page 8-9)
- Washer fluid level (page 8-16)

▼At Least Monthly

- Tire inflation pressures (page 8-23)

▼At Least Twice a Year (For Example, Every Spring and Fall)

- Automatic transaxle fluid level (page 8-15)
- Power steering fluid level (page 8-14)

You can do the following scheduled maintenance items if you have some mechanical ability and a few basic tools and if you closely follow the directions in this manual.

- Air filter (page 8-17)
- Engine coolant (page 8-11)
- Engine oil (page 8-10)

Owner Maintenance Precautions

Improper or incomplete service may result in problems. This section gives instructions only for items easy to perform.

As explained in the Introduction (page 8-2), several procedure can be done only by a qualified service technician with special tools.

Improper owner maintenance during the warranty period may affect warranty coverage. For details, read the separate Mazda Warranty statement provided with the vehicle. If you're unsure about any servicing or maintenance procedure, have it done by an Authorized Mazda Dealer.

There are strict environmental laws regarding the disposal of waste oil and fluids. Please dispose of your waste carefully and with due regard to the environment.

We recommend that you entrust the oil and fluid changes of your vehicle to an Authorized Mazda Dealer.

⚠ *WARNING*

Maintenance Procedures:
Performing maintenance work on a vehicle is dangerous if not done properly. You can be seriously injured while performing some maintenance procedure. If you lack sufficient knowledge and experience or the proper tools and equipment to do the work, have it done by a qualified technician.

Running the Engine:
Working under the hood with the engine running is dangerous. It becomes even more dangerous when you wear jewelry or loose clothing.
Either can become entangled in moving parts and result in injury.
Therefore, if you must run the engine while working under the hood, make certain that you remove all jewelry (especially rings, bracelets, watches, and necklaces) and all neckties, scarves, and similar loose clothing before getting near the engine or cooling fan, with may turn on unexpectedly.

Electrical Fan and Engine Inspection:
Inspecting the engine with the ignition switch in the ON position is dangerous. The cooling fan could come on unexpectedly even when the engine isn't running. You could be seriously injured by the fan. Turn the ignition switch off and remove the key from the ignition switch when you inspect the engine.

Engine Compartment Overview

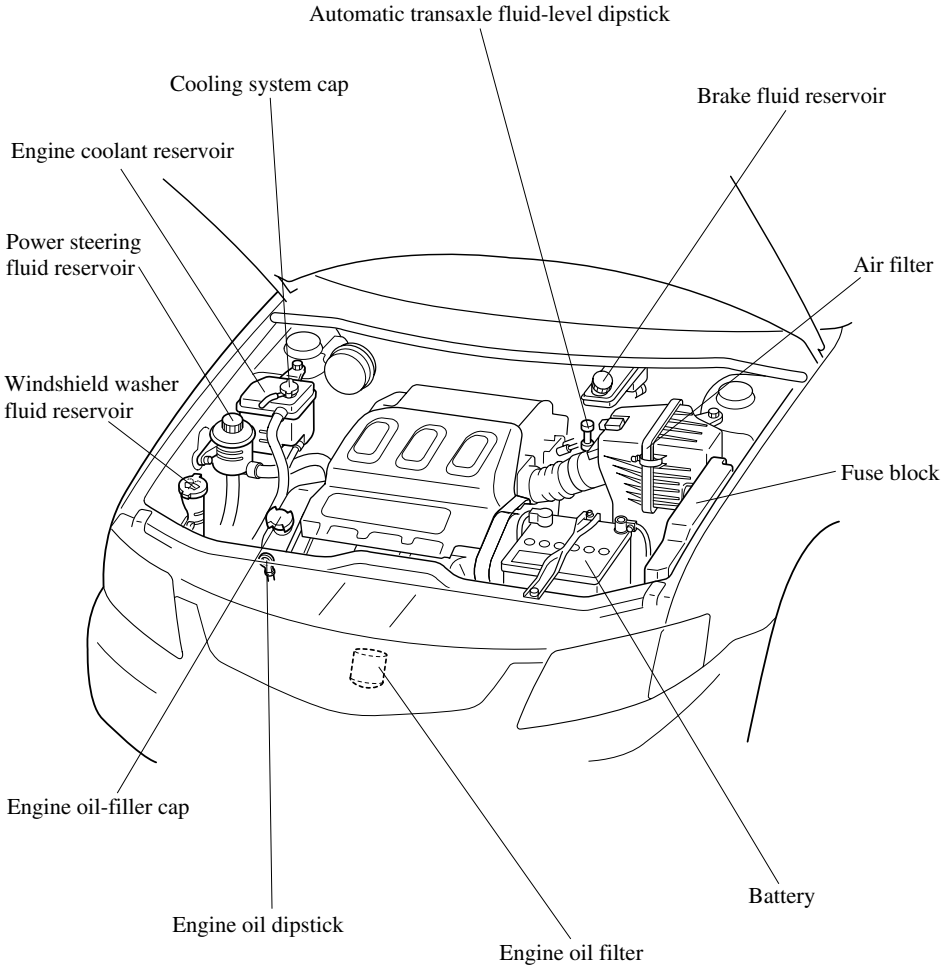

Engine Oil

▼ Recommended Oil

Oil container labels provide important information.

(ILSAC)

The quality designation **SL** or **ILSAC** must be on the label.

Engine oil viscosity, or thickness, has an effect on fuel economy and cold-weather operation (starting and oil flow).
Low-viscosity engine oils can provide improved fuel economy and cold-weather performance.
But high-temperature weather conditions require higher-viscosity engine oils for satisfactory lubrication.

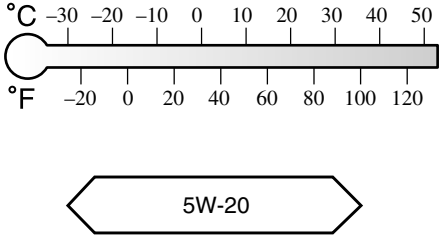

When choosing an oil, consider the temperature range your vehicle will operate in before the next oil change. Then select the recommended viscosity from this chart.

⚠ CAUTION

Using oils of viscosity besides those recommended for specific temperature ranges could result in engine damage.

Energy conserving oils are recommended. A chief contribution they make to fuel economy is reducing the amount of fuel necessary to overcome engine friction.

▼ Inspecting Engine Oil Level

1. Be sure the vehicle is on a level surface.
2. Warm up the engine to normal operating temperature.
3. Turn it off and wait 5 minutes for the oil to return to the oil pan.
4. Pull out the dipstick, wipe it clean, and reinsert it fully.

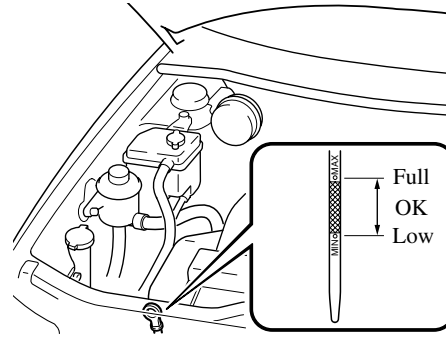

5. Pull it out again and examine the level. It's OK between MIN and MAX. But if it's near or below MIN, add enough oil to bring the level to MAX.

⚠ CAUTION

Don't add engine oil over MAX. This may cause engine damage.

6. Make sure the O-ring is positioned properly before reinserting the dipstick.

▼ Changing Engine Oil and Filter

Change engine oil and filter according to Scheduled Maintenance (page 8-3).

Please act responsibly—protect the environment and take used oil to a recycling facility. Ask your dealer or a service station for information.

⚠ *WARNING*

Handling Used Engine Oil:
Continuous contact with used engine oil is dangerous. It could cause skin cancer. Always wash with soap and water immediately after changing oil and filter.

⚠ CAUTION

Remove oil splatter from the exhaust manifold, the exhaust pipe and the shield. Oil left on these areas will smoke when the engine is running.

Changing engine oil

⚠ *WARNING*

Checking or Changing Engine Oil:
Hot engine oil is dangerous. If the engine has been running, the engine oil becomes very hot. You could be seriously burned. Don't check or change the engine oil when the engine is hot.

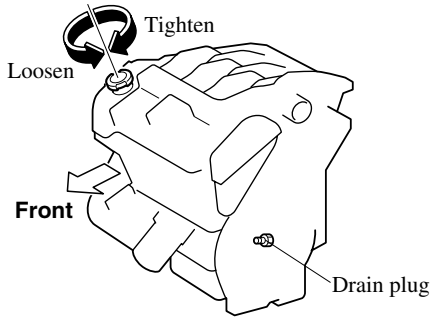

1. Warm up the engine for a few minutes and turn it off. Remove the oil-filler cap.
2. Remove the drain plug and drain the oil into a suitable container.
3. Replace the plug tightly after the oil has thoroughly drained.
4. Fill the engine with new oil to the MAX mark on the dipstick.
5. Securely replace the oil-filler cap.
6. Start the engine and inspect around the drain plug for leaks.
7. Turn it off and wait 5 minutes for the oil to return to the oil pan.

Check the oil level and fill to the MAX mark if necessary.

Oil capacity (General reference only, refer to Specifications section for capacities.)

NOTE

- The indicated engine oil capacities are for general reference purposes only. When adding or changing oil, verify the engine oil level with the oil dipstick.
- Use only specified engine oil (page 10-4).

Changing oil filter

Because you need a special tool to retighten the filter, an Authorized Mazda Dealer should do the work.

Engine Coolant

▼ Inspecting Coolant Level

⚠ *WARNING*

Hot Engine:
A hot engine is dangerous. If the engine has been running, parts of the engine compartment can become very hot. You could be burned. Don't inspect the coolant system or add coolant when the engine is hot.

Inspect the antifreeze protection and coolant level in the coolant reservoir at least once a year—at the beginning of the winter season—and before traveling where temperatures may drop below freezing.

Inspect the condition and connections of all cooling system and heater hoses. Replace any that are swollen or deteriorated.

The coolant should be at full in the radiator and between the F and L marks on the coolant reservoir when the engine is cool.

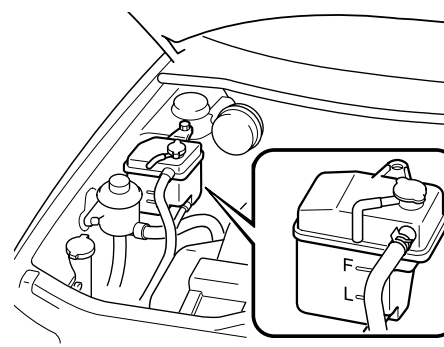

If it's at or near L, add enough coolant to the coolant reservoir to provide freezing and corrosion protection and to bring the level to F.

⚠ CAUTION

Radiator coolant will damage paint. Rinse it off quickly.

Do not overfill.
If new coolant is required frequently, consult an Authorized Mazda Dealer.

▼ Changing Coolant (Without Rear Heater)

Change coolant according to Scheduled Maintenance (page 8-3).

⚠ CAUTION

- Use only soft (demineralized) water in the coolant mixture. Water that contains minerals will cut down on the coolant's effectiveness.
- Don't add only water. Always add a proper coolant mixture.
- The engine has aluminum parts and must be protected by an ethylene-glycol-based coolant to prevent corrosion and freezing.
- DO NOT USE alcohol or methanol antifreeze. DO NOT MIX alcohol or methanol with the coolant. This could damage the cooling system.
- Don't use a solution that contains more than 60 % antifreeze. This would reduce effectiveness.

For mixture percentage:

Protection	Volume	
	Antifreeze solution	Water
Above -16°C (3°F)	35%	65%
Above -26°C (-15°F)	45%	55%
Above -40°C (-40°F)	55%	45%

To change coolant

⚠ WARNING

Removing the Cooling System Cap:
Removing the cooling system cap or drain plug while the engine is running or hot is dangerous. This might lead to cooling system and engine damage and could result in serious injury from escaping hot coolant or steam. Turn off the engine and wait until it's cool. Even then, be very careful when removing the cap or drain plug. Wrap a thick cloth around it and slowly turn it counterclockwise to the first stop. Step back while the pressure escapes. When you're sure all the pressure is gone, press down on the cap—still using a cloth—turn the cap, and remove it.

1. Remove the cooling system cap.

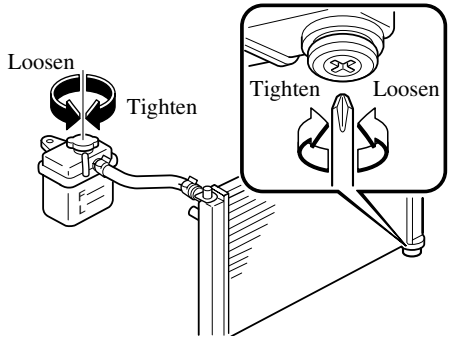

2. Only when the engine is cool, remove the radiator drain plug and drain the coolant into a suitable container.
3. Flush out the system with running water.
4. Drain the system completely. Insert and tighten the plug. Add as much ethylene-glycol-based coolant and water as necessary to provide freezing and corrosion protection.
5. In extremely cold climates, add the amount recommended in the coolant manufacturer's instructions.
6. Run the engine at idle with the cooling system cap off. Slowly add additional coolant if necessary.
7. At this point, wait until the engine reaches normal operating temperature; then depress the accelerator two or three times. Add more coolant, if necessary, until the system is full.
8. Install the cooling system cap. Inspect all connections for leaks. Inspect the level in the coolant reservoir one more time.

▼ Changing Coolant (With Rear Heater)

Have an Authorized Mazda Dealer change the coolant according to the Scheduled Maintenance (page 8-3).

Brake Fluid

▼ Inspecting Brake Fluid Level

Inspect the fluid level in the reservoir regularly. It should be kept at MAX. The level normally drops with accumulated distance, a condition associated with wear of brake linings. If it is excessively low, have the brake system inspected by an Authorized Mazda Dealer.

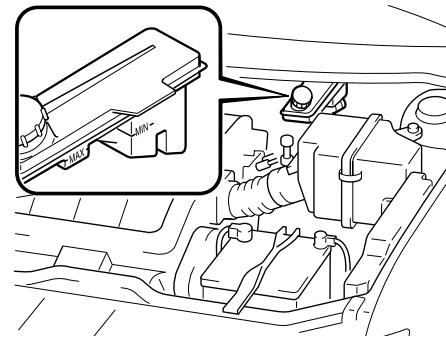

▼Adding Brake Fluid

⚠WARNING

Spilled Brake Fluid:
Spilled brake fluid is dangerous. If it gets in your eyes, they could be seriously injured. If this happens, immediately flush your eyes with water and get medical attention. Brake fluid spilled on a hot engine could cause a fire. Be careful not to spill brake fluid on yourself or on the engine.

Low Brake Fluid Levels:
Low brake fluid levels are dangerous. Low levels could signal brake lining wear or a brake system leak. Your brakes could fail and cause an accident. If you find a low fluid level, have the brakes inspected.

If the fluid level is low, add fluid until it reaches MAX.
Before adding fluid, thoroughly clean the area around the cap.

⚠CAUTION

- Brake fluid will damage painted surfaces. If brake fluid does get on a painted surface, wipe it off immediately.
- Using nonspecified brake fluids (page 10-4) will damage the system. Mixing different fluids will also damage it.
  If the brake system frequently requires new fluid, consult an Authorized Mazda Dealer.

Power Steering Fluid

▼Inspecting Power Steering Fluid Level

⚠CAUTION

To avoid damage to the power steering pump, don't operate the vehicle for long periods when the power steering fluid level is low.

NOTE

Use specified power steering fluid (page 10-4).

Inspect the fluid level in the reservoir at each engine oil change with the engine off and cold. Add fluid if necessary; it does not require periodic changing.

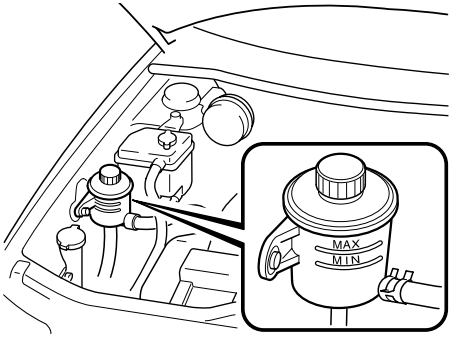

The level must be kept between MIN and MAX.

Visually examine the lines and hoses for leaks and damage.

If new fluid is required frequently, consult an Authorized Mazda Dealer.

Automatic Transaxle Fluid (ATF)

▼Inspecting Automatic Transaxle Fluid Level

The automatic transaxle fluid level should be inspected regularly. Measure it as described below.

The volume of fluid changes with the temperature. Fluid must be checked at idle without driving at normal operating temperature.

⚠CAUTION

- Low fluid level causes transaxle slippage. Overfilling can cause foaming, loss of fluid, and transaxle malfunction.
- Use specified fluid (page 10-4). A nonspecified fluid could result in transaxle malfunction and failure.

1. Park on a level surface and set the parking brake firmly.
2. Idle the engine about two minutes. Push down on the brake pedal.
3. Move the shift lever through all ranges and set it at P.

⚠*WARNING*

Sudden Vehicle Movement:
Shifting the shift lever without first depressing the brake pedal is dangerous. The vehicle could move suddenly and cause an accident. Make sure the brake pedal is applied before shifting the shift lever.

4. With the engine still idling, pull out the dipstick, wipe it clean, and put it back.
5. Pull it out again.
   The proper fluid level is marked on the dipstick as follows.

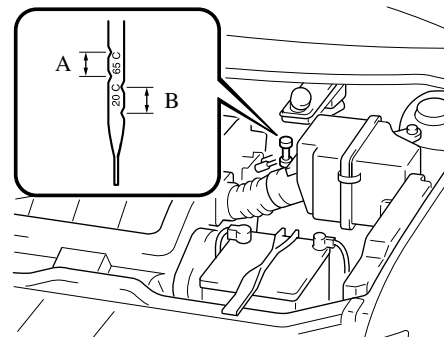

Fluid hot scale A

When the vehicle has been driven and the fluid is at normal operating temperature, about 65°C (150°F), the level must be between Full and Low.

Fluid cold scale B

When the engine has not been running and the outside temperature is about 20°C (70°F), the level must be between Full and Low.

⚠ CAUTION

- Use the cold scale only as a reference.
- If outside temperature is lower than about 20°C (70°F), start the engine and inspect the fluid level after the engine reaches operating temperature.
- If the vehicle has been driven for an extended period at high speeds or in city traffic in hot weather, inspect the level only after stopping the engine and allowing the fluid to cool for 30 minutes.

Fully insert the dipstick. When adding fluid, inspect with the dipstick to make sure it doesn't pass full.

NOTE

Inspect both sides of the dipstick for accurate reading.

Washer Fluid

▼Inspecting Washer Fluid Level

⚠ WARNING

Substitute Washer Fluid:
Using radiator antifreeze as washer fluid is dangerous. If sprayed on the windshield, it will dirty the windshield, affect your visibility, and could result in an accident. Use only windshield washer fluid or plain water in the reservoir.

Inspect fluid level in the washer fluid reservoir; add fluid if necessary.

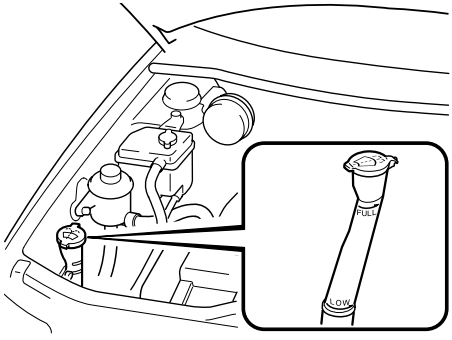

The top of the float should be between FULL and LOW.

Use plain water if washer fluid is unavailable.
But use only washer fluid in cold weather to prevent it from freezing.

Body Lubrication

All moving points of the body, such as door and hood hinges and locks, should be lubricated each time the engine oil is changed. Use a nonfreezing lubricant on locks during cold weather.

Make sure the engine hood's secondary latch keeps the hood from opening when the primary latch is released.

Air Filter

⚠CAUTION

Don't drive without an air filter. This could result in excessive engine wear.

This air filter may be cleaned with compressed air and reused, or replaced, depending on its condition. Unless it is very dirty, simply shake it to remove foreign particles. Each time you inspect it, wipe inside the air cleaner housing with a damp cloth.

▼Replacing the Air Filter

NOTE

If the vehicle is operated in very dusty or sandy areas, replace the filter more often than recommended intervals.

1. Remove the bolt and unfasten the clamps on the air cleaner housing.

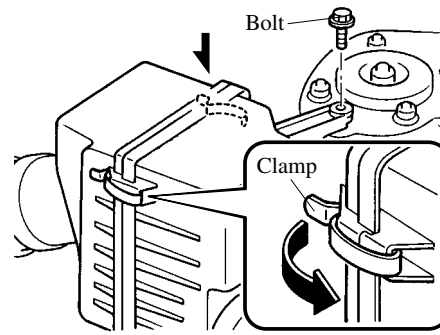

2. Separate the air cleaner housing and remove the filter.

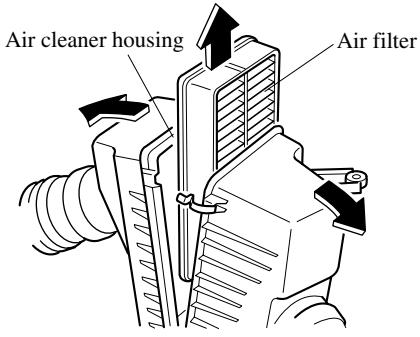

3. Wipe inside the air cleaner housing with a damp cloth.
4. Clean or replace the filter.
5. Install in the reverse order of removal.

Replace the filter according to Scheduled Maintenance (page 8-3).

Wiper Blades

⚠CAUTION

Hot waxes applied by automatic car washes have been known to affect the cleanability of windows.

Contamination of either the windshield or the blades with foreign matter can reduce wiper effectiveness. Common sources are insects, tree sap, and hot wax treatments used by some commercial car washes.

If the blades are not wiping properly, clean the window and blades with a good cleaner or mild detergent; then rinse thoroughly with clean water. Repeat if necessary.

⚠CAUTION

To prevent damage to the wiper blades, don’t use gasoline, kerosene, paint thinner, or other solvents on or near them.

▼Replacing Windshield Wiper Blades

When the wipers no longer clean well, the blades are probably worn or cracked. Replace them.

⚠CAUTION

To prevent damage to the wiper arms and other components, don't move the wipers by hand.

1. Raise the wiper arm and turn the blade assembly to expose the plastic locking clip.
   Compress the clip and slide the assembly downward; then lift it off the arm.

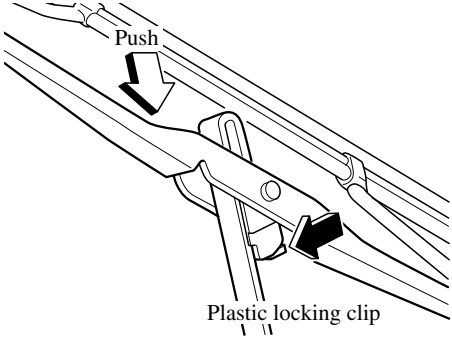

⚠CAUTION

To prevent damage to the windshield, don't let the wiper arm fall on it.

2. Hold the end of the rubber and pull until the tabs are free of the metal support.

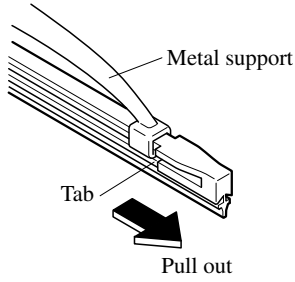

3. Remove the metal stiffeners from the blade rubber and install them in new blades.

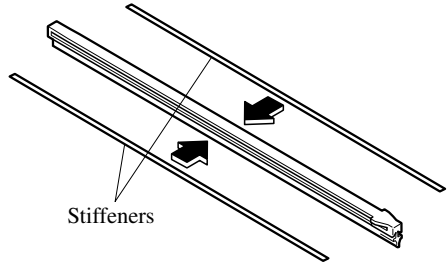

⚠CAUTION

- Don't bend the stiffeners. You need to use them again.
- If the metal stiffeners are switched, the blade's wiping efficiency could be reduced.
  So don't use the driver's side metal stiffeners on the passenger's side, or vice versa.
- Be sure to reinstall the metal stiffeners in the new blade rubber so that the curve is the same as it was in the old blade rubber.

4. Carefully insert the new blade rubber. Then install the blade assembly in the reverse older of removal.

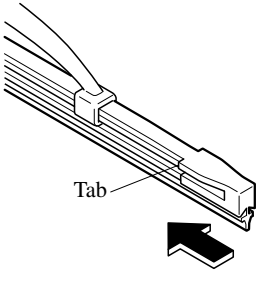

NOTE

Install the blade so that the tabs are toward the bottom of the wiper arm.

▼Replacing Rear Window Wiper Blade

When the wiper no longer cleans well, the blade is probably worn or cracked. Replace it.

⚠CAUTION

To prevent damage to the wiper arm and other components, don't move the wiper by hand.

1. Raise the wiper arm and turn the blade assembly to expose the plastic locking clip.
   Compress the clip and slide the assembly downward; then lift it off the arm.

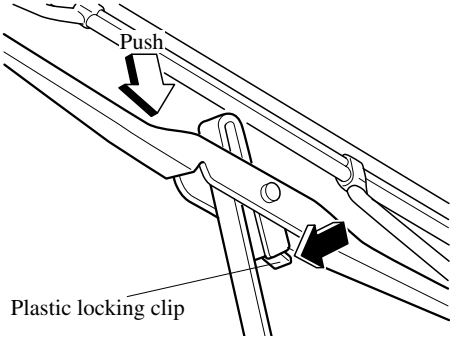

⚠CAUTION

To prevent damage to the rear window, don't let the wiper arm fall on it.

2. Pull down the blade rubber and slide it out of the blade holder.

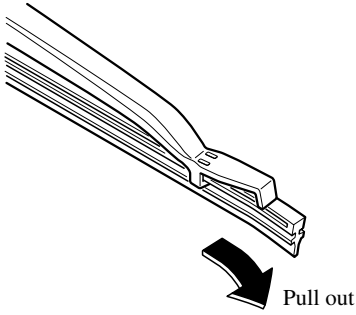

3. Remove the metal stiffeners from the blade rubber and install them in new blades.

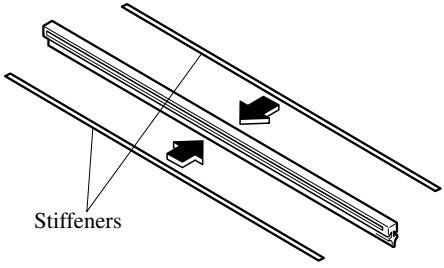

⚠CAUTION

Don't bend the stiffeners. You need to use them again.

4. Carefully insert the new blade rubber. Then install the blade assembly in the reverse order of removal.

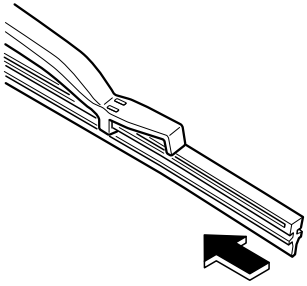

Battery

⚠ WARNING

Battery-Related Lead Materials:
Battery posts, terminals and related accessories contain lead and lead compounds, chemicals known to the State of California to cause cancer and reproductive harm.
Wash hands after handling.

Spilled Battery Fluid:
Spilled battery fluid is dangerous. Battery fluid contains SULFURIC ACID which could cause serious injuries, if it gets in your eyes or on your skin. If this happens, immediately flush your eyes with water for 15 minutes or wash your skin thoroughly and get medical attention. Be careful not to get battery fluid on yourself.

Battery-Related Explosion:
Flames and sparks near open battery cells are dangerous. Hydrogen gas, produced during normal battery operation, could ignite and cause the battery to explode. An exploding battery can cause serious burns and injuries. Keep all flames, including cigarettes, and sparks away from open battery cells.

Children and Batteries:
Allowing children to play near batteries is dangerous. Battery fluid could cause serious injuries if it gets in the eyes or on the skin. Always keep batteries out of the reach of children.

▼Battery Maintenance

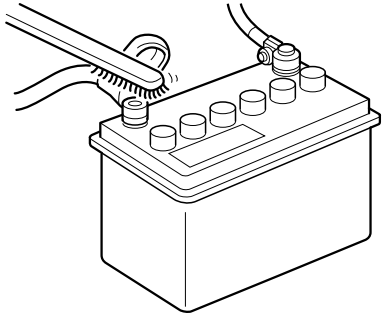

To get the best service from a battery:

- Keep it securely mounted.
- Keep the top clean and dry.
- Keep terminals and connections clean, tight, and coated with petroleum jelly or terminal grease.
- Rinse off spilled electrolyte immediately with a solution of water and baking soda.
- If the vehicle will not be used for an extended time, disconnect the battery cables.

Tires

For reasons of proper performance, safety, and better fuel economy, always maintain recommended tire inflation pressures and stay within the recommended load limits and weight distribution.

⚠ WARNING

Using Different Tire Types:
Driving your vehicle with different types of tires is dangerous. It could cause poor handling and poor braking; leading to loss of control. Except for the limited use of the temporary spare tire, use only the same type tires (radial, bias-belted, bias-type) on all four wheels.

Using Wrong-Sized Tires:
Using any other tire size than what is specified for your Mazda (page 10-6) is dangerous. It could seriously affect ride, handling, ground clearance, tire clearance, and speedometer calibration. This could cause you to have an accident. Use only tires that are the correct size specified for your Mazda.

▼ Tire Inflation Pressure

⚠ WARNING

Incorrect Tire Inflation:
Overinflation or underinflation of tires is dangerous. Adverse handling or unexpected tire failure could result in a serious accident. Always inflate the tires to the correct pressure (page 10-6).

Inspect all tire pressures monthly (including the spare) when the tires are cold. Maintain recommended pressures for the best ride, top handling, and minimum tire wear.

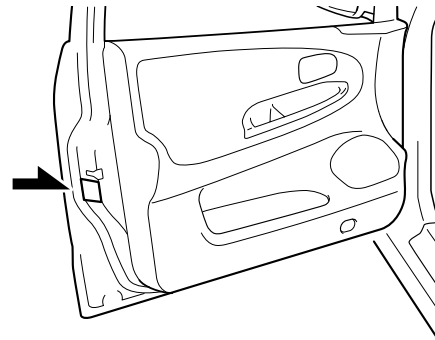

Refer to the specification charts (page 10-6).

NOTE

- Warm tires normally exceed recommended pressures. Don't release air from warm tires to adjust the pressure.
- Underinflation can cause reduced fuel economy and poor sealing of the tire bead, which will deform the wheel and cause separation of tire from rim.
- Overinflation can produce a harsh ride and a greater possibility of damage from road hazards.
  Keep your tire pressure at the correct levels. If one frequently needs inflating, have it inspected.

▼ Tire Rotation

To equalize tread wear, rotate the tires every 12,000 km (7,500 miles) or sooner if irregular wear develops. During rotation, inspect them for correct balance.

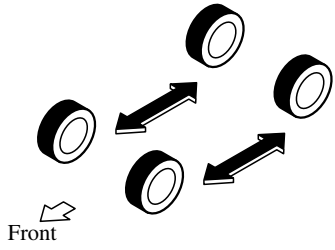

Do not include (TEMPORARY USE ONLY) spare tire in rotation.

Also, inspect them for uneven wear and damage. Abnormal wear is usually caused by one or a combination of the following:

- Incorrect tire pressure
- Improper wheel alignment
- Out-of-balance wheel
- Severe braking

After rotation, inflate all tire pressures to specification (page 10-6) and inspect the lug nuts for tightness.

⚠ CAUTION

Rotate unidirectional tires and radial tires that have an asymmetrical tread pattern or studs only from front to rear, not from side to side. Tire performance will be weakened if rotated from side to side.

▼Replacing a Tire

⚠ *WARNING*

Worn Tires:
Driving with worn tires is dangerous. Reduced braking, steering, and traction could result in an accident. Always use tires that are in good condition.

If a tire wears evenly, a wear indicator will appear as a solid band across the tread. Replace the tire when this happens.

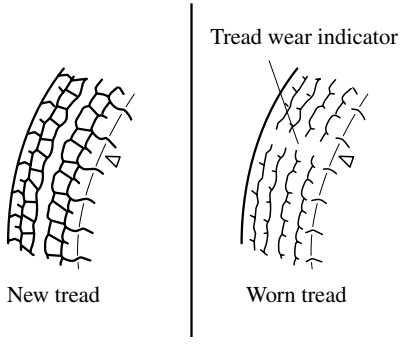

You may need to replace it before the band is across the entire tread.

▼Temporary Spare Tire

Inspect the temporary spare tire at least monthly to make sure it's properly inflated and stored.
The temporary spare tire is easier to handle because of its construction. It is lighter and smaller than a conventional tire and should be used only for an emergency and only for a short distance.

Use the temporary only until the conventional tire is repaired, which should be as soon as possible.

Maintain its pressure at 420 kPa (4.2 kgf/cm^2 or bar, 60 psi).

⚠ CAUTION

- Don't use your temporary spare tire rim with a snow tire or a conventional tire. Neither will properly fit and could damage both tire and rim.
- The temporary spare tire has a tread life of up to 5,000 km (3,000 miles), depending on road conditions and driving habits.
- The temporary spare tire is for limited use, however, if the tread wear solid-band indicator appears, replace the tire with the same type of temporary spare (page 8-25).

▼ Replacing a Wheel

When replacing a wheel, make sure the new one is the same as the original factory wheel in diameter, rim width, and offset.

Proper tire balancing provides the best riding comfort and helps reduce tread wear. Out-of-balance tires can cause vibration and uneven wear, such as cupping and flat spots.

⚠ *WARNING*

Using a Wrong-Sized Wheel:
Using a wrong-sized wheel is dangerous. Braking and handling could be affected, leading to loss of control and an accident. Always use wheels of the correct size on your vehicle.

⚠ CAUTION

A wrong-sized wheel may adversely affect

- Tire fit
- Wheel and bearing life
- Ground clearance
- Snow-chain clearance
- Speedometer calibration
- Headlight aim
- Bumper height

Light Bulbs

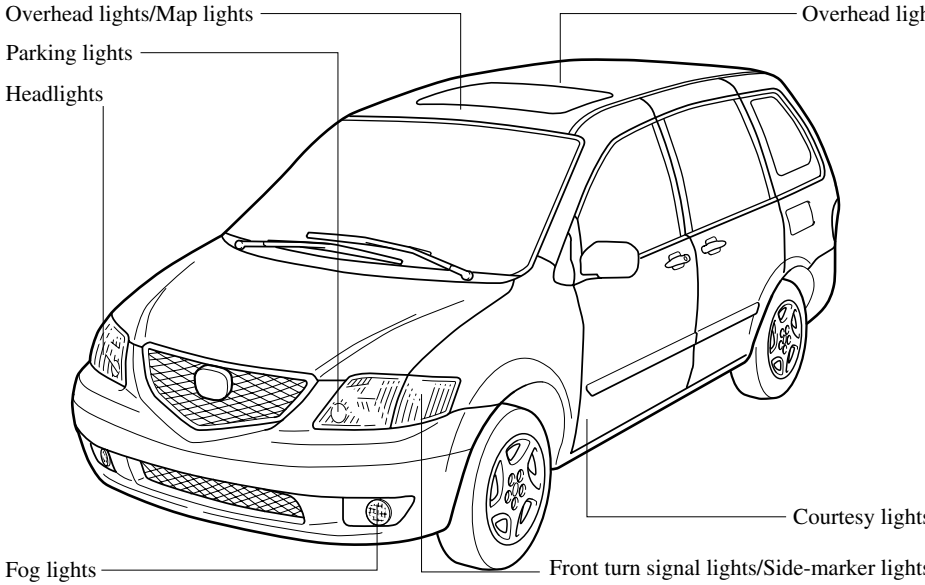
Overhead lights/Map lights
Overhead light
Parking lights
Headlights
Courtesy lights
Fog lights
Front turn signal lights/Side-marker lights

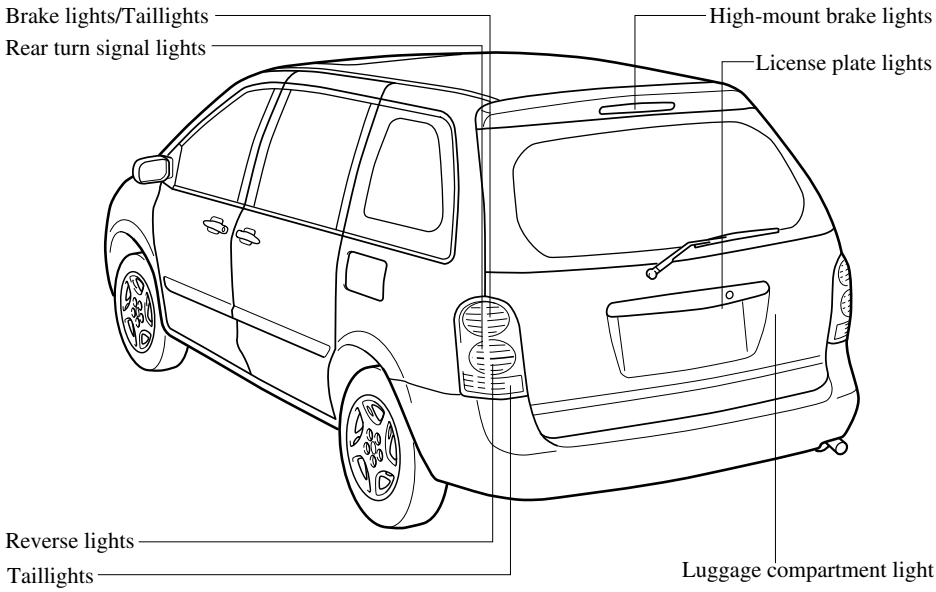
Brake lights/Taillights
High-mount brake lights
Rear turn signal lights
License plate lights
Reverse lights
Taillights
Luggage compartment light

Your Mazda's headlights have replaceable halogen bulbs.

⚠ WARNING

Handling Halogen Bulbs:
When a halogen bulb breaks, it is dangerous. These bulbs contain pressurized gas. If one is broken, it will explode and serious injuries could be caused by the flying glass.
If the glass portion is touched with bare hands, body oil could cause the bulb to overheat and explode when lit. Never touch the glass portion of the bulb with your bare hands and always wear eye protection when handling or working around halogen bulbs.

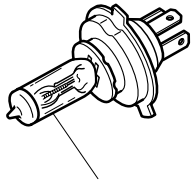

Children and Halogen Bulbs:
Playing with a halogen bulb is dangerous. Serious injuries could be caused by dropping a halogen bulb or breaking it some other way.
Always keep halogen bulbs out of the reach of children.

▼ Replacing a Headlight Bulb

1. Make sure the headlight switch is off.
2. Lift the hood and find the bulb in the rear of the headlight body.
3. Detach the electrical connector from the bulb by squeezing the tabs and pulling it to the rear.

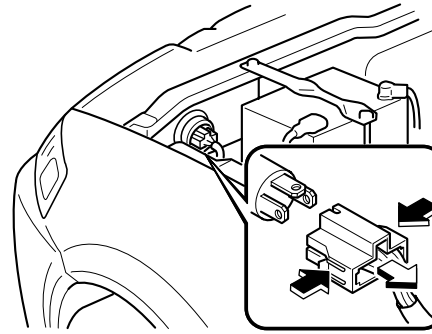

4. Pull off the sealing cover.
5. Unhook the bulb retaining spring.

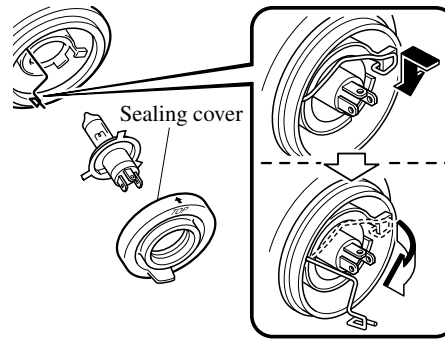

6. Swing the retaining spring out and away to free the headlight bulb.
7. Carefully remove the headlight bulb from the socket by pulling it straight back.
8. Replace the bulb.

9. Install in the reverse order of removal.

NOTE

- When reinstalling the sealing cover, make sure ⇧ faces up.
- Use the protective cover and carton of the replacement bulb to dispose of the old bulb promptly out of the reach of children.

▼Replacing a Bulb (Front)

To replace the parking light bulbs, contact an Authorized Mazda Dealer.

Front turn signal lights/ Side-marker lights

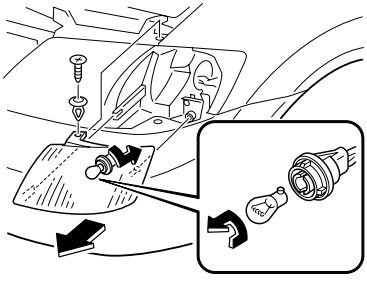

Fog lights

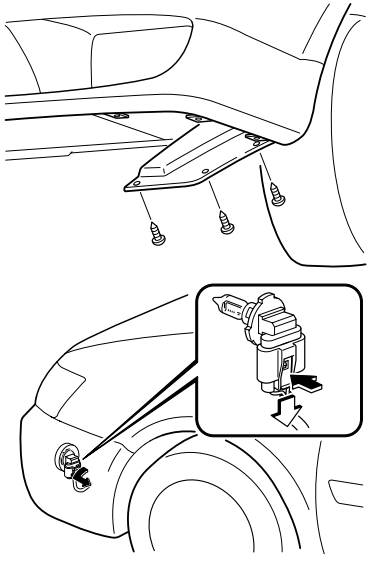

▼Replacing a Bulb (Interior)

Overhead light/Map lights
(Without sunroof, with overhead console)

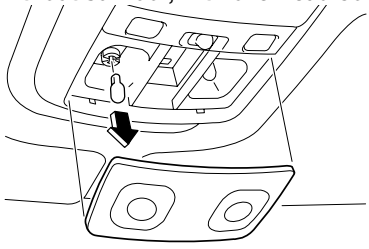

Overhead light/Map lights
(Without either sunroof or overhead console)

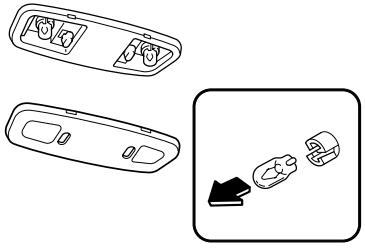

Overhead light/Map lights
(With sunroof)

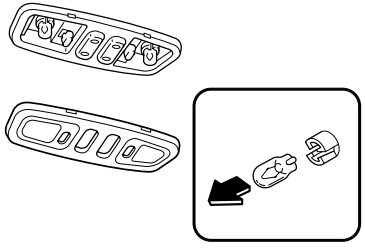

Overhead light

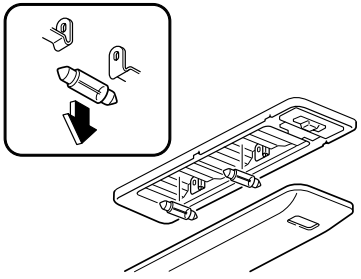

Courtesy lights

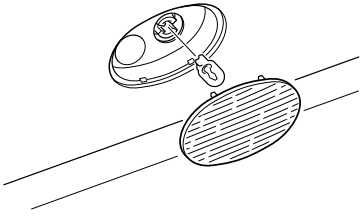

Luggage compartment light

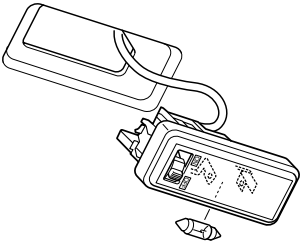

▼Replacing a Bulb (Rear)

① Brake lights/Taillights
② Rear turn signal lights
③ Reverse lights
④ Taillights

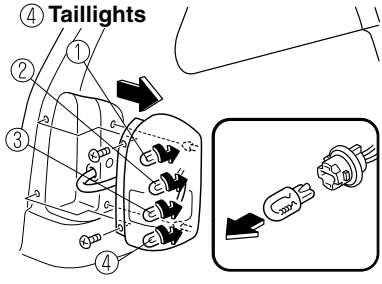

License plate lights

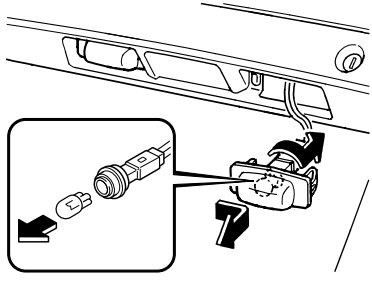

High-mount brake lights

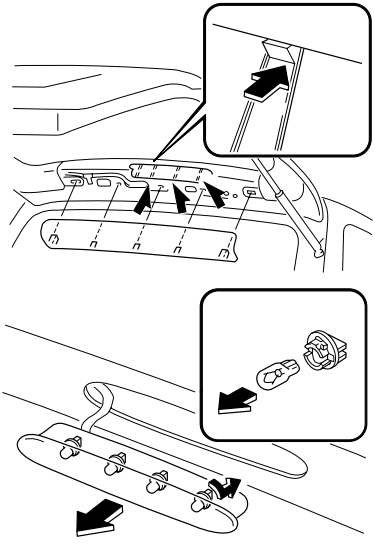

An unsecured high-mount brake lights will allow water to leak into the vehicle. Make sure the high-mount brake light is tightly fastened to the vehicle and if water still leaks, consult an Authorized Mazda Dealer.

Fuses

Your vehicle's electrical system is protected by fuses.

If any lights, accessories, or controls don't work, inspect the appropriate circuit protector. If a fuse has blown, the inside element will be melted.

If the same fuse blows again, avoid using that system and consult an Authorized Mazda Dealer as soon as possible.

▼Fuse Replacement

If the electrical system doesn't work, first inspect fuses on the driver's side.

1. Turn off the ignition switch and other switches.
2. Open the fuse panel cover.

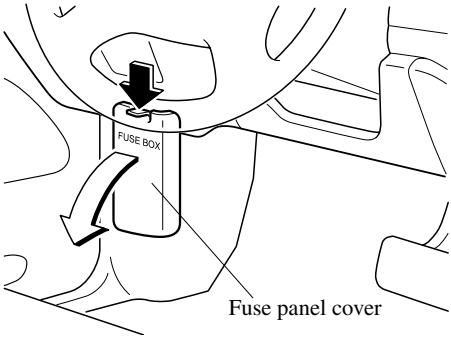

3. Pull the fuse straight out with the fuse puller provided on the fuse panel.

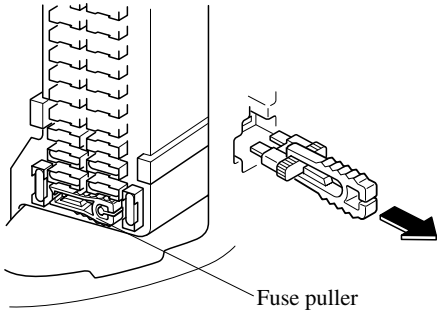

4. Inspect it and replace if it's blown.

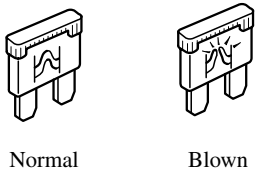

5. Push in a new fuse of the same rating, and make sure it fits tightly. If it doesn't, have an Authorized Mazda Dealer install it.
   If you have no spare fuses, borrow one of the same rating from a circuit not essential to vehicle operation, such as the AUDIO circuit.

⚠CAUTION

Always replace a fuse with one of the same rating. Otherwise you may damage the electric system.

If the headlights or other electrical components don't work and the fuses in the cabin are OK, inspect the fuse block under the hood. If a fuse is blown, it must be replaced. Follow these steps:

1. Turn off the ignition switch and all other switches.
2. Remove the fuse block cover.

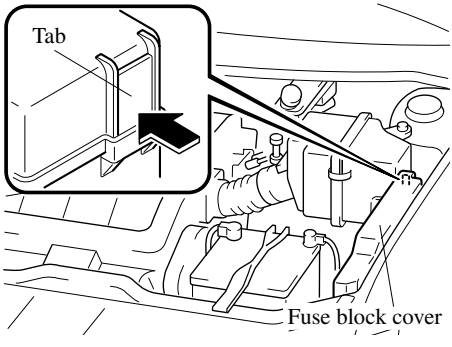

3. If a fuse is blown, replace it with a new one **of the same rating**.

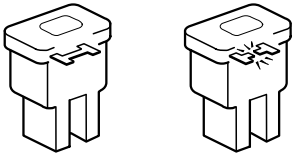

NOTE
To replace the MAIN fuse, contact an Authorized Mazda Dealer (page 8-35).

▼Fuse Panel Description

Fuse block (Engine compartment)

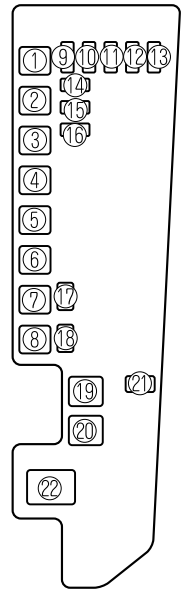

DESCRIPTION		FUSE RATING	PROTECTED COMPONENT
1	DEFOG	40A	Rear window defroster
2	BTN	60A	STOP, HAZARD, ROOM, D.LOCK and DRL fuses
3	ABS	60A	Antilock brake system, For protection of various circuits
4	FAN1	30A	Cooling fan
5	FAN2	30A	Cooling fan
6	HEATER	40A	Heater
7	R.HEAT	30A	Rear heater, For protection of various circuits
8	IG KEY2	40A	A/C, P.WIND, SUN ROOF and R.WIP fuses
9	A/C	10A	Air conditioner, For protection of various circuits

DESCRIPTION		FUSE RATING	PROTECTED COMPONENT
10	TAIL	15A	Taillights
11	A/C PWR	15A	Inverter
12	HORN	15A	Horn
13	FOG	15A	For protection of various circuits
14	EEC	5A	For protection of various circuits
15	HEAD L	15A	Headlight-left
16	HEAD R	15A	Headlight-right
17	HID L	20A	—
18	HID R	20A	—
19	IG KEY1	60A	METER, ENGINE and WIPER fuses
20	EGI INJ	30A	For protection of various circuits
21	FUEL PUMP	20A	Fuel pump
22	MAIN	120A	For protection of all circuits

Fuse block (Driver's side)

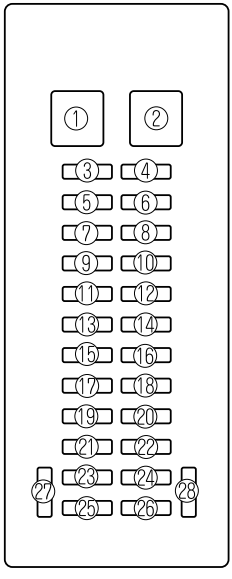

DESCRIPTION		FUSE RATING	PROTECTED COMPONENT
1	P.WIND	30A	Power windows, For protection of various circuits
2	WIPER	20A	Windshield wipers and washer
3	SUN ROOF	15A	Sunroof, For protection of various circuits
4	R.WIP	10A	Rear window wiper and washer
5	SEAT	20A	For protection of various circuits
6	M.DEF	10A	Mirror defroster, For protection of various circuits
7	A/C	10A	Air conditioner, For protection of various circuits
8	DRL	10A	For protection of various circuits
9	—	—	—
10	H/CLEAN	20A	For protection of various circuits
11	—	—	—

DESCRIPTION		FUSE RATING	PROTECTED COMPONENT
12	HAZARD	10A	Hazard warning flashers
13	ROOM	15A	Overhead lights, Map lights, Luggage compartment light
14	AUX POWER	25A	Accessory socket
15	CLOSER LH	20A	For protection of various circuits
16	AUDIO	10A	Audio system, For protection of various circuits
17	D.LOCK	30A	Power door locks, For protection of various circuits
18	P/SEAT	30A	Power seat
19	ENGINE	10A	Engine control system
20	METER	10A	Instrument cluster
21	STOP	15A	Brake lights
22	CLOSER RH	20A	For protection of various circuits

DESCRIPTION		FUSE RATING	PROTECTED COMPONENT
23	ACC. DELAY	30A	Power windows delay, For protection of various circuits
24	METER	15A	Instrument cluster, INH switch
25	ST.SIGN	10A	Starter signal
26	CIGAR	25A	Lighter
27	—	—	—
28	—	—	—

How to Minimize Environmental Paint Damage

The paintwork on your Mazda represents the latest technical developments in composition and methods of application.

Environmental hazards, however, can harm the paint's protective properties, if proper care is not taken.

Here are some examples of possible damage, with tips on how to prevent them.

▼Etching Caused by Acid Rain or Industrial Fallout

Occurrence

Industrial pollutants and vehicle emissions drift into the air and mix with rain or dew to form acids. These acids can settle on a vehicle's finish. As the water evaporates, the acid becomes concentrated and can damage the finish.
And the longer the acid remains on the surface, the greater the chance is for damage.

Prevention

It is necessary to wash and wax your vehicle to preserve its finish according to the instructions in this section. These steps should be taken immediately after you suspect that acid rain has settled on your vehicle's finish.

▼Damage Caused by Bird Dropping, Insects, or Tree Sap

Occurrence

Bird droppings contain acids. If these aren't removed they can eat away the clear and color base coat of the vehicle's paintwork.

When insects stick to the paint surface and decompose, corrosive compounds form. These can erode the clear and color base coat of the vehicle's paintwork if they are not removed.

Tree sap will harden and adhere permanently to the paint finish. If you scratch the sap off while it is hard, some vehicle paint could come off with it.

Prevention

It is necessary to have your Mazda washed and waxed to preserve its finish according to the instructions in this section. This should be done as soon as possible.

Bird droppings can be removed with a soft sponge and water. If you are traveling and these are not available, a moistened tissue may also take care of the problem. The cleaned area should be waxed according to the instructions in this section.
Insects and tree sap are best removed with a soft sponge and water or a commercially available chemical cleaner.

Another method is to cover the affected area with dampened newspaper for one to two hours. After removing the newspaper, rinse off the loosened debris with water.

▼Water Marks

Occurrence

Rain, fog, dew, and even tap water can contain harmful minerals such as salt and lime. If moisture containing these minerals settles on the vehicle and evaporates, the minerals will concentrate and harden to form white rings. The rings can damage your vehicle's finish.

Prevention

It is necessary to wash and wax your vehicle to preserve its finish according to the instructions in this section. These steps should be taken immediately after you find water marks on your vehicle's finish.

▼Paint Chipping

Occurrence

Paint chipping occurs when gravel thrown in the air by another vehicle's tires hits your vehicle.

How to avoid paint chipping

Keeping a safe distance between you and the vehicle ahead reduces the chances of having your paint chipped by flying gravel.

NOTE

- The paint chipping zone varies with the speed of the vehicle. For example, when traveling at 90 km/h (56 mph), the paint chipping zone is 50 m (164 ft).
- In low temperatures a vehicle's finish hardens. This increases the chance of paint chipping.
- Chipped paint can lead to rust forming on your Mazda. Before this happens, repair the damage by using Mazda touch-up paint according to the instructions in this section. Failure to repair the affected area could lead to serious rusting and expensive repairs.

Exterior Care

Follow **all** label and container directions when using a chemical cleaner or polish. Read all warnings and cautions.

▼Maintaining the Finish

Washing

To help protect the finish from rust and deterioration, wash your Mazda thoroughly and frequently, at least once a month, with lukewarm or cold water.

If the vehicle is washed improperly, the paint surface could be scratched. Here are some examples of how scratching could occur.

Scratches occur on the paint surface when:

- The vehicle is washed without first rinsing off dirt and other foreign matter.
- The vehicle is washed with a rough, dry, or dirty cloth.
- The vehicle is washed at a car wash that uses brushes that are dirty or too stiff.
- Cleansers or wax containing abrasives are used.

NOTE

- Mazda is not responsible for scratches caused by automatic car washes or improper washing.
- Scratches are more noticeable on vehicles with darker paint finishes.

To minimize scratches on the vehicle's paint finish:

- Rinse off any dirt or other foreign matter using lukewarm or cold water before washing.
- Use plenty of lukewarm or cold water and a soft cloth when washing the vehicle. Do not use a nylon cloth.
- Rub gently when washing or drying the vehicle.
- Take your vehicle only to a car wash that keeps its brushes well maintained.
- Don't use abrasive cleansers or wax that contain abrasives.

⚠CAUTION

- Don't use steel wool, abrasive cleaners, or strong detergents containing highly alkaline or caustic agents on chrome-plated or anodized aluminum parts. This may damage the protective coating; also, cleaners and detergents may discolor or deteriorate the paint.
- To prevent damaging the antenna, remove it before entering a car wash facility or passing beneath a low overhead clearance.

Pay special attention to removing salt, dirt, mud, and other foreign material from the underside of the wings, and make sure the drain holes in the lower edges of the doors and rocker panels are clean.

Insects, tar, tree sap, bird droppings, industrial fallout, and similar deposits can damage the finish if not removed immediately. When prompt washing with plain water is ineffective, use a mild soap made for use on vehicles.

Thoroughly rinse off all soap with lukewarm or cold water. Don't allow soap to dry on the finish.

After washing the vehicle, dry it with a clean chamois to prevent water spots from forming.

⚠ *WARNING*

Driving with Wet Brakes:
Driving with wet brakes is dangerous. Increased stopping distance or the vehicle pulling to one side when braking could result in a serious accident. Light braking will indicate whether the brakes have been affected. Dry the brakes by driving very slowly and applying the brakes lightly until brake performance is normal.

Waxing

Your vehicle needs to be waxed when water no longer beads on the finish. Always wash and dry the vehicle before waxing it. In addition to the vehicle body, wax the metal trim to maintain its luster.

1. Use wax which contains no abrasives. Waxes containing abrasive will remove paint and could damage bright metal parts.
2. Use a good grade of natural wax for metallic, mica, and solid colors.
3. When waxing, coat evenly with the sponge supplied or a soft cloth.
4. Wipe off the wax with a soft cloth.

NOTE

A spot remover to remove oil, tar, and similar materials will usually also take off the wax. Rewax these areas even if the rest of the vehicle doesn't need it.

▼ Repairing Damage to the Finish

Deep scratches or chips on the finish should be repaired promptly. Exposed metal quickly rusts and can lead to major repairs.

⚠ CAUTION

If your Mazda is damaged and needs metal parts repaired or replaced, make sure the body shop applies anti-corrosion materials to all parts, both repaired and new. This will prevent them from rusting.

▼ Bright-Metal Maintenance

- Use tar remover to remove road tar and insects. Never do this with a knife or similar tool.
- To prevent corrosion on bright-metal surfaces, apply wax or chrome preservative and rub it to a high luster.
- During cold weather or in coastal areas, cover bright-metal parts with a coating of wax or preservative heavier than usual. It would also help to coat them with noncorrosive petroleum jelly or some other protective compound.

⚠ CAUTION

Don't use steel wool, abrasive cleaners, or strong detergents containing highly alkaline or caustic agents on chrome-plated or anodized aluminum parts. This may result in damage to the protective coating and cause discoloration or paint deterioration.

▼ Underbody Maintenance

Road chemicals and salt used for ice and snow removal and solvents used for dust control may collect on the underbody. If not removed, they will speed up rusting and deterioration of such underbody parts as fuel lines, frame, floor pan, and exhaust system, even though these parts may be coated with anti-corrosive material.

Thoroughly flush the underbody and wheel housings with lukewarm or cold water at the end of each winter. Try also to do this every month.

Pay special attention to these areas because they easily hide mud and dirt. **It will do more harm than good to wet down the road grime without removing it.**

The lower edges of doors, rocker panels, and frame members have drain holes that should not be clogged. Water trapped there will cause rusting.

⚠ WARNING

Driving with Wet Brakes:
Driving with wet brakes is dangerous. Increased stopping distance or the vehicle pulling to one side when braking could result in a serious accident. Light braking will indicate whether the brakes have been affected. Dry the brakes by driving very slowly and applying the brakes lightly until brake performance is normal.

▼ Aluminum Wheel Maintenance

A protective coating is provided over the aluminum wheels. Special care is needed to protect this coating.

NOTE

- Don't use a wire brush or any abrasive cleaner, polishing compound, or solvent on aluminum wheels. They may damage the coating.
- Only use a mild soap or neutral detergent and always use a sponge or soft cloth to clean the wheels. Rinse thoroughly with lukewarm or cold water. Also, be sure to clean the wheels after driving on dusty or salted roads. This helps prevent corrosion.
- Avoid washing your vehicle in an automatic car wash that uses high-speed or hard brushes.
- If your aluminum wheels lose luster, wax the wheels.

Interior Care

▼Dashboard Precautions

Prevent caustic solutions such as perfume and cosmetic oils from contacting the dashboard. They'll damage and discolor it. If these solutions get on the dashboard, wipe them off immediately.

⚠CAUTION

Do not use glazing agents.
Glazing agents contain ingredients which may cause discoloration, wrinkling, cracks and peeling.

▼Cleaning the Upholstery and Interior Trim

Vinyl

Remove dust and loose dirt from vinyl with a whisk broom or vacuum cleaner. Clean vinyl with a leather-and-vinyl cleaner.

Leather

Real leather isn't uniform and may have scars, scratches, and wrinkles. Clean it with a leather cleaner or mild soap.

Wipe it with a **damp** soft cloth; then dry and buff it with a **dry** soft cloth.

Fabric

Remove dust and loose dirt from fabric with a whisk broom or vacuum cleaner. Clean it with a mild soap solution good for upholstery and carpets. Remove fresh spots immediately with a fabric spot cleaner.

To keep the fabric looking clean and fresh, take care of it. Otherwise its color will be affected, it can be stained easily, and its fire-resistance may be reduced.

⚠CAUTION

Use only recommended cleaners and procedures. Others may affect appearance and fire-resistance.

▼Cleaning the Lap/Shoulder Belt Webbing

Clean the webbing with a mild soap solution recommended for upholstery or carpets. Follow instructions. Don't bleach or dye the webbing; this may weaken it.

After cleaning the belts, thoroughly dry the belt webbing and make sure there is no remaining moisture before retracting them.

⚠WARNING

Damaged Seat Belt:
Using damaged seat belts is dangerous. In a collision, damaged belts cannot provide adequate protection. Have your Authorized Mazda Dealer replace damaged belts immediately.

▼ Cleaning the Window Interiors

If the windows become covered with an oily, greasy, or waxy film, clean them with glass cleaner. Follow the directions on the container.

⚠ CAUTION

Don’t scrape or scratch the inside of the rear window. You may damage the rear window defroster grid.

9 Customer Information

Important consumer information including warranties and add-on equipment.

Customer Assistance 9- 2
Customer Assistance (U.S.A.) 9- 2
Customer Assistance (Canada) 9- 3
Customer Assistance (Puerto Rico) 9- 6

Mazda Importer/Distributors 9- 7
Importer/Distributor 9- 7
Distributor in Each Area 9- 7

Warranty 9- 8
Warranties for Your Mazda 9- 8
Outside the United States and Canada 9- 9
Registering Your Vehicle in A Foreign Country
(Except United States and Canada) 9-10
Add-On Non-Genuine Parts and Accessories 9-11

Cell Phones 9-12
Cell Phones Warning 9-12

Uniform Tire Quality Grading System (UTQGS) 9-13
Uniform Tire Quality Grading System (UTQGS) 9-13

Reporting Safety Defects 9-15
Reporting Safety Defects 9-15

Service Publications 9-16
Service Publications 9-16

Customer Assistance (U.S.A.)

Your complete and permanent satisfaction is our business. We are here to serve you. All Authorized Mazda Dealers have the knowledge and the tools to keep your Mazda vehicle in top condition.
If you have any questions or recommendations for improvement regarding the service of your Mazda vehicle or servicing by Mazda Dealer personnel, we recommend that you take the following steps:

▼STEP 1: Contact Your Mazda Dealer

Discuss the matter with an Authorized Mazda Dealer. This is the quickest and best way to address the issue. If your concern has not been resolved by the CUSTOMER RELATIONS, SALES, SERVICE, or PARTS MANAGER, then please contact the GENERAL MANAGER of the dealership or the OWNER.

▼STEP 2: Call the Mazda National Customer Assistance Center #800

If for any reason you feel the need for further assistance after contacting your dealership management, call Mazda North American Operations' Customer Assistance Center toll-free at:**1 (800) 222-5500.**

In order to serve you efficiently and effectively, please help us by providing the following information:

1. Your name, address, and telephone number
2. Year and model of vehicle
3. Vehicle Identification Number (17 digits, noted on your registration or title or located on the upper driver's side corner of the dash)
4. Purchase date and current mileage
5. Your dealer's name and location
6. Your question(s)

If you would like to write a letter, please address it to the following, Attn: Customer Assistance, which corresponds with your state:

REGIONAL OFFICE	AREAS COVERED
Mazda North American Operations 7755 Irvine Center Drive Irvine, CA 92618-2922 P.O. Box 19734 Irvine, CA 92623-9734	All states

This way, we can be sure to respond to you as efficiently as possible. That is our goal.
If you live outside the U.S.A., please contact your nearest Mazda Distributor.

Customer Assistance (Canada)

▼Satisfaction Review Process

Your complete and permanent satisfaction is of primary concern to Mazda. All Authorized Mazda Dealers have both the knowledge and tools to keep your Mazda in top condition. In our experience, any questions, problems, or complaints regarding the operation of your Mazda or any other general service transactions are most effectively resolved by your dealer. If the cause of your dissatisfaction cannot adequately be addressed by normal dealership procedures, we recommend that you take the following steps:

▼STEP 1: Contact the Mazda Dealer

Discuss the matter with a member of dealership management. If the Service Manager has already reviewed your concerns, contact the owner of the dealership or its General Manager.

▼STEP 2: Contact the Mazda Regional Office

If you feel that you still require assistance, ask the dealer Service Manager to arrange for you to meet the local Mazda Service Representative. If more expedient, contact Mazda Canada Inc.Regional Office nearest you for such arrangements. Regional Office address and phone numbers are shown (page 9-5).

▼STEP 3: Contact the Mazda Customer Relations Department

If still not substantially satisfied, contact the Customer Relations Department, Mazda Canada Inc., 305 Milner Avenue, Suite 400 Scarborough, Ontario M1B 3V4 Canada
TEL:1 (800) 263-4680.
Provide the Department with the following information:

1. Your name, address and telephone number
2. Year and model of vehicle
3. Vehicle Identification Number (VIN). Refer to the "Vehicle Identification Labels" page of section 10 of this manual for the location of the VIN.
4. Purchase date
5. Present odometer reading
6. Your dealer’s name and location
7. The nature of your problem and/or cause of dissatisfaction

The Department, in cooperation with the local Mazda Service Representative, will review the case to determine if everything possible has been done to ensure your satisfaction.

Customer Assistance

Please recognize that the resolution of service problems in most cases requires the use of your Mazda dealer's service facilities, personnel and equipment. We urge you to follow the above three steps in sequence therefore for most effective results.

▼ Mediation/Arbitration Program

Occasionally a customer concern cannot be resolved through Mazda's Customer Satisfaction Program. If after exhausting the procedures in this manual your concern is still not resolved, you have another option.

Mazda Canada Inc. participates in an arbitration program administered by the Canadian Motor Vehicle Arbitration Plan (CAMVAP). CAMVAP will advise you about how your concern may be reviewed and resolved by an independent third party through binding arbitration.

Your complete satisfaction is the goal of Mazda Canada Inc. and our dealers. Mazda's participation in CAMVAP makes a valuable contribution to our achieving that goal. There is no charge for using CAMVAP. CAMVAP results are fast, fair and final as the award is binding on both you and Mazda Canada Inc.

▼ Canadian Motor Vehicle Arbitration Plan (CAMVAP)

If a specific item of concern arises, where a solution cannot be reached between an owner, Mazda, and/or one of it's dealers (that all parties cannot agree upon), the owner may wish to use the services offered by the Canadian Motor Vehicle Arbitration Plan (CAMVAP).

CAMVAP uses the services of Provincial Administrators to assist consumers in scheduling and preparing for their arbitration hearings. However, before you can proceed with CAMVAP you must follow your Mazda dispute resolution process as outlined previously.

CAMVAP is fully implemented in all provinces and territories.
Consumers wishing to obtain further information about the Program can obtain an information booklet from your dealer, the Provincial Administrator or the Canadian Motor Vehicle Arbitration Plan Office at the following address or telephone number.

Canadian Motor Vehicle Arbitration Office
235 Yorkland Boulevard, suite 300
North York, Ontario
M2J 4Y8
1 (800) 207-0685

Customer Assistance

Provincial Administrators may be reached locally as listed below:

Province/Territory	CAMVAP Number
British Columbia & Yukon Territories	(604) 681-0312
Alberta & Northwest Territories	(403) 426-0650
Saskatchewan	(306) 352-9259
Manitoba	(204) 942-7166
Ontario	(416) 596-8824
Atlantic Canada	(902) 422-5413
Quebec	(418) 649-1330

▼Regional Offices

REGIONAL OFFICES	AREAS COVERED
MAZDA CANADA INC. WESTERN REGION 8171 ACKROYD ROAD SUITE 2000 RICHMOND B.C. V6X 3K1 (604) 303-5670	ALBERTA, BRITISH COLUMBIA, MANITOBA, SASKATCHEWAN, YUKON
MAZDA CANADA INC. CENTRAL/ATLANTIC REGION 305 MILNER AVENUE SUITE 400 SCARBOROUGH, ONTARIO M1B 3V4 1 (800) 263-4680	ONTARIO, NEW BRUNSWICK, NOVA SCOTIA, PRINCE EDWARD ISLAND, NEWFOUNDLAND
MAZDA CANADA INC. QUEBEC REGION 6111 ROUTE TRANS CANADIENNE POINTE CLAIRE, QUEBEC H9R 5A5 (514) 694-6390	QUEBEC

Customer Assistance (Puerto Rico)

Your complete and permanent satisfaction is our business. That is why all Authorized Mazda Dealers have the knowledge and the tools to keep your Mazda vehicle in top condition.
If you have any questions or recommendations for improvement regarding the service of your Mazda vehicle or servicing by Mazda Dealer personnel, we recommend that you take the following steps:

▼STEP 1

Discuss the matter with an Authorized Mazda Dealer. This is the quickest and best way to address the issue. If your concern has not been resolved by the CUSTOMER RELATIONS, SALES, SERVICE, or PARTS MANAGER, then please contact the GENERAL MANAGER of the dealership or the OWNER.

▼STEP 2

If, after following STEP 1, you feel the need for further assistance, please contact your area's Mazda representative (Indicated on the next page).

Please help us by providing the following information:

1. Your name, address, and telephone number
2. Year and model of vehicle
3. Vehicle Identification Number (17 digits, noted on your registration or title or located on the upper driver's side corner of the dash)
4. Purchase date and current mileage
5. Your dealer's name and location
6. Your question(s)

Mazda Importer/Distributors

Importer/Distributor

▼U.S.A.

Mazda North American Operations
7755 Irvine Center Drive
Irvine, CA 92618-2922 U.S.A.
P.O. Box 19734
Irvine, CA 92623-9734 U.S.A.
TEL:1 (800) 222-5500 (in U.S.A.)
(949) 727-1990 (outside U.S.A.)

Distributor in Each Area

▼CANADA

Mazda Canada Inc.
305 Milner Avenue, Suite 400
Scarborough, Ontario M1B 3V4 Canada
TEL:1 (800) 263-4680 (in Canada)
(416) 609-9909 (outside Canada)

▼PUERTO RICO

Plaza Motors Corp. (Mazda de Puerto Rico)
P.O. Box 362722, San Juan, Puerto Rico 00936-2722
TEL: (787) 788-9300

▼GUAM

Triple J Motors
157 South Marine Drive, Tamuning, GUAM 96911 USA
P.O. Box 6066 Tamuning, Guam 96931
TEL: (671) 649-6555

▼SAIPAN

Pacific International Marianas, Inc. (d.b.a. Midway Motors)
P.O. Box 887 Saipan, MP 96950
TEL: (670) 234-7524

Triple J Saipan, Inc. (d.b.a. Triple J Motors)
P.O. Box 500487 Saipan, MP 96950-0487
TEL: (670) 234-7133/3051

▼AMERICAN SAMOA

Polynesia Motors, Inc.
P.O. Box 1120, Pago Pago, American Samoa 96799
TEL: (684) 699-9347

Warranties for Your Mazda

- New Vehicle Limited Warranty
- Distributor Major Component Limited Warranty (Canada only)
- Safety Restraint System Limited Warranty
- Anti-perforation Limited Warranty
- Federal Emission Control Warranty (U.S.A. only)
  - Emission Defect Warranty
  - Emission Performance Warranty
- California Emission Control Warranty (U.S.A. only)
- Emission Control Warranty (Canada only)
- Replacement Parts and Accessories Limited Warranty
- Tire Warranty

NOTE
Detailed warranty information is provided with your Mazda.

Outside the United States and Canada

Government regulations in the United States and Canada require that automobiles meet specific emission regulations and safety standards. Therefore, vehicles built for use in the United States, its territories, and Canada may differ from those sold in other countries.

The differences may make it difficult or even impossible for your vehicle to receive satisfactory servicing in other countries. We strongly recommend that you NOT take your Mazda outside these areas.
You may have these problems if you do:

- Recommended fuel may be unavailable. Any kind of leaded fuel or low-octane fuel will affect vehicle performance and damage the emission controls and engine.
- Proper repair facilities, tools, testing equipment, and replacement parts may not be available.

The Mazda warranty applies only to Mazda vehicles registered and normally operated in the United States, its territories, and Canada.

Registering Your Vehicle in A Foreign Country (Except United States and Canada)

Government regulations in your country could require that automobiles meet specific emission and safety standards.
Vehicles built for your country may differ from those built for other countries. In addition to registration problems, satisfactory service may be difficult or even impossible in another country.

The fuel specified for your vehicle may be unavailable.

Parts, servicing techniques, and tools necessary to maintain and repair your vehicle may be unavailable.

There might not be an Authorized Mazda Dealer in the country you plan to take your vehicle.

The Mazda warranty is valid only in certain countries.

Add-On Non-Genuine Parts and Accessories

Non-genuine parts and accessories for Mazda vehicles can be found in stores.
These may fit your vehicle, but they are not approved by Mazda for use with Mazda vehicles. When you install non-genuine parts or accessories, they could affect your vehicle's performance or safety system; the Mazda warranty doesn't cover this. Before you install any non-genuine parts or accessories, consult an Authorized Mazda Dealer.

⚠ *WARNING*

Installation of Non-Genuine Parts or Accessories:
Installation of non-genuine parts or accessories is dangerous. Improperly designed parts or accessories could seriously affect your vehicle's performance or safety system. This could cause you to have an accident or increase your chances of injuries in an accident. Always consult an Authorized Mazda Dealer before you install non-genuine parts or accessories.

Add-On Electrical and Electronic Equipment:
Incorrectly choosing or installing improper add-on equipment or choosing an improper installer is dangerous. Essential systems could damaged, causing engine stalling, air-bag (SRS) activation, ABS inactivation, or a fire in the vehicle.
Be very careful in choosing and installing add-on electrical equipment, such as mobile telephones, two-way radios, stereo systems, and car alarm systems.

Mazda assumes no responsibility for death, injury, or expenses that may result from the installation of add-on non-genuine parts or accessories.

Cell Phones Warning

⚠ *WARNING*

Use of Cell Phones and Other Devices by Driver:
Although not Mazda products, use of any electrical devices such as cell phones, computers, portable radios, vehicle navigation or other devices by the driver while the vehicle is moving is dangerous. Dialing a number on a cell phone while driving also ties-up the driver's hands. Use of these devices will cause the driver to be distracted and could lead to a serious accident. If a passenger is unable to use the device, pull off the right-of-way to a safe area before use. If use of a cell phone is necessary despite this warning, use a hands-free system to at least leave the hands free to drive the vehicle. Never use a cell phone or other electrical device while the vehicle is moving and, instead, concentrate on the full-time job of driving.
Please comply to the legal regulations concerning the use of communication equipment in vehicles in your country.

Uniform Tire Quality Grading System (UTQGS)

This information relates to the tire grading system developed by the U.S. National Highway Traffic Safety Administration for grading tires by tread wear, traction, and temperature performance.

▼Tread Wear

The tread wear grade is a comparative rating based on the wear rate of the tire when tested under controlled conditions on a specified government test course.
For example, a tire graded 150 would wear one-and-a-half times as well on the government course as a tire graded 100.

The relative performance of tires depends upon the actual conditions of their use, however, and may depart significantly from the norm because of variations in driving habits, service practices and differences in road characteristics and climate.

▼Traction-AA, A, B, C

The traction grades, from highest to lowest, are AA, A, B, and C. These grades represent the tire's ability to stop on wet pavement as measured under controlled conditions on specified government test surfaces of asphalt and concrete. A tire marked C may have poor traction performance.

⚠ *WARNING*

The traction grade assigned to this tire is based on braking (straight ahead) traction tests and does not include acceleration cornering (turning), hydroplaning, or peak traction characteristics.

▼Temperature-A, B, C

The temperature grades are A (the highest), B, and C, represent the tire's resistance to the generation of heat and its ability to dissipate heat when tested under controlled conditions on a specified indoor laboratory test wheel.
Sustained high temperature can cause the material of the tire to degenerate and reduce tire life, and excessive temperatures can lead to sudden tire failure.

Grade C corresponds to a level of performance which all passenger vehicle tires must meet under the Federal Motor Vehicle Safety Standard No. 109. Grades B and A represent higher levels of performance on the laboratory test wheel than the minimum required by law.

Uniform Tire Quality Grading System (UTQGS)

⚠ *WARNING*

The temperature grade for this tire is established for a tire that is properly inflated and not overloaded. Excessive speed, underinflation, or excessive loading, either separately or in combination, can cause heat buildup and possible tire failure.

These grades will be added to the sidewalls of passenger vehicle tires over the next several years according to a schedule established by the NHTSA and the tire manufacturers.

The grade of tires available as standard or optional equipment on Mazda vehicle may vary with respect to grade.

ALL PASSENGER VEHICLE TIRES MUST CONFORM TO THESE GRADES AND TO ALL OTHER FEDERAL TIRE-SAFETY REQUIREMENTS.

▼Uniform Tire Quality Grading

Quality grades can be found where applicable on the tire sidewall between tread shoulder and maximum section width.
For example:
Treadwear 200 Traction AA Temperature A

UTQGS MARK (example)

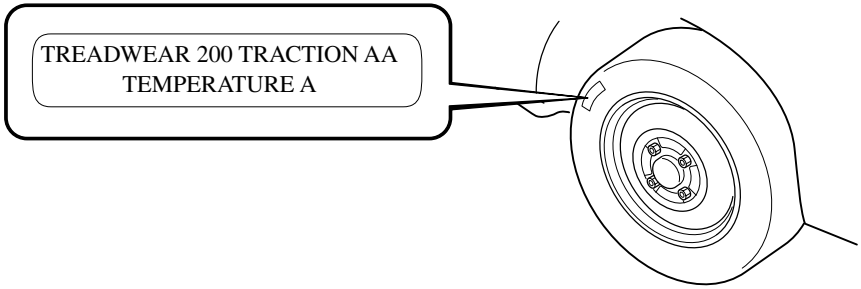

Reporting Safety Defects

If you believe that your vehicle has a defect which could cause a crash or could cause injury or death, you should immediately inform the National Highway Traffic Safety Administration (NHTSA) in addition to notifying Mazda Motor Corporation (Your Mazda Importer/Distributor).

If NHTSA receives similar complaints, it may open an investigation, and if it finds that a safety defect exists in a group of vehicles, it may order a recall and remedy campaign. However, NHTSA cannot become involved in individual problems between you, your dealer, or Mazda Motor Corporation (Your Mazda Importer/Distributor).

To contact NHTSA, you may either call the Auto Safety Hotline toll-free at 1 (800) 424-9393 (or 366-0123 in Washington, D.C. area) or write to: NHTSA, U.S. Department of Transportation. Washington, D.C. 20590. You can also obtain other information about motor vehicle safety from the Hotline.

NOTE

If you live in the U.S.A., all correspondence to Mazda Motor Corporation should be forwarded to:

Mazda North American Operations
7755, Irvine Center Drive
Irvine, California 92618-2922
P.O. Box 19734
Irvine, CA 92623-9734
Customer Assistance Center or toll free at 1 (800) 222-5500

If you live outside of the U.S.A., please contact the nearest Mazda Distributor shown (page 9-7) in this booklet.

Service Publications

Factory-authorized Mazda service publications are available for owners who wish to do some of their own maintenance and repair.

When requesting any of our publications through an Authorized Mazda Dealer, refer to the chart below.

If they don't have what you need in stock, they can order it for you.

PUBLICATION ORDER NUMBER	PUBLICATION DESCRIPTION
9999-95-038B-03	2003 WORKSHOP MANUAL (English)
9999-95-024G-03	2003 WIRING DIAGRAM (English)
9999-95-029C-03 (U.S.A. only)	2003 OWNER'S MANUAL
9999-EC-029C-03 (Canada only)	2003 OWNER'S MANUAL
9999-PR-029C-03 (Puerto Rico only)	2003 OWNER'S MANUAL

▼WORKSHOP MANUAL:

Covers recommended maintenance and repair procedures of the drive train, body and chassis.

▼WIRING DIAGRAM:

Provides electrical schematics as well as component location for the entire electrical system.

▼OWNER'S MANUAL:

This booklet contains information regarding the proper care and operation of your vehicle. This is not a technician's manual.

10 Specifications

Technical information about your Mazda.

Identification Numbers 10- 2
Vehicle Information Labels 10- 2

Specifications 10- 4
Specifications 10- 4

Vehicle Information Labels

▼Vehicle Identification Number

The vehicle identification number legally identifies your vehicle. The number is on a plate attached to the left top side of the dashboard. This plate can easily be seen through the windshield.

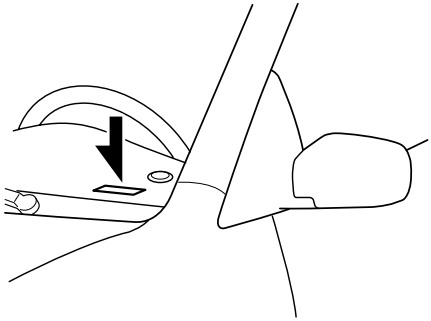

▼Motor Vehicle Safety Standard Label

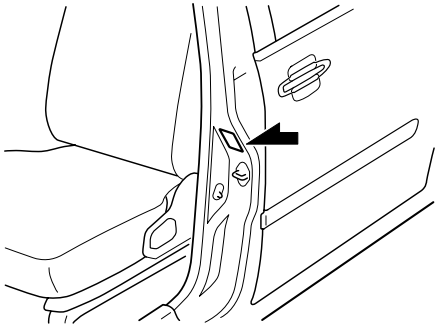

▼Chassis Number

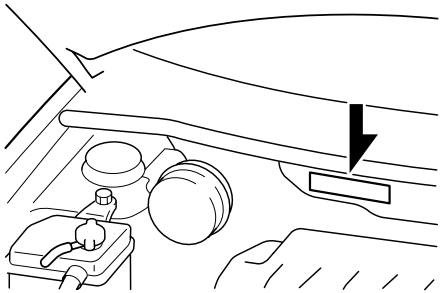

▼Vehicle Emission Control Information Label

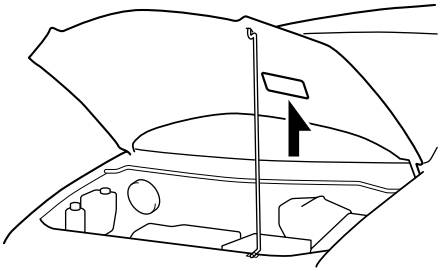

▼Tire Pressure Label

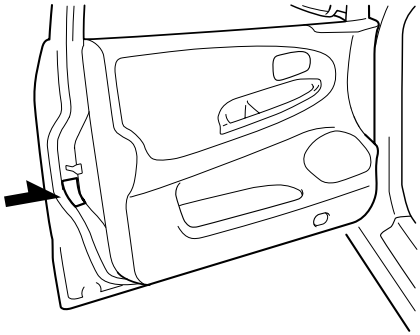

▼Engine Number

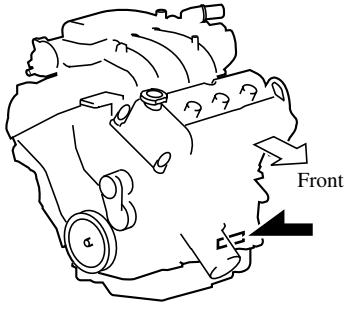

Specifications

▼Engine

Item	Classification
Type	DOHC-24V 60°V, 6-cylinder
Bore × Stroke	89.0 × 79.5 mm (3.50 × 3.13 in)
Displacement	2,967 ml (2,967 cc, 181.0 cu in)
Compression ratio	10.0

▼Electrical System

Item	Classification
Battery	12V-48AH/5HR MF
	12V-55AH/5HR MF
Alternator	12 V - 110 A
Starter	12 V - 1.4 kW
Spark-plug number	AGSF 32WM
Spark-plug gap	1.32—1.42 mm (0.051—0.057 in)

▼Lubricant Quality

Lubricant	Classification	
	API Service	ILSAC
Engine oil*	SL	GF-III

* Refer to the recommended SAE viscosity numbers on page 8-9.

Lubricant	Classification
Automatic transaxle fluid	ATF M-III or equivalent (e.g. Dexron® III)
Power steering fluid	ATF M-III or equivalent (e.g. Dexron® III)
Brake fluid	SAE J1703, or FMVSS116 DOT-3

▼Capacities

(Approximate Quantities)

Item		Unit		
		L	US qt	Imp qt
Engine oil	With oil filter replacement	5.2	5.5	4.6
	Without oil filter replacement	4.7	5.0	4.1
Coolant	With rear heater	12.0	12.7	10.6
	Without rear heater	10.2	10.8	9.3
Automatic transaxle fluid		9.7	10.3	8.5
Washer fluid	With 4-Seasons package	5.5	5.8	4.8
	Without 4-Seasons package	2.2	2.3	1.9
Fuel tank		75	19.8 (US gal)	16.5 (Imp gal)

Check oil and fluid levels with dipsticks or reservoir gauges.

▼Dimensions

Item		Model
Overall length	Without GFX Package	4,769 mm (187.8 in), 4,794 mm (188.7 in)*1
	With GFX Package	4,786 mm (188.4 in), 4,810 mm (189.4 in)*1
Overall width		1,830 mm (72.1 in)
Overall height		1,745 mm (68.7 in), 1,755 mm (69.1 in)*2
Front tread		1,540 mm (60.6 in)
Rear tread		1,545 mm (60.8 in)
Wheelbase		2,840 mm (111.8 in)

*1 With license plate holder
*2 17 inch wheel vehicle

▼Weights

Item		Weight
GVWR (Gross Vehicle Weight Rating)		2,372 kg (5,229 lb)
GAWR (Gross Axle Weight Rating)	Front	1,180 kg (2,601 lb)
	Rear	1,214 kg (2,676 lb)

▼Air Conditioner

Refrigerant complies with SAE J639	Maximum operating charge	
HFC134a (R-134a)	Front air-conditioner	0.65 kg (22.9 oz)
	Front and rear air-conditioner	0.85 kg (30.0 oz)

▼Light Bulbs

Light bulb	Wattage
Headlights	60/55
Front turn signal lights/Side-marker lights	21/5
Fog lights	55
Parking lights	5
Rear turn signal lights	21
Brake lights/Taillights	21/5
Taillights	5
High-mount brake light	5
Reverse lights	18
License plate lights	5
Overhead lights/Map lights	5
Overhead light	8
Liftgate light	8
Courtesy lights	5

▼Tires

Check the tire pressure label for tire size and inflation pressure. Refer to Tire Inflation Pressure on page 8-23.

Standard tire

Item	Model		
Tire size	205/65R15 94H	215/60R16 95H	P215/60R17 95H
Rim size	15×6JJ	16×6-1/2JJ	17×7JJ
Inflation pressure	240 kPa (35 psi or lb/po^2)	240 kPa (35 psi or lb/po^2)	240 kPa (35 psi or lb/po^2)

Temporary spare tire

Tire size	Inflation pressure
T135/90D15	420 kPa (60 psi)

▼Fuses

Refer to the fuse rating on page 8-33.

11 Index

A

Accessory Sockets 6-52
Add-On Non-Genuine Parts and Accessories 9-11
Air Bag Systems 2-50
Air Filter 8-17
Antenna 6-14
Anti-Lock Brake System (ABS) 5-7
    Warning light 5-7
Appearance Care 8-38
Ashtray 6-44
Audio System 6-14
    Audio control switch 6-38
    Audio set 6-21
    Operating tips for audio system 6-14
    Safety certification 6-40
Automatic Transaxle
    Driving tips 5-11
    Fluid 8-15
    Overdrive 5-11
    Shift-lock override 5-10
    Shift-lock system 5-10
    Transaxle ranges 5-9

B

Battery
    Emergency starting 7-17
    Maintenance 8-22
    Specifications 10-4
Beeps
    Ignition key reminder 5-31
    Lights-on reminder 5-31
    Power sliding door buzzer 5-31
    Seat belt warning beep 5-31
Before Starting the Engine 4-6
    After getting in 4-6
    Before getting in 4-6

B

Body Lubrication 8-17
Bottle Holder 6-48
Brake
    Fluid 8-13
Brakes
    Anti-lock brake system (ABS) 5-7
    Foot brake 5-4
    Pad wear indicator 5-8
    Parking brake 5-5
    Warning light 5-5
Break-In Period 4-7
Bulb Replacement 8-27

C

Capacities 10-5
Carbon Monoxide 4-5
Cargo Securing Loops 6-51
Catalytic Converter 4-3
Cell Phones 9-12
Child Restraint
    Child restraint precautions 2-37
    Installing child-restraint systems 2-40
    LATCH child-restraint systems 2-47
Child Safety Locks for Rear Door 3-11
Cigarette Lighter 6-44
Climate Control System 6-2
    Gas specifications 10-5
Courtesy Lights 6-43
Cruise Control 5-13
Cup Holder 6-46
Customer Assistance 9-2

D

Dashboard Illumination 5-22
Daytime Running Lights 5-33
Defroster
Rear window 5-36
Dimensions 10-5
Door Locks 3-8
Driving In Flooded Area 4-10
Driving Tips 4-7
Automatic transaxle 5-11
Break-in period 4-7
Driving in flooded area 4-10
Hazardous driving 4-8
Money-saving suggestions 4-7
Rocking the vehicle 4-8
Winter driving 4-9

E

Easy Closure 3-12
Emergency Starting 7-17
Flooded engine 7-17
Jump-starting 7-17
Push-starting 7-19
Emergency Towing 7-20
Emission Control System 4-3
Engine
Coolant 8-11
Exhaust gas 4-5
Hood release 3-24
Oil 8-9
Overheating 7-15
Starting 5-3
Engine Compartment Overview 8-8
Engine Coolant
Overheating 7-15
Engine Coolant Temperature
Gauge 5-21
Exhaust Gas 4-5

E

Exterior Care 8-40
Eyeglass Holder 6-49

F

Flasher
Hazard warning 5-37
Headlights 5-32
Flat Tire 7-3
Changing 7-8
Spare tire and tool storage 7-3
Fluids
Classification 10-4
Owner maintenance 8-6
Fog Lights 5-34
Foot Brake 5-4
Front Console 6-49
Front seats 2-3
Fuel
Filler lid and cap 3-22
Gauge 5-22
Requirements 4-2
Tank capacity 10-5
Fuses 8-33
Panel description 8-35
Replacement 8-33

G

Gauges 5-19
Glove Box 6-49

H

Hazard Warning Flasher 5-37
Hazardous Driving 4-8
Headlights
    Control 5-32
    Flashing 5-32
    High-low beam 5-32
    On reminder 5-32
Hood Release 3-24
Horn 5-37

I

Ignition
    Keys 3-2
    Switch 5-2
Illuminated Entry System 6-41
Immobilizer System 3-27
Indicator Lights 5-23
    Cruise set 5-30
    Headlight high-beam 5-29
    O/D OFF 5-29
    Security 5-29
    Shift position 5-30
    TCS 5-30
    TCS OFF 5-30
Instrument Cluster 5-19
Interior Care 8-43
Interior Lights 6-41

J

Jump-Starting 7-17

K

Keyless Entry System 3-3
Keys 3-2

L

Label Information 10-2
Lane-Change Signals 5-33
Liftgate 3-18
Light Bulbs
    Replacement 8-27
    Specifications 10-6
Lighter 6-44
Lighting Control 5-32
Lubricant Quality 10-4
Luggage Compartment Light 6-43

M

Maintenance
    Introduction 8-2
    Owner maintenance
    precautions 8-7
    Owner maintenance schedule 8-6
    Scheduled 8-3
Map Lights 6-43
Meters and Gauges 5-19
Mirrors
    Outside mirrors 3-31
    Rearview mirror 3-32
Money-Saving Suggestions 4-7

O

Odometer and Trip Meter 5-20
Outside Mirrors 3-31
Overhead Console 6-48
Overhead Lights 6-42
Overheating 7-15
Overloading 4-11

P

Paint Damage 8-38
Parking Brake 5-5
Parking in an Emergency 7-2
Power Door Locks 3-10
Power Sliding Doors 3-12
Power Steering 5-12
    Fluid 8-14
Power Windows 3-19
Push-Starting 7-19

R

Rear Console 6-50
Rear Door Child Safety Locks 3-11
Rear Quarter Windows 3-22
Rear Window Defroster 5-36
Rear Window Washer 5-36
Rear Window Wiper 5-36
Rearview Mirror 3-32
Recreational Towing 7-21
Registering Your Vehicle in A
Foreign Country 9-10
Rocking the Vehicle 4-8

S

Safety Defects, Reporting 9-15
Seat Belt System
    2-point type 2-33
    3-point type 2-29
    Automatic locking 2-28
    Emergency locking 2-27
    Extender 2-35
    Pregnant women 2-27
    Pretensioner and load limiting ..2-31
    Seat belt precautions 2-26
    Warning beep 2-36
    Warning light 2-36

S

Seats
    Flat folding 2-24
    Front seat 2-3
    Second-row seats 2-9
    Third-Row Seat 2-17
Second-row seats 2-9
Security System
    Immobilizer system 3-27
    Theft-deterrent system 3-29
Service Publications 9-16
Shopping Bag Hooks 6-51
Spare Tire and Tool Storage 7-3
Specifications 10-4
Speedometer 5-20
SRS Air Bags
    Air bag system description 2-54
    Supplemental restraint systems
    precautions 2-50
    Warning light 2-59
Starting the Engine 5-3
Steering Wheel 3-31
    Horn 5-37
Storage Box 6-50
Storage Compartments 6-48
    Cargo securing loops 6-51
    Eyeglass holder 6-49
    Front console 6-49
    Glove box 6-49
    Overhead console 6-48
    Rear console 6-50
    Shopping bag hooks 6-51
    Storage box 6-50
    Under seat tray 6-50
Sunroof 3-25
Sunshade 3-26
Sunvisors 6-41

T

Tachometer 5-21
Temporary Spare Tire 8-25
Theft-Deterrent System 3-29
Third-row seat 2-17
Tiedown
    Hook 7-21
Tires
    Flat tire 7-3
    Inflation pressure 8-23
    Replacement 8-25
    Rotation 8-24
    Snow tires 4-9
    Spare tire and tool storage 7-3
    Specifications 10-6
    Tire chains 4-10
    Uniform tire quality grading system (UTQGS) 9-13
Tool 7-3
Towing
    Description 7-20
    Emergency towing 7-20
    Recreational towing 7-21
    Trailer towing 4-12
Traction Control System (TCS) 5-16
    TCS indicator light 5-17
    TCS OFF indicator light 5-17
    TCS OFF switch 5-17
Trailer Towing 4-12
Trip Meter 5-20
Turn and Lane-Change Signals 5-33

U

Under Seat Tray 6-50

V

Vanity Mirrors 6-41
Vehicle Information Labels 10-2

W

Warning Lights 5-23
    ABS 5-27
    Air bag system 5-28
    Brake system 5-25
    Charging system 5-26
    Check engine 5-27
    Door-ajar 5-29
    Engine oil pressure 5-26
    Front seat belt pretensioner system 5-28
    Immobilizer system 5-29
    Low fuel 5-28
    Seat belt 5-28
Warranty 9-8
Washer Fluid 8-16
Weights 10-5
Wheel Replacement 8-26
Windows
    Power windows 3-19
    Rear quarter windows 3-22
Windshield Washer 5-35
Windshield Wipers 5-35
    Blades replacement 8-18
Winter Driving 4-9