Zoom-Zoom

All children instinctively know it.

A few adults still remember it.

One unique car company refuses to outgrow it.

In grown-up language, it means the exhilaration and

liberation that come from experiencing sheer motion.

But as usual, children put it much better and simply call it " Go Zoom-Zoom."

We practice it every day.

It's why we build the kind of cars we do.

Zoom-Zoom.

Can we re-awaken it in you today?

A Word to Mazda Owners

Thank you for choosing a Mazda. We at Mazda design and build vehicles with complete customer satisfaction in mind.

To help ensure enjoyable and trouble-free operation of your Mazda, read this manual carefully and follow its recommendations.

An Authorized Mazda Dealer knows your vehicle best. So when maintenance or service is necessary, that's the place to go.

Our nationwide network of Mazda professionals is dedicated to providing you with the best possible service.

We assure you that all of us at Mazda have an ongoing interest in your motoring pleasure and in your full satisfaction with your Mazda product.

Mazda Motor Corporation
HIROSHIMA, JAPAN

Important Notes About This Manual
Keep this manual in the glove box as a handy reference for the safe and enjoyable use of your Mazda. Should you resell the vehicle, leave this manual with it for the next owner.

All specifications and descriptions are accurate at the time of printing. Because improvement is a constant goal at Mazda, we reserve the right to make changes in specifications at any time without notice and without obligation.

Event Data Recorder
This vehicle is equipped with an event data recorder. In the event of a crash, this device records data related to vehicle dynamics and safety systems for a short period of time. These data can help provide a better understanding of the circumstances in which crashes and injuries occur and lead to the designing of safer vehicles.

Air Conditioning and the Environment
Your Mazda's genuine air conditioner is filled with HFC134a (R134a), a refrigerant that has been found not to damage the earth's ozone layer. If the air conditioner does not operate properly, consult an Authorized Mazda Dealer.

Perchlorate
Certain components of this vehicle such as [air bag modules, seat belt pretensioners, lithium batteries, ...] may contain Perchlorate Material– Special handling may apply for service or vehicle end of life disposal. See www.dtsc.ca.gov/hazardouswaste/perchlorate.

Please be aware that this manual applies to all models, equipment and options. As a result, you may find some explanations for equipment not installed on your vehicle.

©2007 Mazda Motor Corporation
Printed in Japan July 2007(Print2)

How to Use This Manual

We want to help you get the most driving pleasure from your vehicle. Your owner's manual, when read from cover to cover, can do that in many ways.

Illustrations complement the words of the manual to best explain how to enjoy your Mazda. By reading your manual, you can find out about the features, important safety information, and driving under various road conditions.

The symbol below in this manual means “Do not do this” or “Do not let this happen”.

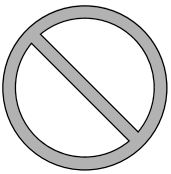

Index: A good place to start is the Index, an alphabetical listing of all information in your manual.

You'll find several WARNINGs, CAUTIONs, and NOTEs in the manual.

⚠ WARNING

A WARNING indicates a situation in which serious injury or death could result if the warning is ignored.

⚠ CAUTION

A CAUTION indicates a situation in which bodily injury or damage to your vehicle, or both, could result if the caution is ignored.

NOTE

A NOTE provides information and sometimes suggests how to make better use of your vehicle.

The symbol below, located on some parts of the vehicle, indicates that this manual contains information related to the part. Please refer to the manual for a detailed explanation.

Table of Contents

Your Vehicle at a Glance 1
Interior, exterior views and part identification of your Mazda.

Essential Safety Equipment 2
Use of safety equipment, including seats, seat belt system, child-restraint systems and SRS air bags.

Knowing Your Mazda 3
Explanation of basic operations and controls; opening/closing and adjustment of various parts.

Before Driving Your Mazda 4
Important information about driving your Mazda.

Driving Your Mazda 5
Explanation of instruments and controls.

Interior Comfort 6
Use of various features for drive comfort, including air-conditioning and audio system.

In Case of an Emergency 7
Helpful information on what to do in an emergency.

Maintenance and Care 8
How to keep your Mazda in top condition.

Customer Information and Reporting Safety Defects 9
Important consumer information including warranties and add-on equipment.

Specifications 10
Technical information about your Mazda.

Index 11

1 Your Vehicle at a Glance

Interior, exterior views and part identification of your Mazda.

Interior Overview 1-2
Interior Equipment (View A) 1-2
Interior Equipment (View B) 1-3
Interior Equipment (View C) 1-4

Exterior Overview 1-5
Front 1-5
Rear 1-6

Interior Overview

Interior Equipment (View A)

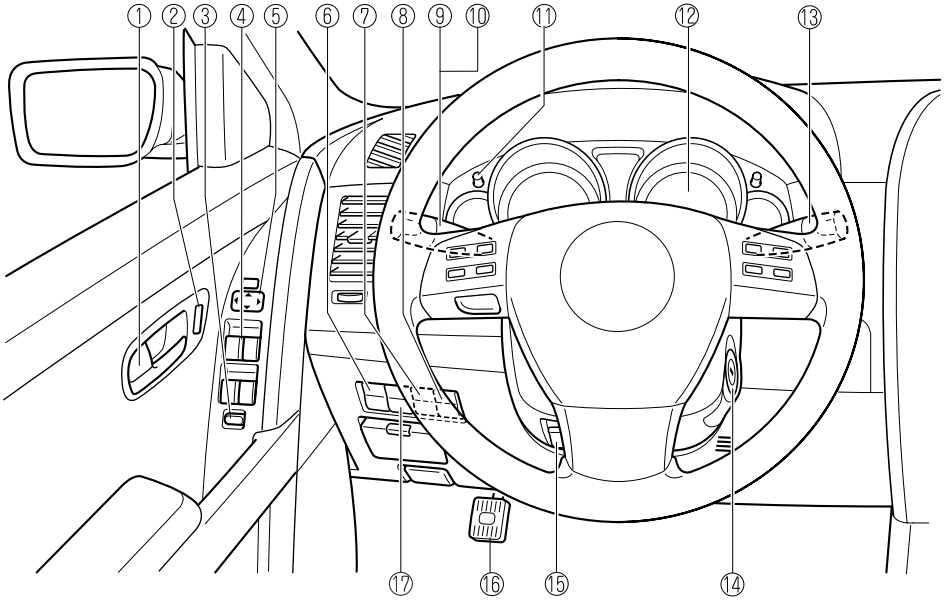

① Door-lock knob ..... page 3-26
② Power door lock switch ..... page 3-27
③ Power window lock switch ..... page 3-39
④ Power window switches ..... page 3-35
⑤ Outside mirror switch ..... page 3-57
⑥ Headlight leveling switch ..... page 5-60
⑦ TCS-OFF switch ..... page 5-22
⑧ Power liftgate switch ..... page 3-30
⑨ Lighting control ..... page 5-58
⑩ Turn and lane-change signal ..... page 5-61
⑪ Dashboard illumination knob ..... page 5-40
⑫ Instrument cluster ..... page 5-37
⑬ Wiper and washer lever ..... page 5-62
⑭ Ignition switch ..... page 5-2
⑮ Tilt wheel release lever ..... page 3-57
⑯ Parking brake ..... page 5-5
⑰ BSM OFF switch ..... page 5-36

 The equipment and installation position varies by vehicle

Interior Equipment (View B)

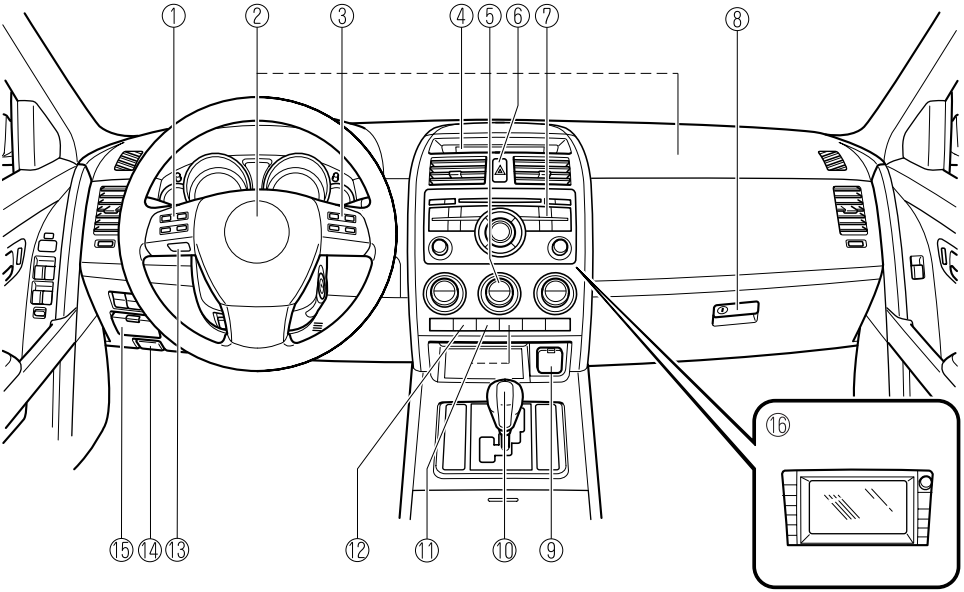

① Audio control switches ..... page 6-46
② SRS air bags ..... page 2-50
③ Cruise control switches ..... page 5-19
④ Information display ..... page 6-123
⑤ Climate control system ..... page 6-2
⑥ Hazard warning flasher switch ..... page 5-68
⑦ Audio system ..... page 6-17
⑧ Glove box ..... page 6-128
⑨ Accessory socket ..... page 6-131
⑩ AT shift lever ..... page 5-10
⑪ Seat warmer switches ..... page 2-10
⑫ Rear window defroster switch ..... page 5-66
⑬ Phone button ..... page 6-103
⑭ Hood release handle ..... page 3-43
⑮ Coin box ..... page 6-128
⑯ Navigation System (if equipped) ..... Refer to the separate manual

Interior Equipment (View C)

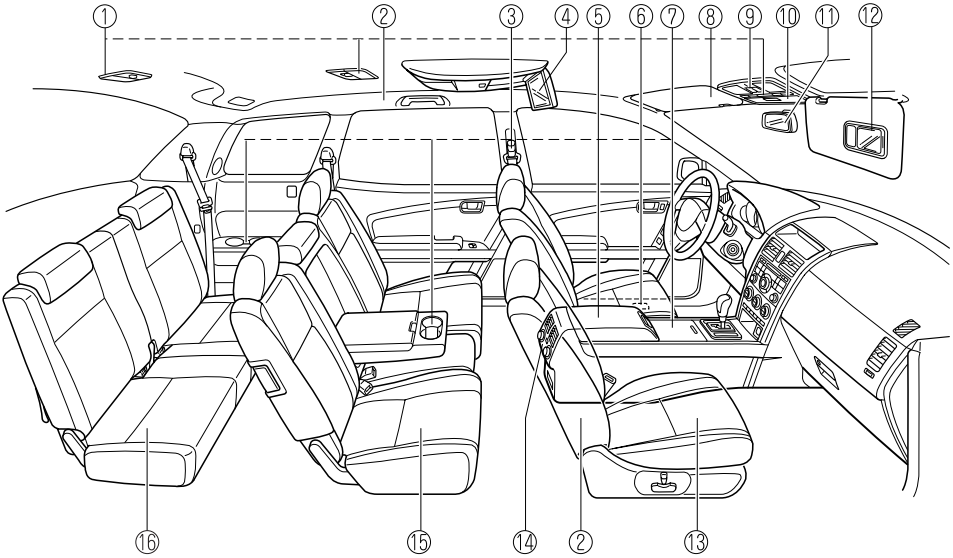

① Overhead lights ..... page 6-121
② SRS air bags ..... page 2-50
③ Seat belt ..... page 2-18
④ Rear entertainment system ..... page 6-51
⑤ Center console ..... page 6-128
⑥ Remote fuel-filler lid release ..... page 3-42
⑦ Cup holders ..... page 6-125
⑧ Sunvisor ..... page 6-120
⑨ Moonroof switches ..... page 3-45
⑩ Overhead console ..... page 6-127
⑪ Rearview mirror ..... page 3-58
⑫ Vanity mirror ..... page 6-120
⑬ Front seat ..... page 2-2
⑭ Climate control system (Rear) ..... page 6-14
⑮ Second-row seat ..... page 2-11
⑯ Third-row seat ..... page 2-16

Front

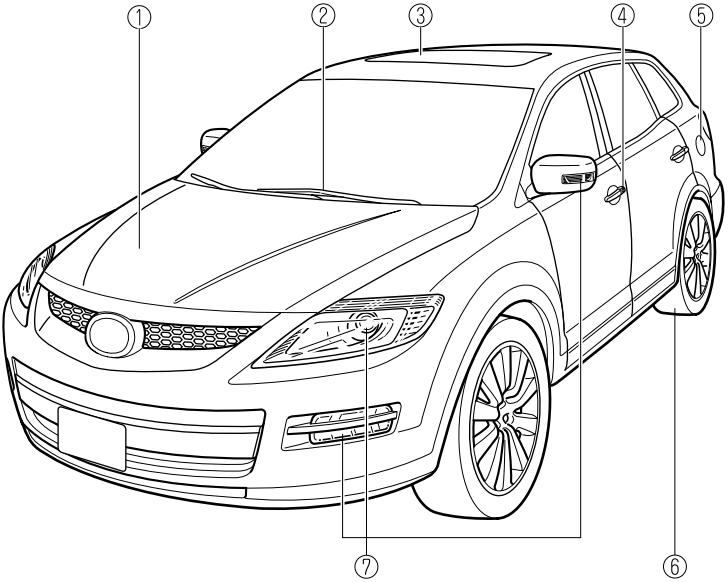

① Hood ..... page 3-43
② Windshield wiper blades ..... page 8-27
③ Moonroof ..... page 3-44
④ Door lock ..... page 3-26
⑤ Fuel-filler lid ..... page 3-42
⑥ Tires ..... page 8-33
⑦ Light bulbs ..... page 8-37

Exterior Overview

Rear

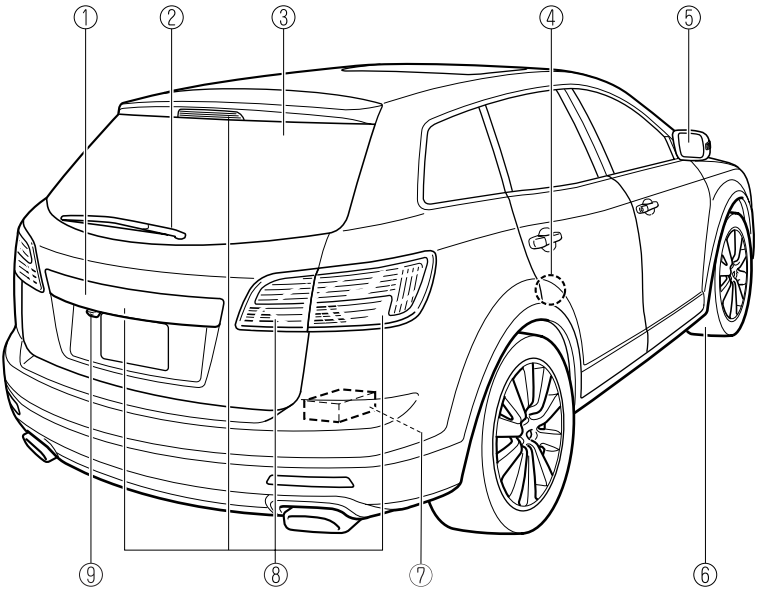

① Liftgate ..... page 3-28
② Rear wiper blade ..... page 8-29
③ Rear window antenna ..... page 6-17
④ Child safety lock ..... page 3-28
⑤ Outside mirror ..... page 3-57
⑥ Tires ..... page 8-33
⑦ Navigation System (if equipped) ..... Refer to the separate manual
⑧ Light bulbs ..... page 8-37
⑨ Rear view parking camera (if equipped) ..... Refer to the separate manual

2 Essential Safety Equipment

Use of safety equipment, including seats, seat belt system, child-restraint systems and SRS air bags.

Seats 2-2
Front Seats (Manually Operated Seats) 2-2
Front Seats (Electrically Operated Seats) 2-5
Second-Row Seats 2-11
Third-Row Seat 2-16

Seat Belt Systems 2-18
Seat Belt Precautions 2-18
3-Point Type Seat Belt 2-22
Front Seat Belt Pretensioner and Load Limiting Systems 2-24
Center-Rear Position Seat Belt (Second-Row Seats) 2-27
Seat Belt Extender 2-30
Seat Belt Warning Light/Beep 2-32

Child Restraint 2-34
Child Restraint Precautions 2-34
Installing Child-Restraint Systems 2-38
LATCH Child-Restraint Systems 2-45

SRS Air Bags 2-50
Supplemental Restraint System (SRS) Precautions 2-50
Supplemental Restraint System Components 2-55
How the SRS Air Bags Work 2-56
SRS Air Bag Deployment Criteria 2-60
Limitations to SRS Air Bag 2-61
Driver and Front Passenger Occupant Classification System 2-63
Monitoring and Maintenance 2-68

Front Seats (Manually Operated Seats)

⚠ WARNING

Do not modify or replace the front seats:

Modifying or replacing the front seats such as replacing the upholstery or loosening any bolts is dangerous. The front seats contain air bag components essential to the supplemental restraint system. Such modifications could damage the supplemental restraint system and result in serious injury. Consult an Authorized Mazda Dealer if there is any need to remove or reinstall the front seats.

Do not drive with damaged front seats:

Driving with damaged front seats is dangerous. A collision, even one not strong enough to inflate the air bags, could damage the front seats which contain essential air bag components. If there was a subsequent collision, an air bag may not deploy which could lead to injuries. Always have an Authorized Mazda Dealer inspect the front seats, front seat belt pretensioners and air bags after a collision.

Make sure the adjustable components of a seat are locked in place:

Adjustable seats and seatbacks that are not securely locked are dangerous. In a sudden stop or collision, the seat or seatback could move, causing injury. Make sure the adjustable components of the seat are locked in place by attempting to slide the seat forward and backward and rocking the seatback.

▼Seat Slide

⚠ WARNING

Adjust the driver seat only when the vehicle is stopped:

Adjusting the driver's seat while the vehicle is moving is dangerous. The driver could lose control of the vehicle and have an accident.

To move a seat forward or backward, raise the lever and slide the seat to the desired position and release the lever.

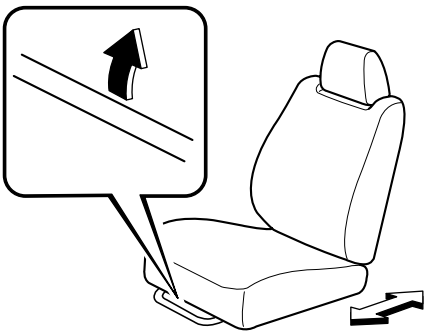

Make sure the lever returns to its original position and the seat is locked in place by attempting to push it forward and backward.

▼Seat Recline

WARNING

Do not drive with the seats reclined:

Sitting in a reclined position while the vehicle is moving is dangerous because you don't get the full protection from seat belts. During sudden braking or a collision, you can slide under the lap belt and suffer serious internal injuries. For maximum protection, sit well back and upright.

Always sit in a passenger seat properly with the seatback upright and feet on the floor:

If your vehicle is equipped with front passenger seat weight sensors, sitting in the front passenger seat improperly out of position or with the seatback reclined too far while the vehicle is moving is dangerous as it can take off weight from the seat bottom and affect the weight determination of the front passenger sensing system. As a result the front passenger will not have the supplementary protection of the air bag and seat belt pretensioner, which could cause result in serious injury. Always sit upright against your seatback, with your feet on the floor.

Do not drive with the seatback unlocked:

The seatback plays an important role in your protection in a vehicle. Leaving the seatback unlocked is dangerous as it can allow passengers to be ejected or thrown around and baggage to strike occupants in a sudden stop or collision, resulting in severe injury. After adjusting the seatback at any time, even when there are no other passengers, rock the seatback to make sure it is locked in place.

To change the seatback angle, lean forward slightly while raising the lever. Then lean back to the desired position and release the lever.

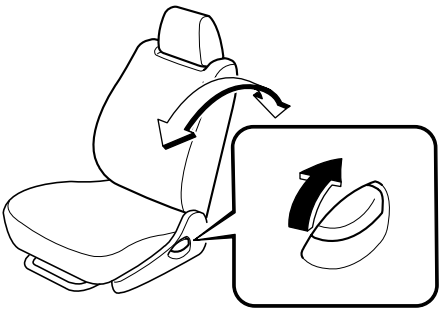

Make sure the lever returns to its original position and the seatback is locked in place by attempting to push it forward and backward.

⚠ CAUTION

When returning a rear-reclined seatback to its upright position, make sure you hold onto the seatback with your other hand while operating the lever. If the seatback is not supported, it will flip forward suddenly and could cause injury.

▼Height Adjustment (Driver's Seat)

By moving the seat lever up or down, the seat bottom height can be adjusted.

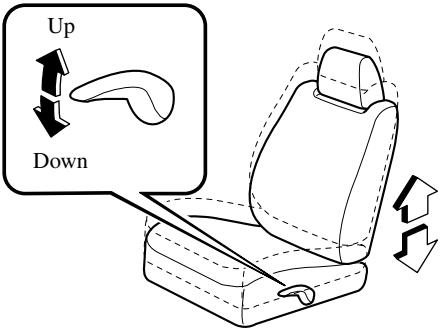

▼Lumbar Support Adjustment (Driver's Seat)

To increase the seat firmness, pull the lever forward. Push the lever backward to decrease firmness.

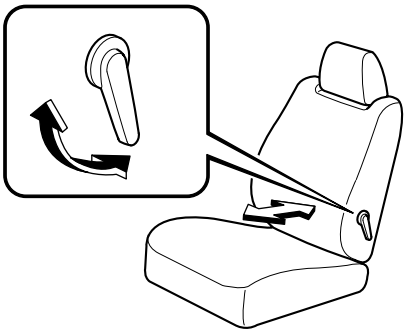

▼Head Restraint

⚠ WARNING

Always drive with the head restraints installed when seats are being used and make sure they are properly adjusted:

Driving with the head restraints adjusted too low or removed is dangerous. With no support behind your head, your neck could be seriously injured in a collision.

To raise a head restraint, pull it up to the desired position.
To lower the head restraint, press the stop-catch release, then push the head restraint down.

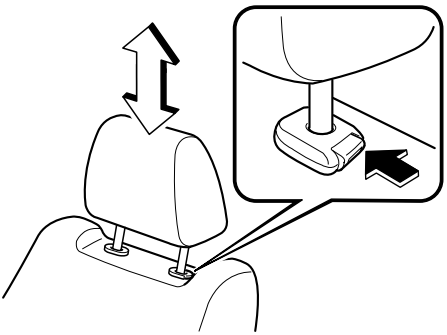

Adjust the head restraint so that the top is even with the top of the passenger's ears, never the passenger's neck to prevent injury.

Front Seats (Electrically Operated Seats)

⚠ WARNING

Do not modify or replace the front seats:

Modifying or replacing the front seats such as replacing the upholstery or loosening any bolts is dangerous. The front seats contain air bag components essential to the supplemental restraint system. Such modifications could damage the supplemental restraint system and result in serious injury. Consult an Authorized Mazda Dealer if there is any need to remove or reinstall the front seats.

Do not drive with damaged front seats:

Driving with damaged front seats is dangerous. A collision, even one not strong enough to inflate the air bags, could damage the front seats which contain essential air bag components. If there was a subsequent collision, an air bag may not deploy which could lead to injuries. Always have an Authorized Mazda Dealer inspect the front seats, front seat belt pretensioners and air bags after a collision.

⚠ CAUTION

- *The seat-bottom power adjustment is operated by motors. Avoid extended operation because excessive use can damage the motors.*
- *To prevent the battery from running down, avoid using the power adjustment when the engine is stopped. The adjuster uses a large amount of electrical power.*
- *Don't use the switch to make more than one adjustment at a time.*

▼Seat Slide

To slide the seat, move the slide lifter switch on the outside of the seat to the front or back and hold it. Release the switch at the desired position.

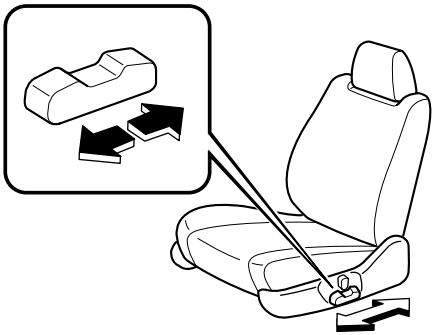

▼Seat Recline

⚠ WARNING

Do not drive with the seats reclined:
Sitting in a reclined position while the vehicle is moving is dangerous because you don't get the full protection from seat belts. During sudden braking or a collision, you can slide under the lap belt and suffer serious internal injuries. For maximum protection, sit well back and upright.

Always sit in a front passenger seat properly with the seatback upright and feet on the floor:
If your vehicle is equipped with front passenger seat weight sensors, sitting in the front passenger seat improperly out of position or with the seatback reclined too far while the vehicle is moving is dangerous as it can take off weight from the seat bottom and affect the weight determination of the front passenger sensing system. As a result the front passenger will not have the supplementary protection of the air bag and seat belt pretensioner, which could cause result in serious injury. Always sit upright against your seatback, with your feet on the floor.

Change the seatback angle by pressing the front or rear side of the reclining switch. Release the switch at the desired position.

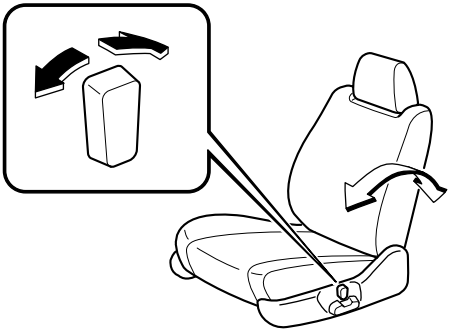

▼Height Adjustment (Driver's Seat)

The seat height can be adjusted by moving the switch up or down.

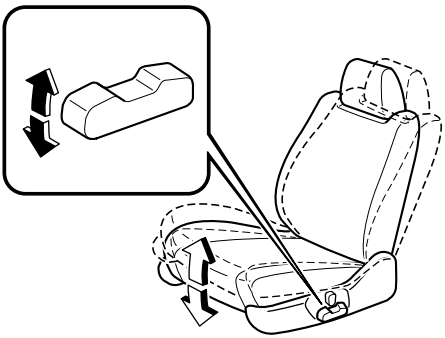

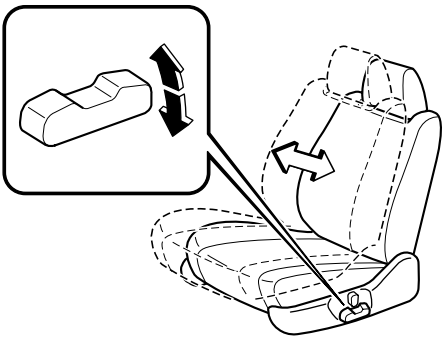

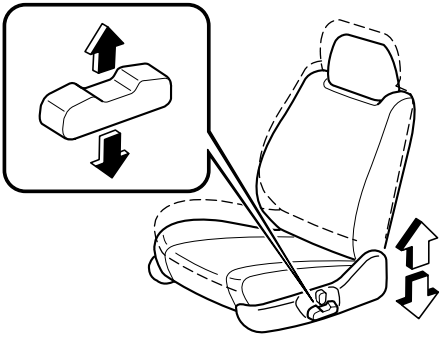

▼Seat Position Memory (Driver's Seat)*

One-touch seat position programming and call up is available on the driver's seat.

⚠ CAUTION

When calling up the seat position, do not place your hands or fingers around the seat bottom. The seat moves to the desired position automatically, and if your hands or fingers are placed around the seat bottom, it could cause injury.

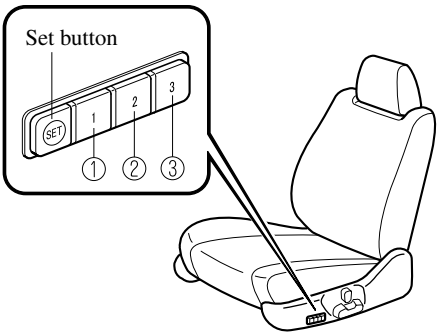

Programming of the driver's seat positions is possible using the following functions:

- Programming buttons ① —③ and the set button.
- Operation using the advanced key/ retractable type key

Programmed seat positions can also be called up using the following functions:

- Programming buttons ① —③ .
- Operation using the advanced key/ retractable type key

NOTE

Individual seat positions can be programmed to the number of programming buttons 3 available on the side of the driver's seat, plus one seat position for each advanced key/ retractable type key used with the vehicle.

Operation using the seat-side buttons

Programming

Seat position programming is possible when the vehicle is parked.

1. Adjust the seat to the desired position. For each seat position adjustment method refer to the following pages:
   Seat Slide (page 2-5)
   Seat Recline (page 2-6)
   Height Adjustment (page 2-6)
2. Press the desired programming button ① —③ while pressing the set button until a beep sound is heard.

NOTE

Vehicle maintenance or other reasons requiring the vehicle battery to be disconnected will result in the seat position memory being erased.
In this case, re-program the seat positions.

Seat position call up

With the ignition switch in the LOCK position, and the driver's door open, press the programming button ① —③ that has been programmed to the desired seat position.

*Some models.

NOTE

- *Seat positions can also be called up with the ignition switch in the ON position or the door closed by pressing and holding the programming button ① —③ that has been programmed to the desired seat position.*
- *If any of the following occurs, the seat position call up function cancels:*
  - *A seat adjustment switch is operated.*
  - *The vehicle is moving or starts to move.*
  - *The selected programming button ① —③ or the set button is pressed again.*

Operation using the advanced key/ retractable type key

With advanced key

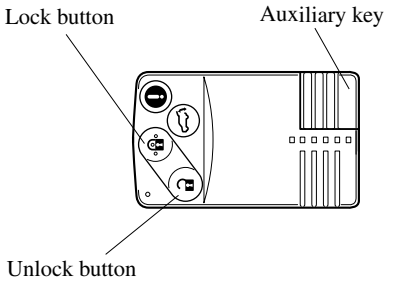

With retractable type key

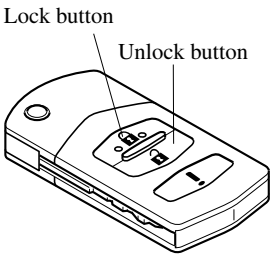

Programming

One seat position can be programmed into each advanced key/retractable type key. After the following conditions have been met, operate the seat and the advanced key/retractable type key to program the seat positions.

- The ignition switch is in the LOCK position
  (The auxiliary key/retractable type key is removed from the ignition switch)
- The driver's door is open

1. Adjust the seat to the desired position.
   For each seat position adjustment method, refer to the following pages:
   Seat Slide (page 2-5)
   Seat Recline (page 2-6)
   Height Adjustment (page 2-6)
2. Press and hold the unlock button of the advanced key/retractable type key while pressing the set button until a beep sound is heard.

Seat position call up

With the ignition switch in the LOCK position and the shift lever in park (P), unlock the doors using the unlock button on the advanced key/retractable type key, and open the driver's door within about 30 seconds.

Erasing memory

After the following conditions have been met, press the lock button of the advanced key/retractable type key while pressing the set button until a beep sound is heard.

- The ignition switch is in the LOCK position
  (The auxiliary key/retractable type key is removed from the ignition switch)
- The driver's door is open

NOTE

Memory will also be erased if any of the following operations are performed:

- *The advanced key/retractable type key code has been changed.*
  Refer to Immobilizer System (with Advanced Key) on page 3-50.
  Refer to Immobilizer System (without Advanced Key) on page 3-52.
  Refer to Immobilizer System on page 3-52.
- *The vehicle battery is disconnected for vehicle maintenance or other reasons.*

▼Lumbar Support Adjustment (Driver's Seat)

Manually operated

To increase the seat firmness, pull the lever forward. Push the lever backward to decrease firmness.

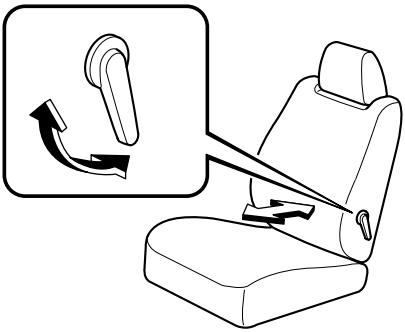

Electrically operated

The amount of lumbar support can be adjusted by pressing the switch.
To increase the seat firmness, press and hold the front part of the switch to the desired position, then release it.
Press the rear part of the switch to decrease firmness.

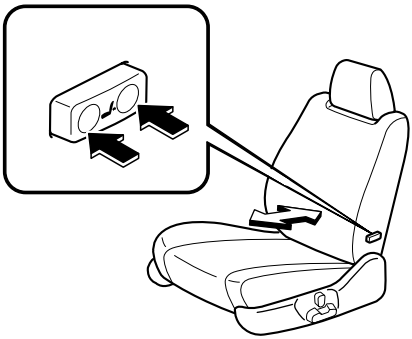

▼Head Restraint

⚠ WARNING

Always drive with the head restraints installed when seats are being used and make sure they are properly adjusted:

Driving with the head restraints adjusted too low or removed is dangerous. With no support behind your head, your neck could be seriously injured in a collision.

To raise a head restraint, pull it up to the desired position.
To lower the head restraint, press the stop-catch release, then push the head restraint down.

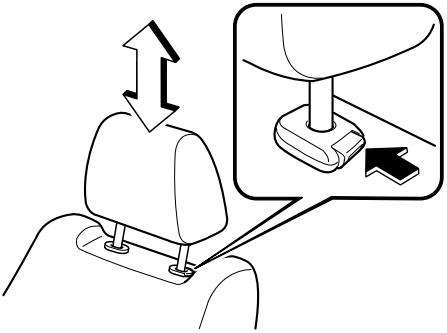

Adjust the head restraint so that the top is even with the top of the passenger's ears, never the passenger's neck to prevent injury.

▼Seat Warmer *

The front seats are electrically heated. The ignition switch must be in the ON position.

Press the switch to turn the seat warmer on or off. When the switch is in the ON position, the indicator light will come on.

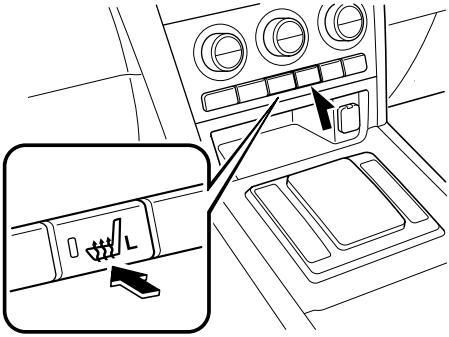

NOTE
The seat temperature is regulated automatically by a thermostat. Other than turning it on or off, it cannot be adjusted.

 *Some models.

Second-Row Seats

WARNING

Do not stack cargo higher than the seatback:

Stacking luggage or other cargo higher than the seatback is dangerous. During a sudden stop or collision, objects can fly around and become projectiles that could hit and injure passengers.

Make sure luggage and cargo is secured before driving:

Not securing cargo while driving is dangerous as it could move or be crushed during sudden braking or a collision and cause injury.

Make sure the adjustable components of a seat are locked in place by attempting to slide the seat forward and backward and rocking the seatback:

Adjustable seats that are not securely latched are dangerous. In a sudden stop or collision, the seat or seatback could move, causing injury.

Adjust the seat only when the vehicle is stopped:

Adjusting the seat while the vehicle is moving is dangerous. Sudden braking or a collision could cause serious injury.

Do not drive with the seatback unlocked:

The seatback plays an important role in your protection in a vehicle. Leaving the seatback unlocked is dangerous as it can allow passengers to be ejected or thrown around and baggage to strike occupants in a sudden stop or collision, resulting in severe injury. After adjusting the seatback at any time, even when there are no other passengers, rock the seatback to make sure it is locked in place.

Never allow a passenger to sit or stand on the folded seatback while the vehicle is moving:

Driving with a passenger on the folded seatback is dangerous. Allowing a child to sit up on the folded seatback while the vehicle is moving is particularly dangerous. In a sudden stop or even a minor collision, a child not in a proper seat or child-restraint system and seat belt could be thrown forward, back or even out of the vehicle resulting in serious injuries or death. The child in the baggage area could be thrown into other occupants and cause serious injury.

NOTE

The second-row seats cannot be removed.

▼Seat Slide

To move the seat forward or backward, raise the bar and slide the seat to the desired position and release the bar.

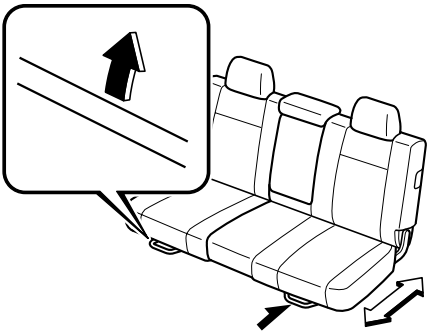

Make sure the bar returns to its original position and the seat is locked in place by attempting to push it forward and backward.

▼Seat Recline

⚠ WARNING

Do not drive with the seats reclined:
Sitting in a reclined position while the vehicle is moving is dangerous because you don't get the full protection from the seat belts. During sudden braking or a collision, you can slide under the lap belt and suffer serious internal injuries. For maximum protection, sit well back and upright.

Do not recline a second-row seatback when the third row seat is occupied:
Reclining the second-row seatback when the third-row seat is occupied is dangerous.Because the clearance in the third-row seat is limited, occupants in the third-row seat could be hurt seriously on a reclined second-row seatback.

To change the seatback angle, lean forward slightly while pulling the lever. Then lean back to the desired position and release the lever.

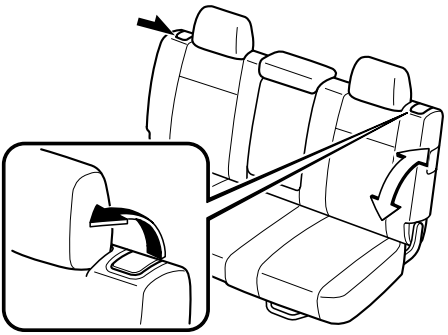

Make sure the lever returns to its original position and the seatback is locked in place by attempting to push it forward and backward.

⚠ CAUTION

When returning a rear-reclined seatback to its upright position, make sure you hold onto the seatback with your other hand while operating the lever. If the seatback is not supported, it will flip forward suddenly and could cause injury.

▼Head Restraint

Rear outboard seat

⚠ WARNING

Always drive with the head restraints installed when seats are being used and make sure they are properly adjusted:

Driving with the head restraints adjusted too low or removed is dangerous. With no support behind your head, your neck could be seriously injured in a collision.

Height adjustment

To raise a head restraint, pull it up to the locked position.
To lower the head restraint, press the stop-catch release, then push the head restraint down.

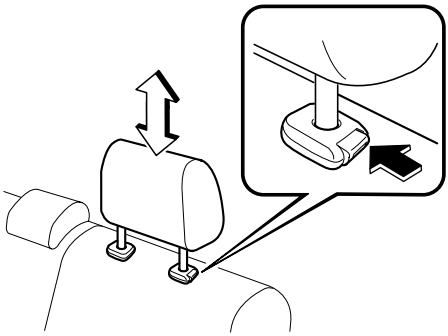

Adjust the head restraint so that the top is even with the top of the passenger's ears, never the passenger's neck to prevent injury.

Rear center seat

⚠ WARNING

Always drive with the head restraints installed when seats are being used and make sure they are properly adjusted:

Driving with the head restraints adjusted too low or removed is dangerous. With no support behind your head, your neck could be seriously injured in a collision.

To use a head restraint, pull it up to the locked position.
To lower the head restraint, press the stop-catch release, then push the head restraint down.

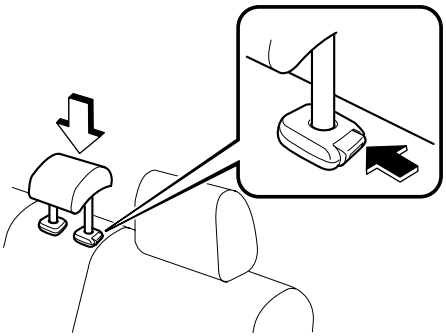

▼Armrest

The armrest can be used (no occupant in the center seat) or placed upright.

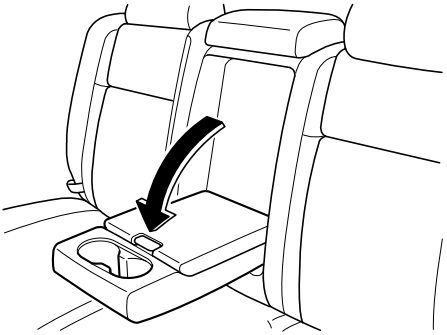

▼Third-Row Seat Access

After folding the second-row seat seatback and sliding the seat forward, you can access the third-row seat easily.

Entering/exiting the third-row seat area

Raise the lever on the side of the second-row seat to fold the seatback forward and slide the seat forward.

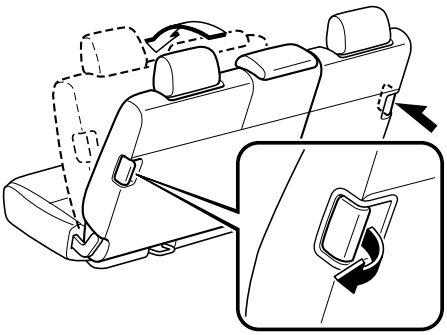

After entering/exiting the third-row seat area

1. Return the second-row seatback to its upright position and lock it after sliding it backward. Make sure it is locked by attempting to lightly move it forward and backward.
2. Make sure that the center-rear seat belt is routed properly (not under the head restraint) and the seat belt guide is snapped to the head restraint.

⚠ CAUTION

- *When folding a seatback, always hold onto the seatback with your other hand while operating the lever. If the seatback is not supported, it will flip forward suddenly and could cause injury.*
- *After entering/exiting the third-row seat area, return the seatback to its upright position. Otherwise, it could move unexpectedly and cause injury.*

▼Folding the Second-Row Seats

To create a flat luggage compartment space, fold the seatbacks forward.

Folding the seatbacks

1. Unfasten the lap portion of the center-rear seat belt (page 2-29) and stow it into the ceiling recess (page 2-29).

⚠ CAUTION

Always unfasten the lap portion of the belt before folding the rear-left seatback. Leaving the lap portion of the belt fastened could cause damage to the seat belt, buckle and seatback.

2. Slide the seat all the way back toward the rear of the vehicle.
3. Lower the head restraints all the way down (page 2-13).
4. Pull the lever and fold the seatback forward.

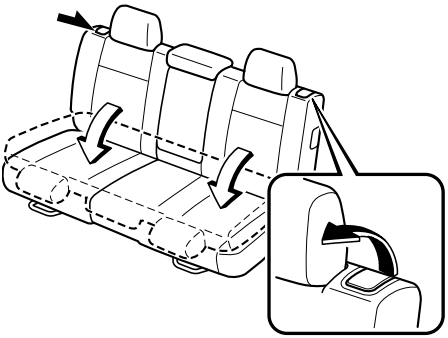

⚠ CAUTION

When folding a seatback, always hold onto the seatback with your other hand while operating the lever. If the seatback is not supported, it will flip forward suddenly and could cause injury.

NOTE

To create a flat luggage compartment space from the rear of the vehicle to the back of the front seats, fold the second-row and third-row seats (page 2-17).

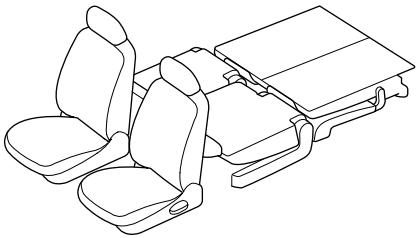

Returning seatbacks to their original positions

1. Lift the seatback to its original position.
   Make sure the seatback is secured by attempting to lightly move it forward and back.
2. Route the center-rear seat belt through the seat belt guide and fasten it. Check that all seat belts are routed properly for passenger use (page 2-27).

Third-Row Seat

⚠ WARNING

Do not stack cargo higher than the seatbacks:

Stacking luggage or other cargo higher than the seatbacks is dangerous. During a sudden stop or collision, objects can fly around and become projectiles that could hit and injure passengers.

Make sure luggage and cargo is secured before driving:

Not securing cargo while driving is dangerous as it could move or be crushed during sudden braking or a collision and cause injury.

Make sure the adjustable components of a seat are locked in place by attempting to rock the seatback:

Adjustable seats that are not securely latched are dangerous. In a sudden stop or collision, the seat or seatback could move, causing injury.

Do not drive with the seatback unlocked:

The seatback plays an important role in your protection in a vehicle. Leaving the seatback unlocked is dangerous as it can allow passengers to be ejected or thrown around and baggage to strike occupants in a sudden stop or collision, resulting in severe injury. After returning the seatback at any time, even when there are no other passengers, rock the seatback to make sure it is locked in place.

Never allow a passenger to sit or stand on the folded seatback while the vehicle is moving:

Driving with a passenger on the folded seatback is dangerous. Allowing a child to sit up on the folded seatback while the vehicle is moving is particularly dangerous. In a sudden stop or even a minor collision, a child not in a proper seat or child-restraint system and seat belt could be thrown forward, back or even out of the vehicle resulting in serious injuries or death. The child in the baggage area could be thrown into other occupants and cause serious injury.

▼Head Restraint

⚠ WARNING

Always drive with the head restraints set up when seats are being used and make sure they are properly set up:

Driving with the head restraints not set up is dangerous. With no support behind your head, your neck could be seriously injured in a collision.

To use a head restraint, pull it up to the locked position.
To lower the head restraint, press the stop-catch release, then push the head restraint down.

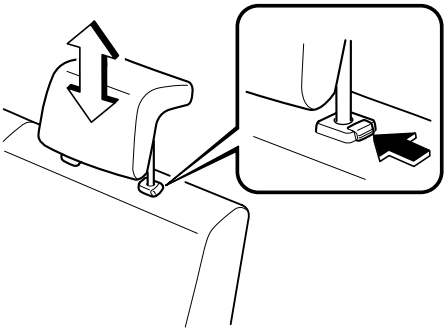

▼Split-Folding the Third-Row Seat

To create a flat luggage compartment space, fold the seatbacks forward.

To fold third-row seat

1. Lower the head restraints all the way down (page 2-16).
2. Pull the strap and fold the seatback forward.

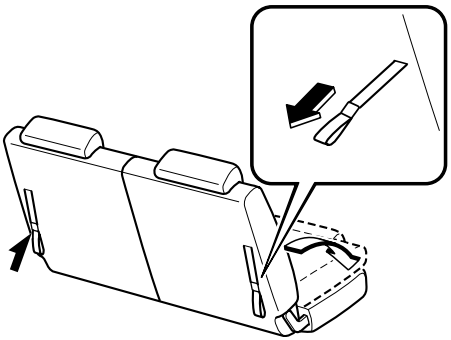

3. Fasten the strap to its original position.

NOTE
To create a flat luggage compartment space from the rear of the vehicle to the back of the front seats, fold the second-row and third-row seats (page 2-14).

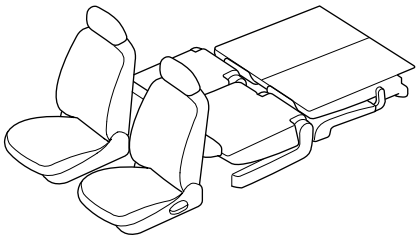

To return third-row seat to its original position

1. Return the seatback to its original position by pulling its strap.
   Make sure the seatback is secured by attempting to lightly move it forward and back.
2. Hold the board and fasten the strap to its original position.

Seat Belt Precautions

Seat belts help to decrease the possibility of severe injury during accidents and sudden stops. Mazda recommends that the driver and all passengers always wear seat belts.

Your vehicle has the following types of seat belts.

Seating Position		Types of seat belt
Front seat	Driver side	3-point type seat belt with emergency locking mode retractor
	Passenger side	3-point type seat belt with emergency locking mode retractor/automatic locking mode retractor
Second-row seat		
Third-row seat		

3-point type seat belt with emergency locking mode retractor
This belt has retractors with an inertia lock that keep the belt retracted when not in use. The lock allows the belt to remain comfortable on the user, but it will lock in position during a collision.
Refer to Emergency Locking Mode on page 2-20.
3-point type seat belt with emergency locking mode retractor/automatic locking mode retractor
In addition to the emergency locking mode function, this belt has retractors that operate in another mode, the automatic locking mode, for the child-restraint system.
Refer to Automatic Locking Mode on page 2-21.
Refer to Installing Child-Restraint Systems on page 2-38.
We recommend you put all children in the rear seats, if you must use the front passenger seat for a child, slide the front passenger seat as far back as possible and make sure any child-restraint system is secured properly.

WARNING

Always wear your seat belt and make sure all occupants are properly restrained:
Not wearing a seat belt is extremely dangerous. During a collision, occupants not wearing seat belts could hit someone or things inside the vehicle or even be thrown out of the vehicle. They could be seriously injured or even killed. In the same collision, occupants wearing seat belts would be much safer.

Do not wear twisted seat belts:
Twisted seat belts are dangerous. In a collision, the full width of the belt is not available to absorb the impact. This puts more force on the bones beneath the belt, which could cause serious injury or death.

Never use one seat belt on more than one person at a time:
Using one seat belt for more than one person at a time is dangerous. A seat belt used in this way cannot spread the impact forces properly and the two passengers could be crushed together and seriously injured or even killed. Never use one belt for more than one person at a time and always operate the vehicle with each occupant properly restrained.

Do not operate a vehicle with a damaged seat belt:
Using a damaged seat belt is dangerous. An accident could damage the belt webbing of the seat belt in use. A damaged seat belt cannot provide adequate protection in a collision. Have an Authorized Mazda Dealer inspect all seat belt systems in use during an accident before they are used again.

Have your seat belts changed immediately if the pretensioner or load limiter has been expended:
One or both front air bags may deploy, and the corresponding pretensioner(s) may also deploy at the same time. While it is safer to use a crash-used seat belt that was used in an accident than no seat belt at all, using a seat belt with an expended pretensioner or load limiter loaded reduces the safety available to you. Like the air bags, the seat belt pretensioners will only function once. After they are expended, they will not function again and must be replaced immediately. If the seat belt pretensioners are not replaced, the risk of injury in a collision will increase. Always have an Authorized Mazda Dealer inspect the seat belt pretensioners and air bags after any collision. Expended seat belt pretensioners and air bags must be replaced after any collision which caused them to deploy. Additionally, the load limiter will only limit loads on the chest once in a collision and this is another reason to have the front seat belts inspected.

In a rollover crash, an unbelted person is significantly more likely to die than a person wearing a seat belt.

⚠ CAUTION

Belt retraction may become difficult if the belts and rings are soiled, so try to keep them clean. For more details about cleaning the seat belts, refer to "Cleaning the Lap/Shoulder Belt Webbing" (page 8-58).

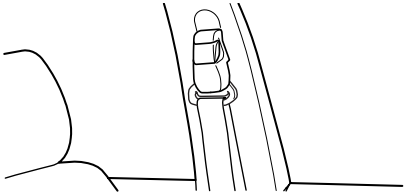

▼Pregnant Women and Persons with Serious Medical Conditions

Pregnant women should always wear seat belts. Ask your doctor for specific recommendations.
The lap belt should be worn SNUGLY AND AS LOW AS POSSIBLE OVER THE HIPS.
The shoulder belt should be worn across your shoulder properly, but never across the stomach area.
Persons with serious medical conditions also should wear seat belts. Check with your doctor for any special instructions regarding specific medical conditions.

▼Emergency Locking Mode

In the emergency locking mode, the belt remains comfortable on the occupant and the retractor will lock in position during a collision. When the seat belt is fastened, it will always be in the emergency locking mode until it is switched to automatic locking mode by pulling it all the way out to its full length. If the belt feels tight and hinders comfortable movement while the vehicle is stopped or in motion, it may be in the automatic locking mode because the belt has been pulled too far out. To return to the belt to the more comfortable emergency locking mode, wait until the vehicle has stopped in a safe, level area, retract the belt fully to convert it back to emergency locking mode and then extend it around you again.

▼Automatic Locking Mode

Always use the automatic locking mode to keep the child-restraint system from shifting to an unsafe position in the event of an accident. To enable seat belt automatic locking mode, pull it all the way out and connect it as instructed on the child-restraint system. It will retract down to the child-restraint system and stay locked on it. See the section on child restraint (page 2-34).

3-Point Type Seat Belt

NOTE
When using the center-rear seat belt, refer to "Center-Rear Position Seat Belt" (page 2-27).

▼Fastening the Seat Belt

1. Grasp the tongue.
2. Slowly pull out the lap/shoulder belt.

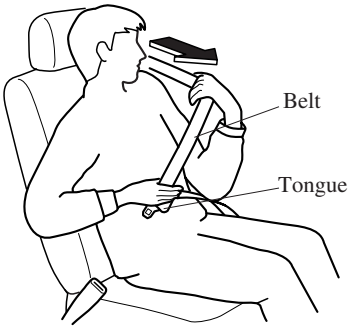

3. Insert the tongue into the buckle until you hear a click.

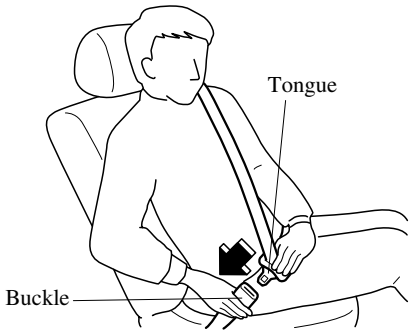

⚠ WARNING

Positioning the Shoulder Portion of the Seat Belt:

Improper positioning of the shoulder portion of the seat belt is dangerous. Always make sure the shoulder portion of the seat belt is positioned across your shoulder and near your neck, but never under your arm, on your neck, or on your upper arm.

4. Position the lap belt as low as possible, not on the abdominal area, then adjust the shoulder belt so that it fits snugly against your body.

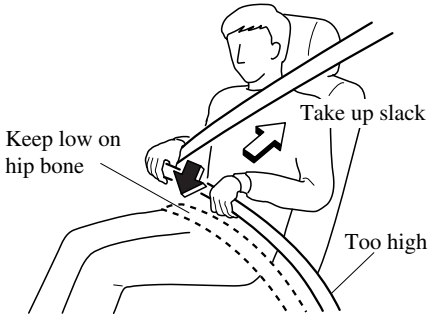

⚠ WARNING

Positioning the Lap Portion of the Seat Belt:

The lap portion of the seat belt worn too high is dangerous. In a collision, this would concentrate the impact force directly on the abdominal area, causing serious injury. Wear the lap portion of the belt snugly and as low as possible.

▼Unfastening the Seat Belt

Depress the button on the buckle. If the belt does not fully retract, pull it out and check for kinks or twists. Then make sure it remains untwisted as it retracts.

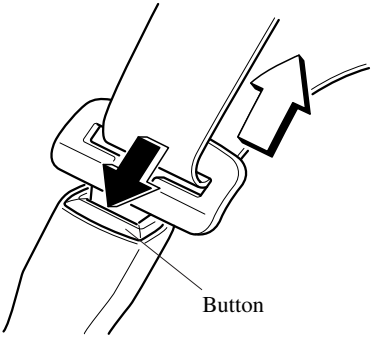

NOTE
If a belt does not fully retract, inspect it for kinks and twists. If it is still not retracting properly, have it inspected at an Authorized Mazda Dealer.

To secure the outboard-third seat belts when not in use, insert the belts in their seat belt retainers.

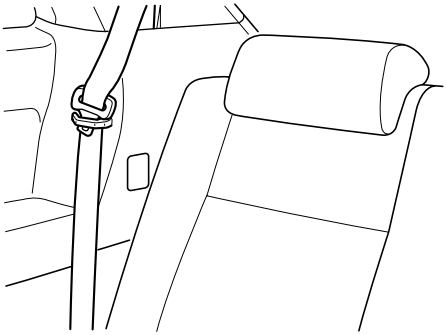

▼Shoulder Belt Adjuster*

Adjust the height of the shoulder belt if the seat belt touches your neck, or if it crosses your arm instead of your shoulder. To raise the shoulder belt adjuster, push the adjuster up. To lower the shoulder belt adjuster, pull the adjuster and slide it down. Make sure the adjuster is locked.

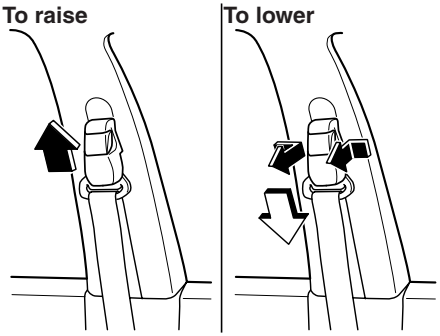

⚠ WARNING

Positioning the Shoulder Portion of the Seat Belt:

Improper positioning of the shoulder portion of the seat belt is dangerous. Always make sure the shoulder portion of the seat belt is positioned across your shoulder and near your neck, but never under your arm, on your neck, or on your upper arm.

*Some models.

Front Seat Belt Pretensioner and Load Limiting Systems

For optimum protection, the driver and front passenger seat belts are equipped with pretensioner and load limiting systems. For both these systems to work properly you must wear the seat belt properly.

Pretensioners:
The front seat belt retractors remove slack quickly as the air bags are expanding. For deployment details, refer to the SRS Air Bag Deployment Criteria (page 2-60). In addition, the pretensioner system for the front passenger, like the front passenger air bag, is designed to only deploy in accordance with the total seated weight on the front passenger seat. Any time the air bags and seat belt pretensioners have fired they must be replaced. For details, refer to the driver and front passenger occupant classification system (page 2-63).

Load limiter:
The load limiting system releases belt webbing in a controlled manner to reduce belt force on the occupant's chest. While the most severe load on a seat belt occurs in frontal collisions, the load limiter has an automatic mechanical function and can activate in any accident mode with sufficient occupant movement.
Even if the pretensioners have not fired, the load limiting function must be checked by an Authorized Mazda Dealer.

⚠ WARNING

Wear seat belts only as recommended in this owner's manual:

Incorrect positioning of the driver and front passenger seat belts is dangerous. Without proper positioning, the pretensioner and load limiting systems cannot provide adequate protection in an accident and this could result in serious injury. For more details about wearing seat belts, refer to "Fastening the seat belts" (page 2-22).

Have your seat belts changed immediately if the pretensioner or load limiter has been expended:

One or both front air bags may deploy, and the corresponding pretensioner(s) may also deploy at the same time. While it is safer to use a crash-used seat belt that was used in an accident than no seat belt at all, using a seat belt with an expended pretensioner or load limiter loaded reduces the safety available to you. Like the air bags, the seat belt pretensioners will only function once. After they are expended, they will not function again and must be replaced immediately. If the seat belt pretensioners are not replaced, the risk of injury in a collision will increase. Always have an Authorized Mazda Dealer inspect the seat belt pretensioners and air bags after any collision. Expended seat belt pretensioners and air bags must be replaced after any collision which caused them to deploy. Additionally, the load limiter will only limit loads on the chest once in a collision and this is another reason to have the front seat belts inspected.

Do not modify the components or wiring, or use electronic testing devices on the pretensioner system:

Modifying the components or wiring of the pretensioner system, including the use of electronic testing devices is dangerous. You could accidentally activate it or make it inoperable which would prevent it from activating in an accident. The occupants or repairers could be seriously injured.

Properly dispose of the pretensioner system:

Improper disposal of the pretensioner system or a vehicle with non-deactivated pretensioners is dangerous. Unless all safety procedures are followed, injury could result. Ask an Authorized Mazda Dealer how to safely dispose of the pretensioner system or how to scrap a pretensioner-equipped vehicle.

NOTE

- *The pretensioner system will activate in a moderate or severe frontal, near-frontal collision or roll-over accident. The pretensioner system for the front passenger is designed to only deploy in accordance with the total seated weight on the front passenger seat. It will not activate in most side or rear impacts.*
- *Some smoke (non-toxic gas) will be released when the air bags and pretensioners deploy. This does not indicate a fire. This gas normally has no effect on occupants, however, those with sensitive skin may experience light skin irritation. If residue from the deployment of the air bags or the front pretensioner system gets on the skin or in the eyes, wash it off as soon as possible.*

▼Air Bag/Front Seat Belt Pretensioner System Warning Light

If the air bag/front seat belt pretensioner system is working properly, the warning light illuminates when the ignition switch is turned to the ON position or after the engine is cranked. The warning light turns off after a specified period of time.

A system malfunction is indicated if the warning light constantly flashes, constantly illuminates or does not illuminate at all when the ignition switch is turned to the ON position. If any of these occur, consult an Authorized Mazda Dealer as soon as possible. The system may not work in an accident.

⚠ WARNING

Never tamper with the air bag/ pretensioner systems and always have an Authorized Mazda Dealer perform all servicing and repairs:

Self-servicing or tampering with the systems is dangerous. An air bag/ pretensioner could accidentally activate or become disabled causing serious injury or death.

▼Air Bag/Front Seat Belt Pretensioner System Warning Beep

If a malfunction is detected in both the air bag/front seat belt pretensioner system and the warning light, a warning beep sound will be heard for about 1 minute. After that, the one-minute beep will be repeated every 30 minutes.

Have your vehicle inspected at an Authorized Mazda Dealer as soon as possible.

⚠ WARNING

Do not drive the vehicle with the air bag/front seat belt pretensioner system warning beep sounding:

Driving the vehicle with the air bag/ front seat belt pretensioner system warning beep sounding is dangerous. In a collision, the air bags and the front seat belt pretensioner system will not deploy and this could result in death or serious injury.
Contact an Authorized Mazda Dealer to have the vehicle inspected as soon as possible.

Center-Rear Position Seat Belt (Second-Row Seats)

Before using the center-rear lap/shoulder belt make sure tongue (A) and anchor buckle (B) are fastened.

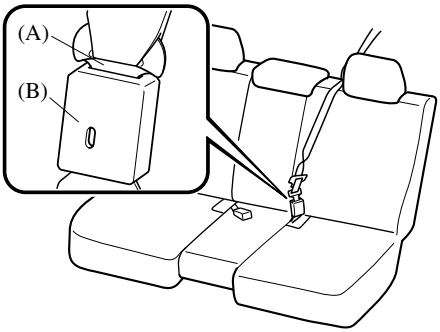

⚠ WARNING

Using the Seat Belt Guide:

Not using the seat belt guide is dangerous. If the seat belt guide is not used, the shoulder portion of the center-rear seat belt could be mistakenly positioned under the head restraint; position that cannot provide adequate protection in a collision and could result in the center-rear passenger being seriously injured or killed. Always make sure the shoulder portion of the center-rear seat belt is on the right side of the left-rear head restraint and guided correctly through the seat belt guide.

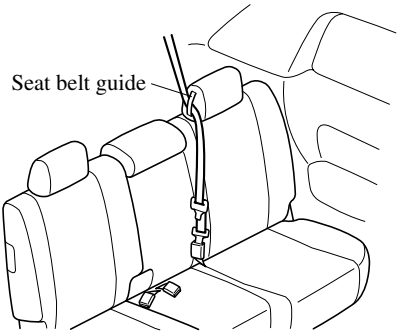

▼Fastening the Seat Belt

1. Grasp the tongue (C).
2. Slowly pull out the lap/shoulder belt.

3. Insert the tongue (C) into the buckle (D) until you hear a click.

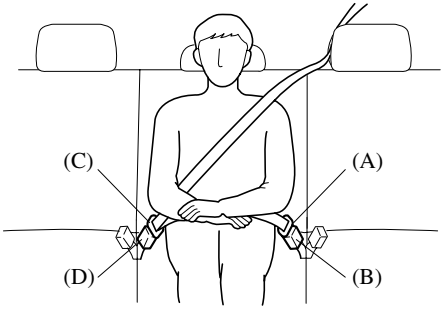

WARNING

Fastening the Center-Rear Seat Belt with Only One Buckle:

Fastening the center-rear seat belt with only one buckle is dangerous. If only one pair of seat belt tongue and buckle, either tongue (A) and anchor buckle (B) or tongue (C) and anchor buckle (D), is fastened, the seat belt cannot provide full protection. In a sudden stop or collision, the user could slide under the belt and suffer serious injuries. Always make sure that both pairs of seat belt tongues and buckles are fastened properly.

Positioning the Shoulder Portion of the Seat Belt:

Improper positioning of the shoulder portion of the seat belt is dangerous. Always make sure the shoulder portion of the seat belt is positioned across your shoulder and near your neck, but never under your arm, on your neck, or on your upper arm.

4. Position the lap belt as low as possible, not on the abdominal area, then adjust the shoulder belt so that it fits snugly against your body.

WARNING

Positioning the Lap Portion of the Seat Belt:

The lap portion of the seat belt worn too high is dangerous. In a collision, this would concentrate the impact force directly on the abdominal area, causing serious injury. Wear the lap portion of the belt snugly and as low as possible.

▼Unfastening the Seat Belt

Depress the button on the buckle. If the belt does not fully retract, pull it out and check for kinks or twists. Then make sure it remains untwisted as it retracts.

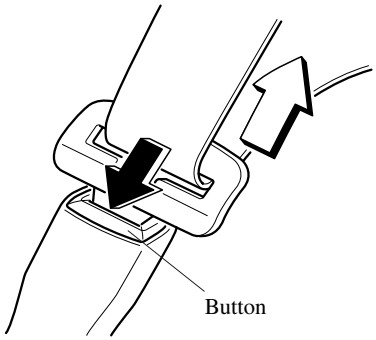

NOTE

If a belt does not fully retract, inspect it for kinks and twists. If it is still not retracting properly, have it inspected at an Authorized Mazda Dealer.

▼Unfastening the Lap Portion of the Seat Belt

Insert a small object such as a key in the anchor buckle (B) slot.

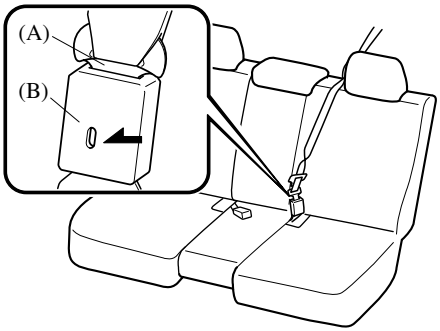

⚠ CAUTION

Always unfasten the lap portion of the belt before folding the left-rear seatback. Leaving the lap portion of the belt fastened could cause damage to the seat belt, buckle and seatback.

NOTE

To encourage rear seat passengers to wear their seat belts, we suggest leaving the center-rear lap position of the belt fastened at all times except when folding the rear seat forward.

▼Fastening the Lap Portion of the Seat Belt

Grasp tongue (A) and insert it into the anchor buckle (B) until you hear a click. It is now secure for passenger use.

NOTE

After returning the left-rear seatback to its upright position, guide the shoulder portion of the belt correctly through the seat belt guide and fasten the lap portion of the belt.

▼Stowing and pulling out the Center-Rear Position Seat Belt

The center-rear position seat belt can be stowed using the following procedure.

⚠ CAUTION

When stowing the seat belt, make sure the belt is locked securely into the recess. If the seat belt is not properly stowed, it might get caught in the seats and be damaged.

To stow the seat belt, retract the belt, put tongues (A) and (C) together and insert each tongue into the respective ceiling recess. Insert the tongues until you hear a click.

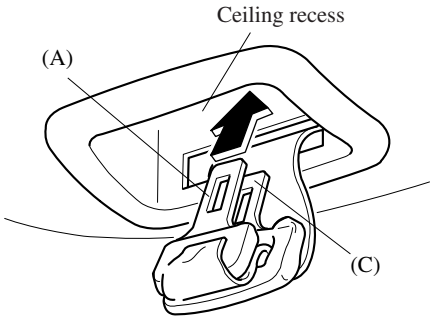

To pull out the seat belt, press the area indicated in the figure upward with your finger and slide the belt forward. Then slowly pull out the seat belt from the ceiling recess.

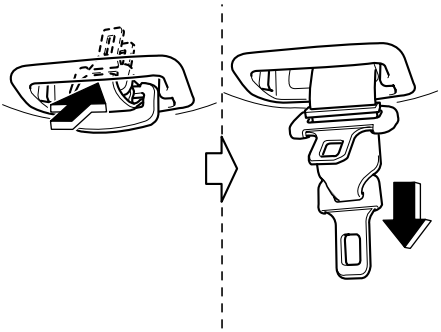

NOTE
Pulling out the seat belt all the way out will switch it to automatic locking mode. If automatic locking mode is not needed, retract the seat belt fully to convert it back to emergency locking mode.

Seat Belt Extender

If your seat belt is not long enough, even when fully extended, a seat belt extender may be available to you at no charge from your Authorized Mazda Dealer.
This extender will be only for you and for the particular vehicle and seat. Even if it plugs into other seat belts, it may not hold in the critical moment of a crash.
When ordering an extender, only order one that provides the necessary additional length to fasten the seat belt properly.
Please contact your Authorized Mazda Dealer for more information.

WARNING

Do not use a seat belt extender unless it is necessary:

Using a seat belt extender when not necessary is dangerous. The seat belt will be too long and not fit properly. In an accident, the seat belt will not provide adequate protection and you could be seriously injured. Only use the extender when it is required to fasten the seat belt properly.

Do not use an improper extender:

Using a seat belt extender that is for another person or a different vehicle or seat is dangerous. The seat belt will not provide adequate protection and the user could be seriously injured in an accident. Only use the extender provided for you and for the particular vehicle and seat. NEVER use the extender in a different vehicle or seat.

Do not use an extender that is too long:

Using an extender that is too long is dangerous. The seat belt will not fit properly. In an accident, the seat belt will not provide adequate protection and you could be seriously injured. Do not use the extender or choose one shorter in length if the distance between the extender's buckle and the center of the user's body is less than 15cm (6 in).

NOTE

When not in use, remove the seat belt extender and store it in the vehicle. If the seat belt extender is left connected, the seat belt extender might get damaged as it will not retract with the rest of the seat belt and can easily fall out of the door when not in use and be damaged. In addition, the seat belt warning light will not illuminate and function properly.

Seat Belt Warning Light/Beep

The seat belt warning light illuminates and a beep sound will be heard if the driver's seat belt is not fastened when the ignition switch is turned to the ON position.

Conditions of operation

Condition	Result
The driver's seat belt is not fastened when the ignition switch is turned to the ON position.	The warning light flashes and a beep sound will be heard for about 6 seconds.
The driver's seat belt is fastened while the warning light and the beep sound are activated.	The warning light turns off and the beep sound stops.
The driver's seat belt is fastened before the ignition switch is turned to the ON position.	The warning light will not illuminate and the beep sound will not be heard.

▼Belt Minder

NOTE
The belt minder can be deactivated. Consult an Authorized Mazda Dealer to deactivate and restore the seat belt minder.

Driver seated/Front passenger not seated

The belt minder is a supplemental warning to the seat belt warning function. If the driver's seat belt is not fastened when the ignition switch is turned to the ON position, the warning light/beep operates to give you further reminders according to the chart below.

Condition	Vehicle speed			
	Between 0 — 20 km/h (0 — 12 mph)		20 km/h (12 mph) or more	
Seat belt	○	×	○	×
Indicator				
Beep				♪

○ : Fastened
× : Unfastened
: Illuminated
: Flashing
♪ : Beep

Once the beep sound is heard, it continues sounding even if the vehicle speed lowers to 20 km/h (12 mph) or less until the seatbelt is fastened or the beep sound period has passed.

Driver seated/Front passenger seated

The seat belt warning function reminds the front passenger to fasten the seat belt according to the chart below.

Condition	Vehicle speed							
	Between 0 — 20 km/h (0 — 12 mph)				20 km/h (12 mph) or more			
Seat belt (Driver)	○	○	×	×	○	○	×	×
Seat belt (Passenger)	○	×	○	×	○	×	○	×
Indicator								
Beep						♪	♪	♪

○ : Fastened
× : Unfastened
: Illuminated
: Flashing
♪ : Beep

Placing heavy items on the front passenger seat may cause the front passenger seat belt warning function to operate depending on the weight of the item.

Once the beep sound is heard, it continues sounding even if the vehicle speed lowers to 20 km/h (12 mph) or less until the seatbelt is fastened or the beep sound period has passed.

NOTE

- *To allow the front passenger seat weight sensor to function properly, do not place and sit on an additional seat cushion on the front passenger seat. The sensor may not function properly because the additional seat cushion could cause sensor interference.*
- *When a small child sits on the front passenger seat, it is possible that neither the warning light nor the warning beep operate.*

Child Restraint Precautions

Mazda strongly urges the use of child-restraint systems for children small enough to use them.

You are required by law to use a child-restraint system for children in the U.S. and Canada. Check your local and state or provincial laws for specific requirements regarding the safety of children riding in your vehicle.

Whatever child-restraint system you consider, please pick the appropriate one for the age and size of the child, obey the law and follow the instructions that come with the individual child-restraint system.

A child who has outgrown child-restraint systems should sit in the rear and use seat belts, both lap and shoulder. If the shoulder belt crosses the neck or face, move the child closer to the center of the vehicle in the outboard seats, and towards the buckle on the right if the child is seated on the center seat.

Statistics confirm that the rear seats are the best place for all children up to 12 years of age, and more so with a supplemental restraint system (air bags).

A rear-facing child-restraint system should **NEVER** be used on the front seat with the air bag system activated. The front passenger's seat is also the least preferred seat for other child-restraint systems.

To reduce the chance of injuries caused by deployment of the front passenger air bag, your vehicle is equipped with the front passenger seat weight sensors. These sensors deactivate the front passenger front and side air bags and also the front passenger seat belt pretensioner system when the total seated weight on the front passenger seat is less than approximately 30 kg (66 lb).

When an infant or small child sits on the front passenger seat, the system shuts off the front passenger air bag, so make sure the front passenger air bag deactivation indicator light illuminates.

Even if the front passenger air bag is shut off, Mazda strongly recommends that children be properly restrained and child-restraint systems of all kinds are properly secured on the rear seats which are the best place for children.

For more details, refer to “Front passenger seat weight sensors” (page 2-63).

WARNING

Use the correct size child-restraint system:

For effective protection in vehicle accidents and sudden stops, a child must be properly restrained using a seat belt or child-restraint system depending on age and size. If not, the child could be seriously injured or even killed in an accident.

Follow the manufacturer's instructions and always keep the child-restraint system buckled down:

An unsecured child-restraint system is dangerous. In a sudden stop or a collision it could move causing serious injury or death to the child or other occupants. Make sure any child-restraint system is properly secured in place according to the child-restraint system manufacturer's instructions. When not in use, remove it from the vehicle or fasten it with a seat belt, or latch it down to BOTH LATCH lower anchors for LATCH child-restraint systems, and attach the corresponding tether anchor.

Always secure a child in a proper child-restraint system:

Holding a child in your arms while the vehicle is moving is extremely dangerous. No matter how strong the person may be, he or she cannot hold onto a child in a sudden stop or collision and it could result in serious injury or death to the child or other occupants. Even in a moderate accident, the child may be exposed to air bag forces that could result in serious injury or death to the child, or the child may be slammed into an adult, causing injury to both child and adult.

Never use a rear-facing child-restraint system in the front seat with an air bag that could deploy:

Rear-facing child-restraint systems on the front seat are particularly dangerous even though you may feel assured that a front passenger air bag will not deploy based on the fact that the front passenger air bag deactivation indicator light illuminates. The child-restraint system can be hit by a deploying air bag and moved violently backward resulting in serious injury or death to the child.

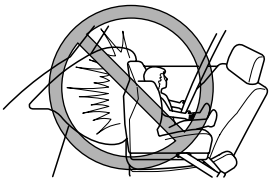

Do not install a front-facing child-restraint system on the front passenger seat unless it is unavoidable:

In a collision, the force of a deploying air bag could cause serious injury or death to the child. If installing a front-facing child-restraint system on the front passenger seat is unavoidable, move the front passenger seat as back as possible.

Seating a child in a child-restraint system on the front passenger seat is dangerous:

Your vehicle is equipped with front passenger seat weight sensors. Even with front passenger seat weight sensors, if you must use the front passenger seat to seat a child, using a child-restraint system on the front passenger seat under the following conditions increases the danger of the front passenger air bag deploying and could result in serious injury or death to the child.

- *The total seated weight of the child with the child-restraint system on the front passenger seat is approximately 30 kg (66 lb) or more with a child in the child-restraint system.*
- *Luggage or other items are placed on the seat with the child in the child-restraint system.*
- *A rear passenger or luggage pushing or pulling down on the front passenger seatback.*
- *A rear passenger puts their feet on the front seat rails.*
- *Luggage or other items are placed on the seatback or hung on the head restraint.*
- *The seat is washed.*
- *Liquids are spilled on the seat.*
- *The front passenger seat is moved backward, pushing into luggage or other items placed behind it.*
- *The front passenger seatback contacts the second-row seat.*
- *Luggage or other items are placed between the front passenger seat and driver seat.*
- *Any accessories increasing the total seated weight on the front passenger seat are attached to the front passenger seat.*

The designated positions with seat belts on the rear seats are the safest places for children. Always use seat belts and child restraints.

Do not allow a child to lean over or against the side window of a vehicle with side and curtain air bags:

It is dangerous to allow anyone to lean over or against the side window, the area of the front passenger seat, the front and rear window pillars and the roof edge along both sides from which the side and curtain air bags deploy, even if a child-restraint system is used. If the vehicle is equipped with side and curtain air bags, the impact of inflation could cause serious injury or death to the child. Furthermore, leaning over or against the front door could block the side and curtain air bags and eliminate the advantages of supplemental protection. With the front air bag and the additional side air bag that comes out of the front seat, the rear seat is always a better location for children. Do not allow a child to lean over or against the side window, even if the child is seated in a child-restraint system.

Never use one seat belt on more than one person at a time:

Using one seat belt for more than one person at a time is dangerous. A seat belt used in this way cannot spread the impact forces properly and the two passengers could be crushed together and seriously injured or even killed. Never use one belt for more than one person at a time and always operate the vehicle with each occupant properly restrained.

⚠ CAUTION

A seat belt or child-restraint system can become very hot in a closed vehicle during warm weather. To avoid burning yourself or a child, check them before you or your child touches them.

NOTE

Your Mazda is equipped with LATCH lower anchors for attachment of specially designed LATCH child-restraint systems in the rear seats. When using these anchors to secure a child-restraint system, refer to “LATCH Child-Restraint Systems” (page 2-45).

Installing Child-Restraint Systems

Accident statistics reveal that a child is safer in the rear seats. The front passenger's seat is clearly the worst choice for any child under 12, and with rear-facing child-restraint systems it is clearly unsafe due to air bags.

Some child-restraint systems now come with tethers and therefore must be installed on the seats that take tethers to be effective. In your Mazda, tethered child-restraint systems can only be accommodated in the three positions on the second-row seats.

Even if your vehicle is equipped with front passenger seat weight sensors (page 2-63), which automatically deactivates the front passenger air bag, a rear seat is the safest place for a child of any age or size.

Some child-restraint systems also employ specially designed LATCH attachments; refer to “LATCH Child-Restraint Systems” (page 2-45).

WARNING

Tethered Child-Restraint Systems Work Only on Tether-Equipped Rear Seats:
Installation of a tether equipped child-restraint system in the front passenger's seat or the third-row seats defeats the safety design of the system and will result in an increased chance of serious injury if the child-restraint system goes forward without benefit of being tethered. Place tether equipped child-restraint systems where there are tether anchors.

▼Second-Row Seats Child-Restraint System Installation

Follow these instructions when using a child-restraint system, unless you are attaching a LATCH-equipped child-restraint system to the rear LATCH lower anchors. Refer to “LATCH Child-Restraint Systems” (page 2-45).

NOTE
Follow the child-restraint system manufacturer's instructions carefully. If you are not sure whether you have a LATCH system or tether, check in the child-restraint system manufacturer's instructions and follow them accordingly. Depending on the type of child-restraint system, it may not employ seat belts which are in automatic locking mode.

1. When installing the child-restraint system on the second-row seat, make sure that the center-rear seat belt is routed through the seat belt guide.
2. Make sure the seatback is securely latched by pushing it back until it is fully locked.
3. Secure the child-restraint system with the lap portion of the lap/shoulder belt. See the manufacturer's instructions on the child-restraint system for belt routing instructions.

4. To get the retractor into the automatic locking mode, pull the shoulder belt portion of the seat belt until the entire length of the belt is out of the retractor.

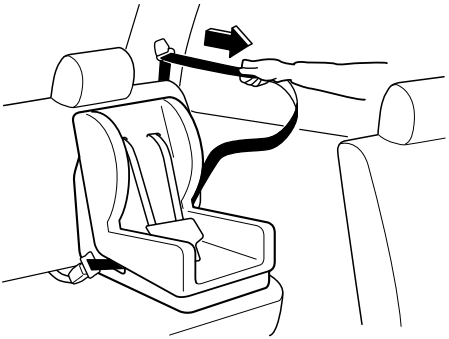

5. Push the child-restraint system firmly into the vehicle seat. Be sure the belt retracts as snugly as possible. Clicking from the retractor will be heard during retraction if the system is in the automatic locking mode. If the belt does not lock the seat down tight, repeat this step.

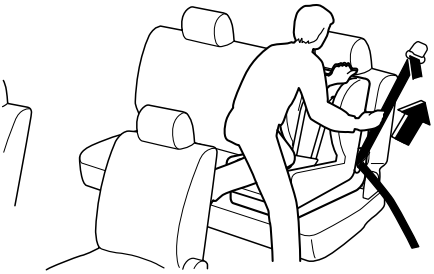

NOTE

Inspect this function before each use of the child-restraint system. You should not be able to pull the shoulder belt out of the retractor while the system is in the automatic locking mode. When you remove the child-restraint system, be sure the belt fully retracts to return the system to emergency locking mode before occupants use the seat belts.

6. If your child-restraint system requires the use of a tether strap, refer to the manufacturer's instructions to hook and tighten the tether strap after raising the head restraint.

Anchor bracket location

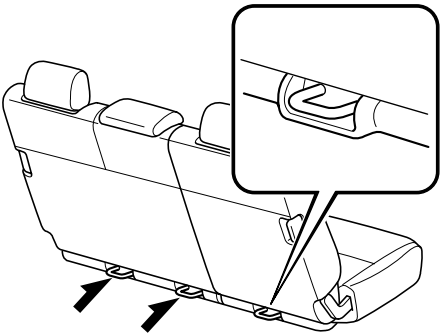

Tether strap position

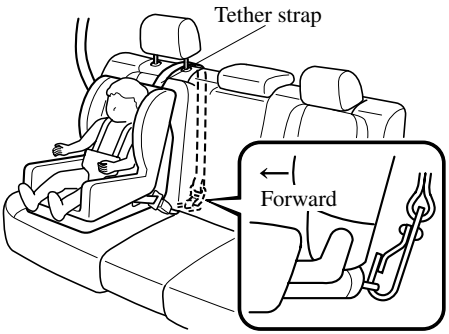

WARNING

Use the tether and tether anchor only for a child-restraint system:

Using the tether or tether anchor to secure anything but a child-restraint system is dangerous. This could weaken or damage the tether or tether anchor and result in injury.

Always route the tether strap between the head restraint and the seatback:

Routing the tether strap on top of the head restraint is dangerous. In a collision the tether strap could slide off the head restraint and loosen the child-restraint system. The child-restraint system could move which may result in death or injury to the child.

Always attach the tether strap to the correct tether anchor position:

Attaching the tether strap to the incorrect tether anchor position is dangerous. In a collision, the tether strap could come off and loosen the child-restraint system. If the child-restraint system moves it could result in death or injury to the child.

▼Third-Row Seats Child-Restraint System Installation

The third-row seats cannot accommodate LATCH-type child-restraint systems or tethers, therefore these systems must be installed on the other seat positions such as the second-row seat. If this not possible, LATCH-type child-restraint systems or tethers should be installed using seat belts depending on whether the child-restraint manufacturer allows their use without LATCH attachments and tether anchors.

Follow these manufacturer's instructions when using a child-restraint system.

NOTE

Follow the child-restraint system manufacturer's instructions carefully. Depending on the type of child-restraint system, it may not employ seat belts which are in automatic locking mode.

1. Secure the child-restraint system with the lap portion of the lap/shoulder belt. See the manufacturer's instructions on the child-restraint system for belt routing instructions.

2. To get the retractor into the automatic locking mode, pull the shoulder belt portion of the seat belt until the entire length of the belt is out of the retractor.

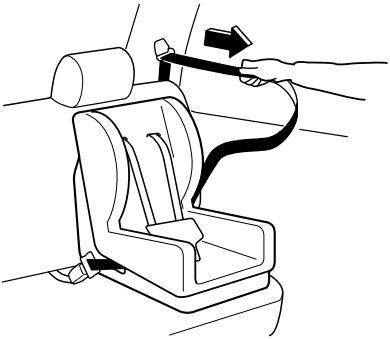

3. Push the child-restraint system firmly into the vehicle seat. Be sure the belt retracts as snugly as possible. Clicking from the retractor will be heard during retraction if the system is in the automatic locking mode. If the belt does not lock the seat down tight, repeat this step.

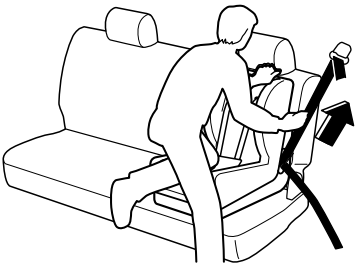

NOTE

Inspect this function before each use of the child-restraint system. You should not be able to pull the shoulder belt out of the retractor while the system is in the automatic locking mode. When you remove the child-restraint system, be sure the belt fully retracts to return the system to emergency locking mode before occupants use the seat belts.

▼If You Must Use the Front Seat for Children

If you cannot put all children in the rear seats, at least put the smallest children in the rear and be sure the largest child up front uses the shoulder belt over the shoulder.
NEVER put a rear-facing child-restraint system on the front passenger seat, even with a seat weight sensor equipped vehicle.
This seat is also not set up for tethered child-restraint systems, put them in one of the rear seat positions set up with tether anchors.
Likewise the LATCH child-restraint system cannot be secured in the front passenger's seat and should be used in the second-row seats.
Don't allow anyone to sleep against the side window if you have an optional side and curtain air bag, it could cause serious injuries to an out of position occupant. As children more often sleep in cars, it is better to put them in the rear seat. If installing the child-restraint system on the front seat is unavoidable, follow these instructions when using a front-facing child-restraint system in the front passenger's seat.

NOTE

- *To check if your front seats have side air bags:*
  Mazda vehicles equipped with side air bag will have a "SRS AIRBAG" tag on the outboard shoulder of the front seats.
- *To check if your vehicle has curtain air bags:*
  Mazda vehicles equipped with curtain air bag will have an "SRS AIRBAG" marking on the window pillars along the roof edge.

⚠ WARNING

Always move the front passenger seat as far back as possible if installing a front-facing child-restraint system on it is unavoidable:

As your vehicle has front air bags and doubly so if your vehicle has side air bags, a front-facing child-restraint system should be put on the front passenger seat only when it is unavoidable.
Even if the front passenger air bag deactivation indicator light illuminates, always move the seat as far back as possible, because the force of a deploying air bag could cause serious injury or death to the child.

Never use a rear-facing child-restraint system in the front seat with an air bag that could deploy:

Rear-facing child-restraint systems on the front seat are particularly dangerous.
Even in a moderate collision, the child-restraint system can be hit by a deploying air bag and moved violently backward resulting in serious injury or death to the child.
Even though you may feel assured that the front passenger air bag will not deploy based on the fact that the front passenger air bag deactivation indicator light illuminates.

Do not allow a child to lean over or against the side window of a vehicle with side and curtain air bags:

It is dangerous to allow anyone to lean over or against the side window, the area of the front passenger seat, the front and rear window pillars and the roof edge along both sides from which the side and curtain air bags deploy, even if a child-restraint system is used. If the vehicle is equipped with side and curtain air bags, the impact of inflation could cause serious injury or death to the child. Furthermore, leaning over or against the front door could block the side and curtain air bags and eliminate the advantages of supplemental protection. With the front air bag and the additional side air bag that comes out of the front seat, the rear seat is always a better location for children. Do not allow a child to lean over or against the side window, even if the child is seated in a child-restraint system.

▼Front Passenger's Seat Child-Restraint System Installation

1. Slide the seat as far back as possible.

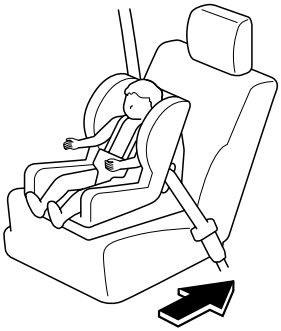

2. Secure the child-restraint system with the lap portion of the lap/shoulder belt. See the manufacturer's instructions on the child-restraint system for belt routing instructions.
3. To get the retractor into the automatic locking mode, pull the shoulder belt portion of the seat belt until the entire length of the belt is out of the retractor.
4. Push the child-restraint system firmly into the vehicle seat. Be sure the belt retracts as snugly as possible. Clicking from the retractor will be heard during retraction if the system is in automatic locking mode. If the belt does not lock the seat down tight, repeat the previous step and also this one.

NOTE

- *Inspect this function before each use of the child-restraint system. You should not be able to pull the shoulder belt out of the retractor while the system is in the automatic locking mode. When you remove the child-restraint system, be sure the belt fully retracts to return the system to emergency locking mode before occupants use the seat belts.*
- *Follow the child-restraint system manufacturer's instructions carefully. Depending on the type of child-restraint system, it may not employ seat belts which are in automatic locking mode.*

5. Make sure the front passenger air bag deactivation indicator light illuminates after installing a child-restraint system on the front passenger seat.
   Refer to Front passenger air bag deactivation indicator light on page 2-63.

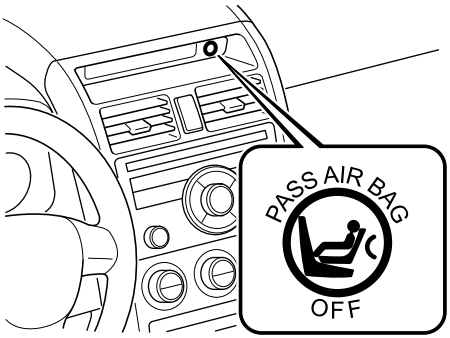

WARNING

Do not seat a child in a child-restraint system on the front passenger seat if the front passenger air bag deactivation indicator light does not illuminated:

*While it is always better to install any child-restraint system on the rear seat, it is imperative that a child-restraint system **ONLY** be used on the front passenger seat if the deactivation indicator light illuminates when the child is seated in the child-restraint system (page 2-63). Seating a child in a child-restraint system installed on the front passenger seat with the front passenger air bag deactivation indicator light not illuminated is dangerous. If this indicator light does not illuminate even when the total seated weight is less than approximately 30 kg (66 lb), this means that the front passenger front and side air bags, and seat belt pretensioner are ready for deployment. If an accident were to deploy an air bag, a child in a child-restraint system sitting in the front passenger seat could be seriously injured or killed. If the indicator light does not illuminate after seating a child in a child-restraint system on the front passenger seat, seat a child in a child-restraint system on the rear seat and consult an Authorized Mazda Dealer as soon as possible.*

LATCH Child-Restraint Systems

Your Mazda is equipped with LATCH lower anchors for attachment of specially designed LATCH child-restraint systems the second-row seats. Both anchors must be used, otherwise the seat will bounce around and put the child in danger. Most LATCH child-restraint systems must also be used in conjunction with a tether to be effective. If they have a tether you must use it to better assure your child's safety.

WARNING

Follow the manufacturer's instructions for the use of the child-restraint system:
An unsecured child-restraint system is dangerous. In a sudden stop or a collision it could move causing serious injury or death to the child or other occupants. Make sure the child-restraint system is properly secured in place according to the child-restraint system manufacturer's instructions.

Never attach two child-restraint systems to the same LATCH lower anchor:
Attaching two child-restraint systems to the same LATCH lower anchor is dangerous. In a collision, one anchor may not be strong enough to hold two child-restraint system attachments, and it may break, causing serious injury or death. If you use the seat position for another child-restraint system when an outboard LATCH position is occupied, use the center seat belts instead, and the tether if tether-equipped.

Make sure the child-restraint system is properly secured:
An unsecured child-restraint system is dangerous. In a sudden stop or a collision it could move causing serious injury or death to the child or other occupants. Follow the child-restraint system manufacturer's instructions on belt routing to secure the seat just as you would with a child in it so that nobody is tempted to put a child in an improperly secured seat later on. When not in use, remove it from the vehicle or fasten it with a seat belt, or latch it down to BOTH LATCH lower anchors for LATCH child-restraint systems.

Make sure there are no seat belts or foreign objects near or around the LATCH child-restraint system:
Not following the child-restraint system manufacturer's instructions when installing the child-restraint system is dangerous. If seat belts or a foreign object prevent the child-restraint system from being securely attached to the LATCH lower anchors and the child-restraint system is installed improperly, the child-restraint system could move in a sudden stop or collision causing serious injury or death to the child or other occupants. When installing the child-restraint system, make sure there are no seat belts or foreign objects near or around the LATCH lower anchors. Always follow the child-restraint system manufacturer's instructions.

▼LATCH Child-Restraint System Installation Procedure (Second-Row Outboard Seats)

1. Slide the second-row seat as far back as possible.
2. Make sure the seatback is securely latched by pushing it back until it is fully locked.
3. Expand the area between the seat bottom and the seatback slightly to verify the locations of the LATCH lower anchors.

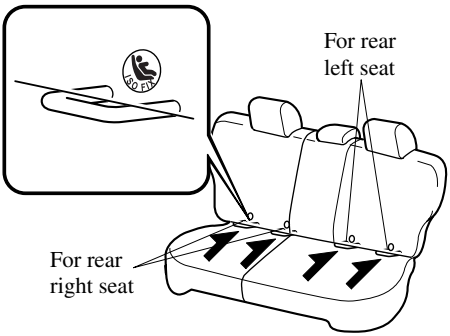

NOTE
The markings above the LATCH lower anchors indicate the locations of LATCH lower anchors for the attachment of a child-restraint system.

4. Secure the child-restraint system using BOTH LATCH lower anchors, following the child-restraint system manufacturer's instruction.
5. If your child-restraint system came equipped with a tether, that probably means it is very important to properly secure the tether for child safety. Please carefully follow the child-restraint system manufacturer's instructions when installing tethers.

Anchor bracket location

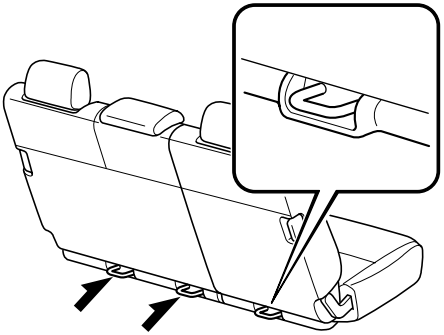

Tether strap position

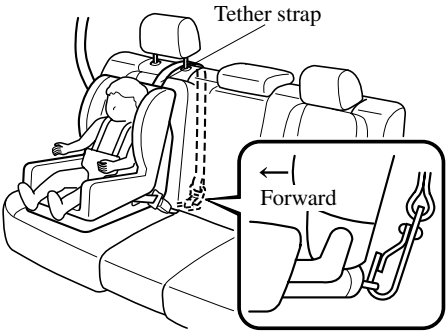

WARNING

Use the tether and tether anchor only for a child-restraint system:

Using the tether or tether anchor to secure anything but a child-restraint system is dangerous. This could weaken or damage the tether or tether anchor and result in injury.

Always route the tether strap between the head restraint and the seatback:

Routing the tether strap on top of the head restraint is dangerous. In a collision the tether strap could slide off the head restraint and loosen the child-restraint system. The child-restraint system could move which may result in death or injury to the child.

Always attach the tether strap to the correct tether anchor position:

Attaching the tether strap to the incorrect tether anchor position is dangerous. In a collision, the tether strap could come off and loosen the child-restraint system. If the child-restraint system moves it could result in death or injury to the child.

▼LATCH Child-Restraint System Installation Procedure (Second-Row Center Seat)

The LATCH lower anchors at the center of the rear seat are much further apart than the sets of LATCH lower anchors for child-restraint system installation at other seating positions. Child-restraint systems with rigid LATCH attachments cannot be installed on the center seating position. Some LATCH equipped child-restraint systems can be placed in the center position and will reach the nearest LATCH lower anchors which are 500 mm (19.7 in) apart. LATCH compatible child-restraint systems (with attachments on belt webbing) can be used at this seating position only if the child-restraint system manufacturer's instructions state that the child-restraint system can be installed to LATCH lower anchors that are 500 mm (19.7 in) apart. Do not attach two child-restraint systems to the same LATCH lower anchor. If your child-restraint system has a tether, it must also be used for your child's optimum safety.

Child Restraint

WARNING

Use the tether and tether anchor only for a child-restraint system:

Using the tether or tether anchor to secure anything but a child-restraint system is dangerous. This could weaken or damage the tether or tether anchor and result in injury.

Always route the tether strap between the head restraint and the seatback:

Routing the tether strap on top of the head restraint is dangerous. In a collision the tether strap could slide off the head restraint and loosen the child-restraint system. The child-restraint system could move which may result in death or injury to the child.

Always attach the tether strap to the correct tether anchor position:

Attaching the tether strap to the incorrect tether anchor position is dangerous. In a collision, the tether strap could come off and loosen the child-restraint system. If the child-restraint system moves it could result in death or injury to the child.

1. Slide the second-row seat as far back as possible.
2. Make sure the seatback is securely latched by pushing it back until it is fully locked.
3. Expand the area between the seat bottom and the seatback slightly to verify the locations of the LATCH lower anchors.

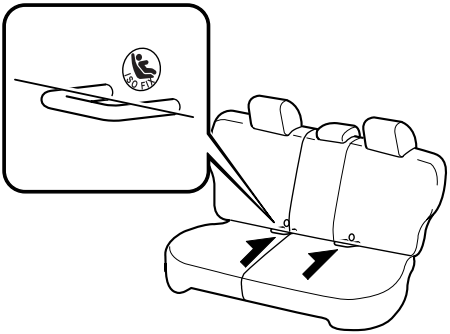

NOTE

The markings above the LATCH lower anchors indicate the locations of LATCH lower anchors for the attachment of a child-restraint system.

4. Secure the child-restraint system using BOTH LATCH lower anchors, following the child-restraint system manufacturer's instructions.
5. If your child-restraint system came equipped with a tether, that probably means it is very important to properly secure the tether for child safety. Please carefully follow the child-restraint system manufacturer's instructions when installing tethers.

Anchor bracket position

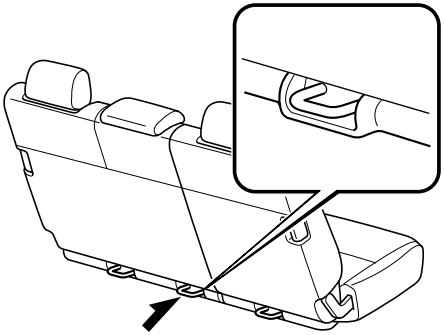

Tether strap position

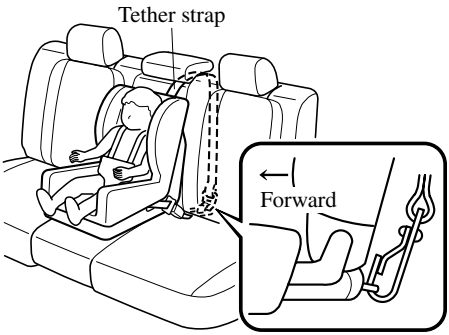

Supplemental Restraint System (SRS) Precautions

The front and side supplemental restraint systems (SRS) include up to 6 air bags. **Please verify which kinds of air bags are equipped on your vehicle by locating the "SRS AIRBAG" location indicators.** These indicators are visible in the area where the air bags are installed.
The air bags are installed in the following locations:

- The steering wheel hub (driver air bag)
- The front passenger dashboard (front passenger air bag)
- The outboard sides of the front seatbacks (side air bags)
- The front and rear window pillars, and the roof edge along both sides (curtain air bags)

The air bag supplemental restraint systems are designed to provide supplemental protection in certain situations so seat belts are always important in the following ways:

Without seat belt usage, the air bags cannot provide adequate protection during an accident. Seat belt usage is necessary to:
- Keep the occupant from being thrown into an inflating air bag.
- Reduce the possibility of injuries during an accident that is not designed for air bag inflation, such as rear impact.
- Reduce the possibility of injuries in frontal, near frontal, side collisions or roll-over accidents that are not severe enough to activate the air bags.
- Reduce the possibility of being thrown from your vehicle.
- Reduce the possibility of injuries to lower body and legs during an accident because the air bags provide no protection to these parts of the body.
- Hold the driver in a position which allows better control of the vehicle.

Your vehicle is also equipped with a driver and front passenger occupant classification system. For details, refer to the driver and front passenger occupant classification system (page 2-63).

Small children must be protected by a child-restraint system as stipulated by law in every state and province. In certain states and provinces, larger children must use a child-restraint system (page 2-34).

Carefully consider which child-restraint system is necessary for your child and follow the installation directions in this Owner's Manual as well as the child-restraint system manufacturer's instructions.

WARNING

Seat belts must be worn in air bag equipped vehicles:

Depending only on the air bags for protection during an accident is dangerous. Alone, air bags may not prevent serious injuries. The appropriate air bags can be expected to inflate only in the first accident, such as frontal, near frontal, side collisions or roll-over accident that are at least moderate. Vehicle occupants should always wear seat belts.

Children should not ride in the front passenger seat:

Placing a child, 12 years or under, in the front seat is dangerous. The child could be hit by a deploying air bag and be seriously injured or even killed. Even if the front passenger air bag deactivation indicator light illuminates, always move the front passenger seat as far back as possible. A sleeping child is more likely to lean against the door and be hit by the side air bag in a moderate, right-side collision. Whenever possible, always secure a child 12 years and under on the rear seats with an appropriate child-restraint system for the child's age and size.

Never use a rear-facing child-restraint system in the front seat with an air bag that could deploy:

Rear-facing child-restraint systems on the front seat are particularly dangerous even though you may feel assured that a front passenger air bag will not deploy based on the fact that the front passenger air bag deactivation indicator light illuminates. The child-restraint system can be hit by a deploying air bag and moved violently backward resulting in serious injury or death to the child.

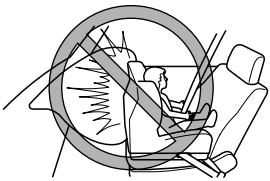

Do not sit too close to the driver and front passenger air bags:

Sitting too close to the driver and front passenger air bag modules or placing hands or feet on them is extremely dangerous. The driver and front passenger air bags inflate with great force and speed. Serious injuries could occur if someone is too close. The driver should always hold onto only the rim of the steering wheel. The front seat passenger should keep both feet on the floor. Front seat occupants should adjust their seats as far back as possible and always sit upright against the seatbacks with seat belts worn properly.

Sit in the center of the seat and wear seat belts properly:

Sitting too close to the side air bag modules or placing hands on them and sleeping up against the door or hanging out the windows is extremely dangerous. The side and curtain air bags inflate with great force and speed directly expand along the door on the side the car is hit. Serious injury could occur if someone is sitting too close to the door or leaning against a window, or if rear seat occupants grab the sides of the front seatbacks. Give the side and curtain air bags room to work by sitting in the center of the seat while the vehicle is moving with seat belts worn properly.

Do not attach objects on or around the area where driver and front passenger air bags deploy:

Attaching an object to the driver and front passenger air bag modules or placing something in front of them is dangerous. In an accident, an object could interfere with air bag inflation and injure the occupants.

Do not attach objects on or around the area where a side air bag deploys:

Attaching things to the front seat in such a way as to cover the outboard side of the seat in any way is dangerous. In an accident the object could interfere with the side air bag, which inflates from the outboard side of the front seats, impeding the added protection of the side air bag system or redirecting the air bag in a way that is dangerous. Furthermore, the bag could be cut open releasing the gas.

Do not hang net bags, map pouches or backpacks with side straps on the front seats. Never use seat covers on the front seats. Always keep the side air bag modules in your front seats free to deploy in the event of a side collision.

Do not attach objects on or around the area where a curtain air bag deploys:

Attaching objects to the areas where the curtain air bag activates such as on the windshield glass, side door glass, front and rear window pillars and along the roof edge and assist grips is dangerous. In an accident the object could interfere with the curtain air bag, which inflates from the front and rear window pillars and along the roof edge, impeding the added protection of the curtain air bag system or redirecting the air bag in a way that is dangerous. Furthermore, the bag could be cut open releasing the gas.

Do not place hangers or any other objects on the assist grips. When hanging clothes, hang them on the coat hook directly. Always keep the curtain air bag modules free to deploy in the event of a side collision or roll-over accident.

Do not place luggage or other objects under the front seats:

Placing luggage or other objects under the front seats is dangerous. The components essential to the supplemental restraint system could be damaged, and in the event of a side collision, the appropriate air bags may not deploy, which could result in death or serious injury. To prevent damage to the components essential to the supplemental restraint system, do not place luggage or other objects under the front seats.

Do not touch the components of the supplemental restraint system after the air bags have inflated:

Touching the components of the supplemental restraint system after the air bags have inflated is dangerous. Immediately after inflation, they are very hot. You could get burned.

Never install any front-end equipment to your vehicle:

Installation of front-end equipment, such as frontal protection bar (kangaroo bar, bull bar, push bar, or other similar devices), snowplow, or winches, is dangerous. The air bag crash sensor system could be affected. This could cause air bags to inflate unexpectedly, or it could prevent the air bags from inflating during an accident. Front occupants could be seriously injured.

Do not modify the suspension:

Modifying the vehicle suspension is dangerous. If the vehicle's height or the suspension is modified, the vehicle will be unable to accurately detect a collision or roll-over accident resulting in incorrect or unexpected air bag deployment and the possibility of serious injuries.

Do not use tires or wheels other than those specified for your Mazda:

Use of any tire or wheel other than those specified for your Mazda (page 10-6) is dangerous. Use of such wheels will prevent the vehicle's accident detections system from accurately detecting a collision or roll-over accident resulting in incorrect or unexpected air bag deployment and the possibility of serious injuries.

Do not overload your vehicle:

Overloading your vehicle is dangerous as is could prevent the air bag crash sensor system from accurately detecting a collision or roll-over accident resulting in incorrect or unexpected air bag deployment and the possibility of serious injuries. The gross axle weight rating (GAWR) and the gross vehicle weight rating (GVWR) for your vehicle are on the Motor Vehicle Safety Standard Label on the driver's door frame. Do not exceed these ratings.

Do not drive the vehicle off-road:

Driving your Mazda off-road is dangerous because the vehicle has not been designed to do such. Driving the vehicle off-road could prevent the air bag crash sensor system from accurately detecting a collision or roll-over accident resulting in incorrect or unexpected air bag deployment and the possibility of serious injuries.

Do not modify the supplemental restraint system:

Modifying the components or wiring of the supplemental restraint system is dangerous. You could accidentally activate it or make it inoperable. Do not make any modifications to the supplemental restraint system. This includes installing trim, badges, or anything else over the air bag modules. It also includes installing extra electrical equipment on or near system components or wiring. An Authorized Mazda Dealer can provide the special care needed in the removal and installation of front seats. It is important to protect the air bag wiring and connections to assure that the bags do not accidentally deploy, the driver seat slide position sensor and front passenger seat weight sensors are not damaged and that the seats retain an undamaged air bag connection.

NOTE

- *When an air bag deploys, a loud inflation noise can be heard and some smoke will be released. Neither is likely to cause injury, however, the texture of the air bags may cause light skin injuries on body parts not covered with clothing through friction.*
- *Should you sell your Mazda, we urge you to tell the new owner of its air bag systems and that familiarization with all instructions about them, from the Owner's Manual, is important.*

Supplemental Restraint System Components

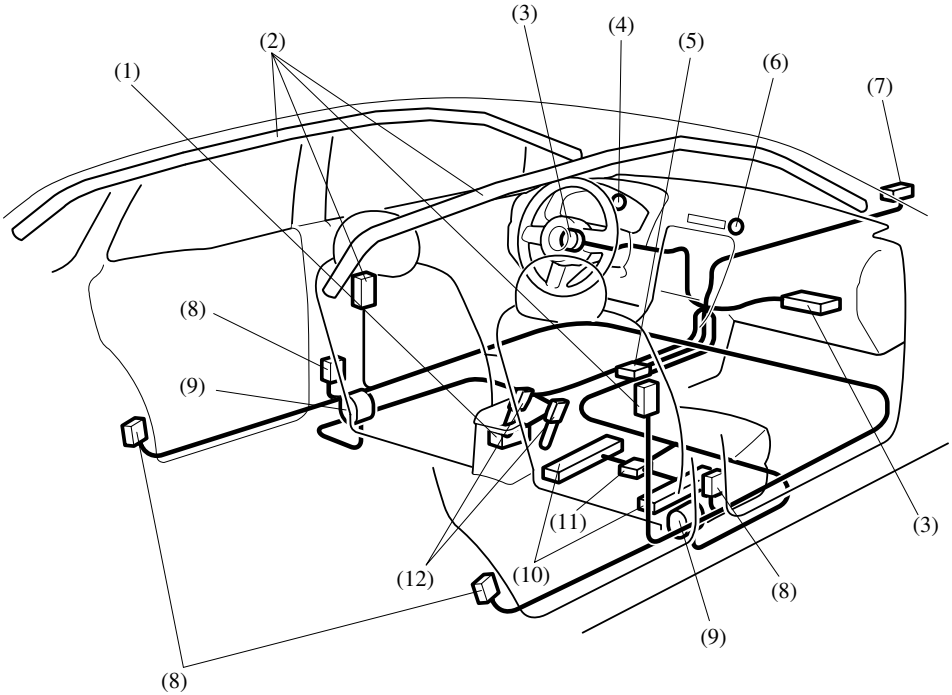

(1) Driver seat slide position sensor (page 2-63)
(2) Side and curtain inflators and air bags
(3) Driver/Front passenger dual stage inflators and air bags
(4) Air bag/front seat belt pretensioner system warning light (page 2-59)
(5) Crash and roll-over sensors, and diagnostic module (SAS unit)
(6) Front passenger air bag deactivation indicator light (page 2-63)
(7) Front air bag sensor
(8) Side crash sensor
(9) Front seat belt pretensioner and load limiting systems (page 2-24)
(10) Front passenger seat weight sensors (page 2-63)
(11) Front passenger seat weight sensor control module
(12) Driver and front passenger seat belt buckle switches (page 2-67)

How the SRS Air Bags Work

Your Mazda is equipped with the following types of SRS air bags. SRS air bags are designed to work together with the seat belts to help to reduce injuries during an accident. The SRS air bags are designed to provide further protection for passengers in addition to the seat belt functions. Be sure to wear seat belts properly.

▼Front Seat Belt Pretensioners

The front seat belt pretensioners are designed to deploy in moderate or severe frontal, near frontal collisions or roll-over accidents.

▼Driver Air Bag

The driver air bag is mounted in the steering wheels.
When air bag crash sensors detect a frontal impact of greater than moderate force, the driver's air bag inflates quickly helping to reduce injury mainly to the driver's head or chest caused by directly hitting the steering wheel.
The driver, dual stage air bag controls air bag inflation in two energy stages. During an impact of moderate severity the driver air bag deploys with lesser energy, whereas during more severe impacts, it deploys with more energy.

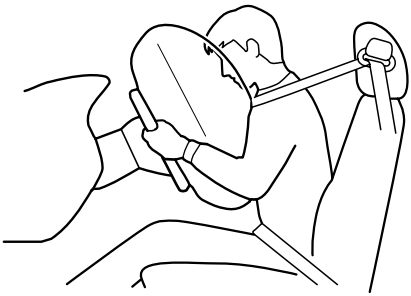

▼Front Passenger Air Bag

The front passenger air bag is mounted in the front passenger dashboard.
The inflation mechanism for the front passenger air bag is the same as the driver's air bag, as mentioned above. In addition, the front passenger air bag is designed to only deploy in accordance with the total seated weight on the front passenger seat. For details, refer to the driver and front passenger occupant classification system (page 2-63).

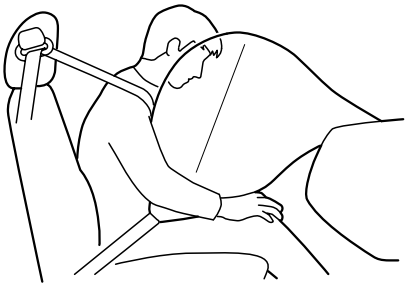

▼Side Air Bags

The side bags are mounted in the outboard sides of the front seatbacks.
When the air bag crash sensors detect a side impact of greater than moderate force, the system inflates the side air bag only on the side in which the vehicle was hit. The side air bag inflates quickly to reduce injury to the driver or front passenger's chest caused by directly hitting interior parts such as a door or window. In addition, the front passenger side air bag is designed to only deploy in accordance with the total seated weight on the front passenger seat. For details, refer to the driver and front passenger occupant classification system (page 2-63).

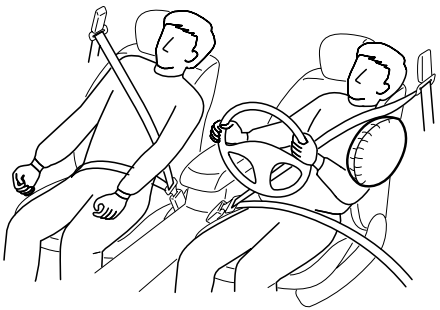

▼Curtain Air Bags

The curtain air bags are mounted in the front and rear window pillars, and the roof edge along both sides.
When the air bag crash sensors detect a side impact of greater than moderate force, the curtain air bag inflates quickly and helps to reduce injury mainly to the rear outboard passenger's head caused by directly hitting interior parts such as a door or window.
In a side impact:
Greater than moderate impact to one side of the vehicle will cause the curtain air bag on that side only to inflate.

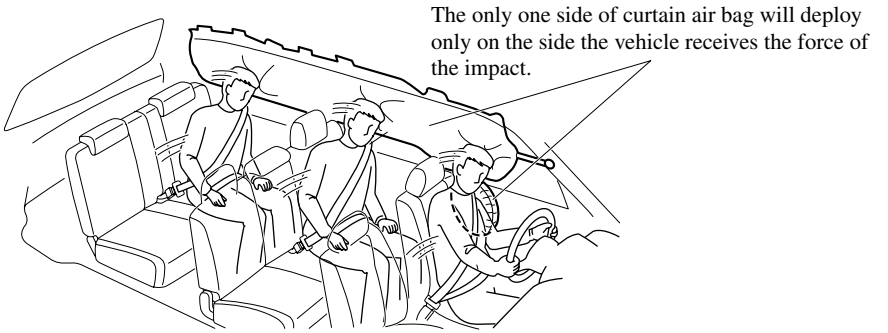

In a roll-over:
In response to a vehicle roll-over, both the curtain air bags inflate.

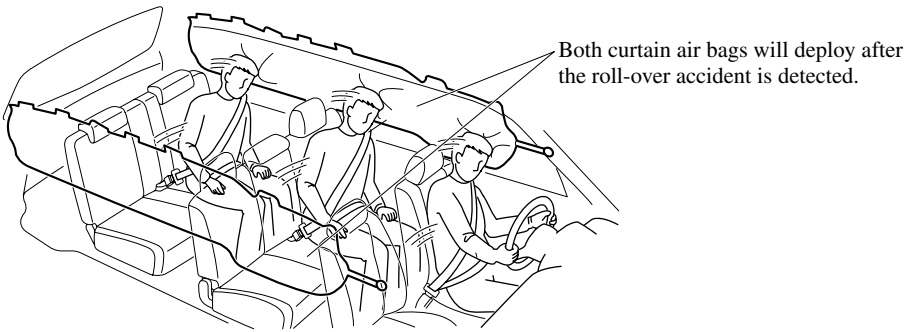

▼Air Bag/Front Seat Belt Pretensioner System Warning Light

If the air bag/front seat belt pretensioner system is working properly, the warning light illuminates when the ignition switch is turned to the ON position or after the engine is cranked. The warning light turns off after a specified period of time.

A system malfunction is indicated if the warning light constantly flashes, constantly illuminates or does not illuminate at all when the ignition switch is turned to the ON position. If any of these occur, consult an Authorized Mazda Dealer as soon as possible. The system may not work in an accident.

⚠ WARNING

Never tamper with the air bag/pretensioner systems and always have an Authorized Mazda Dealer perform all servicing and repairs:

Self-servicing or tampering with the systems is dangerous. An air bag/pretensioner could accidentally activate or become disabled causing serious injury or death.

▼Air Bag/Front Seat Belt Pretensioner System Warning Beep

If a malfunction is detected in both the air bag/front seat belt pretensioner system and the warning light, a warning beep sound will be heard for about 1 minute. After that, the one-minute beep will be repeated every 30 minutes.

Have your vehicle inspected at an Authorized Mazda Dealer as soon as possible.

⚠ WARNING

Do not drive the vehicle with the air bag/front seat belt pretensioner system warning beep sounding:

Driving the vehicle with the air bag/front seat belt pretensioner system warning beep sounding is dangerous. In a collision, the air bags and the front seat belt pretensioner system will not deploy and this could result in death or serious injury. Contact an Authorized Mazda Dealer to have the vehicle inspected as soon as possible.

SRS Air Bag Deployment Criteria

This chart indicates the applicable SRS equipment that will deploy depending on the type of collision.
(The illustrations are the representative case of collisions.)

SRS equipment	Types of collision			
	A severe frontal/near frontal collision	A severe side collision	A roll-over/near roll-over	A rear collision
	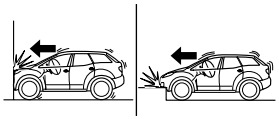	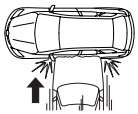	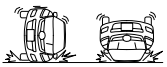	
	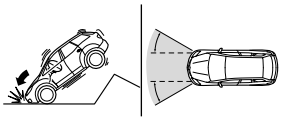		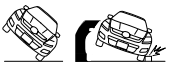	
Front seat belt pretensioner	X*(both sides)		X*(both sides)	No air bag and front seat belt pretensioner will be activated in a rear collision.
Driver air bag	X			
Front passenger air bag	X*			
Side air bag		X*(impact side only)		
Curtain air bag		X (impact side only)	X (both sides)	

X: The SRS air bag equipment is designed to deploy in a collision.
*: The front passenger front and side air bags and the seat belt pretensioner are designed to deploy depending on the condition of the total seated weight on the front passenger seat.

Limitations to SRS Air Bag

In severe collisions or roll-overs such as those described previously in “SRS Air Bag Deployment Criteria”, the applicable SRS air bag equipment will deploy. However, in some accidents, the equipment may not deploy depending on the type of collision and its severity.

Limitations to front/near front collision detection:
The following illustrations are examples of front/near front collisions that may not be detected as severe enough to deploy the SRS air bag equipment.

Impacts involving trees or poles

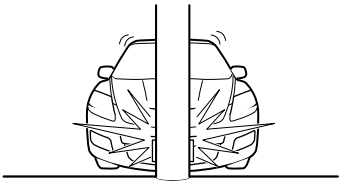

Frontal offset impact to the vehicle

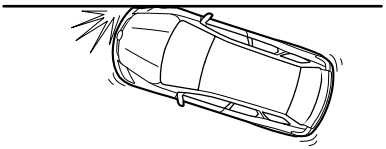

Rear-ending or running under a truck's tail gate

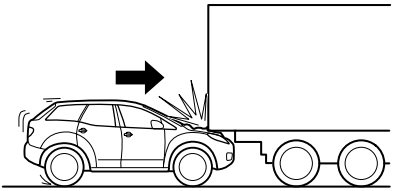

Limitations to side collision detection:
The following illustrations are examples of side collisions that may not be detected as severe enough to deploy the SRS air bag equipment.

Side impacts involving trees or poles

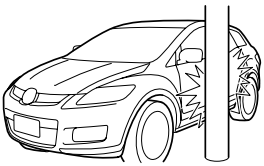

Side impacts with two-wheeled vehicles

Limitations to roll-over detection:
The following illustrations are examples of accidents that may not be detected as a roll-over accident. Therefore, the front seat belt pretensioners and curtain air bags may not deploy.

Pitch end over end

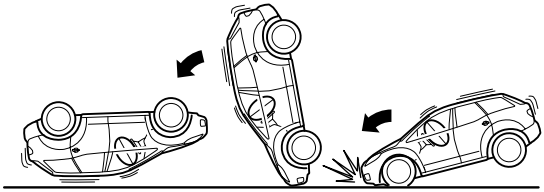

Driver and Front Passenger Occupant Classification System

First, please read “Supplemental Restraint System (SRS) Precautions” (page 2-50) carefully.

▼Driver Seat Slide Position Sensor

Your vehicle is equipped with a driver seat slide position sensor as a part of the supplemental restraint system. The sensor is located under the driver seat. The sensor determines whether the driver seat is fore or aft of a reference position and sends the seat position to the diagnostic module (SAS unit). The SAS unit is designed to control the deployment of the driver air bag depending on how close the driver seat is to the steering wheel.
The air bag/front seat belt pretensioner system warning light flashes if the sensor has a possible malfunction (page 2-59)(Air Bag/Front Seat Belt Pretensioner System Warning Light).

▼Front Passenger Seat Weight Sensors

Your vehicle is equipped with a front passenger seat weight sensors as a part of the supplemental restraint system. These sensors are located under both of the front passenger seat rails. These sensors determine the total seated weight on the front passenger seat. The SAS unit is designed to prevent the front passenger front and side air bags and seat belt pretensioner system from deploying if the total seated weight is less than approximately 30 kg (66 lb).
To reduce the chance of injuries caused by deployment of the front passenger air bag, the system deactivates the front passenger front and side air bags and also the seat belt pretensioner system when:

- There is no passenger in the front passenger seat. (The front passenger air bag deactivation indicator light does not illuminate.)
- The total seated weight on the front passenger seat is less than approximately 30 kg (66 lb). (The front passenger air bag deactivation indicator light illuminates.)

This system shuts off the front passenger front and side air bags and seat belt pretensioner system, so make sure the front passenger air bag deactivation indicator light illuminates according to the following table.

The air bag/front seat belt pretensioner system warning light flashes and the front passenger air bag deactivation indicator light illuminates if the sensors have a possible malfunction. If this happens, the front passenger front and side air bags and seat belt pretensioner system will not deploy.

Front passenger air bag deactivation indicator light

This indicator light illuminates to remind you that the front passenger front and side air bags and seat belt pretensioner will not deploy during a collision.

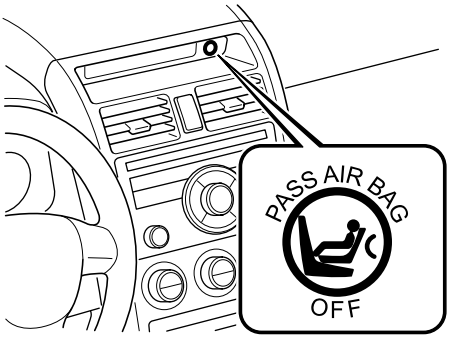

If the front passenger weight sensors are normal, the indicator light illuminates when the ignition switch is turned to the ON position. For a specified of time it goes out.

The front passenger air bag deactivation indicator light illuminates or is off under the following conditions:

Total seated weight on the front passenger seat	Front passenger air bag deactivation indicator light	Front passenger front and side air bags	Front passenger seat belt pretensioner system
Empty (Not occupied)*	OFF	Deactivated	Deactivated
Less than approx. 30 kg (66 lb)	ON	Deactivated	Deactivated
Approx. 42 kg (93 lb) or more	OFF	Ready	Ready

* If the front passenger seat belt is buckled, the front passenger air bag deactivation indicator light illuminates, however this does not indicate a malfunction.
Curtain air bag is ready for inflating despite the chart above.

If the front passenger air bag deactivation indicator light does not illuminate when the ignition switch is turned to the ON position and does not illuminate as indicated in the above chart, do not allow a child to sit in the front passenger seat and consult an Authorized Mazda Dealer as soon as possible. The system may not work properly in an accident.

WARNING

Do not decrease the total seated weight on the front passenger seat:

When an adult or large child sits on the front passenger seat, decreasing the total seated weight on the front passenger seat from the total seated weight of approximately 42 kg (93 lb) required for air bag deployment is dangerous. The front passenger seat weight sensors will detect the reduced total seated weight condition and the front passenger front and side air bags and seat belt pretensioner system will not deploy during an accident. The front passenger will not have the supplementary protection of the air bag, which could result in serious injury.

Decreasing the total seated weight on the front passenger seat from the total seated weight of approximately 42 kg (93 lb) could result in an air bag not deploying under the following conditions, for example:

- *A rear passenger pushes up on the front passenger seat with the feet.*
- *Luggage or other items placed under the front passenger seat or between the front passenger seat and driver seat that push up the front passenger seat bottom.*
- *The front passenger seat occupant sits in a manner that does not place the entire weight of the occupant on the seat such as by sitting too close to the door, grasping the assist grip or the rim of the moonroof and sitting with the seatback reclined too far.*
- *Any accessories which might decrease the total seated weight on the front passenger seat are attached to the front passenger seat.*

The front passenger front and side air bags and seat belt pretensioner systems will deactivate if the total seated weight on the front passenger seat is close to 30 kg (66 lb) and they will reactivate before the weight exceeds 42 kg (93 lb).

Do not increase the total seated weight on the front passenger seat:

When an infant or small child sits on the front passenger seat, increasing the total seated weight on the front passenger seat from the total seated weight of approximately 30 kg (66 lb) is dangerous. The front passenger seat weight sensors will detect the increased total seated weight, which could result in the unexpected deployment of the front passenger front and side air bags and seat belt pretensioner system in an accident and may cause serious injury. Increasing the total seated weight on the front passenger seat beyond the total seated weight of approximately 30 kg (66 lb) could result in the front passenger front and side air bags and seat belt pretensioner system deployment in an accident under the following conditions, for example:

- *Luggage or other items are placed on the seat with the child in the child-restraint system.*
- *A rear passenger or luggage push or pull down on the front passenger seatback.*
- *A rear passenger steps on the front passenger seat rails with the feet.*
- *Luggage or other items are placed on the seatback or hung on the head restraint.*
- *Heavy items are placed in the seatback map pocket.*
- *The seat is washed.*
- *Liquids are spilled on the seat.*
- *The front passenger seat is moved backward, pushing into luggage or other items placed behind it.*
- *The front passenger seatback contacts the second-row seat.*
- *Luggage or other items are placed between the front passenger seat and driver seat.*
- *Any accessories which might increase the total seated weight on the front passenger seat are attached to the front passenger seat.*

The front passenger front and side air bags and seat belt pretensioner systems will deactivate if the total seated weight on the front passenger seat is close to 30 kg (66 lb) and they will reactivate before the weight exceeds 42 kg (93 lb).

⚠ CAUTION

- *To assure proper deployment of the front air bag and to prevent damage to the sensors in the front seat bottoms:*
  - *Do not place sharp objects on the front seat bottoms or leave heavy luggage on them.*
  - *Do not spill any liquids on the front seats or under the front seats.*
- *To allow the sensors to function properly, always perform the following:*
  - *Adjust the front seats as far back as possible and always sit upright against the seatbacks with seat belts worn properly.*
  - *If you place your child on the front passenger seat, secure the child-restraint system properly and slide the front passenger seat as far back as possible (page 2-43).*

NOTE

- *The system requires about 10 seconds to alternate between turning the front passenger front and side air bags and seat belt pretensioner system on or off.*
- *The front passenger air bag deactivation indicator light may illuminate repeatedly if luggage or other items are put on the front passenger seat, or if the temperature of the vehicle's interior changes suddenly.*
- *The front passenger air bag deactivation indicator light may illuminate for 10 seconds if the total seated weight on the front passenger seat changes.*
- *If the front passenger air bag deactivation indicator light does not illuminate after installing a child-restraint system on the front passenger seat, install the child-restraint system on the rear seat and consult an Authorized Mazda Dealer as soon as possible.*

▼Driver and Front Passenger Buckle Switches

The buckle switches on the front seat belts detect whether or not the front seat belts are securely fastened and further control the deployment of the air bags.

Monitoring and Maintenance

▼Constant Monitoring

The following components of the air bag systems are monitored by a diagnostic system:

- SAS unit
- Front air bag sensor
- Air bag modules
- Side crash sensors
- Air bag/Front seat belt pretensioner system warning light
- Front seat belt pretensioners
- Front passenger air bag deactivation indicator light
- Related wiring
- Driver seat slide position sensor
- Front passenger seat weight sensors

The diagnostic module continuously monitors the system's readiness. This begins when the ignition switch is turned to the ON position and continues while the vehicle is being driven.

▼Maintenance

The air bag systems do not require regular maintenance. But if any of the following occurs, take your vehicle to an Authorized Mazda Dealer as soon as possible:

- The air bag system warning light flashes.
- The air bag system warning light remains illuminated.
- The air bag system warning light does not illuminate when the ignition switch is turned to the ON position.
- The air bag system warning beep sound will be heard.
- The air bags have deployed.
- Front passenger air bag deactivation indicator light does not illuminate when the ignition switch is turned to the ON position or does not illuminate as indicated in the chart. For more details about this indicator light and this chart, refer to “Front passenger seat weight sensors” (page 2-63).

WARNING

Do not operate a vehicle with damaged air bag/seat belt pretensioner system components:

Expended or damaged air bag/seat belt pretensioner system components must be replaced after any collision which caused them to deploy or damage them. Only a trained Authorized Mazda Dealer can fully evaluate these systems to see that they will work in any subsequent accident. Driving with an expended or damaged air bag or pretensioner unit will not afford you the necessary protection in the event of any subsequent accident which could result in serious injury or death.

Do not remove interior air bag parts:

Removing any components such as the front seats, front dashboard, the steering wheel or parts on the front and rear window pillars and along the roof edge, containing air bag parts or sensors is dangerous. These parts contain essential air bag components. The air bag could accidentally activate and cause serious injuries. Always have an Authorized Mazda Dealer remove these parts.

Dispose of the air bag properly:

Improper disposal of an air bag or a vehicle with live air bags in it can be extremely dangerous. Unless all safety procedures are followed, injury can result. Ask an Authorized Mazda Dealer how to safely dispose of an air bag or how to scrap an air bag equipped vehicle.

NOTE

If it becomes necessary to have the components or wiring system for the supplementary restraint system modified to accommodate a person with certain medical conditions in accordance with a certified physician, contact an Authorized Mazda Dealer, refer to "Customer Assistance (U.S.A.)" (page 9-2).

3 Knowing Your Mazda

Explanation of basic operations and controls; opening/closing and adjustment of various parts.

Advanced Keyless Entry and Start System 3-2
Advanced Keys* 3-2
Operation Using Advanced Keyless Functions 3-7
Operation Using Advanced Key Functions 3-13
Advanced Key Suspend Function 3-16
Warning and Beep Sounds 3-16
Setting Change (Function Customization) 3-19
When Warning Indicator/Beep is Activated 3-20

Doors and Locks 3-21
Keys 3-21
Keyless Entry System* 3-22
Door Locks 3-25
Liftgate 3-28
Power Windows 3-35
Fuel-Filler Lid and Cap 3-42
Hood 3-43
Moonroof* 3-44

Security System 3-50
Immobilizer System (with Advanced Key) 3-50
Immobilizer System (without Advanced Key) 3-52
Theft-Deterrent System* 3-55

Steering Wheel and Mirrors 3-57
Steering Wheel 3-57
Mirrors 3-57

*Some models.

Advanced Keys*

The advanced keyless functions (advanced keyless entry and start system) enables the following operations while the advanced key is being carried (page 3-7).
- Locking/unlocking the doors and the liftgate without operating the key.
- Starting the engine without operating the key.

The advanced key enables additional functions other than those with the advanced keyless functions (page 3-13).
- The following operations are possible using the transmitter of the keyless entry system from a distance (Lock/Unlock/Panic/Liftgate* button):
  - Locking/unlocking the doors and the liftgate.
  - Opening/closing the power liftgate*.
  - Opening the power windows and the moonroof.
  - Operating the theft-deterrent system*.
  - Turning on the alarm.
- Locking/unlocking the doors or starting the engine using the auxiliary key.

⚠ WARNING

Do not leave the keys in your vehicle with children and keep them in a place where your children will not find or play with them:

Leaving children in a vehicle with the key is dangerous. This could result in someone being badly injured or even killed. These new kinds of keys are fascinating to children. They could play with power windows or other controls, or even make the vehicle move.

Radio waves from the advanced key may affect medical equipment such as pacemakers:

Before using the advanced key near people who use medical equipment, ask the medical equipment manufacturer or your physician if radio waves from the advanced key will affect the equipment.

NOTE
- *The driver must carry the advanced key to ensure the system functions properly.*
- *Refer to Immobilizer System (page 3-50) for information regarding keys and engine starting.*
- ***(With theft-deterrent system)***
  Refer to Theft-Deterrent System (page 3-55) for information regarding keys and the prevention of vehicle and vehicle contents theft.

 *Some models.

With power liftgate button

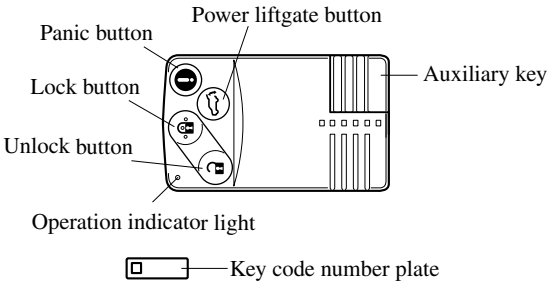

Without power liftgate button

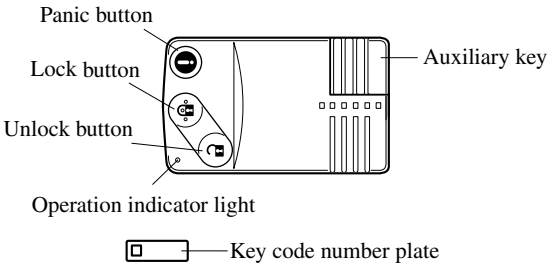

A code number is stamped on the plate attached to the key set; detach this plate and store it in a safe place (not in the vehicle) for use if you need to make a replacement key.

Also write down the code number and keep it in another safe and handy place, but not in the vehicle.

If your key is lost, consult your Authorized Mazda Dealer with the code number ready.

⚠ CAUTION

- *Because the advanced key uses low-intensity radio waves, it may not function correctly under the following conditions:*
  - *The advanced key is carried with communication devices such as cellular phones.*
  - *The advanced key contacts or is covered by a metal object.*
  - *The advanced key is near electronic devices such as personal computers.*
  - *Non-Mazda genuine electronic equipment is installed in the vehicle.*
  - *There is equipment which discharges radio waves near the vehicle.*
  - *If the vehicle is near equipment such as wireless pay devices installed at certain gas stations.*
- *The advanced key may consume battery power excessively if it receives high-intensity radio waves. Do not place the advanced key near electronic devices such as televisions or personal computers.*
- *To avoid damage to the advanced key, DO NOT:*
  - *Drop the advanced key.*
  - *Get the advanced key wet.*
  - *Disassemble the advanced key.*
  - *Expose the advanced key to high temperatures on places such as the dashboard or hood, under direct sunlight.*
  - *Place heavy objects on the advanced key.*
  - *Put the advanced key in an ultrasonic cleaner.*
  - *Put any magnetized objects close to the advanced key.*

NOTE

- *Battery life is about one year. Replace the battery when the KEY indicator light (green) flashes in the instrument cluster.*
  Refer to Advanced Key Battery Dead Warning on page 3-17.
- *Additional advanced keys can be obtained at an Authorized Mazda Dealer. Up to 6 advanced keys can be used with the advanced keyless functions per vehicle.*

▼Advanced Key Maintenance

⚠ CAUTION

- *Make sure the battery is installed with the correct pole facing upward. Battery leakage could occur if it is not installed correctly.*
- *When replacing the battery, be careful not to bend the electrical terminals or get oil on them. Also be careful not to get dirt in the transmitter as it could be damaged.*
- *There is the danger of explosion if the battery is not correctly replaced.*
- *Replace only with the same type battery (CR2025 or equivalent).*
- *Dispose of used batteries according to the following instructions.*
  - *Insulate the plus and minus terminals of the battery using cellophane or equivalent tape.*
  - *Never disassemble.*
  - *Never throw the battery into fire or water.*
  - *Never deform or crush.*

The following conditions indicate that the battery power is low:

- The KEY indicator light (green) flashes in the instrument cluster when the engine is turned off.
- The system does not operate and the operation indicator light on the transmitter does not flash when the buttons are pressed.
- The system's operational range is reduced.

Replacing the battery at an Authorized Mazda Dealer is recommended to prevent damage to the advanced key. If replacing the battery by yourself, follow the instruction below.

Replacing the advanced key battery

1. Pull out the auxiliary key.

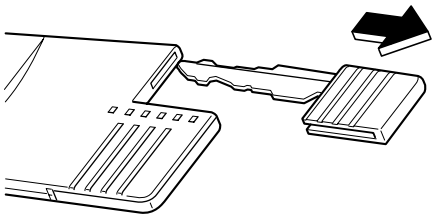

2. Release the cap using a flathead screwdriver, then rotate and remove the cap.

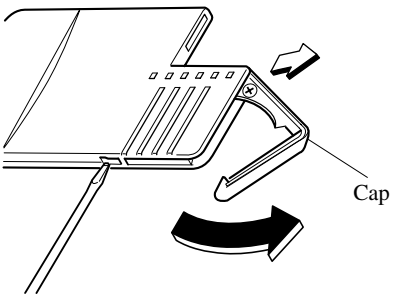

⚠ CAUTION

Do not turn the cap excessively. The cap may be damaged.

3. Insert a flathead screwdriver into the crack and press the battery out.

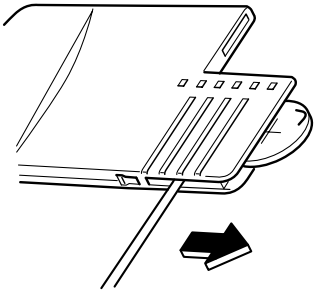

4. Insert the new battery (CR2025 or equivalent) with the positive pole (+) facing the (+) mark on the cap.

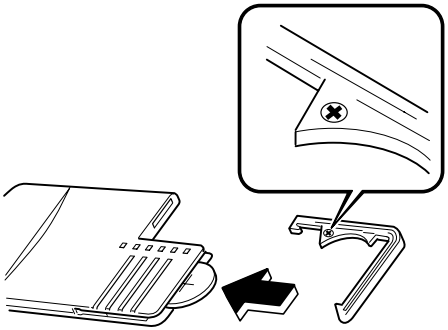

5. Rotate and close the cap.

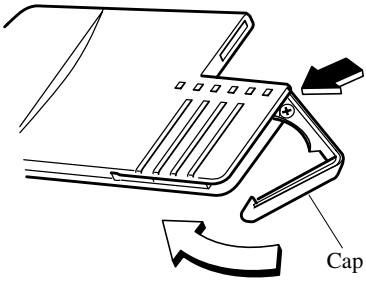

6. Reinsert the auxiliary key.

▼Service

If you have a problem with the advanced keyless functions, consult an Authorized Mazda Dealer.

If your advanced key is lost or stolen, bring all remaining advanced keys to an Authorized Mazda Dealer as soon as possible for a replacement and to make the lost or stolen advanced key inoperative.

⚠ CAUTION

Radio equipment like this is governed by laws in the United States. Changes or modifications not expressly approved by the party responsible for compliance could void the user's authority to operate the equipment.

Operation Using Advanced Keyless Functions

▼Operational Range

The system operates only when the driver is in the vehicle or within operational range while the advanced key is being carried.

NOTE
When the battery power is low, or in places where there are high-intensity radio waves or noise, the operational range may become narrower or the system may not operate.

Locking, unlocking the doors and the liftgate

The operational range for locking/unlocking the doors is an area of up to 80 cm (2.6 ft) from the center of the front door handles.
The operational range for locking/unlocking the liftgate is an area of up to 80 cm (2.6 ft) from the center of the liftgate.

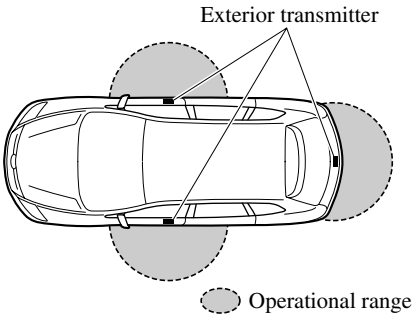

NOTE
The system may not operate if you are too close to the windows, door handles, or liftgate.

Starting the engine

The operational range for starting the engine includes nearly the entire cabin area except for the luggage compartment.

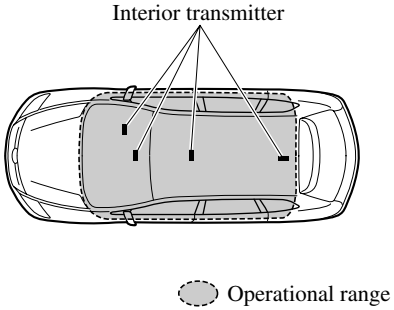

NOTE
- *The luggage compartment is out of the operational range, however, starting the engine may be possible.*
- *The engine may not start if the advanced key is placed in the following areas:*
  - *Around the dashboard*
  - *In the storage compartments such as the glove box*
- *Starting the engine may be possible even if the advanced key is outside of the vehicle and extremely close to a door and window, however, always start the engine from the driver's seat.*
  If the vehicle is started and the advanced key is not in the vehicle, the vehicle will not restart after it is shut off and the ignition switch is turned to the lock position.
- *If the advanced key is detected within operational range, the operation indicator light located in the instrument cluster flashes momentarily.*

▼Locking, Unlocking with Request Switch

All doors and the liftgate can be locked/unlocked by pressing the request switch on the front doors or the liftgate while the advanced key is being carried.

Front doors

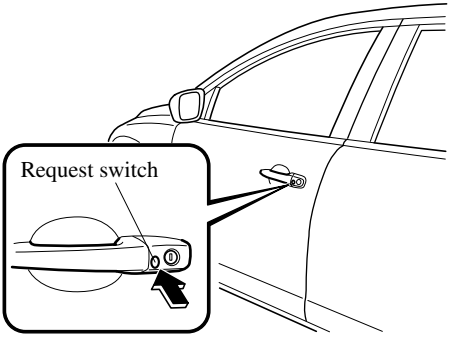

Liftgate

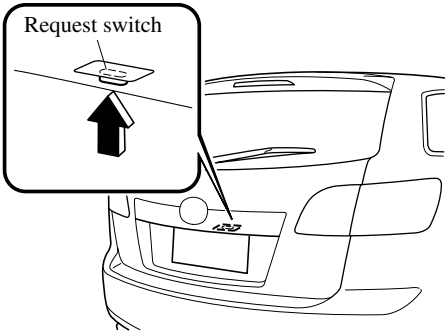

To lock

To lock the doors and the liftgate, press the request switch. A beep sound will be heard once and the hazard warning lights will flash once.

NOTE

(Without theft-deterrent system)

The hazard warning lights will flash once to indicate that the doors and the liftgate are locked.

(With theft-deterrent system)

- *The hazard warning lights will not flash.*
- *The hazard warning lights only flash when the theft deterrent system is armed or turned off, refer to the theft-deterrent system (page 3-55).*

To unlock

Driver's door request switch

To unlock the driver's door, press the request switch. A beep sound will be heard twice and the hazard warning lights will flash twice.
To unlock all doors and the liftgate, press the request switch again within 3 seconds and two more beep sounds will be heard.

NOTE

(Without theft-deterrent system)

The hazard warning lights will flash twice to indicate that the doors and the liftgate are unlocked.

(With theft-deterrent system)

- *The hazard warning lights will not flash.*
- *The hazard warning lights only flash when the theft deterrent system is armed or turned off, refer to the theft-deterrent system (page 3-55).*

Front passenger door/liftgate request switch

To unlock the doors and the liftgate, press the request switch. A beep sound will be heard twice and the hazard warning lights will flash twice.

NOTE

- *The request switch on the driver's door can be used to close the power windows and the moonroof.*
  Refer to the following pages:
  Opening/Closing the Power Windows (page 3-39)
  Opening/Closing the Moonroof (page 3-46)
- *Confirm that all doors and the liftgate are securely locked.*
- *All doors and the liftgate cannot be locked when any door or the liftgate is open.*
- *A beep sound is heard for confirmation when the doors and the liftgate are locked/ unlocked using the request switch. If your prefer, the beep sound can be turned off (page 3-19).*
- *The setting can be changed so that the doors and the liftgate are locked automatically without pressing the request switch (page 3-19).*
  (Auto-lock function)
  A beep sound is heard when all doors and the liftgate are closed while the advanced key is being carried. All doors and the liftgate are locked automatically after about 3 seconds when the advanced key is out of the operational range. Also, the hazard warning lights flash once. (Even if the driver is in the operational range, all doors and the liftgate are locked automatically after about 30 seconds.)
  If you are out of the operational range before the doors and the liftgate are completely closed or another advanced key is left in the vehicle, the auto-lock function will not work. Always make sure that all doors and the liftgate are closed and locked before leaving the vehicle.
- ***(Auto re-lock function)***
  After unlocking doors and the liftgate by pressing the request switch, all doors and the liftgate will automatically lock if any of the following operations are not performed within about 30 seconds. If your vehicle has a theft-deterrent system, the hazard warning lights will flash for confirmation.
  - *A door or the liftgate is opened.*
  - *The auxiliary key is inserted into the ignition switch.*
  - *The start knob is pushed.*

▼Starting the Engine

Ignition switch positions

Without a traditional key, some of the ignition switch functions are different.

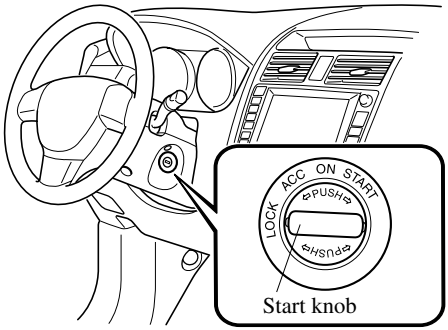

LOCK (Released)

The steering wheel locks to help protect against theft.

LOCK (Depressed)

The ignition switch can be turned to the ACC position when the KEY indicator light (green) illuminates in the instrument cluster.

WARNING

Before leaving the driver's seat, always put the key or start knob to LOCK position, set the parking brake and make sure the shift lever is in P:

Intentionally placing the key or start knob into LOCK position is much more important where you will not be removing the key to leave the vehicle and because leaving it in other positions will disable some of the vehicle security systems and run the battery down.
Leaving the driver's seat without putting the ignition switch in LOCK position, setting the parking brake and the shift lever is in P is dangerous. Unexpected vehicle movement could occur. This could cause an accident.

NOTE

- *If turning the ignition switch is difficult, jiggle the steering wheel from side to side.*
- *The ignition switch cannot be turned from the ACC position to the LOCK position when the shift lever is not in P.*

ACC (Accessory)

The steering wheel unlocks and some electrical accessories will operate.

NOTE

The Advanced Keyless Entry System does not function in the ACC position, and the doors will not lock/unlock using the transmitter or request switches even if the advanced key is carried away from the vehicle.

ON

This is the normal running position after the engine is started. The warning lights (except brakes) should be inspected before the engine is started (page 5-41).

NOTE

When the ignition switch is turned to the ON position, the sound of the fuel pump motor operating near the fuel tank can be heard. This does not indicate an abnormality.

START

The engine is started in this position. It will crank until you release the start knob; then it returns to the ON position. The brake warning light can be checked after the engine is started (page 5-41).

Starting the engine

NOTE

- *Engine-starting is controlled by the spark ignition system.*
  This system meets all Canadian Interference-Causing Equipment Standard requirements regulating the impulse electrical field strength of radio noise.
- *The advanced key must be carried because the advanced key carries an immobilizer chip that must communicate with the engine controls at short range.*
- *When starting the engine, be sure the start knob is securely attached before trying to operate it. If the knob becomes detached from the ignition switch, re-attach it by pushing it on to the ignition switch.*

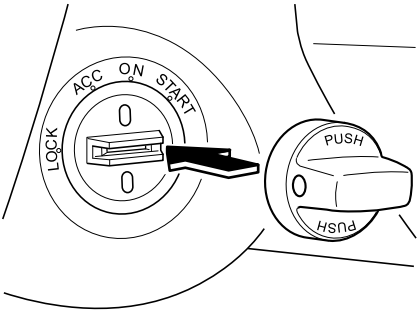

1. Make sure the advanced key is being carried.
2. Occupants should fasten their seat belts.
3. Make sure the parking brake is on.
4. Depress the brake pedal.
5. Put the vehicle in park (P). If you must restart the engine while the vehicle is moving, shift into neutral (N).

NOTE
The starter will not operate if the shift lever is not in P or N.

6. Push the start knob slowly all the way in.

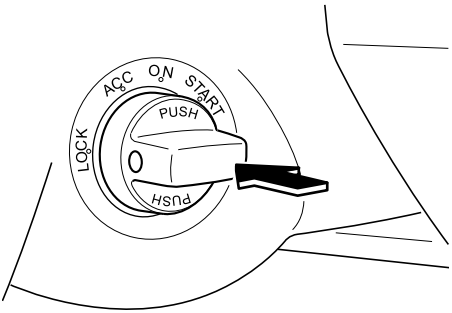

7. Verify that the KEY indicator light (green) illuminates in the instrument cluster. The KEY warning light (red) means you cannot continue to start the engine using the Advanced Keyless System. You may have to use the auxiliary key instead (page 3-20).

NOTE
In the following cases, the KEY warning light (red) illuminates and the engine will not start.
- *The advanced key battery is dead.*
- *The advanced key is out of operational range.*
- *The advanced key is placed in areas where it is difficult for the system to detect the signal (page 3-7).*
- *A key from another manufacturer similar to the advanced key is in the operational range.*

8. Turn the ignition switch to the ACC position while pushing the start knob in.

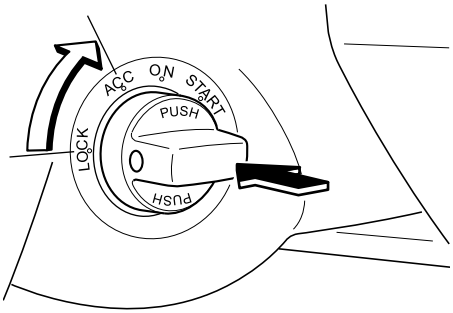

9. Turn the ignition switch from the ACC position to the START position and hold (up to 10 seconds at a time) until the engine starts.

⚠ CAUTION

Don't try the starter for more than 10 seconds at a time. If the engine stalls or fails to start, wait 10 seconds before trying again. Otherwise, you may damage the starter and drain the battery.

10. After starting the engine, let it idle for about 10 seconds.

NOTE

- *In extremely cold weather, below –18° C (0° F), or after the vehicle has not been driven in several days, let the engine warm up without operating the accelerator.*
- *Whether the engine is cold or warm, it should be started without use of the accelerator.*

Turning off the engine

1. Move the shift lever to the P position.
2. Turn the ignition switch from the ON position to the ACC position.

NOTE

When the engine is turned off and the ignition switch it turned from the ACC position to the LOCK position, the KEY indicator light (green) flashes in the instrument cluster for about 30 seconds if the battery power of the advanced key is low. Replace the battery with a new one.
Refer to Battery Replacement (page 3-6).

3. Push in the start knob from the ACC position and turn it to the LOCK position.

⚠ CAUTION

When leaving the vehicle, make sure the ignition switch is turned to the LOCK position.

NOTE

- *When turning the ignition switch to the LOCK position, the ignition switch has to be pushed in from the ACC position and turned. Without being pushed in, the ignition switch stops at the ACC position and the vehicle battery may be discharged if the ignition switch is left in the ACC position. When leaving the vehicle, make sure the ignition switch is turned to the LOCK position.*
- *If the vehicle is left with the ignition switch not in the LOCK position, a beep sound is heard and the indicator light flashes to notify the driver.*
  Refer to Warning Beep (page 3-16).

Operation Using Advanced Key Functions

▼Keyless Entry System

This system uses the more traditional key buttons to remotely lock and unlock the doors and the liftgate, and opens the power windows and the moonroof.
It can also help you signal for attention.
Press the buttons slowly and carefully.

NOTE

- *The keyless entry system is designed to operate up to about 2.5 m (8 ft) from the center of the vehicle, but this may vary due to local conditions.*
- *The system does not operate when the ignition switch is not in the LOCK position or the start knob is pushed in.*
- *With the start knob installed in the LOCK position, the system is fully operational. If the ignition switch is not in the LOCK position or the start knob is pushed in, the system does not operate.*
- *All doors and the liftgate cannot be locked by pressing the lock button while any door or the liftgate is open. The hazard warning lights will also not flash.*
- *If the transmitter does not operate when pressing a button or the operational range becomes too small, the battery may be dead. To install a new battery, refer to Maintenance (page 3-5).*

Transmitter

with power liftgate

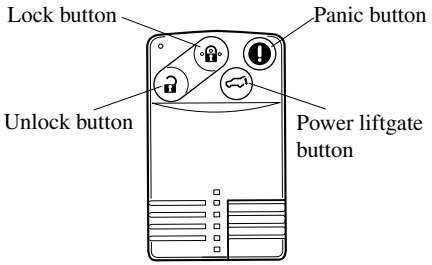

without power liftgate

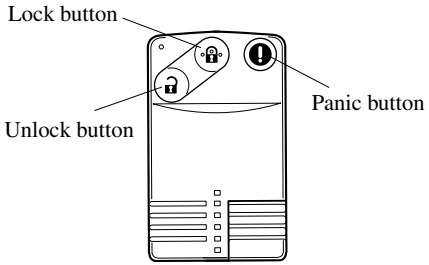

NOTE

- ***(U.S.A.)***
  This device complies with Part 15 of the FCC Rules. Operation is subject to the following two conditions: (1) this device may not cause harmful interference, and (2) this device must accept any interference received, including interference that may cause undesired operation.
- ***(CANADA)***
  This device complies with RSS-210 of Industry CANADA. Operation is subject to the following two conditions: (1) this device may not cause interference, and (2) this device must accept any interference, including interference that may cause undesired operation of the device.

NOTE

The unlock button can be used to open the power windows and the moonroof, but the lock button cannot be used to close the power windows and the moonroof.
Refer to the following pages:
Opening/Closing the Power Windows (page 3-39)
Opening/Closing the Moonroof (page 3-46)

The operation indicator light flashes when the buttons are pressed.

Lock button

To lock the doors and the liftgate, press the lock button. A beep sound will be heard once and the hazard warning lights will flash once.

To confirm that all doors and the liftgate have been locked, press the lock button again within 5 seconds. If they are closed and locked, the horn will sound.

NOTE

(Without theft-deterrent system)
The hazard warning lights will flash once to indicate that all doors and the liftgate are locked.
(With theft-deterrent system)

- *The hazard warning lights will not flash.*
- *The hazard warning lights only flash when the theft deterrent system is armed or turned off, refer to the theft-deterrent system (page 3-55).*

NOTE

- *All doors and the liftgate cannot be locked when any door or the liftgate is open.*
- *Confirm that all doors and the liftgate are locked visually or audibly by use of the double click.*

Unlock button

To unlock the driver's door, press the unlock button. A beep will be heard twice and the hazard warning lights will flash twice.

To unlock all doors and the liftgate, press the unlock button again within 3 seconds and two more beep sounds will be heard.

NOTE

(Without theft-deterrent system)
The hazard warning lights will flash twice to indicate that all doors and the liftgate are unlocked.
(With theft-deterrent system)

- *The hazard warning lights will not flash.*
- *The hazard warning lights only flash when the theft deterrent system is armed or turned off, refer to the theft-deterrent system (page 3-55).*

NOTE
Auto re-lock function
After unlocking with the transmitter, all doors and the liftgate will automatically lock if one of the doors or the liftgate is not opened within about 30 seconds.

Power liftgate button

If your Mazda has a power liftgate (page 3-30), the transmitter can open/close the liftgate.

Panic button

If you witness from a distance someone attempting to break into or damage your vehicle, pressing the panic button will activate the vehicle's alarm.

NOTE
The panic button will work whether any door or the liftgate is open or closed.

(Turning on the alarm)
Pressing the panic button for 1 second or more will trigger the alarm for about 2 minutes and 30 seconds, and the following will occur:
- The horn sounds intermittently.
- The hazard warning lights flash.

(Turning off the alarm)
The alarm stops by pressing any button on the transmitter.

▼Auxiliary Key Function

Use the auxiliary key stored in the advanced key in the event of a dead transmitter battery or malfunction.

Removing the auxiliary key

Pull out the auxiliary key from the advanced key.

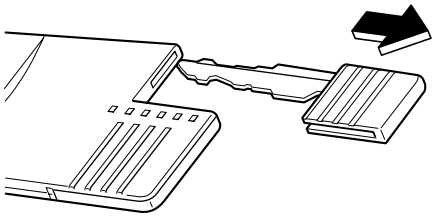

Locking, unlocking the doors

The doors can be locked/unlocked using the auxiliary key, refer to Locking, Unlocking with Key (page 3-26).

Starting the engine

The engine can be started with the auxiliary key, refer to Ignition Switch (page 5-2).

Locking, unlocking the glove box

The glove box can be locked/unlocked using the auxiliary key, refer to Glove Box (page 6-128).

Advanced Key Suspend Function

If one advanced key is left in the vehicle and a second advanced key is used to lock it, the functions of the advanced key left in the vehicle is temporarily suspended to prevent theft of the vehicle.
The following are inoperable:
- Starting the engine using the start knob.
- Operating the request switches.

To restore these functions, perform any one of the following:
- Press the lock or unlock button on the advanced key which has had its functions temporarily suspended.
- While carrying another advanced key, push in the start knob until the KEY indicator light (green) illuminates.
- Insert the auxiliary key and turn the ignition switch to the ON position.

Warning and Beep Sounds

▼System Malfunction Warning Beep

If any malfunction occurs in the advanced keyless function, the KEY warning light (red) in the instrument cluster illuminates continuously and beep sounds will be heard.

⚠ CAUTION

If the KEY warning light (red) remains illuminated, do not continue to drive the vehicle with the advanced keyless function. Park the vehicle in a safe place and use the auxiliary key to continue driving the vehicle. Have the vehicle inspected at an Authorized Mazda Dealer as soon as possible. Refer to Ignition Switch (page 5-2).

▼Start Knob Not in LOCK Warning Beep

If the start knob is in the ACC position and the driver's door is opened, a continuous beep sound will be heard to notify the driver that the start knob has not been returned to the LOCK position. In this case, the keyless entry system does not operate, the car cannot be locked, and the battery will run down.

▼Advanced Key Removed from Vehicle Warning Beep

Under the following conditions, a beep sound will be heard and the KEY warning light (red) will flash continuously when the start knob has not been returned to the LOCK position to notify the driver that the advanced key has been removed. The KEY warning light (red) will stop flashing when the advanced key is back inside the vehicle:

- The start knob has not been returned to the LOCK position, the driver's door is open, and the advanced key is removed from the vehicle. (A beep sound will be heard 3 times.)
  However the beep sound will be heard continuously when the start knob is in the ACC position and the door is open due to the activation of the warning beep sound indicating that the start knob is not in the LOCK position.
- The start knob has not been returned to the LOCK position and all the doors are closed after removing the advanced key from the vehicle. (A beep sound will be heard 6 times.)

NOTE

Because the advanced key utilizes low-intensity radio waves, the Advanced Key Removed From Vehicle Warning may activate if the advanced key is carried together with a metal object or it is placed in a poor signal reception area.

▼Request Switch Inoperable Warning Beep

Under the following conditions, if the request switch for a front door or the liftgate is pressed while the advanced key is being carried, a beep will be heard 6 times to indicate that the front doors and the liftgate cannot be locked.

- A door or the liftgate is open (door ajar included).
- The start knob has not been returned to the LOCK position.
- The auxiliary key is inserted into the ignition switch.

▼Advanced Key Battery Dead Warning

When the start knob is returned to the ACC or LOCK position from the ON position, the KEY indicator light (green) flashes for approximately 30 seconds indicating that the remaining battery power is low. Replace with a new battery before the advanced key becomes unusable.
Refer to Advanced Key Maintenance (page 3-5).

NOTE

The advanced key can be set so that the KEY indicator light (green) does not flash even if the battery power is low.
Refer to Setting Change (page 3-19).

▼Engine Start Not Permitted Warning

Under the following conditions, the KEY warning light (red) flashes to inform the driver that the start knob will not rotate to the ACC position even if it is pushed in from the LOCK position.

- The advanced key battery is dead.

- The advanced key is not within operational range.
- The advanced key is placed in areas where it is difficult for the system to detect the signal (page 3-7).
- A key from another manufacturer similar to the advanced key is in the operational range.

▼Advanced Key Left-in-vehicle Warning Beep

If an advanced key is left in the vehicle cabin and all the doors and the liftgate are locked using a separate advanced key, a beep sound is heard for about 10 seconds to remind the driver that the advanced key has been left in the vehicle cabin. If this happens, the doors and the liftgate lock but the functions of the advanced key left in the vehicle cabin may be temporarily suspended. Perform the following procedure to restore the functions of the advanced key (page 3-16).

Setting Change (Function Customization)

The following function settings are possible. These settings can only be changed by an Authorized Mazda Dealer.

Setting	Function	At Initial Setting	After Setting Change
Advanced key battery dead indicator	KEY indicator light (green) flashes to indicate that the advanced key battery power is low.	Activated	Deactivated
Lock/unlock operation confirmation beep sound*1	A beep sound is heard to confirm that all doors or the liftgate have been locked/unlocked.	Activated	Deactivated
Autolock function*2	When all doors and the liftgate are closed and the advanced key is being carried and out of operational range, all the doors and the liftgate automatically lock after 3 seconds. (Even if the driver is in the operational range, all doors and the liftgate are locked automatically after about 30 seconds.)	Deactivated	Activated

*1: When the autolock function is operating, the warning sound will be heard regardless of the setting.
*2: When Autolock function is enabled, windows will not automatically close. You must close before leaving vehicle.

When Warning Indicator/Beep is Activated

Under the following conditions, warning beeps are heard and a warning/indicator light in the instrument cluster illuminates to notify the driver of improper operation of the advanced key to prevent theft of the vehicle (page 3-16).

Warning	How to check
When a door is open, a continuous beep sound will be heard.	Check whether the start knob has been returned to the LOCK position.
When a door is open, 3 beep sounds are heard, and the KEY warning light (red) in the instrument cluster flashes.	Check whether the advanced key has been removed from the vehicle.
When a door is closed, a beep sound is heard 6 times, and the KEY warning light (red) in the instrument cluster flashes.	Check whether the advanced key has been removed from the vehicle.
When locking the doors, the chime sounds for about 10 seconds.	Check whether the advanced key has been left in the vehicle.
When attempting to lock the doors, a beep sound is heard 6 times.	Check whether the advanced key has been left in the vehicle.
	Check whether the start knob has been returned to the LOCK position.
	Check whether a door or the liftgate is open.
When the KEY indicator light (green) flashes in the instrument cluster.	The advanced key battery power is low. Replace the battery with a new one. Refer to Advanced Key Maintenance on page 3-5.
When the KEY warning light (red) remains illuminated in the instrument cluster.	The advanced key is malfunctioning. Park the vehicle in a safe place, and use the auxiliary key to continue driving the vehicle. Have the vehicle inspected at an Authorized Mazda Dealer as soon as possible.

Keys

WARNING

Do not leave the keys in your vehicle with children and keep them in a place where your children will not find or play with them:

Leaving children in a vehicle with the key is dangerous. This could result in someone being badly injured or even killed. These new kinds of keys are fascinating to children. They could play with power windows or other controls, or even make the vehicle move.

NOTE

- *Refer to Immobilizer System (page 3-52) for information regarding keys and engine starting.*
- ***(With theft-deterrent system)***
  Refer to Theft-Deterrent System (page 3-55) for information regarding keys and the prevention of vehicle and vehicle contents theft.

The keys operate all locks.

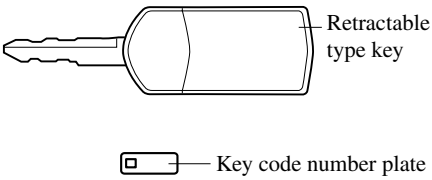

A code number is stamped on the plate attached to the key set; detach this plate and store it in a safe place (not in the vehicle) for use if you need to make a replacement key.

NOTE

Write down the code number and keep it in a separate safe and convenient place, but not in the vehicle.
If your key is lost, consult your Authorized Mazda Dealer and have your code number ready.

Key extend/retract method (Retractable type key)

To extend the key, press the release button.

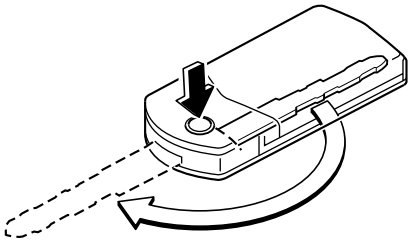

To retract the key, rotate it into the holder while pressing the release button.

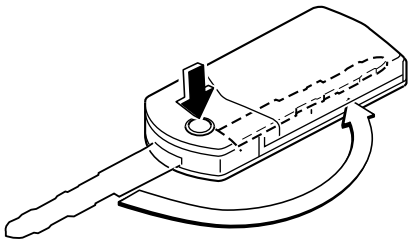

Keyless Entry System*

This system remotely locks and unlocks the doors and the liftgate, and opens the power windows and the moonroof.
It can also help you signal for attention.
Press the buttons slowly and carefully.

CAUTION

To avoid damage to the transmitter, do not:
- *Drop the transmitter.*
- *Get the transmitter wet.*
- *Disassemble the transmitter.*
- *Expose the transmitter to any kind of magnetic field.*
- *Expose the transmitter to high temperatures on places such as the dashboard or hood, under direct sunlight.*

NOTE
- *The keyless entry system is designed to operate up to about 2.5 m (8 ft) from the center of the vehicle, but this may vary due to local conditions.*
- *The system doesn't operate when the key is in the ignition switch.*
- *Doors and the liftgate cannot be locked by pressing the lock button while any other door or the liftgate is open. Also, the hazard warning lights will not flash.*
- *If the transmitter does not operate when pressing a button or the operation range becomes too small, the battery may be dead. To install a new battery, refer to Maintenance (page 3-24).*
- *Additional transmitters can be obtained at an Authorized Mazda Dealer. Up to 3 transmitters can be used with the keyless entry system per vehicle. Bring all transmitters to an Authorized Mazda Dealer when additional transmitters are required.*

▼Transmitter

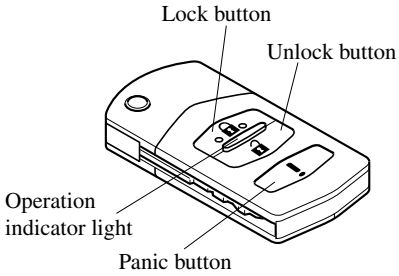

NOTE
- ***(U.S.A.)***
  This device complies with Part 15 of the FCC Rules. Operation is subject to the following two conditions: (1) this device may not cause harmful interference, and (2) this device must accept any interference received, including interference that may cause undesired operation.
- ***(CANADA)***
  This device complies with RSS-210 of Industry CANADA. Operation is subject to the following two conditions: (1) this device may not cause interference, and (2) this device must accept any interference, including interference that may cause undesired operation of the device.

NOTE
The unlock button can be used to open the power windows and the moonroof, but the lock button cannot be used to close the power windows and the moonroof.
Refer to the following pages:
Opening/Closing the Power Windows (page 3-39)
Opening/Closing the Moonroof (page 3-46)

The operation indicator light flashes when the buttons are pressed.

*Some models.

Lock button

To lock the doors and the liftgate, press the lock button and the hazard warning lights will flash once.

To confirm that all doors and the liftgate have been locked, press the lock button again within 5 seconds. If they are closed and locked, the horn will sound.

NOTE

- ***(Without theft-deterrent system)***
  The hazard warning lights will flash once to indicate that all doors and the liftgate are locked.
- ***(With theft-deterrent system)***
  - *The hazard warning lights will not flash.*
  - *The hazard warning lights only flash when the theft deterrent system is armed or turned off, refer to the theft-deterrent system (page 3-55).*

NOTE

- *All doors and the liftgate cannot be locked when any door or the liftgate is open and the key is in the ignition switch.*
- *Confirm that all doors and the liftgate are locked visually or audibly by use of the double click.*

Unlock button

To unlock the driver's door, press the unlock button and the hazard warning lights will flash twice.

To unlock all doors and the liftgate, press the unlock button again within 3 seconds.

NOTE

(Without theft-deterrent system)
The hazard warning lights will flash twice to indicate that all doors and the liftgate are unlocked.

(With theft-deterrent system)

- *The hazard warning lights will not flash.*
- *The hazard warning lights only flash when the theft deterrent system is armed or turned off, refer to the theft-deterrent system (page 3-55).*

NOTE

Auto re-lock function
After unlocking with the transmitter, all doors and the liftgate will automatically lock if one of the doors or the liftgate is not opened within about 30 seconds.

Panic button

If you witness from a distance someone attempting to break into or damage your vehicle, pressing the panic button will activate the vehicle's alarm.

NOTE

The panic button will work whether any door or the liftgate is open or closed.

Turning on the alarm

Pressing the panic button once will trigger the alarm for about 2 minutes and 30 seconds, and the following will occur:

- The horn sounds intermittently.
- The hazard warning lights flash.

Turning off the alarm

Press any button on the transmitter.

▼Transmitter Maintenance

If the buttons on the transmitter are inoperable and the operation indicator light does not flash, the battery may be dead.
Replace with a new battery before the transmitter becomes unusable.

⚠ CAUTION

- *Install the battery with the positive pole (+) facing down. Battery leakage could occur if it is not installed correctly.*
- *When replacing the battery, be careful not to bend the electrical terminals or get oil on them. Also be careful not to get dirt in the transmitter as it could be damaged.*
- *There is the danger of explosion if the battery is not correctly replaced.*
- *Replace only with the same type battery (CR1620 or equivalent).*
- *Dispose of used batteries according to the following instructions.*
  - *Insulate the plus and minus terminals of the battery using cellophane or equivalent tape.*
  - *Never disassemble.*
  - *Never throw the battery into fire and/or water.*
  - *Never deform or crush.*

Replacing the transmitter battery

1. Unfold the key (page 3-21).
2. Insert a screwdriver into the slot and push the tab to remove the key from the transmitter.

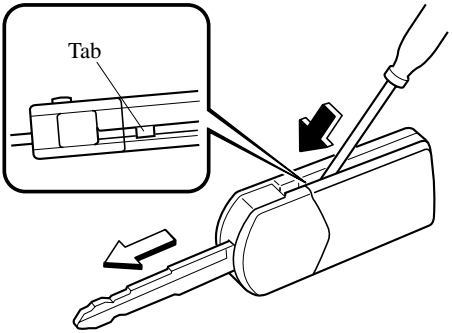

3. Insert a screwdriver into the slot and gently pry open the transmitter.

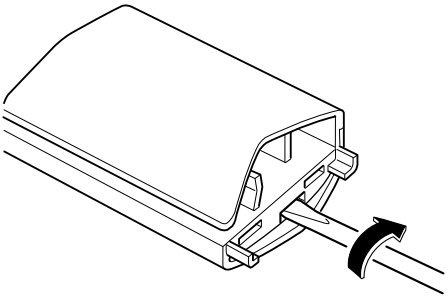

4. Remove the battery.

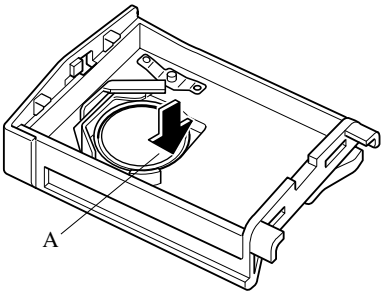

5. Put in the new battery (CR1620 or equivalent) with the positive pole (+) facing down.

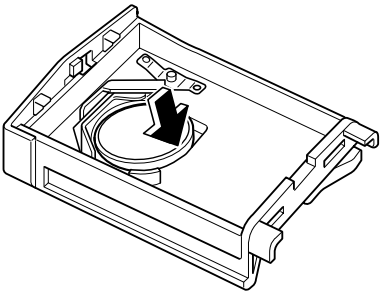

6. Align the front and back covers and snap the transmitter shut.
7. Install the key to the transmitter.

▼Service

If you have a problem with the keyless entry system, consult an Authorized Mazda Dealer.

If your transmitter is lost or stolen, bring all remaining transmitters to an Authorized Mazda Dealer as soon as possible for a replacement and to make the lost or stolen transmitter inoperative.

⚠ CAUTION

Radio equipment like this is governed by laws in the United States. Changes or modifications not expressly approved by the party responsible for compliance could void the user's authority to operate the equipment.

Door Locks

⚠ WARNING

Always take all children and pets with you or leave a responsible person with them:

Leaving a child or a pet unattended in a parked vehicle is dangerous. In hot weather, temperatures inside a vehicle can become high enough to cause brain damage or even death.

Do not leave the keys in your vehicle with children and keep them in a place where your children will not find or play with them:

Leaving children in a vehicle with the key is dangerous. This could result in someone being badly injured or even killed. They could play with power windows or other controls, or even make the vehicle move.

Keep all doors locked when driving:

Unlocked doors in a moving vehicle are dangerous. Passengers can fall out if a door is accidentally opened and can more easily be thrown out in an accident.

Always close all the windows, lock the doors and take the key with you when leaving your vehicle unattended:

▼Locking, Unlocking with Key

The driver's door can be locked/unlocked with the key.
Turn the key toward the front to unlock, toward the back to lock.

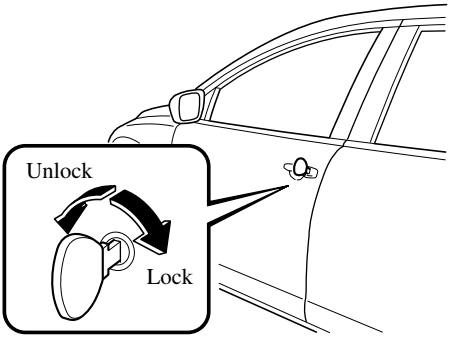

▼Locking, Unlocking with Request Switch (with Advanced Key)

The doors can be locked/unlocked by operating the request switch while carrying the advanced key outside the vehicle, refer to Operations Using Advanced Keyless Functions (page 3-7).

▼Locking, Unlocking with Transmitter (with Advanced Key)

The doors can be locked/unlocked by operating the keyless entry system transmitter, refer to Keyless Entry System (page 3-13).

▼Locking, Unlocking with Transmitter (with Retractable Type Key)

The doors can be locked/unlocked by operating the keyless entry system transmitter, refer to Keyless Entry System (page 3-22).

▼Locking, Unlocking with Door-Lock Knob

To lock any door from the inside, push the door-lock knob.
To unlock, pull it out.
This does not operate the other door locks.

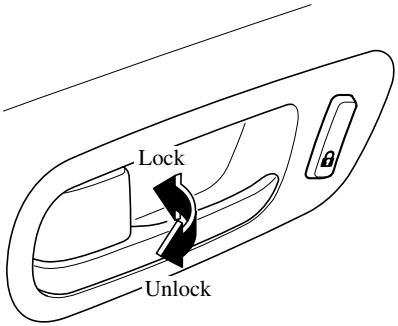

To lock any door with the door-lock knob from the outside, push the door-lock knob to the lock position and close the door.
This does not operate the other door locks.

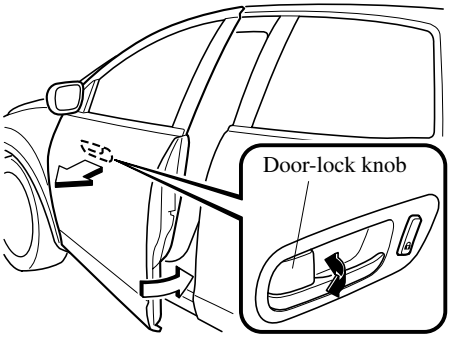

NOTE

- ***(With advanced key)***
  The driver's door cannot be locked using the door-lock knob from the outside.
- *When locking the doors this way, be careful not to leave the key inside the vehicle.*

▼Power Door Locks

Vehicle lock-out prevention

(With advanced key)
The vehicle lock-out prevention feature prevents you from locking yourself out of the vehicle. All doors and the liftgate will automatically unlock if they are locked using the power door locks with any door or the liftgate open.
(With retractable type key)
The vehicle lock-out prevention feature prevents you from locking yourself out of the vehicle. With the key in the ignition switch, all doors and the liftgate will automatically unlock if they are locked using the power door locks with any door or the liftgate open.

Locking, unlocking with key

All doors and the liftgate lock automatically when the driver's door is locked with the key. All doors and the liftgate unlock when the driver's door is unlocked and the key is held in the unlock position for one second or longer.

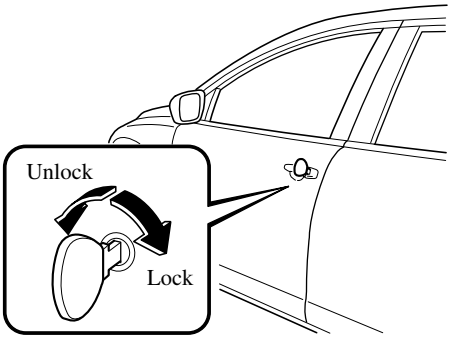

NOTE
Holding the key in the unlocked position in the driver's door lock for about a second unlocks all doors and the liftgate. To unlock only the driver's door, insert the key into the driver's door lock and turn the key briefly to the unlock position and then immediately return it to the center position.

Locking, unlocking with door-lock switch

All doors and the liftgate lock automatically when lock side is pushed. They all unlock when unlock side is pushed.

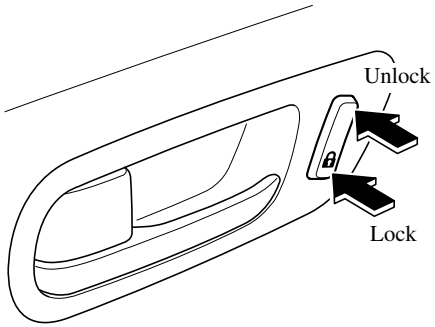

Locking, unlocking with request switch (with advanced key)

All doors and the liftgate can be locked/unlocked by operating the request switch on the front doors and the liftgate while carrying the advanced key outside the vehicle, refer to Operations Using Advanced Keyless Functions (page 3-7).

Locking, unlocking with transmitter (with advanced key)

All doors and the liftgate can be locked/unlocked by operating the keyless entry system transmitter, refer to Keyless Entry System (page 3-13).

Locking, unlocking with transmitter (with retractable type key)

All doors and the liftgate can be locked/unlocked by operating the keyless entry system transmitter, refer to Keyless Entry System (page 3-22).

▼Rear Door Child Safety Locks

These locks are intended to help prevent children from accidentally opening the rear doors. Use them both whenever a child rides in the vehicle.

If you slide the child safety lock to the lock position before closing that door, the door cannot be opened from the inside. The door can be opened only by pulling the outside handle.

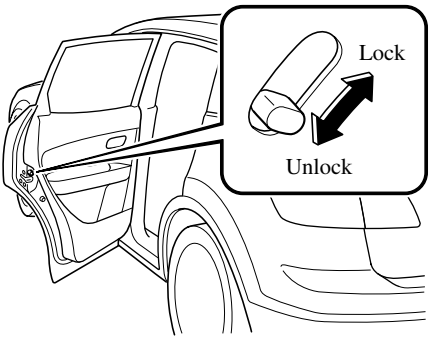

Liftgate

⚠ WARNING

Never allow a person to ride in the luggage compartment:

Allowing a person to ride in the luggage compartment is dangerous. The person in the luggage compartment could be seriously injured or killed during sudden braking or a collision.

Do not drive with the liftgate open:

Exhaust gas in the cabin of a vehicle is dangerous. An open liftgate in a moving vehicle will cause exhaust gas to be drawn into the cabin. This gas contains CO (carbon monoxide), which is colorless, odorless, and highly poisonous, and it can cause loss of consciousness and death. Moreover, an open liftgate could cause occupants to fall out in an accident.

▼Locking, Unlocking with Request Switch (with Advanced Key)

The liftgate can be locked/unlocked by operating the request switch while carrying the advanced key outside the vehicle, refer to Operations Using Advanced Keyless Functions (page 3-7).

▼Locking, Unlocking with Transmitter (with Advanced Key)

The liftgate can be locked/unlocked by operating the keyless entry system transmitter, refer to Keyless Entry System (page 3-13).

▼Locking, Unlocking with Transmitter (with Retractable Type Key)

The liftgate can be locked/unlocked by operating the keyless entry system transmitter, refer to Keyless Entry System (page 3-22).

▼Locking, Unlocking with Door-Lock Switch

The liftgate can be locked/unlocked by operating the door-lock switch, refer to Power Door Locks (page 3-27).

▼Opening and Closing the Liftgate

Manually opening the liftgate

⚠ WARNING

Always fully open the liftgate when opening it:

Raising the liftgate only partially is dangerous as it could drop unexpectedly resulting in injury.

Pull up on the handle.

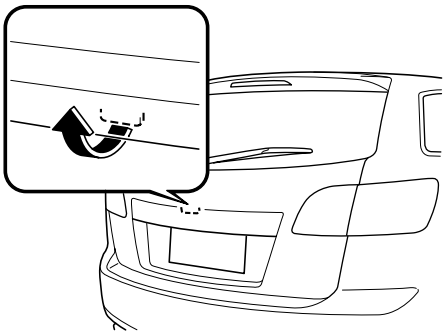

NOTE

If the vehicle battery is dead or there is a malfunction in the electrical system and the liftgate cannot be unlocked, perform the following procedure as an emergency measure to unlock it:

1. *Remove the cap on the interior surface of the liftgate with a flathead screwdriver.*

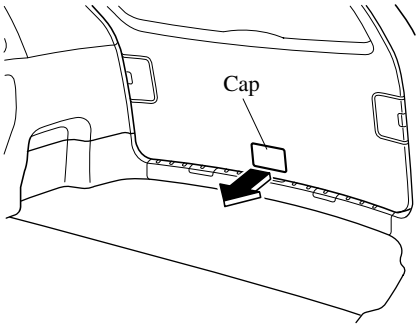

2. ***(With power liftgate)***
   Push the liftgate while pressing the lever down.
   (Without power liftgate)
   Turn the lever to the right to unlock the liftgate

With power liftgate

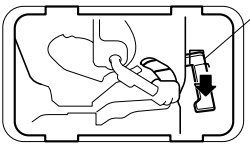

Without power liftgate

After performing this emergency measure, have the vehicle inspected at an Authorized Mazda Dealer as soon as possible.

Manually closing the liftgate

Use both hands to push the liftgate down until the lock snaps shut. Do not slam it. Pull up on the liftgate to make sure it is securely latched.

▼Power Liftgate*

The power liftgate opens/closes electrically by operating switches in the vehicle or the buttons on the keyless entry system transmitter.
Refer to Keyless Entry System on page 3-13.

⚠ WARNING

Be sure to watch the power liftgate as it opens or closes, and make sure that it closes completely:

Opening or closing the power liftgate while not watching it move is dangerous. Because of unseen obstacles and the jam-safe feature, a liftgate may not close completely and, if left unnoticed, could result in serious injury or death if an occupant were to fall out of the vehicle.
Always be sure that the area around the liftgate is clear before activating it.

Always confirm the safety of the area around the power liftgate before operating it electrically.

Not checking the area around the liftgate for people before operating it using the power liftgate switch or the button on the keyless entry system is dangerous. A person could become caught between the liftgate and an obstruction while it is opening electrically or between the liftgate and vehicle while it is closing electrically, resulting in an accident and serious injury.

Always be sure the power liftgate completely closes before shifting into gear and driving the vehicle:

Shifting out of Park (P) while the liftgate is moving is dangerous. The liftgate will not close completely and this could result in serious injury or death if an occupant were to fall out of the vehicle. Occupants in the vehicle will also not have full protection in a collision.

*Some models.

Never allow children to operate the power liftgate system:

Allowing children to operate the power liftgate switch and the keyless entry system is dangerous. Children are not aware of the dangers of people getting fingers and hands caught in a moving liftgate. If someone's neck, head or hands get caught in a closing door, it could result in death or serious injury.

⚠ CAUTION

- *When closing the power liftgate, make sure there are no foreign objects around the striker. If foreign objects are obstructing the striker, the liftgate may not close properly.*

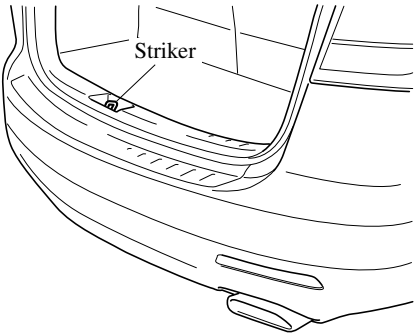

- *Do not install accessories to the power liftgate other than specified accessories. Otherwise, it cannot be opened/closed automatically and could result in a malfunction.*
- *Be careful when switching the power liftgate from electrical to manual operation. The power liftgate may open/close unexpectedly depending on its position which could result in injury.*

NOTE

- *Do not apply unnecessary force to the power liftgate when it is opening/closing electrically. Unnecessary force on the liftgate may cause it to reverse direction of movement automatically.*
- *The power liftgate may not open/close electrically if the vehicle is parked on an incline, or there is strong wind, or the liftgate is laden with snow.*
- *The power liftgate will not operate unless it is unlocked. The power liftgate does not operate unless it is unlocked using the power door lock function.*
  Refer to the Power Door Locks on page 3-26.
- *If a power liftgate system fuse has blown, the liftgate cannot be opened using the power liftgate switch or the outer handle (liftgate).*
  Use the emergency lever to open the liftgate.
- *Fully close the power liftgate before disconnecting the vehicle battery. If the battery is disconnected with the liftgate open, it cannot be opened or closed automatically after the battery is reconnected.*
- *To restore the power liftgate functions, perform the following:*
  1. *Park on level ground.*
  2. *Fully close the liftgate manually.*
  3. *Unlock the liftgate and all the doors.*
  4. *Press the power liftgate switch or the power liftgate button on the keyless entry system transmitter to fully open the liftgate.*
  5. *Press the power liftgate switch or the power liftgate button on the keyless entry system transmitter again to fully close the liftgate.*

Opening/Closing the power liftgate

If the vehicle has satisfied all the following operation conditions, the power liftgate can be opened using the power function.

Operation conditions

(1) The power liftgate is unlocked.
(2) The shift lever is in park (P) when the ignition switch is in the ON position.

NOTE

- *If condition (2) is not satisfied while the power liftgate is opening electrically, the beep sound will be heard and the liftgate will move in the reverse direction automatically.*
- *If condition (2) is not satisfied while the power liftgate is closing electrically, the beep sound will be heard and the liftgate continues closing.*
- *When condition (2) is satisfied, you can resume power liftgate open/close operation with the switches.*
- *When the ignition switch is in the ON position, the transmitter does not operate.*

Operation using the transmitter

Press the open/close button on the transmitter for one second or more with the power liftgate in the fully closed/open position. The hazard warning lights flash twice and the liftgate opens/closes after the beep sounds.
Refer to Keyless Entry System on page 3-13.

Operation from the driver's seat (To open/close)

Press the power liftgate switch for about one second or more while the liftgate is in the fully closed/open position. The hazard warning lights flash twice and the liftgate opens/closes fully after the beep sound is heard.

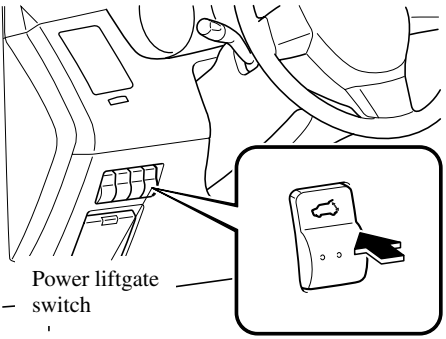

Operation from outside (To close only)

Press the power liftgate close switch for about one second or more while the liftgate is fully opened. The hazard warning lights flash twice and the liftgate closes automatically after the beep sound is heard.

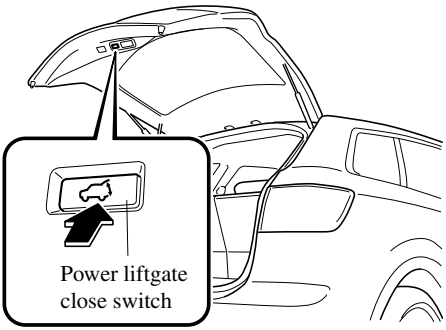

NOTE
If the power liftgate switch/power liftgate close switch/power liftgate button on the transmitter is pressed or the outside handle is operated while the liftgate is opening/closing electrically, the beep sound is heard and the liftgate moves in the reverse direction automatically. If this operation is repeated the system switches to manual operation.

Jam-safe equipment

While the power liftgate is opening/closing electrically and the system detects a person or an object in the liftgate's path, the liftgate will move in the reverse direction automatically.

WARNING

Always check the area around the power liftgate before opening/closing it:

Not checking for occupants and objects around the power liftgate before opening/closing it is dangerous. The jam-safe equipment is designed to prevent jamming in the event an obstruction is in the liftgate's path. The system may not detect certain objects obstructing the liftgate depending on the way they are positioned and their shape. However, if the jam-safe function detects an obstruction and moves the liftgate in the reverse direction, an occupant in the liftgate's path could be seriously injured.

CAUTION

Sensors are installed on both ends of the power liftgate. Be careful not to allow the sensors to be scratched or damaged by sharp objects, otherwise the liftgate may no longer open/close automatically. In addition, if the sensor is damaged while the liftgate is closing automatically, the system changes to manual operation.

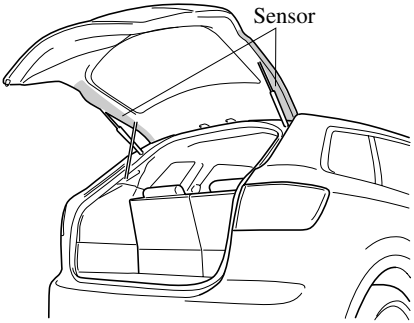

NOTE
- *The liftgate has sensors on both sides. Be careful not to damage them. If the sensors are damaged, the power liftgate will not function properly.*
- *The jam-safe equipment does not activate during easy closure operation when the power liftgate is between the door-ajar position and fully closed position.*

When the power liftgate is moving in the open/close direction and an obstruction is detected, the beep sound will be heard and the liftgate moves in the opposite direction.

NOTE
If the system repeatedly detects an object obstructing the power liftgate in the open/close direction several times, the beep sound will be heard and the system changes to manual operation.

Power liftgate drop prevention mechanism

The power liftgate drop prevention mechanism activates if the system detects weight such as that caused by a snow-laden liftgate when it is opened electrically. After the liftgate is fully opened, the beep sound will be heard and the liftgate closes automatically.

NOTE
- *If the power liftgate is snow-laden, remove the snow before operating the liftgate.*
- *Trying to force the power liftgate closed manually immediately after it has fully opened automatically may activate the liftgate drop prevention mechanism. However, this does not indicate a malfunction.*

Liftgate easy closure

The Easy Closure system automatically closes the liftgate completely from the near-shut position.
This system also operates when the liftgate is closed manually.

⚠ WARNING

When closing a liftgate, always keep hands and fingers away from the liftgate:
Placing hands or fingers around a liftgate is dangerous because the liftgate closes automatically from the near-shut position, which could cause hands and fingers to be pinched and injured.

NOTE
- *If the liftgate handle is pulled while the easy closure function is operating, the liftgate can be opened.*
- *If the liftgate is opened/closed repeatedly in a short period of time, the easy closure function may not operate. Wait for a while and then try again.*

Power Windows

The ignition switch must be in the ON position for the power windows to operate.

⚠ WARNING

Make sure the opening is clear before closing a window:

Closing power windows are dangerous. A person's hands, head, or even neck could be caught by the window and result in serious injury or even death.
This warning applies especially to children.

Always lock all passenger power windows with the power window lock switch on the driver's side while children are in the vehicle, and never allow children to play with power window switches:

Leaving the power window switches unlocked while children are in the vehicle is dangerous. Power window switches that are not locked with the power window lock switch would allow children to operate power windows unintentionally which could result in serious injury if a child's hands, head or neck becomes caught by the window.

▼Operating the Front Power Windows

NOTE

- *Each passenger power window can be operated with each door switch when the power window lock switch on the driver's door is in the unlocked position (page 3-39).*
- *Each passenger power window can also be operated by the power window master control switches on the driver's door.*

Owner master control switch

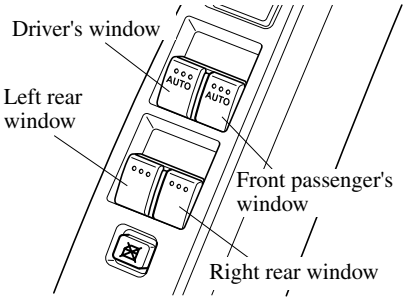

- *The following functions can be performed for the front power windows using the power window master control switches on the driver's door or front passenger's door switch.*
  - *Manual opening/closing*
  - *Auto-opening/closing*
  - *Two-step down function*

Manual opening/closing

To open a power window to the desired position, lightly hold down the switch.
To close the power window to the desired position, lightly pull up the switch.

Owner master control switch

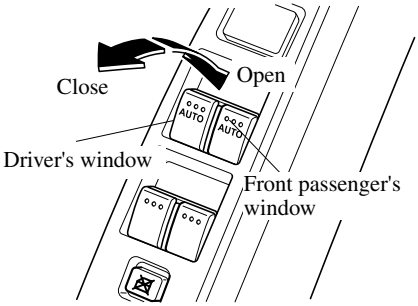

Front passenger switch

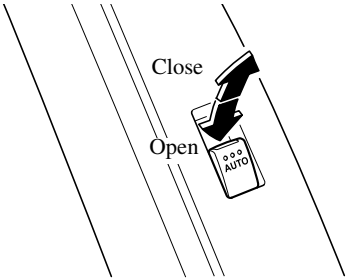

Auto-opening/closing

To fully open a power window automatically, press the switch completely down.
To fully close the power window automatically, pull the switch completely up.

To stop the power window partway, pull or press the switch in the opposite direction and then release it.

NOTE
(POWER WINDOW INITIALIZATION PROCEDURE)
If the battery was disconnected during vehicle maintenance, or for other reasons such as a switch continues to be operated after the window is fully open/close, the power windows will not fully open and close automatically. Re-initialization of the automatic function can be performed using the master control switches and the front passenger door switch. Carry out the following procedure to resume operation:

1. *Turn the ignition switch to the ON position.*
2. *Make sure that the power window lock switch located on the driver's door is not depressed.*
3. *Press the switch and fully open the power window.*
4. *Pull up the switch to fully close the power window and continue holding the switch for about 2 seconds after the window fully closed.*
5. *Repeat Steps 3-4 for each front power window.*
6. *Make sure that the power windows operate correctly using the door switches.*

Two-step down function

With the power window completely closed, press the switch lightly and it will open and stop about 3 cm (1 in) from the top.
If you continue to press and hold the switch, the window will resume opening all the way.

NOTE
Pressing the power window switch once when the window is fully closed will only open it about 3 cm (1 in) to allow convenient ventilation of the cabin.

Canceling the two-step down function

To cancel the two-step down function for the front power windows, carry out the following procedure using the master control switches.

1. Turn the ignition switch to the ON position and complete the following procedure within 5 seconds:
   Press the power window switch 2 times firmly, then pull it 2 times firmly.

Owner master control switch

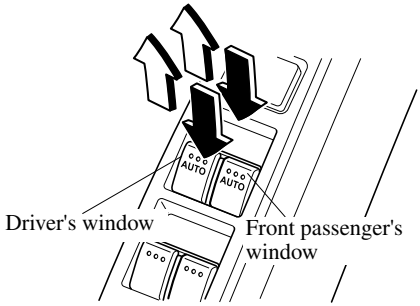

2. Turn the ignition switch to the LOCK position.
3. With the ignition switch in the LOCK position, and within 40 seconds, turn the ignition switch to the ON position and complete the following procedure within 5 seconds:
   Press the power window switch 2 times firmly, then pull 2 times firmly.

NOTE

- *The two-step down function cannot be canceled if the procedure is not completed within the specified times, or the procedure is changed along the way. To redo the procedure, first turn the ignition switch to the LOCK position and proceed from the beginning.*
- *If you are unable to cancel the function despite carrying out the cancellation procedure, consult an Authorized Mazda Dealer.*

Restoring the two-step down function

With the two-step down function in the canceled state, repeat the previous procedure for canceling the function on each door switch and it will be restored.

NOTE

If you are unable to restore the function despite doing the restore procedure, consult an Authorized Mazda Dealer.

Jam-safe window

If a person's hands, head or an object blocks the window during the manual closing operation or the auto-closing operation, the window will stop and open halfway.

⚠ WARNING

Make sure nothing blocks the window just before it reaches the fully closed position or while fully holding up the power window switch:

Blocking the power window just before it reaches the fully closed position or while fully holding up the power window switch is dangerous. In this case, the jam-safe function cannot prevent the window from stopping. If fingers are caught, serious injuries could occur.

NOTE

- *Depending on driving conditions, a closing power window could stop and start opening when the window feels a shock that is similar to something blocking it.*
  In the event the jam-safe function activates and the power window cannot be closed automatically, pull and hold the switch fully and the window will close.
- *The jam-safe window function does not operate until the system is re-initialized.*

Engine-off power window operation

The power window can be operated for about 40 seconds after the ignition switch is turned from the ON position to the ACC or LOCK position with all doors closed. If any door is opened, the power window will be inoperable.

NOTE

- *For engine-off operation of the power window, the switch must be held up firmly throughout window closure because the auto-closing function will be inoperable.*
- *The two-step down function is inoperable during engine-off operation.*

▼Operating the Rear Power Windows

The power windows may be operated when the power window lock switch on the driver's door is in the unlocked position.

The rear power windows may be opened or closed using the power window master control switches on the driver's door.

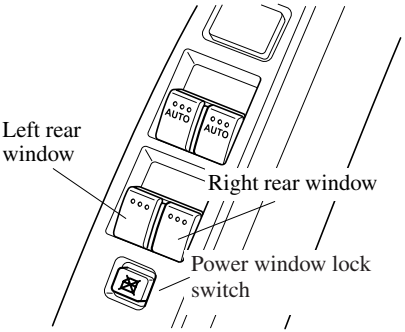

To open the power window to the desired position, hold down the switch.
To close the power window to the desired position, pull up the switch.

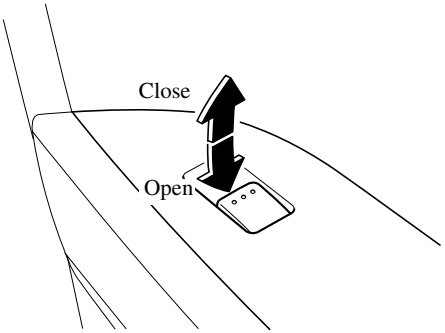

Engine-off power window operation

The power windows can be operated for about 40 seconds after the ignition switch is turned from the ON position to the ACC or LOCK position with all doors closed. If any door is opened, the power windows will be inoperable.

▼Power Window Lock Switch

With the lock switch in the unlocked position, all power windows on each door can be operated.

With the lock switch in the locked position, only the driver's side power window can be operated.

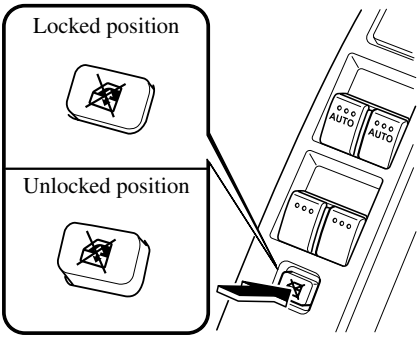

⚠ WARNING

Unless a passenger needs to operate a power window, keep the power window lock switch in the locked position:

Unintentional power window operation is dangerous. A person's hands, head, or neck could be caught by the window and result in serious injury.

NOTE

When the power window lock switch is in the locked position, the light on each power window switch, except for the driver's power window switch, turns off. The light may be difficult to see depending on the surrounding brightness.

▼Opening/Closing the Power Windows from Outside

The front power windows can be opened or closed from outside the vehicle after the doors and the liftgate are closed.
The front power windows may be operated when the power window lock switch on the driver's door is in the lock or unlocked position.

⚠ WARNING

Make sure the opening is clear before closing a window:

Closing power windows are dangerous. A person's hands, head, or even neck could be caught by the window and result in serious injury or even death.
This warning applies especially to children.

NOTE

The power windows cannot be opened or closed from outside the vehicle under the following condition:

- *A door or the liftgate is opened.*
- *The key is inserted into the ignition switch.*
- ***(With advanced key)***
  The start knob is in any position except LOCK.

Opening

Because nobody likes getting into a very hot car, Mazda has introduced a way to open the two front windows and the moonroof as you approach the vehicle to get the air moving before you get in.

WARNING

Use the auto-window function only when you can see the vehicle and it is in a secure area:

Do not let children play with your keys. If they open the window without your knowing, the open windows are an even bigger invitation to a thief than leaving the doors unlocked.

The windows can be opened for ventilating the cabin before getting in the vehicle.

With unlock button (Keyless entry system)

Press once, then press again within 1.5 seconds and hold.
After the doors and the liftgate are unlocked, the two front windows and the moonroof open while the unlock button is pressed.
To stop the windows and the moonroof while opening, release the button.
If the operation is performed from the beginning again, the windows and the moonroof open.

Advanced key

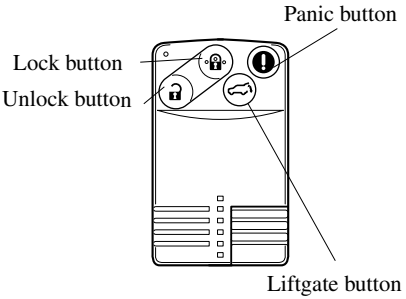

Retractable type key

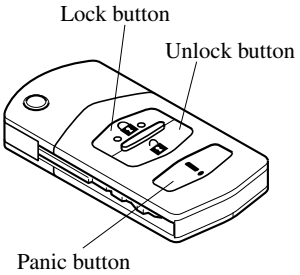

NOTE

- *The unlock button does not operate unless it is pressed twice sequentially.*
- *The lock button cannot be used to close the power windows.*

With key

1. Insert the key in the driver's door key cylinder.

2. Turn the key toward the front and hold it. After the doors and the liftgate are unlocked, the windows fully open automatically.

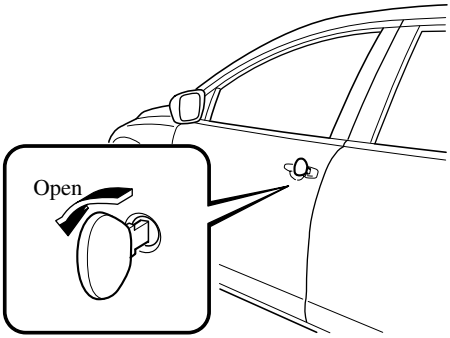

To stop this operation, turn the key to the center position, then turn it toward the front again.

NOTE
The window opening operation also can be stopped by turning the key toward the back. However, the doors and the liftgate will lock.

Closing

The windows can be closed in case they are left open after getting out of the vehicle.

NOTE
(With advanced key)
If the auto-lock function (page 3-8) has been activated, the doors and the liftgate automatically lock as you walk away from the vehicle, however, the power windows cannot be closed. When leaving the vehicle, close the windows using the power window switch inside the vehicle, the key, or a request switch.

With key

1. Insert the key in the driver's door key cylinder.
2. Turn the key toward the back and hold it. After the doors and the liftgate are locked, the windows close as long as the key is turned.

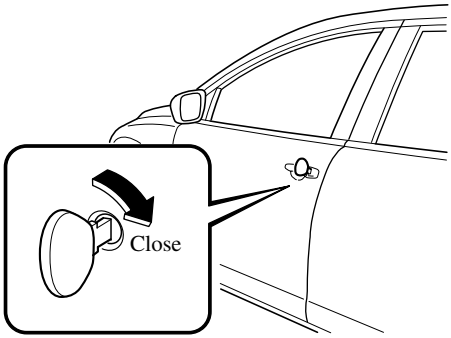

With request switch on the driver's door (Advanced key)

1. If the doors and the liftgate are locked, unlock them.
2. Press and hold the request switch on the driver's door. After the doors and the liftgate are locked, the windows close as long as the request switch is pressed.

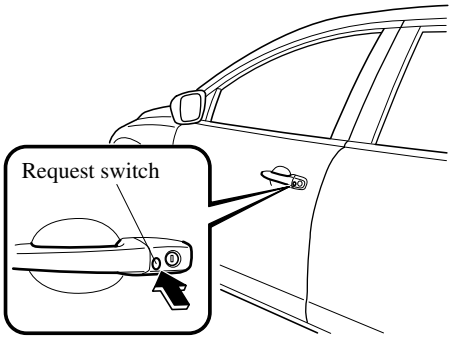

Fuel-Filler Lid and Cap

⚠ WARNING

When removing the fuel cap, loosen the cap slightly and wait for any hissing to stop. Then remove it:

Fuel spray is dangerous. Fuel can burn skin and eyes and cause illness if ingested. Fuel spray is released when there is pressure in the fuel tank and the fuel cap is removed too quickly.

Before refueling, stop the engine, and always keep sparks and flames away from the filler neck:

Fuel vapor is dangerous. It could be ignited by sparks or flames causing serious burns and injuries. Additionally, use of the incorrect fuel filler cap or not using a fuel filler cap may result in fuel leak, which could result in serious burns or death in an accident.

⚠ CAUTION

Always use only a genuine Mazda fuel cap or an approved equivalent, available at an Authorized Mazda Dealer. The wrong cap can result in a serious malfunction of the fuel and emission control systems. It may also cause the check engine light in the instrument cluster to illuminate.

▼Fuel-Filler Lid

To open, pull the remote fuel-filler lid release.

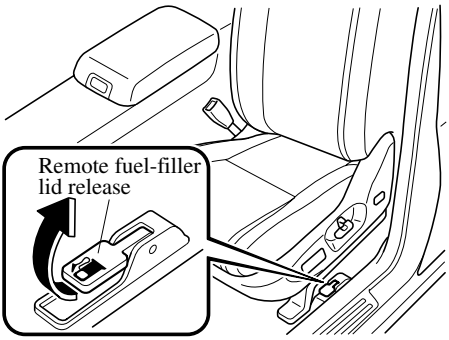

▼Fuel-Filler Cap

To remove the filler cap, turn it counterclockwise.

To close the filler cap, turn it clockwise until two or more clicks are heard.

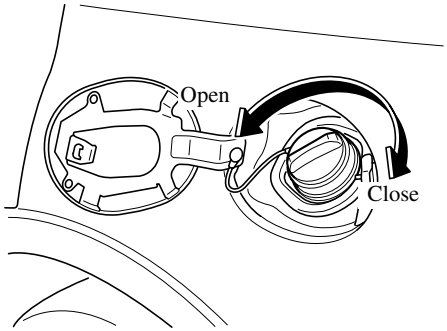

⚠ CAUTION

Make sure the fuel-filler cap is tightened securely. The check fuel cap warning light may illuminate if the cap is not tightened securely. If the light remains on even after you have tightened the cap securely, this may indicate a different problem. Contact an Authorized Mazda Dealer as soon as possible.

Hood

⚠ WARNING

Always check that the hood is closed and securely locked:

A hood that is not closed and securely locked is dangerous as it could fly open while the vehicle is moving and block the driver's vision which could result in a serious accident.

▼Opening the Hood

1. With the vehicle parked, pull the release handle to unlock the hood.

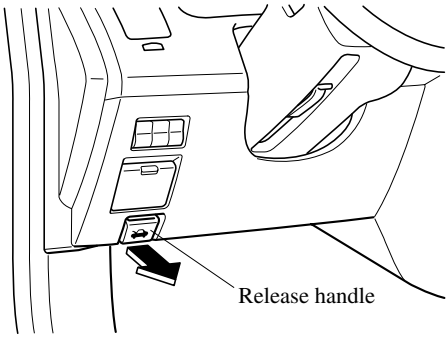

2. Insert your hand into the hood opening and slide the hood latch lever to the right and lift the hood.

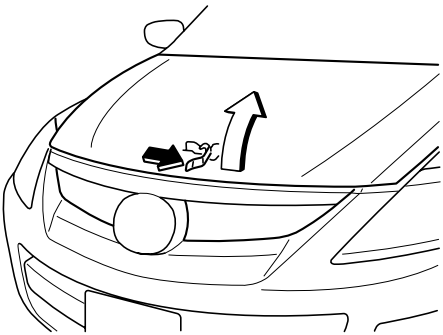

3. Grasp the support rod in the padded area and secure it in the stay hole indicated by the arrow to hold the hood open.

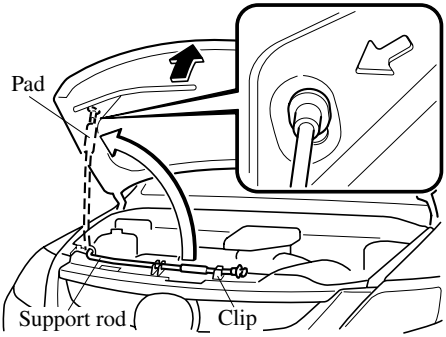

▼Closing the Hood

1. Check under the hood area to make certain all filler caps are in place and all loose items (e.g. tools, oil containers, etc.) have been removed.
2. Insert the support rod in its clip while holding up the hood. Verify that the support rod is secured in the clip before closing the hood.
3. Close the hood so that it locks securely.

Moonroof*

The moonroof can be opened or closed electrically only when the ignition switch is in the ON position.

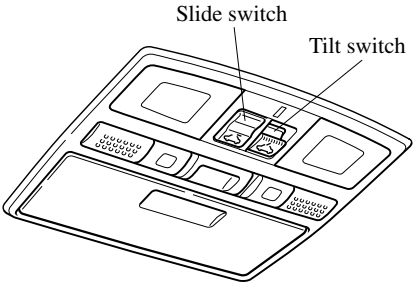

⚠ WARNING

Do not let passengers stand up or extend part of the body through the open moonroof while the vehicle is moving:

Extending the head, arms, or other parts of the body through the moonroof is dangerous. The head or arms could hit something while the vehicle is moving. This could cause serious injury or death.

Make sure the opening is clear before closing the moonroof:

A closing moonroof is dangerous. The hands, head, or even neck of a person —especially a child— could be caught in it as it closes, causing serious injury or even death.

NOTE

After washing your Mazda or after it rains, wipe the water off the moonroof before operating it to avoid water penetration which could cause rust and water damage to your headliner.

*Some models.

▼Operating the Moonroof

Tilt Operation

The rear of the moonroof can be tilted open to provide more ventilation.

To fully tilt automatically, momentarily push the tilt switch.
To fully close automatically, momentarily pull the tilt switch or push the front of the slide switch.

To stop tilting partway, push any part of the tilt or slide switch.

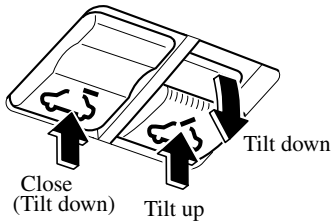

Slide Operation

To fully open automatically, momentarily push the rear of the slide switch.
To fully close automatically, momentarily push the front of the slide switch or pull the tilt switch.

To stop sliding partway, push any part of the tilt or slide switch.

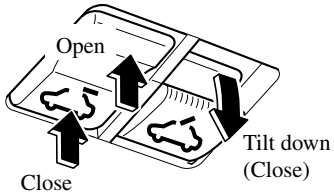

Power moonroof initialization procedure

If the battery had been disconnected during vehicle maintenance or for other reasons, the moonroof may not fully open or close. The moonroof's jam-safe function does not function while the moonroof is initializing. Carry out the following procedure to resume operation:

1. Turn the ignition switch to the ON position.
2. Pull the tilt switch, to partially tilt open the rear of the moonroof.

NOTE
If the re-initialization procedure is performed while the moonroof is in the slide position (partially open) it closes before the rear tilts opens.

3. Repeat the procedure in Step 2. The rear of the moonroof tilts open to the fully open position, then closes a little.

▼Engine-off Moonroof Operation

The moonroof can be operated for about 40 seconds after the ignition switch is turned from the ON position to the ACC or LOCK position with all doors closed. If any door is opened, the moonroof will be inoperable.

▼Opening/Closing the Moonroof from Outside

The moonroof can be opened or closed from outside the vehicle after the doors and the liftgate are closed.

⚠ WARNING

Make sure the opening is clear before closing the moonroof:

Closing the moonroof is dangerous. A person's hands, head, or even neck could be caught by the moonroof and result in serious injury or even death. This warning applies especially to children and pets.

NOTE

The moonroof cannot be opened or closed from outside the vehicle under the following condition:

- *A door or the liftgate is opened.*
- *The key is inserted into the ignition switch.*
- ***(With advanced key)***
  The start knob is pushed into the ignition switch.

Opening

Because nobody likes getting into a very hot car, Mazda has introduced a way to open the two front windows and the moonroof as you approach the vehicle to get the air moving before you get in.

⚠ WARNING

Use the auto-moonroof function only when you can see the vehicle and it is in a secure area:

Do not let children play with your keys. If they open the moonroof without your knowing, the open moonroof is an even bigger invitation to a thief than leaving the doors unlocked.

The moonroof can be opened for ventilating the cabin before getting in the vehicle.

With unlock button (Keyless entry system)

Press once, then press again within 1.5 seconds and hold.
After the doors and the liftgate are unlocked, the two front windows and the moonroof open as long as the unlock button is pressed.

Advanced key

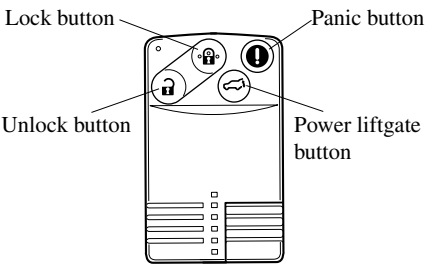

Retractable type key

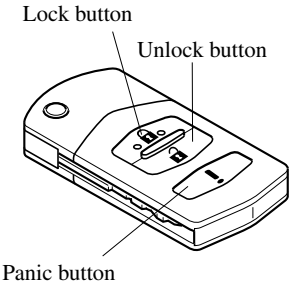

To stop the windows and the moonroof from opening, release the button.
If the operation is performed from the beginning again, the windows and the moonroof open.

NOTE

- *The unlock button does not operate unless it is pressed twice sequentially.*
- *The lock button cannot be used to close the moonroof.*

With key

1. Insert the key in the driver's door key cylinder.
2. Turn the key toward the front and hold it. After the doors and the liftgate are unlocked, the moonroof fully opens automatically.

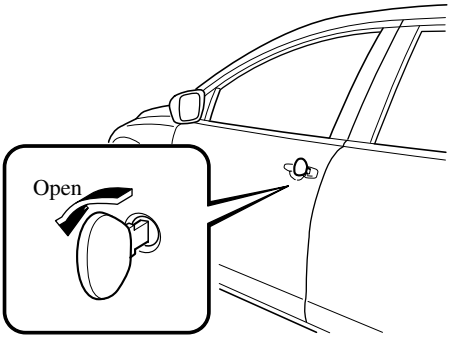

To stop this operation, turn the key to the center position, then turn it toward the front again.

NOTE

The moonroof opening operation also can be stopped by turning the key toward the back. However, the doors and the liftgate will lock.

Closing

The moonroof can be closed in case it is left open after getting out of the vehicle.

NOTE

(With advanced key)

If the auto-lock function (page 3-8) has been activated, the doors and the liftgate automatically lock as you walk away from the vehicle, however, for safety reasons, the moonroof cannot be closed. When leaving the vehicle, close the moonroof using the tilt or slide switch inside the vehicle, the key, or a request switch.

With key

1. Insert the key in the driver's door key cylinder.

2. Turn the key toward the back and hold it. After the doors and the liftgate are locked, the moonroof closes as long as the key is turned.

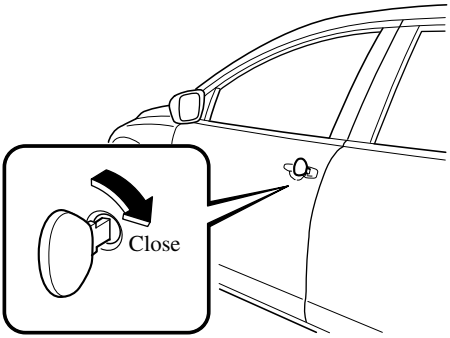

With request switch on the driver's door (Advanced key)

1. If the doors and the liftgate are locked, unlock them.
2. Press the request switch on the driver's door and hold it. After the doors and the liftgate are locked, the moonroof closes as long as the request switch is pressed.

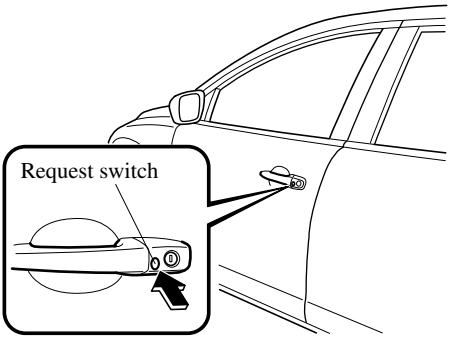

▼Jam-safe Moonroof

If a person's hands, head or an object blocks the moonroof during closing operation, the moonroof will stop and open halfway.

⚠ WARNING

Make sure nothing blocks the moonroof just before it reaches the fully closed position:

Blocking the moonroof just before it reaches the closed position is dangerous.
In this case, the jam-safe function cannot prevent the moonroof from stopping. If fingers are caught, serious injuries could occur.

NOTE

- *Depending on driving conditions, a closing moonroof could stop and start opening when the moonroof feels a shock that is similar to something blocking it.*
- *The moonroof's jam-safe function does not function while the moonroof is initializing.*

▼Sunshade

The sunshade can be opened and closed by hand.

The sunshade opens automatically when the moonroof is opened, but must be closed by hand.

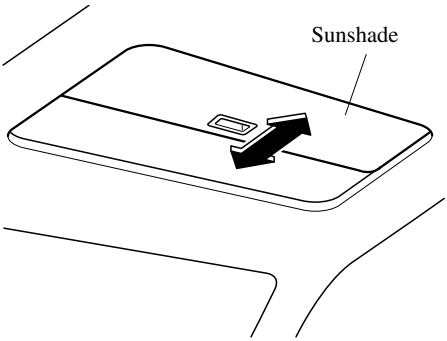

⚠ CAUTION

- *The sunshade does not tilt. To avoid damaging the sunshade, do not push up on it.*
- *Do not close the sunshade while the moonroof is opening. Trying to force the sunshade closed could damage it.*

Immobilizer System (with Advanced Key)

The immobilizer system allows the engine to start only with an advanced key the system recognizes.

If someone attempts to start the engine with an unrecognized key, the engine will not start, thereby helping to prevent the theft of your vehicle.

⚠ CAUTION

- *Radio equipment like this is governed by laws in the United States.*
  Changes or modifications not expressly approved by the party responsible for compliance could void the user's authority to operate the equipment.
- *To avoid damage to the key, do not:*
  - *Drop the key.*
  - *Get the key wet.*
  - *Expose the key to any kind of magnetic field.*
  - *Expose the key to high temperatures on places such as the dashboard or hood, under direct sunlight.*

⚠ CAUTION

Do not allow the following when starting the engine with the auxiliary key due to an advanced key dead battery or other malfunction. Otherwise the signal from the auxiliary key will not be received correctly and the engine may not start.

- *Metal parts of other keys or metal objects touch the key grip.*
- *Spare auxiliary keys or keys for other vehicles equipped with an immobilizer system touch or come near the auxiliary key.*
- *Equipment containing electronic components or cards with magnetic strips such as credit cards come near the auxiliary key.*

NOTE

- ***(U.S.A.)***
  This device complies with Part 15 of the FCC Rules. Operation is subject to the following two conditions: (1) this device may not cause harmful interference, and (2) this device must accept any interference received, including interference that may cause undesired operation.
- ***(CANADA)***
  This device complies with RSS-210 of Industry CANADA. Operation is subject to the following two conditions: (1) this device may not cause interference, and (2) this device must accept any interference, including interference that may cause undesired operation of the device.

▼Operation

Arming

The system is armed when the ignition switch is turned from the ON position to the ACC or LOCK position. The security indicator light in the instrument cluster flashes every 2 seconds until the system is disarmed.

Disarming

The system is disarmed when the ignition switch is turned to the ON position with the registered advanced key.
The security indicator light illuminates for about 3 seconds and goes out.

If the engine doesn't start with the correct ignition key, and the security indicator light keeps illuminating or flashing, the system may have a malfunction. Consult an Authorized Mazda Dealer.

NOTE

- *The engine may not start and the security indicator light may illuminate or flash if the advanced key is placed in an area where it is difficult for the system to detect the signal, such as on the dashboard, or in the glove box. Move the advanced key to another place, turn the ignition switch to the LOCK position, and then restart the engine.*
- *Signals from a TV or radio station, or from a transceiver or a mobile telephone could interfere with your immobilizer system. If you are using the proper advanced key and the engine fails to start, check the security indicator light. If the indicator light is flashing, turn the ignition switch to the ACC or LOCK position and wait for a while, then restart the engine. If it doesn't start after 3 or more tries, contact an Authorized Mazda Dealer.*
- *If the security indicator light flashes continuously while you are driving, don't shut off the engine. Go to an Authorized Mazda Dealer and have it checked. If the engine is shut off while the indicator light is flashing, you won't be able to restart it.*
- *Since the electronic codes are reset when repairing the immobilizer system, the advanced key (including auxiliary key) are needed. Bring all the advanced keys (including auxiliary keys) to an Authorized Mazda Dealer.*

▼Maintenance

If you have a problem with the immobilizer system or the key, consult an Authorized Mazda Dealer.

NOTE

- *The advanced keys (including auxiliary key) carry a unique electronic code. For this reason, and to assure your safety, obtaining a replacement advanced key (including auxiliary key) requires some waiting time. They are only available through an Authorized Mazda Dealer.*
- *Always keep a spare advanced key in case one is lost. If an advanced key is lost, consult an Authorized Mazda Dealer as soon as possible.*
- *If you lose an advanced key (including auxiliary key), an Authorized Mazda Dealer will reset the electronic codes of your remaining advanced keys (including auxiliary keys) and immobilizer system. Bring all the remaining advanced keys (including auxiliary keys) to an Authorized Mazda Dealer to reset.*
  Starting the vehicle with a key that has not been reset is not possible.

▼Modification and Add-On Equipment

Mazda cannot guarantee the immobilizer system's operation if the system has been modified or if any add-on equipment has been installed to it.

⚠ CAUTION

To avoid damage to your vehicle, do not modify the system or install any add-on equipment to the immobilizer system or the vehicle.

Immobilizer System (without Advanced Key)

The immobilizer system allows the engine to start only with a key the system recognizes.

If someone attempts to start the engine with an unrecognized key, the engine will not start, thereby helping to prevent the theft of your vehicle.

⚠ CAUTION

- *Radio equipment like this is governed by laws in the United States.*
  Changes or modifications not expressly approved by the party responsible for compliance could void the user's authority to operate the equipment.
- *To avoid damage to the key, do not:*
  - *Drop the key.*
  - *Get the key wet.*
  - *Expose the key to any kind of magnetic field.*
  - *Expose the key to high temperatures on places such as the dashboard or hood, under direct sunlight.*

⚠ CAUTION

When starting the engine do not allow the following, as the engine may not start due to the electronic signal from the ignition key not being transmitted correctly.

- *A key ring rests on the key grip.*

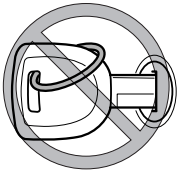

- *Metal parts of other keys or metal objects touch the key grip.*

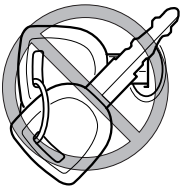

- *Spare keys or keys for other vehicles equipped with an immobilizer system touch or come near the key grip.*

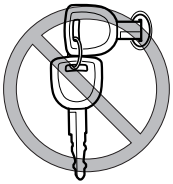

- *Devices for electronic purchases, or security passage touch or come near the key.*

NOTE

- ***(U.S.A.)***
  This device complies with Part 15 of the FCC Rules. Operation is subject to the following two conditions: (1) this device may not cause harmful interference, and (2) this device must accept any interference received, including interference that may cause undesired operation.
- ***(CANADA)***
  This device complies with RSS-210 of Industry CANADA. Operation is subject to the following two conditions: (1) this device may not cause interference, and (2) this device must accept any interference, including interference that may cause undesired operation of the device.

▼Operation

Arming

The system is armed when the ignition switch is turned from the ON to the ACC position.
The security indicator light in the instrument panel flashes every 2 seconds until the system is disarmed.

Disarming

The system is disarmed when the ignition switch is turned to the ON position with the correct ignition key.
The security indicator light illuminates for about 3 seconds and goes out.

If the engine doesn't start with the correct ignition key, and the security indicator light keeps illuminating or flashing, the system may have a malfunction. Consult an Authorized Mazda Dealer.

NOTE

- *If the security indicator light comes on and stays on when the ignition switch is turned to the ON position, the engine will not start.*
- *Signals from a TV or radio station, or from a transceiver or a mobile telephone, could interfere with your immobilizer system. If you are using the proper key and your engine fails to start, check the security indicator light. If it is flashing, remove the ignition key and wait 2 seconds or more, then reinsert it and try starting the engine again. If it doesn't start after 3 or more tries, contact an Authorized Mazda Dealer.*
- *If the security indicator light flashes continuously while you are driving, don't shut off the engine. Go to an Authorized Mazda Dealer and have it checked. If you shut off the engine while the light is flashing you won't be able to restart it.*
- *Since the electronic codes are reset when repairing the immobilizer system, the keys are needed. Bring all the existing keys to an Authorized Mazda Dealer.*

▼Maintenance

If you have a problem with the immobilizer system or the key, consult an Authorized Mazda Dealer.

NOTE

- *The keys carry a unique electronic code. For this reason, and to assure your safety, obtaining replacement key requires some waiting time. They are only available through an Authorized Mazda Dealer.*
- *Always keep a spare key, in case one is lost. If a key is lost, contact an Authorized Mazda Dealer as soon as possible.*
- *If you lose a key, an Authorized Mazda Dealer will reset the electronic codes of your remaining keys and immobilizer system. Bring all the remaining keys to an Authorized Mazda Dealer to reset. Starting the vehicle with a key that has not been reset is not possible.*

▼Modification and Add-On Equipment

Mazda cannot guarantee the immobilizer system's operation if the system has been modified or if any add-on equipment has been installed to it.

⚠ CAUTION

To avoid damage to your vehicle, do not modify the system or install any add-on equipment to the immobilizer system or the vehicle.

Theft-Deterrent System*

If the theft deterrent system detects an inappropriate entry into the vehicle, which could result in the vehicle or its contents being stolen, the alarm alerts the surrounding area of an abnormality by sounding the horn and flashing the hazard warning lights.
Refer to Operation on page 3-55.

NOTE

- *The theft-deterrent system operates with the advanced keyless function, keyless entry system or the auxiliary key.*
  The system operates only when the driver is in the vehicle or within operational range while the advanced key is being carried.
- *The system will not function unless it is properly armed. To properly secure the vehicle, always make sure all windows are completely closed and all doors and the liftgate are locked before leaving the vehicle. Remember to take your advanced key.*

▼Operation

What turns it on:

- Forcing open a door, the hood or the liftgate.
- Opening a door or the hood by operating an inside door-lock knob or the hood release handle.

What it does:

- The horn sounds intermittently and the hazard warning lights flash.
- The alarm continues for about 30 seconds, then stops.

If the system is triggered again, the lights and horn will activate until a door or the liftgate is unlocked with the key or with the transmitter.

▼How to Arm the System

1. Remove the key from the ignition switch.
   (With advanced key)
   Turn the start knob to the LOCK position.
2. Make sure the hood is closed. Close and lock all doors and the liftgate from the outside using the key. If you have the keyless entry system, press the lock button on the transmitter.
   (With advanced key)
   Press a request switch or the lock button on the transmitter.

   The hazard warning lights will flash once to indicate that the system is armed.

   (Without advanced key)
   The following method will also arm the theft-deterrent system:
   Close the hood and the liftgate . Press the area on the door-lock switch marked “🔒 ” once. Close all doors.

▼To Turn off an Armed System

An armed system can be turned off by any one of the following methods:

- Unlock a door with the key.
- Press the unlock button on the keyless entry system transmitter.
- Insert the key into the ignition switch and turn it to the ON position.
- **(With advanced key)**
  - Press a request switch or the unlock button on the transmitter.
  - Turn the start knob to the ON position.

The hazard warning lights will flash twice to indicate that the system is turned off.

*Some models.

▼To Stop an Alarm

A triggered alarm can be turned off by any one of the following methods:

- Unlock a door or the liftgate with the key.
- Press the unlock button on the keyless entry system transmitter.
- **(With advanced key)**
  - Press a request switch.
  - Press the unlock button on the transmitter.

NOTE
If you have any problem with the theft-deterrent system, consult an Authorized Mazda Dealer.

▼Theft-Deterrent Labels

A label indicating that your vehicle is equipped with a Theft-Deterrent System is in the glove box.

Mazda recommends that you affix it to the lower rear corner of a front door window.

Steering Wheel

WARNING

Never adjust the steering wheel while the vehicle is moving:

Adjusting the steering wheel while the vehicle is moving is dangerous. Moving it can very easily cause the driver to abruptly turn to the left or right. This can lead to loss of control or an accident.

▼Steering Wheel Adjustment

To change the angle or length of the steering wheel:

1. Stop the vehicle, pull down the lock release lever under the steering column.

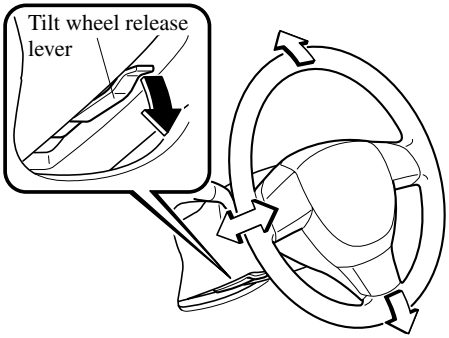

2. Tilt the steering wheel and/or adjust the steering column length to the desired positions, push the lever up to lock the column.
3. Push the wheel up and down to be certain it's locked before driving.

Mirrors

▼Outside Mirrors

Check the mirror angles before driving.

Mirror type

Flat type (driver's side)
Flat surface mirror.
Convex type (front passenger side)
The mirror has single curvature on its surface.

WARNING

Be sure to look over your shoulder before changing lanes:

Changing lanes without taking into account the actual distance of the vehicle in the convex mirror is dangerous. You could have a serious accident. What you see in the convex mirror is closer than it appears.

Power mirror

The ignition switch must be in the ACC or ON position.

To adjust:

1. Press the left or right side of the selector switch to choose the left or right side mirror.

2. Depress the mirror switch in the appropriate direction.

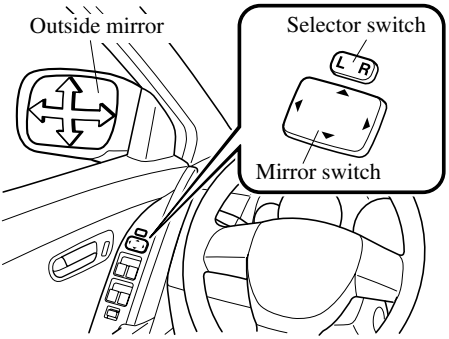

After adjusting the mirror, lock the control by placing the selector switch in the middle position.

Folding the mirror

Fold the outside mirror rearward until it is flush with the vehicle.

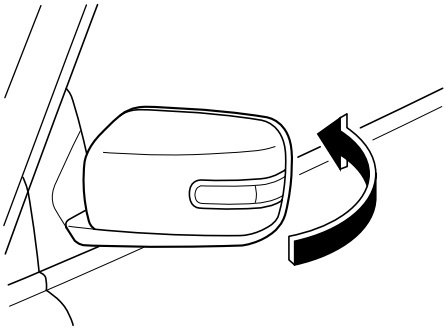

⚠ WARNING

Always return the outside mirrors to the driving position before you start driving:

Driving with the outside mirrors folded in is dangerous. Your rear view will be restricted, and you could have an accident.

Mirror defroster ✶

To turn on the mirror defrosters, turn the ignition switch to the ON position and push the rear window defroster switch (page 5-66).

▼Rearview Mirror

Rearview mirror adjustment

Before driving, adjust the rearview mirror to center on the scene through the rear window.

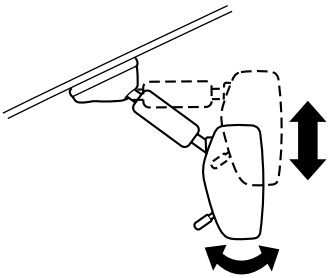

Reducing glare from headlights

Adjust the mirror with the day/night lever in the day position.

Push the lever forward for day driving. Pull it back to reduce glare from headlights.

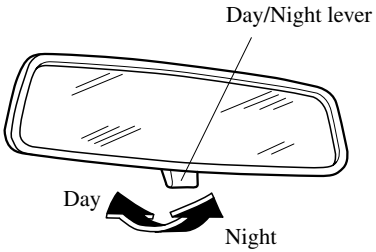

✶Some models.

WARNING

Do not stack cargo or objects higher than the seatbacks:

Cargo stacked higher than the seatbacks is dangerous. It can block your view in the rearview mirror, which might cause you to hit another car when changing lanes.

4 Before Driving Your Mazda

Important information about driving your Mazda.

Fuel and Engine Exhaust Precautions 4-2
Fuel Requirements 4-2
Emission Control System 4-3
Engine Exhaust (Carbon Monoxide) 4-4

Before Starting the Engine 4-5
Before Getting In 4-5
After Getting In 4-5

Driving Tips 4-6
Break-In Period 4-6
Money-Saving Suggestions 4-6
Hazardous Driving 4-7
Rocking the Vehicle 4-9
Winter Driving 4-9
Driving In Flooded Area 4-11
Overloading 4-11

Towing 4-12
Trailer Towing (Except Mexico) 4-12

Fuel Requirements

Vehicles with catalytic converters or oxygen sensors must use ONLY UNLEADED FUEL, which will reduce exhaust emissions and keep spark plug fouling to a minimum.

Fuel with a lower rating could cause the emission control system to lose effectiveness. It could also cause engine knocking and serious engine damage.

Your Mazda will perform best with fuel listed in the table.

Fuel	Octane Rating*(Anti-knock index)
Regular unleaded fuel	87 [(R+M)/2 method] or above (91 RON or above)

* U.S. federal law requires that octane ratings be posted on gasoline station pumps.

Fuel with a rating lower than 87 octane (91 RON) could cause the emission control system to lose effectiveness. It could also cause engine knocking and serious engine damage.

CAUTION

- *USE ONLY UNLEADED FUEL.*
  Leaded fuel is harmful to the catalytic converter and oxygen sensors and will lead to deterioration of the emission control system and or failures.
- *Your vehicle can only use oxygenated fuels containing no more than 10% ethanol by volume. Damage to your vehicle may occur when ethanol exceeds this recommendation, or if the gasoline contains any methanol. Stop using gasohol of any kind if your vehicle engine is performing poorly.*
- *Never add fuel system additives. Never add cleaning agents other than those specified by Mazda. Other cleaning agents and additives may damage the system. Consult an Authorized Mazda Dealer.*

Gasoline blended with oxygenates such as alcohol or ether compounds are generally referred to as oxygenated fuels. The common gasoline blend that can be used with your vehicle is ethanol blended at no more than 10%. Gasoline containing alcohol, such as ethanol or methanol, may be marketed under the name “Gasohol”.

Vehicle damage and drivability problems resulting from the use of the following may not be covered by the Mazda warranty.
- Gasohol containing more than 10% ethanol.
- Gasoline or gasohol containing methanol.
- Leaded fuel or leaded gasohol.

Emission Control System

Your vehicle is equipped with an emission control system (the catalytic converter is part of this system) that enables your vehicle to comply with existing exhaust emissions requirements.

WARNING

Never park over or near anything flammable:

Parking over or near anything flammable, such as dry grass, is dangerous. Even with the engine turned off, the exhaust system remains very hot after normal use and could ignite anything flammable. A resulting fire could cause serious injury or death.

CAUTION

Ignoring the following precautions could cause lead to accumulate on the catalyst inside the converter or cause the converter to get very hot. Either condition will damage the converter and cause poor performance.

- *USE ONLY UNLEADED FUEL.*
- *Don't drive your Mazda with any sign of engine malfunction.*
- *Don't coast with the ignition switch turned off.*
- *Don't descend steep grades in gear with the ignition switch turned off.*
- *Don't operate the engine at high idle for more than 5 minutes.*
- *Don't tamper with the emission control system. All inspections and adjustments must be made by a qualified technician.*
- *Don't push-start or pull-start your vehicle.*

NOTE

Under U.S. federal law, any modification to the original-equipment emission control system before the first sale and registration of a vehicle is subject to penalties. In some states, such modification made on a used vehicle is also subject to penalties.

Engine Exhaust (Carbon Monoxide)

WARNING

Do not drive your vehicle if you smell exhaust gas inside the vehicle:

Engine exhaust gas is dangerous. This gas contains carbon monoxide (CO), which is colorless, odorless, and poisonous. When inhaled, it can cause loss of consciousness and death. If you smell exhaust gas inside your vehicle, keep all windows fully open and contact an Authorized Mazda Dealer immediately.

Do not run the engine when inside an enclosed area:

Running the engine inside an enclosed area, such as a garage, is dangerous. Exhaust gas, which contains poisonous carbon monoxide, could easily enter the cabin. Loss of consciousness or even death could occur.

Open the windows or adjust the heating or cooling system to draw fresh air when idling the engine:

Exhaust gas is dangerous. When your vehicle is stopped with the windows closed and the engine running for a long time even in an open area, exhaust gas, which contains poisonous carbon monoxide, could enter the cabin. Loss of consciousness or even death could occur.

Clear snow from underneath and around your vehicle, particularly the tail pipe, before starting the engine:

Running the engine when a vehicle is stopped in deep snow is dangerous. The exhaust pipe could be blocked by the snow, allowing exhaust gas to enter the cabin. Because exhaust gas contains poisonous carbon monoxide, it could cause loss of consciousness or even death to occupants in the cabin.

Before Getting In

- Be sure the windows, outside mirrors, and outside lights are clean.
- Inspect inflation pressures and condition of tires.
- Look under the vehicle for any sign of fluid leaks.
- If you plan to back up, make sure nothing is in your way.

NOTE

Engine oil, engine coolant, brake fluid, washer fluid, and other fluid levels should be inspected. See Maintenance, Section 8.

After Getting In

- Are all doors closed and locked?
- Is the seat adjusted properly?
- Are the inside and outside mirrors adjusted?
- Is everyone's seat belt fastened?
- Check all gauges.
- Check all warning lights when the ignition switch is turned to the ON position.
- Release the parking brake and make sure the brake warning light goes off.

Always be thoroughly familiar with your Mazda.

Break-In Period

No special break-in is necessary, but a few precautions in the first 1,000 km (600 miles) may add to the performance, economy, and life of your Mazda.

- Don't race the engine.
- Don't maintain one constant speed, either slow or fast, for a long period of time.
- Don't drive constantly at full-throttle or high engine rpm for extended periods of time.
- Avoid unnecessary hard stops.
- Avoid full-throttle starts.
- Don't tow a trailer.

Money-Saving Suggestions

How you operate your Mazda determines how far it will travel on a tank of fuel. Use these suggestions to help save money on fuel and repairs.

- Avoid long warm-ups. Once the engine runs smoothly, begin driving.
- Avoid fast starts.
- Keep the engine tuned. Follow the maintenance schedule (page 8-3) and have an Authorized Mazda Dealer perform inspections and servicing.
- Use the air conditioner only when necessary.
- Slow down on rough roads.
- Keep the tires properly inflated.
- Don't carry unnecessary weight.
- Don't rest your foot on the brake pedal while driving.
- Keep the wheels in correct alignment.
- Keep windows closed at high speeds.
- Slow down when driving in crosswinds and headwinds.

⚠ WARNING

Never stop the engine when going down a hill:

Stopping the engine when going down a hill is dangerous. This causes the loss of power steering and power brake control, and may cause damage to the drivetrain. Any loss of steering or braking control could cause an accident.

Hazardous Driving

▼Driving on Slippery Surface

⚠ WARNING

Be extremely careful if it is necessary to downshift on slippery surfaces:

Downshifting into lower gear while driving on slippery surfaces is dangerous. The sudden change in tire speed could cause the tires to skid. This could lead to loss of vehicle control and an accident.

Do not rely on ABS or RSC as a substitute for safe driving:

The ABS and RSC cannot compensate for unsafe and reckless driving, excessive speed, tailgating (following another vehicle too closely), driving on ice and snow, and hydroplaning (reduced tire friction and road contact because of water on the road surface). You can still have an accident.

When driving on ice or in water, snow, mud, sand, or similar hazards:

- Be cautious and allow extra distance for braking.
- Avoid sudden braking and sudden maneuvering.
- Do not pump the brakes. Continue to press down on the brake pedal.
- If you get stuck, select a lower gear and accelerate slowly. Do not spin the front wheels.
- Do not perform abrupt maneuvers when the road surface changes (such as from a paved road to gravel) because the reaction of the vehicle against the driving operation changes.
- For more traction in starting on slippery surfaces such as ice or packed snow, use sand, rock salt, chains, carpeting, or other nonslip material under the front wheels.

NOTE

Use snow chains only on the front wheels.

▼Roll-over

WARNING

Avoid sharp turns, excessive speed and abrupt maneuvers when driving this vehicle:

Sharp turns, excessive speed and abrupt maneuvering of this vehicle is dangerous as it could result in the increased risk of loss of vehicle control, vehicle roll-over, personal injury or death.
This vehicle has a higher center of gravity. Vehicles with a higher center of gravity such as utility and AWD vehicles handle differently than vehicles with a lower center of gravity.
Utility and AWD vehicles are not designed for cornering at speeds as any more than low profile sports cars are designed to perform satisfactorily under off-road conditions. In addition, utility vehicles have a significantly higher rollover rate than other types of vehicles.
RSC might help if you get into trouble, but then it might not be able to allow you to fully recover, always drive carefully with the vehicle's height in mind.

Drive carefully when the vehicle is loaded by lowering vehicle speed and applying the brakes earlier:

Abrupt maneuvering and sudden braking when driving a loaded vehicle is dangerous as the driving behavior of a vehicle with a high center of gravity is different when it is loaded compared to when it is not, and could result in the loss of vehicle control and an accident.

▼Emergency Maneuvering

WARNING

Do not perform abrupt maneuvers when driving the vehicle in an emergency situation:

Performing abrupt maneuvers even when driving in an emergency situation is dangerous as it could reduce vehicle stability and operability resulting in an accident. Operate the accelerator pedal, brake pedal, and the steering wheel smoothly.

Rocking the Vehicle

⚠ WARNING

Do not spin the wheels at more than 56 km/h (35 mph), and do not allow anyone to stand behind a wheel when pushing the vehicle:

When the vehicle is stuck, spinning the wheels at high speed is dangerous. The spinning tire could overheat and explode. This could cause serious injuries.

⚠ CAUTION

Too much rocking may cause engine overheating, transaxle failure, and tire damage.

If you must rock the vehicle to free it from snow, sand or mud, depress the accelerator slightly and slowly move the shift lever from D to R.

Winter Driving

- Carry emergency gear, including tire chains, window scraper, flares, a small shovel, jumper cables, and a small bag of sand or salt.

Ask an Authorized Mazda Dealer to perform the following precautions:

- Have the proper ratio of antifreeze in the radiator.
  Refer to Engine Coolant on page 8-21.
- Inspect the battery and its cables. Cold reduces battery capacity.
- Inspect the ignition system for damage and loose connections.
- Use washer fluid made with antifreeze—but don't use engine coolant antifreeze for washer fluid (page 8-26).
- Don't use the parking brake in freezing weather as the parking brake may freeze. Instead, shift to P and block the rear wheels.

▼Snow Tires

Use snow tires on all four wheels

Don't go faster than 120 km/h (75 mph) while driving with snow tires. Inflate snow tires 30 kPa (0.3 kgf/cm^2, 4.3 psi) more than recommended on the tire pressure label (driver's door frame), but never more than the maximum cold-tire pressure shown on the tires.

⚠ WARNING

Use only the same size and type tires (snow, radial, or non-radial) on all four wheels:

Using tires different in size or type is dangerous. Your vehicle's handling could be greatly affected and result in an accident.

⚠ CAUTION

Check local regulations before using studded tires.

NOTE
If your vehicle is equipped with the tire pressure monitoring system, the system may not function correctly when using tires with steel wire reinforcement in the sidewalls (page 5-31).

▼Tire Chains

Check local regulations before using tire chains.

⚠ CAUTION

- *Chains may affect handling.*
- *Do not go faster than 50 km/h (30 mph) or the chain manufacturer's recommended limit, whichever is lower.*
- *Drive carefully and avoid bumps, holes, and sharp turns.*
- *Avoid locked-wheel braking.*
- *Do not use chains on a temporary spare tire; it may result in damage to the vehicle and to the tire.*
- *Do not use chains on roads that are free of snow or ice. The tires and chains could be damaged.*
- *Chains may scratch or chip aluminum wheels.*

NOTE
Use of tire chains on a vehicle equipped with P 245/50R20 specification tires could cause interference with the vehicle body and scratching. If tire chains are to be used, replace both front and rear tires with P245/60 R18 tires. Please consult an Authorized Mazda Dealer.

NOTE
If your vehicle is equipped with the tire pressure monitoring system, the system may not function correctly when using tire chains.

Install the chains on the front tires.
Do not use chains on the rear tires.
Use only genuine Mazda tire chains.
Please consult an Authorized Mazda Dealer.

Installing the chains

1. Secure the chains on the front tires as tightly as possible. Always follow the chain manufacturer's instructions.
2. Retighten the chains after driving 1/2—1 km (1/4—1/2 mile).

Driving In Flooded Area

WARNING

Dry wet brakes by driving very slowly and applying the brakes lightly until brake performance returns to normal:

Driving with wet brakes is dangerous. Increased stopping distance or the vehicle pulling to one side when braking could result in a serious accident. Light braking will indicate whether the brakes have been affected.

CAUTION

Do not drive the vehicle on flooded roads as it could cause short circuiting of electrical/electronic parts, or engine damage or stalling from water absorption. If the vehicle has been immersed in water, consult an Authorized Mazda Dealer.

Overloading

WARNING

Be careful not to overload your vehicle:

The gross axle weight rating (GAWR) and the gross vehicle weight rating (GVWR) of your vehicle are on the Motor Vehicle Safety Standard Label on the driver's door frame. Exceeding these ratings can cause an accident or vehicle damage. You can estimate the weight of your load by weighing the items (or people) before putting them in the vehicle.

Trailer Towing (Except Mexico)

Your Mazda was designed and built primarily to carry passengers and cargo.
If you tow a trailer, follow these instructions because driver and passenger safety depends on proper equipment and safe driving habits. Towing a trailer will affect handling, braking, durability, performance, and economy.
Never overload vehicle or trailer. Consult an Authorized Mazda Dealer if you need further details.

⚠ CAUTION

Don't tow a trailer during the first 1,000 km (600 miles) of your new Mazda. If you do, you may damage the engine, transaxle, differential, wheel bearings, and other power train components.

▼Weight Limits

TTW and GCWR

The total trailer weight (TTW), gross combination weight rating (GCWR), gross axle weight rating (GAWR), trailer load, and trailer tongue load must be within the prescribed limits.

- **The total trailer weight (TTW) is the sum of the weights of the trailer load (trailer weight plus cargo), trailer hitch, vehicle passengers, and vehicle load. Never allow the total trailer weight (TTW) to exceed specifications in the Trailer Towing-Load Table.**
- **The maximum GCWR is the combination weight of the trailer and load plus the towing vehicle (including trailer hitch, vehicle passengers, and load). It must not exceed specifications in the load table.**

GAWR and GVWR

Don't exceed front and rear GAWR (gross axle weight rating) and GVWR (gross vehicle weight rating). If you do, vehicle handling, braking, and performance will be affected. These values are also on the Motor Vehicle Safety Certification Label posted on the driver's door frame.

High-altitude operation

In a high-altitude operating environment, a gasoline engine loses power at a rate of 3% to 4% per 304 m (1,000 ft) of elevation. In these conditions, a reduction in gross vehicle weight and gross combination weight is recommended.

TRAILER TOWING-LOAD TABLE

Because vehicle weights vary, adjustments must be made to meet the requirements in this table.

Item			Model	
			Without Towing Package	With Towing Package
MAX. FRONTAL AREA			2.97 m^2 (32 ft^2)	4.65 m^2 (50 ft^2)
MAX. TTW	Add trailer's weight, load and hitch; vehicle passengers and vehicle load* * i.e. baggage, food, camp gear		907 kg (2,000 lb)	1,588 kg (3,500 lb)
MAX. GCWR			3,096 kg*1 (6,826 lb)	3,777 kg*1 (8,327 lb)
			3,201 kg*2 (7,057 lb)	3,882 kg*2 (8,558 lb)
MAX. GAWR		Front	1,271 kg*1 (2,802 lb)	
			1,307 kg*2 (2,881 lb)	
		Rear	1,390 kg*1 (3,064 lb)	
			1,456 kg*2 (3,210 lb)	
MAX. GVWR			2,633 kg*1 (5,805 lb)	
			2,733 kg*2 (6,025 lb)	
TRAILER-TONGUE LOAD	Tongue load		Tongue load/Trailer load × 100 = 10% to 15%	
	Trailer load			
DISTRIBUTION OF TRAILER LOAD		Front	60%	
		Rear	40%	

GCWR: Gross Combination Weight Rating (sum of TTW, vehicle weights and 2 passengers)
GAWR: Gross Axle Weight Rating
GVWR: Gross Vehicle Weight Rating
*1 2WD
*2 AWD

WARNING

Always keep tow loads within specified limits as indicated in the Trailer Towing-Load Table:

Attempting to tow loads greater than those specified is dangerous as it may cause serious handling and performance problems that could result in personal injury or vehicle damage, or both.

Load your trailer with the weight about 60% toward the front and 40% toward the rear:

Loading the trailer with more weight in the rear than in the front is dangerous. Doing so could cause you to lose control. The trailer tongue load must be 10%—15% of the total trailer load (sum of the weights of the trailer and cargo).

Always have the total trailer weight and tongue load determined prior to departure:

Attempting to tow loads without determining the total trailer weight and tongue load is dangerous. Trailer sway from crosswinds, rough roads or other causes could result in loss of control and a serious accident.

CAUTION

The total trailer weight and tongue load can be determined by weighing the trailer on platform scales at a highway weight station or a trucking company.

▼Trailer Hitch

Use only a hitch ball recommended by the trailer manufacturer that conforms to the gross trailer weight requirement.
When not towing a trailer, remove the trailer hitch (if detachable) to reduce the possibility of damage as a result of the vehicle being rear-ended.

⚠ WARNING

Always make sure the trailer hitch is securely attached before departure:

An unsecured trailer hitch is dangerous as it causes greater trailer sway from crosswinds, rough roads or other causes, resulting in loss of control and a serious accident.

Examine all trailer-hitch mounting bolts regularly and tighten any that are loose. If the hitch is removed, seal any open mounting holes to prevent exhaust, dust, water, dirt and other foreign elements from filtering in, possibly endangering personal safety and damaging your vehicle.

Do not install a hitch that stiffens the bumper as it will reduce the bumper's performance.

Make sure there are no exhaust gas leaks into the passenger compartment if any mounting bolts are connected to the body:

Modifying your vehicle exhaust system is dangerous. Exhaust gas entering the vehicle could cause loss of consciousness or even death.

When mounting the trailer hitch, make no modifications to the vehicle exhaust system.

⚠ CAUTION

- *Make all hitch adjustments with actual loads. Don't load and unload vehicle while adjusting hitch. This action will change the vehicle height.*
- *Don't use an axle-mounted hitch. This may damage the axle and related parts.*

▼Tires

When towing a trailer, make sure all tires are inflated to the recommended cold-tire pressure, as indicated on the tire pressure chart on the driver's door frame. Trailer tire size, load rating, and inflation pressures should conform to tire manufacturer specifications.

⚠ WARNING

Never use the temporary spare tire when towing:

Using the temporary spare tire on your vehicle when towing a trailer is dangerous as it could result in tire failure, loss of control, and injury to vehicle occupants.

▼Safety Chains

Safety chains must be used as a precautionary measure should the trailer become unintentionally unhitched. They should cross under the trailer tongue and attach to the hitch. Leave enough slack to allow full turns. Consult literature published by your trailer or hitch manufacturer for more details.

⚠ WARNING

Make sure the safety chain is securely attached to both the trailer and the vehicle prior to departure:

Towing a trailer without using a safety chain securely attached to both the trailer and the vehicle is dangerous. If damage occurs to the coupling unit or hitch ball, the trailer could wander into another lane and cause a collision.

▼Trailer Lights

Trailer lights must comply with all federal, state, and local regulations. Equip your trailer as required before towing it day or night.

⚠ CAUTION

Don't connect a trailer lighting system directly to the lighting system of your Mazda. This may damage your vehicle's electrical system and lighting systems. Have a recreational vehicle dealer or trailer rental agency connect the system, and inspect the brake lights and turn signals yourself before each trip.

▼Trailer Brakes

If the total trailer weight exceeds 450 kg (1,000 lb), trailer brakes are required. If your trailer has brakes, make sure they comply with all federal, state, and local regulations.

⚠ WARNING

Do not connect a hydraulic trailer-brake system to your vehicle's brake system:

Connecting a hydraulic trailer-brake system directly to the vehicle brake system is dangerous and will result in inadequate braking and possible injury.

▼Trailer Towing Tips

- Verify that your Mazda maintains a near-normal attitude when a loaded or unloaded trailer is connected. Don't drive if it has an abnormal front-up or front-down position. Inspect for incorrect tongue load, worn suspension parts, and trailer overloading.
- Make sure the trailer is properly loaded and the cargo is secure to prevent it from shifting.
- Make sure the mirrors conform to all government regulations. If they do not, install required rear view mirrors appropriate for towing purposes.

The three main causes of vehicle-trailer accidents are driver error, excessive speed, and improper trailer loading.

Before driving

- Have your cooling and braking system checked by an Authorized Mazda Dealer.
- Before starting out, inspect the operation of all vehicle and trailer lights and all vehicle-to-trailer connections. Stop and re-inspect all lights and connections after driving a short distance.

Driving

- Your Mazda will handle differently with a trailer in tow, so practice turning, backing, and stopping in a traffic-free area.
- Take time to get accustomed to the extra weight and length.
- Allow more room between your vehicle and the one in front because braking distance increases with a trailer. For each 16 km/h (10 mph) of speed, allow at least one vehicle and trailer length between your Mazda and the vehicle ahead.
- Avoid jerky starts or sudden acceleration.
- Avoid sudden braking. It may cause loss of control and result in jackknifing, especially so on wet or slippery roads.
- Shift the shift lever to the D position when towing a trailer in hilly terrain or when heavily loaded.

These positions will allow operating the vehicle without frequent shifting.

Lane changes and turning

Avoid quick lane changes, sudden turns, and tight turns. Slow down before turning to avoid the need of sudden braking.
A turning trailer will make a tighter arc than the tow vehicle. Compensate with turns that are larger than normal.

Passing

Plan well ahead to pass other vehicles, and provide plenty of room before changing lanes.
Crosswinds from passing vehicles, especially larger ones, and the effects of rough roads will affect handling.
If swaying occurs, firmly grip the steering wheel and reduce speed immediately, but gradually.
Steer straight ahead. If no extreme correction of steering or braking is made, the combination of less speed and firm steering will result in stability.

Backing up

Backing a vehicle with a trailer requires practice and patience. Back slowly, and have a helper outside at the rear of the trailer to reduce the risk of an accident.
To turn the trailer, place your hand at the bottom of the steering wheel and turn it in the direction you want the trailer to go. Make only slight movements to prevent sharp or prolonged turning.

Ascending a hill

Shift into a lower gear to reduce the possibility of overloading or overheating the engine, or both.

Descending a hill

Shift into a lower gear and use engine compression as a braking effect.

WARNING

Always use lower gears to reduce speed:

Holding the brake pedal down too long or too frequently is dangerous as it could cause the brakes to overheat and lose power, resulting in loss of control and a serious accident. Use lower gears to help reduce speed. Pull off the road and allow brakes to cool down whenever braking performance feels reduced.

Overheated engine

The extra weight of the trailer may strain the engine on hot days and on long or steep upgrades.
If the temperature gauge indicates overheating, turn off the air conditioner, drive safely to the side of the road, park off the right-of-way and wait for engine to cool. Refer to Overheating (page 7-14).

Parking

Always make sure the tires of the trailer and the tow vehicle are blocked while parked. Apply the parking brake firmly and put the transaxle in P.

Avoid parking on an incline, but if you must, follow these instructions:

1. Depress and hold down the brake pedal.
2. Have a helper put wheel blocks against the downhill side of all vehicle and trailer tires.
3. Then release the brake pedal slowly until the blocks bear the load.
   - If the grade is downhill, turn the steering wheel so that the front of the front tires face the curb.
   - If it is uphill, face the rear of the front tires against the curb.
4. Firmly apply the parking brake.
5. Shift the transaxle into P, and stop the engine.

To restart after parking on an incline:

1. With the transaxle in P, start the engine. (Be sure to depress and hold the brake pedal.)
2. Shift into gear.

3. Release the parking brake (also the foot brake) and pull away from the wheel blocks. Stop; apply the parking brake and shift into P.
4. Have a helper retrieve the wheel blocks.

Fuel consumption

Trailer towing causes higher fuel consumption.

Maintenance

If you tow a trailer frequently, have your vehicle serviced as shown in Scheduled Maintenance (page 8-3).

5 Driving Your Mazda

Explanation of instruments and controls.

Starting and Driving 5-2
Ignition Switch 5-2
Starting the Engine 5-4
Brake System 5-5
Automatic Transaxle Controls 5-10
Power Steering 5-16
All-Wheel Drive (AWD) Operation* 5-16
Cruise Control 5-19
Traction Control System (TCS) 5-22
Dynamic Stability Control (DSC)/Roll Stability Control (RSC) 5-25
Tire Pressure Monitoring System* 5-27
Blind Spot Monitoring (BSM) System* 5-33

Instrument Cluster and Indicators 5-37
Meters and Gauges 5-37

Warning/Indicator Lights and Beep Sounds 5-41
Warning/Indicator Lights 5-41
Beep Sounds 5-56

Switches and Controls 5-58
Lighting Control 5-58
Turn and Lane-Change Signals 5-61
Fog Lights* 5-62
Windshield Wipers and Washer 5-62
Rear Window Wiper and Washer 5-66
Rear Window Defroster 5-66
Horn 5-67
Hazard Warning Flasher 5-68

*Some models.

Ignition Switch

Auxiliary key (with advanced key)

NOTE
When starting the engine using the advanced key, refer to Starting the Engine (page 3-9).

When starting the engine with the auxiliary key, perform the following procedure.

1. Remove the auxiliary key from the advanced key (page 3-15).
2. Make sure the start knob is in LOCK position.
3. Remove the start knob by pulling it outward while pressing the buttons on both the left and right sides.

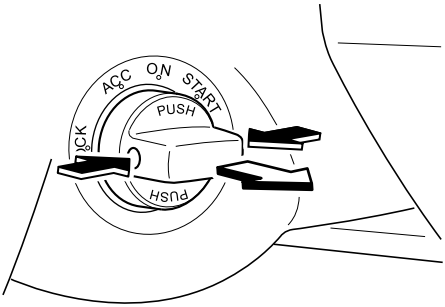

4. Insert the auxiliary key in the ignition switch.

▼Ignition Switch Positions

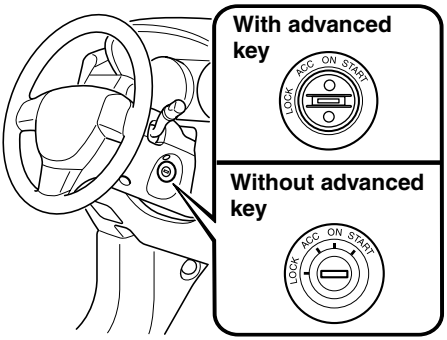

LOCK

The steering wheel locks to protect against theft. Only in this position can the key be removed.

⚠ WARNING

Remove the key only when the vehicle is parked:

Removing the key from the ignition switch while the vehicle is moving is dangerous. Removing the key allows the steering wheel to lock. You will lose steering control and a serious accident could occur. (For vehicles equipped with the advanced key, the steering wheel locks when the starter knob is turned to the LOCK position.)

Before leaving the driver's seat, always put the key or start knob to LOCK position, set the parking brake and make sure the shift lever is in P:

Intentionally placing the key or start knob into LOCK position is much more important where you will not be removing the key to leave the vehicle and because leaving it in other positions will disable some of the vehicle security systems and run the battery down.
Leaving the driver's seat without putting the ignition switch in LOCK position, setting the parking brake and the shift lever is in P is dangerous. Unexpected vehicle movement could occur. This could cause an accident.

NOTE

If turning the key is difficult, jiggle the steering wheel from side to side.
Leaving the key or start knob in any position but LOCK position also disables some of the security features and may run the battery down.

ACC (Accessory)

The steering wheel unlocks and some electrical accessories will operate.

ON

This is the normal running position after the engine is started. The warning lights (except brakes) should be inspected before the engine is started (page 5-41).

NOTE

When the ignition switch is turned to the ON position, the sound of the fuel pump motor operating near the fuel tank can be heard. This does not indicate an abnormality.

NOTE

Vibration of the brake pedal may be felt when the ignition switch is turned to the ON position, however, this is a normal operation of the DSC/RSC and does not indicate an abnormality.

START

The engine is started in this position. It will crank until you release the key; then it returns to the ON position. The brake warning light can be checked after the engine is started (page 5-41).

▼Ignition Key Reminder

If the ignition switch is in the LOCK or ACC position with the key inserted, a continuous beep sound will be heard when the driver's door is opened.

Starting the Engine

NOTE
Engine-starting is controlled by the spark ignition system.
This system meets all Canadian Interference-Causing Equipment Standard requirements regulating the impulse electrical field strength of radio noise.

1. Occupants should fasten their seat belts.
2. Make sure the parking brake is on.
3. Depress the brake pedal.
4. Put the vehicle in park (P). If you must restart the engine while the vehicle is moving, shift into neutral (N).

NOTE
The starter will not operate if the shift lever is ***not*** *in P or N.*

5. Turn the ignition switch to the START position and hold (up to 10 seconds at a time) until the engine starts.

⚠ CAUTION

Don't try the starter for more than 10 seconds at a time. If the engine stalls or fails to start, wait 10 seconds before trying again. Otherwise, you may damage the starter and drain the battery.

6. After starting the engine, let it idle for about 10 seconds.

NOTE
- *In extremely cold weather, below –18 °C (0 °F), or after the vehicle has not been driven in several days, let the engine warm up without operating the accelerator.*
- *Whether the engine is cold or warm, it should be started without use of the accelerator.*

Brake System

▼Foot Brake

Your Mazda has power-assisted brakes that adjust automatically through normal use.

Should power-assist fail, you can stop by applying greater force than normal to the brake pedal. But the distance required to stop will be greater than usual.

⚠ WARNING

Do not coast with the engine stalled or turned off, find a safe place to stop:

Coasting with the engine stalled or turned off is dangerous. Braking will require more effort, and the brake's power-assist could be depleted if you pump the brake. This will cause longer stopping distances or even an accident.

Shift to a lower gear when going down steep hills:

Driving with your foot continuously on the brake pedal or steadily applying the brakes for long distances is dangerous. This causes overheated brakes, resulting in longer stopping distances or even total brake failure. This could cause loss of vehicle control and a serious accident. Avoid continuous application of the brakes.

⚠ WARNING

Dry brakes that have become wet by driving very slowly and applying the brakes lightly until brake performance is normal:

Driving with wet brakes is dangerous. Increased stopping distance or the vehicle pulling to one side when braking could result in a serious accident. Light braking will indicate whether the brakes have been affected.

▼Parking Brake

⚠ WARNING

Before leaving the driver's seat, always put the key or start knob to LOCK position, set the parking brake and make sure the shift lever is in P:

Intentionally placing the key or start knob into LOCK position is much more important where you will not be removing the key to leave the vehicle and because leaving it in other positions will disable some of the vehicle security systems and run the battery down.
Leaving the driver's seat without putting the ignition switch in LOCK position, setting the parking brake and the shift lever is in P is dangerous. Unexpected vehicle movement could occur. This could cause an accident.

⚠ CAUTION

Driving with the parking brake on will cause excessive wear of the brake linings or pads.

NOTE
For parking in snow, refer to Winter Driving (page 4-9) regarding parking brake use.

Setting the parking brake

Depress the brake pedal, then depress the parking brake pedal fully.

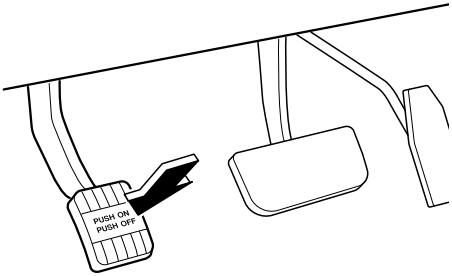

Releasing the parking brake

Depress the brake pedal, then depress the parking brake pedal until it releases. Gradually let up on the parking brake pedal.

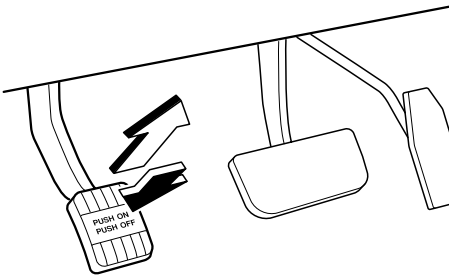

NOTE
Release the parking brake pedal once before trying to reapply it.

▼Brake System Warning Light

This warning has the following functions:

Parking brake warning

The light comes on when the parking brake is applied with the ignition switch in the START or ON position. It goes off when the parking brake is fully released.

Low brake fluid level warning

If the light stays on after the parking brake is fully released, you may have a brake problem.

Drive to the side of the road and park off the right-of-way.

You may notice that the pedal is harder to push or that it may go closer to the floor. In either case, it will take longer to stop the vehicle.

1. With the engine stopped, check the brake fluid level immediately and add fluid as required (page 8-23).
2. After adding fluid, check the light again.

If the warning light remains on, or if the brakes do not operate properly, do not drive the vehicle. Have it towed to an Authorized Mazda Dealer.

Even if the light goes out have your brake system inspected as soon as possible by an Authorized Mazda Dealer.

NOTE
Having to add brake fluid is sometimes an indicator of leakage. Consult an Authorized Mazda Dealer as soon as possible even if the brake light is no longer illuminated.

⚠ WARNING

Do not drive with the brake system warning light illuminated. Contact an Authorized Mazda Dealer to have the brakes inspected as soon as possible:
Driving with the brake system warning light illuminated is dangerous. It indicates that your brakes may not work at all or that they could completely fail at any time. If this light remains illuminated, after checking that the parking brake is fully released, have the brakes inspected immediately.

▼Parking Brake Reminder

If the parking brake has not been completely released and the vehicle is driven at about 5 km/h (3 mph) or faster, a continuous beep sound will be heard to notify the driver that the parking brake has not been released.

▼Anti-Lock Brake System (ABS)

The ABS control unit continuously monitors the speed of each wheel. If one is about to lock up, the ABS responds by automatically releasing and reapplying that wheel's brake.

The driver will feel a slight vibration in the brake pedal and may hear a chattering noise from the brake system. This is normal when the ABS operates. Don't pump the brakes, continue to press down on the brake pedal.

⚠ WARNING

Do not rely on ABS or RSC as a substitute for safe driving:
The ABS and RSC cannot compensate for unsafe and reckless driving, excessive speed, tailgating (following another vehicle too closely), driving on ice and snow, and hydroplaning (reduced tire friction and road contact because of water on the road surface). You can still have an accident.

NOTE
- *Braking distances may be longer on loose surfaces (snow or gravel, for example) which usually have a hard foundation. A vehicle with a normal braking system may require less distance to stop under these conditions because the tires will build up a wedge of surface layer when the wheels skid.*
- *The sound of the ABS operating may be heard when starting the engine or immediately after starting the vehicle. However, it does not indicate a malfunction.*

▼ABS Warning Light

The warning light stays on for a few seconds when the ignition switch is turned to the ON position.

If the ABS warning light stays on while you're driving, the ABS control unit has detected a system malfunction. If this occurs, your brakes will function normally as if the vehicle had no ABS.
Should this happen, consult an Authorized Mazda Dealer as soon as possible.

NOTE
When the engine is jump-started to charge the battery, uneven rpm occurs and the ABS warning light comes on. This is due to a weak battery, not a malfunction.
Recharge the battery.

▼Electronic Brake Force Distribution System Warning

If the electronic brake force distribution control unit determines that some components are operating incorrectly, the control unit may turn the brake system warning light and the ABS warning light on at the same time. The problem is likely to be the electronic brake force distribution system.

⚠ WARNING

Do not drive with both the ABS warning light and brake warning light illuminated. Have the vehicle towed to an Authorized Mazda Dealer to have the brakes inspected as soon as possible:

Driving when the brake system warning light and ABS warning light are illuminated at the same time is dangerous.
When both lights are illuminated, the rear wheels could lock more quickly in an emergency stop than under normal circumstances.

▼Brake Assist

During emergency braking situations when it is necessary to depress the brake pedal with greater force, the brake assist system provides braking assistance, thus enhancing braking performance.

When the brake pedal is depressed hard or depressed more quickly, the brakes apply more firmly.

NOTE
- *When the brake pedal is depressed hard or depressed more quickly, the pedal will feel softer but the brakes will apply more firmly. This is a normal effect of the brake assist operation and does not indicate an abnormality.*
- *The brake assist equipment does not supersede the functionality of the vehicle's main braking system.*

▼Brake Pad Wear Indicator

When the disc brake pads become worn, the built-in wear indicators contact the disc plates. This causes a screeching noise to warn that the pads should be replaced.

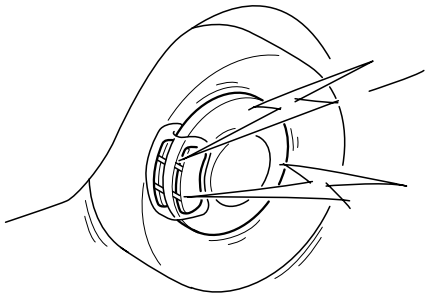

When you hear this noise, consult an Authorized Mazda Dealer as soon as possible.

⚠ WARNING

Do not drive with worn disc pads:
Driving with worn disc pads is dangerous. The brakes could fail and cause a serious accident. As soon as you hear a screeching noise consult an Authorized Mazda Dealer.

Automatic Transaxle Controls

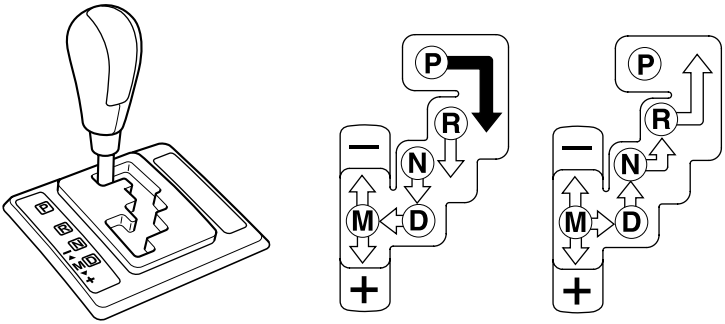

Various Lockouts:

➡ Indicates that you must depress the brake pedal to shift (The ignition switch must be in the ACC or ON position).

⇨ Indicates the shift lever can be shifted freely into any position.

NOTE

This Sport AT has an option that is not included in traditional automatic transaxle - giving the driver the option of selecting each gear instead of leaving it to the transaxle to shift gears. Even if you intend to use the automatic transaxle functions as a traditional automatic, you should also be aware that you can inadvertently shift into manual shift mode and an inappropriate gear may be retained as you change speeds. If you notice the engine speed going higher or hear the engine racing, confirm you have not accidentally slipped into manual shift mode (page 5-12).

▼Transaxle Ranges

The shift lever must be in P or N to operate the starter.

P (Park)

P locks the transaxle and prevents the front wheels from rotating.

⚠ WARNING

Always set the shift lever to P and set the parking brake:

Only setting the shift lever to the P position without using the parking brake to hold the vehicle is dangerous. If P fails to hold, the vehicle could move and cause an accident.

⚠ CAUTION

- *Shifting into P, N or R while the vehicle is moving can damage your transaxle.*
- *Shifting into a driving gear or reverse when the engine is running faster than idle can damage the transaxle.*

R (Reverse)

In position R, the vehicle moves only backward. You must be at a complete stop before shifting to or from R, except under rare circumstances as explained in Rocking the Vehicle (page 4-9).

N (Neutral)

In N, the wheels and transaxle are not locked. The vehicle will roll freely even on the slightest incline unless the parking brake or brakes are on.

⚠ WARNING

If the engine is running faster than idle, do not shift from N or P into a driving gear:

It's dangerous to shift from N or P into a driving gear when the engine is running faster than idle. If this is done, the vehicle could move suddenly, causing an accident or serious injury.

Do not shift into N when driving the vehicle:

Shifting into N while driving is dangerous. Engine braking cannot be applied when decelerating which could lead to an accident or serious injury.

⚠ CAUTION

Do not shift into N when driving the vehicle. Doing so can cause transaxle damage.

NOTE

Apply the parking brake or depress the brake pedal before moving the shift lever from N to prevent the vehicle from moving unexpectedly.

D (Drive)

D is the normal driving position. From a stop, the transaxle will automatically shift through a 6-gear sequence.

M (Manual)

M is the manual shift mode position. Gears can be shifted up or down by operating the shift lever.
Refer to Manual Shift Mode (page 5-12).

▼Active Adaptive Shift (AAS)

Active Adaptive Shift (AAS) automatically controls the transaxle shift points to best suit the road conditions and driver input. This optimizes engine performance and improves driving comfort. When cornering the vehicle, AAS mode will hold the transaxle in the gear the vehicle was in before entering the curve, allowing the vehicle to be accelerated from the same gear after exiting the curve.
If the driver accelerates rapidly, or accelerates and decelerates rapidly by operating the accelerator and brake pedal for a certain period of time while the selector lever is in the D position, AAS mode could activate. When this occurs, AAS mode will maintain the transaxle in the optimum gear and the driver may sense that the transaxle is not shifting, however this does not indicate an abnormality.

▼Shift-Lock System

The shift-lock system prevents shifting out of P unless the brake pedal is depressed.

To shift from P:

1. Depress and hold the brake pedal.
2. Start the engine.
3. Move the shift lever.

NOTE

- *When the ignition switch is in the LOCK position, the shift lever cannot be shifted from P.*
- *To be sure the vehicle is in park,* ***the ignition key cannot be removed unless the shift lever is in P.***
- ***(With Advanced Key)***
  The ignition switch cannot be turned from the ACC position to the LOCK position when the shift lever is not in P.

▼Manual Shift Mode

This mode gives you the feel of driving a manual transaxle vehicle by operating the shift lever and allows you to control engine rpm and torque the drive wheels much like a manual transaxle when more control is desired.

To change to manual shift mode, shift the lever from D to M.

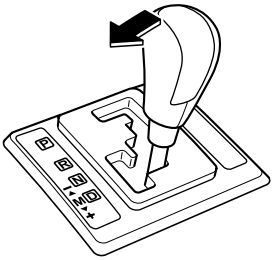

To return to automatic shift mode, shift the lever from M to D.

NOTE

If you change to manual shift mode when the vehicle is stopped, the gear will shift to M1.

Indicators

Shift position indicator

In manual shift mode, the “M” of the shift position indicator in the instrument panel illuminates.

Gear position indicator

The numeral for the selected gear illuminates.

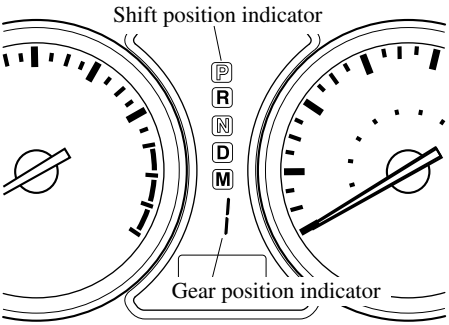

NOTE

If the gears cannot be shifted down when driving at higher speeds, the gear position indicator will flash twice to signal that the gears cannot be shifted down.

Shifting

Manually Shifting up

(M1→M2→M3→M4→M5→M6)

To shift up to a higher gear, tap the shift lever back (+) once.

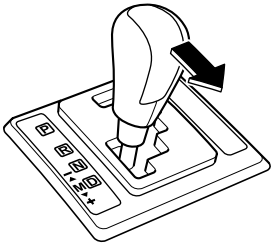

NOTE

- *When driving slowly, the gears may not shift up depending on vehicle speed.*
- *In manual shift mode, gears do not shift up automatically. Don't run the engine with the tachometer needle in the RED ZONE. If the tachometer needle enters the RED ZONE, you may feel engine-braking because the fuel delivery will be stopped to protect the engine. However, this does not indicate an abnormality.*
- *When depressing the accelerator fully, the transaxle will shift to a lower gear, depending on vehicle speed.*

Manually Shifting down

(M6→M5→M4→M3→M2→M1)

To shift down to a lower gear, tap the shift lever forward (−) once.

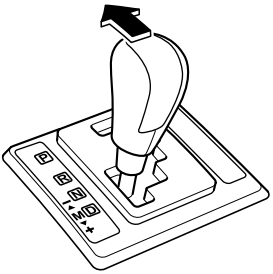

⚠ WARNING

Do not use engine braking on slippery road surfaces or at high speeds:

Shifting down while driving on wet, snowy, or frozen roads, or while driving at high speeds causes sudden engine braking, which is dangerous. The sudden change in tire speed could cause the tires to skid. This could lead to loss of vehicle control and an accident.

NOTE

- *When driving at high speeds, the gear may not shift down depending on vehicle speed.*
- *During deceleration, the gear may automatically shift down depending on vehicle speed.*
- *When depressing the accelerator fully, the transaxle will shift to a lower gear, depending on vehicle speed.*

Second gear fixed mode

When the shift lever is tapped back (+) while the vehicle is stopped, the transaxle is set in the second gear fixed mode. The gear is fixed in second while in this mode for easier starting and driving on slippery roads. If the shift lever is tapped back (+) or forward (−) while in the second gear fixed mode, the mode will be canceled.

Shifting specification

Shifting up

If the vehicle speed is lower than the speed specified for each gear, the gear cannot be shifted up to a higher gear.

Gear	Vehicle speed
M1→M2	You can shift up to M2 whether the vehicle is stopped or moving.
M2→M3	15 km/h (10 mph)
M3→M4	29 km/h (19 mph)
M4→M5	40 km/h (25 mph)
M5→M6	50 km/h (32 mph)

Shifting down

If the vehicle speed is higher than the speed specified for each gear, the gear cannot be shifted down to a lower gear.

Gear	Vehicle speed
M6→M5	230 km/h (142 mph)
M5→M4	201 km/h (124 mph)
M4→M3	150 km/h (93 mph)
M3→M2	96 km/h (59 mph)
M2→M1	49 km/h (30 mph)

During deceleration, the gears shift down automatically when speed is reduced to the following:

Gear	Vehicle speed
M6→M5	47 km/h (29 mph)
M5→M4	37 km/h (22 mph)
M4→M3	26 km/h (16 mph)
M3 or M2→M1	9 km/h (5 mph)

NOTE
The gear does not shift down to M1 automatically while in the second gear fixed mode.

If the vehicle is kicked down at the following speeds or lower, the gears shift down automatically:

Gear	Vehicle speed
M6→M5	230 km/h (142 mph)
M5→M4	90 km/h (55 mph)
M4→M3	65 km/h (40 mph)
M3→M2	40 km/h (24 mph)

Recommendations for shifting

Upshifting

For normal acceleration and cruising, we recommend these shift points.

Gear	Vehicle speed
M1 to M2	24 km/h (15 mph)
M2 to M3	40 km/h (25 mph)
M3 to M4	65 km/h (40 mph)
M4 to M5	73 km/h (45 mph)
M5 to M6	80 km/h (50 mph)

Downshifting

When you must slow down in heavy traffic or on a steep **upgrade**, downshift before the engine starts to overwork. This gives better acceleration when you need more speed.

On a steep **downgrade**, downshifting helps maintain safe speed and prolongs brake life.

▼Driving Tips

Passing

For extra power when passing another vehicle or climbing steep grades, depress the accelerator fully. The transaxle will shift to a lower gear, depending on vehicle speed.

Climbing steep grades from a stop

To climb a steep grade from a stopped position:

1. Depress the brake pedal.
2. Shift to D or M1, depending on the load weight and grade steepness.
3. Release the brake pedal while gradually accelerating.

Descending steep grades

When descending a steep grade, shift to lower gears, depending on load weight and grade steepness. Descend slowly, using the brakes only occasionally to prevent them from overheating.

Power Steering

Power steering is only operable when the engine is running. If the engine is off or if the power steering system is inoperable, you can still steer, but it requires more physical effort.

If the steering feels stiffer than usual during normal driving, consult an Authorized Mazda Dealer.

⚠ CAUTION

Never hold the steering wheel to the extreme left or right for more than 5 seconds with the engine running. This could damage the power steering system.

All-Wheel Drive (AWD) Operation *

AWD provides excellent driveability on snow-covered and ice-packed roads, sand and mud, as well as on steep slopes and other slippery surfaces.

*Some models.

▼AWD Driving

⚠ WARNING

Avoid sharp turns, excessive speed and abrupt maneuvers when driving this vehicle:

Sharp turns, excessive speed and abrupt maneuvering of this vehicle is dangerous as it could result in the increased risk of loss of vehicle control, vehicle roll-over, personal injury or death.
This vehicle has a higher center of gravity. Vehicles with a higher center of gravity such as utility and AWD vehicles handle differently than vehicles with a lower center of gravity.
Utility and AWD vehicles are not designed for cornering at speeds as any more than low profile sports cars are designed to perform satisfactorily under off-road conditions. In addition, utility vehicles have a significantly higher rollover rate than other types of vehicles.
RSC might help if you get into trouble, but then it might not be able to allow you to fully recover, always drive carefully with the vehicle's height in mind.

Drive carefully when the vehicle is loaded by lowering vehicle speed and applying the brakes earlier:

Abrupt maneuvering and sudden braking when driving a loaded vehicle is dangerous as the driving behavior of a vehicle with a high center of gravity is different when it is loaded compared to when it is not, and could result in the loss of vehicle control and an accident.

▼AWD Warning Light

4WD

This warning light stays on for a few seconds when the ignition switch is turned to the ON position.
Thereafter, the warning light will illuminate or flash under the following conditions:

- Illuminates when there is an abnormality with the AWD system.
- Flashes when the differential oil temperature is abnormally high.
- Flashes when there are continually large differences between front and rear wheel rotation, such as when trying to pull away from an icy surface.

<u>If the AWD warning light illuminates:</u>

If the AWD warning light illuminates, contact an Authorized Mazda Dealer.

<u>If the AWD warning light flashes:</u>

Park the vehicle in a safe place. After a few moments; if the warning light stops flashing, you can resume driving. If the light does not stop flashing, contact an Authorized Mazda Dealer.

⚠ WARNING

Never spin a wheel that is off the ground:

Spinning a wheel that is off the ground as a result of the vehicle being stuck or in a ditch is dangerous. The drive assembly could be seriously damaged which could lead to an accident or could even lead to overheating, oil leakage, and a fire.

▼Tires and Tire Chains

The condition of the tires plays a large role in the performance of the vehicle. Moreover, to prevent adverse effects to the drive assembly, please note the following:

Tires

- When replacing tires, always replace all front and rear tires at the same time.
- All tires must be of the same size, manufacture, brand and tread pattern. Pay particular attention when equipping snow or other types of winter tires.
- Do not mix tread-worn tires with normal tires.
- Inspect tire inflation pressures at the specified periods and adjust to the specified pressures.

NOTE

Check the tire inflation pressure label attached to driver's door frame for the correct tire inflation pressure.

- Make sure to equip the vehicle with genuine wheels of the specified size, on all wheels. With AWD, the system is calibrated for all four wheels being of the same dimensions.

Tire chains

- Install tire chains to the front tires.
- Do not use tire chains on the rear wheels.
- Do not drive the vehicle faster than 30 km/h (19 mph) with the tire chains installed.
- Do not drive the vehicle with tire chains on road conditions other than snow or ice.

▼Towing

If the vehicle requires towing, have it towed with all four wheels completely off the ground(page 7-20).

Cruise Control

With cruise control, you can set and automatically maintain any speed of more than about 30 km/h (19 mph).

⚠ WARNING

Do not use the cruise control under the following conditions:

Using the cruise control under the following conditions is dangerous and could result in loss of vehicle control.

- *Hilly terrain*
- *Steep inclines*
- *Heavy or unsteady traffic*
- *Slippery or winding roads*
- *Similar restrictions that require inconsistent speed*

▼Cruise Main Indicator Light (Amber)/Cruise Set Indicator Light (Green)

CRUISE

The indicator light has two colors.

Cruise Main Indicator Light (Amber)

The indicator light illuminates amber when the ON/OFF switch is pressed up and the cruise control system is activated.

Cruise Set Indicator Light (Green)

The indicator light illuminates green when a cruising speed has been set.

▼Activation/Deactivation

To activate the system, press up on the ON/OFF switch.
The cruise main indicator light illuminates.

To deactivate the system, press down on the ON/OFF switch.
The cruise main indicator light turns off.

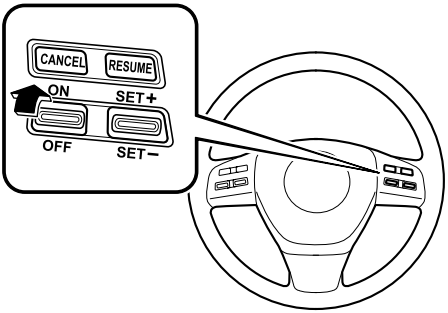

⚠ WARNING

Keep the ON/OFF switch off when cruise control is not in use:

Leaving the ON/OFF switch on when not using the cruise control is dangerous as you may hit one of the other buttons and put the vehicle in cruise control unexpectedly. This could result in loss of vehicle control.

▼To Set Speed

1. Activate the cruise control system by momentarily pressing up the ON/OFF switch.
2. Accelerate to the desired speed, which must be more than 30 km/h (19 mph).

3. Press down or press up on the cruise control SET +/SET - switch and release it at the speed you want. Release the accelerator at the same time.

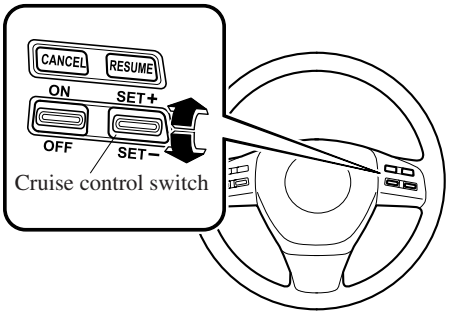

NOTE

- *Release the cruise control switch at the desired speed, otherwise the speed will continue increasing while the switch is pulled up, and continue decreasing while it is pulled down (except when the accelerator pedal is depressed).*
- *The SET function can't be activated until about 2 seconds after the ON/OFF switch has been engaged.*
- *On a steep grade, the vehicle may momentarily slow down going up or speed up while going down.*
- *Cruise control will turn off if vehicle speed drops below 30 km/h (19 mph) when cruise is activated, such as when climbing a steep grade.*

▼To Increase Cruising Speed

Follow either of these procedures.

To increase speed using cruise control switch

Press up on the cruise control SET + switch and hold it. Your vehicle will accelerate.
Release the switch at the speed you want.

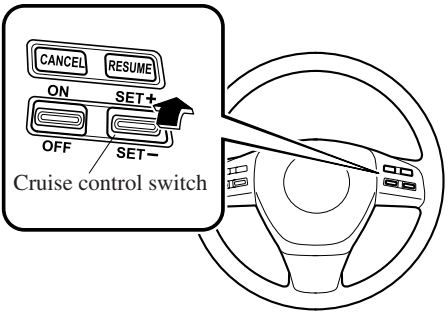

Your vehicle has a tap-up feature that allows you to increase your current speed in increments of 1.6 km/h (1 mph) by a momentary tap of the cruise control switch. Multiple taps will increase your vehicle speed 1.6 km/h (1 mph) for each tap.

To increase speed using accelerator pedal

Depress the accelerator pedal to accelerate to the desired speed.
Press down or press up on the cruise control SET +/SET - switch and release it immediately.

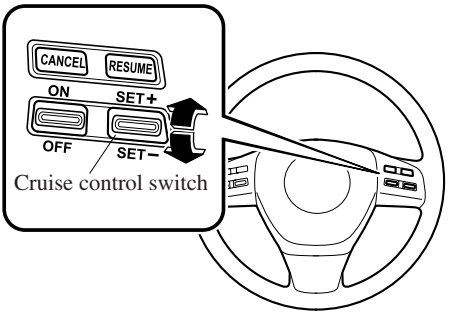

NOTE
Accelerate if you want to speed up temporarily when the cruise control is on. Greater speed will not interfere with or change the set speed. Take your foot off the accelerator to return to the set speed.

▼To Decrease Cruising Speed

Press down the cruise control SET - switch and hold it. The vehicle will gradually slow.
Release the switch at the speed you want.

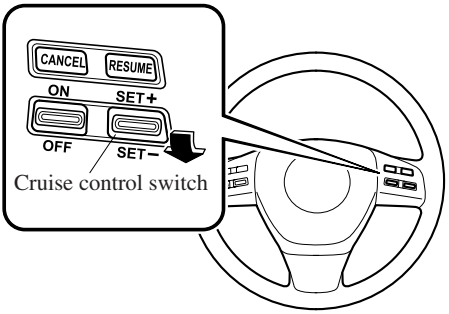

Your vehicle has a tap-down feature that allows you to decrease your current speed in decrements of 1.6 km/h (1 mph) by a momentary tap of the cruise control switch. Multiple taps will decrease your vehicle speed 1.6 km/h (1 mph) for each tap.

▼To Resume Cruising Speed at More Than 30 km/h (19 mph)

If some other method besides the ON/OFF switch was used to cancel cruising speed (such as applying the brake pedal) and the system is still activated, the most recent set speed will automatically resume when the RESUME button is pressed.
If vehicle speed is below 30 km/h (19 mph), increase the vehicle speed up to 30 km/h (19 mph) and press the RESUME button.

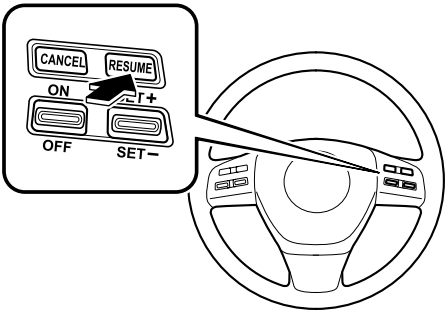

▼To Cancel

To cancel the system, use **one** of these methods:
- Pull down the ON/OFF switch.
- Slightly depress the brake pedal.

- Press the CANCEL button.

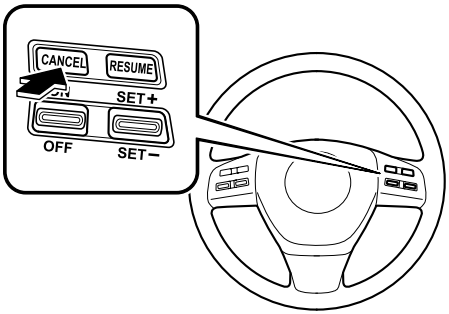

The system is off when the ignition is off.

NOTE
Cruise control will cancel at about 15 km/h (9 mph) below the preset speed (such as may happen when climbing a long, steep grade) or below 30 km/h (19 mph).

Traction Control System (TCS)

The Traction Control System (TCS) enhances traction and safety by controlling engine torque and braking. When the TCS detects driving wheel slippage, it lowers engine torque and operates the brakes to prevent loss of traction.

This means that on a slick surface, the engine adjusts automatically to provide optimum power to the drive wheels without causing them to spin and lose traction.

⚠ WARNING

Do not rely on the traction control system as a substitute for safe driving:
The traction control system (TCS) cannot compensate for unsafe and reckless driving, excessive speed, tailgating (following another vehicle too closely), and hydroplaning (reduced tire friction and road contact because of water on the road surface). You can still have an accident.

Use snow tires or tire chains on the front wheels only and drive at reduced speeds when roads are covered with ice and/or snow:
Driving without proper traction devices on snow and/or ice-covered roads is dangerous. The traction control system (TCS) alone cannot provide adequate traction and you could still have an accident.

⚠ CAUTION

Do not rely on the TCS to maintain constant control of the vehicle under severe or maximum handling conditions. If the TCS operates frequently due to severe driving conditions, the TCS may stop operating to protect the brakes from overheating. After the brakes have cooled down, the TCS resumes normal operation.

▼TCS/DSC Indicator Light

This indicator light stays on for a few seconds when the ignition switch is turned to the ON position. If the TCS or DSC is operating, the indicator light flashes.

If the light stays on, the TCS, DSC or the brake assist system may have a malfunction and they may not operate correctly. Take your vehicle to an Authorized Mazda Dealer.

NOTE

- *In addition to the indicator light flashing, a slight lugging sound will come from the engine. This indicates that the TCS is operating properly.*
- *On slippery surfaces, such as fresh snow, it will be impossible to achieve high rpm when the TCS is on.*

▼TCS OFF Indicator Light

TCS OFF

This indicator light stays on for a few seconds when the ignition switch is turned to the ON position.
It also illuminates when the TCS OFF switch is pressed and TCS is switched off. Refer to TCS OFF Switch on page 5-24.
If the light remains illuminated and the TCS is not switched off, take your vehicle to an Authorized Mazda Dealer. The dynamic stability control may have a malfunction.

NOTE

If the TCS/DSC indicator light and the TCS OFF indicator light remain illuminated even after turning the ignition switch to the ON position, attempt the procedure again. If this still does not work, consult an Authorized Mazda Dealer.

▼TCS OFF Switch

If the vehicle speed is less than 15 km/h (9 mph), press the TCS OFF switch to turn off the TCS. The TCS OFF indicator light will illuminate.

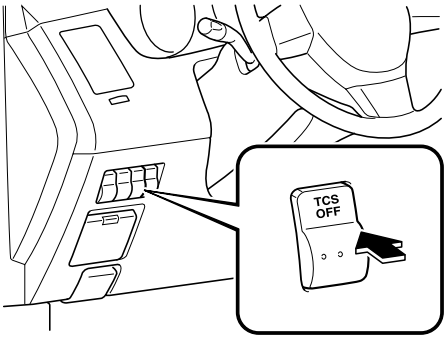

Press the switch again to turn the TCS back on. The TCS OFF indicator light will go out. If the vehicle speed is more than 15 km/h (9 mph), the TCS OFF indicator light will not illuminate even if the switch is pressed.

NOTE

- *When TCS is on and you attempt to free the vehicle when it is stuck, or drive it out of freshly fallen snow, the TCS will activate. Depressing the accelerator will not increase engine power and freeing the vehicle may be difficult. When this happens, turn off the TCS.*
- *If the TCS is off when the engine is turned off, it automatically activates when the ignition switch is turned on.*
- *Leaving the TCS on will provide the best traction.*
- *If the TCS is OFF when the vehicle speed is more than 15 km/h (9 mph), it automatically activates and the TCS OFF indicator light will turn off.*
- *If the TCS OFF switch is pressed and held for 10 seconds or more, the TCS OFF switch malfunction detection function operates and the TCS and DSC/RSC system activates automatically. The TCS OFF indicator light turns off while the TCS system is operative.*

Dynamic Stability Control (DSC)/Roll Stability Control (RSC)

The Dynamic Stability Control (DSC) automatically controls braking and engine torque in conjunction with systems such as ABS and TCS to help control side slip when driving on slippery surfaces or during sudden or evasive maneuvering, enhancing vehicle safety.

The Roll Stability Control (RSC) automatically controls braking and engine torque in conjunction with systems such as ABS and TCS to help control rolling when cornering at a higher speed or during sudden or evasive maneuvering, enhancing vehicle safety.

Refer to ABS (page 5-7) and TCS (page 5-22).

DSC/RSC operation is possible at speeds greater than 15 km/h (9 mph).

⚠ WARNING

Do not rely on the dynamic stability control as a substitute for safe driving:

The dynamic stability control (DSC)/ Roll Stability Control (RSC) cannot compensate for unsafe and reckless driving, excessive speed, tailgating (following another vehicle too closely), and hydroplaning (reduced tire friction and road contact because of water on the road surface). You can still have an accident.

When driving under bad road conditions, lower the vehicle speed and drive carefully:

Reckless driving and excessive speed under any road conditions is dangerous as it reduces vehicle stability and operability which could result in an accident.

⚠ CAUTION

- *The DSC/RSC may not operate correctly unless the following are observed:*
  - *Use tires of the correct size specified for your Mazda on all four wheels.*
  - *Use tires of the same manufacturer, brand and tread pattern on all four wheels.*
  - *Do not mix worn tires.*
- *The DSC/RSC may not operate correctly when tire chains are used or a temporary spare tire is installed because the tire diameter changes.*
- *Do not modify the suspension, steering wheel, and tires. It may affect the DSC/RSC.*
- *Do not install non-genuine speakers since their vibration may affect the DSC/RSC sensors.*

▼TCS/DSC/RSC Indicator Light

This indicator light stays on for a few seconds when the ignition switch is turned to the ON position. If the TCS or DSC/RSC is operating, the indicator light flashes.

If the light stays on, the TCS or DSC/RSC may have a malfunction and they may not operate correctly. Take your vehicle to an Authorized Mazda Dealer.

Tire Pressure Monitoring System*

The tire pressure monitoring system (TPMS) monitors the pressure for each tire.
If tire pressure is too low in one or more tires, the system will inform the driver via the warning light in the instrument panel and by the warning beep sound.

The tire pressure sensors installed on each wheel send tire pressure data by radio signal to the receiver unit in the vehicle.

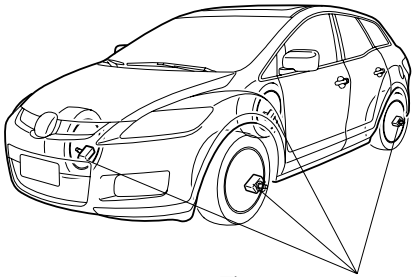

Tire pressure sensors

NOTE
When the ambient temperature is low due to seasonal changes, tire temperatures are also lower. When the tire temperature decreases, the air pressure decreases as well. The TPMS warning light may illuminate more frequently. Visually inspect the tires daily before driving, and check tire pressures monthly with a tire pressure gauge. When checking tire pressures, use of a digital tire pressure gauge is recommended.

TPMS does not alleviate your need to check the pressure and condition of all four tires regularly.

*Some models.

⚠ CAUTION

- *Each tire, including the spare (if provided), should be checked monthly when cold and inflated to the inflation pressure recommended by the vehicle manufacturer on the vehicle placard or tire inflation pressure label. (If your vehicle has tires of a different size than the size indicated on the vehicle placard or tire inflation pressure label, you should determine the proper tire inflation pressure for those tires.)*
  As an added safety feature, your vehicle has been equipped with a tire pressure monitoring system (TPMS) that illuminates a low tire pressure telltale when one or more of your tires is significantly under-inflated. Accordingly, when the low tire pressure telltale illuminates, you should stop and check your tires as soon as possible, and inflate them to the proper pressure. Driving on a significantly under-inflated tire causes the tire to overheat and can lead to tire failure. Under-inflation also reduces fuel efficiency and tire tread life, and may affect the vehicle's handling and stopping ability.
  Please note that the TPMS is not a substitute for proper tire maintenance, and it is the driver's responsibility to maintain correct tire pressure, even if under-inflation has not reached the level to trigger illumination of the TPMS low tire pressure telltale.
- *Your vehicle has also been equipped with a TPMS malfunction indicator to indicate when the system is not operating properly.*
  The TPMS malfunction indicator is combined with the low tire pressure telltale. When the system detects a malfunction, the telltale will flash for approximately one minute and then remain continuously illuminated. This sequence will continue upon subsequent vehicle start-ups as long as the malfunction exists. When the malfunction indicator is illuminated, the system may not be able to detect or signal low tire pressure as intended. TPMS malfunctions may occur for a variety of reasons, including the installation of replacement or alternate tires or wheels on the vehicle that prevent the TPMS from functioning properly. Always check the TPMS malfunction telltale after replacing one or more tires or wheels on your vehicle to ensure that the replacement or alternate tires and wheels allow the TPMS to continue to function properly.
- *To avoid false readings, the system samples for a little while before indicating a problem. As a result it will not instantaneously register a rapid tire deflation or blow out.*

NOTE

This device complies with part 15 of the FCC Rules. Operation is subject to the following two conditions: (1) This device may not cause harmful interference, and (2) this device must accept any interference received, including interference that may cause undesired operation.

▼Tire Pressure Monitoring System Warning Light

This warning light illuminates for a few seconds when the ignition switch is turned to the ON position.

Thereafter, the warning light illuminates and a beep is heard when tire pressure is too low in one or more tires, and flashes when there is a system malfunction.

⚠ WARNING

If the tire pressure monitoring system warning light illuminates or flashes, or the tire pressure warning beep sound is heard, decrease vehicle speed immediately and avoid sudden maneuvering and braking:

If the tire pressure monitoring system warning light illuminates or flashes, or the tire pressure warning beep sound is heard, it is dangerous to drive the vehicle at high speeds, or perform sudden maneuvering or braking. Vehicle drivability could worsen and result in an accident.
To determine if you have a slow leak or a flat, pull over to a safe position where you can check the visual condition of the tire and determine if you have enough air to proceed to a place where air may be added and the system monitored again, an Authorized Mazda Dealer or a tire repair station.

Do not ignore the TPMS Warning Light:

Ignoring the TPMS warning light is dangerous, even if you know why it is illuminated. Have the problem taken care of as soon as possible before it develops into a more serious situation that could lead to tire failure and a dangerous accident.

Warning light illuminates/Warning beep sounds

When the warning light illuminates, and the warning beep sound is heard (about 3 seconds), tire pressure is too low in one or more tires.

Adjust the tire pressure to the correct tire pressure. Refer to the specification charts (page 10-6).

CAUTION

When replacing/repairing the tires or wheels or both, have the work done by an Authorized Mazda Dealer, or the tire pressure sensors may be damaged.

NOTE

- *Perform tire pressure adjustment when the tires are cold. Tire pressure will vary according to the tire temperature, therefore let the vehicle stand for 1 hour or only drive it 1.6 km (1 mile) or less before adjusting the tire pressures. When pressure is adjusted on hot tires to the cold inflation pressure, the TPMS warning light/beep may turn on after the tires cool and pressure drops below specification.*
  Also, an illuminated TPMS warning light, resulting from the tire air pressure dropping due to cold ambient temperature, may go out if the ambient temperature rises. In this case, it will also be necessary to adjust the tire air pressures. If the TPMS warning light illuminates due to a drop in tire air pressure, make sure to check and adjust the tire air pressures.
- *After adjusting the tire air pressures, it may require some time for the TPMS warning light to go out. If the TPMS warning light remains illuminated, drive the vehicle at a speed of at least 25 km/h (16 mph) for 10 minutes, and then verify that it goes out.*
- *Tires can loose a little air quite naturally over time and the TPMS cannot tell if the tires are getting too soft over time or you have a flat. However, when you find one low tire in a set of four - that is an indication of trouble; you should have someone drive the vehicle slowly forward so you can inspect any low tire for cuts and any metal sticking through tread or sidewall. Put a few drops of water in the valve stem to see if it bubbles indicating a bad valve. Leaks need to be addressed by more than simply refilling the trouble tire as leaks are dangerous - take it to an Authorized Mazda Dealer which has all the equipment to fix tires, TPMS systems and order the best replacement tire for your vehicle.*

If the warning light illuminates again even after the tire pressures are adjusted, there may be a tire puncture. Replace the punctured tire with the temporary spare tire (page 7-8).

NOTE
A tire pressure sensor is not installed to the temporary spare tire. The warning light will flash continuously while the temporary spare tire is being used.

Warning light flashes

When the warning light flashes, there may be a system malfunction. Consult an Authorized Mazda Dealer.

▼System Error Activation

When the TPMS warning light flashes, there may be a system malfunction. Consult an Authorized Mazda Dealer.
A system error activation may occur in the following cases:

- When there is equipment or a device near the vehicle using the same radio frequency as that of the tire pressure sensors.
- When using the following devices in the vehicle that may cause radio interference with the receiver unit.
  - A digital device such as a personal computer.
  - A current converter device such as a DC-AC converter.
- When excess snow or ice adheres to the vehicle, especially around the wheels.
- When the tire pressure sensor batteries are exhausted.
- When using a wheel with no tire pressure sensor installed.
- When using tires with steel wire reinforcement in the side walls.
- When using tire chains.

▼Tires and Wheels

⚠ CAUTION

When inspecting or adjusting the tire air pressures, do not apply excessive force to the stem part of the wheel unit. The stem part could be damaged.

Changing tires and wheels

The following procedure allows the TPMS to recognize a tire pressure sensor's unique ID signal code whenever tires or wheels are changed, such as changing to and from winter tires.

NOTE
Each tire pressure sensor has a unique ID signal code. The signal code must be registered with the TPMS before it can work. The easiest way to do it is to have an Authorized Mazda Dealer change your tire and complete ID signal code registration.

When having tires changed at an Authorized Mazda Dealer

Tire pressure sensor ID signal code registration is completed when an Authorized Mazda Dealer changes your vehicle's tires.

When changing tires yourself

If you or someone else changes tires, you or someone else can also undertake the steps for the TPMS to complete the ID signal code registration.

1. After tires have been changed, turn the ignition switch to the ON position, then turn it back to the ACC or LOCK position.
2. Wait for about 15 minutes.

3. After about 15 minutes, drive the vehicle at a speed of at least 25 km/h (16 mph) for 10 minutes and the tire pressure sensor ID signal code will be registered automatically.

NOTE
If the vehicle is driven within about 15 minutes of changing tires, the tire pressure monitoring system warning light will flash because the sensor ID signal code would not have been registered. If this happens, park the vehicle for about 15 minutes, after which the sensor ID signal code will register upon driving the vehicle for 10 minutes.

Replacing tires and wheels

CAUTION

- *When replacing/repairing the tires or wheels or both, have the work done by an Authorized Mazda Dealer, or the tire pressure sensors may be damaged.*
- *The wheels equipped on your Mazda are specially designed for installation of the tire pressure sensors. Do not use non-genuine wheels, otherwise it may not be possible to install the tire pressure sensors.*

Be sure to have the tire pressure sensors installed whenever tires or wheels are replaced.
When having a tire or wheel or both replaced, the following types of tire pressure sensor installations are possible.

- The tire pressure sensor is removed from the old wheel and installed to the new one.
- The same tire pressure sensor is used with the same wheel. Only the tire is replaced.
- A new tire pressure sensor is installed to a new wheel.

NOTE
- *The tire pressure sensor ID signal code must be registered when a new tire pressure sensor is purchased. For purchase of a tire pressure sensor and registration of the tire pressure sensor ID signal code, consult an Authorized Mazda Dealer.*
- *When reinstalling a previously removed tire pressure sensor to a wheel, replace the grommet (seal between valve body/sensor and wheel) for the tire pressure sensor.*

Blind Spot Monitoring (BSM) System *

The Blind Spot Monitoring (BSM) system is designed to assist the driver by monitoring blind spots on both sides of the vehicle to the rear in certain situations such as when changing lanes on roads and freeways.

The BSM system monitors the detection areas on both sides of the vehicle to the rear when the vehicle speed is about 32 km/h (20 mph) or more, and notifies the driver of vehicles in the detection area by illuminating the BSM warning light.
If the turn signal lever is operated in the direction the BSM warning light is illuminated, the system warns the driver of the vehicle in the detection area with a beep sound.

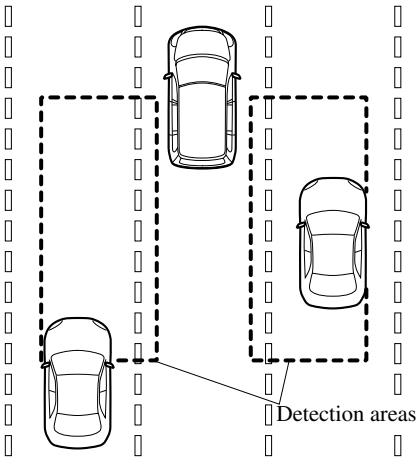

WARNING

Do not rely completely on the BSM system and be sure to look over your shoulder before changing lanes:

The BSM system can assist the driver in confirming the safety of the surroundings but is not a complete substitute. The driver is responsible for assuring lane changes and other maneuvers. Always pay attention to the direction in which the vehicle is traveling and the vehicle's surroundings.

NOTE

- *The BSM system does not operate when the vehicle speed is lower than about 32 km/h (20 mph).*
- *The radar sensors are equipped inside the rear bumper. (page 5-36)*
- *The system may not operate normally when towing a trailer. Turn off the system by operating the BSM OFF switch when towing a trailer.*
- *The radar sensors do not detect human, animal, or static objects such as fences. In addition, the system pauses when the selector lever is shifted to the R position. (The system resumes automatically when the selector lever is shifted from the R position.)*

*Some models.

- *The detectability of the radar sensors has its limitations. The BSM system may not operate properly under the following conditions:*
  - *Ice, snow, or soil adheres to the rear bumper surface around the radar sensors.*
  - *During adverse weather conditions such as rain or snow, or under conditions where water is sprayed.*
  - *The rear bumper area around the radar sensors is blocked by foreign material (such as stickers or a bicycle carrier).*
- *The radar sensors may not detect all types of vehicles around your vehicle, especially the following types of vehicles:*
  - *Motorcycles*
  - *Vehicles with body shapes that radar may not reflect such as a flatbed trailer with no cargo.*
  - *Vehicles with lower body height such as sports cars.*
- *Have the radar sensors inspected at an Authorized Mazda Dealer if any shock is applied to the rear bumper, even in a minor accident. If the vehicle is driven with a damaged radar sensor, the system may not operate properly resulting in an accident.*
- *For repairs or paintwork around the radar sensors, or replacement of the bumper, consult an Authorized Mazda Dealer.*
- *The radar sensors of the BSM system may be regulated under the radio wave related laws of the country where the vehicle is driven. The sensors in this system are approved for use in the U.S.A. (including territories), Canada, and Mexico. If a vehicle with BSM system is driven in a country other than the U.S.A., Canada, or Mexico, the system has to be turned off using the BSM OFF switch.*
- *The detection area of the system has been determined based on the lane width of general freeways. Therefore on a road with a narrower lane width, the system may detect vehicles on a lane next to the adjacent lane and operate the warning light/beep. On a road with wider lane width, the system may not detect vehicles on the adjacent lane and may not operate the warning light/beep.*
- *Operation of the warning light/beep may be delayed or the system may not operate the warning light/beep under the following conditions:*
  - *The vehicle accelerates from a standing-start with a vehicle alongside.*
  - *A vehicle moves from a lane two lanes over to the adjacent lane.*
  - *The difference in vehicle speed between your vehicle and another vehicle is larger when passing or being passed, and the vehicle passes the detection area within a short period of time.*
  - *On a steep incline, or when there is a difference in height between lanes.*
  - *Immediately after the system has been activated by pressing the BSM OFF switch again after it has been turned off (BSM OFF indicator light in instrument panel illuminates) by pressing the switch.*
- *Although the system may detect objects on the road side such as parked vehicles or guardrails and operate the warning light/beep, it does not indicate a malfunction.*
- *If the vehicle is driven on a road with less traffic and few vehicles that the radar sensors can detect, the system may pause (The BSM OFF indicator light in the instrument panel flashes). However, it does not indicate a malfunction.*

- *The following conditions may affect the visibility of the BSM warning lights on the outside mirror, making it difficult to confirm the illumination of the lights:*
  - *Ice or snow adheres to the surface of the outside mirrors.*
  - *The door window glass is darkened.*

▼BSM Warning Light/Beep

BSM warning light

Equipped on the left and right door mirrors.

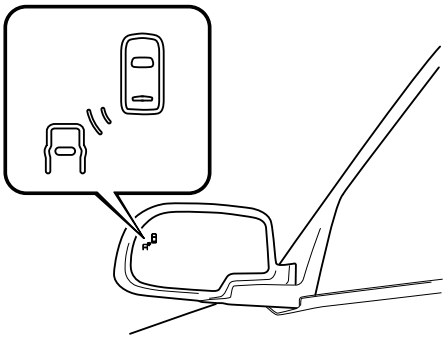

This warning light illuminates for a few seconds when the ignition switch is turned to the ON position.
If the BSM system detects a vehicle in the detection area while the vehicle is driven at a speed of about 32 km/h (20 mph) or more, the BSM warning light illuminates on the side of the vehicle where the rear on-coming vehicle is detected.

NOTE

- *If ice or snow adhere to the outer mirror surface, the BSM warning light may not be visible.*
- *If the door window glass is darkened, it may affect the visibility of the BSM warning light, making it difficult to confirm the illumination of the light.*

BSM warning beep

The warning beep operates when the turn signal lever is operated to either side where the BSM warning light is illuminated.

NOTE

The system can be customized so that the BSM warning beep does not operate. Consult an Authorized Mazda Dealer.

▼BSM OFF Indicator Light

This indicator light illuminates for a few seconds when the ignition switch is turned to the ON position.

The BSM OFF indicator light illuminates when the BSM system is turned off by pressing the BSM OFF switch.
The indicator light flashes if the BSM system has a malfunction. Consult an Authorized Mazda Dealer.

NOTE

If the vehicle is driven on a road with less traffic and few vehicles that the radar sensors can detect, the system may pause (The BSM OFF indicator light in the instrument panel flashes). However, it does not indicate a malfunction.

▼BSM OFF Switch

When the BSM switch is pressed, the BSM system turns off and the BSM OFF indicator light illuminates.

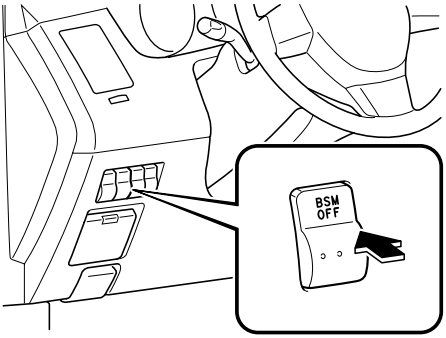

Press the BSM OFF switch again to turn on the BSM system. The BSM OFF indicator light turns off.

NOTE

- *The system may not operate normally when towing a trailer. Turn off the system by operating the BSM OFF switch when towing a trailer.*
- *If the ignition switch is turned to the LOCK position with the BSM system turned off, the system becomes operable automatically when the ignition switch is turned to the ON position.*

▼Care of Radar Sensors

The radar sensors are equipped inside the rear bumper.

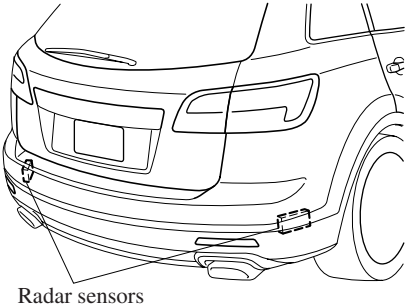

Always keep the bumper surface near the radar sensor area clean so that the BSM system operates normally. Refer to the Exterior Care (page 8-54).

NOTE

- *The BSM OFF indicator light flashes if the radar sensors cannot operate normally. If the light remains flashing after cleaning the bumper surface near the radar sensor area, consult an Authorized Mazda Dealer.*
- *For repairs or paintwork around the radar sensors, or replacement of the bumper, consult an Authorized Mazda Dealer.*

Meters and Gauges

When the ignition switch is in the ON position, the dashboard gauges illuminate.

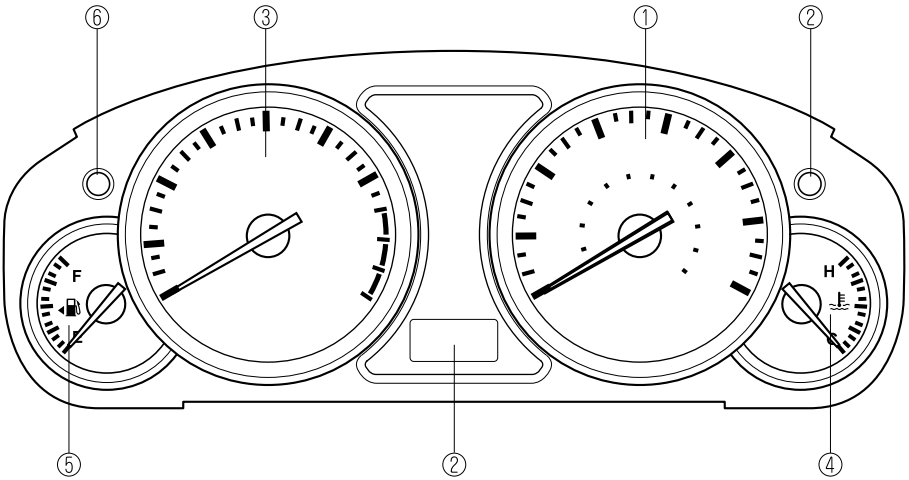

① Speedometer ..... page 5-38
② Odometer, Trip Meter and Trip Meter Selector ..... page 5-38
③ Tachometer ..... page 5-39
④ Engine Coolant Temperature Gauge ..... page 5-39
⑤ Fuel Gauge ..... page 5-40
⑥ Dashboard Illumination ..... page 5-40

▼Speedometer

The speedometer indicates the speed of the vehicle.

▼Odometer, Trip Meter and Trip Meter Selector

The display mode can be changed between trip meter A and trip meter B by pressing the selector while one of them is displayed. The selected mode will be displayed.

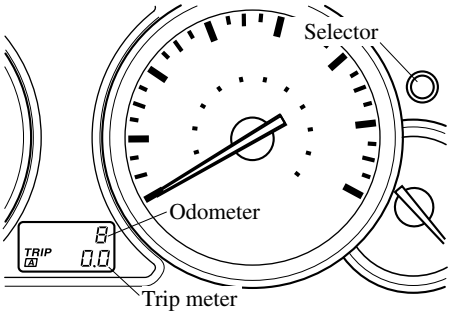

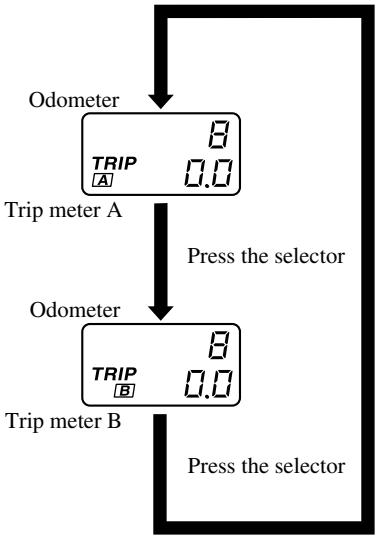

Odometer

The odometer records the total distance the vehicle has been driven.

Trip meter

The trip meter can record the total distance of two trips. One is recorded in trip meter A, and the other is recorded in trip meter B.

For instance, trip meter A can record the distance from the point of origin, and trip meter B can record the distance from where the fuel tank is filled.

When trip meter A is selected, pressing the selector again within one second will change to trip meter B mode.

When trip meter A is selected, TRIP A will be displayed. When trip meter B is selected, TRIP B will be displayed.

The trip meter records the total distance the vehicle is driven until the meter is again reset. Return it to “0.0” by holding the selector depressed for more than 1 second. Use this meter to measure trip distances and to compute fuel consumption.

NOTE

- *Only the trip meters record tenths of kilometers (miles).*
- *The trip record will be erased when:*
  - *The power supply is interrupted (blown fuse or the battery is disconnected).*
  - *The vehicle is driven over 999.9 km (mile).*

▼Tachometer

The tachometer shows engine speed in thousands of revolutions per minute (rpm).

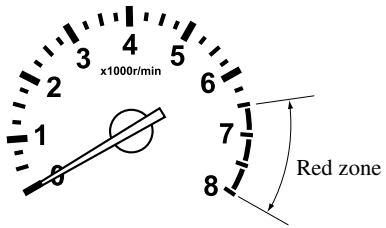

⚠ CAUTION

Don't run the engine with the tachometer needle in the RED ZONE. This may cause severe engine damage.

▼Engine Coolant Temperature Gauge

The engine coolant temperature gauge shows the temperature of the engine coolant.

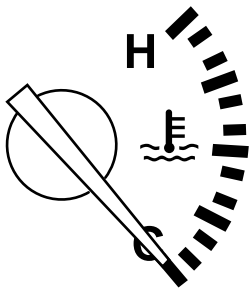

If the needle is near H, it indicates overheating.

⚠ CAUTION

Driving with an overheated engine can cause serious engine damage (page 7-14).

▼Fuel Gauge

The fuel gauge shows approximately how much fuel is in the tank. We recommend keeping the tank over 1/4 full. When the low fuel warning light illuminates or when the needle is near E, refuel as soon as possible.

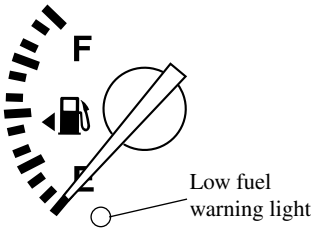

NOTE
The direction of the arrow ( ) shown next to the low fuel warning light indicates that the fuel-filler lid is on the left side of the vehicle.

▼Dashboard Illumination

Rotate the knob to adjust the brightness of the instrument cluster and other illuminations in the dashboard.

NOTE
- *The brightness of dashboard illuminations can be adjusted when the headlight switch is in the ● or position.*
- *When the dashboard illumination brightness cannot be adjusted any more, a beep sound will be heard.*
- ***(Black-out meter)***
  The brightness of the instrument cluster illumination can be adjusted when the headlight switch is in any position.

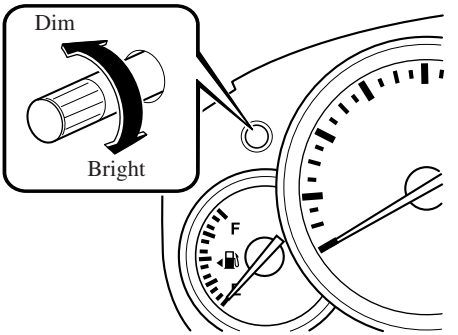

Canceling the illumination dimmer (Black-out meter and dashboard illuminations)

When the headlight switch is in the ● or position, the illumination of the instrument cluster and the information display dims.

When driving on snowy or foggy roads, or in other situations when the instrument cluster or information display's visibility is reduced due to glare from surrounding brightness, cancel the illumination dimmer and increase the illumination intensity.

To cancel the illumination dimmer, press the dashboard illumination knob.

NOTE
If the dashboard illumination knob is kept at the illumination dimmer cancel position, the instrument cluster and the information display will not dim when the headlight switch is turned to the ● or position again.

Warning/Indicator Lights

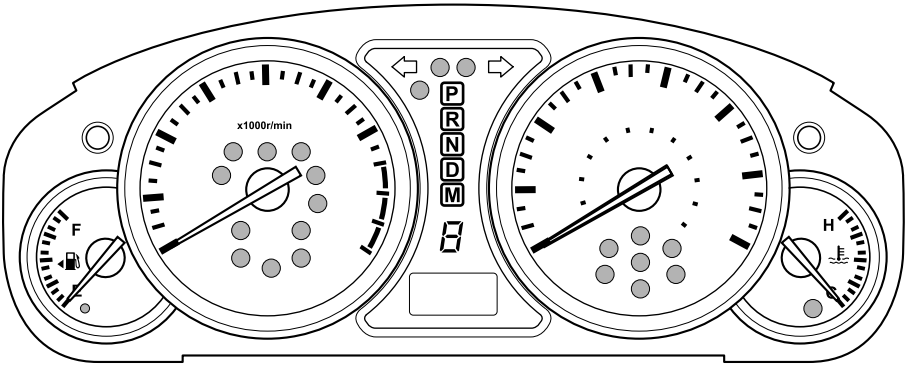

Warning/Indicator lights will appear in any of the highlighted areas

Signal	Warning/Indicator Lights	Page
BRAKE	Brake System Warning Light	5-43
	Charging System Warning Light	5-45
	Engine Oil Pressure Warning Light	5-45
	Check Engine Light	5-45
	Powertrain Malfunction/Reduced Power Warning Light	5-46
ABS	ABS Warning Light	5-44
	Air Bag/Front Seat Belt Pretensioner System Warning Light	5-46

Warning/Indicator Lights and Beep Sounds

Signal	Warning/Indicator Lights	Page
○	Low Fuel Warning Light	5-47
	Check Fuel Cap Warning Light	5-47
	Seat Belt Warning Light/Beep	5-47
	Door-Ajar Warning Light	5-49
	Low Washer Fluid Level Warning Light	5-49
AT	Automatic Transaxle Warning Light	5-49
4WD	AWD Warning Light	5-49
	Tire Pressure Monitoring System Warning Light	5-50
KEY	KEY Warning Light (Red)/KEY Indicator Light (Green)	5-52
	Security Indicator Light	5-53
	Headlight High-Beam Indicator Light	5-54
PRNDM	Shift Position Indicator Light	5-54
	TCS/DSC Indicator Light	5-54
TCS OFF	TCS OFF Indicator Light	5-55
CRUISE	Cruise Main Indicator Light (Amber)/Cruise Set Indicator Light (Green)	5-55
BSM OFF	BSM OFF Indicator Light	5-55

Signal	Warning/Indicator Lights	Page
	Light-On Indicator Light	5-56
	Turn Signal/Hazard Warning Indicator Lights	5-56

▼Brake System Warning Light

This warning has the following functions:

Parking brake warning

The light comes on when the parking brake is applied with the ignition switch in the START or ON position. It goes off when the parking brake is fully released.

Low brake fluid level warning

If the light stays on after the parking brake is fully released, you may have a brake problem.

Drive to the side of the road and park off the right-of-way.

You may notice that the pedal is harder to push or that it may go closer to the floor. In either case, it will take longer to stop the vehicle.

1. With the engine stopped, check the brake fluid level immediately and add fluid as required (page 8-23).
2. After adding fluid, check the light again.

If the warning light remains on, or if the brakes do not operate properly, do not drive the vehicle. Have it towed to an Authorized Mazda Dealer.

Even if the light goes out have your brake system inspected as soon as possible by an Authorized Mazda Dealer.

NOTE

Having to add brake fluid is sometimes an indicator of leakage. Consult an Authorized Mazda Dealer as soon as possible even if the brake light is no longer illuminated.

⚠ WARNING

Do not drive with the brake system warning light illuminated. Contact an Authorized Mazda Dealer to have the brakes inspected as soon as possible:

Driving with the brake system warning light illuminated is dangerous. It indicates that your brakes may not work at all or that they could completely fail at any time. If this light remains illuminated, after checking that the parking brake is fully released, have the brakes inspected immediately.

▼ABS Warning Light

The warning light stays on for a few seconds when the ignition switch is turned to the ON position.

If the ABS warning light stays on while you're driving, the ABS control unit has detected a system malfunction. If this occurs, your brakes will function normally as if the vehicle had no ABS.
Should this happen, consult an Authorized Mazda Dealer as soon as possible.

NOTE
When the engine is jump-started to charge the battery, uneven rpm occurs and the ABS warning light comes on. This is due to a weak battery, not a malfunction.
Recharge the battery.

▼Electronic Brake Force Distribution System Warning

If the electronic brake force distribution control unit determines that some components are operating incorrectly, the control unit may turn the brake system warning light and the ABS warning light on at the same time. The problem is likely to be the electronic brake force distribution system.

⚠ WARNING

Do not drive with both the ABS warning light and brake warning light illuminated. Have the vehicle towed to an Authorized Mazda Dealer to have the brakes inspected as soon as possible:

Driving when the brake system warning light and ABS warning light are illuminated at the same time is dangerous.
When both lights are illuminated, the rear wheels could lock more quickly in an emergency stop than under normal circumstances.

▼Charging System Warning Light

This warning light illuminates when the ignition switch is turned to the ON position and turns off when the engine is started.

If the warning light illuminates while driving, it indicates a malfunction of the alternator or of the charging system. Drive to the side of the road and park off the right-of-way. Consult an Authorized Mazda Dealer.

⚠ CAUTION

Don't continue driving when the charging system warning light is illuminated because the engine could stop unexpectedly.

▼Engine Oil Pressure Warning Light

This warning light illuminates when the ignition switch is turned to the ON position and turns off when the engine is started.

This warning light indicates low engine oil pressure.

If the light illuminates while driving:

1. Drive to the side of the road and park off the right-of-way on level ground.
2. Turn off the engine and wait 5 minutes for the oil to drain back into the oil pan.
3. Inspect the engine oil level (page 8-20). If it's low, add oil.
4. Start the engine and check the warning light.

If the light remains illuminated even after you add oil, stop the engine immediately and have your vehicle towed to an Authorized Mazda Dealer.

⚠ CAUTION

Don't run the engine if oil pressure is low. It could result in extensive engine damage.

▼Check Engine Light

This indicator light illuminates when the ignition switch is turned to the ON position and goes off when the engine is started.

If this light comes on while driving, the vehicle may have a problem. It is important to note the driving conditions when the light came on and consult an Authorized Mazda Dealer.

The check engine light may come on in the following cases:
- The fuel tank level being very low or approaching empty.
- The engine's electrical system has a problem.
- The emission control system has a problem.
- The fuel-filler cap is missing or not tightened securely.

If the check engine light remains on or flashes continuously, do not drive at high speeds and consult an Authorized Mazda Dealer as soon as possible.

▼Powertrain Malfunction/Reduced Power Warning Light

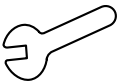

This warning light illuminates for a few seconds when the ignition switch is turned to the ON position.

If this light comes on while driving, the vehicle may have a problem. It is important to note the driving conditions when the light came on and consult an Authorized Mazda Dealer.

The powertrain malfunction/reduced power warning light may come on in the following cases:
- The engine's electrical system has a problem.
- The emission control system has a problem.

If the powertrain malfunction/reduced power warning light remains on, do not drive at high speeds and consult an Authorized Mazda Dealer as soon as possible.

▼Air Bag/Front Seat Belt Pretensioner System Warning Light

If the air bag/front seat belt pretensioner system is working properly, the warning light illuminates when the ignition switch is turned to the ON position or after the engine is cranked. The warning light turns off after a specified period of time.

A system malfunction is indicated if the warning light constantly flashes, constantly illuminates or does not illuminate at all when the ignition switch is turned to the ON position. If any of these occur, consult an Authorized Mazda Dealer as soon as possible. The system may not work in an accident.

⚠ WARNING

Never tamper with the air bag/ pretensioner systems and always have an Authorized Mazda Dealer perform all servicing and repairs:

Self-servicing or tampering with the systems is dangerous. An air bag/ pretensioner could accidentally activate or become disabled causing serious injury or death.

▼Low Fuel Warning Light

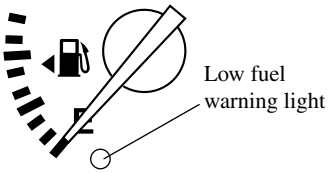

This warning light in the fuel gauge signals that the fuel tank will soon be empty.
Refuel as soon as possible.

▼Check Fuel Cap Warning Light

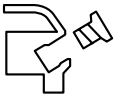

This warning light illuminates for a few seconds when the ignition switch is turned to the ON position.

If the check fuel cap warning light illuminates while driving, the fuel-filler cap may not be installed properly. Stop the engine and reinstall the fuel-filler cap. Refer to the fuel-filler cap on page 3-42.

▼Seat Belt Warning Light/Beep

The seat belt warning light illuminates and a beep sound will be heard if the driver's seat belt is not fastened when the ignition switch is turned to the ON position.

Conditions of operation

Condition	Result
The driver's seat belt is not fastened when the ignition switch is turned to the ON position.	The warning light flashes and a beep sound will be heard for about 6 seconds.
The driver's seat belt is fastened while the warning light and the beep sound are activated.	The warning light turns off and the beep sound stops.
The driver's seat belt is fastened before the ignition switch is turned to the ON position.	The warning light will not illuminate and the beep sound will not be heard.

Belt minder

NOTE
The belt minder can be deactivated. Consult an Authorized Mazda Dealer to deactivate and restore the seat belt minder.

Driver seated/Front passenger not seated

The belt minder is a supplemental warning to the seat belt warning function. If the driver's seat belt is not fastened when the ignition switch is turned to the ON position, the warning light/beep operates to give you further reminders according to the chart below.

Condition	Vehicle speed			
	Between 0 — 20 km/h (0 — 12 mph)		20 km/h (12 mph) or more	
Seat belt	○	×	○	×
Indicator				
Beep				♪

○ : Fastened
× : Unfastened
: Illuminated
: Flashing
♪ : Beep

Once the beep sound is heard, it continues sounding even if the vehicle speed lowers to 20 km/h (12 mph) or less until the seatbelt is fastened or the beep sound period has passed.

Driver seated/Front passenger seated

The seat belt warning function reminds the front passenger to fasten the seat belt according to the chart below.

Condition	Vehicle speed							
	Between 0 — 20 km/h (0 — 12 mph)				20 km/h (12 mph) or more			
Seat belt (Driver)	○	○	×	×	○	○	×	×
Seat belt (Passenger)	○	×	○	×	○	×	○	×
Indicator								
Beep						♪	♪	♪

○ : Fastened
× : Unfastened
: Illuminated
: Flashing
♪ : Beep

Placing heavy items on the front passenger seat may cause the front passenger seat belt warning function to operate depending on the weight of the item.

Once the beep sound is heard, it continues sounding even if the vehicle speed lowers to 20 km/h (12 mph) or less until the seatbelt is fastened or the beep sound period has passed.

NOTE

- *To allow the front passenger seat weight sensor to function properly, do not place and sit on an additional seat cushion on the front passenger seat. The sensor may not function properly because the additional seat cushion could cause sensor interference.*
- *When a small child sits on the front passenger seat, it is possible that neither the warning light nor the warning beep operate.*

▼Door-Ajar Warning Light

This warning light comes on when any door isn't securely closed.

▼Low Washer Fluid Level Warning Light*

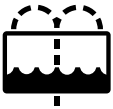

This warning light indicates that little washer fluid remains. Add fluid (page 8-26).

▼Automatic Transaxle Warning Light

AT

This warning light stays on for a few seconds when the ignition switch is turned to the ON position.
The light illuminates when the transaxle has a problem.

⚠ CAUTION

If the automatic transaxle warning light illuminates, the transaxle has an electrical problem. Continuing to drive your Mazda in this condition could cause damage to your transaxle. Consult an Authorized Mazda Dealer as soon as possible.

▼AWD Warning Light (AWD)

4WD

This warning light stays on for a few seconds when the ignition switch is turned to the ON position.
Thereafter, the warning light will illuminate or flash under the following conditions:

- Illuminates when there is an abnormality with the AWD system.
- Flashes when the differential oil temperature is abnormally high.
- Flashes when there are continually large differences between front and rear wheel rotation, such as when trying to pull away from an icy surface.

If the AWD warning light illuminates:

If the AWD warning light illuminates, contact an Authorized Mazda Dealer.

If the AWD warning light flashes:

Park the vehicle in a safe place. After a few moments; if the warning light stops flashing, you can resume driving. If the light does not stop flashing, contact an Authorized Mazda Dealer.

*Some models.

WARNING

Never spin a wheel that is off the ground:

Spinning a wheel that is off the ground as a result of the vehicle being stuck or in a ditch is dangerous. The drive assembly could be seriously damaged which could lead to an accident or could even lead to overheating, oil leakage, and a fire.

▼Tire Pressure Monitoring System (TPMS) Warning Light*

This warning light illuminates for a few seconds when the ignition switch is turned to the ON position.

Thereafter, the warning light illuminates and a beep is heard when tire pressure is too low in one or more tires, and flashes when there is a system malfunction.

WARNING

If the tire pressure monitoring system warning light illuminates or flashes, or the tire pressure warning beep sound is heard, decrease vehicle speed immediately and avoid sudden maneuvering and braking:

If the tire pressure monitoring system warning light illuminates or flashes, or the tire pressure warning beep sound is heard, it is dangerous to drive the vehicle at high speeds, or perform sudden maneuvering or braking. Vehicle drivability could worsen and result in an accident.
To determine if you have a slow leak or a flat, pull over to a safe position where you can check the visual condition of the tire and determine if you have enough air to proceed to a place where air may be added and the system monitored again, an Authorized Mazda Dealer or a tire repair station.

Do not ignore the TPMS Warning Light:

Ignoring the TPMS warning light is dangerous, even if you know why it is illuminated. Have the problem taken care of as soon as possible before it develops into a more serious situation that could lead to tire failure and a dangerous accident.

Warning light illuminates/Warning beep sounds

When the warning light illuminates, and the warning beep sound is heard (about 3 seconds), tire pressure is too low in one or more tires.

*Some models.

Adjust the tire pressure to the correct tire pressure. Refer to the specification charts (page 10-6).

⚠ CAUTION

When replacing/repairing the tires or wheels or both, have the work done by an Authorized Mazda Dealer, or the tire pressure sensors may be damaged.

NOTE

- *Perform tire pressure adjustment when the tires are cold. Tire pressure will vary according to the tire temperature, therefore let the vehicle stand for 1 hour or only drive it 1.6 km (1 mile) or less before adjusting the tire pressures. When pressure is adjusted on hot tires to the cold inflation pressure, the TPMS warning light/beep may turn on after the tires cool and pressure drops below specification.*
  Also, an illuminated TPMS warning light, resulting from the tire air pressure dropping due to cold ambient temperature, may go out if the ambient temperature rises. In this case, it will also be necessary to adjust the tire air pressures. If the TPMS warning light illuminates due to a drop in tire air pressure, make sure to check and adjust the tire air pressures.
- *After adjusting the tire air pressures, it may require some time for the TPMS warning light to go out. If the TPMS warning light remains illuminated, drive the vehicle at a speed of at least 25 km/h (16 mph) for 10 minutes, and then verify that it goes out.*
- *Tires can loose a little air quite naturally over time and the TPMS cannot tell if the tires are getting too soft over time or you have a flat. However, when you find one low tire in a set of four - that is an indication of trouble; you should have someone drive the vehicle slowly forward so you can inspect any low tire for cuts and any metal sticking through tread or sidewall. Put a few drops of water in the valve stem to see if it bubbles indicating a bad valve. Leaks need to be addressed by more than simply refilling the trouble tire as leaks are dangerous - take it to an Authorized Mazda Dealer which has all the equipment to fix tires, TPMS systems and order the best replacement tire for your vehicle.*

If the warning light illuminates again even after the tire pressures are adjusted, there may be a tire puncture. Replace the punctured tire with the temporary spare tire (page 7-8).

NOTE
A tire pressure sensor is not installed to the temporary spare tire. The warning light will flash continuously while the temporary spare tire is being used.

Warning light flashes

When the warning light flashes, there may be a system malfunction. Consult an Authorized Mazda Dealer.

▼KEY Warning Light (Red)/KEY Indicator Light (Green) (with Advanced Key)

KEY

This indicator has two colors.

KEY Warning Light (Red)

When illuminated

- When the ignition switch is turned to the ON position, it illuminates momentarily and then goes out.
- If any malfunction occurs in the advanced keyless system, it illuminates continuously.

⚠ WARNING

Do not drive the vehicle with the KEY warning light illuminated:
If the KEY warning light remains illuminated, do not continue to drive using the advanced key system. Park the vehicle in a safe place and use the auxiliary key to continue driving the vehicle. Have the vehicle inspected at an Authorized Mazda Dealer as soon as possible.

When flashing

- Under the following conditions, the KEY warning light (red) flashes to inform the driver that the start knob will not rotate to the ACC position even if it is pushed in from the LOCK position.
  - The advanced key battery is dead.
  - The advanced key is not within operational range.
  - The advanced key is placed in areas where it is difficult for the system to detect the signal (page 3-7).
  - A key from another manufacturer similar to the advanced key is in the operational range.

- Under the following conditions, the KEY warning light (red) will flash continuously when the start knob has not been returned to the LOCK position to notify the driver that the advanced key has been removed from the vehicle. It will stop flashing when the advanced key is back inside the vehicle.
  - The start knob has not been returned to the LOCK position, the driver's door is open, and the advanced key is removed from the vehicle.
  - The start knob has not been returned to the LOCK position and all the doors are closed after removing the advanced key from the vehicle.

NOTE
The flashing KEY warning light (red) and the beep sound operate simultaneously (page 3-20).

KEY Indicator Light (Green)

When illuminated

When the start knob is pushed in from the LOCK position, the system confirms that the correct advanced key is inside the vehicle, the KEY indicator light (green) illuminates, and the start knob can be turned to the ACC position (page 3-9).

When flashing

When the advanced key battery power is low, the KEY indicator light flashes for 30 seconds after the start knob is turned from the ON position to the ACC or LOCK position. Replace with a new battery before the advanced key becomes unusable (page 3-6).

NOTE
The advanced key can be set so that the KEY indicator light (green) does not flash even if the battery power is low.
Refer to Setting Change (Function Customization)(page 3-19).

▼Security Indicator Light

This indicator light starts flashing every 2 seconds when the ignition switch is turned from the ON to the ACC position and the immobilizer system is armed.

The light stops flashing when the ignition switch is turned to the ON position with the correct ignition key.
At this time, the immobilizer system is disarmed and the light illuminates for about 3 seconds and then goes out.

If the engine doesn't start with the correct ignition key, and the security indicator light keeps illuminating or flashing, the system may have a malfunction. Consult an Authorized Mazda Dealer.

▼Headlight High-Beam Indicator Light

This light indicates one of two things:
- The high-beam headlights are on.
- The turn signal lever is in the flash-to-pass position.

▼Shift Position Indicator Light

This indicates the selected shift position when the ignition switch is in the ON position.

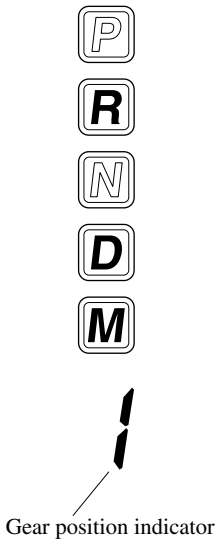

Gear position indicator

When the shift lever is in the D or M position, the numeral for the selected gear displays.

▼TCS/DSC Indicator Light

This indicator light stays on for a few seconds when the ignition switch is turned to the ON position. If the TCS or DSC/RSC is operating, the indicator light flashes.

If the light stays on, the TCS, DSC or the brake assist system may have a malfunction and they may not operate correctly. Take your vehicle to an Authorized Mazda Dealer.

▼TCS OFF Indicator Light

TCS
OFF

This indicator light stays on for a few seconds when the ignition switch is turned to the ON position.
It also illuminates when the TCS OFF switch is pressed and TCS is switched off. Refer to TCS OFF Switch on page 5-24.
If the light remains illuminated and the TCS is not switched off, take your vehicle to an Authorized Mazda Dealer. The dynamic stability control may have a malfunction.

NOTE
If the TCS/DSC indicator light and the TCS OFF indicator light remain illuminated even after turning the ignition switch to the ON position, attempt the procedure again. If this still does not work, consult an Authorized Mazda Dealer.

▼Cruise Main Indicator Light (Amber)/Cruise Set Indicator Light (Green)

CRUISE

The indicator light has two colors.

Cruise Main Indicator Light (Amber)

The indicator light illuminates amber when the ON/OFF switch pulled up and the cruise control system is activated.

Cruise Set Indicator Light (Green)

The indicator light illuminates green when a cruising speed has been set.

▼BSM OFF Indicator Light*

BSM
OFF

This indicator light illuminates for a few seconds when the ignition switch is turned to the ON position.

The BSM OFF indicator light illuminates when the BSM system is turned off by pressing the BSM OFF switch.
The indicator light flashes if the BSM system has a malfunction. Consult an Authorized Mazda Dealer.

NOTE
If the vehicle is driven on a road with less traffic and few vehicles that the radar sensors can detect, the system may pause (The BSM OFF indicator light in the instrument panel flashes). However, it does not indicate a malfunction.

*Some models.

▼Light-On Indicator Light

This indicator light comes on when the exterior lights and dashboard illumination are on.

▼Turn-Signal/Hazard Warning Indicator Lights

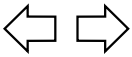

When operating the turn signal lights, the left or right turn signal indicator light flashes to indicate which turn signal light is operating (page 5-61).

When operating the hazard warning lights, both turn signal indicator lights flash (page 5-68).

NOTE
If an indicator light remains illuminated (does not flash) or if it flashes abnormally, one of the turn signal bulbs may be burned out.

Beep Sounds

▼Air Bag/Front Seat Belt Pretensioner System Warning Beep

If a malfunction is detected in both the air bag/front seat belt pretensioner system and the warning light, a warning beep sound will be heard for about 1 minute. After that, the one-minute beep will be repeated every 30 minutes.

Have your vehicle inspected at an Authorized Mazda Dealer as soon as possible.

⚠ WARNING

Do not drive the vehicle with the air bag/front seat belt pretensioner system warning beep sounding:
Driving the vehicle with the air bag/front seat belt pretensioner system warning beep sounding is dangerous. In a collision, the air bags and the front seat belt pretensioner system will not deploy and this could result in death or serious injury.
Contact an Authorized Mazda Dealer to have the vehicle inspected as soon as possible.

▼Seat Belt Warning Beep

If the driver's seat belt is not fastened when the ignition switch is turned to the ON position, a beep sound will be heard for about 6 seconds.
If the driver's seat belt is not fastened and the vehicle is driven at a speed faster than about 20 km/h (12 mph), a beep sound will be heard again for a specified period of time.
Refer to Seat Belt Warning Light/Beep on page 5-47.

▼Ignition Key Reminder

If the ignition switch is in the LOCK or ACC position with the key inserted, a continuous beep sound will be heard when the driver's door is opened.

▼Lights-On Reminder

If lights are on and the key is removed from the ignition switch, a continuous beep sound will be heard when the driver's door is opened.

NOTE
When the advanced keyless function is used and the start knob is in the ACC position, the "Start Knob Not in LOCK Warning Beep" (page 3-16) overrides the lights-on reminder.

▼Parking Brake Reminder

If the parking brake has not been completely released and the vehicle is driven at about 5 km/h (3 mph) or faster, a continuous beep sound will be heard to notify the driver that the parking brake has not been released.

▼Tire Inflation Pressure Warning Beep*

The warning beep sound will be heard for about 3 seconds when there is any abnormality in tire inflation pressures (page 5-27).

▼Advanced Keyless Warning

Warning indicators for the advanced key, such as "the advanced key removed from vehicle warning", use a beep sound and warning/indicator lights in the instrument cluster.
Refer to Warning and Beep Sounds on page 3-16.

*Some models.

Lighting Control

▼Headlights

Type A (Without AUTO position)

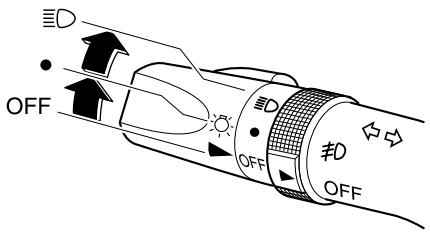

Turn the headlight switch to turn the headlights, other exterior lights and dashboard illumination on or off.

Switch Position	OFF	●	≣D
Headlights	Off	Off	On
Taillights Parking lights License lights Side-marker lights Dashboard illumination	Off	On	On

NOTE

- *If the light switch is left on, the lights will automatically switch off (if equipped) approximately 30 seconds after turning the ignition switch to the ACC or LOCK position.*
- *To prevent discharging the battery, don't leave the lights on while the engine is off unless safety requires them.*

Type B (With AUTO position)

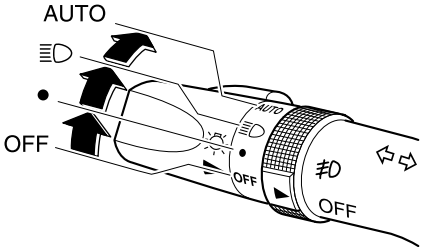

Turn the headlight switch to turn the headlights, other exterior lights and dashboard illumination on or off.

Switch Position	OFF	●	≣D	AUTO
Headlights	Off	Off	On	Auto
Taillights Parking lights License lights Side-marker lights Dashboard illumination	Off	On	On	

NOTE

- *If the light switch is left on, the lights will automatically switch off approximately 30 seconds after turning the ignition switch to the ACC or LOCK position.*
- *To prevent discharging the battery, don't leave the lights on while the engine is off unless safety requires them.*

AUTO (Auto-light control)
When the headlight switch is in the AUTO position and the ignition switch is in the ON position, the light sensor senses the surrounding lightness or darkness and automatically turns on or off the headlights, other exterior lights and dashboard illumination (see chart above).

CAUTION

- *Do not shade the light sensor by adhering a sticker or a label on the windshield. Otherwise the light sensor will not operate correctly.*

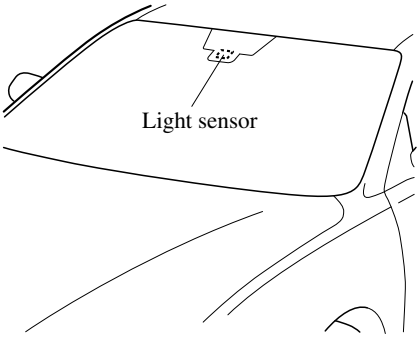

- *The light sensor also works as a rain sensor for the auto-wiper control. Keep hands and scrapers clear of the windshield when the ignition switch is in the ON position as fingers pinched or the wipers and wiper blades damaged when they activate automatically. If you are going to clean the windshield, be sure the wipers are turned off completely - this is particularly important when clearing ice and snow - when it is particularly tempting to leave the engine running.*

NOTE

- *The light may not turn off immediately even if the surrounding area becomes well-lit because the light sensor determines that it is nighttime if the surrounding area is continuously dark for several minutes such as inside long tunnels, traffic jams inside tunnels, or in indoor parking lots.*
  In this case, the light turns off if the light switch is turned to the OFF position.
- *When the headlight switch is in the AUTO position and the ignition switch is turned to the ACC or LOCK position, the headlights, other exterior lights and dashboard illumination will turn off.*
- *The timing for turning on the headlights, other exterior lights and dashboard illumination can be delayed by adjusting the sensitivity of the light sensor. Consult an Authorized Mazda Dealer regarding sensor adjustment.*

Xenon fusion headlight bulbs *

The low-beam bulbs of the headlights have xenon fusion bulbs that produce a bright white beam over a wide area.

WARNING

Do not replace the xenon fusion bulbs yourself:

Replacing the xenon fusion bulbs yourself is dangerous. Because the xenon fusion bulbs require high voltage, you could receive an electric shock if the bulbs are handled incorrectly. Consult an Authorized Mazda Dealer when the replacement is necessary.

NOTE

If the headlights flicker, or the brightness weakens, the bulb-life may be depleted and a replacement is necessary. Consult an Authorized Mazda Dealer.

*Some models.

▼Lights-On Reminder*

If lights are on and the key is removed from the ignition switch, a continuous beep sound will be heard when the driver's door is opened.

NOTE
When the advanced keyless function is used and the start knob is in the ACC position, the "Start Knob Not in LOCK Warning Beep" (page 3-16) overrides the lights-on reminder.

▼Headlight High-Low Beam

Push the lever forward for high beam. Pull back to original position for low beam.

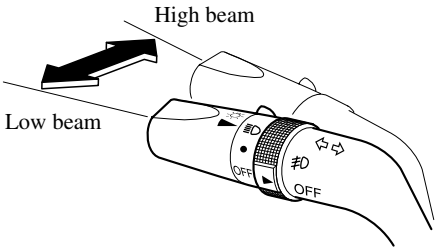

▼Flashing the Headlights

To flash the headlights, pull the lever fully toward you. The headlight switch does not need to be on, and the lever will return to the normal position when released.

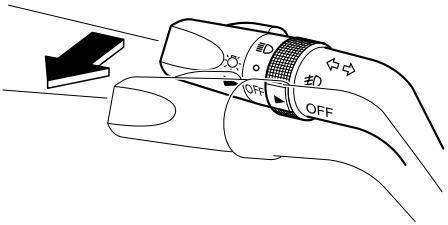

▼Headlight Leveling*

The number of passengers and weight of cargo in the luggage compartment change the angle of the headlights.
The headlight leveling switch adjusts this angle.

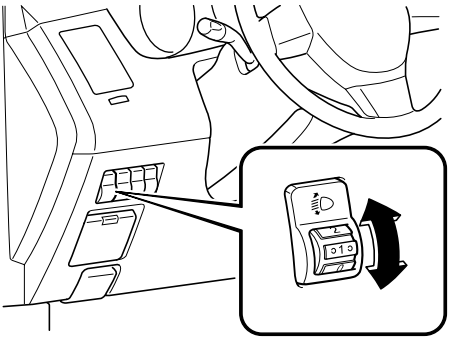

 *Some models.

Select the proper setting from the following chart.

Front seat		Rear seat	Load	Switch Position
Driver	Passenger			
×	—	—	—	0
×	×	—	—	0
×	×	×	—	1
×	×	×	×	2
×	—	—	×	3

×: Yes
—: No

▼Daytime Running Lights (Canada)

In Canada, vehicles must be driven with the headlights on during daytime operation.

For that reason, the daytime running lights automatically turn on when the ignition switch is turned to the ON position.

NOTE
The Daytime Running Lights turn off when the parking brake is applied.

Turn and Lane-Change Signals

▼Turn Signal

Move the signal lever down (for a left turn) or up (for a right turn) to the stop position. The signal will self-cancel after the turn is completed.

If the indicator light continues to flash after a turn, manually return the lever to its original position.

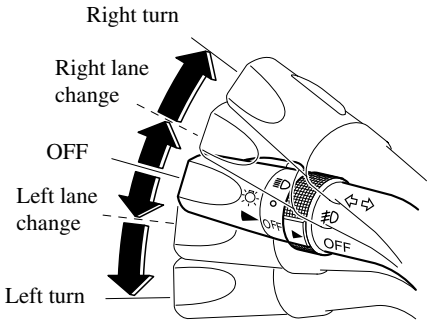

Green indicators on the dashboard show which signal is working.

Lane-change signals

Move the lever slightly toward the direction of the change —until the indicator flashes— and hold it there. It will return to the off position when released.

NOTE
If an indicator light stays on without flashing or if it flashes abnormally, one of the turn signal bulbs may be burned out.

Fog Lights *

Use this switch to turn on the fog lights. They help you to see as well as to be seen.

To turn the front fog lights on, rotate the fog light switch to the ≠D position.
The headlight switch must be in the ≡D position to turn on the front fog lights.

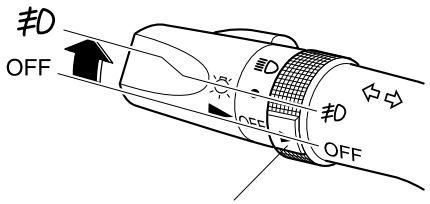

Fog light switch

To turn them off, rotate the fog light switch to the OFF position or turn the headlight switch to the ● or OFF position.

NOTE

- *The fog lights will turn off when the headlights are set at high beam.*
- ***(With auto-light control)***
  If the fog light switch is in the ON position and the headlight switch is in the AUTO position, the front fog lights will be turned on when the headlights, the exterior lights and dashboard illumination are automatically turned on.

Windshield Wipers and Washer

The ignition switch must be in the ON position.

⚠ WARNING

Use only windshield washer fluid or plain water in the reservoir:
Using radiator antifreeze as washer fluid is dangerous. If sprayed on the windshield, it will dirty the windshield, affect your visibility, and could result in an accident.

Do not use the washer without first warming the windshield and never use plain tap water:
Using windshield washer fluid without anti-freeze protection in freezing temperatures is dangerous. The washer fluid could freeze on the windshield and block your vision. You could have an accident.

NOTE

Because heavy ice and snow can jam the wiper blades, the wiper motor is protected from motor breakdown, overheating and possible fire by a circuit breaker. This mechanism will automatically stop operation of the blades, but only for about 5 minutes.
If this happens, turn off the wiper switch and park off the right-of-way, and remove the snow and ice.
After 5 minutes, turn on the switch and the blades should operate normally. If they don't resume functioning, consult an Authorized Mazda Dealer as soon as possible. Drive to the side of the road and park off the right-of-way. Wait until the weather clears before trying to drive with the wipers inoperative.

*Some models.

▼Windshield Wipers

Type A (With INT position)

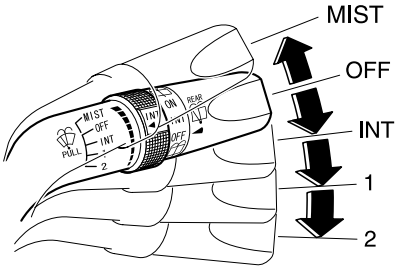

Turn the wipers on by pulling the lever down.
INT — Intermittent
1 — Low speed
2 — High speed

For a single wiping cycle, push the lever up to MIST.forward and release it.
MIST — Mist

Variable-speed intermittent wipers

Set the lever to INT and choose the interval timing by rotating the ring.

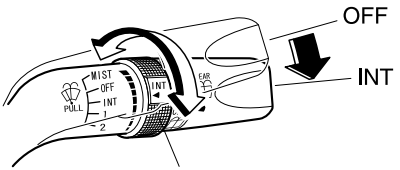

INT ring

Type B (With AUTO position)

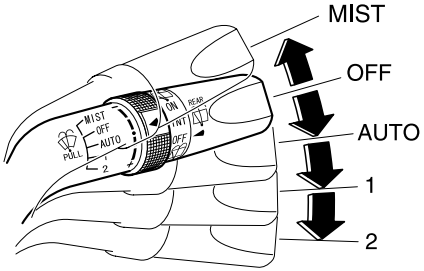

Turn the wipers on by pulling the lever down.
AUTO — Auto control
1 — Low speed
2 — High speed

For a single wiping cycle, push the lever up to MIST.forward and release it.
MIST — Mist

AUTO (Auto-wiper control)
When the wiper lever is in the AUTO position, the rain sensor senses the amount of rainfall on the windshield and turns the wiper on or off automatically (off—intermittent—low speed—high speed).

The sensitivity of the rain sensor can be adjusted by turning the switch on the wiper lever.
From the center position (normal), turn the switch towards (+) for higher sensitivity (faster response) or turn the switch towards (–) for less sensitivity (slower response).

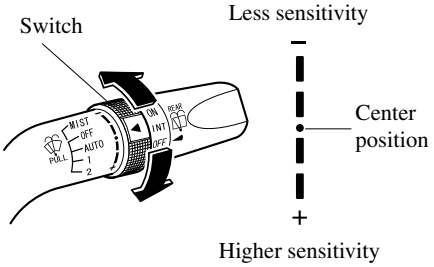

CAUTION

- *Do not shade the rain sensor by adhering a sticker or a label on the windshield. Otherwise the rain sensor will not operate correctly.*

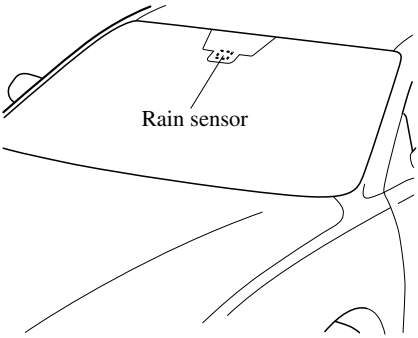

- *When the wiper lever is in the AUTO position and the ignition switch is in the ON position, the wipers may move automatically in the following cases:*
  - *If the windshield above the rain sensor is touched.*
  - *If the windshield above the rain sensor is wiped with a cloth.*
  - *If the windshield is struck with a hand or other object.*
  - *If the rain sensor is struck with a hand or other object from inside the vehicle.*

  Keep hands and scrapers clear of the windshield when the ignition switch is in the ON position as fingers pinched or the wipers and wiper blades damaged when they activate automatically. If you are going to clean the windshield, be sure the wipers are turned off completely - this is particularly important when clearing ice and snow - when it is particularly tempting to leave the engine running.

NOTE

- *Switching the auto-wiper lever from the OFF to the AUTO position while driving at a vehicle speed of 4 km/h (2 mph) or higher (or after driving the vehicle) activates the windshield wipers once, after which they operate according to the rainfall amount.*
- *The auto-wiper control may not operate when the rain sensor temperature is about –10 °C(14 °F) or lower, or about 85 °C (185 °F) or higher.*
- *If the windshield is coated with water repellent, the rain sensor may not be able to sense the amount of rainfall correctly and auto-wiper control may not operate properly.*
- *If dirt or foreign matter (e.g. ice or matter containing salt water) adheres to the windshield above the rain sensor or if the windshield is iced, it could cause the wipers to move automatically. However, if the wipers cannot remove this ice, dirt or foreign matter, the auto-wiper control will stop operation. In this case, pull the wiper lever to the 1 or 2 position for manual operation, or remove the ice, dirt or foreign matter by hand to restore the auto-wiper operation.*

▼Windshield Washer

Pull the lever toward you and hold it to spray washer fluid.

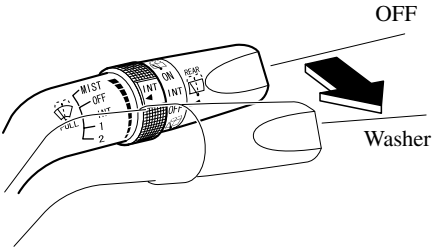

NOTE

With the wiper lever in the OFF or INT position, the wipers will operate continuously until the lever is released.

If the washer doesn't work, inspect the fluid level (page 8-26). If it's OK, consult an Authorized Mazda Dealer.

Rear Window Wiper and Washer

The ignition switch must be in the ON position.

▼Rear Window Wiper

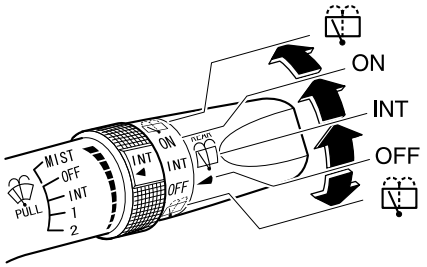

Turn the wiper on by turning the rear wiper/washer switch.
ON — Normal
INT — Intermittent

▼Rear Window Washer

To spray washer fluid, turn the rear wiper/washer switch to the position. After the switch is released, the washer will stop.
If the washer doesn't work, inspect the fluid level (page 8-26). If it's OK and the washer still doesn't work, consult an Authorized Mazda Dealer.

Rear Window Defroster

The rear window defroster clears frost, fog, and thin ice from the rear window.

The ignition switch must be in the ON position.

Press the switch to turn on the rear window defroster. The rear window defroster operates for about 15 minutes and turns off automatically.
The indicator light illuminates during operation.
The defroster operation can be confirmed by the indicator in the display.

To turn off the rear window defroster before the 15 minutes has elapsed, press the switch again.

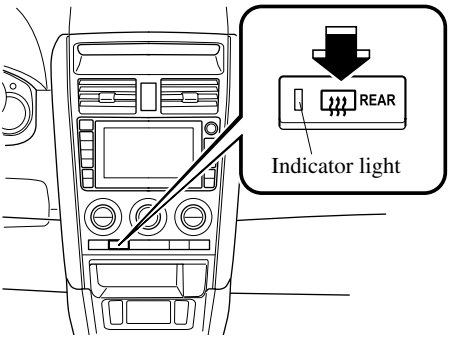

⚠ CAUTION

Don't use sharp instruments or window cleaners with abrasives to clean the inside of the rear window surface. They may damage the defroster grid inside the window.

NOTE
This defroster is not designed for melting snow. If there is an accumulation of snow on the rear window, remove it before using the defroster.

Horn

To sound the horn, press the mark on the steering wheel.

Hazard Warning Flasher

The hazard warning lights should always be used when you stop on or near a roadway in an emergency.

The hazard warning lights warn other drivers that your vehicle is a traffic hazard and that they must take extreme caution when near it.

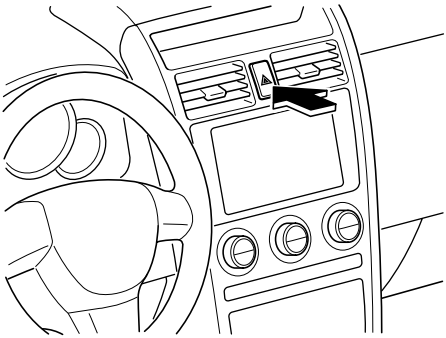

Depress the hazard warning flasher and all the turn signals will flash.

NOTE

- *The turn signals do not work when the hazard warning lights are on.*
- *Check local regulations about the use of hazard warning lights while the vehicle is being towed to verify that it is not in violation of the law.*

6 Interior Comfort

Use of various features for drive comfort, including air-conditioning and audio system.

Climate Control System 6-2
- Operating Tips 6-2
- Vent Operation (Front) 6-4
- Fully Automatic Type 6-6
- Vent Operation (Rear) 6-12
- Control Panel (Rear) 6-14

Audio System 6-17
- Antenna 6-17
- Operating Tips for Audio System 6-17
- Audio Set 6-27
- Audio Control Switch Operation (Steering Wheel) 6-46
- Auxiliary Input (AUX mode) 6-48
- Safety Certification 6-50

Rear Entertainment System 6-51
- Rear Entertainment System* 6-51
- Part Names 6-60
- Before Operation 6-63
- Sound Output 6-69
- Rear Entertainment System Functions 6-73
- DVD video, DVD audio, Video CD, Audio CD and MP3/WMA CD Playback (Disc Mode) 6-74
- Auxiliary Input (AUX mode) 6-88
- Language Code List 6-92
- Country Code List 6-94
- Error Message 6-98
- Symptoms and Actions 6-100

Bluetooth Hands-Free 6-103
- Bluetooth Hands-Free* 6-103
- Basic Bluetooth Hands-Free Operation 6-106
- Convenient Use of the Hands-Free System 6-109
- Hands-Free Telephone Setting 6-113
- When the Bluetooth Hands-Free cannot be used 6-118
- Safety Certification 6-119

Interior Equipment 6-120
- Sunvisors 6-120
- Interior Lights 6-121
- Information Display 6-123
- Cup Holder 6-125
- Bottle Holder 6-127
- Storage Compartments 6-127
- Accessory Sockets 6-131
- Power Outlet* 6-132

*Some models.

Operating Tips

▼Operating the Climate Control System

Operate the climate control system with the engine running.

NOTE
To prevent the battery from being discharged, do not leave the fan control dial on for a long period of time with the ignition switch in the ACC position when the engine is not running.

▼Clearing the Air Inlet

Clear all obstructions like leaves, snow and ice from the hood and the air inlet in the cowl grille to improve the system efficiency.

▼Foggy Windows

The windows may fog up easily in humid weather. Use the climate control system to defog the windows.

To help defog the windows, operate the air conditioner to dehumidify the air.

NOTE
The air conditioner may be used along with the heater to dehumidify the air.

▼Outside/Recirculated Air Position

Use the outside air position in normal conditions. The recirculated air position should be used only when driving on dusty roads or for quick cooling of the interior.

▼Parking in Direct Sunlight

If the vehicle has been parked in direct sunlight during hot weather, open the windows to let warm air escape, then run the climate control system.

▼Not Using for a Long Period

Run the air conditioner about 10 minutes at least once a month to keep internal parts lubricated.

▼Check the Refrigerant before the Weather Gets Hot

Have the air conditioner checked before the weather gets hot. Lack of refrigerant may make the air conditioner less efficient. Consult an Authorized Mazda Dealer for refrigerant inspection.

The air conditioner is filled with HFC134a (R134a), a refrigerant that will not damage the ozone layer.
If the air conditioner is low on refrigerant or has a malfunction, consult an Authorized Mazda Dealer.

▼Replacement of the Cabin Air Filter

If your vehicle is equipped with an air filter for the air conditioner, it is necessary to change the filter periodically as indicated in scheduled maintenance (page 8-3). Consult an Authorized Mazda Dealer for replacement of the cabin air filter.

▼Sunlight/Temperature Sensor

The fully automatic air conditioner function measures inside and outside temperatures, and the intensity of direct sunlight. It then sets temperatures inside the passenger compartment accordingly.

⚠ CAUTION

Do not obstruct either sensor, otherwise the automatic air conditioner will not operate properly.

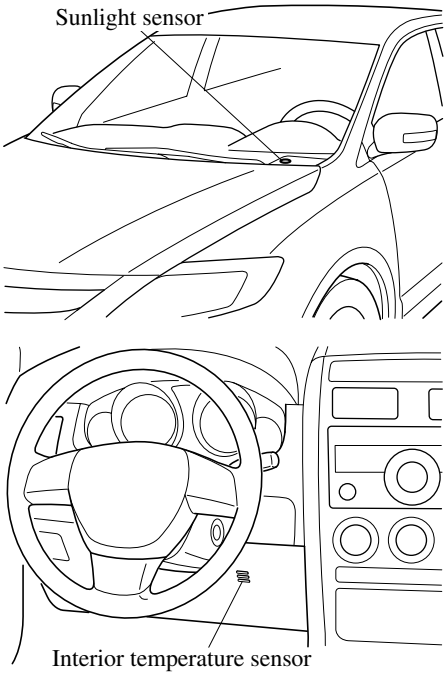

Vent Operation (Front)

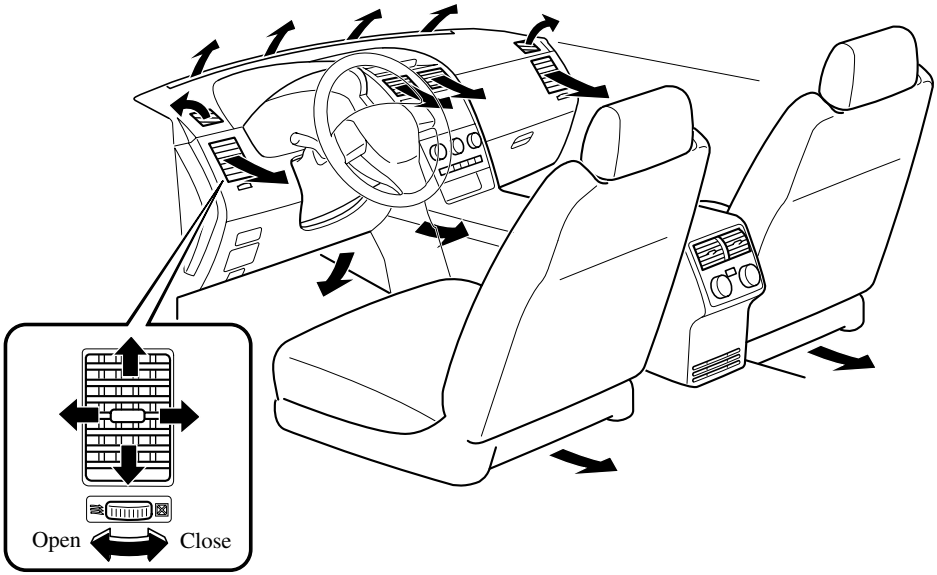

▼Adjusting the Vents

Directing airflow

You can direct air flow by moving the adjustment knob.

Opening/closing vents

The two outside vents can be opened and closed with wheel.

NOTE

When using the air conditioner, mist may come out from the vents. This is not a sign of trouble but a result of humid air being suddenly cooled.

▼Selecting the Airflow Mode

Dashboard Vents

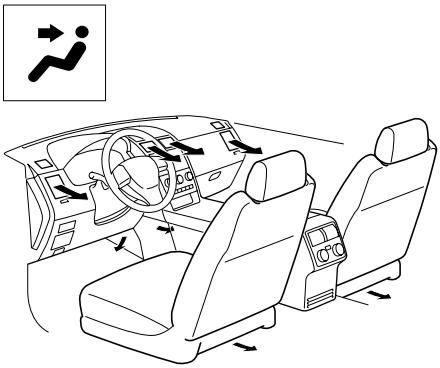

Defroster and Floor Vents

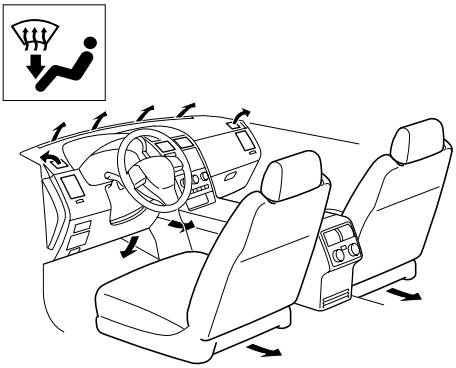

Dashboard and Floor Vents

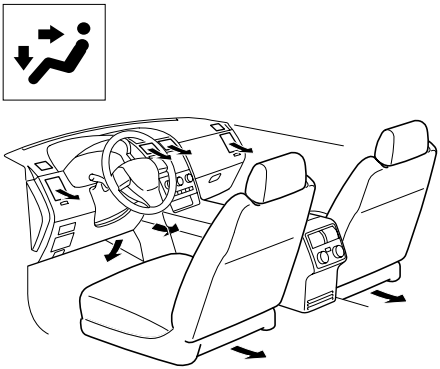

Defroster Vents

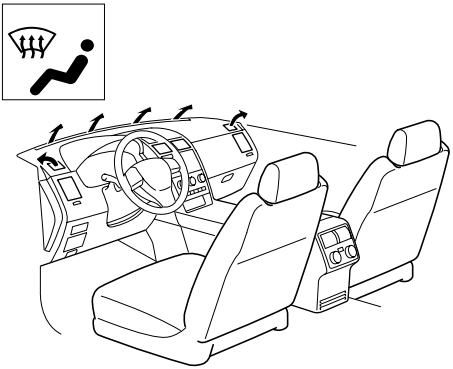

Floor Vents

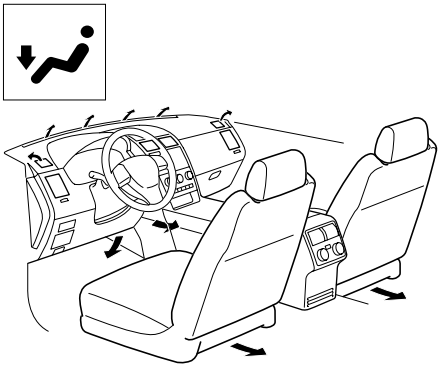

Fully Automatic Type

Climate control information is displayed on the information display.

Information display

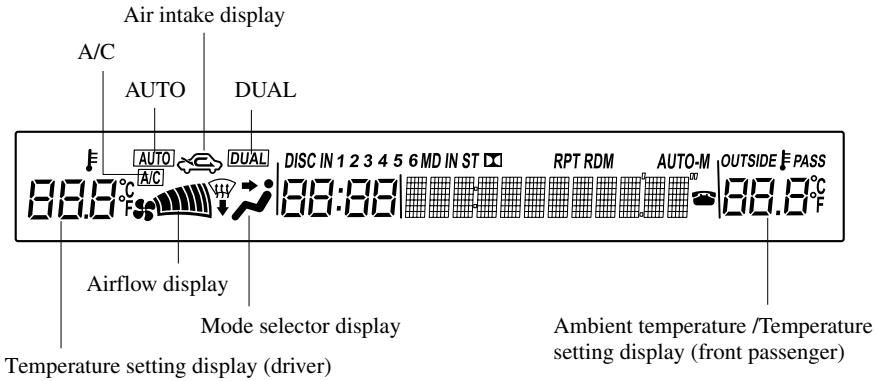

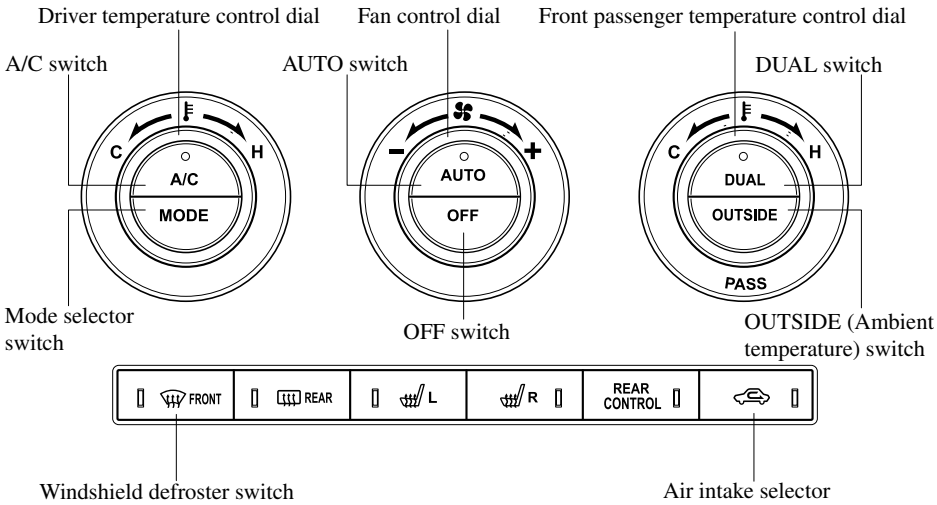

▼Control Switches

AUTO switch

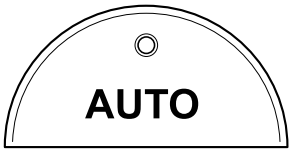

By pressing the AUTO switch the following functions will be automatically controlled in accordance with the set temperature:

- Airflow temperature
- Amount of airflow
- Selection of airflow mode
- Outside/Recirculated air selection
- Air conditioner operation

NOTE

AUTO switch indicator light

- *When on, it indicates AUTO operation, and the system will function automatically.*
- *When off, it indicates the operation of other switches such as the mode selector switch, fan control dial, A/C switch and windshield defroster switch. Other functions will continue to operate automatically.*

OFF switch

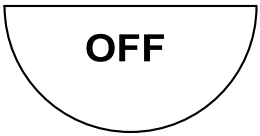

Pressing the OFF switch shuts off the climate control system.

Temperature control dial

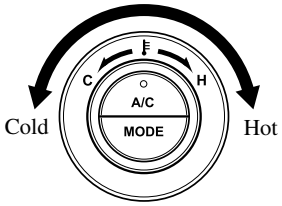

This dial controls temperature. Turn it clockwise for hot and counterclockwise for cold.

- When the DUAL switch is off:
  Turn the driver temperature control dial to control the temperature.
- When the DUAL switch is on:
  Turn the driver or front passenger temperature control dial to control the temperature.

NOTE

The system changes to the individual operation mode (DUAL switch indicator light illuminated) by turning the front passenger temperature control dial even when the DUAL switch is off, which allows individual control of the set temperature for the driver and front passenger.

Fan control dial

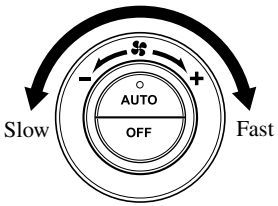

The fan has seven speeds. The selected speed will be displayed.

Mode selector switch

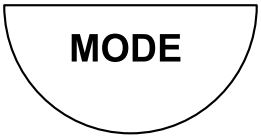

The desired airflow mode can be selected (page 6-5).

NOTE

- *With the airflow mode set to the position and the temperature control dial set at a medium temperature, heated air is directed to the feet and a comparably lower air temperature will flow through the central, left and right vents.*
- *To set the air vent to , press the windshield defroster switch.*

A/C switch

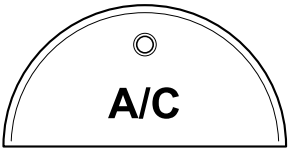

With the AUTO or fan control dial ON, press the A/C switch to turn the air conditioning (cooling/dehumidifying functions) on or off.

NOTE

The air conditioner may not function when the outside temperature approaches 0 °C (32 °F). (Indicator light remains on even when system is off.)

Air intake selector

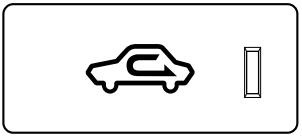

Outside or recirculated air positions can be selected. Press the switch to select outside/recirculated air positions.

Recirculated air position (indicator light illuminated)

Use this position when going through tunnels, driving in congested traffic (high engine exhaust areas) or when quick cooling is desired.

Outside air position (indicator light turned off)

Use this position for normal conditions and defogging.

WARNING

Do not use the position in cold or rainy weather:

Using the position in cold or rainy weather is dangerous as it will cause the windows to fog up. Your vision will be hampered, which could lead to a serious accident.

OUTSIDE (Ambient Temperature) switch

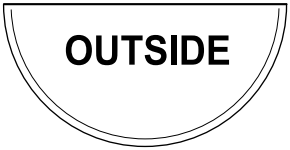

Press the OUTSIDE switch to display the ambient temperature.

NOTE

- *The displayed ambient temperature may vary from the actual ambient temperature depending on the surrounding area and vehicle conditions.*
- *Press the OUTSIDE switch 3 seconds or more to switch the display from Fahrenheit to Centigrade or vice versa.*
- *Press the OUTSIDE switch again to switch the display from ambient temperature to the temperature set for the air conditioner.*

DUAL switch

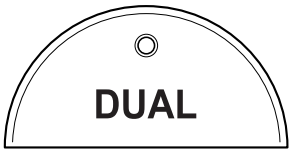

Use the DUAL switch to change the mode between the individual operation and interconnection modes.

Individual operation mode (indicator light illuminated)

The set temperature can be controlled individually for the driver and front passenger.

Interconnection mode (indicator light turned off)

The set temperature for the driver and front passenger is controlled simultaneously.

NOTE

- *The set temperature for the front passenger changes to that of the driver while in the interconnected mode.*
- *DUAL is displayed on the information display while in the individual operation mode.*
- *The system changes to the interconnection mode automatically if the windshield defroster switch is pressed. The system will not change to the individual operation mode by pressing the DUAL switch or turning the front passenger temperature control dial.*

Windshield defroster switch

Press the switch to defrost the windshield and front door windows.

▼Operation of Automatic Air Conditioning

1. Press the AUTO switch. Selection of the airflow mode, air intake selector and amount of airflow will be automatically controlled.

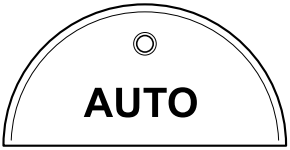

2. Use the temperature control dial to select a desired temperature.
   Press the DUAL switch or turn the front passenger temperature control dial to control the set temperature individually for the driver and front passenger.

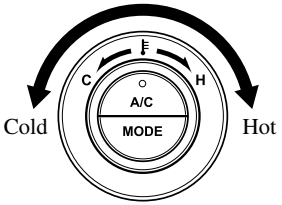

To turn off the system, press the OFF switch.

NOTE

- *Setting the temperature to the maximum high or low will not provide the desired temperature at a faster rate.*
- *When selecting heat, the system will restrict airflow until it has warmed to prevent cold air from blowing out of the vents.*

▼Windshield Defrosting and Defogging

Press the windshield defroster switch. In this position, the position is automatically selected, and the air conditioner automatically turns on. The air conditioner will directly dehumidify the air to the front windshield and side windows (page 6-5). Airflow amount will be increased.

⚠ WARNING

Set the temperature control to the hot or warm position when defogging (position):

Using the position with the temperature control set to the cold position is dangerous as it will cause the outside of the windshield to fog up. Your vision will be hampered, which could lead to a serious accident.

NOTE

- *Press the windshield defroster switch to change the mode to the interconnection mode automatically. The system does not change to the individual operation mode by pressing the DUAL switch or turning the front passenger temperature control dial.*
- *Use the temperature control dial to increase the air flow temperature and defog the windshield more quickly.*

Vent Operation (Rear)

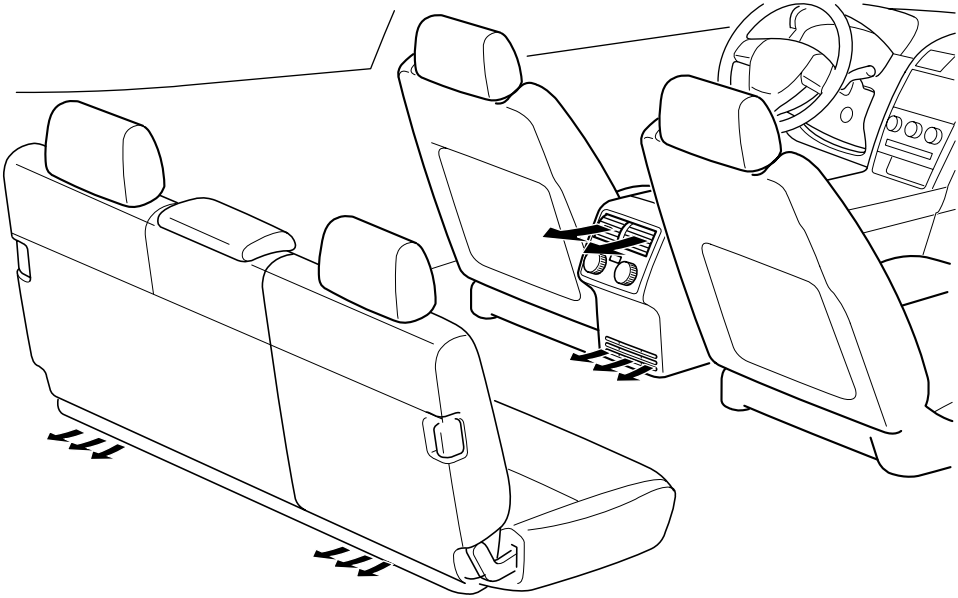

▼Adjusting the Vents

Directing airflow

You can direct air flow by moving the adjustment knob.

NOTE

When using the air conditioner, mist may come out from the vents. This is not a sign of trouble but a result of humid air being suddenly cooled.

▼Selecting the Airflow Mode

For vehicles with rear full-auto air conditioning, the airflow mode can be selected according to the purpose of use.

Instrument panel Vents

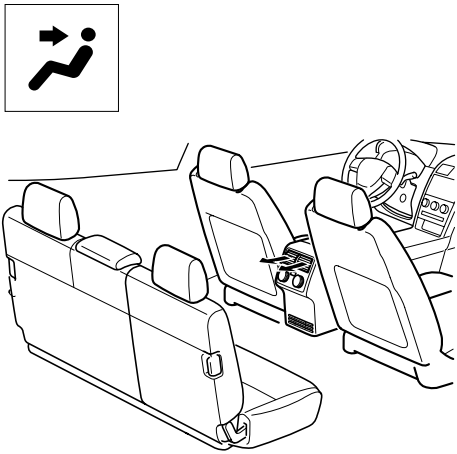

Floor Vents

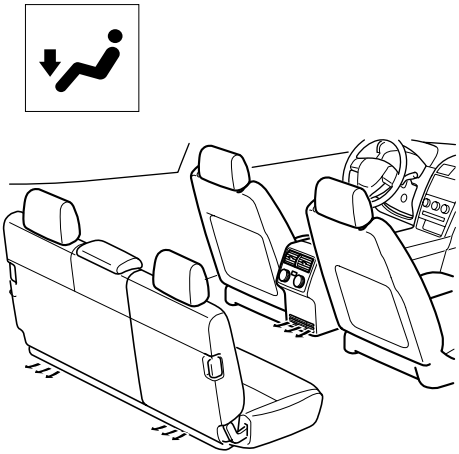

Instrument panel and Floor Vents

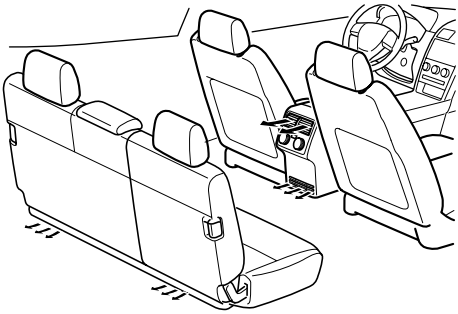

Control Panel (Rear)

Front

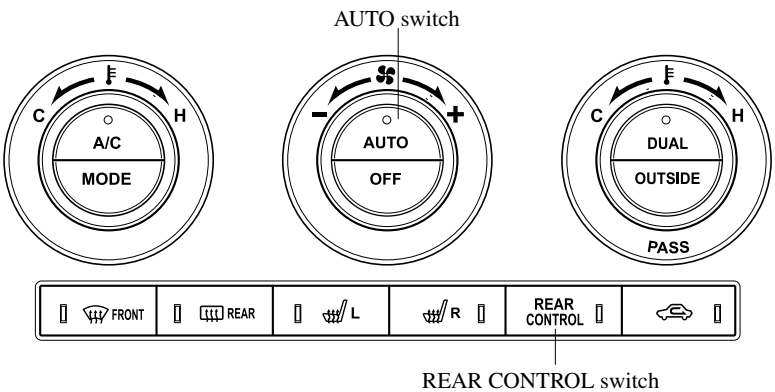

Rear

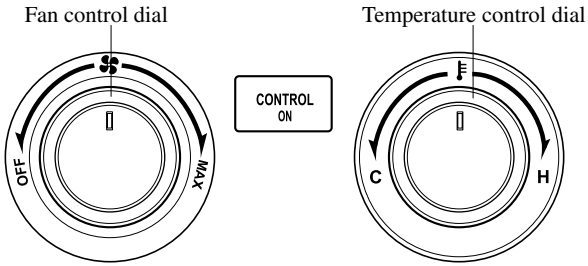

▼Control Switches

Rear air conditioning on switch

Press the REAR CONTROL switch to operate the rear air conditioning from the rear seats.
Fan and temperature adjustment from the rear control panel is possible only when "CONTROL ON" in the rear control panel is illuminated.

NOTE

- *When the rear control switch is off, operation of the rear airflow amount and vent temperature from the rear seats is not possible.*
- *When the rear control switch is off, the airflow amount and the vent temperature for the rear are changed by operating the temperature control dial of the front control panel.*
  Airflow amount automatically changes according to the fan control dial of the front control panel.
- *When the rear control switch is off, the mode for the rear is changed according to the mode selector switch and the temperature control dial of the front control panel.*

Temperature control dial

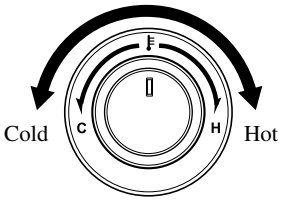

This dial controls temperature. Turn it clockwise for hot and counterclockwise for cold.

Fan control dial

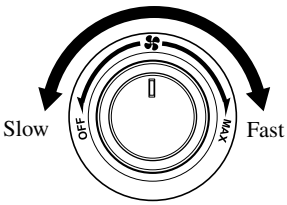

The fan has 15 speeds.

▼Operation of Automatic Air Conditioning

Operation from front seats

1. Turn the front air conditioning on.
2. Turn the REAR CONTROL switch off. (indicator light turned off.)

NOTE

- *Setting the temperature to the maximum high or low will not provide the desired temperature at a faster rate.*
- *When selecting heat, the system will restrict airflow until it has warmed to prevent cold air from blowing out of the vents.*
- *While in individual operation mode, the temperature setting is controlled at the driver's temperature.*
- *When operating the air conditioning from the front seats (REAR CONTROL switch is off), operation from the rear seats is not possible.*
- *Airflow amount and the mode for the rear cannot be changed by operating the mode selector switch of the front control panel. Airflow amount and the mode are automatically changed according to the temperature control dial.*
  Airflow amount automatically changes according to the fan control dial of the front control panel.

Operation from rear seats

1. Turn the front air conditioning on.
2. Turn the REAR CONTROL switch on in the front control panel. (indicator light illuminated.)

NOTE

"CONTROL ON" illuminates in the REAR CONTROL panel.

3. Set the temperature control dial to the desired position.

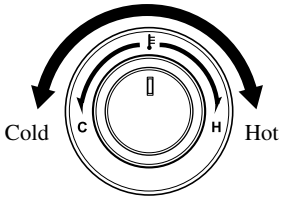

NOTE

The airflow mode may change depending on the set temperature.

4. Set the fan control dial to the desired position.

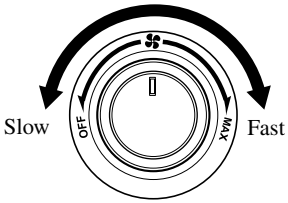

Antenna

▼Rear Window Antenna

The rear window antenna receives both AM and FM signals.

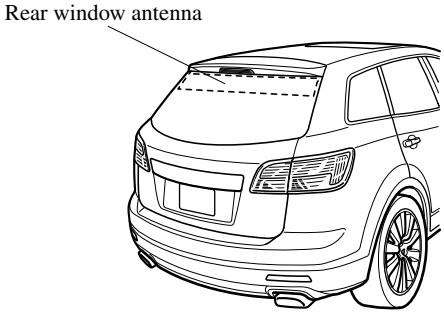

⚠ CAUTION

When washing the inside rear window, use a soft cloth dampened in lukewarm water, gently wiping the antenna lines.
Use of glass cleaning products could damage the antenna.

Operating Tips for Audio System

⚠ WARNING

Do not adjust the audio control switches while driving the vehicle:
Adjusting the audio while driving the vehicle is dangerous as it could distract your attention from the vehicle operation which could lead to a serious accident. Always adjust the audio while the vehicle is stopped. Even if the audio control switches are equipped on the steering wheel, learn to use the switches without looking down at them so that you can keep your maximum attention on the road while driving the vehicle.

⚠ CAUTION

- *For the purposes of safe driving, adjust the audio volume to a level that allows you to hear sounds outside of the vehicle.*
- *Do not install non-genuine speakers since their vibration may affect the DSC/RSC sensors.*

NOTE

- *Do not use the audio for long periods of time while the engine is off. Otherwise the battery could go dead.*
- *If a cellular phone or CB radio is used in or near the vehicle, it could cause noise to occur from the audio system, however, this does not indicate that the system has been damaged.*

▼Radio Reception

AM characteristics

AM signals bend around such things as buildings or mountains and bounce off the ionosphere. Therefore, they can reach longer distances than FM signals. Because of this, two stations may sometimes be picked up on the same frequency at the same time.

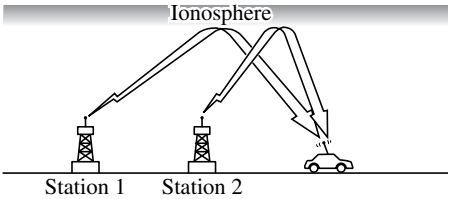

FM characteristics

An FM broadcast range is usually about 40—50 km (25—30 miles) from the source. Because of extra coding needed to break the sound into two channels, stereo FM has even less range than monaural (non-stereo) FM.

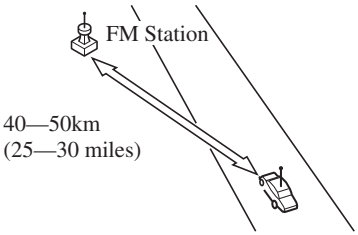

Signals from an FM transmitter are similar to beams of light because they do not bend around corners, but they do reflect. Unlike AM signals, FM signals cannot travel beyond the horizon. Therefore, FM stations cannot be received at the great distances possible with AM reception.

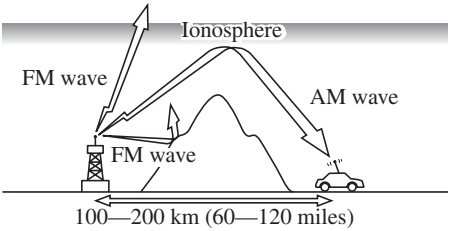

Atmospheric conditions can also affect FM reception. High humidity will cause poor reception. However, cloudy days may provide better reception than clear days.

Multipath noise

Since FM signals can be reflected by obstructions, it is possible to receive both the direct signal and the reflected signal at the same time. This causes a slight delay in reception and may be heard as a broken sound or a distortion. This problem may also be encountered when in close proximity to the transmitter.

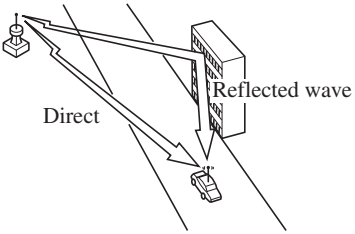

Flutter/Skip noise

Signals from an FM transmitter move in straight lines and become weak in valleys between tall buildings, mountains, and other obstacles. When a vehicle passes through such an area, the reception conditions may change suddenly, resulting in annoying noise.

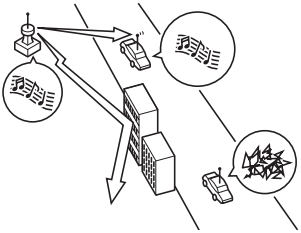

Weak signal noise

In suburban areas, broadcast signals become weak because of distance from the transmitter. Reception in such fringe areas is characterized by sound breakup.

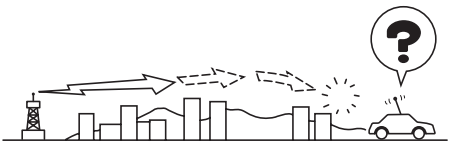

Strong signal noise

This occurs very close to a transmitter tower. The broadcast signals are extremely strong, so the result is noise and sound breakup at the radio receiver.

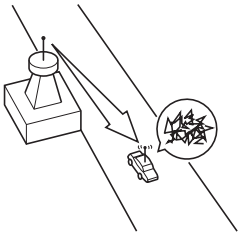

Station drift noise

When a vehicle reaches the area of two strong stations broadcasting at similar frequencies, the original station may be temporarily lost and the second station picked up. At this time there will be some noise from this disturbance.

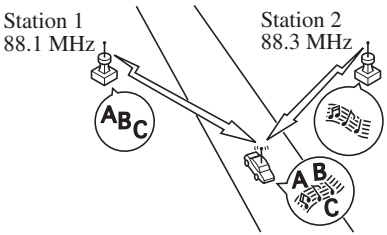

▼Operating Tips for CD Player/In-Dash CD Changer

Condensation phenomenon

Immediately after turning on the heater when the vehicle is cold, the CD or optical components (prism and lens) in the CD player/In-dash CD changer may become clouded with condensation. At this time, the CD will eject immediately when placed in the unit. A clouded CD can be corrected simply by wiping it with a soft cloth. Clouded optical components will clear naturally in about an hour. Wait for normal operation to return before attempting to use the unit.

Handling the CD player/In-dash CD changer

The following precautions should be observed.

- Do not spill any liquid on the audio system.

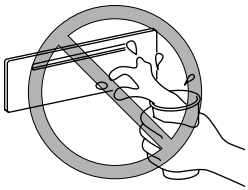

- Do not insert any objects, other than CDs, into the slot.

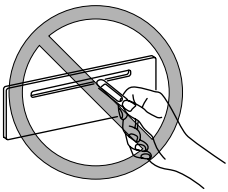

- The CD revolves at high speed within the unit. Defective (cracked or badly bent) CDs should never be used.

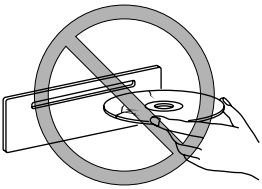

- Do not use non-conventional discs such as heart-shaped, octagonal discs, etc. The disc may not eject resulting in a malfunction.

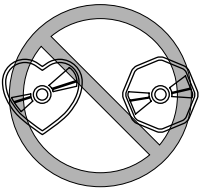

- If the memory portion of the CD is transparent or translucent, do not use the disc.

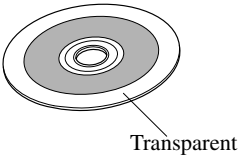

- A new CD may have rough edges on its inner and outer perimeters. If a disc with rough edges is used, proper setting will not be possible and the CD player/In-dash CD changer will not play the CD. In addition, the disc may not eject resulting in a malfunction. Remove the rough edges in advance by using a ball-point pen or pencil as shown below. To remove the rough edges, rub the side of the pen or pencil against the inner and outer perimeter of the CD.

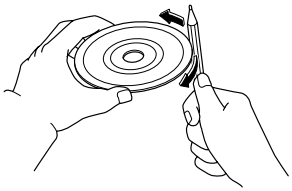

- When driving over uneven surfaces, the sound may jump.

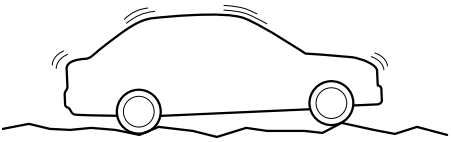

- The CD player/In-dash CD changer has been designed to play CDs bearing the identification logo as shown. No other discs can be played.
- Use discs that have been legitimately produced. If illegally-copied discs such as pirated discs are used, the system may not operate properly.

CD Player

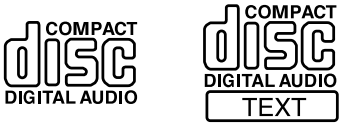

In-dash CD changer

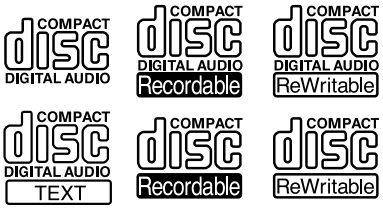

- Be sure never to touch the signal surface when handling the CDs. Pick up a CD by grasping the outer edge or the edge of the hole and the outer edge.

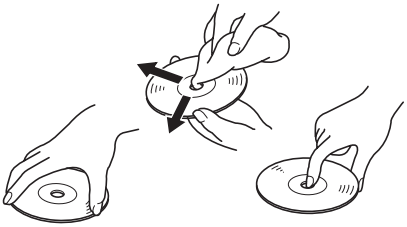

- Do not stick paper or tape on the CD. Avoid scratching the reverse side (the side without a label). The disc may not eject resulting in a malfunction.
- Dust, finger smudges, and dirt can decrease the amount of light reflected from the signal surface, thus affecting sound quality. If the CD should become soiled, gently wipe it with a soft cloth from the center of the CD to the edge.

- Do not use record sprays, antistatic agents, or household spray cleaners. Volatile chemicals such as benzine and thinner can also damage the surface of the CD and must not be used. Anything that can damage, warp, or fog plastic should never be used to clean CDs.
- Insert discs one by one. If two discs are inserted at the same time, the system may not operate properly.
- CD TEXT textual information cannot be displayed by audio units other than the In-dash CD changer (MP3 compatible type only). (Only playback is possible.)
- The following player can play MP3 files recorded in CD-ROM, CD-R, and CD-RW.
  · In-dash CD changer (MP3 compatible type only)
- The CD player/In-dash CD changer ejects the CD if the CD is inserted upside down. Also dirty and/or defective CDs may be ejected.
- An 8 cm (3 in) CD can be played in the CD player.
  The In-dash CD changer is specially made for 12 cm (5 in) CDs.
  An 8 cm (3 in) CD can be played in the In-dash CD changer (MP3 compatible type only) if an 8 cm (3 in) CD adapter is used.
  If an 8 cm (3 in) CD adapter is not used, the In-dash CD changer (MP3 compatible type only) may be damaged. Always use a CD adapter.
  An 8 cm (3 in) CD cannot be played in the In-dash CD changer (MP3 non-compatible type only) even if an 8 cm (3 in) CD adapter is used.
- Do not insert cleaning discs in the CD player/In-dash CD changer.
- Do not insert any disc with a peel-off seal affixed to it.

Handling the In-dash CD changer

- This unit may not be able to play certain CD-R/CD-RWs made using a computer or music CD recorder due to disc characteristics, scratches, smudges, dirt, etc., or due to dust or condensation on the lens inside the unit.
- Storing CDs in the vehicle exposed to direct sunlight or high temperature may damage the CD-R/CD-RWs, and make them unplayable.
- CD-R/CD-RW exceeding 700 MB cannot be played.
- This unit may not be able to play certain discs made using a computer due to the application (writing software) setting used. (For details, consult the store where the application was purchased.)
- It is possible that certain text data, such as titles, recorded on a CD-R/CD-RW may not be displayed when musical data (CD-DA) is playing.
- The period from when a CD-RW is inserted to when it begins playing is longer than a normal CD or CD-R.
- Completely read the instruction manual and cautions for CD-R/CD-RWs.
- Do not use discs with cellophane tape adhering, partially peeled off labels, or adhesive material exuding from the edges of the CD label. Also, do not use discs with a commercially-available CD-R label affixed. The disc may not eject resulting in a malfunction.

▼Operating tips for MP3

NOTE

Supply of this product only conveys a license for private, non-commercial use and does not convey a license nor imply any right to use this product in any commercial (i.e. revenue-generating) real time broadcasting (terrestrial, satellite, cable and/or any other media), broadcasting/streaming via the Internet, intranets and/or other networks or in other electronic content distribution systems, such as pay-audio or audio-on-demand applications. An independent license for such use is required. For details, please visit http://www.mp3licensing.com.

- This audio system handles MP3 files that have been recorded on CD-R/CD-RW/CD-ROMs. Discs that have been recorded using the following formats can be played:
  - ISO 9660 level 1
  - ISO 9660 level 2
  - Joliet extended format
  - Romeo extended format
- This unit handles MP3 files conforming to the MP3 format containing both header frames and data frames.
- This unit can play multi-session recorded discs that have up to 40 sessions.
- This unit can play MP3s with sampling frequencies of 16/22.05/24/32/44.1/48 kHz.
- This unit can play MP3 files that have been recorded in bit rates of 8 kbps to 320 kbps. Nonetheless, to insure enjoyment of music with consistent sound quality, it is recommended to use discs that have been recorded at a bit rate of 128 kbps or more.
- If a disc has both music data (CD-DA) and MP3 files, playback of the two file types differs depending on how the disc was recorded.
- Packet written discs cannot be played on this unit.
- This unit does not play CDs recorded using MP3i (MP3 interactive), MP3 PRO and RIFF MP3 formats.

About folders and files

- The order of hierarchy for MP3 files and folders during playback or other functions is from shallow to deep. The arrangement and playing order of a recorded disc containing MP3 files is as follows:
  - File number
    A numerical file number is assigned to each file in a folder in the order of hierarchy from shallow to deep.
  - Folder number
    A numerical folder number is assigned to each folder in the order of hierarchy from shallow to deep.

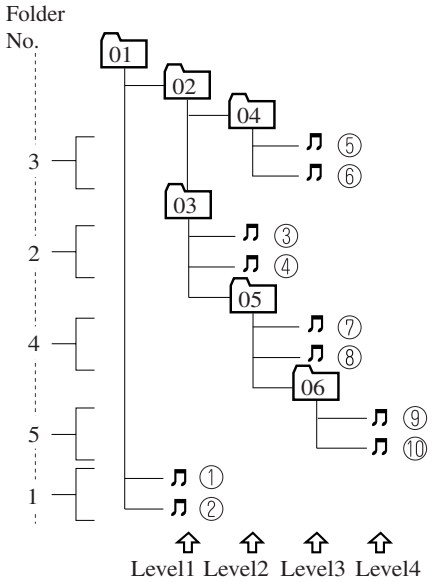

- The folder order is automatically assigned and this order cannot be optionally set.
- Any folder without an MP3 file will be ignored. (It will be skipped and the folder number will not be displayed.)
- MP3 files not conforming to the MP3 format containing both header frames and data frames will be skipped and not played.
- This unit will play MP3 files that have up to eight levels. However, the more levels a disc has, the longer it will take to initially start playing. It is recommended to record discs with two levels or less.
- A single disc with up to 512 files can be played and a single folder with up to 255 files can be played.
- When naming an MP3 file, be sure to add an MP3 file extension (.mp3) after the file name.
- The maximum number of characters that can be used for file names is as follows. However, this unit will only display up to 30 characters, including the file extension (.mp3).

	Maximum number of characters in a file name (including a separator "." and the three letters of the file extension)
ISO9660 level 1	12*
ISO9660 level 2	31*
Joliet extended format	64
Romeo extended format	128

* English one-byte characters (capitalized only) and underbar "_" are available.

⚠ CAUTION

This unit can only play MP3 files that have an MP3 file extension (.mp3) attached. Do not attach an MP3 file extension to any other type file as it could cause noise to be emitted or a malfunction in the unit.

About ID3 Tag display

- This unit can only display ID3 Tag album, track and artist names that have been input using Ver.1.0/1.1/2.2/2.3 formats. Any other data that may have been input cannot be displayed.
- This unit can only display English (including numerals) one-byte characters. Use only English (including numerals) one-byte characters when inputting ID3 tags. Two-byte characters and some special symbols cannot be displayed.

Specialized glossary

MP3

Abbreviation for “MPEG Audio Layer 3”. A technical standard for audio compression as decided by an ISO (International Organization for Standardization) MPEG working group. Use of MP3 allows for audio data to be compressed to approximately a tenth of the source data size.

ISO 9660

An international standard for logical formatting of CD-ROM files and folders. It is divided into three separate levels based on differences in file naming procedures, data configuration and other characteristics.

Multi-session

A session is the complete amount of data recorded from the beginning to the end of a single period of CD-ROM, CD-R/CD-RW data recording. Multi-session refers to the existence of data from two or more sessions on a single disc.

Sampling

Refers to the process of encoding analog audio data at regular intervals and converting it to digital data. The sampling rate refers to the number of times a sample is taken in one second and is expressed in Hz units. Increasing the sampling rate improves the sound quality but also increases the data size.

Bit rate

Refers to the volume of data per second, expressed in bps (bits per second). Generally, the larger the number of the transfer bit rate when compressing an MP3 file, the more information regarding musical reproduction it carries, and therefore the better the sound quality.

Packet writing

A general term for the method, similar to that used for floppy discs or hard drives, of recording the required file in a single increment on a CD-R and similar.

ID3 Tag

ID3 tag is a method for storing information related to the music in an MP3 file. Information such as track, artist and album name can be stored. This content can be freely edited using ID3 editing function software.

VBR

Abbreviation for Variable Bit Rate. While CBR (Constant Bit Rate) is generally used, VBR varies the bit rate for audio compression according to compression conditions and this allows for compression with preference given to sound quality.

MEMO

Audio Set

- Audio information is displayed on the information display.
- There are two types of In-dash CD changers. Check which In-dash CD changer your vehicle is equipped with.

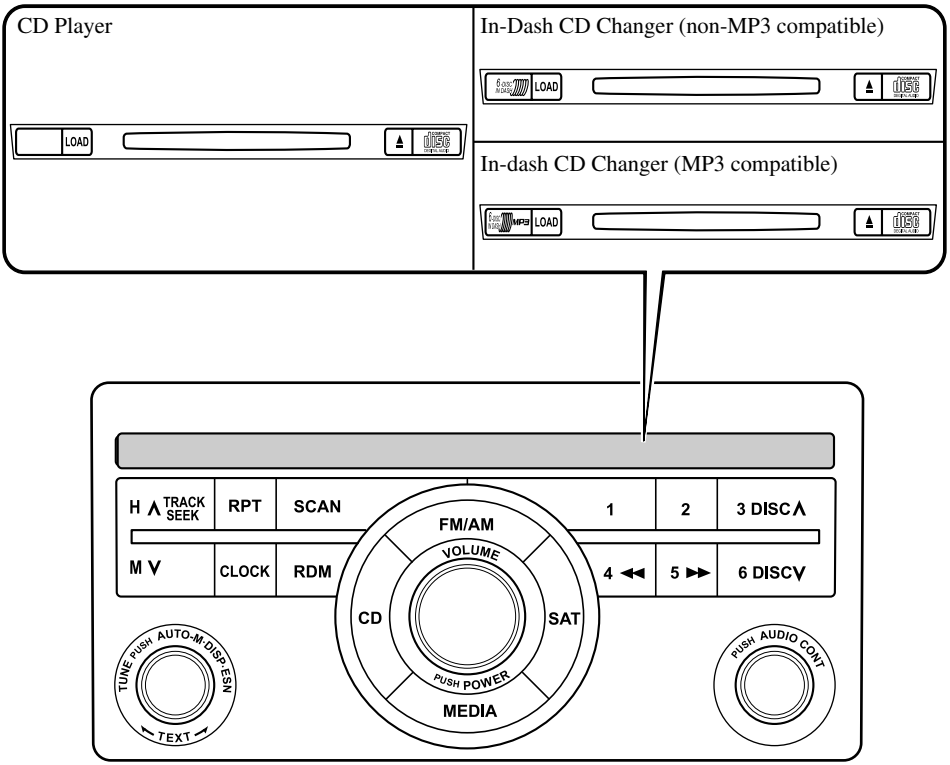

Power/Volume/Sound Controls ..... page 6-28
Operating the Radio ..... page 6-34
Operating the Compact Disc (CD) Player ..... page 6-38
Operating the In-Dash CD Changer ..... page 6-40
Operating the Auxiliary jack ..... page 6-44
Error Indications ..... page 6-45

▼Power/Volume/Sound Controls

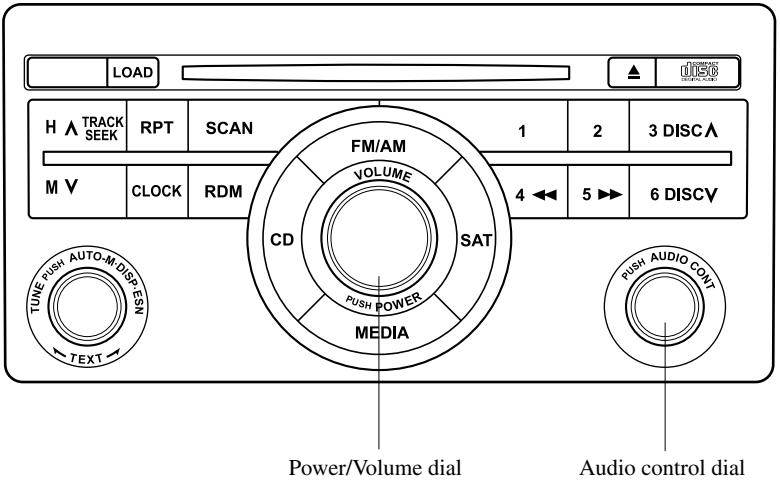

Power ON/OFF

Turn the ignition switch to the ACC or ON position.

Press the power/volume dial to turn the audio system on.
Press the power/volume dial again to turn the audio system off.

NOTE
To prevent the battery from being discharged, do not leave the audio system on for a long period of time when the engine is not running.

Volume adjustment

To adjust the volume, turn the power/volume dial.

Turn the power/volume dial to the right to increase volume, to the left to decrease it.

Audio sound adjustment

1. Press the audio control dial to select the function. The selected function will be indicated.

Standard audio-equipped model

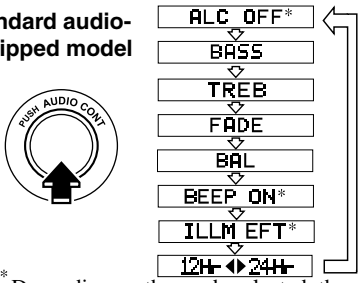

* Depending on the mode selected, the indication changes.

Bose® Sound System-equipped model

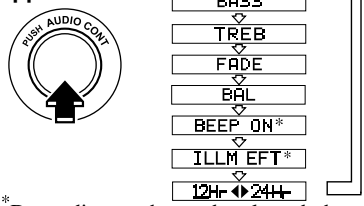

*Depending on the mode selected, the indication changes.

2. Turn the audio control dial to adjust the selected functions as follows:

Standard audio-equipped model

Indication	Turn Left	Turn Right
ALC	Select mode	
BASS	Decrease bass	Increase bass
TREB	Decrease treble	Increase treble
FADE	Shift the sound to the front	Shift the sound to the rear
BAL	Shift the sound to the left	Shift the sound to the right
BEEP	OFF	ON
ILLM EFT	OFF	ON
12Hr ◀▶24Hr	12Hr (Flashing)	24Hr (Flashing)

Bose® Sound System-equipped model (Stereo mode)

Indication	Turn Left	Turn Right
AudioPLT	OFF	ON
CENTERPT	OFF	ON
BASS	Decrease bass	Increase bass
TREB	Decrease treble	Increase treble
FADE	Shift the sound to the front	Shift the sound to the rear
BAL	Shift the sound to the left	Shift the sound to the right
BEEP	OFF	ON
ILLM EFT	OFF	ON
12Hr ◀▶24Hr	12Hr (Flashing)	24Hr (Flashing)

(5.1-channel sound mode)

Indication	Turn Left	Turn Right
AudioPLT	OFF	ON
Surround	ALL	Rr
Surround	Select mode	
BASS	Decrease bass	Increase bass
TREB	Decrease treble	Increase treble
FADE	Shift the sound to the front	Shift the sound to the rear
BAL	Shift the sound to the left	Shift the sound to the right
BEEP	OFF	ON
ILLM EFT	OFF	ON
12Hr ◀▶24Hr	12Hr (Flashing)	24Hr (Flashing)

The display switches to the 5.1-channel sound mode when the following conditions are met:

- The vehicle is Rear Entertainment System equipped.
- The mode is switched to “RSES” (page 6-47).
- A CD or a DVD is inserted in the Rear Entertainment System or the sound of the disc is 5.1 Dolby Digital/DTS audio.

NOTE

About 5 seconds after selecting any mode, the volume function will be automatically selected. To reset bass, treble, fade, and balance, press the audio control dial for 2 seconds. The unit will beep and “CLEAR” will be displayed.

Automatic Level Control (ALC)

(Standard audio-equipped model)

The automatic level control is a feature that automatically adjusts audio volume and sound quality according to the vehicle speed.
The volume increases in accordance with the increase in vehicle speed, and decreases as vehicle speed decreases.

The following four modes are available. Select the desired mode.

Mode	Volume change
ALC OFF	No change
ALC LEVEL1	Minimum
ALC LEVEL2	Medium
ALC LEVEL3	Maximum

Turn the audio control dial to select ALC OFF or ALC LEVEL1—3 modes. The selected mode will be indicated.

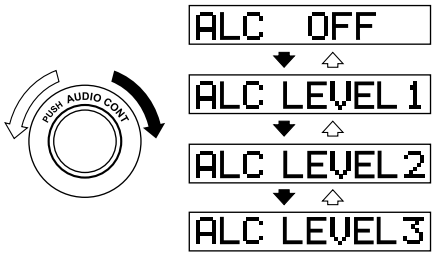

***AudioPilot® (Bose® Sound System-equipped model)**

AudioPilot automatically adjusts audio volume and sound quality in accordance with the level of noise entering the vehicle interior while driving. When AudioPilot is turned ON, the system automatically calculates the conditions for optimum hearing of sound which may be difficult to hear depending on exterior noise.

* AudioPilot® is a registered trademark of Bose Corporation.

***Centerpoint® (Bose® Sound System-equipped model)**

Centerpoint offers you the experience of 5.1-channel surround sound in your vehicle even with your conventional 2-channel stereo DVDs inserted in the Rear Entertainment System main unit or 2-channel stereo CDs.
The true surround sound effect of Centerpoint can be adjusted to any one of five level between minimum and maximum enhancement.

Indication	Enhance level
CENTERPT MIN	Minimum
CENTERPT LOW	Low
CENTERPT MID	Medium
CENTERPT HI	High
CENTERPT MAX	Maximum

1. Turn the audio control dial and select CENTERPT ON.
2. Press the audio control dial and select the surround effect mode.
3. Turn the audio control dial to select CENTERPT MIN—MAX mode. The selected mode will be indicated.

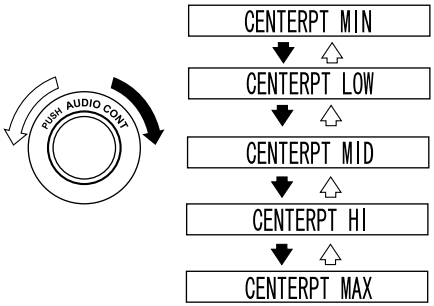

NOTE

- *Centerpoint® operates optimally with a 2-channel stereo CD. MP3 audio files can be played, however, MP3 audio files encoded with high compression may result in poor sound quality.*
- *Centerpoint® is available for 2-channel stereo audio except for AM/FM/SIRIUS/AUX.*

* Centerpoint® is a registered trademark of Bose Corporation.

Rear seat-optimized

The rear seat-optimized function allows passengers to optimize the audio output to the rear for a more pleasurable acoustic field when selecting the 5.1-channel sound mode.
Select Surround Rr to increase the surround effect to the rear seat. Select Surround ALL to apply the surround effect to all seats.

NOTE

Rear seat-optimized is only effective if a CD or a DVD inserted in the Rear Entertainment System main unit is 5.1 Dolby Digital/DTS audio.

Surround

When the rear seat-optimized function is operating, the surround effect can be enjoyed at five separate levels.

Indication	Volume change
Surround MIN	Minimum
Surround LOW	Low
Surround MID	Medium
Surround HI	High
Surround MAX	Maximum

Turn the audio control dial to select Surround MIN-MAX mode. The selected mode will be indicated.

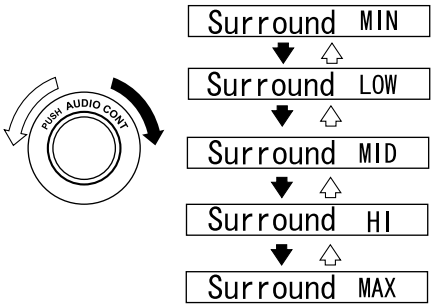

BEEP setting

The beep-sound when operating the audio system can be set on or off.

ILLM EFT setting (Illumination setting during operation)

The audio system illumination during operation can be set on or off.

Time adjustment

Rotating the audio control dial switches the display between 12 and 24-hour clock time (page 6-124).

MEMO

▼Operating the Radio

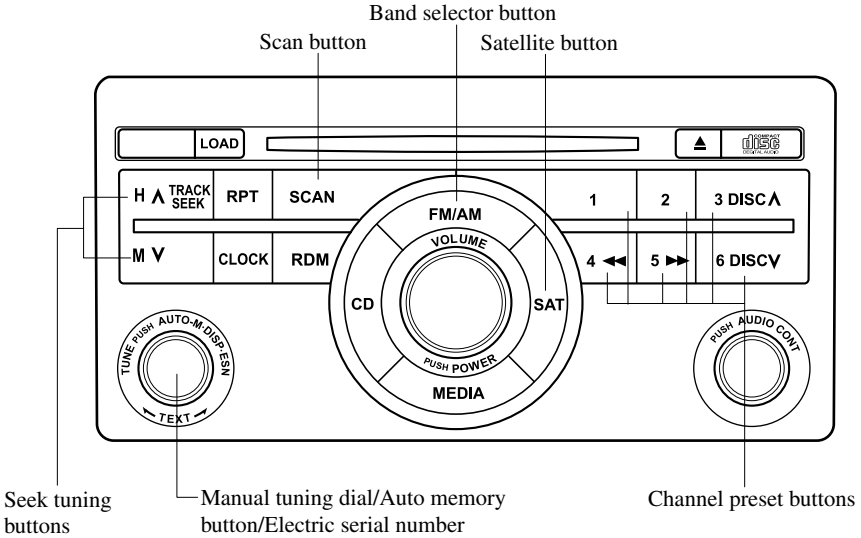

Radio ON

Press a band selector button (**FM/AM**) to turn the radio on.

Band selection

Successively pressing the band selector button (**FM/AM**) switches the bands as follows: FM1→FM2→AM.

The selected mode will be indicated. If FM stereo is being received, “ST” will be displayed.

NOTE

If the FM broadcast signal becomes weak, reception automatically changes from STEREO to MONO for reduced noise, and the “ST” indicator will go out.

Tuning

The radio has the following tuning methods: Manual, Seek, Scan, Preset channel, and Auto memory tuning. The easiest way to tune stations is to set them on preset channels.

NOTE

If the power supply is interrupted (fuse blows or the battery is disconnected), the preset channels will be canceled.

Manual tuning

Turning the manual tuning dial will change the frequency higher or lower.

Seek tuning

Pressing the seek tuning button (∧ , ∨) will cause the tuner to seek a higher or lower frequency automatically.

NOTE
If you continue to press and hold the button, the frequency will continue changing without stopping.

Scan tuning

Press the scan button (**SCAN**) to automatically sample strong stations. Scanning stops at each station for about 5 seconds. To hold a station, press the scan button (**SCAN**) again during this interval.

Preset channel tuning

The 6 preset channels can be used to store 6 AM and 12 FM stations.

1. To set a channel first select AM, FM1, or FM2. Tune to the desired station.
2. Depress a channel preset button for about 2 seconds until a beep sound is heard. The preset channel number and station frequency will be displayed. The station is now held in the memory.
3. Repeat this operation for the other stations and bands you want to store. To tune one in the memory, select AM, FM1, or FM2 and then press its channel preset button. The station frequency and the channel number will be displayed.

NOTE
If the power supply is interrupted (fuse blows or the battery is disconnected), the preset channels will be canceled.

Auto memory tuning

This is especially useful when driving in an area where the local stations are not known. Additional AM/FM stations can be stored without disturbing the previously set channels.

Press and hold the auto memory button (**AUTO-M**) for about 2 seconds until a beep sound is heard; the system will automatically scan and temporarily store up to 6 stations with the strongest frequencies in each selected band in that area.

After scanning is completed, the station with the strongest frequency will be tuned and its frequency displayed.
Press and release the auto memory button (**AUTO-M**) to recall stations from the auto-stored stations. One stored station will be selected each time; its frequency and channel number will be displayed.

NOTE
If no stations can be tuned after scanning operations, “A” will be displayed.

SATELLITE RADIO (SAT)

Vehicles equipped with the separately purchased SIRIUS digital satellite radio unit have the ability to receive channels of digital quality programming coast to coast via satellite. For information on use, read the Satellite Radio Kit manual accompanying the SIRIUS digital satellite radio unit. A subscription to SIRIUS digital satellite radio service is required (available in the U.S. - Except Alaska and Hawaii) to enable this feature once the separately purchased SIRIUS digital satellite radio unit has been installed. For subscription and channel information, or for digital satellite radio technical issues, contact SIRIUS directly at:

- Web: www.siriusradio.com
- Phone (24 hrs/day, 7 days/week): 888-539-SIRI (7474)
- E-mail: customercare@sirius-radio.com
- Mailing Address: Sirius Satellite Radio

1221 Avenue Of The Americas
New York, NY 10020
Attention: Customer Care

Include your Sirius Radio ESN (Electronic Serial Number) when subscribing or requesting technical assistance. See the Satellite Radio Kit manual accompanying the SIRIUS unit for complete satellite radio activation procedures and information on how to display the ESN#.

MEMO

▼Operating the Compact Disc (CD) Player*

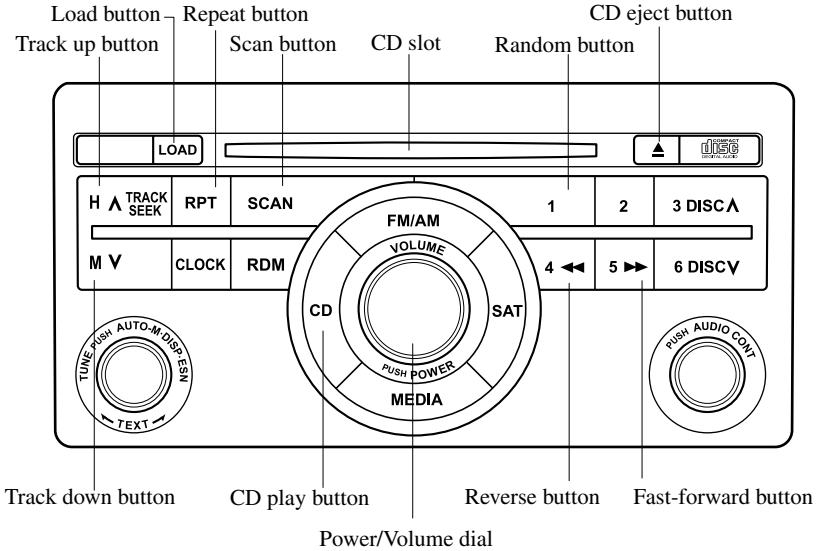

Type	Playable data
Music CD player (non-MP3 compatible)	· Music data (CD-DA)

Inserting the CD

Insert the CD into the slot, label-side up. The auto-loading mechanism will set the CD and begin play. There will be a short lapse before play begins while the player reads the digital signals on the CD.

Ejecting the CD

Press the CD eject button (⏏) to eject the CD.

Playback

Press the CD play button (CD) to start play when a CD is in the unit.
If a CD is not in the unit when the CD play button (CD) is pressed, “NO DISC” will flash on and off.

NOTE

When the load button (LOAD) is pressed, the CD will load and play even if the CD eject button (⏏) had been previously pressed.

Fast-forward/Reverse

Press and hold the fast-forward button (►►) to advance through a track at high speed.
Press and hold the reverse button (◄◄) to reverse through a track at high speed.

Track search

Press the track up button (∧) once to skip forward to the beginning of the next track.
Press the track down button (∨) once to skip back to the beginning of the current track.

*Some models.

Music scan

This feature helps to find a program by playing about the first 10 seconds of each track.

Press the scan button (SCAN) during playback to start the scan play operation (the track number will flash).
Press the scan button (SCAN) again to cancel scan playback.

NOTE
If the unit is left in scan, normal playback will resume where scan was selected.

Repeat playback

This feature makes it possible to listen to a selection repeatedly.

Press the repeat button (RPT) during playback. The current selection will be repeated (“RPT” will be displayed).
Press the repeat button (RPT) once again to cancel repeat playback.

Random playback

This feature allows the CD player to randomly select the order of the songs.

Press the random button (RDM) during playback. The next selection will be randomly selected (“RDM” will be displayed).
Press the random button (RDM) once again to cancel random playback.

Message display

If “CHECK CD” is displayed, it means that there is some CD malfunction. Check the CD for damage, dirt, or smudges, and then properly reinsert. If the message appears again, take the unit to an Authorized Mazda Dealer for service.

▼Operating the In-Dash CD Changer*

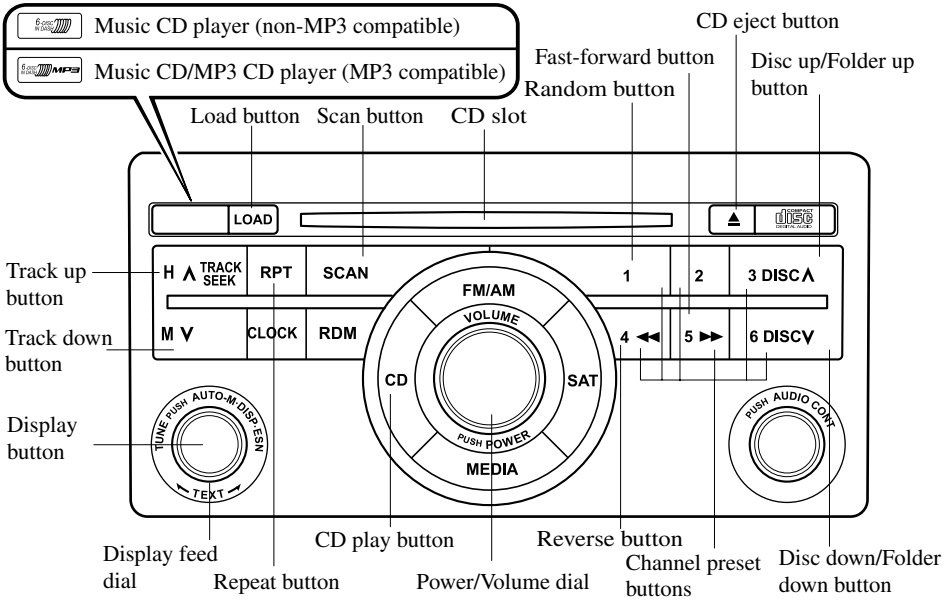

There are two types of In-dash CD changers. Check which In-dash CD changer your vehicle is equipped with.

Type	Playable data
Music CD player (non-MP3 compatible)	· Music data (CD-DA)
Music CD/MP3 CD player (MP3 compatible)	· Music data (CD-DA) · MP3 file

NOTE

If a disc has both music data (CD-DA) and MP3 files, playback of the two file types differs depending on how the disc was recorded.

Inserting the CD

The CD must be label-side up when inserting. The auto-loading mechanism will set the CD and begin play. There will be a short lapse before play begins while the player reads the digital signals on the CD.
The disc number and the track number will be displayed.

NOTE

The CD will begin playback automatically after insertion.
A CD cannot be inserted while the display reads "WAIT". A beeping sound can be heard during this waiting time. Simultaneously pressing the power/volume dial and the load button (LOAD) for about 2 seconds will turn this beeping sound ON or OFF.

*Some models.

Normal insertion

1. Press the load button (LOAD).
2. When “IN” is displayed, insert the CD.

Inserting CDs into desired tray number

1. Press and hold the load button (LOAD) for about 2 seconds until a beep sound is heard.
2. Press the channel preset button for the desired tray number while “WAIT” is displayed.
3. When “IN” is displayed, insert the CD.

NOTE
The CD cannot be inserted to the desired tray number if the number is already occupied.

Multiple insertion

1. Press and hold the load button (LOAD) for about 2 seconds until a beep sound is heard.
2. When “IN” is displayed, insert the CD.
3. When “IN” is displayed again, insert the next CD.

NOTE
The first-inserted CD will be played automatically when:
- *No other CD is inserted within 15 seconds after “IN” is displayed.*
- *The CD trays are full.*

Displaying the CD-inserted tray number

When you want to know the number for a CD-inserted tray, press the display button (DISP). The tray number will be displayed for 5 seconds.

Ejecting the CD

Normal ejection

1. Press the CD eject button (⏏). The disc number and “DISC OUT” will be displayed.
2. Pull out the CD.

NOTE
When the CD is ejected during play, the next CD will be played automatically.

Ejecting CDs from desired tray number

1. Press and hold the CD eject button (⏏) for about 2 seconds until a beep sound is heard.
   The “DISC OUT” display flashes.
2. Press the channel preset button for the desired CD number for less than 5 seconds after the beep sound is heard.
3. Pull out the CD.

Multiple ejection

1. Press and hold the CD eject button (⏏) for about 2 seconds until a beep sound is heard.
   The “DISC OUT” display flashes.
2. Press the CD eject button (⏏) again for less than 5 seconds after the beep sound is heard.

NOTE
If the button is not pressed and about 5 seconds have elapsed while “DISC OUT” is flashing, CDs are automatically ejected.

3. Pull out the CD, then the next CD will be ejected.

NOTE
- *CDs will be ejected starting with the one with the lowest number.*
- *All CDs in the tray will be ejected continuously.*
- *CDs can be ejected when the ignition switch is off. Press and hold the CD eject button (⏏) for about 2 seconds and all CDs will eject.*

Playback

Press the CD play button (CD) to start play when a CD is in the unit.
If a CD is not in the unit when the CD play button (CD) is pressed, "NO DISC" will flash on and off.

Fast-forward/Reverse

Press and hold the fast-forward button (►►) to advance through a track at high speed.
Press and hold the reverse button (◄◄) to reverse through a track at high speed.

Track search

Press the track up button (∧) once to skip forward to the beginning of the next track.
Press the track down button (∨) once to skip back to the beginning of the current track.

Disc search

During music CD playback

To change the disc, press the DISC button (DISC∧ or DISC∨) during playback.

During MP3 CD playback

To change the disc, press the DISC button (DISC∧ or DISC∨) for 1.5 seconds or more during playback.

Folder search (during MP3 CD playback)

To change to the previous folder, press the folder down button (DISC∨) for less than 1.5 seconds, or press the folder up button (DISC∧) for less than 1.5 seconds to advance to the next folder.

Music scan

This feature helps to find a program by playing about the first 10 seconds of each track.

Press the scan button (SCAN) during playback to start the scan play operation (the track number will flash).
Press the scan button (SCAN) again to cancel scan playback.

NOTE
If the unit is left in scan, normal playback will resume where scan was selected.

Repeat playback

During music CD playback

1. Press the repeat button (RPT) during playback to play the current track repeatedly. "RPT" is displayed.
2. Press the button again to cancel the repeat playback.

During MP3 CD playback

(Track repeat)

1. Press the repeat button (RPT) during playback to play the current track repeatedly. "RPT" is displayed.
2. To cancel the repeat playback, press the button again after 3 seconds.

(Folder repeat)

1. Press the repeat button (RPT) during playback, and then press the button again within 3 seconds to play the tracks in the current folder repeatedly. “RPT” is displayed.
2. Press the button again to cancel the repeat playback.

Random playback

Tracks are randomly selected and played.

During music CD playback

1. Press the random button (RDM) during playback to play the tracks in the CD randomly. “RDM” is displayed.
2. Press the button again to cancel the random playback.

During MP3 CD playback

(Folder random)

1. Press the random button (RDM) during playback to play the tracks in the folder randomly. “RDM” is displayed.
2. To cancel the random playback, press the button again after 3 seconds.

(CD random)

1. Press the random button (RDM) during playback, and then press the button again within 3 seconds to play the tracks on the CD randomly. “RDM” is displayed.
2. Press the button again to cancel the random playback.

Switching the display (MP3 compatible type)

Each time the display button (DISP) is pressed during playback, the display will switch in the following order.

Music CD

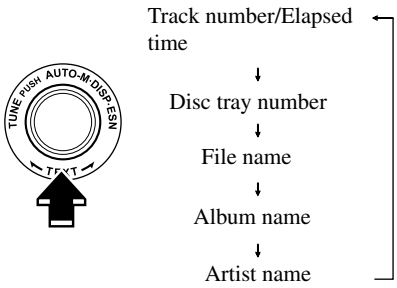

MP3 CD

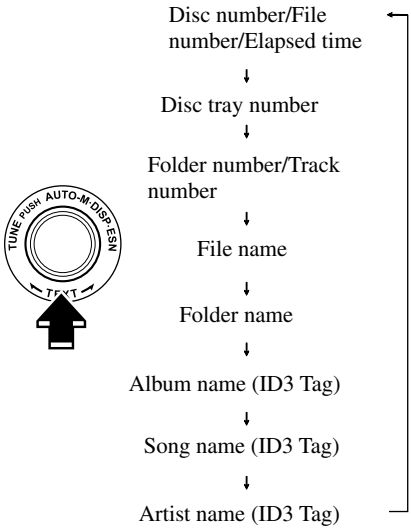

NOTE

(MP3 CD)

This unit can only read English (including numerals) one-byte characters. Depending on the CD writing software used, proper display may not be possible.

Display scroll (MP3 compatible type)

Only 12 characters can be displayed at one time. To display the rest of the characters of a long title, turn the display feed dial (TEXT) to the right. Hidden titles can be scrolled into the display one character at a time.

NOTE
The displayable number of characters is limited. If the number of characters, including the file extension (.mp3), exceeds 32 characters, it may not be fully displayed.

Message display

If “CHECK CD” is displayed, it means that there is some CD malfunction. Check the CD for damage, dirt, or smudges, and then properly reinsert. If the message appears again, take the unit to an Authorized Mazda Dealer for service.

▼Operating the Auxiliary jack

You can connect portable audio units or similar products on the market to the auxiliary jack to listen to music or audio over the vehicle's speakers, refer to Auxiliary Input (page 6-48).

▼Error Indications

If you see an error indication on the display, find the cause in the chart. If you cannot clear the error indication, take the vehicle to an Authorized Mazda Dealer.

Indication	Cause	Solution
CHECK CD	CD is inserted upside down	Insert the CD properly. If the error indication does not disappear, consult an Authorized Mazda Dealer
	CD is defective	Insert another CD properly. If the error indication does not disappear, consult an Authorized Mazda Dealer

Audio Control Switch Operation (Steering Wheel)

When the audio unit is turned on, operation of the audio unit from the steering wheel is possible.

NOTE

Because the audio unit will be turned off under the following conditions, the switches will be inoperable.

- *When the ignition switch is turned to the LOCK position.*
- *When the power button on the audio unit is pressed and the audio unit is turned off.*
- *When CD being played is ejected. (For the In-dash CD changer, when all CDs are ejected.)*

Without navigation system

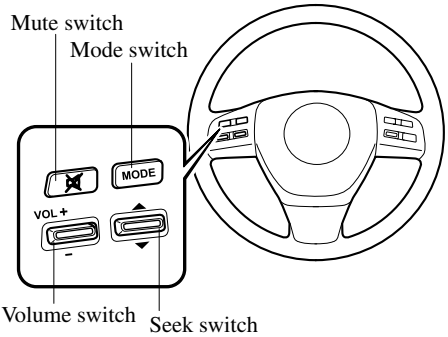

With navigation system

Use the VOICE switch for navigation system sound operation.
For details, refer to the separate manual “NAVIGATION SYSTEM”.

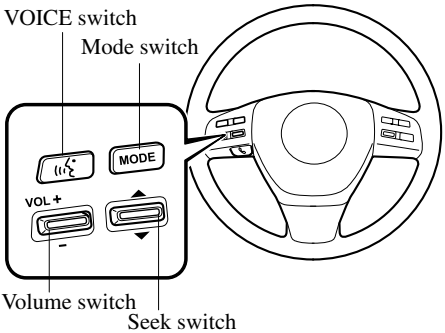

NOTE

- *The VOICE switch is operable with the audio unit turned off.*
- *Mazda has installed this system to prevent distraction while driving the vehicle and using audio controls on the dashboard. Always make safe driving your first priority.*

▼Adjusting the Volume

To increase the volume, pull up the volume switch.

To decrease the volume, press down the volume switch.

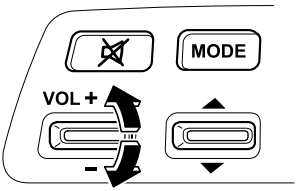

▼Changing the Source

Press the mode switch (MODE) to change the audio source (FM1 radio> FM2 radio> AM radio> CD player or CD changer> SIRIUS1> SIRIUS2> SIRIUS3> RSES or AUX> cyclical).

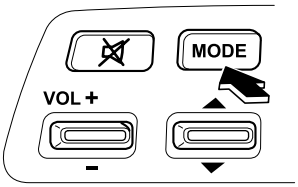

NOTE

CD, CD changer, RSES, and SIRIUS digital satellite radio modes cannot be selected in the following cases:

- *CD, CD changer, RSES, or SIRIUS digital satellite radio unit is not equipped on the audio system.*
- *CD has not been inserted.*

Connect a portable audio unit or similar product on the market to the auxiliary jack to listen to music or audio over the vehicle's speakers. Change the audio source to AUX mode (page 6-48).
The audio source is changed to the AUX mode only when a commercially available portable audio unit is connected to the auxiliary jack.

▼Seek Switch

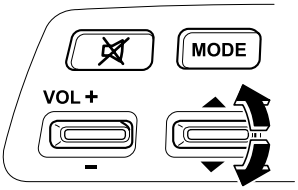

When listening to the radio

Pull up or press down the seek switch, the radio switches to the next/previous stored station in the order that it was stored (1—6).

Pull up or press down the seek switch for about 2 seconds until a beep sound is heard to seek all usable stations at a higher or lower frequency whether programmed or not.

When playing a CD

Pull up the seek switch to skip to the next track.
Press down the seek switch to repeat the current track.

▼Mute Switch

Press the mute switch ( ) once to mute audio, press it again to resume audio output.

NOTE

If the ignition switch is turned to the LOCK position with the audio muted, the mute will be canceled.
Therefore, when the engine is restarted, the audio is not muted. To mute the audio again, press the mute switch ( ).

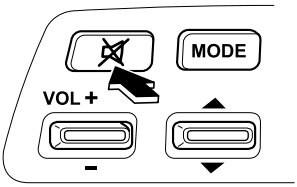

Auxiliary Input (AUX mode)

You can connect portable audio units or similar products on the market to the auxiliary jack to listen to music or audio over the vehicle's speakers.

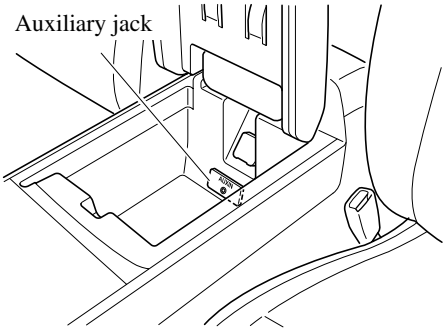

⚠ WARNING

Do not adjust the portable audio unit or a similar product while driving the vehicle:

Adjusting the portable audio unit or a similar product while driving the vehicle is dangerous as it could distract your attention from the vehicle operation which could lead to a serious accident. Always adjust the portable audio unit or a similar product while the vehicle is stopped.

NOTE

- *Before using the auxiliary jack, read the manufacturer's instructions for the product being connected.*
- *Use a commercially-available, non-impedance (3.5 ϕ) stereo mini plug for connecting the portable audio unit to the auxiliary jack. Before using the auxiliary jack, read the manufacture's instructions for connecting a portable audio unit to the auxiliary jack.*
- *To prevent discharging of the battery, do not use the auxiliary input for long periods with the engine off or idling.*
- *Noise may occur depending on the product connected to the auxiliary jack.*
- *If a power supply from the portable audio unit is needed, use the unit's batteries. Using the power socket equipped on the vehicle may cause noise depending on the unit connected to the power supply socket.*

⚠ WARNING

Do not allow the connection plug cord to get tangled with the parking brake or the shift lever:

Allowing the plug cord to become tangled with the parking brake or the shift lever is dangerous as it could interfere with driving, resulting in an accident.

⚠ CAUTION

Do not place objects or apply force to the auxiliary jack with the plug connected.

NOTE

- *Insert the plug to the auxiliary jack securely.*
- *Insert or remove the plug with the plug perpendicular to the auxiliary jack hole.*
- *Insert or remove the plug by holding its base.*

To operate the portable audio unit

1. Turn the ignition switch to the ACC or ON position.
2. Press the power/volume dial to turn the audio system on.
3. Press the MEDIA button (MEDIA) of the audio unit or the mode switch (MODE) of the audio control switch to change to the AUX mode.

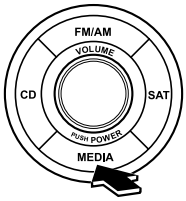

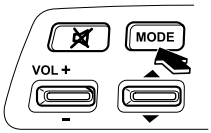

NOTE

- *Set the volume of the portable audio unit to the maximum within the range that the sound does not become distorted, then adjust the volume using the power/volume dial of the audio unit or the volume button (+ , −) of the audio control switch.*
- *If the connection plug is pulled out from the auxiliary jack while in AUX mode, noise may occur.*

Safety Certification

This CD player is made and tested to meet exacting safety standards. It meets FCC requirements and complies with safety performance standards of the U.S. Department of Health and Human Services.

CAUTION

- *This CD player should not be adjusted or repaired by anyone except qualified service personnel.*
  If servicing is required, contact an Authorized Mazda Dealer.
- *Use of controls or adjustments or performance of procedures other than those specified herein may result in hazardous laser exposure. Never operate the CD player with the top case of the unit removed.*
- *Changes or modifications not expressly approved by the party responsible for compliance could void the user's authority to operate this equipment.*

NOTE

For CD player section:
This device complies with part 15 of the FCC Rules. Operation is subject to the following two conditions: (1) This device may not cause harmful interference, and (2) this device must accept any interference received, including interference that may cause undesired operation.

NOTE

This equipment has been tested and found to comply with the limits for a Class B digital device, pursuant to part 15 of the FCC Rules. These limits are designed to provide reasonable protection against harmful interference in a residential installation. This equipment generates, uses, and can radiate radio frequency energy and, if not installed and used in accordance with the instructions, may cause harmful interference to radio communications. However, there is no guarantee that interference will not occur in a particular installation.

Rear Entertainment System*

▼Rear Entertainment System Outline

The Rear Entertainment System has a 9.0-inch wide LCD, as well as DVD video, DVD audio, video CD, audio CD, and MP3/WMA CD playback functions. Moreover, the system is equipped with input terminals for video picture and audio sound, and AV equipment such as a video game player or a video camera can be connected and displayed on the monitor screen.

▼Proper Operation of Rear Entertainment System

For safe driving, read the following warnings and cautions before starting operation, and use the system properly.

⚠ WARNING

- *Do not disassemble or modify this unit.*
  It may cause an accident, fire, or electrical shock.
- *Do not use if there is a malfunction condition such as no screen image or sound.*
  It may cause an accident, fire, or electrical shock. Follow the procedures in "Symptoms and Actions" (page 6-100) and if the problem is not resolved, consult an Authorized Mazda Dealer.
- *Do not use if some problem has occurred.*
  If any problem occurs, such as a foreign material penetration, spilled liquid, smoking from internal burning, or other abnormal smells, stop operation immediately and consult an Authorized Mazda Dealer. If operation is continued, it may cause an accident, fire, or electrical shock.
- *Lower the volume to minimum before turning off the power.*
  If the volume is set high, loud sound will be produced when turning on the power, causing auditory problems or an accident.
- *Adjust the volume while driving so that ambient sound can be heard.*
  If the volume is too high and ambient sound cannot be heard while driving, driving operation could be obstructed causing an accident.
- *Do not leave the remote controller and the headphones unstowed.*
  If the remote controller and the headphone are not stowed, they could fall under the brake pedal during a sudden stop or while turning, which could obstruct driving operation and cause an accident.

⚠ CAUTION

- *Do not put foreign material into the disc slot.*
  It may cause a fire or malfunction.
- *Do not clean plastic finished parts with solvent such as benzene or thinner.*
  The parts may deform causing a fire or malfunction.

*Some models.

▼Operating Tips for Disc

Playable discs

DVD video[*1], DVD audio[*2], video CD, audio CD, CD-R, CD-RW, DVD-R, DVD-RW and dts CD[*3] can be played.

NOTE

It may not be possible to play DVD video, DVD audio, video CD, audio CD, and MP3/WMA CD according to the procedures indicated in these instructions if the playback conditions have been restricted by the producer.
Read the instruction manual accompanying the DVD video, video CD, DVD audio, audio CD.

DVD video	●Region code must include “1” or “ALL”. ●NTSC (National Television System Committee) recorded type. ●8 cm (3in) or 12 cm (5in) size
DVD videos bearing the following logo can be played.	
DVD audio	
DVD audio bearing the following logo can be played.	
DVD-R and DVD-RW	
DVD-Rs and DVD-RWs bearing each of the following logos can be played.	
Video CD, audio CD, CD-R, and CD-RW	●Playback control function supported. ●8 cm (3in) or 12 cm (5in) size ●MP3 recorded type.
Video CDs, audio CDs, CD-Rs, and CD-RWs bearing each of the following logos can be played.	

*1: Audio is not produced by the headphones when DTS audio is selected. Listen to DTS audio over the vehicle's speakers.
*2: Stereo playback is produced.
*3: Audio is not produced from the headphones. Listen to this audio from the speakers.

Unplayable discs

- Discs not bearing the logo mark indicated in the above table.
- Discs not including “1” or “ALL” in region code.
- Discs recorded in other than NTSC (e.g. PAL or SECAM).

- DVD-ROM, DVD-RAM, DVD+RW, CD-ROM, CDV, CD-G, CVD, VSD, SVCD, SACD, photo CDs, non-conventional discs (e.g. heart-shaped), and partially transparent discs.
- Discs recorded in CD-TEXT format.
- HD DVD and Blu-ray discs

Handling of discs

- Do not use non-conventional discs such as heart-shaped, octagonal discs, or discs with a memory portion that is transparent or translucent. The unit could be damaged.

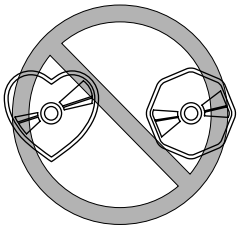

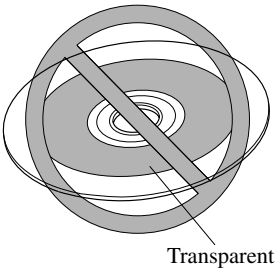

- When driving over uneven surfaces, the sound may jump.
- Be sure never to touch the signal surface when handling the discs. Pick up the discs by grasping the outer edge or the edge of the hole and the outer edge.
- Do not write on or attach labels, stickers or similar to discs.
- Defective (cracked or badly bent) discs should never be used.
- A new disc may have rough edges on its inner and outer perimeters. If a disc with rough edges is used, proper setting will not be possible and the unit will not play the disc. Remove the rough edges in advance by using a ball-point pen or pencil as shown below. To remove the rough edges, rub the side of the pen or pencil against the inner and outer perimeter of the discs.

Disc cleaning

Do not use record sprays, antistatic agents, or household spray cleaners. Volatile chemicals such as benzine and thinner can also damage the surface of the disc and must not be used. Anything that can damage, warp or fog plastic should never be used to clean discs.

Condensation

Immediately after turning on the heater when the vehicle is cold, the disc or optical components (prism and lens) in the unit may become clouded with condensation. At this time, the disc will eject immediately when placed in the unit. A clouded disc can be corrected simply by wiping it with a soft cloth. Clouded optical components will clear naturally in about an hour. Wait for normal operation to return before attempting to use the unit.

Operating tips for DVD video

Region code

The playback restriction area is set in a DVD video. The playback restriction area is indicated by a region code, and a DVD video can be played only in its indicated area. The region code for U.S.A. and Canada are “1”. DVD videos bearing region code including “1” or “ALL” on the package or the instruction manual can be played by this unit. The region code setting for this unit has been set to “1”.
DVD videos bearing any of the following logos on the package or instruction manual can be played.

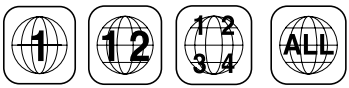

Playable DISC specification

CD-R and CD-RW including MP3/WMA files can be played with this unit. Discs which conform to the following formats can be played.

Name	Standard	Explanation
CD-R, CD-RW format	ISO9660	Level 1
		Level 2
	ISO9660 extension	Joliet
		Romeo
Multi-session	Supported	
Maximum hierarchy number	8 hierarchies (Including root)	
Maximum folder number	256 folders	
Maximum file number	512 files (Total capacity included in a disc.) Files other than MP3 or WMA are not included.)	

Operating tips for MP3

NOTE

Supply of this product only conveys a license for private, non-commercial use and does not convey a license nor imply any right to use this product in any commercial (i.e. revenue-generating) real time broadcasting (terrestrial, satellite, cable and/or any other media), broadcasting/streaming via the Internet, intranets and/or other networks or in other electronic content distribution systems, such as pay-audio or audio-on-demand applications. An independent license for such use is required. For details, please visit http://www.mp3licensing.com.

Playable MP3 file specification

Playable MP3 files are as follows:

Item		Content
Specification		MPEG1 AUDIO LAYER3
		MPEG2.5 AUDIO LAYER3
		MPEG2 AUDIO LAYER3
Sampling frequency	MPEG1	32, 44.1, 48kHz
	MPEG2	16, 22.05, 24kHz
Bit rate	MPEG1	32, 40, 48, 56, 64, 80, 96, 112, 128, 160, 192, 224, 256, 320 kbps
	MPEG2, 2.5	32, 40, 48, 56, 64, 80, 96, 112, 128, 144, 160 kbps
VBR (Variable Bit Rate)		Supported
Channel mode		Stereo, Joint stereo, Dual channel, Monaural
ID3 tag		Ver. 1.0, Ver. 1.1 title, artist name, album name

- This unit corresponds to MP3 files in which both header and data comply with the MP3 format.

- This unit corresponds to multi-session recorded disc playback at a maximum of 49 sessions.
- Some data on multi-session recorded discs cannot be played.
- Playback of discs with added sessions is possible.
- Packet Write recorded discs cannot be played.
- This unit does not correspond to MP3i (MP3 interactive), MP3 PRO, and RIFF-style MP3 formats.
- The maximum number of characters available for a file name is as follows, however, the displayable number of characters on this unit is limited.

	Maximum number of characters in a file name (including a separator "." and the three letters of the file extension)
ISO9660 level 1	12*
ISO9660 level 2	31*
Joliet extended format	64
Romeo extended format	128

* English one-byte characters (capitalized only) and underbar "_" are available.

MP3

⚠ CAUTION

This unit plays files with the (.mp3) file extension as a MP3 file. Do not use the MP3 file extension for files other than MP3 files. It may cause noise or a malfunction.

- In a MP3 file, the track name, artist name, album name and category name are recorded with data called "ID3-Tag", and the information can be displayed on the monitor.
- MP3 files which do not comply with the specific standard may not be played correctly or its file and folder name may not be displayed correctly.
- The file extension may not be provided depending on the computer operating system, version, software, or settings. In this case, add the file extension ".mp3" to the end of the file name, and then write the disc.

Playlist

This unit can play playlist files. Playlist is a function that allows free setting of the playback order of MP3 files. The file extension of a playlist file in which the order of playback is recorded is ". m3u" or ". pls".

Operating tips for WMA

WMA is short for Windows Media Audio and is the audio compression format used by Microsoft.
Audio data can be created and stored at a higher compression ratio than MP3.
*Microsoft and Window Media are registered trademarks of Microsoft Corporation U.S. in the United States and other countries.

Playable WMA file specification

CD-R and CD-RW including WMA files can be played with this unit. Discs which conform to the following formats can be played.
Playable WMA files are as follows:

Item		Content
Specification		Windows Media Audio Version7.0
Sampling frequency	Bit rate	22.05kHz . . . . 32 kbps
		32kHz. . . . . 48, 64 kbps
		44.1kHz . . . . . 48, 64, 80, 96, 128, 160, 192, 256, 320 kbps
		48kHz. . . . . 64, 96, 128, 160, 192 kbps
VBR (Variable Bit Rate)		Supported
Channel mode		Stereo/Monaural
WMA tag		Title, artist name, album name

WMA

⚠ CAUTION

This unit plays files with the (.wma) file extension as a WMA file. Do not use the WMA file extension for files other than WMA files. It may cause noise or a malfunction.

- In a WMA file, the track name, artist name, album name and category name are recorded with data called “WMA-Tag”, and the information can be displayed on the monitor.
- WMA files which do not comply with the specific standard may not be played correctly or its file and folder name may not be displayed correctly.
- The file extension may not be provided depending on the computer operating system, version, software, or settings. In this case, add the file extension “.wma” to the end of the file name, and then write the disc.

Operating tips for Dolby

Manufactured under license from Dolby Laboratories.
“Dolby,” “MLP Lossless,” and the double-D symbol are trademarks of Dolby Laboratories.

DOLBY
DIGITAL

Operating tips for dts

"DTS" and "DTS Digital Surround" are registered trademarks of Digital Theater Systems, Inc.

▼Operation Tips for Headphones

To listen to audio other than from the speakers of the Rear Entertainment System, it is necessary to use the wireless headphones that are included.
Specification

Item	Content
Transmission system	Infrared light
Modulation system	Frequency modulation
Carrier frequency	Right channel 2.8 MHz, left channel 2.3 MHz

Part Names

▼Rear Entertainment System Main Unit

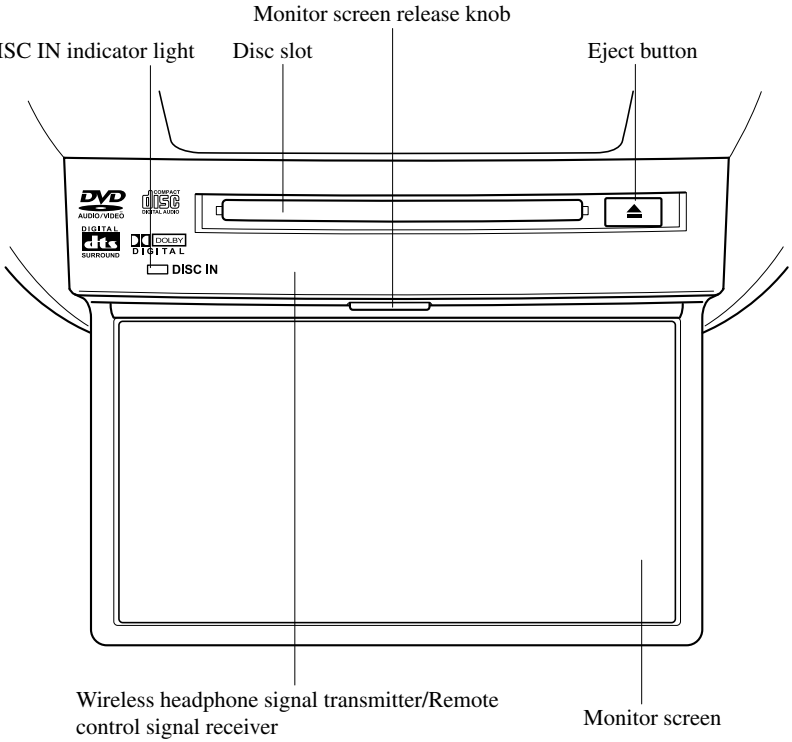

▼Remote Controller

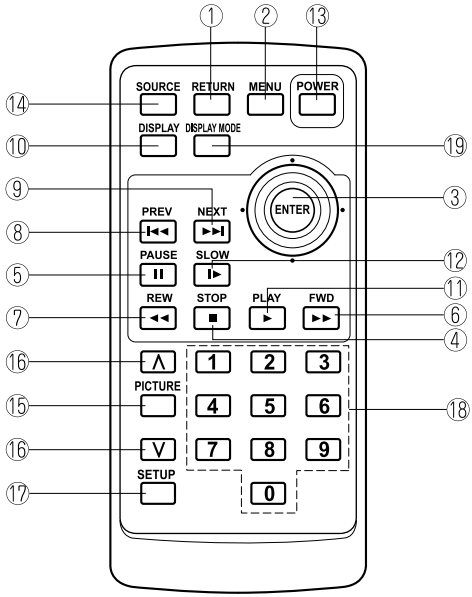

No.	Name	No.	Name
①	RETURN button	⑪	PLAY button
②	MENU button	⑫	Slow playback button
③	ENTER/Select button	⑬	POWER button
④	STOP button	⑭	SOURCE button
⑤	PAUSE button	⑮	Picture adjust mode button
⑥	Fast-forward button	⑯	Picture adjust button
⑦	Rewind button	⑰	SET UP button
⑧	PREVIOUS (Track down) button	⑱	Number keys
⑨	NEXT (Track up) button	⑲	DISPLAY MODE button
⑩	DISPLAY button		

▼Headphone

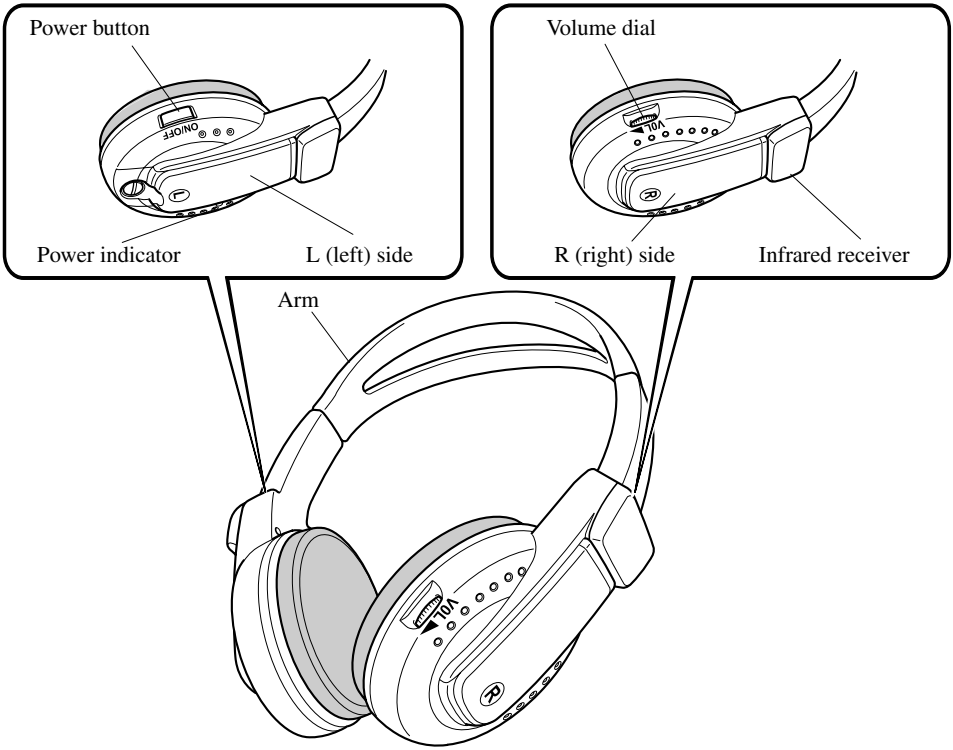
Power button
ON/OFF
Power indicator
L (left) side
Volume dial
VOL
R (right) side
Infrared receiver
Arm
VOL

Before Operation

▼Display Opening/Closing

⚠ CAUTION

- *Close the display while the Rear Entertainment System is not in use. If the display is left open, a passenger could be injured by hitting the display, or the display could be damaged.*
- *Do not press the monitor screen while opening the display. It may cause a malfunction.*

Opening the display

Press the monitor screen release knob and open the display until it is in the lock position.

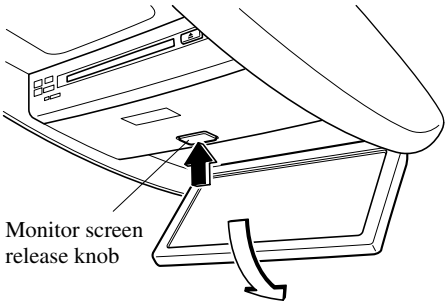

Closing the display

Close and press the display until a clicking sound can be heard.

NOTE

- *If the display is closed while the power is on, it automatically turns off.*
- *The display locks in two positions when opened to 100 or 120-degrees.*

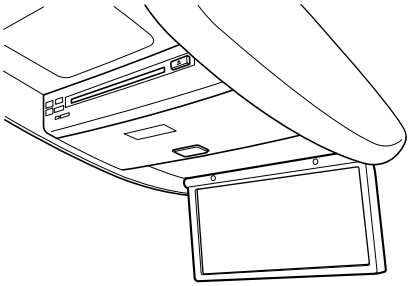

▼Disc Insertion/Ejection

⚠ CAUTION

If the signal surface of a disc is touched, it could cause the sound to skip. Pick up a disc by grasping the edge of the hole and the outer edge.

NOTE

When no disc is inserted, "No Disc" is displayed on the monitor.

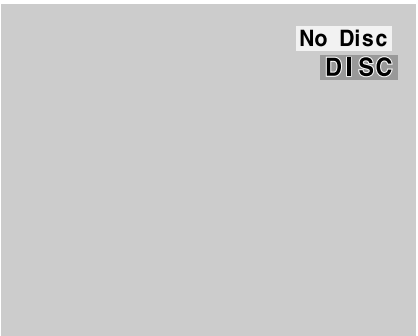

Inserting the disc

Insert the disc into the disc slot with the label-side up.

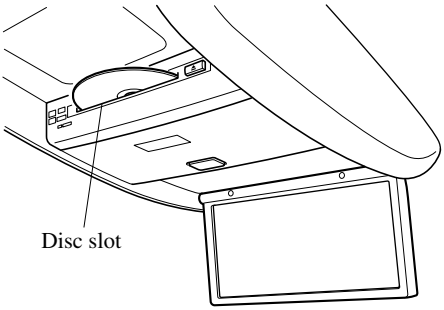

⚠ CAUTION

Insert the disc with its label-side (decorated side) facing upward. If the disc is inserted upside-down, it may cause a malfunction.

NOTE

If a disc is inserted while the Rear Entertainment System is turned off but the display is open, and when the ignition switch is in the ACC or ON position, the system automatically turns on and starts playback.

Ejecting the disc

Press the eject button to eject the disc.

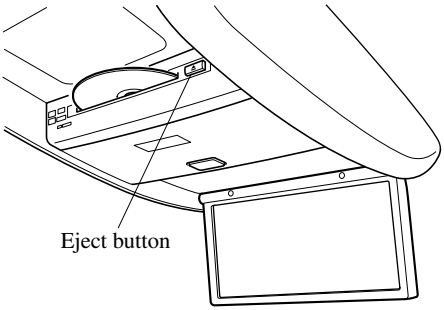

NOTE

- *When the eject button is pressed, the disc is ejected halfway.*
- *A disc can be ejected with the Rear Entertainment System turned off.*

▼Picture Adjustment

The brightness (BRIGHT), color adjustment (TINT), color density (COLOR), and contrast (CONTRAST) of the screen can be adjusted.
Press the picture adjust button (PICTURE) on the remote controller to change to the picture adjustment mode.
The picture mode changes in the order of BRIGHT →TINT →COLOR →CONTRAST →OFF each time the button is pressed in this mode.
Press the picture adjust button (∧) or (∨), positioned to top/bottom of the picture adjustment mode button (PICTURE), to adjust each picture mode.

NOTE

- *If the picture adjustment mode is on and no operation has been done for about 5 seconds, the mode is canceled automatically.*
- *If the picture is no longer adjustable by pressing the picture adjust button (∧) or (∨), it indicates that the adjustment value has reached the maximum/minimum value.*

Adjusting the brightness

1. Press the picture adjustment mode button (PICTURE) and select the BRIGHT mode.
2. Press the picture adjust button (∧) or (∨) to adjust.
   - Picture adjust button (∧): Brighten

- Picture adjust button (∨): Darken

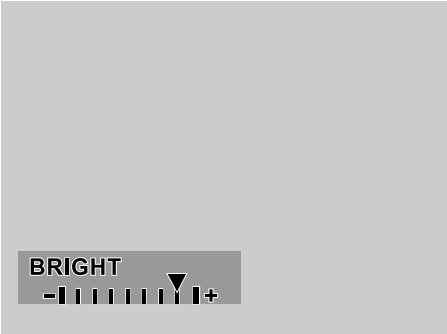

Adjusting the color adjustment

1. Press the picture adjustment mode button (PICTURE) and select the TINT mode.
2. Press the picture adjust button (∧) or (∨) to adjust.
   - Picture adjust button (∧): Green
   - Picture adjust button (∨): Red

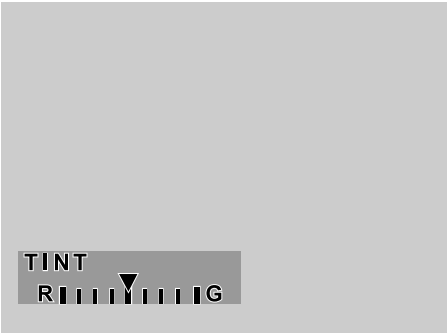

Adjusting the color density

1. Press the picture adjustment mode button (PICTURE) and select the COLOR mode.
2. Press the picture adjust button (∧) or (∨) to adjust.
   - Picture adjust button (∧): Darken
   - Picture adjust button (∨): Lighten

Adjusting the contrast (definition)

1. Press the picture adjustment mode button (PICTURE) and select the CONTRAST mode.
2. Press the picture adjust button (∧) or (∨) to adjust.
   - Picture adjust button (∧): Higher
   - Picture adjust button (∨): Lower

▼Screen Size Setting

The size of the screen can be changed. Press the DISPLAY MODE button to set the desired screen size.
The screen size changes in the order of Full →Normal →Wide →Cinema each time the button is pressed.

Full screen
Image is displayed on the full screen.

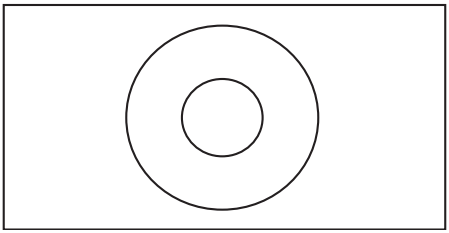

* A 16:9 screen ratio image is shown in the above figure.

Normal screen
A 4:3 screen ratio image is the standard display, and black bands appear on each side of the screen.

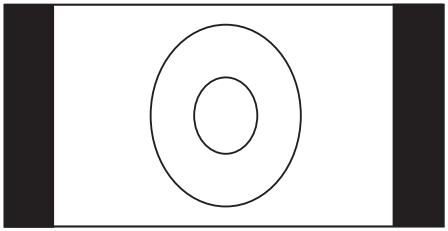

* A 16:9 screen ratio image is scaled to a 4:3 screen ratio.

Wide screen
The center part of the image is compressed toward the center, and the surrounding area is enlarged toward the edge.

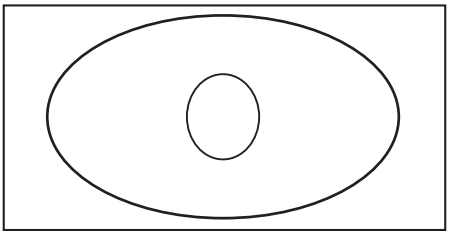

* A 16:9 screen ratio image is shown in the above figure.

Cinema screen
The image is enlarged upward and downward. A 4:3 and 16:9 screen ratio image are displayed with the upper/lower part of the image cut off.

NOTE
Because images are enlarged lengthwise for display, a horizontal streak may be seen, however, it does not indicate a malfunction.

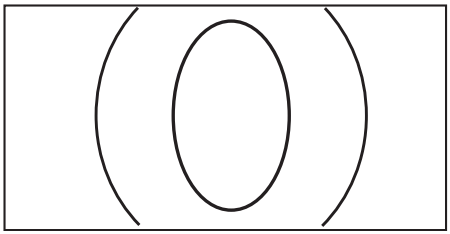

* A 16:9 screen ratio image is shown in the above figure.

NOTE
The display varies depending on the style of the image recorded on the disc.
Refer to the following table and set the screen size.

Image style	Recommendation
4:3	Normal or wide screen
16:9	Full screen
Letter box	Full or cinema screen

▼Display Off

Only sound, without image, can be played.
Press and hold the DISPLAY button (DISPLAY) on the remote controller.
“DISPLAY OFF” is displayed, and then image turns off.
Press any button on the remote controller to display the image.

▼Remote Controller

Operate the Rear Entertainment System with the remote controller except for disc insertion/ejection.

⚠ CAUTION

Do not apply excessive force to the remote controller or get it wet. Also, do not leave the remote controller in a place exposed to direct sunlight or high temperature. It could cause a malfunction.

NOTE

Operate the remote controller with it pointed to the disc slot of the unit. Signals may not be received depending of the angle.

Maintenance

Stow the remote controller in its case and put it in the seatback pocket of a front seat.
Place the remote controller into its case properly in the direction shown in the figure and stow it in the front seatback pocket.

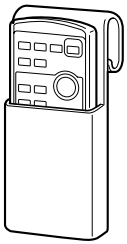

NOTE

If the remote controller is placed in the incorrect direction, abnormal noise or an operation error could result.

Using the remote controller

A battery has already been installed in the remote controller.
Remove the electrical leak-protection insulation sheet before using the remote controller.

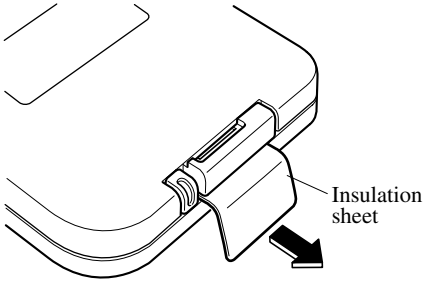

Replacing the battery

If the buttons on the remote controller are inoperable, or the operation range becomes narrow or unsteady, the battery may be dead.
Replace the battery using the following procedure.

Battery: CR2025 LITHIUM or equivalent (1)

1. Press the battery case tab in the direction indicated by the arrow using your thumbnail, and pull out the battery case.

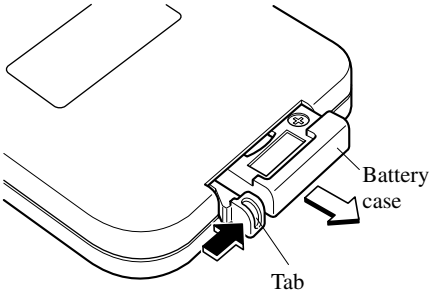

2. Remove the old battery and install a new one with the plus pole pointed up.

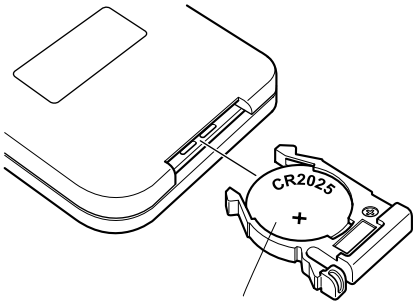

Battery (CR2025 LITHIUM or equivalent)

3. Press the battery case tab in the direction of the arrow until a click sound is heard.

NOTE
If the remote controller is inoperable even after the batteries are replaced, consult an Authorized Mazda Dealer.

⚠ CAUTION

- *Install the battery with the correct pole pointing in the correct direction. Battery leakage could occur if they are not installed correctly.*
- *When replacing the batteries, be careful not to bend the electrical terminals or get oil on them. Also, be careful not to get dirt in the remote controller as it could be damaged.*

Sound Output

▼Sound Output from Vehicle Speakers

Vehicles with audio system

Change the audio system to the Rear Entertainment System mode. Sound/Music being played by the Rear Entertainment System can be heard from the vehicle speakers.
For audio operation, refer to “Audio System” (page 6-17).

Press the MEDIA button (MEDIA) on the audio unit or the mode switch (MODE) of the audio control switch. “RSES” is displayed on the information display and it changes to the Rear Entertainment System sound.
Adjust the volume with the dial on the audio unit.

Vehicles with navigation system

Change the navigation system to the Rear Entertainment System mode. Sound/Music being played by the Rear Entertainment System can be heard from the vehicle speakers.
For navigation system operation, refer to the separate manual “NAVIGATION SYSTEM”.

Press the MEDIA button (MEDIA) on the navigation unit or the mode switch (MODE) of the audio control switch. “RSES” is displayed on the information display and it changes to the Rear Entertainment System sound.
Adjust the volume with the dial on the navigation unit.

▼Using the Headphone Speakers

⚠ CAUTION

- *For safety reasons, the driver should never wear the headphones while driving. Not being able to hear sound outside of the vehicle could result in a serious accident.*
- *Use the headphones with the volume set at moderate level. Listening at an excessive volume level for extended periods of time will have an adverse effect on your hearing ability.*
- *If the headphone arms are spread excessively is could result in damage.*
- *Do not apply excessive force to the headphones or get them wet. Also, do not leave the headphones in a place exposed to direct sunlight or high temperature. It could cause a malfunction.*

Rear Entertainment System

NOTE

- *To listen to audio other than from the speakers of the rear entertainment system, it is necessary to use the wireless headphones that are included. For headphone specification, refer to "Operation Tips for Headphones" (page 6-59).*
- *When the headphones are not in use, turn them off.*
- *DTS formatted sound cannot be generated through the headphones. Use the vehicle's speakers.*
- *If there is no sound produced from a signal for 3 minutes or longer after the headphone power is turned on, or there is no signal reception, the headphone power turns off automatically.*
- *If the headphones are continuously used for 4 hours or more after the sound signal is received, the headphone power turns off automatically.*

The acceptable range for signals (infrared rays) from the Rear Entertainment System is as follows:

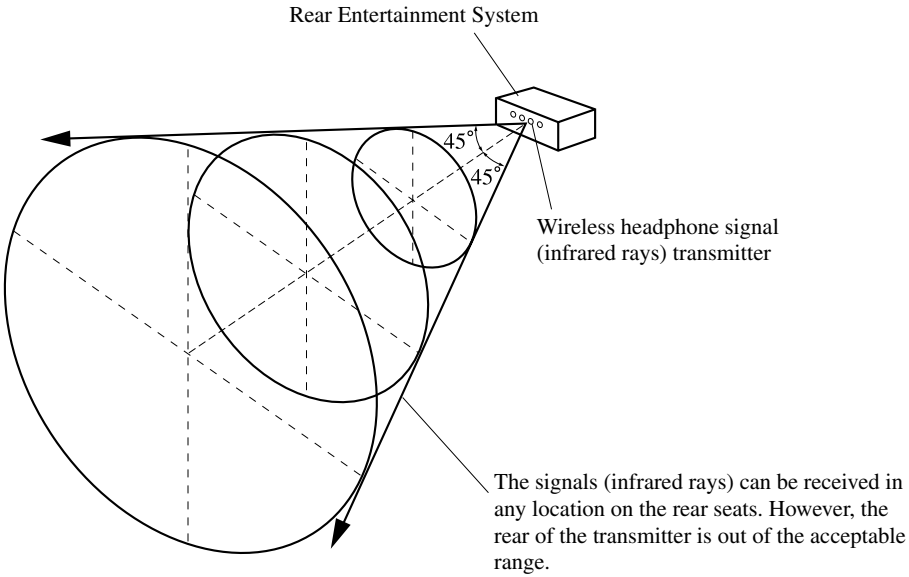

A wireless headphone can be used in any position on the rear seats, however, the sound may skip under the following conditions because the acceptable range varies or the signals are blocked.

- When affected by intense light such as direct sunshine.

- When the wireless headphone receiver does not point to the Rear Entertainment System transmitter.
- When the signal is blocked by an obstruction such as the seat.

Replacing the battery

1. Remove the screw using a coin or equivalent, and remove the cover. Remove the batteries.

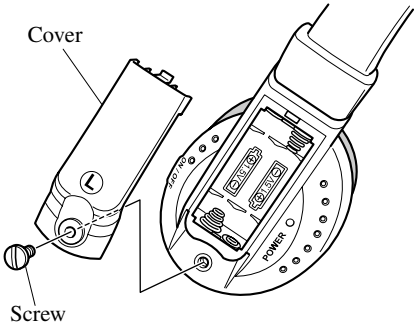

2. Insert two AAA-size batteries. Match the+ polarity of the batteries with the+ and− marks in the battery case.

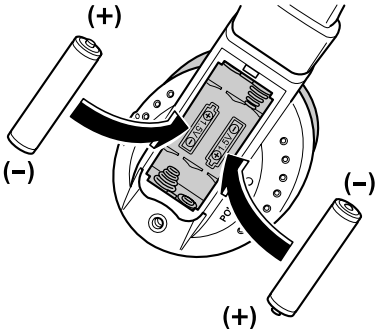

3. Install the cover.
4. Install the screw.

NOTE

Battery life (reference)
Manganese batteries: About 20 hours
Alkaline batteries: About 40 hours
The battery life is indicated as a reference and does not provide any guarantees. The battery life varies depending on usage conditions (volume, surrounding environment).

⚠ CAUTION

- *If the battery power is depleted the headphones will not operate properly. If any of the following occurs, replace the batteries.*
  - *The power indicator does not illuminate even when the power is turned on.*
  - *Noise is mixed with the sound.*
  - *The reception range narrows.*
- *Periodically inspect the batteries for leakage.*
- *If the headphones are not to be used for an extended period, remove the batteries.*
- *Be careful not to allow the battery case screw to become loose.*
- *Install the batteries with the (+)/(−) poles correctly positioned. Battery leakage could occur if they are not installed correctly.*
- *When replacing the batteries, be careful not to bend the electrical terminals or get oil on them.*
- *Be careful not to allow dirt to get into the headphones as it could damage them.*

The following points regarding the battery must be observed.
If the batteries are not handled properly, it could result in a headphone malfunction.

- *Do not use rechargeable batteries.*
- *When replacing the batteries, replace both batteries at the same time. Do not use a new battery and an old battery, or the different types of battery.*

Rear Entertainment System Functions

▼Mode

The Rear Entertainment System has Disc and AUX modes.

Mode	Function	Page
Disc mode	DVD video, video CD, DVD audio, and audio CD can be played.	6-74
AUX (Auxiliary) mode *	AV equipment with output terminals for image and sound, such as a video game player and a video camera, can be used.	6-88

* Auxiliary terminals in which AV equipment can be connected are equipped.
Refer to Auxiliary terminals and accessory socket on page 6-88.

Mode change

Press the SOURCE button. The mode changes between Disc and AUX.

→ Disc mode → AUX mode →
("DISC" is displayed.) ("AUX" is displayed.)

DVD video, DVD audio, Video CD, Audio CD and MP3/WMA CD Playback (Disc Mode)

DVD video, DVD audio, Video CD, Audio CD, and MP3/WMA CD can be played in the Disc mode.

⚠ CAUTION

For safe driving, adjust the volume while driving so that ambient sound can be heard.

NOTE

- *Do not use the Rear Entertainment System for a long period with the engine off. The vehicle battery could run down.*
- *To listen to the Rear Entertainment System sound from the vehicle speakers, change the audio or navigation system sound to the Rear Entertainment System sound.*
  Refer to Sound on page 6-69.
- *To listen to audio other than from the speakers of the rear entertainment system, it is necessary to use the wireless headphones that are included. For headphone specification, refer to "Operation Tips for Headphones" (page 6-59).*
- *The cooling fan of this unit may activate if the temperature of the unit is high, however, this does not indicate a malfunction.*

▼Basic Operation

Power ON/OFF

Turning on the power

The Rear Entertainment System automatically turns on when any of the following operations are done with the ignition switch in the ACC or ON position.

- The display is open and a disc is inserted.
- The POWER button on the remote controller is pressed.

Turning off

The Rear Entertainment System turns off when any of the following operations are done.

- The POWER button on the remote controller is pressed.
- The ignition switch is turned to the LOCK position.
- The display is closed.

Playback

The top menu or disc menu may be displayed on the monitor screen when a disc is played. From these menus, the disc functions can be performed.
Refer to Top menu and disc menu on page 6-77.

NOTE

- *For some discs, the top menu or disc menu may be displayed automatically after playback.*
- *Refer to the instruction manual attached to the disc for the top menu or disc menu.*

When no disc is inserted

1. Turn the ignition switch to the ACC or ON position.

2. Insert the disc into the disc slot.
   After the disc is inserted, the playback starts.

⚠ CAUTION

Insert the disc with its label-side (decorated side) facing upward. If the disc is inserted upside-down, it may cause a malfunction.

When a disc has been inserted

1. Turn the ignition switch to the ACC or ON position.
2. Turn on the Rear Entertainment System.
3. Press the PLAY button to start playback.

NOTE

If the Rear Entertainment System has been turned off during a previous playback, playback automatically resumes when the system is turned on.

Stopping the playback

Press the STOP button to stop the playback.
To resume the playback, press the PLAY button.

Resume playback function

The Rear Entertainment System stores the position where the playback has been stopped using the resume playback function.
Press the PLAY button to resume the playback from the position previously stopped.

NOTE

If the RETURN button is pressed after the playback has been stopped, the resume playback function is canceled. Once the resume playback function is canceled, the playback starts from the first chapter (DVD video)/track (video CD, audio CD, DVD audio, or MP3/WMA CD) when the PLAY button is pressed.

Pausing the playback

Press the PAUSE button to pause the playback.
Press the PAUSE or PLAY button to resume the playback.

Fast-forward/Reverse

Fast-forward

Image and sound is fast-forwarded while the FWD button (►►) is pressed.

Reverse

Image and sound is reversed while the REW button (◄◄) is pressed.

Slow playback (DVD video and video CD)

Press the SLOW button to slow the playback.
Press the SLOW or PLAY button to return to normal playback speed.

NOTE

- *Slow playback is not available for audio CD, DVD audio and MP3/WMA CD.*
- *The unit is muted while in slow playback.*

Skipping the chapter/track

Chapter (DVD video) or track (video CD, DVD audio, audio CD, and MP3/WMA CD) can be skipped (changed).

Fast-forward skip

Press the NEXT button (▶▶|) to skip to the next chapter/track.

Reverse skip

Press the PREV button (|◀◀) to return to the beginning of the current chapter/track.

NOTE

To return to the beginning of the previous chapter/track, press the PREV button (|◀◀) again within 2 seconds after the button is pressed.

Skipping to desired chapter/track

The playback can be started from the desired chapter (DVD video)/track (video CD, DVD audio and audio CD) by entering the chapter/track number.

1. Enter the chapter/track number using the number keys (0 to 9) while the disc is being played.
2. Press the ENTER button to start the playback from the selected chapter/track.
   Example: when selecting chapter/track number “10”
   1.Press the number key (1).
   2.Press the number key (0).
   3.Press the ENTER button.

NOTE

- *If a chapter/track number not in the disc is input, the last chapter/track is played.*
- *Refer to the instruction manual attached to the disc for chapter/track numbers.*

Skipping to desired title/group

The playback can be started from the desired title/group by entering the title/group number.

1. Enter the title/group number using the number keys (0 to 9) while the playback is stopped.
2. Press the ENTER button to start the playback from the selected title.
   Example: When selecting title number “2”
   1.Press the number key (2).
   2.Press the ENTER button.

NOTE

- *If a title/group number not in the disc is input, the last title/group is played.*
- *Refer to the instruction manual attached to the disc for the title/group numbers.*

Bonus group playback

1. Press the number button (0) while a disc is not being played.
   If the disc has a bonus group*, the display shows as follows.

2. Press the ENTER button to change the display to the password input screen, then enter the password.
   For the password, see the instruction manual attached to the disc.

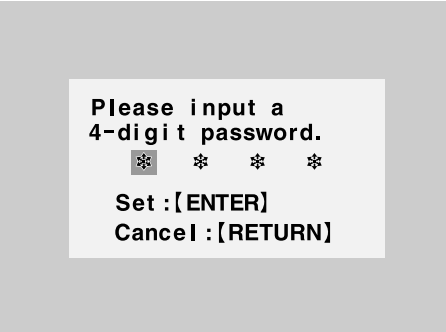

* Bonus group means the 'Bonus tracks' originally recorded in the disc.

▼Assist Functions (DVD video, DVD audio, video CD and audio CD)

Top menu and disc menu

NOTE
Operation may vary or cannot be performed depending on the disc. Refer to the instruction manual attached to the disc.

Top menu

Multiple titles may have been recorded on some discs.
For these DVD discs, the desired title can be selected in the top menu.

Disc menu

The unique functions of each DVD disc are recorded as the menu. This is referred to as the disc menu.
Various menu related images and sound are recorded in the disc menu.

Displaying/selecting top menu/disc menu

1. To display the top menu on the screen, press the MENU button while the disc is not being played. To display the disc menu on the screen, press the MENU button during playback.
2. Move the cursor to the desired menu by operating the select button up/down or left/right.
3. Press the ENTER button to operate the selected menu.
4. To return to playback, press the MENU button or the STOP button, then the PLAY button.

Function menu

In the function menu, the following items can be selected/operated while in playback.
① Language (sound and subtitle) selection (DVD video and DVD audio)
② Subtitle ON/OFF (DVD video)
③ Display angle change (DVD video and DVD audio)
④ Sound output balance adjustment (Video CD)
⑤ Repeat/random playback (Video CD, DVD audio and audio CD)

DVD video function menu

DVD audio function menu

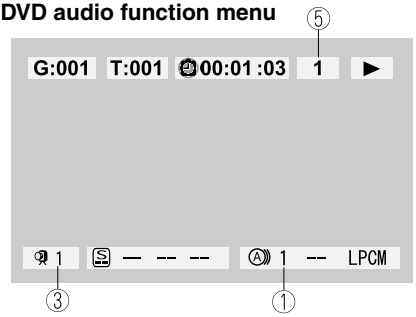

Video CD/audio CD function menu

NOTE

- *In the function menu, the title/group number, chapter/track number, and playback elapsed time cannot be selected/changed.*
- *Settings set in the function menu are available only for the current disc. Settings set in the initial setting function menu are available for the Rear Entertainment System unit itself so that the settings remain after the disc is changed. Refer to Initial setting function on page 6-83.*

Displaying the function menu

Press the DISPLAY button while in playback to display the function menu on the monitor screen.
Press the DISPLAY button again to cancel.

NOTE

For audio CD, the function menu is automatically displayed when playback is started.

Language (sound and subtitles) selection (DVD video and DVD audio)

Sound and subtitles can be changed to the desired language.

NOTE

Available languages varies depending on the DVD disc.

1. Press the DISPLAY button to display the function menu.
2. Move the cursor and select the sound select mode or subtitle select mode by operating the select button to the left or right.

3. Move the cursor and select the desired language by operating the select button up or down.
4. Press the DISPLAY button to finish the function menu.

Subtitle ON/OFF (DVD video)

Subtitle on/off can be set.

1. Press the DISPLAY button to display the function menu.

2. Move the cursor to the subtitle ON/OFF mode by operating the select button to the left or right.

3. Select ON to display the subtitles, or OFF to hide them by operating the select button up or down.
4. Press the DISPLAY button to finish the function menu.

Display angle change (DVD video and DVD audio)

The image can be displayed at the desired angle.

NOTE

- *Display angle change is not available for discs other than multi-angle recorded DVD discs. Refer to the instruction manual attached to the disc for details.*
- *The available angles vary depending on the disc.*

1. Press the DISPLAY button to display the function menu.
2. Move the cursor to the display angle change mode by operating the select button to the left or right.

3. Move the cursor and select the desired angle by operating the select button up or down.
4. Press the DISPLAY button to finish the function menu.

Sound output balance adjustment (Video CD)

1. Press the DISPLAY button during the video CD playback to display the function menu.
2. Move the cursor to the sound output balance adjustment mode by operating the select button to the left or right.

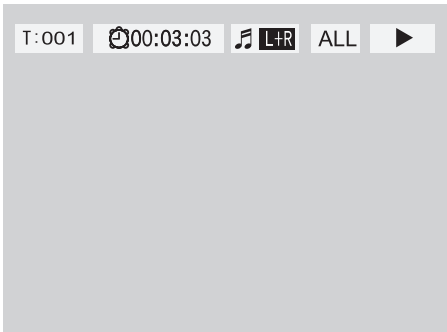

3. Set the sound output to the desired balance by operating the select button up or down.

   Press the button and the settings changes in the order of L+R →L →R. The sound balance changes according to the setting.

L: Audio recorded in the audio output channel from the left is output.
R: Audio recorded in the audio output channel from the right is output.
L + R: Audio recorded in the audio output channel from the left/right is output.

4. Press the DISPLAY button to finish the function menu.

Repeat/random playback (Video CD, DVD audio and audio CD)

Tracks can be played repeatedly or randomly.

1. Press the DISPLAY button while in the playback to display the function menu on the monitor screen.
2. Move the cursor to the repeat/random playback mode by operating the select button to the left or right.

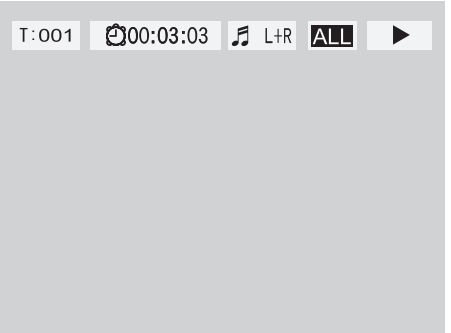

3. Select the desired mode by operating the select button up or down.

   (1) During DVD audio:
   Each time the button is pressed, the mode changes in the order of 1 — NON — RPF — NOF — RND — RNF — ALL — 1.
   ALL: Repeats all tracks.
   1: Repeats the current track.
   RPF: Repeats all tracks in the current group
   NOF: Stops playback after all tracks in the current group are played.
   RND: Randomly selects and plays a track from all tracks.
   RNF: Randomly selects and plays a track from the current group.
   (2) During video CD and audio CD
   Each time the button is pressed, the mode changes in the order of 1 — NON — RND — ALL — 1.
   ALL: Repeats all tracks. (Returns to the beginning of the disc after all tracks are played.)
   1: Repeats the current track.
   NON: Stops playback after all tracks in the disc are played.
   RND: Randomly plays a track.

4. Press the DISPLAY button to finish the function menu.

NOTE
The function menu is displayed during audio CD playback and it cannot be canceled by pressing the DISPLAY button during playback.

▼Assist Functions (MP3/WMA CD)

Folders and files

The order of MP3/WMA file playback is as follows:

- A folder number is assigned to each folder on a disc.

- For example, the folder numbers for folders (1), (3), and (5) in the figure are not displayed because they do not contain MP3/WMA files.
- Folders and files in a hierarchy are played in the order that they are recorded on the disc by the writing software.
- Up to 255 files in 8 hierarchies can be played.
- The loading time may be longer depending on the disc.

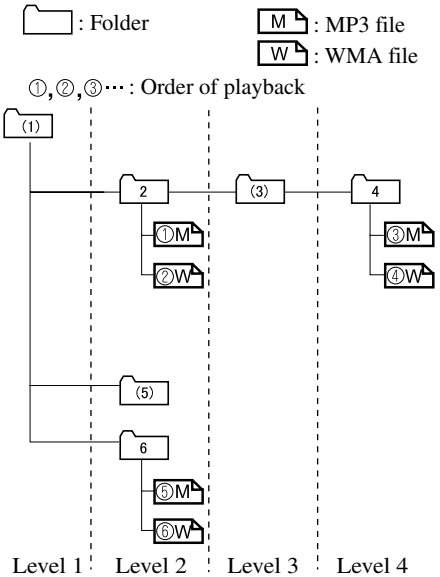

Function menu

If MP3/WMA files are to be played, operate the select button and move the cursor to select the playback file, playback mode, and display mode.

① Folder number/Playback list number
② File number
③ Playback elapsed time
④ Playback mode
⑤ Playback status
⑥ Folder/File information display window
⑦ Display mode

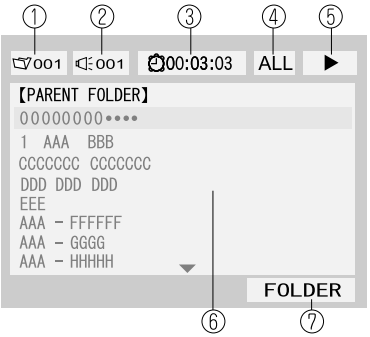

Changing the display mode

1. Move the cursor to the display mode by operating the select button to the left or right.
2. Change the display mode by operating the select button up or down.

Display	Displayed information
FOLDER	All folders and files display
TAG INFO	File tag display (FOLDER name, FILE name, TITLE name, ARTIST name, and ALBUM name) display
TREE IDX	Folder tree display
PLST IDX	Playlist display (If there is a playlist on the disc.)
PLAYLIST	Files on playlist display (If the files on the playlist are being played.)
CD TRACK	CD track display (If CD tracks on a disc which has both MP3/WMA and CD audio files are being played.)

Changing the playback mode

1. Move the cursor to the playback mode by operating the select button to the left or right.

2. Change the display mode by operating the select button up or down.

Display	Playback mode
ALL	All files are played repeatedly.
1	The current file is played repeatedly.
NON	All files are played once and the playback stops.
RPF	All files in the current folder are played repeatedly.
NOF	Files in the current folder are played once and the playback stops.
RND	All files are played randomly.
RNF	Files in the current folder are played randomly.

NOTE
If RND or RNF is selected during a playlist playback, files on the playlist are played randomly. Refer to Playlist File Playback on page 6-82.

Selection file

While in FOLDER display mode

1. Move the cursor to the folder/file information display window by operating the select button to the left or right.
2. Move the cursor to the desired folder/file by operating the select button up or down.
3. Press the ENTER button to play the selected file or to move to the selected folder.

NOTE
To return to an upper hierarchy, move the cursor to the "PARENT FOLDER" and press the ENTER button.

While in TREEIDX display mode

1. Move the cursor to the folder/file information display window by operating the select button to the left or right.
2. Move the cursor to the folder where the desired file is located by operating the select button up or down.
3. Press the ENTER button. Playback starts from the first track in the selected folder.

NOTE
- *"◀ " mark is attached to a folder if the folder has a playable MP3/WMA file.*
- *If a disc including a playlist is being played, the playlist file can be selected.*

Playlist file playback

Playlist files can be played using the following procedure:

1. Set the display mode to the TREEIDX mode. Refer to Changing the display mode on page 6-80.
2. Move the cursor to the PLAYLIST by operating the select button.
3. Press the ENTER button to change the display from TREEIDX to PLSTIDX.
4. Move the cursor to the desired playlist file by operating the select button up or down.
5. Press the ENTER button. Playback starts in the order programmed in the playlist file.

NOTE
The loading time after pressing the ENTER button may be longer depending on the disc.

▼Initial Setting Function

The settings set in the initial setting function remain after the unit is turned off or the disc is changed.
The following items can be set in the initial setting.
Lang: Sound and subtitle setting
Rating: Parental lock setting
Mark: On-Screen Mark, Angle Mark and Mode Priority settings
Audio: Audio DRC setting
Aspect: Not available

Displaying/selecting the initial setting function menu

1. Press the SET UP button while the disc is not being played to display the initial setting function menu on the monitor screen.

NOTE
- *The initial setting can be performed with no disc inserted.*
- *After setting the initial setting, the playback starts from the first chapter/track.*

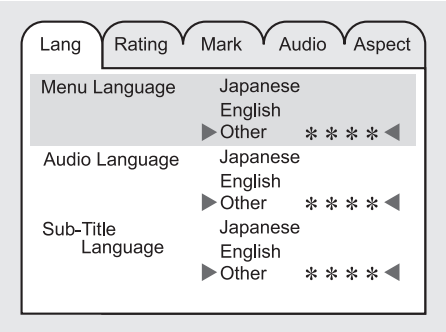

2. Move the cursor to the desired menu by operating the select button up/down or left/right.

3. Press the ENTER button. The selected menu is highlighted to indicate that the menu is selected.

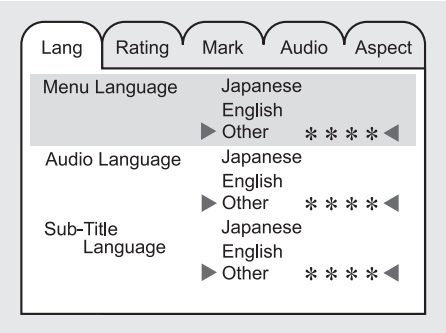

4. Select the item to be set by operating the select button up or down.

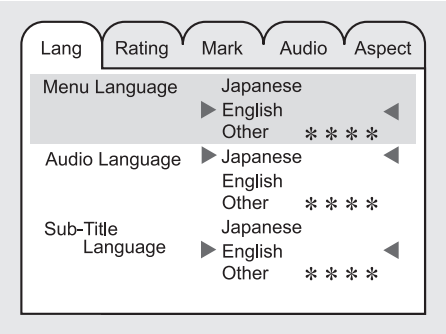

5. Press the ENTER button. The highlighted color returns to the previous color to indicate that the selected item is set.

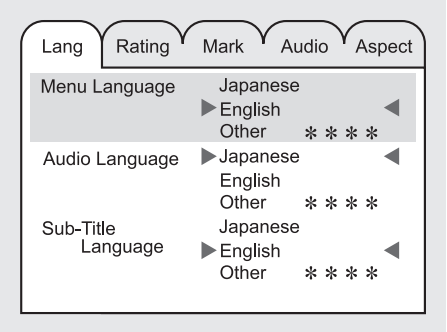

6. To finish the function menu on the monitor display, press the SET UP, MENU, or STOP button.

Lang (Language)

Sound and subtitles can be changed to the desired language.

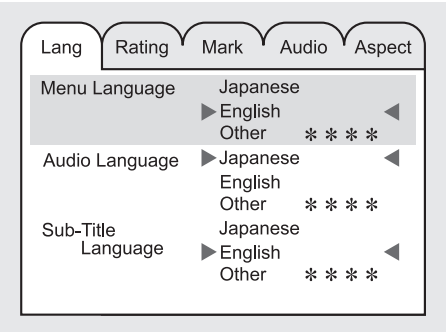

Menu language: Language used for top menu/disc menu
Sound language: Language used for movie sound (voice)
Subtitle language: Language used for subtitles

Changing to a language other than English and Japanese

NOTE

- *Languages other than English and Japanese can be set by entering the language code in the language code list. Refer to Language code list on page 6-92.*
- *If the selected language is not recorded in the disc, the language is not available.*

1. Move the cursor to “Other” by operating the select button up or down.
2. Press the ENTER button, and then operate the select button to the right.

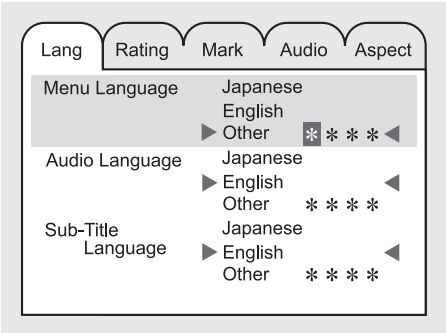

3. Enter the desired language code by pressing the number keys (0 to 9) or operating the select button up or down.
4. Press the ENTER button to set the language of the entered language code.

NOTE

If “English” or “Japanese” is selected afterward, the previously entered language code is cleared.

Rating

If the disc has a parental lock code, viewing can be restricted. Also, the setting can be protected by a password to prevent someone changing the setting.

Viewing can be restricted by setting the parent lock level.
For example, if the level is set to 6, level 7 or higher viewing is locked and cannot be played.

NOTE

- *Parent lock is not available depending on the disc.*
- *The initial password setting (when purchased) is "0000".*

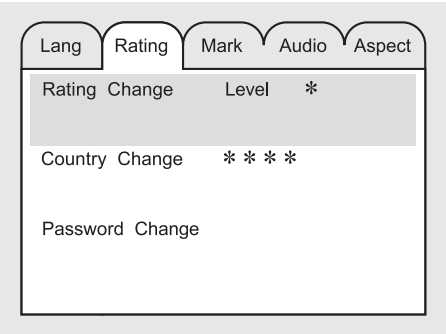

Rating change: Parent lock level setting
Country change: Setting for the country where the disc is being played.
Password change: Registered password changes

Changing the Rating setting

1. Enter the password by pressing the number keys (0 to 9) or operating the select button up or down.

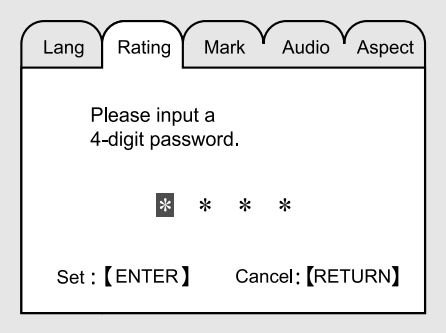

2. Press the ENTER button.
   If the password is confirmed, the Rating change mode is displayed.

NOTE

The setting cannot be changed without the correct password. Note down the password so you don't forget it.

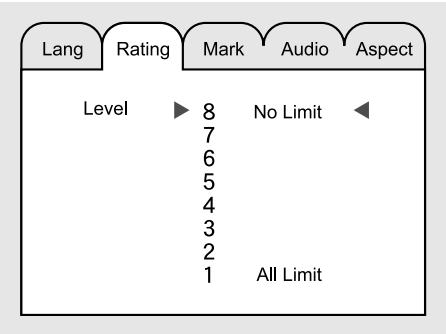

3. Select the desired parent lock level and press the ENTER button to set.

Country change

NOTE
It is necessary to set the country code because the parent lock level is different depending on the country. When using the unit in U.S.A., set the country code to "3018". The parent lock function is disabled without the country code setting (page 6-94).

1. Enter the password by pressing the number keys (0 to 9) or operating the select button up or down.

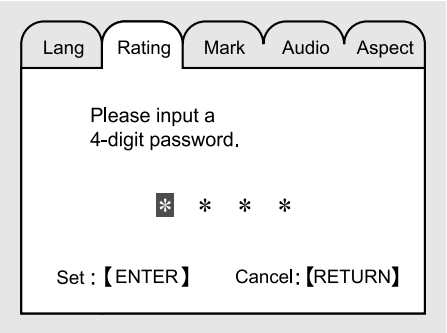

2. Press the ENTER button.
   If the password is confirmed, the password change mode is displayed.

NOTE
The setting cannot be changed without the correct password. Note down the password so you don't forget it.

3. Enter the country code by pressing the number keys (0 to 9) or operating the select button up or down.

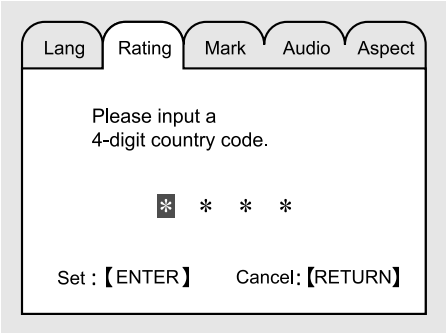

4. Press the ENTER button to set the country of the entered country code.

Changing the password

1. Enter the password by pressing the number keys (0 to 9) or operating the select button up or down.

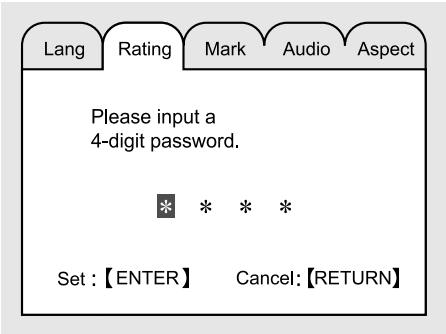

2. Press the ENTER button.
   If the password is confirmed, the password change mode is displayed.

NOTE
The setting cannot be changed without the correct password. Note down the password so you don't forget it.

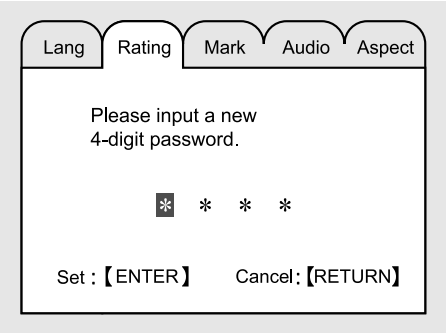

3. Enter the new password by pressing the number keys (0 to 9) or operating the select button up or down.
4. Press the ENTER button to set the new password.

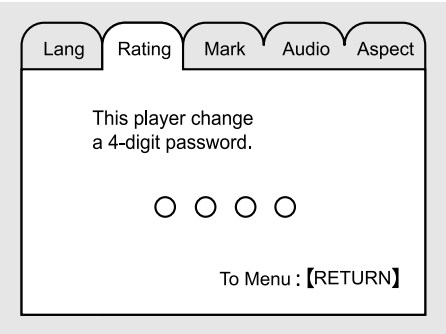

Mark

The DVD video playback status and angle display on/off, and priority of the inserted discs can be set.

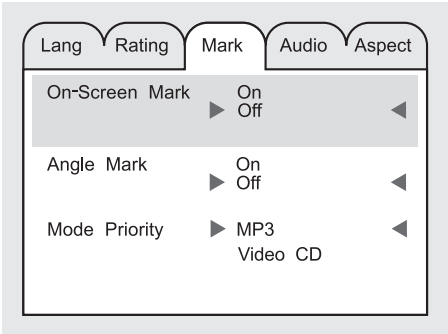

On-Screen Mark

Select ON to display, OFF not to display the DVD video playback status on the upper right corner of the screen.

When the screen display is on, the following marks are displayed on the upper right corner of the screen (in Disc mode).

Mark	Condition
▶	Playback
R	Stop (Resume standby)
❚❚	Pause
▶▶	Fast-forward
◀◀	Reverse

Angle display

The camera mark display when multi-angle can be performed.

NOTE

- *The display angle change is not available for discs other than multi-angle recorded DVD discs. Refer to the instruction manual accompanying the disc for details.*
- *The screen size and angle can be changed when On-Screen Mark and Angle Mark is off.*

Mode Priority

The priority of the inserted discs (CD-R/CD-RW) can be selected.

Audio

Digital Output

Not used with this unit.

Audio DRC

The audio dynamic range can be adjusted to reduce the difference between the maximum and minimum audio output. Audio compression of the DVD video playback can be selected or deselected during playback using the following modes:

Mode	Function
NONE	Playback with normal volume
LINE	Lower volume is increased to reduce difference in volume range.
RF	Use when it is still difficult to hear sound while using LINE. Sound quality is reduced while using RF.

NOTE

Only sound output from the headphones is available.

Auxiliary Input (AUX mode)

In AUX mode, AV equipment such as a video game player or a video camera can be used by connecting the image and sound cables to the auxiliary terminals.

NOTE

- *Before operating, read the instruction manual accompanying the AV equipment to be used.*
- *To listen to the Rear Entertainment System sound from the vehicle speakers, change the audio or navigation system sound to the Rear Entertainment System sound.*
  Refer to Sound on page 6-69.
  To listen to audio other than from the speakers of the rear entertainment system, it is necessary to use the wireless headphones that are included. For headphone specification, refer to "Operation Tips for Headphones" (page 6-59).
- *The cooling fan for this unit may activate if the temperature of the unit is high, however, this does not indicate a malfunction.*

▼Auxiliary Terminals and Power Outlet

The auxiliary terminals and power outlet are positioned as shown in the figure.

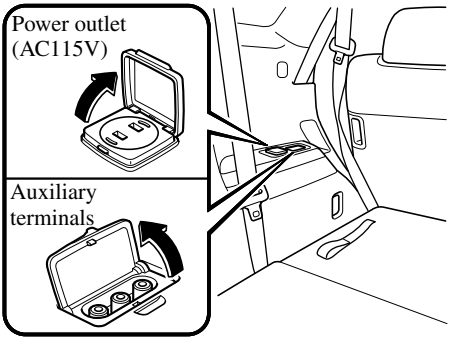

Auxiliary terminals

The auxiliary terminals consist of one image input terminal and two sound input terminals (for left and right).
Image input terminal: Yellow
Sound input (Right) terminal: Red
Sound input (Left) terminal: White
To use, open the cover.

CAUTION

Close the cover when the terminals are not in use. If foreign material penetrates, or liquid is spilled on it, it may cause a malfunction.

NOTE

- *For monaural equipment (with one sound output terminal), connect the terminal to the sound input terminal (White). The sound is output from the speaker to which the terminal has been connected.*
- *Noise may occur depending on the connected equipment.*

Power Outlet

The power outlet can be used as a power supply for electrical devices when the ignition switch is in the ACC or ON position.
Only use AC 115 V electrical appliances requiring no greater than 100 W
Open the cover to use the power outlet.

WARNING

- *Never use medical instruments with the power outlet.*
- *Follow the cautions below to prevent electrical shock.*
  - *Do not plug accessories into the power outlet or unplug them with wet hands.*
  - *Do not put anything other than plugs into the outlet.*
  - *Do not disassemble the outlet.*

CAUTION

- *Always close the cover when not in use. If foreign objects or liquid penetrate the outlet, it may cause a malfunction.*
- *Do not use electrical appliances that exceed the prescribed power capacity. It may cause a malfunction.*

NOTE

To prevent discharging of the battery, do not use the auxiliary input for long periods with the engine off or idling.

Plug-in

1. Open the cover.

2. Lightly insert the plug and turn the outlet 90 degrees, then insert it fully.

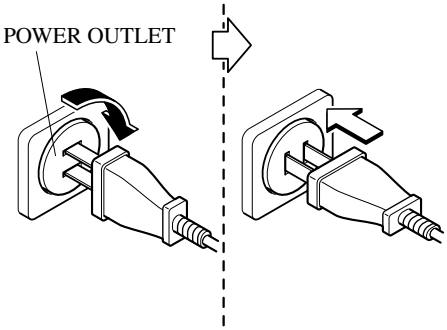

Unplug

1. Pull the plug out.
2. Close the cover.

NOTE

The following electrical appliances may not operate even if their electrical capacity is 100 W or less.

- *Appliances requiring large amounts of power for activation (such as cathode-ray tube televisions, refrigerators with a compressor, electrical pumps, and electrical tools)*
- *Appliances with a power supply frequency switch function (such as clocks and audio)*
- *Appliances for precise data processing (such as measurement equipment)*

Some electrical appliances other than the above may not operate.
The protection circuit may operate and the power supply may be stopped to prevent battery depletion.
When using an electrical appliance for data processing such as a personal computer, back up the data frequently.
The power outlet (AC115V) cannot be used in the following cases:

- *Battery power is weak*
- *Appliances with a capacity of 100 W or more are used*
- *Cabin temperature is extremely hot*

Noise may occur during radio or television operation depending on the electrical appliance being used.

▼Using AV Equipment

⚠ CAUTION

For safe driving, adjust the volume while driving so that ambient sound can be heard.

NOTE

Before operating, read the instruction manual accompanying the AV equipment to be used.

1. Turn the ignition switch to the LOCK position.
2. If a power supply is necessary, connect the outlet to the power outlet.
   Refer to Power outlet on page 6-88.
3. Connect the image cable and sound cables to the input terminals.

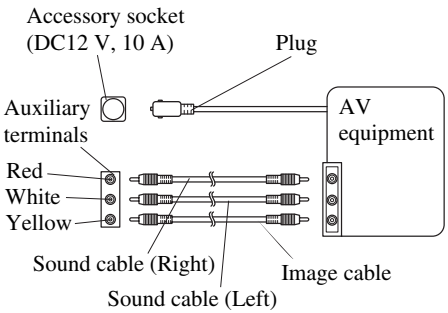

NOTE

- *For monaural equipment (with one sound output terminal), connect the terminal to either of the sound input terminals (Red) and (White). The sound is output from the speaker to which the terminal has been connected.*
- *Noise may occur depending on the connected equipment.*

4. Turn the ignition switch to the ACC or ON position.
5. Press the SOURCE button and select the AUX mode.
   Refer to Mode on page 6-73.

6. Operate the equipment following the instruction manual accompanying the equipment.

Language Code List

Language		Code
Abkhazian	ab	1001
Afar	aa	1000
Afrekaans	af	1005
Albanian	sq	2816
Amharic	am	1012
Arabic	ar	1017
Armenian	hy	1724
Assamase	as	1018
Aymara	ay	1024
Azerbaijani	az	1025
Bashkir	ba	1100
Basque	eu	1420
Bengali	bn	1113
Bhutani	dz	1325
Bihari	bh	1107
Bislama	bi	1108
Breton	br	1117
Bulgarian	bg	1106
Burmese	my	2224
Byelorussian	be	1104
Cambodian	km	2012
Catalan	ca	1200
Chinese	zh	3507
Corsican	co	1214
Croatian	hr	1717
Czech	cs	1218
Danish	da	1300
Dutch	nl	2311
English	en	1413
Esperanto	eo	1414
Estonian	et	1419
Faroese	fo	1514
Fiji	fj	1509
Finnish	fi	1508
French	fr	1517
Friesian	fy	1524
Galician	gl	1611
German	de	1304
Gorgian	ka	2000

Language		Code
Greek	el	1411
Greenlandic	kl	2011
Guarani	gn	1613
Gujarati	gu	1620
Hausa	ha	1700
Hebrew	iw	1822
Hindi	hi	1708
Hungarian	hu	1720
Icelandic	is	1818
Indonesian	in	1813
Interlingua	ia	1800
Interlingue	ie	1804
Inupiak	ik	1810
Irish	ga	1600
Italian	it	1819
Japanese	ja	1900
Javanese	jw	1922
Kannada	kn	2013
Kashmiri	ks	2018
Kazakh	kk	2010
Kinyarwanda	rw	2722
Kirghiz	ky	2024
Kirundi	rn	2713
Korean	ko	2014
Kurdish	ku	2020
Laothian	lo	2114
Latin	la	2100
Latvian	lv	2121
Lingala	ln	2113
Lithuanian	lt	2119
Macedonian	mk	2210
Malagasy	mg	2206
Malay	ms	2218
Malayalam	ml	2211
Maltese	mt	2219
Maori	mi	2208
Marathi	mr	2217
Moldavian	mo	2214
Mongolian	mn	2213

Language		Code
Nauru	na	2300
Nepali	ne	2304
Norwegian	no	2314
Occtian	oc	2402
Oriya	or	2417
Oromo	om	2412
Panjabi	pa	2500
Pashto, Pushto	ps	2518
Persian	fa	1500
Polish	pl	2511
Portuguese	pt	2519
Quechua	qu	2620
Rhaeto-Romance	rm	2712
Romanian	ro	2714
Russian	ru	2720
Samoan	sm	2812
Sangho	sg	2806
SanSkrit	sa	2800
Scots-Gaelic	gd	1603
Serbian	sr	2817
Serbo-Croatian	sh	2807
Sesotho	st	2819
Setswana	tn	2913
Shona	sn	2813
Sindhi	sd	2803
Singhalese	si	2808
Siswaiti	ss	2818
Slovak	sk	2810
Slovenian	sl	2811
Somali	so	2814
Spanish	es	1418
Sundanese	su	2820
Swahili	sw	2822
Swedish	sv	2821
Tagalog	tl	2911
Tajik	tg	2906
Tamil	ta	2900
Tatar	tt	2919
Telugu	te	2904
Thai	th	2907
Tibetan	bo	1114

Language		Code
Tigrinya	ti	2908
Tonga	to	2914
Tsonga	ts	2918
Tukmen	tk	2910
Turkish	tr	2917
Twi	tw	2922
Ukrainian	uk	3010
Urdu	ur	3017
Uzbek	uz	3025
Vietnamese	vi	3108
Volapuk	vo	3114
Welsh	cy	1224
Wolof	wo	3214
Xhosa	xh	3307
Yiddish	ji	1908
Yoruba	yo	3414
Zulu	zu	3520

Country Code List

Country		Code
Afghanistan	AF	1005
Albania	AL	1011
Algeria	DZ	1325
American Samoa	AS	1018
Andorra	AD	1003
Angola	AO	1014
Anguilla	AI	1008
Antarctica	AQ	1016
Antigua and Barbuda	AG	1006
Argentina	AR	1017
Armenia	AM	1012
Aruba	AW	1022
Australia	AU	1020
Austria	AT	1019
Azerbaijan	AZ	1025
Bahamas	BS	1118
Bahrain	BH	1107
Bangladesh	BD	1103
Barbados	BB	1101
Belarus	BY	1124
Belgium	BE	1104
Belize	BZ	1125
Benin	BJ	1109
Bermuda	BM	1112
Bhutan	BT	1119
Bolivia	BO	1114
Bosnia and Herzegovina	BA	1100
Botswana	BW	1122
Bouvet Island	BV	1121
Brazil	BR	1117
British Indian Ocean Territory	IO	1814
Brunei	BN	1113
Bulgaria	BG	1106
Burkina Faso	BF	1105
Burundi	BI	1108
Cambodia	KH	2007
Cameroon	CM	1212
Canada	CA	1200

Country		Code
Cape Verde	CV	1221
Cayman Islands	KY	2024
Central African Republic	CF	1205
Chad	TD	2903
Chile	CL	1211
China	CN	1213
Christmas Island	CX	1223
Cocos (Keeling) Islands	CC	1202
Colombia	CO	1214
Comoros	KM	2012
Congo	CG	1206
Congo,The Democratic Republic of the	CD	1203
Cook Islands	CK	1210
Costa Rica	CR	1217
Cote D'Ivoire	CI	1208
Croatia (Hrvatska)	HR	1717
Cuba	CU	1220
Cyprus	CY	1224
Czech Republic	CZ	1225
Denmark	DK	1310
Djibouti	DJ	1309
Dominica	DM	1312
Dominican Republic	DO	1314
East Timor	TP	2915
Ecuador	EC	1402
Egypt	EG	1406
El Salvador	SV	2821
Equatorial Guinea	GQ	1616
Eritrea	ER	1417
Estonia	EE	1404
Ethiopia	ET	1419
Falkland Islands (Malvinas)	FK	1510
Faroe Islands	FO	1514
Fiji	FJ	1509
Finland	FI	1508
France	FR	1517
French Guiana	GF	1605
French	PF	2505

Country		Code
French Southern Territories	TF	2905
Gabon	GA	1600
Gambia	GM	1612
Georgia	GE	1604
Germany	DE	1304
Ghana	GH	1607
Gibraltar	GI	1608
Greece	GR	1617
Greenland	GL	1611
Grenada	GD	1603
Guadeloupe	GP	1615
Guam	GU	1620
Guatemala	GT	1619
Guinea	GN	1613
Guinea-Bissau	GW	1622
Guyana	GY	1624
Haiti	HT	1719
Heard and McDonald Islands	HM	1712
Holy See (Vatican City State)	VA	3100
Honduras	HN	1713
Hong Kong	HK	1710
Hungary	HU	1720
Iceland	IS	1818
India	IN	1813
Indonesia	ID	1803
Iran, Islamic Republic of	IR	1817
Iraq	IQ	1816
Ireland	IE	1804
Israel	IL	1811
Italy	IT	1819
Jamaica	JM	1912
Japan	JP	1915
Jordan	JO	1914
Kazakstan	KZ	2025
Kenya	KE	2004
Kiribati	KI	2008
Korea (North), Democratic People's Republic	KP	2015
Korea (South), Republic of	KR	2017
Kuwait	KW	2022
Kyrgyzstan	KG	2006

Country		Code
Lao People's Democratic	LA	2100
Latvia	LV	2121
Lebanon	LB	2101
Lesotho	LS	2118
Liberia	LR	2117
Libyan Arab Jamahiriya	LY	2124
Liechtenstein	LI	2108
Lithuania	LT	2119
Luxembourg	LU	2120
Macau	MO	2214
Macedonia, the Former Yugoslav Republic of	MK	2210
Madagascar	MG	2206
Malawi	MW	2222
Malaysia	MY	2224
Maldives	MV	2221
Mali	ML	2211
Malta	MT	2219
Marshall Islands	MH	2207
Martinique	MQ	2216
Mauritania	MR	2217
Mauritius	MU	2220
Mayotte	YT	3419
Mexico	MX	2223
Micronesia, Federated States	FM	1512
Moldova, Republic	MD	2203
Monaco	MC	2202
Mongolia	MN	2213
Montserrat	MS	2218
Morocco	MA	2200
Mozambique	MZ	2225
Myanmar (Burma)	MM	2212
Namibia	NA	2300
Nauru	NR	2317
Nepal	NP	2315
Netherlands	NL	2311
Netherlands Antilles	AN	1013
New Caledonia	NC	2302
New Zealand	NZ	2325
Nicaragua	NI	2308
Niger	NE	2304

Country		Code
Nigeria	NG	2306
Niue	NU	2320
Norfolk Island	NF	2305
Northern Mariana Islands	MP	2215
Norway	NO	2314
Oman	OM	2412
Pakistan	PK	2510
Palau	PW	2522
Palestinian Territory, Occupied	PS	2518
Panama	PA	2500
Papua New Guinea	PG	2506
Paraguay	PY	2524
Peru	PE	2504
Philippines	PH	2507
Pitcairn	PN	2513
Poland	PL	2511
Portugal	PT	2519
Puerto Rico	PR	2517
Qatar	QA	2600
Reunion	RE	2704
Romania	RO	2714
Russian Federation	RU	2720
Rwanda	RW	2722
Saint Helena	SH	2807
Saint Kitts and	KN	2013
Saint Lucia	LC	2102
Saint Pierre and Miquelon	PM	2512
Saint Vincent and the Grenadines	VC	3102
Samoa	WS	3218
San Marino	SM	2812
Sao Tome and Principe	ST	2819
Saudi Arabia	SA	2800
Senegal	SN	2813
Seychelles	SC	2802
Sierra Leone	SL	2811
Singapore	SG	2806
Slovakia (Slovak Republic)	SK	2810
Slovenia	SI	2808
Solomon Islands	SB	2801
Somalia	SO	2814

Country		Code
South Africa	ZA	3500
South Georgia and the South Sandwich Islands	GS	1618
Spain	ES	1418
Sri Lanka	LK	2110
Sudan	SD	2803
Suriname	SR	2817
Svalbard and Jan Mayen Islands	SJ	2809
Swaziland	SZ	2825
Sweden	SE	2804
Switzerland	CH	1207
Syrian Arab Republic	SY	2824
Taiwan, Province of China	TW	2922
Tajikistan	TJ	2909
Tanzania,United Republic	TZ	2925
Thailand	TH	2907
Togo	TG	2906
Tokelau	TK	2910
Tonga	TO	2914
Trinidad and Tobago	TT	2919
Tunisia	TN	2913
Turkey	TR	2917
Turkmenistan	TM	2912
Turks and Caicos Islands	TC	2902
Tuvalu	TV	2921
Uganda	UG	3006
Ukraine	UA	3000
United Arab Emirates	AE	1004
United Kingdom	GB	1601
United States	US	3018
United States Minor Outlying Islands	UM	3012
Uruguay	UY	3024
Uzbekistan	UZ	3025
Vanuatu	VU	3120
Vatican City State See Holy See	VA	3100
Venezuela	VE	3104
Viet Nam	VN	3113
Virgin Islands, British	VG	3106
Virgin Islands, U.S.	VI	3108

Country		Code
Wallis and Futuna Islands	WF	3205
Western Sahara	EH	1407
Yemen	YE	3404
Yugoslavia	YU	3420
Zaire See Congo, The Democratic Republic of the	ZR	3517
Zambia	ZM	3512
Zimbabwe	ZW	3522

Error Message

▼Message

Disc mode error message

Use of Non-supported Disc
An error message is displayed if a non-supported DVD-ROM disc, a non-supported disc format or a disc (PAL, other) with a different image signal encoding is read.

If the disc content cannot be read:

An error message is displayed if the disc cannot be read due to scratches or the content cannot be read.

Incorrect region code

An error message is displayed if a disc other than one with region code 1 or including region 1 is inserted.

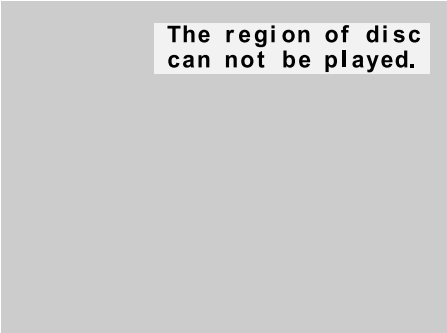

High temperature malfunction

If the temperature surrounding the DVD player area exceeds 88°C (190°F), the DVD player operation is stopped to protect the unit. When the temperature decreases to 70°C (158°F) or less, the protective circuit function is cleared and the operation is restored.

System errors (Common to each mode)

Power malfunction

An error message is displayed if the power supply to the rear entertainment system drops (About 9.5 V or less), and the power is turned off.
The power is restored when the power supply to the rear entertainment system is 10 V or more.

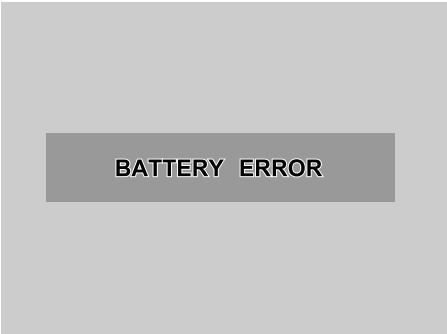

High temperature malfunction

If the temperature around the LCD area exceeds 95°C (203°F), the power supply is turned off to protect the LCD.
When the temperature around the LCD area is 85°C (185°F) or less, the protective circuit function is cleared and the operation is restored.

Symptoms and Actions

If any malfunction is suspected, verify the following before requesting a repair.
If the problem cannot be solved after performing the procedure, have the system inspected at an Authorized Mazda Dealer.
Some functions are not available depending on the disc. Read the instruction manual attached to the disc before operating.

Symptom	Cause	Action
System cannot be turned on	The ignition switch is in the LOCK position.	Turn the ignition switch to the ACC or ON position.
	The remote controller batteries are weak.	Replace the batteries with new ones. Refer to Remote Controller on page 6-67.
	Remote controller batteries poles are pointed in the wrong direction.	Install the batteries in the correct direction. Refer to Remote Controller on page 6-67.
	The vehicle battery is weak.	Recharge or replace the vehicle battery.
	The cabin temperature (Rear Entertainment System unit temperature) is high.	Retry after the temperature has lowered.
Image cannot be displayed	The ignition switch is in the LOCK position.	Turn the ignition switch to the ACC or ON position.
	No disc is inserted.	Insert a disc.
	An invalid disc is inserted.	Insert a disc which can be played by this unit. Refer to Operating Tips for Discs on page 6-52.
	The wrong mode has been selected.	Select the correct mode by pressing the SOURCE button. Refer to Mode on page 6-73.
Disc cannot be played	No disc is inserted.	Insert a disc.
	Disc is inserted upside down.	Insert the disc with the label-side up.
	Parent lock level is set.	Clear or change the parent lock level.
Sound cannot be output	The ignition switch is in the LOCK position.	Turn the ignition switch to the ACC or ON position.
	Volume is too low.	Adjust the volume.
	The audio unit/navigation system is not set in the Rear Entertainment System mode.	Set the audio unit/navigation system in the Rear Entertainment System mode. Refer to Sound Output on page 6-69.
	An invalid disc has been inserted.	Insert a disc which can be played by this unit. Refer to Operating Tips for Discs on page 6-52.
	No disc is inserted.	Insert a disc.
	Disc is inserted upside down.	Insert the disc with the label-side up.
	Playback has been paused.	Cancel the pause.
	The playback is in slow, fast-forward, or reverse mode.	Select normal playback. Refer to Basic operation on page 6-74.

Symptom	Cause	Action
Audio output from vehicle speakers but not from headphones	DTS format language is selected and played back. (The wireless headphones cannot play-back DTS format language)	Select audio other than DTS format.
Image and/or sound is distorted.	The disc is dirty.	Clean the signal surface of the disc.
	The disc has a scratch.	Replace the disc with another one.
	Dew condensation on the disc	Clear the dew condensation.
There are subtle spots or luminescent spots on the screen.	The LCD is high tech equipment with a 99.99% effective sensor resolution. However, please be aware that 0.01% pixel failure or pixel continuous illuminated pixels may exist.	—
Subtitles cannot be changed	Other languages are not recorded on the disc.	Check the available language in the instruction manual accompanying the disc.
Display angle cannot be changed	Multiple angles are not recorded on the disc.	Check the available angle in the instruction manual accompanying the disc.
Remote controller is inoperable	The remote controller is not pointed toward the receiver on the unit.	Point the remote controller toward the receiver on the unit. The receiver is near the disc slot.
	There is an obstruction between the remote controller and the unit.	Operate the remote controller avoiding the obstruction so that the signal reaches the receiver on the unit. The receiver is near the disc slot.
	The remote controller batteries are weak.	Replace the batteries with new ones. Refer to Remote Controller on page 6-67.
	Remote controller batteries poles are pointed in the wrong direction.	Install the batteries in the correct direction. Refer to Remote Controller on page 6-67.
No audio output from the headphones.	No power to the headphones.	Turn on the power to the headphones.
	The headphones' optical receiver is not pointed towards the main unit's transmitter.	Point the headphones' optical receiver towards the main unit's transmitter. The main unit's transmitter is located near the disc insertion area.
	There is an obstruction between the headphones and the main unit.	Avoid the obstruction.
	The headphones' batteries are depleted.	Replace the batteries with new ones.
	The headphones' batteries have not been correctly inserted in the + /− directions.	Insert the batteries correctly.
	The headphones are exposed to direct sunlight.	Use the headphones while avoiding direct sunlight.
	Power turns off automatically.	If there is no sound for 3 minutes or longer, or if the headphones are continuously used for 4 hours, there is a function which automatically turns the power off. Turn the power to headphones back on.

Symptom	Cause	Action
The headphones' optical reception range is too narrow.	The headphones' batteries are weak.	Replace the batteries with new ones.
There is excessive noise in the headphone audio	The headphones' batteries are weak.	Replace the batteries with new ones.

Bluetooth Hands-Free*

▼What is a Bluetooth Hands-Free?

Bluetooth Hands-Free Outline

By connecting a Bluetooth equipped mobile telephone to the hands-free unit equipped on the vehicle, making and receiving calls are possible using the phone button located on the steering wheel and voice commands.

Bluetooth equipped mobile telephone

A Bluetooth equipped mobile telephone communicates with the hands-free unit equipped on the vehicle using radio transmission (Bluetooth).
For example, if the mobile telephone is placed in a coat pocket, the phone calls can be made through your mobile service without direct use of the mobile telephone.

Applicable Bluetooth specification
Ver. 1.1 or higher

Response profile
- HFP (Hands Free Profile) Ver.1.0
- DUN (Dial-up Networking Profile) Ver.1.1

Bluetooth is the registered trademark of Bluetooth SIG. Inc.

NOTE
- *If the ignition switch is turned off during a hands-free call, the line is transferred to the mobile telephone automatically.*
- *If the mobile telephone is in a location where radio reception is difficult such as a metal container or in the trunk, the call may not be connected using Bluetooth. If communication is not possible, change the location of the mobile telephone.*

▼Component parts

The Bluetooth Hands-Free consists of the following parts:
- Phone button
- Information display
- Microphone
- Audio unit/Navigation system

Phone button

Basic functions of the Bluetooth Hands-Free can be used such as making calls or hanging up by operating the phone button.

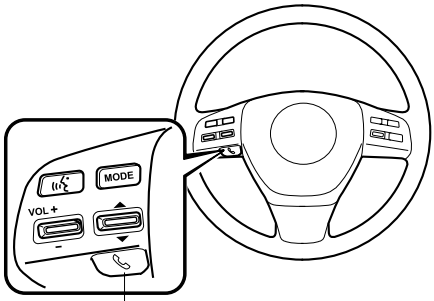

Phone button operations

A short press or a long press of the phone button is used depending on the operation status as follows:
- Short press (Press the button less than 0.7 sec.)
- Long press (Press the button 0.7 sec. or more.)

Information display

Telephone numbers, Bluetooth Hands-Free messages, and operation status are displayed.

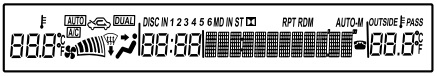

Microphone

The microphone is used for inputting voice commands or exchanging conversation.

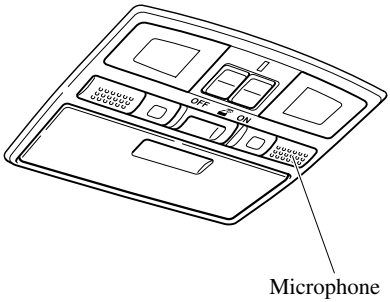

Audio unit/Navigation system

The audio unit or navigation system is used for adjusting the volume.

If the Bluetooth Hands-Free is operated, information such as radio wave reception conditions of the Bluetooth Hands-Free are displayed on the screen. (With navigation system)

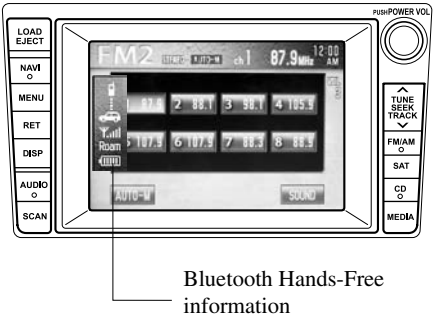

▼Voice

To prevent the deterioration in voice recognition rate and voice quality, the following points must be observed:

- It is not necessary to face the microphone or approach it. Call out the voice commands while maintaining a safe driving position.

- Close the windows and/or the moonroof to shut out loud noises from outside the vehicle, or turn down the airflow of the climate control system while the Bluetooth Hands-Free is being used. Voice recognition may not function correctly or voice quality may deteriorate under the following conditions.
  - A passenger is speaking.
  - Driving with the window and/or the moonroof open.
  - Driving on bumpy roads.
  - Noise outside of the vehicle is loud. (Construction sites, inside tunnels, excess oncoming traffic, or heavy rain.)
  - Operation noise from turn signals, wipers, or the horn is heard.
  - A/C airflow is strong or wind is blowing on the microphone.
  - There is noise coming from cargo loaded inside of the vehicle.
- Voice commands may not be recognized depending on the voice. If the voice commands are not recognized correctly, repeat the commands in a louder voice.
- Dialects or different wording other than hands-free prompts cannot be recognized by voice recognition. Call out in the wording specified by the voice commands.

Please be aware that the voice recognition may error despite following the above points.

▼Function restrictions while using Bluetooth Hands-Free

Functions are limited as follows while the Bluetooth Hands-Free is being used.

- Beep sound and voice guidance related to the audio unit and navigation system are not heard.
- Beep sound related to the A/C operation is not heard.
- The VOICE switch of the navigation system located on the steering wheel cannot be used.

▼How to use this section

Descriptions in the text are as follows:
Say: Voice commands to be called out by you.
Prompt: Voice guidance output from the speaker.
A beep sound [Beep] is output from the speaker. Call out after the beep sound is heard.
Example)
Say: [Beep] “Dial”
Prompt: “Number, please”
Say: [Beep] “XXXXXXXXXXX (Ex. “555-1234”) (Telephone number)”

Basic Bluetooth Hands-Free Operation

▼Bluetooth Hands-Free preparation

Language setting

1. Press the phone button (Short press).
2. **Say**: [Beep] “Setup”
3. **Prompt**: “Select one of the following: Pairing options, confirmation prompts, select phone, language, or passcode, or say “cancel” to return to the main menu.”
4. **Say**: [Beep] “Language”
5. **Prompt**: “Select a language: English, French, or Spanish.”
6. **Say**: [Beep] “French” (Call out the desired language: “English”, “French” or “Spanish”)
7. **Prompt**: “French (Desired language) selected. Is this correct?”
8. **Say**: [Beep] “Yes”
9. **Prompt**: “French (Desired language) selected, returning to main menu.”

Mobile telephone programming (Pairing)

To use a Bluetooth Hands-Free, the phone has to be programmed to the hands-free unit using the following procedure.
Up to seven Bluetooth equipped mobile telephones can be programmed to your vehicle.

NOTE

- *A mobile telephone can be programmed only when the vehicle is parked.*
- *Since the communication range of a Bluetooth equipped mobile telephone is about 10 meters (32 ft), if a mobile telephone is placed within a 10-meter (32 ft) radius of the vehicle, it may be detected/programmed unintentionally while another telephone is being programmed.*

1. Activate the Bluetooth application of the mobile telephone.

NOTE

For the operation of the mobile telephone, refer to its instruction manual.

2. Press the phone button (Short press).
3. **Say**: [Beep] “Setup”
4. **Prompt**: “Select one of the following: Pairing options, confirmation prompts, select phone, language, or passcode, or say “cancel” to return to the main menu.”
5. **Say**: [Beep] “Pairing options”
6. **Prompt**: “Do you want to pair a phone, delete a phone, or list paired phones?”
7. **Say**: [Beep] “Pair a phone”
8. **Prompt**: “Please say a 4-digit pairing code.”
9. **Say**: [Beep] “XXXX” (Call out an arbitrary 4-digit pairing code. This can be any combination of 4 numbers.)

NOTE

Record the code as it will be used to program your phone in Step 16.

10. **Prompt**: “Pairing code XXXX (4-digit number). Is this correct?”

11. **Say**: [Beep] “Yes” or “No”
12. If “Yes”, go to Step 13.
    If “No”, the procedure returns to Step 8.
13. **Prompt**: “Start pairing procedure on phone. See phone's manual for instructions.”
14. Using the mobile telephone, perform a search for the Bluetooth device (Peripheral device).

NOTE
For the operation of the mobile telephone, refer to its instruction manual.

15. Select “Mazda” from the device list searched by the mobile phone.
16. Input the 4-digit pairing code set in Step 9 to the mobile telephone.
17. **Prompt**: “Please say the name of the phone after the beep.”
18. **Say**: [Beep] “XXXX - - -” (Call out a “phone tag”, an arbitrary name for the phone.)
    Example: “Stan's phone.”

NOTE
Call out a programmed “phone tag” within 10 seconds.
If more than two mobile telephones are to be programmed, they cannot be programmed with the same or similar “phone tag”.

19. **Prompt**: “Adding XXXXXX - - - (Ex. “Mary's phone”) (Phone tag). Is this correct?”
20. **Say**: [Beep] “Yes”
21. **Prompt**: “Assign a priority for this phone between 1 and 7, where 1 is the phone used most often.”
22. **Say**: [Beep] “1” (Call out a number of the desired priority from 1 to 7.)

NOTE
- *Normally, “1” is to be input (Highest priority).*
- *If more than two mobile telephones are registered, input the priority order from 1 to 7.*

23. **Prompt**: “XXXXXX - - - (Ex. “Mary's phone”) (Phone tag) set to priority X (Priority number). Is this correct?”
24. **Say**: [Beep] “Yes”
25. **Prompt**: “Pairing complete”

After a mobile telephone is registered, the system automatically identifies the phone. By pressing the phone button again, or by pressing the phone button first after turning the ignition switch from the LOCK to the ACC position, the system reads out a voice guidance “XXXXXX - - - (Ex. “Mary's phone”) (Phone tag) is connected”. If two or more telephones are registered, the one with the highest priority is selected.

▼Making a call using a telephone number

1. Press the phone button (Short press).
2. **Say**: [Beep] “Dial”
3. **Prompt**: “Number, please”
4. **Say**: [Beep] “XXXXXXXXXXX (Ex. “555-1234”) (Telephone number)”
5. **Prompt**: “Dialing XXXXXXXXXXX (Ex. “555-1234”) (Telephone number) is this correct?”
6. **Say**: [Beep] “Yes” or “No”.

7. When “Yes” is called out, the call is made.
   When “No” is called out, the procedure returns to Step 3.

▼Receiving an incoming call

1. **Prompt**: Incoming call, press the phone button to answer.
2. To accept the call, press the phone button (Short press).
   To reject the call, press the phone button (Long press).

▼Hanging up a call

Press the phone button during the call (Long press).
Beep will confirm call is ended.

▼Volume adjustment

Turn the power/volume dial of the audio unit or navigation system to adjust the volume.
Turn the power/volume dial to the right to increase volume, to the left to decrease it.

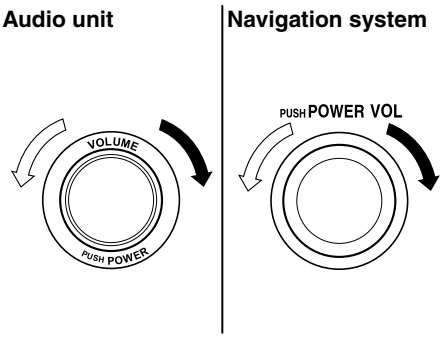

NOTE
The volume can also be adjusted using the volume button on the steering wheel.

▼Help function use

The help function informs the user of all the available voice commands under the current conditions.

1. Press the phone button (Short press).
2. **Say**: [Beep] “Help”
3. Follow prompts to get the appropriate voice guidance.

Convenient Use of the Hands-Free System

▼Phone book usage

Phone book registration

Phone numbers can be registered to the Bluetooth Hands-Free phone book.

1. Press the phone button (Short press).
2. **Say:** [Beep] “Phone book”
3. **Prompt:** “Select one of the following: new entry, edit, list names, delete or erase all..., or say “cancel” to return to main menu.”
4. **Say:** [Beep] “New entry”
5. **Prompt:** “Name please.”
6. **Say:** [Beep] “XXXXX... (Ex. “Mary's phone”)” (Say a voice tag for the name registered.)
7. **Prompt:** “Adding XXXXX... (Ex. “Mary's phone”) (Registered voice tag). Is this correct?”
8. **Say:** [Beep] “Yes”
9. **Prompt:** “Home, Work, Mobile, or Pager?”
10. **Say:** [Beep] “Mobile” (Say “Home”, “Work”, “Mobile”, or “Pager”, for the desired location to be registered.)
11. **Prompt:** “Mobile” (Location to be registered). Is this correct?
12. **Say:** [Beep] “Yes”
13. **Prompt:** “Number, please.”
14. **Say:** [Beep] “XXXXXXXXXXX (Ex. “555-1234”)” (Say the phone number to be registered.)
15. **Prompt:** “XXXXXXXXXXX (Ex. “555-1234”) (Phone number registration). Is this correct? ”
16. **Say:** [Beep] “Yes”
17. **Prompt:** “Number saved. Would you like to add another number for this entry?”
18. **Say:** [Beep] “Yes” or “No”.
19. If “Yes”, an additional phone number registration can be made for the same entry.
    If “No”, the procedure proceeds to Step 20.
20. **Prompt:** “Returning to main menu.”

Making calls using the phone book

Telephone calls can be made by saying the name of a person (voice tag) whose phone number has been registered in the Bluetooth Hands-Free system in advance. For the phone book setting method, refer to (page 6-111).

1. Press the phone button (Short press).
2. **Say:** [Beep] “Call”
3. **Prompt:** “Name please.”
4. **Say:** [Beep] “XXXXX... (Ex. “John's phone”)” (Say a voice tag registered in the phone book.)
5. **Prompt:** “Calling XXXXX... (Ex. “John's phone”) XXXX (Ex. “at home”). Is this correct?” (Voice tag and phone number location registered in phone book).
6. **Say:** [Beep] “Yes”
7. **Prompt:** “Dialing”

▼Redialing function

Redialing the number of the person previously dialed is possible.

1. Press the phone button (Short press).
2. **Say:** [Beep] “Redial”
3. **Prompt:** “Dialing”

▼Emergency calls

A call can be made to the emergency phone number (911) using the voice input command.

1. Press the phone button (Short press).
2. **Say:** [Beep] “Emergency”
3. **Prompt:** “Calling “911”, is this correct?”
4. **Say:** [Beep] “Yes”
5. **Prompt:** “Dialing”

▼Refusing an incoming call

For incoming call refusal, refer to “Receiving an incoming call” (page 6-108).

▼Mute

The microphone can be muted during a call.

1. Press the phone button (Short press).
2. **Say:** [Beep] “Mute”
3. **Prompt:** “Microphone muted”

Canceling mute

1. Press the phone button (Short press).
2. **Say:** [Beep] “Mute off”
3. **Prompt:** “Microphone unmuted”

▼Transferring a call

Transferring a call from the Hands-Free system to a mobile phone

Communication between the hands-free unit and a mobile phone is canceled, and the line can be switched to a standard call using a mobile phone.

1. Press the phone button (Short press).
2. **Say:** [Beep] “Transfer call”
3. **Prompt:** “Transferred call to phone”

Transferring a call from a mobile phone to the Hands-Free system

Communication between mobile phones can be switched to the Bluetooth Hands-Free system.

1. Press the phone button (Short press).
2. **Say:** [Beep] “Transfer call”
3. **Prompt:** “Transferred call to Hands Free system”

Call waiting

A call can be interrupted to receive and incoming call from a third party.

Call interrupt

A call can be switched to a new incoming call.

- Press the phone button (Short press).

NOTE

- *To refuse an incoming call, press the phone button (Long press).*
- *After receiving a new incoming call, the previous call is placed on hold.*

Switching calls

Switching back to the previous call can also be done.

- Press the phone button (Short press).

Ending the current call

- Press the phone button during the call (Long press).

▼Voice guidance interrupt operation

Voice guidance can be stopped by pressing the phone button (Short press) while it is being heard. A new voice input command can then be called out by the user.

· Press the phone button (Short press).

▼Phone book settings

Editing phone book

The data registered to the Bluetooth Hands-Free phone book can be edited.

1. Press the phone button (Short press).
2. **Say:** [Beep] “Phone book”
3. **Prompt:** “Select one of the following: new entry, edit, list names, delete or erase all..., or say “cancel” to return to main menu.”
4. **Say:** [Beep] “Edit”
5. **Prompt:** “Please say the name of the entry you would like to edit, or say “List names”..., or say “cancel” to return to main menu.”
6. **Say:** [Beep] “XXXXX... (Ex. “Mary's phone”)” (Say the voice tag for the registered name to be edited in the phone book.)
7. **Prompt:** “Home, Work, Mobile, or Pager?”
8. **Say:** [Beep] “Home” (Say the registered location to be edited: “Home”, “Work”, “Mobile”, or “Pager”).
9. **Prompt:** “XXXXX... (Ex. “Mary's phone”) (Registered voice tag) XXXX (Ex. “home”) (Registered location). Is this correct?”
10. **Say:** [Beep] “Yes”
11. **Prompt:** “The current number is XXXXXXXXXXX (Ex. “555-1234”) (Currently registered number). New number, please.”

NOTE

If there was no previous phone number registered to a location (Ex. “Work”), the prompt will only read out “Number, please”.

12. **Say:** [Beep] “XXXXXXXXXXX (Ex. “555-1234”)” (Say the new phone number to be registered.)
13. **Prompt:** “XXXXXXXXXXX (Ex. “555-1234”) (The new phone number to be registered). Is this correct?”
14. **Say:** [Beep] “Yes”
15. **Prompt:** “Number changed. Would you like to call this number, edit another entry..., or say “cancel” to return to main menu.”

Phone book data deletion

Erasing individual phone book data

Individual data registered to the Bluetooth Hands-Free phone book can be cleared.

1. Press the phone button (Short press).
2. **Say:** [Beep] “Phone book”
3. **Prompt:** “Select one of the following: new entry, edit, list names, delete or erase all..., or say “cancel” to return to main menu.”
4. **Say:** [Beep] “Delete”

5. **Prompt:** “Please say the name of the entry you would like to delete, or say “List names”..., or say “cancel” to return to main menu.”
6. **Say:** [Beep] “XXXXX... (Ex. “John's phone”)” (Say the registered voice tag to be deleted from the phone book.)
7. **Prompt:** “Deleting XXXXX... (Ex. “John's phone”) (Registered voice tag) Home (Registered location). Is this correct?”
8. **Say:** [Beep] “Yes”
9. **Prompt:** “XXXXX... (Ex. “John's phone”) (Registered voice tag) Home (Registered location) deleted, returning to main menu.”

Complete deletion of the phone book data

All data registered to the Bluetooth Hands-Free phone book can be erased.

1. Press the phone button (Short press).
2. **Say:** [Beep] “Phone book”
3. **Prompt:** “Select one of the following: new entry, edit, list names, delete or erase all..., or say “cancel” to return to main menu.”
4. **Say:** [Beep] “Erase all”
5. **Prompt:** “Are you sure you want to erase everything from your Hands Free system phone book?”
6. **Say:** [Beep] “Yes”
7. **Prompt:** “You are about to delete everything from your Hands Free system phone book. Do you want to continue?”
8. **Say:** [Beep] “Yes”
9. **Prompt:** “Please wait, erasing the Hands Free system phone book.”
10. **Prompt:** “Hands-Free system phone book erased, returning to main menu.”

Read-out of names registered to the Bluetooth Hands-Free phone book

The Bluetooth Hands-Free system can read out the list of names registered to its phone book.

1. Press the phone button (Short press).
2. **Say:** [Beep] “Phone book”
3. **Prompt:** “Select one of the following: new entry, edit, list names, delete or erase all..., or say “cancel” to return to main menu.”
4. **Say:** [Beep] “List names”
5. **Prompt:** “XXXXX..., XXXXX..., XXXXX... (Ex. “John's phone”, Mary's phone, Bill's phone)” (Voice guidance reads out the voice tags registered to the phone book.)

Press the phone button during the read-out at the desired name, and then say one of the following voice commands to execute it.

- “Continue”: Continues the voice guidance.
- “Call”: Calls the registered phone number.
- “Edit”: Edits the registered phone number.
- “Delete”: Deletes the registered phone number.
- “Previous”: Returns to the previous phone number.
- “Cancel”: Returns to main menu.

6. **Prompt:** “End of list, would you like to start from the beginning?”

7. **Say:** [Beep] “No”
8. **Prompt:** “Returning to main menu.”

Hands-Free Telephone Setting

▼Mobile phone

Mobile phone registration

For the registration of a Bluetooth equipped mobile telephone to the Bluetooth Hands-Free system, refer to “Bluetooth Hands-Free preparation” (page 6-106).

Registered mobile phone read-out

The Bluetooth Hands-Free system can read-out the mobile phones registered to its system.

1. Press the phone button (Short press).
2. **Say:** [Beep] “Setup”
3. **Prompt:** “Select one of the following: pairing options, confirmation prompts, select phone, language, or passcode..., or say “cancel” to return to main menu.”
4. **Say:** [Beep] “Pairing options”
5. **Prompt:** “Do you want to pair a phone, delete a phone, or list paired phones?”
6. **Say:** [Beep] “List phones”
7. **Prompt:** “XXXXX..., XXXXX..., XXXXX... (Ex. Phone A, phone B, phone C)” (The voice guidance reads out the phone tags registered to the phone book.)

Press the phone button during the read-out at the desired phone, and then say one of the following voice commands to execute it.

- “Select”: Registers the mobile phone when the phone button was pressed.

- “Continue”: Continues the voice guidance.
- “Delete”: Deletes the registered mobile phone.
- “Previous”: Returns to the previous mobile phone.

8. **Prompt:** “End of list, would you like to start from the beginning?”
9. **Say:** [Beep] “No”
10. **Prompt:** “Returning to main menu.”

Mobile phone selection

This function is for switching to a different mobile phone which has been registered beforehand. The selected mobile phone will remain in effect until the ignition switch is turned off.

1. Press the phone button (Short press).
2. **Say:** [Beep] “Setup”
3. **Prompt:** “Select one of the following: pairing options, confirmation prompts, select phone, language, or passcode..., or say “cancel” to return to main menu.”
4. **Say:** [Beep] “Select phone”
5. **Prompt:** “Please say 1 (priority 1) for XXXXX... (Ex. phone A), 2 (priority 2) for XXXXX... (Ex. phone B...)”
6. **Say:** [Beep] “2” (Say the priority number for the mobile phone to be used as first priority.)
7. **Prompt:** “XXXXX... (Ex. phone B...) (Registered phone tag) selected, is this correct?”
8. **Say:** [Beep] “Yes”
9. **Prompt:** “XXXXX... (Ex. phone B...) (Phone tag) will temporarily override phone priorities, returning to main menu.”

Registered mobile phone deletion

Registered mobile phones can be deleted individually or collectively.

1. Press the phone button (Short press).
2. **Say:** [Beep] “Setup”
3. **Prompt:** “Select one of the following: pairing options, confirmation prompts, select phone, language, or passcode..., or say “cancel” to return to main menu.”
4. **Say:** [Beep] “Pairing options”
5. **Prompt:** “Do you want to pair a phone, delete a phone, or list paired phones?”

NOTE
A registered mobile phone can be deleted using the registration list.

6. **Say:** [Beep] “Delete phone”
7. **Prompt:** “Please say 1 (priority 1) for XXXXX... (Ex. phone A), 2 (priority 2) for XXXXX... (Ex. phone B...)” (The voice guidance reads out each phone in the order of priority and the phone tag).
8. **Say:** [Beep] “2” (Say the order of priority of the mobile phone to be deleted.)

NOTE
Say “All” to delete all mobile phones.

9. **Prompt:** “Removing XXXXX... (Ex. phone B...) (Registered phone tag). Is this correct?”

10. **Say:** [Beep] “Yes”
11. **Prompt:** “Deleted”

▼Language setting

English, Spanish, and Canadian French are available. If the language setting is changed, all of the voice guidance and voice input commands are done in the selected language.

Method 1

Refer to Bluetooth Hands-Free preparation on page 6-106.

Method 2

1. Press the phone button (Short press).
2. **Say:** [Beep] “French” (Say the desired language: “English”, “French”, or “Spanish”.)
3. **Prompt:** “Would you like to change the language to French (Desired language) ?”
4. **Say:** [Beep] “Yes”
5. **Prompt:** “Please wait. Switching to French phone book. French selected, returning to main menu.”

▼Security setting

If a passcode is set, the system cannot be activated unless the passcode is input.

Passcode setting

1. Press the phone button (Short press).
2. **Say:** [Beep] “Setup”
3. **Prompt:**“Select one of the following: pairing options, confirmation prompts, select phone, language, or passcode..., or say “cancel” to return to main menu.”
4. **Say:** [Beep] “Passcode”
5. **Prompt:** “Passcode is disabled. Would you like to enable it?”
6. **Say:** [Beep] “Yes”
7. **Prompt:**“Please say a 4-digit passcode. Remember this passcode. It will be required to use this system.”
8. **Say:** [Beep] “XXXX” (Say a desired 4-digit passcode, “PCode”.)
9. **Prompt:**“Passcode XXXX (Passcode, PCode). Is this correct?”
10. **Say:** [Beep] “Yes”
11. **Prompt:**“Passcode is enabled, returning to main menu.”

Using the Bluetooth Hands-Free system with a passcode

1. Press the phone button (Short press).
2. **Prompt:**“Hands-Free system is locked. State the passcode to continue.”
3. **Say:** [Beep] “XXXX” (Say the set passcode “PCode”.)
4. If the correct passcode is input, voice guidance “XXXXXX... (Ex. “Mary's phone) (Phone tag) is connected” is announced.
   If the passcode is incorrect, voice guidance “XXXX (4-digit passcode, Pcode) incorrect passcode, please try again” is announced.

Canceling the passcode

1. Press the phone button (Short press).
2. **Say:** [Beep] “Setup”

3. **Prompt:** “Select one of the following: pairing options, confirmation prompts, select phone, language, or passcode..., or say “cancel” to return to main menu.”
4. **Say:** [Beep] “Passcode”
5. **Prompt:**“Passcode is enabled. Would you like to disable it?”
6. **Say:** [Beep] “Yes”
7. **Prompt:**“Passcode is disabled, returning to main menu.”

Confirmation Prompts

The confirmation prompt confirms the command content to the user before advancing to the operation requested by the user. When this function is turned on, the system reads out the voice input command previously received and confirms whether the command is correct before advancing to the command execution.
When the confirmation prompt function is turned on:
(Ex. “Calling John's phone. Is this correct?”)
When the confirmation prompt function is turned off:
(Ex. “Calling John's phone.”)

NOTE
If the confirmation prompt function is turned off when making an emergency call, the system reads out and confirms the command before executing it.

1. Press the phone button (Short press).
2. **Say:** [Beep] “Setup”
3. **Prompt:**“Select one of the following: pairing options, confirmation prompts, select phone, language, or passcode..., or say “cancel” to return to main menu.”
4. **Say:** [Beep] “Confirmation prompts”
5. **Prompt:**“Confirmation prompts are on/off. Would you like to turn confirmation prompts off/on?”
6. **Say:** [Beep] “Yes”
7. **Prompt:**“Confirmation prompts are off/on, returning to main menu.”

▼Voice recognition learning function (Speaker enrollment)

The voice recognition learning function enables voice recognition appropriate to the characteristics of the user's voice.
If the recognition of the voice input commands to the system is not adequate, this function can largely improve the system's voice recognition of the user. If your voice can be recognized sufficiently without using this function, you may not realize the added benefit of the function, as high-level voice recognition can be achieved by using this function.
To register your voice, the voice input command list must be read out. Read out the list when the vehicle is parked.
Perform the registration in as quite a place as possible (page 6-104).
The registration must be performed completely. The required time is about 10 to 15 minutes. The user needs to be seated in the driver's seat with the voice input command list for voice recognition learning open to the page indicated below.

1. Press the phone button (Short press).
2. **Say:** [Beep] “Voice training”

3. **Prompt:** “This operation must be performed in a quiet environment while the vehicle is stopped. See the owner's manual for the list of required training phrases. Press and release the phone button when you are ready to begin. Press and hold the phone button to cancel at any time.”
4. Press the phone button (Short press).
5. The voice guidance reads out the voice input command (refer to the voice input command list for voice recognition learning). (Ex. “Please read phrase 1”)
6. **Say:** [Beep] “#790” (Say the voice input command for voice recognition learning (1 to 45) according to the voice guidance.)
7. **Prompt:** “Speaker enrollment is complete, returning to main menu.”

Voice input command list for voice recognition learning

When reading out, the following points must be observed:

- Read out the numbers one at a time correctly and naturally.

(For example, “1234” must be read out “one, two, three, four”, not “twelve, thirty four”.)

- “#” Must be read out “Pound”.
- “∗ ” Must be read out “Star”.
- Do not read out parentheses. “ (” and hyphens “-” are used for separating numbers in a phone number.

Ex.

“ (888) 555-1212” must be called out “Eight, eight, eight, five, five, five, one, two, one, two.”

Explanation	Command
1	#790
2	∗ 671
3	212-4903
4	235-3494
5	315-5657
6	456-7930
7	793-5462
8	794-1826
9	826-3145
10	962-7305
11	(531) 742-9860
12	(632) 807-4591
13	(800) 222-5015
14	(888) 555-1212
15	0123456789
16	55 66 77 88 99
17	44 33 22 11 00
18	Call 293-5804
19	Call ∗ 350
20	Call 1 (234) 567-8901
21	Dial 639-1542
22	Dial #780
23	Dial (987) 654-3210
24	1058# 3794# Send
25	27643# 4321# Send
26	Cancel
27	Continue
28	Emergency
29	Erase All
30	Help
31	Home, Work, Mobile, Pager
32	List Names
33	No
34	Phonebook: Delete
35	Phonebook: New Entry
36	Previous
37	Phonebook: Erase All
38	Redial

Explanation	Command
39	Retrain
40	Setup Confirmation Prompts
41	Setup Language
42	Setup Pairing Options
43	Pair A Phone
44	Transfer Call
45	Yes

NOTE
After user voice registration is completed, voice guidance "Speaker enrollment is complete, returning to main menu" is announced.

▼DTMF (dial tone multi-frequency signal) transmission

This function is used when transmitting DTMF via the user's voice. The receiver of a DTMF transmission is generally a home telephone answering machine or a company's automated guidance call center (When you send tone signals back according to the voice guidance recording).

1. Press the phone button (Short press).
2. **Say:** [Beep] "Send XXXX..." (Say DTMF code)
3. **Prompt:** "Sending XXXX... (DTMF code)"

When the Bluetooth Hands-Free cannot be used

The Bluetooth Hands-Free cannot be used under the following conditions:

- Outside of the communication area.
- Mobile telephone has a malfunction.
- Mobile telephone is not connected to the hands-free unit equipped on the vehicle.
- The mobile telephone battery is weak.
- The mobile telephone is turned off.
- The mobile telephone is placed where radio reception is difficult.

Safety Certification

FCC ID: CB2MBLUEC07 IC:279B-MBLUEC07
This device complies with Part 15 of the FCC Rules and with RSS-210 of Industry Canada. Operation is subject to the following two conditions:
(1) This device may not cause harmful interference, and
(2) This device must accept any interference received, including interference that may cause undesired operation.

WARNING

Changes or modifications not expressively approved by the party responsible for compliance could void the user's authority to operate the equipment.

The term “IC: ” before the radio certification number only signifies that Industry Canada technical specifications were met.
The antenna used for this transmitter must not be co-located or operating in conjunction with any other antenna or transmitter. End-users and installers must be provided with installation instructions and transmitter operating conditions for satisfying RF exposure compliance.

Sunvisors

When you need a sunvisor, lower it for use in front or swing it to the side.

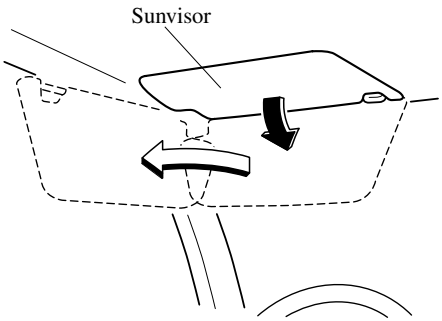

▼Side Extention Sunvisors

The visor extender extends the sunvisor's range of sun shading.
To use, pull it out.

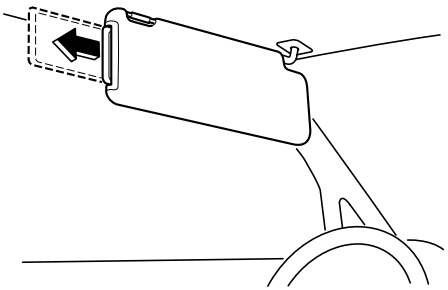

⚠ CAUTION

When moving the sunvisor, reinsert the visor extender, otherwise the visor extender could hit the rearview mirror.

▼Vanity Mirrors

To use the vanity mirror, lower the sunvisor.
The vanity mirror light will illuminate when you open the cover.

Interior Lights

▼Illuminated Entry System

When the illuminated entry system operates, the overhead light (switch is in the DOOR position) and the courtesy lights turn on for:

- About 30 seconds after the driver's door is unlocked and the ignition switch is in the LOCK position (with the ignition key removed).
- About 15 seconds after all doors are closed (If your vehicle is equipped with the advanced key, the overhead light turns on for about 5 seconds when the advanced key is outside of the vehicle).
- About 15 seconds after the ignition switch is in the LOCK position (with the ignition key removed) with all doors closed.

The light also turns off when:

- The ignition switch is turned to the ON position and all doors are closed.
- The driver's door is locked.

NOTE

Battery saver

If any door is left opened, the light goes out after about 30 minutes to save the battery. The light turns on again when the ignition switch is turned to the ON position, or when any door is opened after all doors have been closed.

▼Overhead Lights

When the center/rear overhead light switch is in the DOOR position, the center/rear overhead light can be turned on or off using the front overhead light switch.

Front

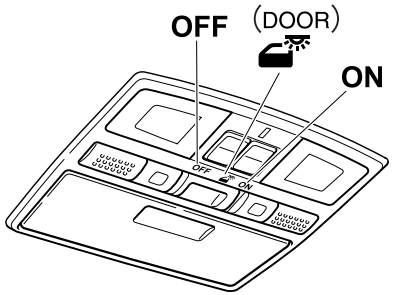

Switch Position	Overhead Lights
OFF	• Light off • All overhead lights are off when the center/rear overhead light switch is in the DOOR position
DOOR	• Light is on when any door is open • Light is on or off when the illuminated entry system is on
ON	• Light on • All overhead lights are on when the center/rear overhead light switch is in the DOOR position

Center/Rear

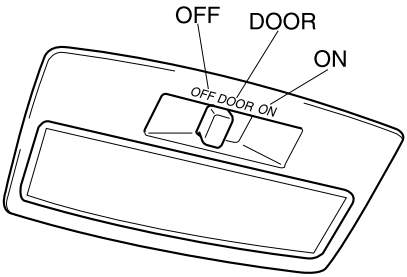

Switch Position	Overhead Lights
OFF	Light off
DOOR	Light on or off in accordance with the operation of front overhead light switch
ON	Light on

▼Map Lights

The map lights are switched on or off by pressing the switches.

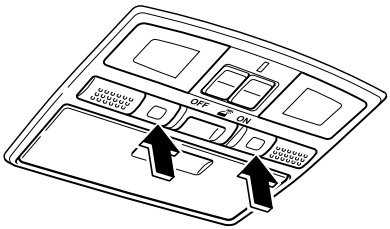

▼Luggage Compartment Light

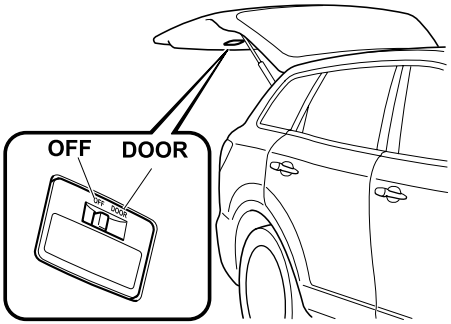

Switch Position	Luggage Compartment Light
OFF	Light off
DOOR	Light on when the liftgate is open

▼Courtesy Lights

Turns on when any door is open or the illuminated entry system is on.

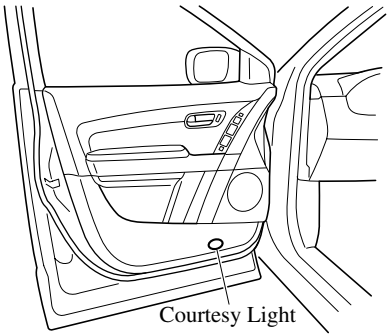

Information Display

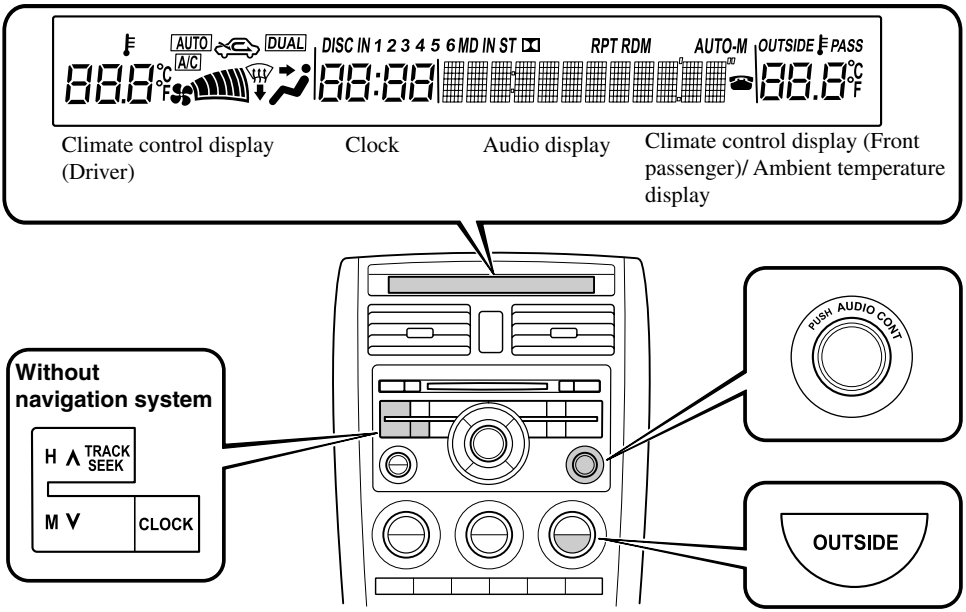

▼Information Display Functions

The information display has the following functions:

- Clock*
- Ambient Temperature Display (Outside Temperature Display)
- Climate Control Display
- Audio Display

*Some models.

▼Clock

NOTE
When the trip computer is displayed, press the CLOCK button to change the display to the time.

When the ignition switch is in the ACC or ON position, the time is displayed.

Without navigation system

Time setting

1. Press the CLOCK button until the beep sounds and the displayed time flashes.
2. Press the H switch to set the hour.
3. Press the M switch to set the minutes, then press the CLOCK button.

Switching between 12 and 24-hour clock time

1. Press the audio control dial several times until 12Hr and 24Hr clock time are displayed.
2. Turn the audio control dial in either direction, select the desired clock setting, and press the audio control dial. Press the dial while the preferred clock time is flashing.

With navigation system

Refer to the separate manual "NAVIGATION SYSTEM".

NOTE
Minutes and seconds are adjusted by the GPS, however, it is necessary to adjust hours under the following conditions:
- *Driving across different time zones*
- *Daylight saving time start and end*

▼Ambient Temperature Display

When the ignition switch is in the ON position, press the OUTSIDE switch (page 6-6) to display the ambient temperature.

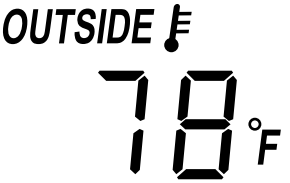

NOTE
- *Under the following conditions, the ambient temperature display may differ from the actual ambient temperature depending on the surroundings and vehicle conditions:*
  - *Significantly cold or hot temperatures.*
  - *Sudden changes in ambient temperature.*
  - *The vehicle is parked.*
  - *The vehicle is driven at low speeds.*
- *Press the OUTSIDE switch a few seconds or more to switch the display from Fahrenheit to Centigrade or vice versa.*
- *Press the OUTSIDE switch again to switch the display from ambient temperature to the temperature set for the air conditioner.*

▼Climate Control Display

The climate control system status is displayed. To operate the climate control system, refer to “Climate Control System” (page 6-2).

▼Audio Display

The audio system status is displayed. To operate the audio system, refer to “Audio System” (page 6-17).

Cup Holder

⚠ WARNING

Never use a cup holder to hold hot liquids while the vehicle is moving:

Using a cup holder to hold hot liquids while the vehicle is moving is dangerous. If the contents spill, you could be scalded.

Do not put anything other than cups or drink cans in cup holders:

Putting objects other than cups or drink cans in a cup holder is dangerous.
During sudden braking or maneuvering, occupants could be hit and injured, or objects could be thrown around the vehicle, causing interference with the driver and the possibility of an accident. Only use a cup holder for cups or drink cans.

⚠ CAUTION

To reduce the possibility of injury in an accident or a sudden stop, keep cup holders closed when not in use.

▼Front

To use the cup holder, push the release button.

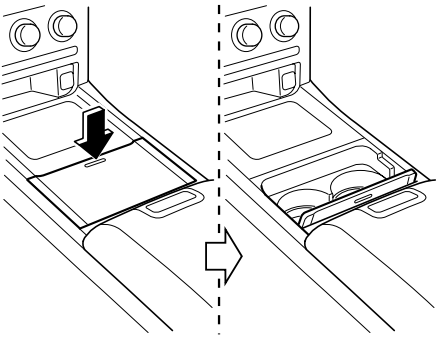

▼Rear

Second-row seat

Cup holders are located in the armrest.

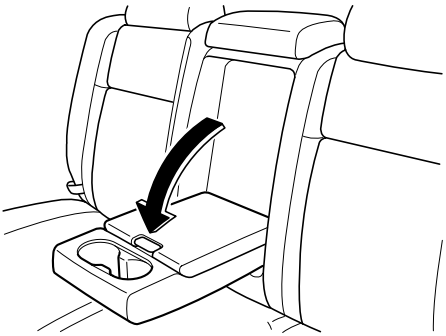

Third-row seat

Cup holders are located in the third-row seat side trims.

Right-side

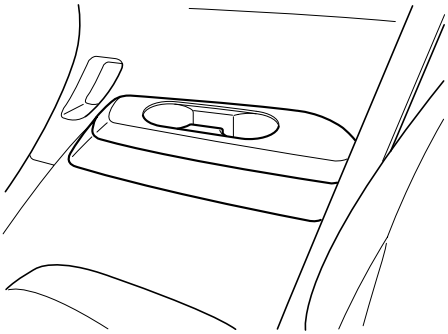

Left-side *

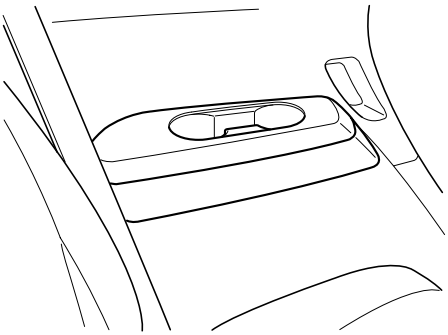

 *Some models.

Bottle Holder

Bottle holders are on the inside of the doors.

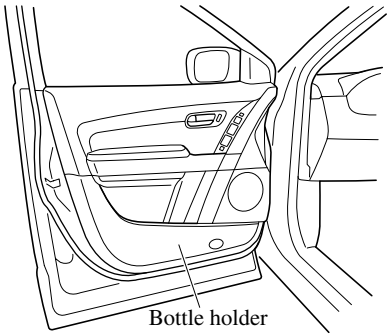

⚠ CAUTION

Do not use the bottle holders for containers without caps. The contents may spill when the door is opened or closed.

Storage Compartments

⚠ WARNING

Keep storage boxes closed when driving:

Driving with the storage boxes open is dangerous. To reduce the possibility of injury in an accident or a sudden stop, keep the storage boxes closed when driving.

⚠ CAUTION

Do not leave lighters or eyeglasses in the storage boxes while parked under the sun. A lighter could explode or the plastic material in eyeglasses could deform and crack from high temperature.

▼Overhead Console

This console box is designed to store accessories.
Push and release to open.

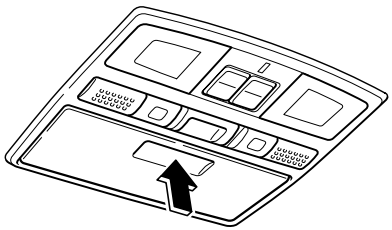

▼Coin Box

To open, press the release catch down and pull the lid downward.

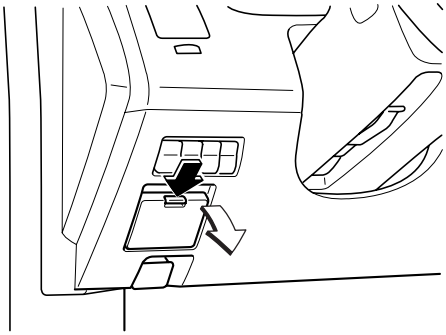

▼Glove Box

To open the glove box, pull the latch toward you.
Insert the key (auxiliary key*) and turn it clockwise to lock, counterclockwise to unlock.
* Advanced key equipped vehicle

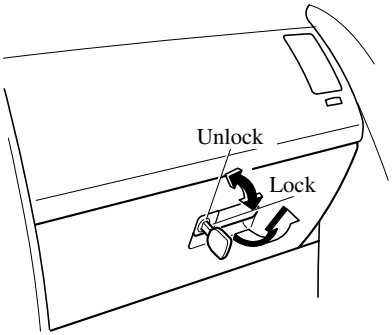

▼Center Console

To open, push the button.

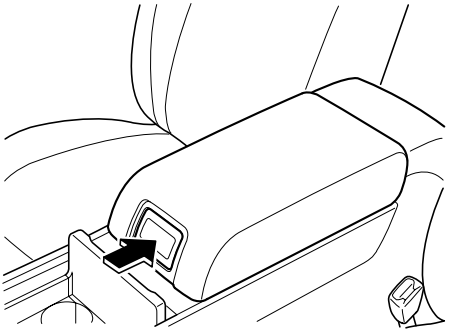

▼Armrest Box*

To open, pull the release catch.

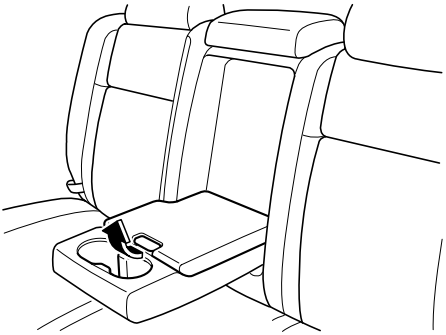

▼Cargo Securing Loops

⚠ WARNING

Make sure luggage and cargo is secured before driving:

Not securing cargo while driving is dangerous as it could move or be crushed during sudden braking or a collision and cause injury.

 *Some models.

Use the loops in the luggage compartment to secure cargo with a rope or net. The tensile strength of the loops is 196 N (20 kgf, 44 lbf). Do not apply excessive force to the loops as it will damage them.

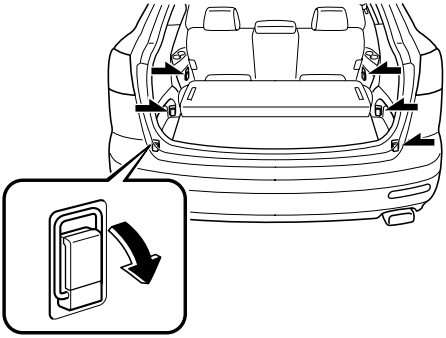

▼Cargo Sub-Compartment

Center cargo sub-compartment

1. Lift the trunk board.

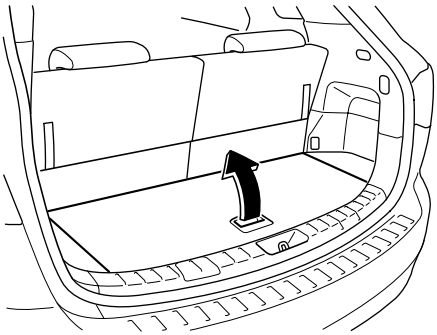

2. Secure the trunk board using the straps on the third-row seatbacks.

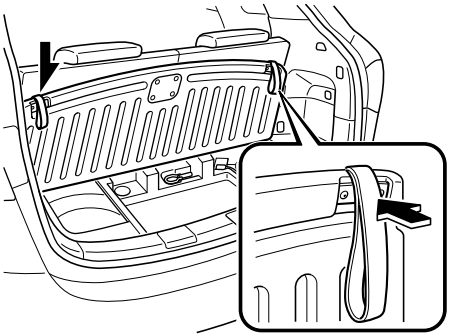

Side cargo sub-compartment

Pull the compartment's strap to open the cover.

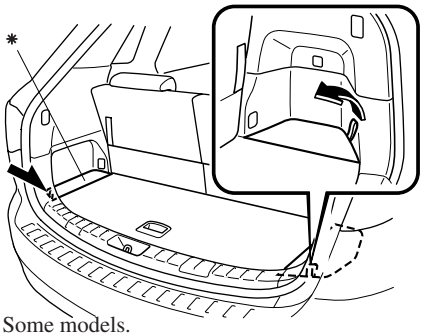

* Some models.

▼Shopping Bag Hook

The shopping bag hook can be used for hanging shopping bags.

⚠ CAUTION

Do not hang excessive weight on the shopping bag hook as it could be damaged.

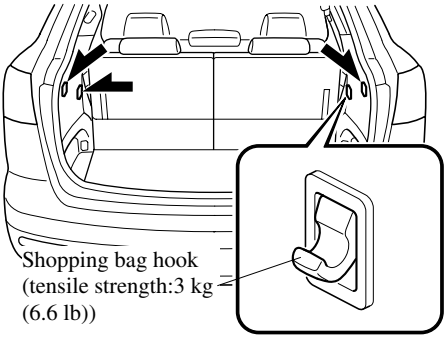

▼Luggage Compartment

Golf bags can be carried in the luggage compartment.
To carry two golf bags, use the following procedure:

1. Put one golf bag in the luggage compartment with its top pointing to the left.

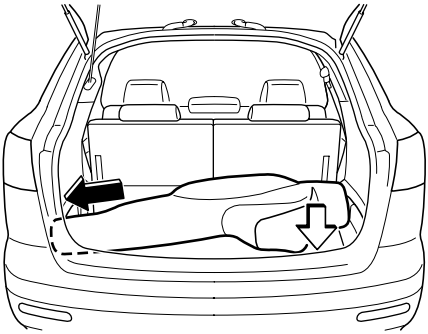

2. Put the other golf bag on top of the first bag with its top pointing to the right.

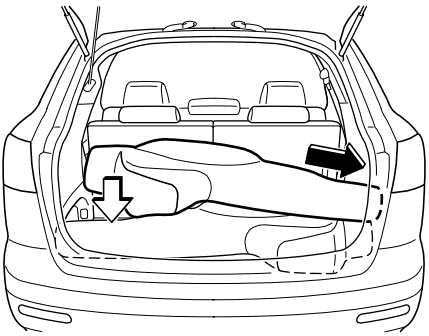

NOTE

- *Some golf bags cannot fit depending on their size.*
- *Golf bags up to nine inches in diameter can be carried.*

Accessory Sockets

Only use genuine Mazda accessories or the equivalent requiring no greater than 120 W (DC 12 V, 10 A).

Front

The ignition switch must be in the ACC or ON position.

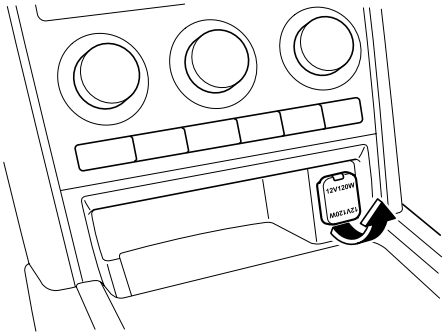

Center/Rear

The accessory sockets can be used regardless of the position of the ignition switch.

Center

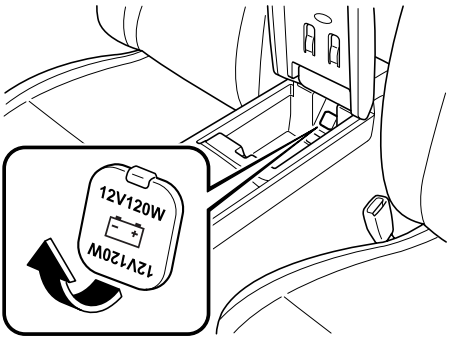

Rear

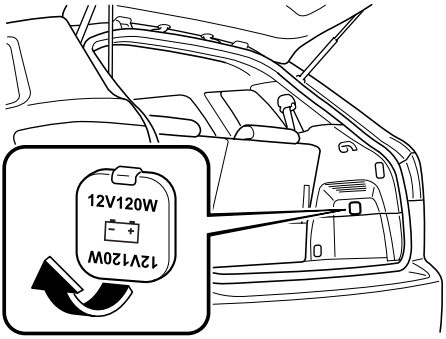

CAUTION

To prevent accessory socket damage or electrical failure, pay attention to the following:

- *Do not use accessories that require more than 120 W (DC 12 V, 10 A).*
- *Do not use accessories that are not genuine Mazda accessories or the equivalent.*
- *Close the cover when the accessory socket is not in use to prevent foreign objects and liquids from getting into the accessory socket.*
- *Correctly insert the plug into the accessory socket.*

NOTE

To prevent discharging of the battery, do not use the socket for long periods with the engine off or idling.

Power Outlet*

The power outlet is positioned as shown in the figure.

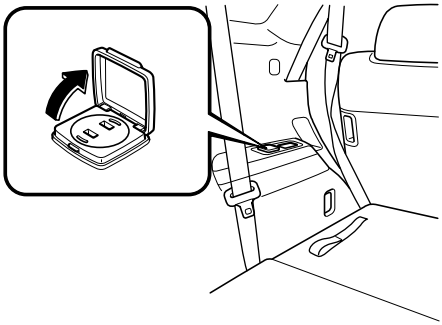

For more details, refer to
“Auxiliary terminals and power outlet” (page 6-88).

 *Some models.

7 In Case of an Emergency

Helpful information on what to do in an emergency.

Parking in an Emergency 7-2
Parking in an Emergency 7-2

Flat Tire 7-3
Spare Tire and Tool Storage 7-3
Changing a Flat Tire 7-8

Overheating 7-14
Overheating 7-14

Emergency Starting 7-16
Starting a Flooded Engine 7-16
Jump-Starting 7-17
Push-Starting 7-19

Emergency Towing 7-20
Towing Description 7-20
Tiedown Hooks 7-21
Recreational Towing 7-23

Parking in an Emergency

The hazard warning lights should always be used when you stop on or near a roadway in an emergency.

The hazard warning lights warn other drivers that your vehicle is a traffic hazard and that they must take extreme caution when near it.

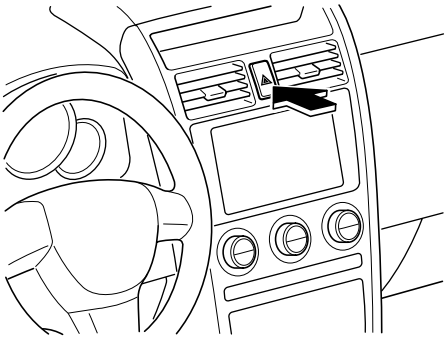

Depress the hazard warning flasher and all the turn signals will flash.

NOTE

- *The turn signals do not work when the hazard warning lights are on.*
- *Check local regulations about the use of hazard warning lights while the vehicle is being towed to verify that it is not in violation of the law.*

Spare Tire and Tool Storage

Spare tire and tools are stored in the locations illustrated in the diagram.

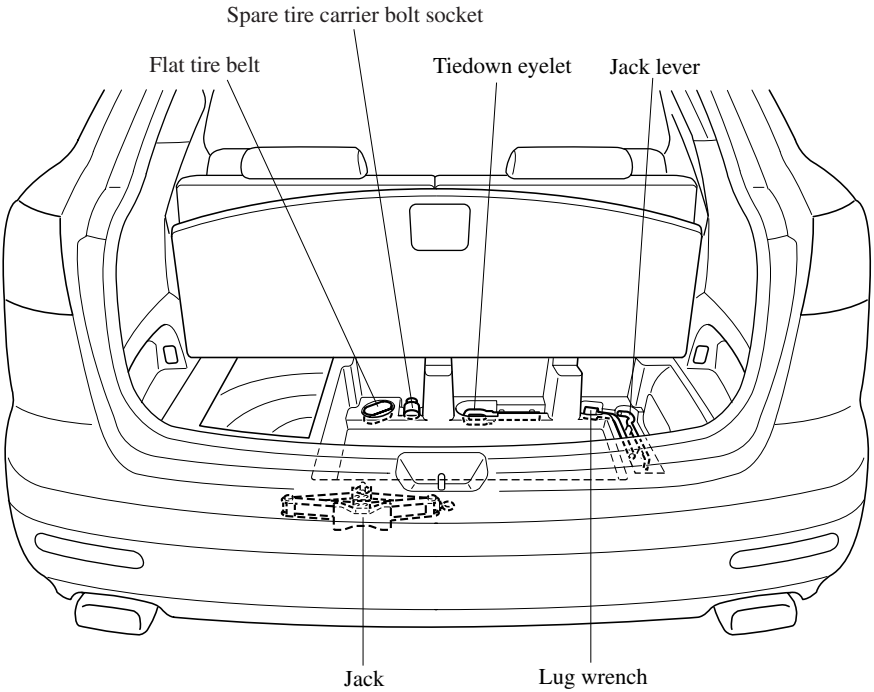

▼Jack

To remove the jack

1. Open the cargo sub-compartment.
2. Remove the cover.

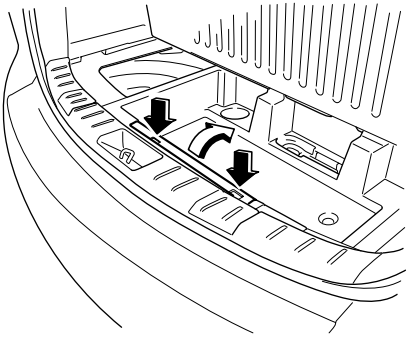

3. Turn the wing bolt and jack screw counterclockwise.

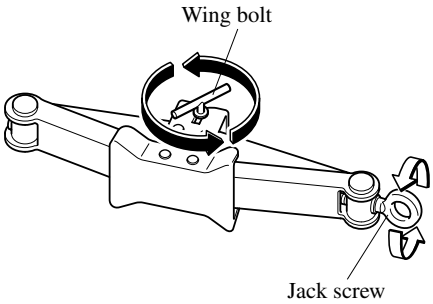

To secure the jack

1. Insert the wing bolt into the jack with the jack screw pointing right and turn the wing bolt clockwise to temporarily tighten it.
2. Turn the jack screw in the direction shown in the figure.

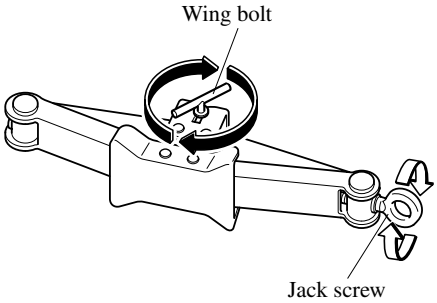

3. Turn the wing bolt completely to secure the jack.

NOTE
If the jack is not completely secured, it could rattle while driving. Make sure the jack screw is sufficiently tightened.

▼Spare Tire

Your Mazda has a temporary spare tire. The temporary spare tire is lighter and smaller than a conventional tire, and is designed only for emergency use and should be used only for VERY short periods. Temporary spare tires should NEVER be used for long drives or extended periods.

WARNING

Do not install the temporary spare tire in place of a driving wheel:

Driving with the temporary spare tire on one of the driving wheels is dangerous. Especially on ice or snow. Handling will be affected. You could lose control of the vehicle and have an accident. Move a regular tire to a driving wheel and install the temporary spare tire to the non-driving wheel.

CAUTION

- *When using the temporary spare tire, driving stability may decrease compared to when using only the conventional tire. Drive carefully.*
- *To avoid damage to the temporary spare tire or to the vehicle, observe the following precautions:*
  - *Do not exceed 80 km/h (50 mph).*
  - *Avoid driving over obstacles. Also, do not drive through an automatic car wash. This tire's diameter is smaller than a conventional tire, so the ground clearance is reduced about 25 mm (1 in).*
  - *Do not use a tire chain on this tire because it will not fit properly.*
  - *Do not use your temporary spare tire on any other vehicle; it has been designed only for your Mazda.*
  - *Use only one temporary spare tire on your vehicle at the same time.*

NOTE

(With Tire Pressure Monitoring System)

A tire pressure sensor is not installed to the temporary spare tire. The warning light will flash continuously while the temporary spare tire is being used (page 5-29).

To remove the spare tire

1. Have everyone get out of the vehicle and away from the vehicle and traffic.
2. Open the cargo sub-compartment. Refer to Cargo Sub-Compartment on page 6-129.
3. Remove the cover.

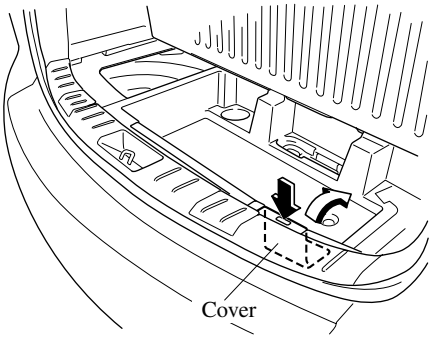

4. Attach the socket to the spare tire carrier bolt, the jack lever to the socket, and the lug wrench to the opposite end of the jack lever.

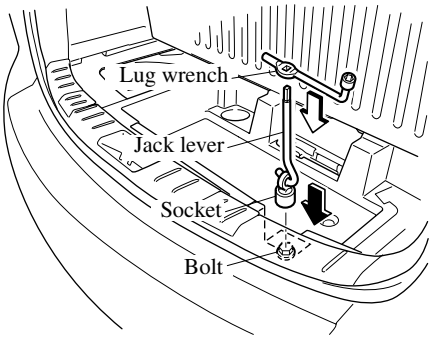

5. Slowly turn the lug wrench counterclockwise until the spare tire reaches the ground and the cable becomes loose.

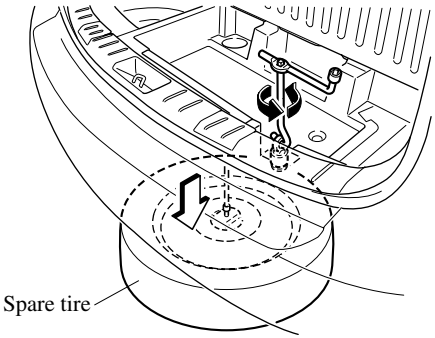

CAUTION

Do not loosen the cable too much as this may cause damage to the spare tire carrier.

6. Rotate the small lever on top of the retaining plate and pull the retaining plate out from the center hole of the tire.

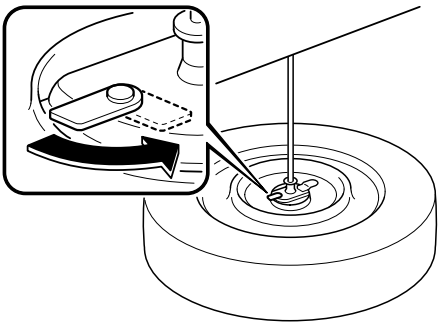

NOTE

A flat tire which has been removed from the vehicle for repair cannot be carried in the spare tire carrier. Secure the flat tire with the flat tire belt in the cargo sub-compartment (page 7-11).

7. If the temporary spare tire is not reinstalled in the spare tire carrier, tighten the spare tire carrier bolt completely to wind up the spare tire carrier cable.

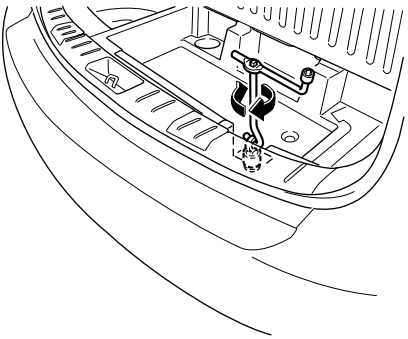

WARNING

Always tighten the spare tire carrier bolt completely tight and make sure the spare tire is locked in the highest position:

A loose spare tire carrier bolt is dangerous. The cable could be cut causing the spare tire to fall off. This could result in someone being seriously injured or even killed. Use a lug wrench to tighten the carrier bolt and make sure to tighten it until a click sound is heard.

To secure the spare tire

1. Place the tire with the outer side facing upward, rotate the small lever on top of the retaining plate and slide the retaining plate through the center hole of the tire.
   Rotate the small lever into place.

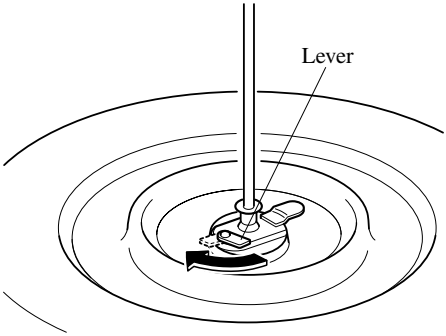

NOTE
Secure the spare tire as shown below.

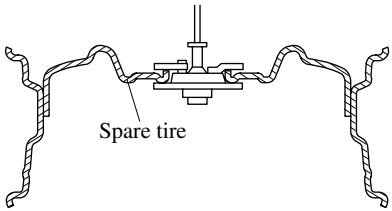

2. Raise the spare tire slowly in reverse order of removal.

WARNING

Place the specialized temporary spare tire in the spare tire carrier correctly:
Placing the specialized temporary spare tire in the spare tire carrier wrong side up or using any tire other than the small temporary spare tire designed for use with this vehicle is dangerous. It will result in poor attachment and insufficient ground clearance in the spare tire carrier and the danger of the tire falling off. This could result in someone being badly injured or even killed.

Always tighten the spare tire carrier bolt completely tight and make sure the spare tire is locked in the highest position:
A loose spare tire carrier bolt is dangerous. The cable could be cut causing the spare tire to fall off. This could result in someone being seriously injured or even killed. Use a lug wrench to tighten the carrier bolt and make sure to tighten it until a click sound is heard.

CAUTION

If you hear rattling from the spare tire carrier while the vehicle is moving, the spare tire carrier cable may be cut.
Have it repaired at an Authorized Mazda Dealer as soon as possible.

Changing a Flat Tire

NOTE
If the following occurs while driving, it could indicate a flat tire.
- *Steering becomes difficult.*
- *The vehicle begins to vibrate excessively.*
- *The vehicle pulls in one direction.*

If you have a flat tire, drive slowly to a level spot that is well off the road and out of the way of traffic to change the tire. Stopping in traffic or on the shoulder of a busy road is dangerous.

⚠ WARNING

Be sure to follow the directions for changing a tire, and never get under a vehicle that is supported only by a jack:
Changing a tire is dangerous if not done properly. The vehicle can slip off the jack and seriously injure someone.

Never allow anyone inside a vehicle supported by a jack:
Allowing someone to remain in a vehicle supported by a jack is dangerous. The occupant could cause the vehicle to fall resulting in serious injury.

⚠ CAUTION

(With Tire Pressure Monitoring System)
The wheels equipped on your Mazda are specially designed for installation of the tire pressure sensors. Do not use non-genuine wheels, otherwise it may not be possible to install the tire pressure sensors.

NOTE
- *Make sure the jack is well lubricated before using it.*

(With Tire Pressure Monitoring System)
- *Be sure to register the tire pressure sensor ID signal code whenever tires or wheels are changed (page 5-31).*

1. Park on a level surface off the right-of-way and firmly set the parking brake.
2. Shift into Park (P) and turn off the engine.
3. Turn on the hazard warning flasher.
4. Have everyone get out of the vehicle and away from the vehicle and traffic.
5. Remove the jack, tool, and spare tire (page 7-3).
6. Block the wheel diagonally opposite the flat tire. When blocking a wheel, place a tire block both in front and behind the tire.

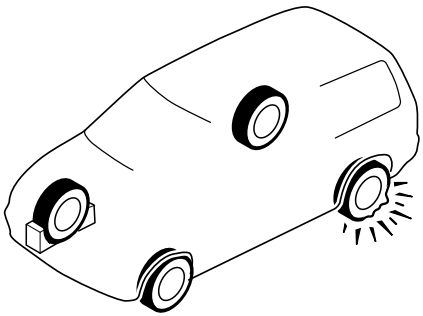

NOTE
When blocking a tire, use rocks or wood blocks of sufficient size if possible to hold the tire in place.

▼Removing a Flat Tire

1. Loosen the lug nuts by turning them counterclockwise one turn each, but don't remove any lug nuts until the tire has been raised off the ground.

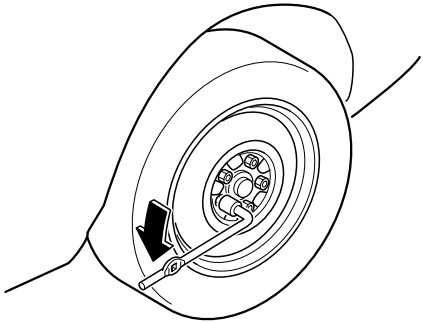

2. Place the jack under the jacking position closest to the tire being changed.

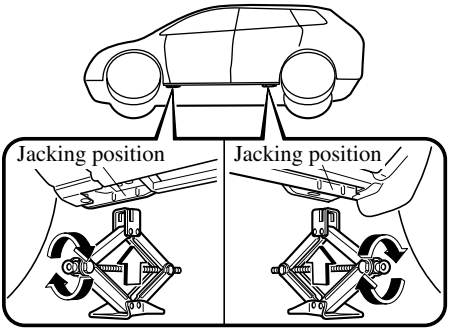

⚠ WARNING

Use only the front and rear jacking positions recommended in this manual:

Attempting to jack the vehicle in positions other than those recommended in this manual is dangerous. The vehicle could slip off the jack and seriously injure or even kill someone. Use only the front and rear jacking positions recommended in this manual.

Use only the jack provided with your Mazda:

Using a jack that is not designed for your Mazda is dangerous. The vehicle could slip off the jack and seriously injure someone.

Never place objects under the jack:

Jacking the vehicle with an object under the jack is dangerous. The jack could slip and someone could be seriously injured by the jack or the falling vehicle.

3. Insert the jack lever and attach the lug wrench to tire jack.

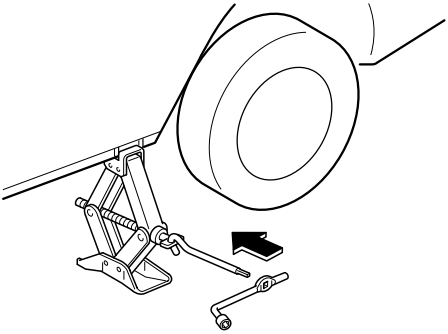

4. Turn the lug wrench clockwise and raise the vehicle high enough so that the spare tire can be installed. Before removing the lug nuts, make sure your Mazda is firmly in position and that it cannot slip or move.

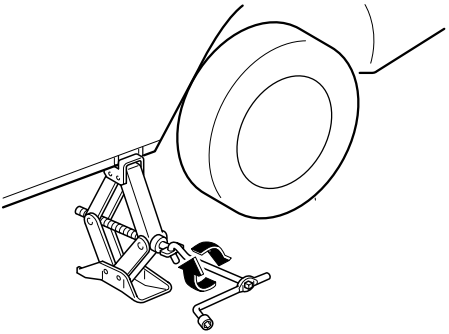

5. Remove the lug nuts by turning them counterclockwise; then remove the wheel and center cap.

▼Locking Lug Nuts*

If your vehicle has optional antitheft wheel lug nuts, one on each wheel will lock the tires and you must use a special key to unlock them. This key is attached to the lug wrench and is stored with the spare tire. Register them with the lock manufacturer by filling out the card provided in the glove box and mailing it in the accompanying envelope. If you lose this key, consult an Authorized Mazda Dealer or use the lock manufacturer's order form, which is with the registration card.

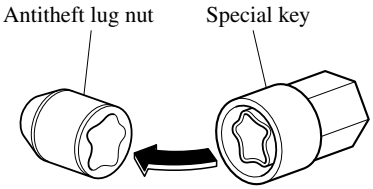

To remove an antitheft lug nut

1. Obtain the key for the antitheft lug nut.
2. Place the key on top of the nut, and be sure to hold the key square to it. If you hold the key at an angle, you may damage both key and nut. Don't use a power impact wrench.
3. Place the lug wrench on top of the key and apply pressure. Turn the wrench counterclockwise.

*Some models.

To install the nut

1. Place the key on top of the nut, and be sure to hold the key square to it. If you hold the key at an angle, you may damage both key and nut. Don't use a power impact wrench.
2. Place the lug wrench on top of the key, apply pressure, and turn it clockwise.

▼Mounting the Spare Tire

1. Remove dirt and grime from the mounting surfaces of the wheel and hub, including the hub bolts, with a cloth.

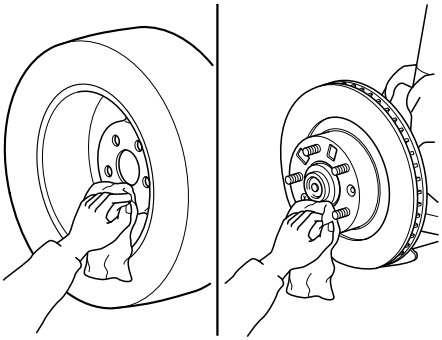

⚠ WARNING

Make sure the mounting surfaces of the wheel, hub and lug nuts are clean before changing or replacing tires:

When changing or replacing a tire, not removing dirt and grime from the mounting surfaces of the wheel, hub and hub bolts is dangerous. The lug nuts could loosen while driving and cause the tire to come off, resulting in an accident.

2. Mount the spare tire.
3. Install the lug nuts with the beveled edge inward; tighten them by hand.

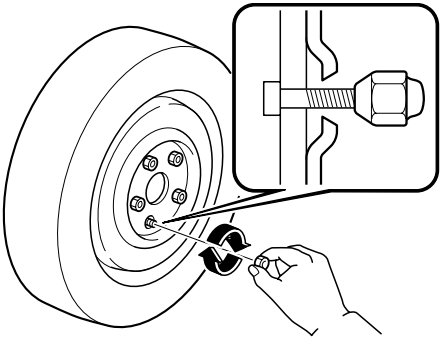

⚠ WARNING

Do not apply oil or grease to lug nuts and bolts and do not tighten the lug nuts beyond the recommended tightening torque:

Applying oil or grease to lug nuts and bolts is dangerous. The lug nuts could loosen while driving and cause the tire to come off, resulting in an accident. In addition, lug nuts and bolts could be damaged if tightened more than necessary.

4. Turn the lug wrench counterclockwise and lower the vehicle. Use the lug wrench to tighten the nuts in the order shown.

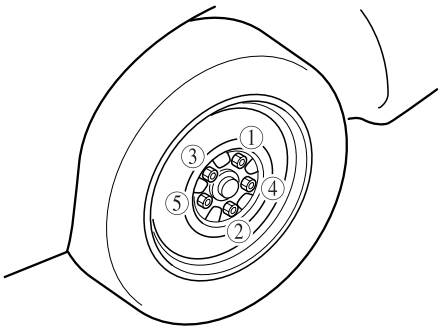

If you are unsure of how tight the nuts should be, have them inspected at an Authorized Mazda Dealer.

Nut tightening torque	
N·m (kgf·m, ft·lbf)	107.8—147.0 (11.0—14.9, 79.6—108.4)

WARNING

Always securely and correctly tighten the lug nuts:

Improperly or loosely tightened lug nuts are dangerous. The wheel could wobble or come off. This could result in loss of vehicle control and cause a serious accident.

Be sure to reinstall the same nuts you removed or replace them with metric nuts of the same configuration:

Because the wheel studs and lug nuts on your Mazda have metric threads, using a non-metric nut is dangerous. On a metric stud, it would not secure the wheel and would damage the stud, which could cause the wheel to slip off and cause an accident.

5. Open the cargo sub-compartment.
   Refer to Cargo Sub-Compartment on page 6-129.
6. Remove the cover.

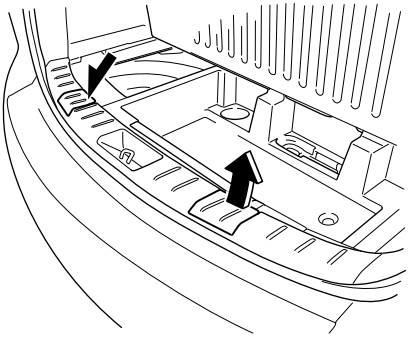

7. Remove the belt for securing the flat tire.
8. Return the third-row seatback to its original position.
   Refer to Fold the Third-Row Seat on page 2-17.
9. Remove the tire blocks and store the tools and jack.
10. Place the flat tire in the cargo sub-compartment.

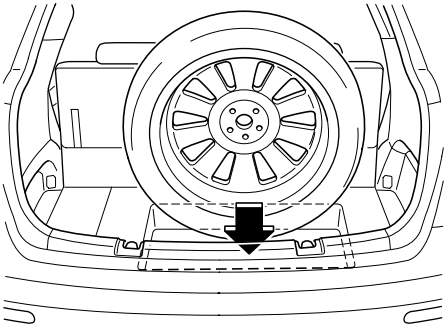

11. Thread the belt through the wheel as shown in the figure, then attach the belt clips to the attachment loop.

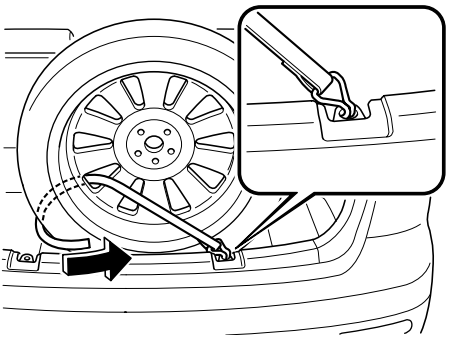

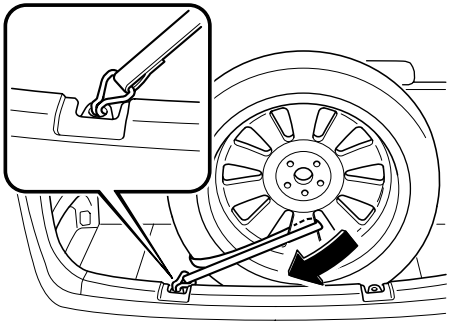

NOTE
*Attach location *1 of the belt to the attachment loop on the right.*

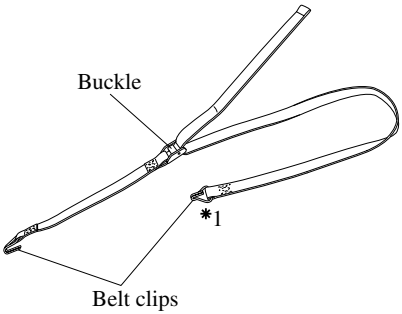

12. Pull the belt end to secure the flat tire.

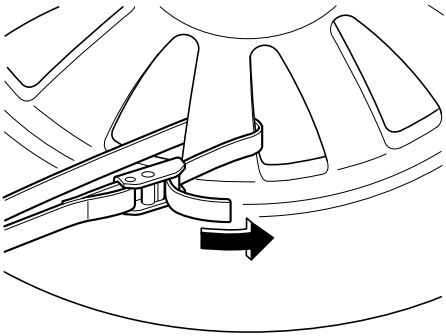

13. Check the tire inflation pressure. Refer to the specification charts on page 10-6.
14. Have the flat tire repaired or replaced as soon as possible.

⚠ WARNING

Do not drive with any tires that have incorrect air pressure:
Driving on tires with incorrect air pressure is dangerous. Tires with incorrect pressure could affect handling and result in an accident. When you check the regular tires' air pressure, check the spare tire, too.

NOTE
(With Tire Pressure Monitoring System)
A tire pressure sensor is not installed to the temporary spare tire. The warning light will flash continuously while the temporary spare tire is being used (page 5-29).

NOTE
To prevent the jack and tool from rattling, store them properly.

Overheating

If the temperature gauge indicates overheating, the vehicle loses power, or you hear a loud knocking or pinging noise, the engine is probably too hot.

WARNING

Turn off the ignition switch and make sure the fan is not running before attempting to work near the cooling fan:

Working near the cooling fan when it is running is dangerous. The fan could continue running indefinitely even if the engine has stopped and the engine compartment temperature is high. You could be hit by the fan and seriously injured.

Do not remove either cooling system caps when the engine and radiator are hot:

When the engine and radiator are hot, scalding coolant and steam may shoot out under pressure and cause serious injury.

Open the hood ONLY after steam is no longer escaping from the engine:

Steam from an overheated engine is dangerous. The escaping steam could seriously burn you.

If the temperature gauge indicates overheating:

1. Drive safely to the side of the road and park off the right-of-way.
2. Shift into park (P).
3. Apply the parking brake.
4. Turn off the air conditioner.
5. Check whether coolant or steam is escaping from under the hood or from the engine compartment.

   If steam is coming from the engine compartment:
   Don't go near the front of the vehicle.
   Stop the engine.
   Wait until the steam dissipates, then open the hood and start the engine.

   If neither coolant nor steam is escaping:
   Open the hood and idle the engine until it cools.

CAUTION

If the cooling fan does not operate while the engine is running, the engine temperature will increase. Stop the engine and call an Authorized Mazda Dealer.

6. Make sure the cooling fan is operating, then turn off the engine after the temperature has decreased.
7. When cool, check the coolant level.
   If it's low, look for coolant leaks from the radiator and hoses.

If you find a leak or other damage, or if coolant is still leaking:
Stop the engine and call an Authorized Mazda Dealer.

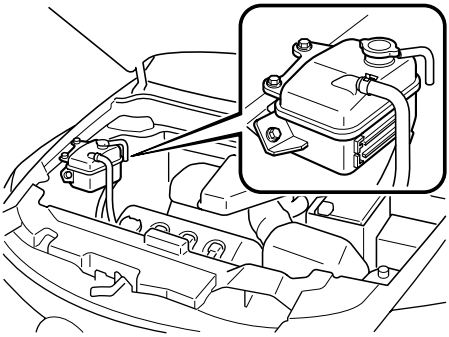

If you find no problems, the engine is cool, and no leaks are obvious:
Carefully add coolant as required (page 8-21).

⚠ CAUTION

If the engine continues to overheat or frequently overheats, have the cooling system inspected. The engine could be seriously damaged unless repairs are made. Consult an Authorized Mazda Dealer.

Starting a Flooded Engine

If the engine fails to start, it may be flooded (excessive fuel in the engine).

Follow this procedure:

1. If the engine does not start within 5 seconds on the first try, turn the key to the LOCK position, wait 10 seconds and try again.
2. Depress the accelerator all the way and hold it there.
3. Turn the ignition switch to the START position and hold it there—for up to 10 seconds. If the engine starts, release the key and accelerator immediately because the engine will suddenly rev up.
4. If the engine fails to start, crank it without depressing the accelerator—for up to 10 seconds.

If the engine still does not start using the above procedure, have your vehicle inspected by an Authorized Mazda Dealer.

Jump-Starting

Jump-starting is dangerous if done incorrectly. So follow the procedure carefully. If you feel unsure about jump-starting, we strongly recommend that you have a competent service technician do the work.

WARNING

Follow These Precautions Carefully:
To ensure safe and correct handling of the battery, read the following precautions carefully before using the battery or inspecting it.

Always wear eye protection when working near the battery:
Working without eye protection is dangerous. Battery fluid contains SULFURIC ACID which could cause blindness if splashed into your eyes. Also, hydrogen gas produced during normal battery operation, could ignite and cause the battery to explode.

Wear eye protection and protective gloves to prevent contact with battery fluid:
Spilled battery fluid is dangerous.
Battery fluid contains SULFURIC ACID which could cause serious injuries if it gets in eyes, skin or clothing. If this happens, immediately flush your eyes with water for 15 minutes or wash your skin thoroughly and get medical attention.

Always keep batteries out of the reach of children:
Allowing children to play near batteries is dangerous. Battery fluid could cause serious injuries if it gets in the eyes or on the skin.

Do not allow the positive (+) terminal to contact any other metal object that could cause sparks:
Flames and sparks near open battery cells are dangerous. Hydrogen gas, produced during normal battery operation, could ignite and cause the battery to explode. An exploding battery can cause serious burns and injuries. When working near a battery, do not allow metal tools to contact the positive (+) or negative (–) terminal of the battery.

Emergency Starting

Keep all flames, including cigarettes, and sparks away from open battery cells:
Flames and sparks near open battery cells are dangerous. Hydrogen gas, produced during normal battery operation, could ignite and cause the battery to explode. An exploding battery can cause serious burns and injuries.

Do not jump-start a frozen battery or one with a low fluid level:
Jump-starting a frozen battery or one with a low fluid level is dangerous. It may rupture or explode, causing serious injury.

Connect the negative cable to a good ground point away from the battery:
Connecting the end of the second jumper cable to the negative (–) terminal of the discharged battery is dangerous.
A spark could cause the gas around the battery to explode and injure someone.

Route the jumper cables away from parts that will be moving:
Connecting a jumper cable near or to moving parts (cooling fans, belts) is dangerous. The cable could get caught when the engine starts and cause serious injury.

CAUTION

Use only a 12 V booster system. You can damage a 12 V starter, ignition system, and other electrical parts beyond repair with a 24 V power supply (two 12 V batteries in series or a 24 V motor generator set).

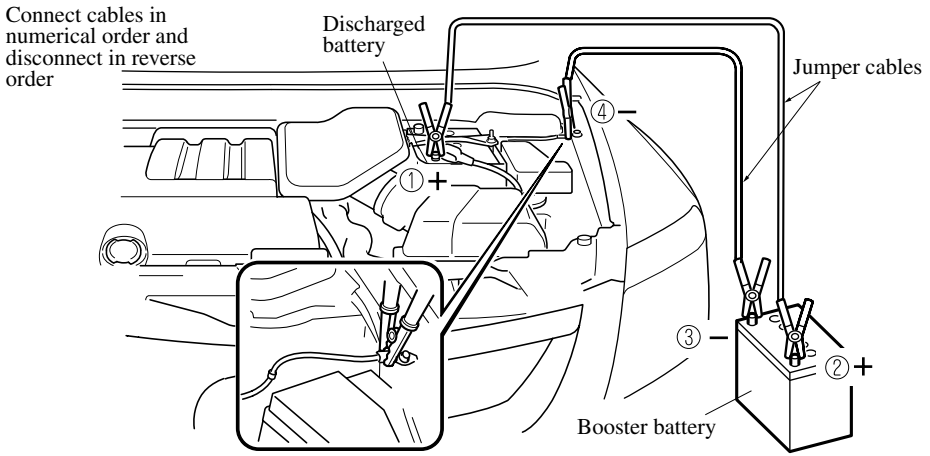

1. Make sure the booster battery is 12 V and that its negative terminal is grounded.
2. If the booster battery is in another vehicle, don't allow both vehicles to touch. Turn off the engine of the vehicle with the booster battery and all unnecessary electrical loads in both vehicles.
3. Connect the jumper cables in the exact sequence as in the illustration.
   - Connect one end of a cable to the positive terminal on the discharged battery (1).
   - Attach the other end to the positive terminal on the booster battery (2).
   - Connect one end of the other cable to the negative terminal of the booster battery (3).
   - Connect the other end to the ground point indicated in the illustration away from the discharged battery (4).
4. Start the engine of the booster vehicle and run it a few minutes. Then start the engine of the other vehicle.
5. When finished, carefully disconnect the cables in the reverse order described in the illustration.

Push-Starting

Do not push-start your Mazda.

NOTE

You can't start a vehicle with an automatic transaxle by pushing it.

Towing Description

We recommend that towing be done only by an Authorized Mazda Dealer or a commercial tow-truck service.

Proper lifting and towing are necessary to prevent damage to the vehicle.
Particularly when towing a AWD vehicle, where all the wheels are connected to the drive train, proper transporting of the vehicle is absolutely essential to avoid damaging the drive system. Government and local laws must be followed.

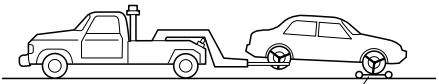

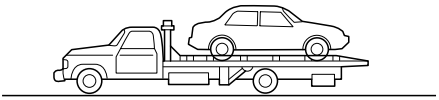

A towed 2WD vehicle should have its drive wheels (front wheels) off the ground. If excessive damage or other conditions prevent this, use wheel dollies.

When towing a 2WD vehicle with the rear wheels on the ground, release the parking brake.

A towed AWD vehicle must have all its wheels off the ground.

⚠ CAUTION

Don't tow the vehicle pointed backward with driving wheels on the ground. This may cause internal damage to the transaxle.

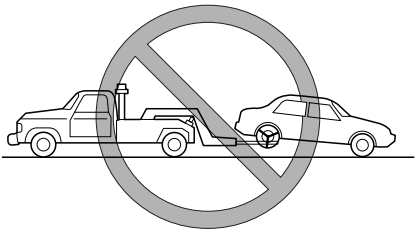

⚠ CAUTION

Don't tow with sling-type equipment. This could damage your vehicle. Use wheel-lift or flatbed equipment.

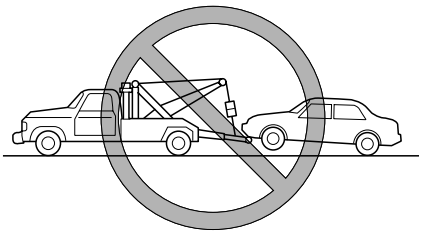

⚠ WARNING

Always tow a AWD vehicle with all four wheels off the ground:

Towing a AWD vehicle with either the front or rear wheels on the ground is dangerous as the drive train could be damaged, or the vehicle could trail away from the tow truck and cause an accident. If the drive train has been damaged, transport the vehicle on a flat bed truck.

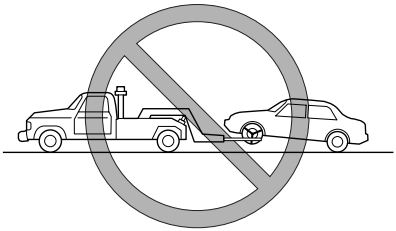

Tiedown Hooks

⚠ CAUTION

Don't use the tiedown hooks under the front and rear for towing. They are designed ONLY for tying down the vehicle when it's being transported. Using them for towing will damage the bumper.

▼Tiedown Hooks

1. Remove the tiedown eyelet and the lug wrench from the trunk (page 7-3).
2. Wrap a flathead screwdriver or similar tool with a soft cloth to prevent damage to the bumper and open the cap located on the front and rear bumper.

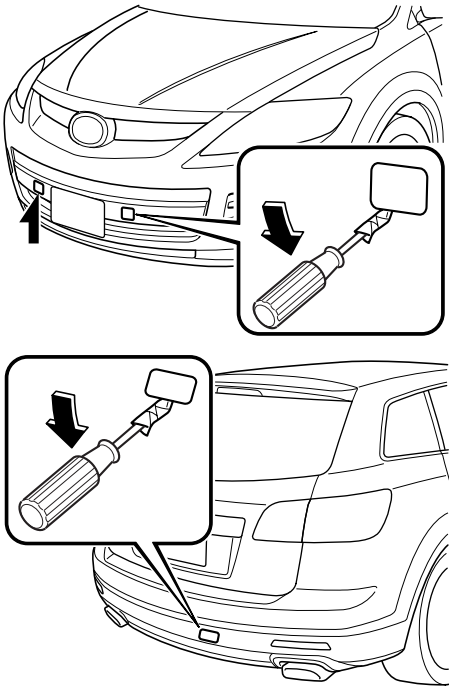

CAUTION

The cap cannot be completely removed. Do not use excessive force as it may damage the cap or scratch the painted bumper surface.

3. Securely install the tiedown eyelet using the lug wrench.

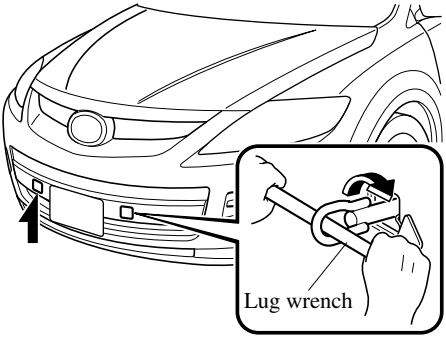

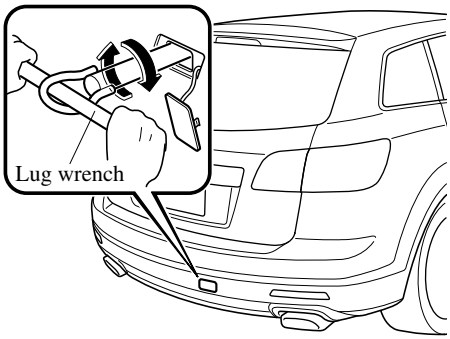

4. Hook the tying rope to the tiedown eyelet.

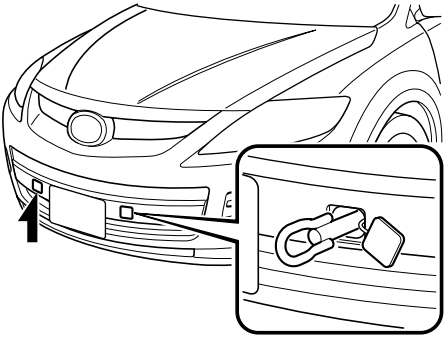

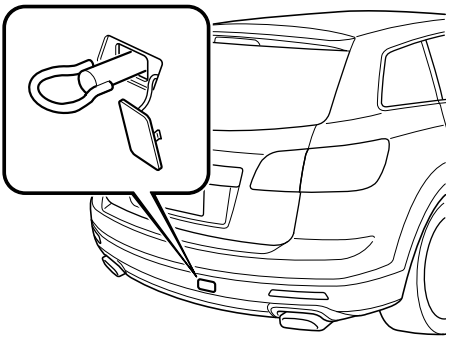

CAUTION

If the tiedown eyelet is not securely tightened, it may loosen or disengage from the bumper when tying down the vehicle. Make sure that the tiedown eyelet is securely tightened to the bumper.

Recreational Towing

An example of “recreational towing” is towing your vehicle behind a motorhome. The transaxle is not designed for towing this vehicle on all 4 wheels.
When doing recreational towing refer to “Towing Description” (page 7-20) and “Tiedown Hooks” (page 7-21) and carefully follow the instructions.

8 Maintenance and Care

How to keep your Mazda in top condition.

Introduction 8-2
Introduction 8-2

Scheduled Maintenance 8-3
Scheduled Maintenance (USA, Canada, and Puerto Rico) 8-3
Scheduled Maintenance (Mexico) 8-9

Owner Maintenance 8-16
Owner Maintenance Schedule 8-16
Owner Maintenance Precautions 8-17
Engine Compartment Overview 8-18
Engine Oil 8-19
Engine Coolant 8-21
Brake Fluid 8-23
Power Steering Fluid 8-24
Automatic Transaxle Fluid (ATF) 8-24
Washer Fluid 8-26
Body Lubrication 8-27
Wiper Blades 8-27
Battery 8-31
Tires 8-33
Light Bulbs 8-37
Fuses 8-44

Appearance Care 8-52
How to Minimize Environmental Paint Damage 8-52
Exterior Care 8-54
Interior Care 8-57

Introduction

Be extremely careful and prevent injury to yourself and others or damage to your vehicle when using this manual for inspection and maintenance.

If you're unsure about any procedure it describes, we strongly urge you to have a reliable and qualified service shop perform the work, preferably an Authorized Mazda Dealer.

Factory-trained Mazda technicians and genuine Mazda parts are best for your vehicle. Without this expertise and the parts that have been designed and made especially for your Mazda, inadequate, incomplete, and insufficient servicing may result in problems. This could lead to vehicle damage or an accident and injuries.

For expert advice and quality service, consult an Authorized Mazda Dealer.

The owner should retain evidence that proper maintenance has been performed as prescribed.

Claims against the warranty resulting from lack of maintenance, as opposed to defective materials or authorized Mazda workmanship, will not be honored.

Any auto repair shop using parts equivalent to your Mazda's original equipment may perform maintenance. **But we recommend that it always be done by an Authorized Mazda Dealer using genuine Mazda parts.**

Scheduled Maintenance (USA, Canada, and Puerto Rico)

Follow Schedule 1 if the vehicle is operated mainly where none of the following conditions apply.

- Repeated short-distance driving
- Driving in dusty conditions
- Driving with extended use of brakes
- Driving in areas where salt or other corrosive materials are being used
- Driving on rough or muddy roads
- Extended periods of idling or low-speed operation
- Driving for long periods in cold temperatures or extremely humid climates
- Driving in extremely hot conditions
- Driving in mountainous conditions continually

If any do apply, follow Schedule 2 (Canada and Puerto Rico residents follow Schedule 2).

NOTE

After the prescribed period, continue to follow the described maintenance at the recommended intervals.

Scheduled Maintenance

▼Schedule 1

Maintenance Interval		Number of months or kilometers (miles), whichever comes first							
	Months	6	12	18	24	30	36	42	48
	×1000 km	12	24	36	48	60	72	84	96
	×1000 miles	7.5	15	22.5	30	37.5	45	52.5	60
ENGINE									
Drive belts		Inspect every 168,000 km (105,000 miles)							
		Replace every 240,000 km (150,000 miles)							
Engine oil		R	R	R	R	R	R	R	R
Engine oil filter		R	R	R	R	R	R	R	R
COOLING SYSTEM									
Engine coolant	FL22 type*1	Replace at first 192,000 km (120,000 miles) or 10 years; after that, every 96,000 km (60,000 miles) or 5 years							
	Others	Replace at first 96,000 km (60,000 miles) or 4 years; after that, every 2 years							
FUEL SYSTEM									
Air filter				C		R			C
Fuel lines and hoses*2					I				I
Hoses and tubes for emission*2									I
IGNITION SYSTEM									
Spark plugs		Replace every 160,000 km (100,000 miles)							
CHASSIS and BODY									
Brake lines, hoses and connections					I				I
Disc brakes			I		I		I		I
Tire (Rotation)		Rotate every 12,000 km (7,500 miles)							
Steering operation and linkages					I				I
Front and rear suspension, ball joints and wheel bearing axial play					I				I
Rear differential oil (AWD)		*3*4							
Driveshaft dust boots					I				I
Bolts and nuts on chassis and body					T				T
Exhaust system and heat shields		Inspect every 72,000 km (45,000 miles) or 5 years							
All locks and hinges		L	L	L	L	L	L	L	L

Maintenance Interval	Number of months or kilometers (miles), whichever comes first								
	Months	**6**	**12**	**18**	**24**	**30**	**36**	**42**	**48**
	×1000 km	**12**	**24**	**36**	**48**	**60**	**72**	**84**	**96**
	×1000 miles	**7.5**	**15**	**22.5**	**30**	**37.5**	**45**	**52.5**	**60**
AIR CONDITIONER SYSTEM									
Cabin air filter	Replace every 40,000 km (25,000 miles) or 2 years								

Chart symbols:

I: Inspect: Inspect and clean, repair, adjust, or replace if necessary.
R: Replace
C: Clean
T: Tighten
L: Lubricate

Remarks:

*1 Use FL22 type coolant in vehicles with the inscription “FL22” on the radiator cap itself or the surrounding area. Use FL22 when replacing the coolant.
*2 According to state/provincial and federal regulations, failure to perform maintenance on these items will not void your emissions warranties. However, Mazda recommends that all maintenance services be performed at the recommended time or mileage/kilometer period to ensure long-term reliability.
*3 If the vehicle is operated primarily under any of the following conditions, replace the rear differential oil at every 45,000 km (28,100 miles).
a) Towing a trailer or using a car-top carrier
b) Driving in dusty, sandy or wet condition
c) Extended periods of idling or low speed operation
d) Repeated short trips of less than 16 km (10 miles)
*4 If this component has been submerged in water, the oil should be replaced.

▼Schedule 2

Maintenance Interval		Number of months or kilometers (miles), whichever comes first											
		Months	**4**	**8**	**12**	**16**	**20**	**24**	**28**	**32**	**36**	**40**	**44**	**48**
		×1000 km	**8**	**16**	**24**	**32**	**40**	**48**	**56**	**64**	**72**	**80**	**88**	**96**
		×1000 miles	**5**	**10**	**15**	**20**	**25**	**30**	**35**	**40**	**45**	**50**	**55**	**60**
ENGINE														
Drive belts			Inspect every 160,000 km (100,000 miles)											
			Replace every 240,000 km (150,000 miles)											
Engine oil	Puerto Rico		Replace every 5,000 km (3,000 miles) or 3 months											
	Others		R	R	R	R	R	R	R	R	R	R	R	R
Engine oil filter			R	R	R	R	R	R	R	R	R	R	R	R
COOLING SYSTEM														
Engine coolant	FL22 type*1		Replace at first 192,000 km (120,000 miles) or 10 years; after that, every 96,000 km (60,000 miles) or 5 years											
	Others		Replace at first 96,000 km (60,000 miles) or 4 years; after that, every 2 years											
Engine coolant level			I	I	I	I	I	I	I	I	I	I	I	I
FUEL SYSTEM														
Air filter	Puerto Rico				C			R			C			R
	Others					C			R				C	
Fuel lines and hoses*2								I						I
Hoses and tubes for emission*2														I
IGNITION SYSTEM														
Spark plugs	USA		Replace every 96,000 km (60,000 miles)											
	Others*3		Replace every 160,000 km (100,000 miles)											
ELECTRICAL SYSTEM														
Function of all lights			I	I	I	I	I	I	I	I	I	I	I	I

Maintenance Interval	Number of months or kilometers (miles), whichever comes first												
	Months	**4**	**8**	**12**	**16**	**20**	**24**	**28**	**32**	**36**	**40**	**44**	**48**
	×1000 km	**8**	**16**	**24**	**32**	**40**	**48**	**56**	**64**	**72**	**80**	**88**	**96**
	×1000 miles	**5**	**10**	**15**	**20**	**25**	**30**	**35**	**40**	**45**	**50**	**55**	**60**
CHASSIS and BODY													
Brake lines, hoses and connections							I						I
Brake fluid level		I	I	I	I	I	I	I	I	I	I	I	I
Disc brakes				I			I			I			I
Tire (Rotation)		Rotate every 8,000 km (5,000 miles)											
Tire inflation pressure and tire wear		I	I	I	I	I	I	I	I	I	I	I	I
Steering operation and linkages							I						I
Power steering fluid level		I	I	I	I	I	I	I	I	I	I	I	I
Front and rear suspension, ball joints and wheel bearing axial play							I						I
Rear differential oil (AWD)		*4*5											
Driveshaft dust boots							I						I
Bolts and nuts on chassis and body							T						T
Exhaust system and heat shields		Inspect every 72,000 km (45,000 miles) or 5 years											
All locks and hinges		L	L	L	L	L	L	L	L	L	L	L	L
Washer fluid level		I	I	I	I	I	I	I	I	I	I	I	I

Scheduled Maintenance

Maintenance Interval	Number of months or kilometers (miles), whichever comes first												
	Months	**4**	**8**	**12**	**16**	**20**	**24**	**28**	**32**	**36**	**40**	**44**	**48**
	×1000 km	**8**	**16**	**24**	**32**	**40**	**48**	**56**	**64**	**72**	**80**	**88**	**96**
	×1000 miles	**5**	**10**	**15**	**20**	**25**	**30**	**35**	**40**	**45**	**50**	**55**	**60**
AIR CONDITIONER SYSTEM													
Cabin air filter	Replace every 40,000 km (25,000 miles) or 2 years												

Chart symbols:

I: Inspect: Inspect and clean, repair, adjust, or replace if necessary.
R: Replace
C: Clean
T: Tighten
L: Lubricate

Remarks:

*1 Use FL22 type coolant in vehicles with the inscription “FL22” on the radiator cap itself or the surrounding area. Use FL22 when replacing the coolant.
*2 According to state/provincial and federal regulations, failure to perform maintenance on these items will not void your emissions warranties. However, Mazda recommends that all maintenance services be performed at the recommended time or mileage/kilometer period to ensure long-term reliability.
*3 If the vehicle is operated primarily under any of the following conditions, replace the spark plugs at every 96,000 km (60,000 miles) or shorter.
a) Repeated short-distance driving
b) Extended periods of idling or low-speed operation
c) Driving for long periods in cold temperatures or extremely humid climates
*4 If the vehicle is operated primarily under any of the following conditions, replace the rear differential oil at every 45,000 km (28,100 miles).
a) Towing a trailer or using a car-top carrier
b) Driving in dusty, sandy or wet condition
c) Extended periods of idling or low speed operation
d) Repeated short trips of less than 16 km (10 miles)
*5 If this component has been submerged in water, the oil should be replaced.

Scheduled Maintenance (Mexico)

Follow Schedule 1 if the vehicle is operated mainly where none of the following conditions apply.

- Repeated short-distance driving
- Driving in dusty conditions
- Driving with extended use of brakes
- Driving in areas where salt or other corrosive materials are being used
- Driving on rough or muddy roads
- Extended periods of idling or low-speed operation
- Driving for long periods in cold temperatures or extremely humid climates
- Driving in extremely hot conditions
- Driving in mountainous conditions continually

If any do apply, follow Schedule 2.

NOTE

After the prescribed period, continue to follow the described maintenance at the recommended intervals.

Scheduled Maintenance

▼Schedule 1

Maintenance Interval		Number of months or kilometers, whichever comes first											
	Months	6	12	18	24	30	36	42	48	54	60	66	72
	×1000 km	10	20	30	40	50	60	70	80	90	100	110	120
ENGINE													
Drive belts		Inspect every 40,000 km or 2 years											
		Replace every 240,000 km											
Engine oil		R	R	R	R	R	R	R	R	R	R	R	R
Engine oil filter		R	R	R	R	R	R	R	R	R	R	R	R
COOLING SYSTEM													
Cooling system					I				I				I
Engine coolant	FL22 type*1	Replace at first 190,000 km or 10 years; after that, every 60,000 km or 3 years											
	Others				R				R				R
FUEL SYSTEM													
Air filter			R		R		R		R		R		R
Fuel lines and hoses					I*2				I*2				I
Hoses and tubes for emission					I*2				I*2				I
Fuel filter					R				R				R
IGNITION SYSTEM													
Spark plugs		Replace every 60,000 km											
CHASSIS and BODY													
Brake lines, hoses and connections			I		I		I		I		I		I
Brake fluid level		I	I	I		I	I	I		I	I	I	
Brake fluid					R				R				R
Disc brakes		I	I	I	I	I	I	I	I	I	I	I	I
Tire (Rotation)		Rotate every 10,000 km											
Tire inflation pressure and tire wear		I	I	I	I	I	I	I	I	I	I	I	I
Steering operation and linkages		I	I	I	I	I	I	I	I	I	I	I	I
Power steering fluid level		I	I	I	I	I	I	I	I	I	I	I	I
Front and rear suspension, ball joints and wheel bearing axial play			I		I		I		I		I		I
Rear differential oil (AWD)		*3*4											
Driveshaft dust boots			I		I		I		I		I		I
Bolts and nuts on chassis and body			T		T		T		T		T		T
Exhaust system and heat shields			I		I		I		I		I		I
All locks and hinges		L	L	L	L	L	L	L	L	L	L	L	L
Washer fluid level		I	I	I	I	I	I	I	I	I	I	I	I

Maintenance Interval	Number of months or kilometers, whichever comes first												
	Months	6	12	18	24	30	36	42	48	54	60	66	72
	×1000 km	10	20	30	40	50	60	70	80	90	100	110	120
AIR CONDITIONER SYSTEM													
Cabin air filter					R				R				R

Chart symbols:

I: Inspect: Inspect and clean, repair, adjust, or replace if necessary.
R: Replace
C: Clean
T: Tighten
L: Lubricate

Remarks:

*1 Use FL22 type coolant in vehicles with the inscription “FL22” on the radiator cap itself or the surrounding area. Use FL22 when replacing the coolant.
*2 According to state/provincial and federal regulations, failure to perform maintenance on these items will not void your emissions warranties. However, Mazda recommends that all maintenance services be performed at the recommended time or kilometer period to ensure long-term reliability.
*3 If the vehicle is operated primarily under any of the following conditions, replace the rear differential oil at every 40,000 km.
a) Towing a trailer or using a car-top carrier
b) Driving in dusty, sandy or wet condition
c) Extended periods of idling or low speed operation
d) Repeated short trips of less than 16 km
*4 If this component has been submerged in water, the oil should be replaced.

Scheduled Maintenance

▼Schedule 2

Maintenance Interval		Number of months or kilometers, whichever comes first											
	Months	3	6	9	12	15	18	21	24	27	30	33	36
	×1000 km	5	10	15	20	25	30	35	40	45	50	55	60
ENGINE													
Drive belts		Inspect every 40,000 km or 2 years											
		Replace every 240,000 km											
Engine oil		R	R	R	R	R	R	R	R	R	R	R	R
Engine oil filter		R	R	R	R	R	R	R	R	R	R	R	R
COOLING SYSTEM													
Cooling system									I				
Engine coolant	FL22 type*1	Replace at first 190,000 km or 10 years; after that, every 60,000 km or 3 years											
	Others								R				
Engine coolant level		I	I	I	I	I	I	I	I	I	I	I	I
FUEL SYSTEM													
Air filter			C		R		C		R		C		R
Fuel lines and hoses									I*2				
Hoses and tubes for emission									I*2				
Fuel filter									R				
IGNITION SYSTEM													
Spark plugs		Replace every 60,000 km											
ELECTRICAL SYSTEM													
Function of all lights		I	I	I	I	I	I	I	I	I	I	I	I
CHASSIS and BODY													
Brake lines, hoses and connections					I				I				I
Brake fluid level			I		I		I				I		I
Brake fluid									R				
Disc brakes			I		I		I		I		I		I
Tire (Rotation)		Rotate every 10,000 km											
Tire inflation pressure and tire wear			I		I		I		I		I		I
Steering operation and linkages			I		I		I		I		I		I
Power steering fluid level			I		I		I		I		I		I
Front and rear suspension, ball joints and wheel bearing axial play					I				I				I
Rear differential oil (AWD)		*3*4											
Driveshaft dust boots					I				I				I
Bolts and nuts on chassis and body					T				T				T
Exhaust system and heat shields					I				I				I
All locks and hinges			L		L		L		L		L		L
Washer fluid level			I		I		I		I		I		I

Maintenance Interval	Number of months or kilometers, whichever comes first												
	Months	3	6	9	12	15	18	21	24	27	30	33	36
	×1000 km	5	10	15	20	25	30	35	40	45	50	55	60
AIR CONDITIONER SYSTEM													
Cabin air filter					R				R				R

Chart symbols:

I: Inspect: Inspect and clean, repair, adjust, or replace if necessary.
R: Replace
C: Clean
T: Tighten
L: Lubricate

Remarks:

*1 Use FL22 type coolant in vehicles with the inscription “FL22” on the radiator cap itself or the surrounding area. Use FL22 when replacing the coolant.
*2 According to state/provincial and federal regulations, failure to perform maintenance on these items will not void your emissions warranties. However, Mazda recommends that all maintenance services be performed at the recommended time or kilometer period to ensure long-term reliability.
*3 If the vehicle is operated primarily under any of the following conditions, replace the rear differential oil at every 40,000 km.
a) Towing a trailer or using a car-top carrier
b) Driving in dusty, sandy or wet condition
c) Extended periods of idling or low speed operation
d) Repeated short trips of less than 16 km
*4 If this component has been submerged in water, the oil should be replaced.

Scheduled Maintenance

(Cont.)

Maintenance Interval		Number of months or kilometers, whichever comes first											
	Months	39	42	45	48	51	54	57	60	63	66	69	72
	×1000 km	65	70	75	80	85	90	95	100	105	110	115	120
ENGINE													
Drive belts		Inspect every 40,000 km or 2 years											
		Replace every 240,000 km											
Engine oil		R	R	R	R	R	R	R	R	R	R	R	R
Engine oil filter		R	R	R	R	R	R	R	R	R	R	R	R
COOLING SYSTEM													
Cooling system					I								I
Engine coolant	FL22 type*1	Replace at first 190,000 km or 10 years; after that, every 60,000 km or 3 years											
	Others				R								R
Engine coolant level		I	I	I	I	I	I	I	I	I	I	I	I
FUEL SYSTEM													
Air filter			C		R		C		R		C		R
Fuel lines and hoses					I*2								I
Hoses and tubes for emission					I*2								I
Fuel filter					R								R
IGNITION SYSTEM													
Spark plugs		Replace every 60,000 km											
ELECTRICAL SYSTEM													
Function of all lights		I	I	I	I	I	I	I	I	I	I	I	I
CHASSIS and BODY													
Brake lines, hoses and connections					I				I				I
Brake fluid level			I				I		I		I		
Brake fluid					R								R
Disc brakes			I		I		I		I		I		I
Tire (Rotation)		Rotate every 10,000 km											
Tire inflation pressure and tire wear			I		I		I		I		I		I
Steering operation and linkages			I		I		I		I		I		I
Power steering fluid level			I		I		I		I		I		I
Front and rear suspension, ball joints and wheel bearing axial play					I				I				I
Rear differential oil (AWD)		*3*4											
Driveshaft dust boots					I				I				I
Bolts and nuts on chassis and body					T				T				T
Exhaust system and heat shields					I				I				I
All locks and hinges			L		L		L		L		L		L
Washer fluid level			I		I		I		I		I		I

Maintenance Interval	Number of months or kilometers, whichever comes first												
	Months	39	42	45	48	51	54	57	60	63	66	69	72
	×1000 km	65	70	75	80	85	90	95	100	105	110	115	120
AIR CONDITIONER SYSTEM													
Cabin air filter					R				R				R

Chart symbols:

I: Inspect: Inspect and clean, repair, adjust, or replace if necessary.
R: Replace
C: Clean
T: Tighten
L: Lubricate

Remarks:

*1 Use FL22 type coolant in vehicles with the inscription “FL22” on the radiator cap itself or the surrounding area. Use FL22 when replacing the coolant.
*2 According to state/provincial and federal regulations, failure to perform maintenance on these items will not void your emissions warranties. However, Mazda recommends that all maintenance services be performed at the recommended time or kilometer period to ensure long-term reliability.
*3 If the vehicle is operated primarily under any of the following conditions, replace the rear differential oil at every 40,000 km.
a) Towing a trailer or using a car-top carrier
b) Driving in dusty, sandy or wet condition
c) Extended periods of idling or low speed operation
d) Repeated short trips of less than 16 km
*4 If this component has been submerged in water, the oil should be replaced.

Owner Maintenance Schedule

The owner or a qualified service technician should make these vehicle inspections at the indicated intervals to ensure safe and dependable operation.

Bring any problem to the attention of an Authorized Mazda Dealer or qualified service technician as soon as possible.

▼When Refueling

- Brake fluid level (page 8-23)
- Engine coolant level (page 8-21)
- Engine oil level (page 8-20)
- Washer fluid level (page 8-26)

▼At Least Monthly

Tire inflation pressures (page 8-33)

▼At Least Twice a Year (For Example, Every Spring and Fall)

- Automatic transaxle fluid level (page 8-24)
- Power steering fluid level (page 8-24)

You can do the following scheduled maintenance items if you have some mechanical ability and a few basic tools and if you closely follow the directions in this manual.

- Engine coolant (page 8-21)
- Engine oil (page 8-19)

Owner Maintenance Precautions

Improper or incomplete service may result in problems. This section gives instructions only for items that are easy to perform.

As explained in the Introduction (page 8-2), several procedures can be done only by a qualified service technician with special tools.

Improper owner maintenance during the warranty period may affect warranty coverage. For details, read the separate Mazda Warranty statement provided with the vehicle. If you're unsure about any servicing or maintenance procedure, have it done by an Authorized Mazda Dealer.

There are strict environmental laws regarding the disposal of waste oil and fluids. Please dispose of your waste properly and with due regard to the environment.

We recommend that you entrust the oil and fluid changes of your vehicle to an Authorized Mazda Dealer.

⚠ WARNING

Do not perform maintenance work if you lack sufficient knowledge and experience or the proper tools and equipment to do the work. Have maintenance work done by a qualified technician:

Performing maintenance work on a vehicle is dangerous if not done properly. You can be seriously injured while performing some maintenance procedures.

If you must run the engine while working under the hood, make certain that you remove all jewelry (especially rings, bracelets, watches, and necklaces) and all neckties, scarves, and similar loose clothing before getting near the engine or cooling fan which may turn on unexpectedly:

Working under the hood with the engine running is dangerous. It becomes even more dangerous when you wear jewelry or loose clothing.
Either can become entangled in moving parts and result in injury.

Turn off the ignition switch and make sure the fan is not running before attempting to work near the cooling fan:

Working near the cooling fan when it is running is dangerous. The fan could continue running indefinitely even if the engine has stopped and the engine compartment temperature is high. You could be hit by the fan and seriously injured.

Engine Compartment Overview

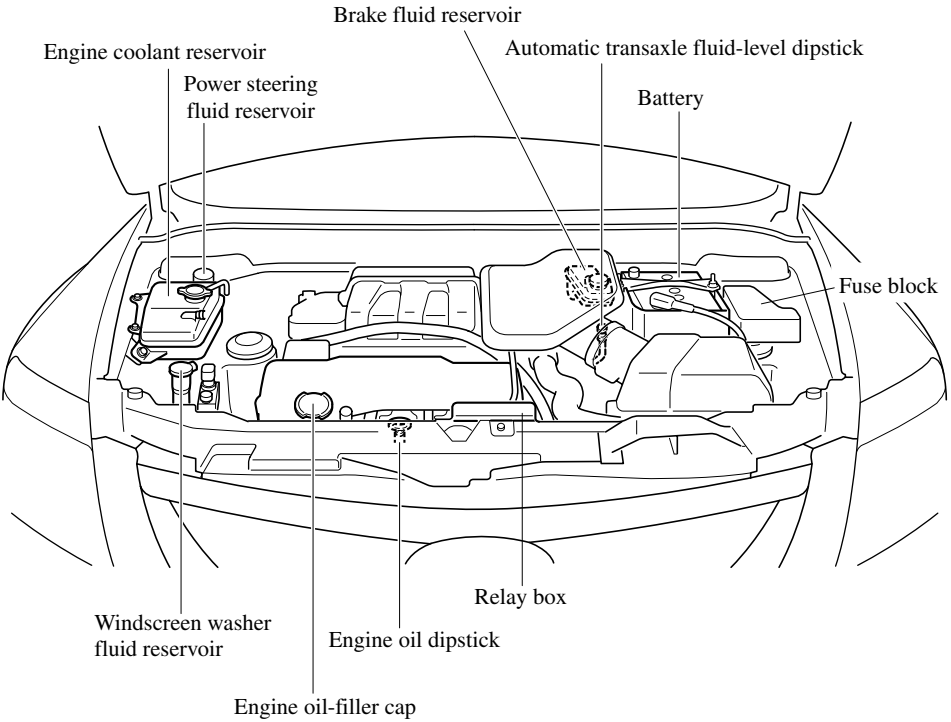

Engine Oil

NOTE
Changing the engine oil should be done by an Authorized Mazda Dealer.

▼Recommended Oil

Use SAE 5W-20 engine oil.
Oil container labels provide important information.
A chief contribution this type of oil makes to fuel economy is reducing the amount of fuel necessary to overcome engine friction.

U.S.A. and CANADA

(ILSAC)

Only use oils "Certified For Gasoline Engines" by the American Petroleum Institute (API). An oil with this trademark symbol conforms to the current engine and emission system protection standards and fuel economy requirements of the International Lubricant Standardization and Approval Committee (ILSAC), comprised of U.S. and Japanese automobile manufacturers.

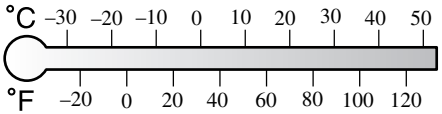

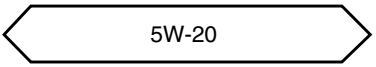

Except U.S.A. and CANADA

(ILSAC)

The quality designation SM, or ILSAC must be on the label.

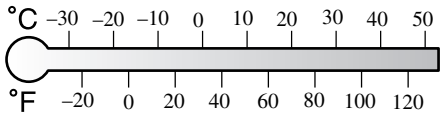

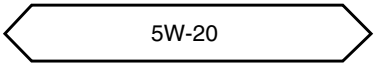

▼Inspecting Engine Oil Level

1. Be sure the vehicle is on a level surface.
2. Warm up the engine to normal operating temperature.
3. Turn it off and wait at least 5 minutes for the oil to return to the oil pan.
4. Pull out the dipstick, wipe it clean, and reinsert it fully.

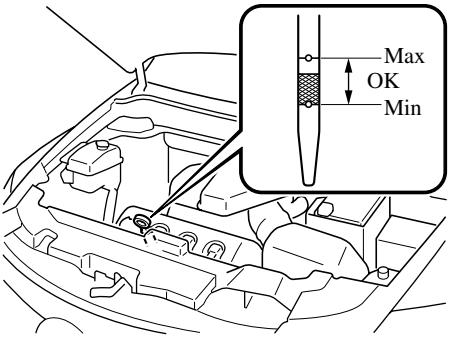

5. Pull it out again and examine the level. It's OK between MIN and MAX. But if it's near or below MIN, add enough oil to bring the level to MAX.

⚠ CAUTION

Don't add engine oil over MAX. This may cause engine damage.

6. Make sure the O-ring on the dipstick is positioned properly before reinserting the dipstick.

Engine Coolant

▼Inspecting Coolant Level

⚠ WARNING

Do not use a match or live flame in the engine compartment. DO NOT ADD COOLANT WHEN THE ENGINE IS HOT:

A hot engine is dangerous. If the engine has been running, parts of the engine compartment can become very hot. You could be burned. Carefully inspect the engine coolant in the coolant reservoir, but do not open it.

Turn off the ignition switch and make sure the fan is not running before attempting to work near the cooling fan:

Working near the cooling fan when it is running is dangerous. The fan could continue running indefinitely even if the engine has stopped and the engine compartment temperature is high. You could be hit by the fan and seriously injured.

✓ Do not remove either cooling system cap when the engine and radiator are hot:

When the engine and radiator are hot, scalding coolant and steam may shoot out under pressure and cause serious injury.

NOTE

Changing the coolant should be done by an Authorized Mazda Dealer.

Inspect the antifreeze protection and coolant level in the coolant reservoir at least once a year—at the beginning of the winter season—and before traveling where temperatures may drop below freezing.

Inspect the condition and connections of all cooling system and heater hoses. Replace any that are swollen or deteriorated.

The coolant should be at full in the radiator and between the F and L marks on the coolant reservoir when the engine is cool.

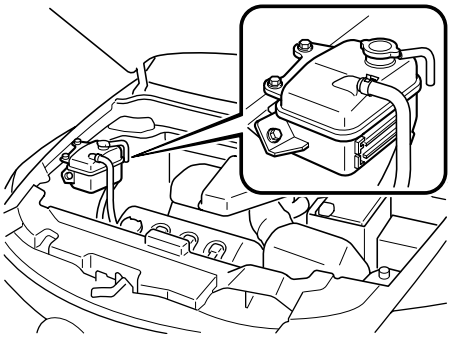

If it's at or near L, add enough coolant to the coolant reservoir to provide freezing and corrosion protection and to bring the level to F.

CAUTION

- *Radiator coolant will damage paint.*
  Rinse it off quickly if spilled.
- *Use only soft (demineralized) water in the coolant mixture.*
  Water that contains minerals will cut down on the coolant's effectiveness.
- *Don't add only water. Always add a proper coolant mixture.*
- *The engine has aluminum parts and must be protected by an ethylene-glycol-based coolant to prevent corrosion and freezing.*
- *DO NOT USE coolants Containing Alcohol, methanol, Borate or Silicate.*
  These coolants could damage the cooling system.
- *DO NOT MIX alcohol or methanol with the coolant. This could damage the cooling system.*
- *Don't use a solution that contains more than 60% antifreeze.*
  This would reduce effectiveness.

NOTE

If the "FL22" mark is shown on or near the cooling system cap, use FL22 type engine coolant. If engine coolant other than FL22 type is used, the engine coolant must be replaced earlier than the specified replacement interval indicated in the scheduled maintenance (page 8-3).

If the coolant reservoir is empty or new coolant is required frequently, consult an Authorized Mazda Dealer.

Brake Fluid

▼Inspecting Brake Fluid Level

Inspect the fluid level in the reservoir regularly. It should be kept at MAX.
The level normally drops with accumulated distance, a condition associated with wear of brake linings. If it is excessively low, have the brake system inspected by an Authorized Mazda Dealer.

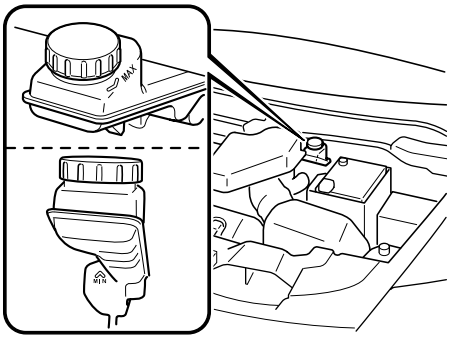

▼Adding Brake Fluid

⚠ WARNING

Be careful not to spill brake fluid on yourself or on the engine:

Spilled brake fluid is dangerous. If it gets in your eyes, they could be seriously injured. If this happens, immediately flush your eyes with water and get medical attention. Brake fluid spilled on a hot engine could cause a fire.

If the brake/clutch fluid level is low, have the brakes and clutch inspected:

Low brake fluid levels are dangerous. Low levels could signal brake lining wear or a brake system leak. Your brakes could fail and cause an accident.

If the fluid level is low, add fluid until it reaches MAX.
Before adding fluid, thoroughly clean the area around the cap.

⚠ CAUTION

- *Brake fluid will damage painted surfaces. If brake fluid does get on a painted surface, wash it off with water immediately.*
- *Using nonspecified brake fluids (page 10-4) will damage the system. Mixing different fluids will also damage it.*
  If the brake system frequently requires new fluid, consult an Authorized Mazda Dealer.

Power Steering Fluid

▼Inspecting Power Steering Fluid Level

⚠ CAUTION

To avoid damage to the power steering pump, don't operate the vehicle for long periods when the power steering fluid level is low.

NOTE
Use specified power steering fluid (page 10-4).

Inspect the fluid level in the reservoir at each engine oil change with the engine off and cold. Add fluid if necessary; it does not require periodic changing.

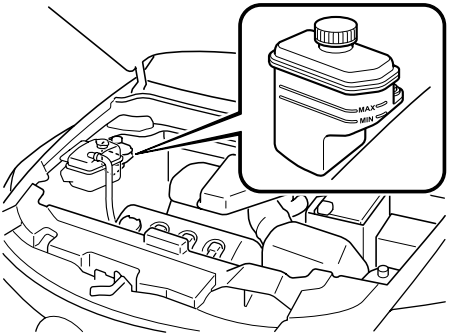

The level must be kept between MAX and MIN.

Visually examine the lines and hoses for leaks and damage.

If new fluid is required frequently, consult an Authorized Mazda Dealer.

Automatic Transaxle Fluid (ATF)

▼Inspecting Automatic Transaxle Fluid Level

The automatic transaxle fluid level should be inspected regularly. Measure it as described below.

The volume of fluid changes with temperature. Fluid must be checked while idling the engine without driving at normal operating temperature.

⚠ CAUTION

- *Low fluid level causes transaxle slippage. Overfilling can cause foaming, loss of fluid, and transaxle malfunction.*
- *Use specified fluid (page 10-4). A nonspecified fluid could result in transaxle malfunction and failure.*

1. Park on a level surface and set the parking brake firmly.
2. Start the engine and depress the brake pedal.
3. Move the shift lever through all ranges, then set it at P.

⚠ WARNING

Make sure the brake pedal is applied before shifting the shift lever:
Shifting the shift lever without first depressing the brake pedal is dangerous. The vehicle could move suddenly and cause an accident.

4. With the engine still idling, pull out the dipstick, wipe it clean, and put it back.

5. Pull it out again.
   The proper fluid level is marked on the dipstick as follows.

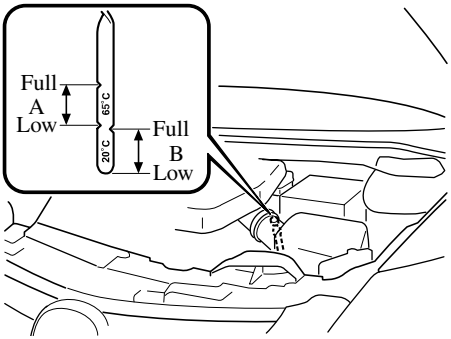

Fluid hot scale A

When the vehicle has been driven and the fluid is at normal operating temperature, about 65°C (150°F), the level must be between Full and Low.

Fluid cold scale B

When the engine has not been running and the outside temperature is about 20°C (70°F), the fluid level should be close to, but not above, the bottom notch on the dipstick.

CAUTION

- *Use the cold scale only as a reference.*
- *If outside temperature is lower than about 20°C (70°F), start the engine and inspect the fluid level after the engine reaches operating temperature.*
- *If the vehicle has been driven for an extended period at high speeds or in city traffic in hot weather, inspect the level only after stopping the engine and allowing the fluid to cool for 30 minutes.*

Fully insert the dipstick. When adding fluid, inspect with the dipstick to make sure it doesn't pass full.

NOTE

Inspect the fluid on both sides of the dipstick in a well lit area for an accurate reading.

Washer Fluid

▼Inspecting Washer Fluid Level

⚠ WARNING

Use only windshield washer fluid or plain water in the reservoir:

Using radiator antifreeze as washer fluid is dangerous. If sprayed on the windshield, it will dirty the windshield, affect your visibility, and could result in an accident.

Using Washer Fluid Without Anti-freeze Protection in Cold Weather:

Operating your vehicle in temperatures below 4 degrees C (40 degrees F) using washer fluid without anti-freeze protection is dangerous as it could cause impaired windshield vision and result in an accident. In cold weather, always use washer fluid with anti-freeze protection.

NOTE

State or local regulations may restrict the use of volatile organic compounds (VOCs), which are commonly used as anti-freeze agents in washer fluid. A washer fluid with limited VOC content should be used only if it provides adequate freeze resistance for all regions and climates in which the vehicle will be operated.

Inspect fluid level in the washer fluid reservoir; add fluid if necessary.

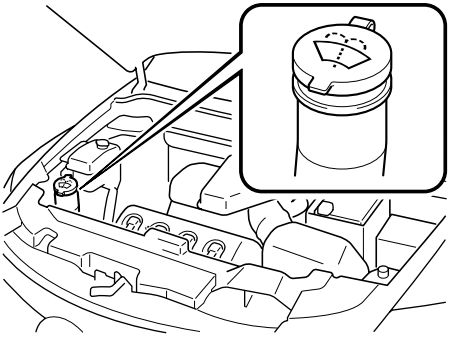

Use plain water if washer fluid is unavailable.
But use only washer fluid in cold weather to prevent it from freezing.

NOTE

Front and rear washer fluid is supplied from the same reservoir.

Body Lubrication

All moving points of the body, such as door and hood hinges and locks, should be lubricated each time the engine oil is changed. Use a nonfreezing lubricant on locks during cold weather.

Make sure the hood's secondary latch keeps the hood from opening when the primary latch is released.

Wiper Blades

⚠ CAUTION

- *Hot waxes applied by automatic car washers have been known to affect the wiper's ability to clean windows.*
- *To prevent damage to the wiper blades, don't use gasoline, kerosene, paint thinner, or other solvents on or near them.*

Contamination of either the windshield or the blades with foreign matter can reduce wiper effectiveness. Common sources are insects, tree sap, and hot wax treatments used by some commercial car washes.

If the blades are not wiping properly, clean the window and blades with a good cleaner or mild detergent; then rinse thoroughly with clean water. Repeat if necessary.

▼Replacing Windshield Wiper Blades

When the wipers no longer clean well, the blades are probably worn or cracked. Replace them.

⚠ CAUTION

To prevent damage to the wiper arms and other components, don't try to sweep the wiper arm by hand.

NOTE

To prevent damage to the wiper arm blades when raising both the driver and passenger side wiper arms, raise the driver side wiper arm first. Conversely, when setting down the wiper arms, set the passenger side wiper arm down first.

1. Raise the wiper arm.

2. Open the clip and slide the blade assembly in the direction of the arrow.
3. Wrap a flathead screwdriver or similar tool with a soft cloth to prevent damage to the clip.

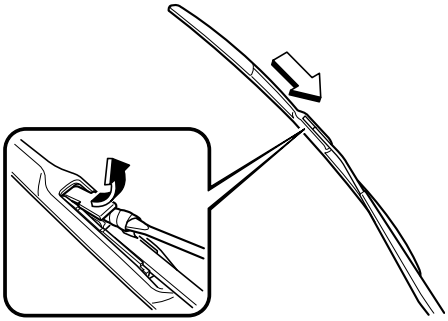

NOTE
Using a soft cloth-wrapped flathead screwdriver.

4. Tilt the blade assembly and remove it from the arm.

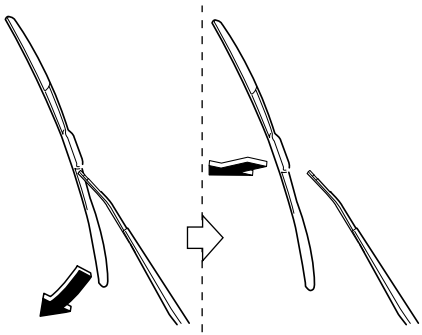

⚠ CAUTION

To prevent damage to the windshield let the wiper arm down easily, don't let it slap down on the windshield.

5. Pull down the blade rubber and slide it out of blade holder.

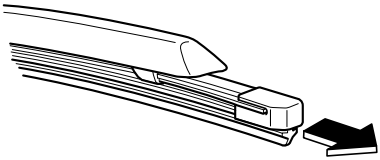

6. Remove the metal stiffeners from each blade rubber and install them in the new blade.

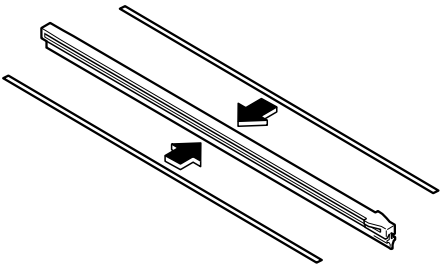

⚠ CAUTION

- *Don't bend or discard the stiffeners. You need to use them again.*
- *If the metal stiffeners are switched, the blade's wiping efficiency could be reduced. So don't use the driver's side metal stiffeners on the passenger's side, or vice versa.*
- *Be sure to reinstall the metal stiffeners in the new blade rubber so that the curve is the same as it was in the old blade rubber.*

7. Carefully insert the new blade rubber. Then install the blade assembly in the reverse order of removal.

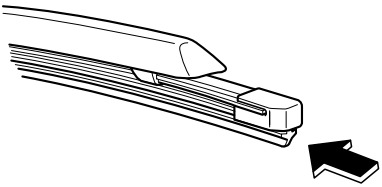

▼Replacing Rear Window Wiper Blade

When the wiper no longer cleans well, the blade is probably worn or cracked. Replace it.

⚠ CAUTION

To prevent damage to the wiper arm and other components, don't try to sweep the wiper arm by hand.

1. Remove the cover and raise the wiper arm.

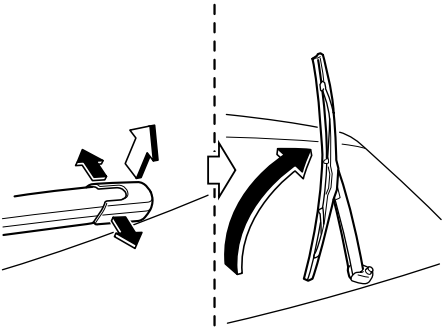

2. Firmly rotate the wiper blade to the right until it unlocks, then remove the blade.

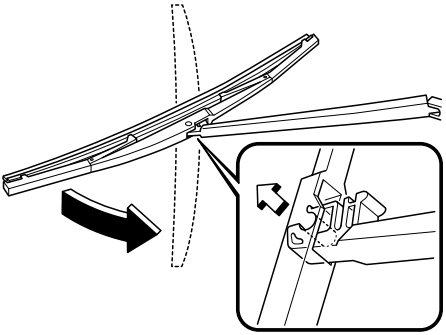

⚠ CAUTION

To prevent damage to the rear window let the wiper arm down easily, don't let it slap down on the rear window.

3. Pull down the blade rubber and slide it out of the blade holder.

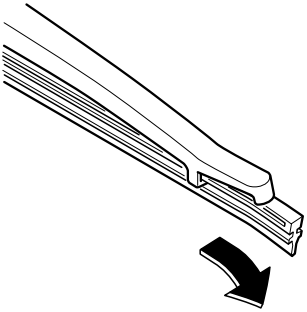

4. Remove the metal stiffeners from each blade rubber and install them in the new blade.

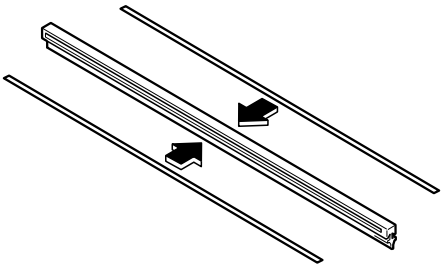

CAUTION

Don't bend or discard the stiffeners. You need to use them again.

5. Carefully insert the new blade rubber. Then install the blade assembly in the reverse order of removal.

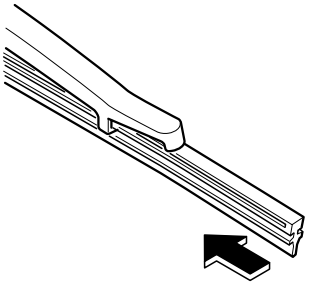

Battery

WARNING

Wash hands after handling the battery and related accessories:

Battery posts, terminals and related accessories contain lead and lead compounds, chemicals known to the State of California to cause cancer and reproductive harm.

Read the following precautions carefully before using the battery or inspecting to ensure safe and correct handling:

Always wear eye protection when working near the battery:

Working without eye protection is dangerous. Battery fluid contains SULFURIC ACID which could cause blindness if splashed into your eyes. Also, hydrogen gas produced during normal battery operation, could ignite and cause the battery to explode.

Wear eye protection and protective gloves to prevent contact with battery fluid:

Spilled battery fluid is dangerous.
Battery fluid contains SULFURIC ACID which could cause serious injuries if it gets in eyes, or on the skin or clothing. If this happens, immediately flush your eyes with water for 15 minutes or wash your skin thoroughly and get medical attention.

Always keep batteries out of the reach of children:

Allowing children to play near batteries is dangerous. Battery fluid could cause serious injuries if it gets in the eyes or on the skin.

Keep flames and sparks away from open battery cells and do not allow metal tools to contact the positive (+) or negative (–) terminal of the battery when working near a battery. Do not allow the positive (+) terminal to contact the vehicle body:

Flames and sparks near open battery cells are dangerous. Hydrogen gas, produced during normal battery operation, could ignite and cause the battery to explode. An exploding battery can cause serious burns and injuries. Keep all flames including cigarettes and sparks away from open battery cells.

Keep all flames, including cigarettes, and sparks away from open battery cells: *Flames and sparks near open battery cells are dangerous. Hydrogen gas, produced during normal battery operation, could ignite and cause the battery to explode. An exploding battery can cause serious burns and injuries.*

▼Battery Maintenance

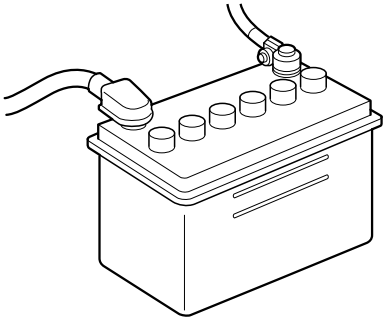

To get the best service from a battery:
- Keep it securely mounted.
- Keep the top clean and dry.
- Keep terminals and connections clean, tight, and coated with petroleum jelly or terminal grease.
- Rinse off spilled electrolyte immediately with a solution of water and baking soda.
- If the vehicle will not be used for an extended time, disconnect the battery cables.

Tires

For reasons of proper performance, safety, and better fuel economy, always maintain recommended tire inflation pressures and stay within the recommended load limits and weight distribution.

⚠ WARNING

Using Different Tire Types:

Driving your vehicle with different types of tires is dangerous. It could cause poor handling and poor braking; leading to loss of control. Except for the limited use of the temporary spare tire, use only the same type tires (radial, bias-belted, bias-type) on all four wheels.

Using Wrong-Sized Tires:

Using any other tire size than what is specified for your Mazda (page 10-6) is dangerous. It could seriously affect ride, handling, ground clearance, tire clearance, and speedometer calibration. This could cause you to have an accident. Use only tires that are the correct size specified for your Mazda.

▼Tire Inflation Pressure

⚠ WARNING

Always inflate the tires to the correct pressure:

Overinflation or underinflation of tires is dangerous. Adverse handling or unexpected tire failure could result in a serious accident.
Refer to specification charts on page 10-6.

The Tire Pressure Monitoring System* does not alleviate the need to check the tire condition every day, including whether the tires all look inflated properly. Inspect all tire pressure monthly (including the spare) when the tires are cold. Maintain recommended pressures for the best ride, handling, and minimum tire wear.
When checking the tire pressures, use of a digital tire pressure gauge is recommended.

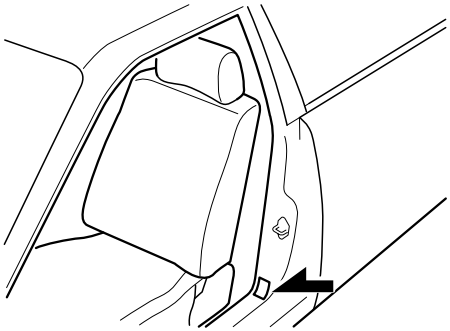

Refer to the specification charts (page 10-6).

*Some models.

NOTE

- *Always check tire pressure when tires are cold.*
- *Warm tires normally exceed recommended pressures. Don't release air from warm tires to adjust the pressure.*
- *Underinflation can cause reduced fuel economy, uneven and accelerated tire wear, and poor sealing of the tire bead, which will deform the wheel and cause separation of tire from rim.*
- *Overinflation can produce a harsh ride, uneven and accelerated tire wear, and a greater possibility of damage from road hazards.*
  Keep your tire pressure at the correct levels. If one frequently needs inflating, have it inspected.

▼Tire Rotation

To equalize tread wear, rotate the tires if irregular wear develops. According to the scheduled maintenance charts.Refer to Scheduled Maintenance on page 8-3. During rotation, inspect them for correct balance.

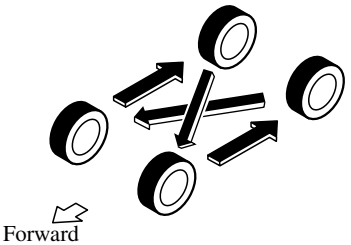

Do not include (TEMPORARY USE ONLY) spare tire in rotation.

Also, inspect them for uneven wear and damage. Abnormal wear is usually caused by one or a combination of the following:

- Incorrect tire pressure
- Improper wheel alignment
- Out-of-balance wheel
- Severe braking

After rotation, inflate all tire pressures to specification (page 10-6) and inspect the lug nuts for tightness.

⚠ CAUTION

Rotate unidirectional tires and radial tires that have an asymmetrical tread pattern or studs only from front to rear, not from side to side. Tire performance will be weakened if rotated from side to side.

⚠ CAUTION

Limited-Slip Differential system; don't use the following:

- *Tires not of the designated size*
- *Tires of different sizes or types at the same time*
- *Tires not sufficiently inflated*

If these instructions aren't followed, the rotation of the left and right wheels will be different and will thus apply a constant load on the limited-slip differential.
This will cause a malfunction.

▼Replacing a Tire

⚠ WARNING

Always use tires that are in good condition:

Driving with worn tires is dangerous. Reduced braking, steering, and traction could result in an accident.

CAUTION

(With Tire Pressure Monitoring System)
When replacing/repairing the tires or wheels or both, have the work done by an Authorized Mazda Dealer, or the tire pressure sensors may be damaged.

NOTE
(With Tire Pressure Monitoring System)
- *When tires with steel wire reinforcement in the sidewalls are used, the system may not function correctly even with a genuine wheel.*
  Refer to System Error Activation on page 5-31.
- *Be sure to install the tire pressure sensors whenever tires or wheels are replaced.*
  Refer to Tires and Wheels on page 5-31.

If a tire wears evenly, a wear indicator will appear as a solid band across the tread.
Replace the tire when this happens.

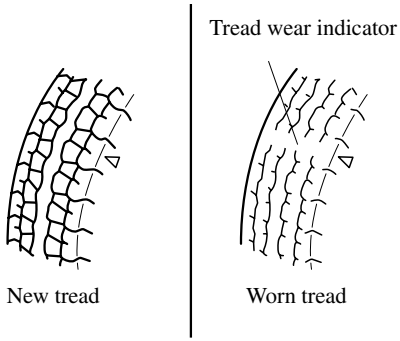

You should replace it before the band is across the entire tread.

NOTE
Tires degrade over time, even when they are not being used on the road. It is recommended that tires generally be replaced when they are 6 years or older. Heat caused by hot climates or frequent high loading conditions can accelerate the aging process. You should replace the spare tire when you replace the other road tires due to the aging of the spare tire. Regarding the manufacturing week and year is indicated with 4 digit.
Refer to The tire labeling on page 9-23.

▼Temporary Spare Tire

Inspect the temporary spare tire at least monthly to make sure it's properly inflated and stored.

NOTE
The temporary spare tire condition gradually deteriorates even if it has not been used.

The temporary spare tire is easier to handle because of its construction which is lighter and smaller than a conventional tire. This tire should be used only for an emergency and only for a short distance.

Use the temporary spare tire only until the conventional tire is repaired, which should be as soon as possible.

(Except Mexico)
Maintain its pressure at 420 kPa (4.2 kgf/cm^2 or bar, 60 psi).
(Mexico)
Maintain its pressure at 250 kPa (2.5 kgf/cm^2 or bar, 36 psi).

CAUTION

- *Do not use your temporary spare tire rim with a snow tire or a conventional tire. Neither will properly fit and could damage both tire and rim.*
- *The temporary spare tire has a tread life of less than 5,000 km (3,000 miles). The tread life may be shorter depending on driving conditions.*
- *The temporary spare tire is for limited use, however, if the tread wear solid-band indicator appears, replace the tire with the same type of temporary spare (page 8-34).*

NOTE

Tires degrade over time, even when they are not being used on the road. It is recommended that tires generally be replaced when they are 6 years or older. Heat caused by hot climates or frequent high loading conditions can accelerate the aging process. You should replace the spare tire when you replace the other road tires due to the aging of the spare tire. Regarding the manufacturing week and year is indicated with 4 digit.
Refer to The tire labeling on page 9-23.

▼Replacing a Wheel

WARNING

Always use wheels of the correct size on your vehicle:

Using a wrong-sized wheel is dangerous. Braking and handling could be affected, leading to loss of control and an accident.

CAUTION

- *A wrong-sized wheel may adversely affect:*
  - *Tire fit*
  - *Wheel and bearing life*
  - *Ground clearance*
  - *Snow-chain clearance*
  - *Speedometer calibration*
  - *Headlight aim*
  - *Bumper height*
  - *Tire Pressure Monitoring System*
  - *Limited-Slip Differential System*
- ***(With Tire Pressure Monitoring System)***
  - *When replacing/repairing the tires or wheels or both, have the work done by an Authorized Mazda Dealer, or the tire pressure sensors may be damaged.*
  - *The wheels equipped on your Mazda are specially designed for installation of the tire pressure sensors. Do not use non-genuine wheels, otherwise it may not be possible to install the tire pressure sensors.*

NOTE

Be sure to install the tire pressure sensors whenever tires or wheels are replaced. Refer to Tires and Wheels on page 5-31.

When replacing a wheel, make sure the new one is the same as the original factory wheel in diameter, rim width, and offset.

Proper tire balancing provides the best riding comfort and helps reduce tread wear. Out-of-balance tires can cause vibration and uneven wear, such as cupping and flat spots.

Light Bulbs

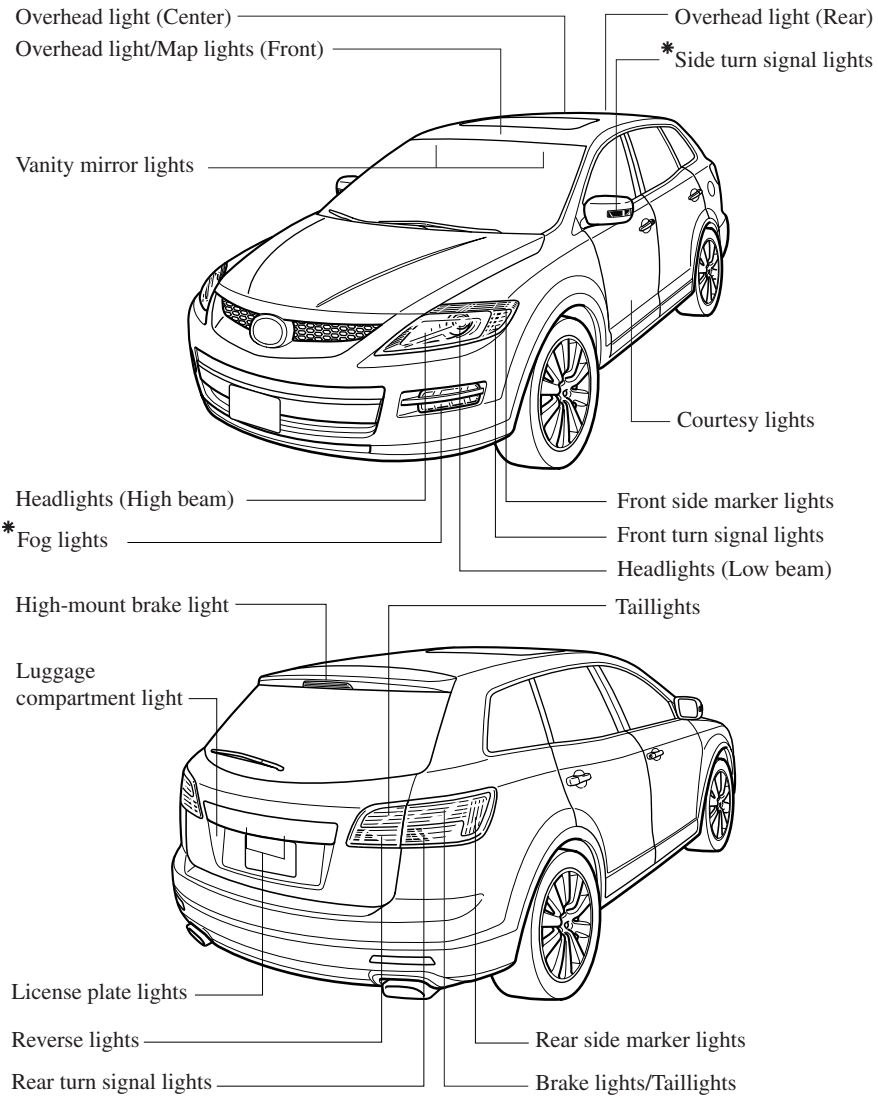

*Some models.

WARNING

Do not replace the xenon fusion bulbs yourself:

Replacing the xenon fusion bulbs yourself is dangerous. Because the xenon fusion bulbs require high voltage, you could receive an electric shock if the bulbs are handled incorrectly. Consult an Authorized Mazda Dealer when the replacement is necessary.

Never touch the glass portion of a halogen bulb with your bare hands and always wear eye protection when handling or working around the bulbs:

When a halogen bulb breaks, it is dangerous. These bulbs contain pressurized gas. If one is broken, it will explode and serious injuries could be caused by the flying glass. If the glass portion is touched with bare hands, body oil could cause the bulb to overheat and explode when lit.

Always keep halogen bulbs out of the reach of children:

Playing with a halogen bulb is dangerous. Serious injuries could be caused by dropping a halogen bulb or breaking it some other way.

▼Replacing Exterior Light Bulbs

Replacing a headlight bulb

High-beam bulb

1. Make sure the ignition switch is turned off and the headlight switch is off.
2. Lift the hood.
3. Turn the cover counterclockwise and remove it.

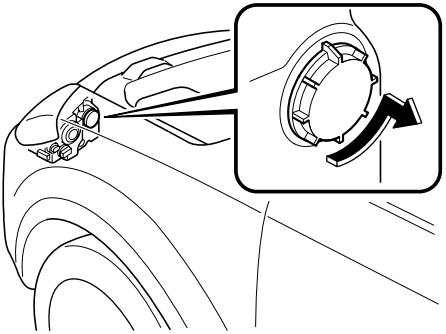

4. Disconnect the electrical connector from the bulb by pressing the tab on the connector with your finger and pulling the connector downward.
5. Turn the socket and bulb assembly to remove it. Carefully remove the bulb from its socket in the reflector by gently pulling it straight backward out of the socket.

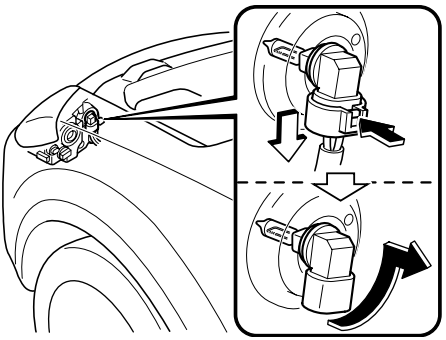

6. Install the new bulb in the reverse order of removal.

NOTE

- *To replace the bulb, contact an Authorized Mazda Dealer.*
- *If the halogen bulb is accidentally touched, it should be cleaned with rubbing alcohol before being used.*
- *Use the protective cover and carton of the replacement bulb to dispose of the old bulb promptly out of the reach of children.*

Low-beam bulb

(Xenon fusion bulb)
You cannot replace the low beam bulbs by yourself.
The bulbs must be replaced at an Authorized Mazda Dealer.
(Halogen bulbs)

1. Make sure the headlight switch is off.
2. Lift the hood.
3. Remove the attachment bolts and the coolant reservoir before replacing the light bulb.

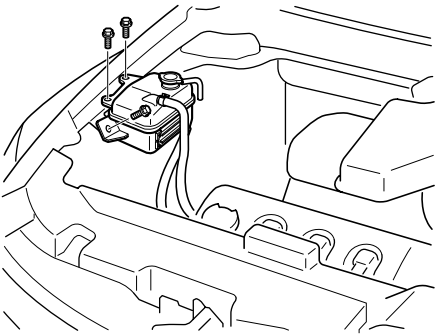

4. Turn the cover counterclockwise and remove it.

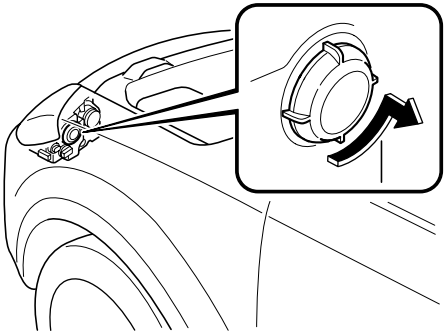

5. Disconnect the electrical connector from the bulb by pressing the tab on the connector with your finger and pulling the connector downward.
6. Turn the socket and bulb assembly to remove it. Carefully remove the bulb from its socket in the reflector by gently pulling it straight backward out of the socket.

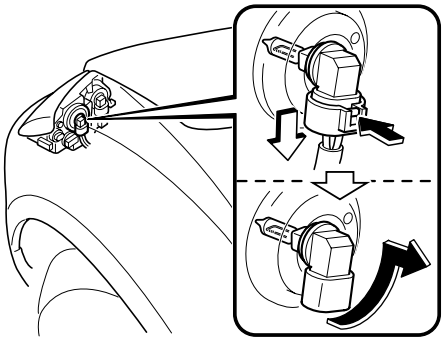

7. Install the new bulb in the reverse order of removal.

8. Install the coolant reservoir. If you are unsure of how tight the bolts should be, have them inspected at an Authorized Mazda Dealer.

Bolt tightening torque	
N·m (kgf·m, ft·lbf)	6.9—11.8 (0.7—1.2, 5.1—8.7)

NOTE

- *To replace the bulb, contact an Authorized Mazda Dealer.*
- *If the halogen bulb is accidentally touched, it should be cleaned with rubbing alcohol before being used.*
- *Use the protective cover and carton for the replacement bulb to dispose of the old bulb promptly and out of the reach of children.*

Front side marker lights, Front turn signal lights

1. Make sure the headlight switch is off.
2. Lift the hood.
3. Remove the attachment bolts and the coolant reservoir before replacing the light bulb.

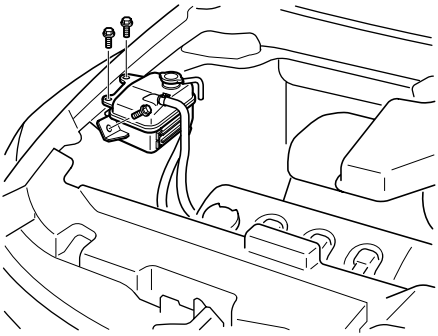

4. Turn the socket and bulb assembly counterclockwise and remove it.
5. Remove the bulb by pushing it in slightly and turning it counterclockwise.

Front side marker lights

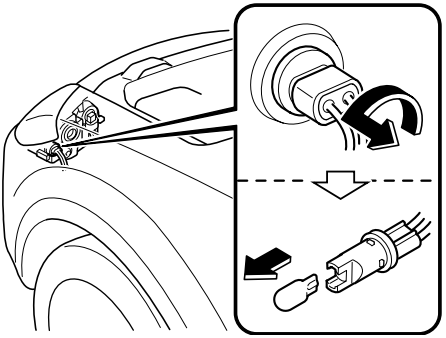

Front turn signal lights

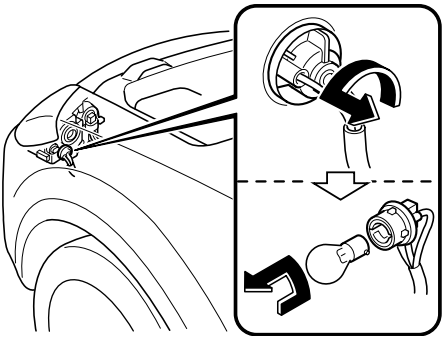

6. Install the new bulb in the reverse order of removal.
7. Install the coolant reservoir. If you are unsure of how tight the bolts should be, have them inspected at an Authorized Mazda Dealer.

Bolt tightening torque	
N·m (kgf·m, ft·lbf)	6.9—11.8 (0.7—1.2, 5.1—8.7)

Fog lights ✶

1. Make sure the headlight switch is off.
2. Turn the screws counterclockwise and remove them.

✶Some models.

3. Turn the screws and the center section of the plastic retainers counterclockwise and remove them, then remove the mudguard.

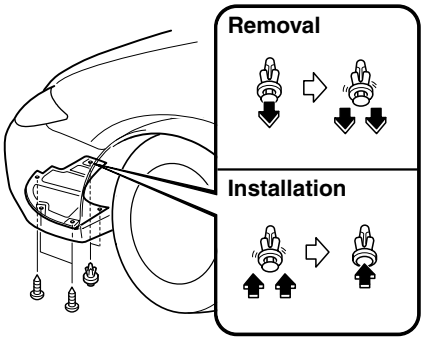

4. Disconnect the electrical connector from the bulb by pressing the tab on the connector with your finger and pulling the connector downward.
5. Turn the socket and bulb assembly counterclockwise and remove it. Carefully remove the bulb from its socket in the reflector by gently pulling it straight backward out of the socket.

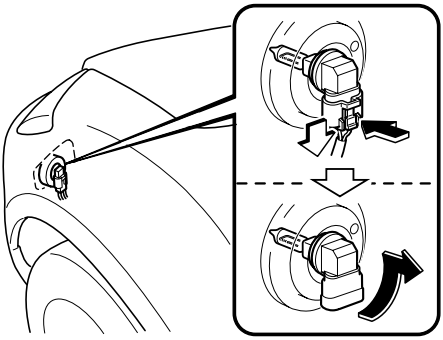

6. Install the new bulb in the reverse order of removal.

NOTE

- *To replace the bulb, contact an Authorized Mazda Dealer.*
- *If the halogen bulb is accidentally touched, it should be cleaned with rubbing alcohol before being used.*
- *Use the protective cover and carton for the replacement bulb to dispose of the old bulb promptly and out of the reach of children.*

Side turn signal lights*, Brake lights, Taillights (Rear combination light side), High-mount brake light

Due to the complexity and difficulty of the procedure, the LED bulbs should be replaced by an Authorized Mazda Dealer.

NOTE

LED bulb replacement is not possible. The rear combination component must be replaced.

Rear turn signal lights/Rear side-marker light

1. Turn the bolts counterclockwise and remove them.

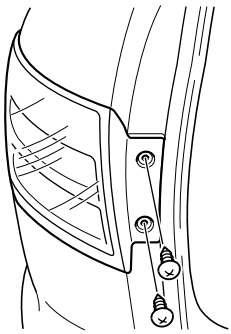

*Some models.

2. Pull the unit rearward to remove it.

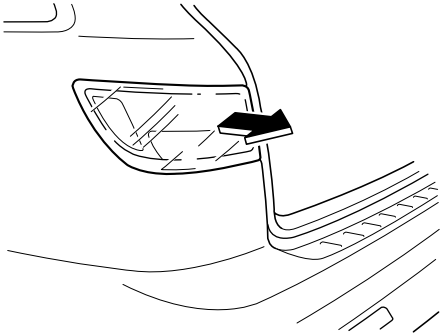

3. Turn the socket and bulb assembly counterclockwise and remove it.

① **Rear direction indication light**
② **Rear side-maker light**

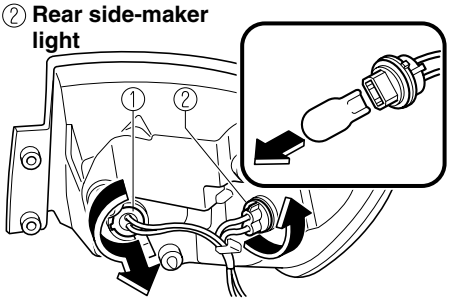

4. Disconnect the bulb from the socket.
5. Install the new bulb in the reverse order of removal.

Taillights (Liftgate side), Reverse lights

1. Remove the cover.

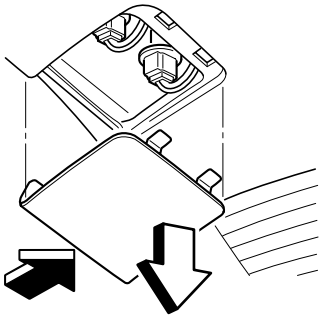

2. Turn the socket and bulb assembly counterclockwise and remove it.
3. Disconnect the bulb from the socket.

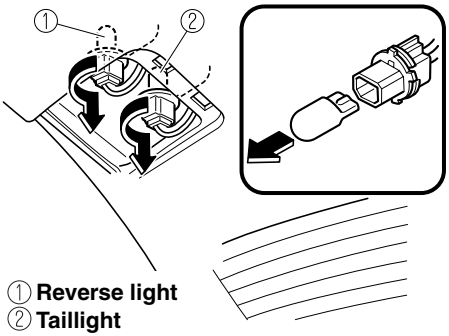

① **Reverse light**
② **Taillight**

4. Install the new bulb in the reverse order of removal.

NOTE
To replace the bulb, contact an Authorized Mazda Dealer.

License plate lights

1. Wrap a flathead screwdriver with a soft cloth to prevent damage to the lens and remove the lens by carefully prying on the edge of the lens with a flathead screwdriver.

2. Disconnect the bulb by pulling it out.

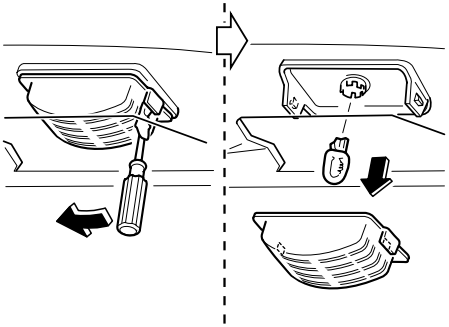

3. Install the new bulb in the reverse order of removal.

▼Replacing Interior Light Bulbs

Overhead light/Map lights (Front), Overhead light (Center, Rear), Luggage compartment light, Courtesy lights, Vanity mirror lights

1. Wrap a small flathead screwdriver with a soft cloth to prevent damage to the lens and remove the lens by carefully prying on the edge of the lens with the flathead screwdriver.
2. Disconnect the bulb by pulling it out.

Overhead light/Map lights (Front)

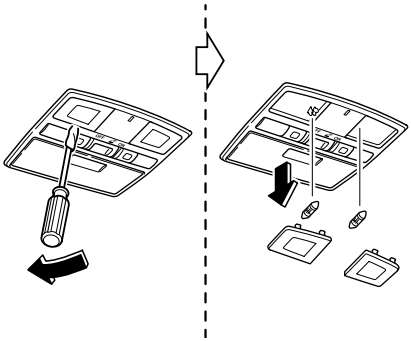

Overhead light (Center, Rear)

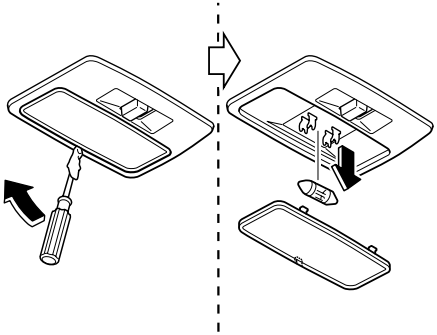

Luggage compartment light

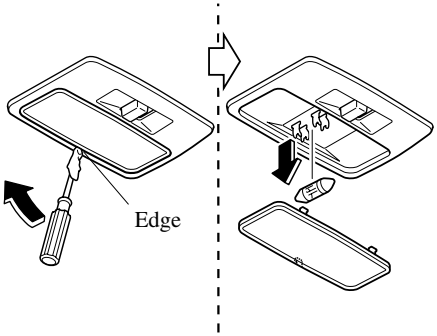

Courtesy lights

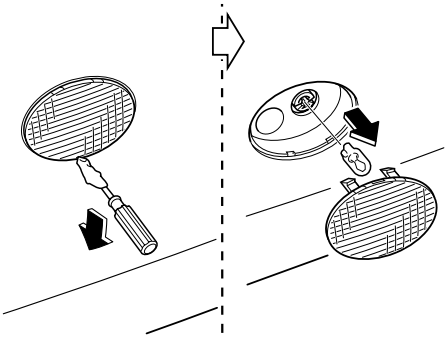

Vanity mirror lights

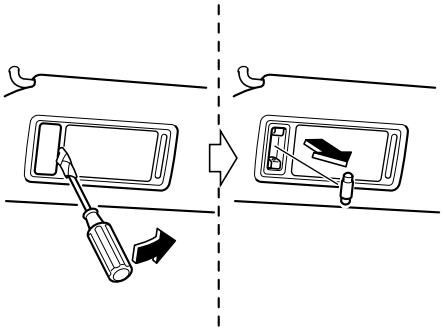

3. Install the new bulb in the reverse order of removal.

Fuses

Your vehicle's electrical system is protected by fuses.

If any lights, accessories, or controls don't work, inspect the appropriate circuit protector. If a fuse has blown, the inside element will be melted.

If the same fuse blows again, avoid using that system and consult an Authorized Mazda Dealer as soon as possible.

▼Fuse Replacement

Replacing fuses located behind the glove compartment

If an electrical system is inoperative, inspect the fuses located behind the glove compartment.

1. Turn off the ignition switch and other switches.
2. Open the glove compartment.
3. Remove the cover.

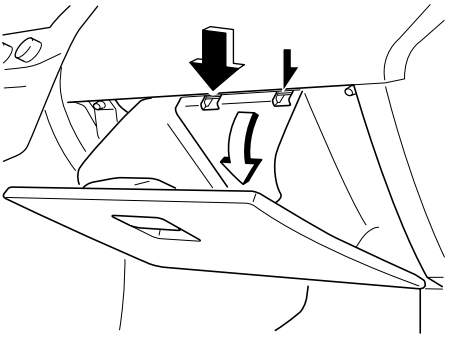

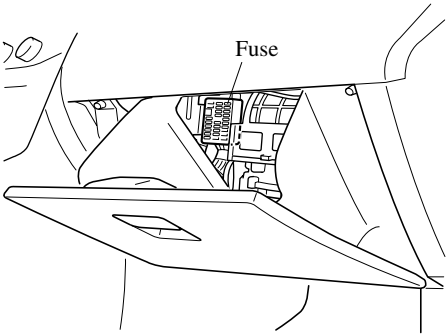

4. Pull the fuse straight out with the fuse puller provided on the fuse block located in the engine compartment.

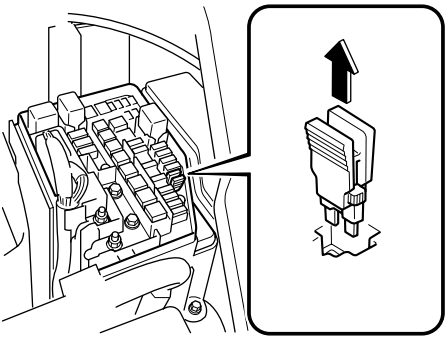

5. Inspect the fuse and replace it if it's blown.

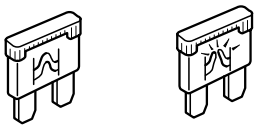

Normal Blown

6. Insert a new fuse of the same amperage rating, and make sure it fits tightly. If it does not fit tightly, have an expert install it. We recommend an Authorized Mazda Dealer.
   If you have no spare fuses, borrow one of the same rating from a circuit not essential to vehicle operation, such as the ROOM circuit.

⚠ CAUTION

Always replace a fuse with one of the same rating. Otherwise you may damage the electric system.

Replacing the fuses under the hood

If the headlights or other electrical components do not work and the fuses in the cabin are normal, inspect the fuse block under the hood. If a fuse is blown, it must be replaced. Follow these steps:

1. Turn off the ignition switch and all other switches.
2. Remove the fuse block cover or the relay box cover.

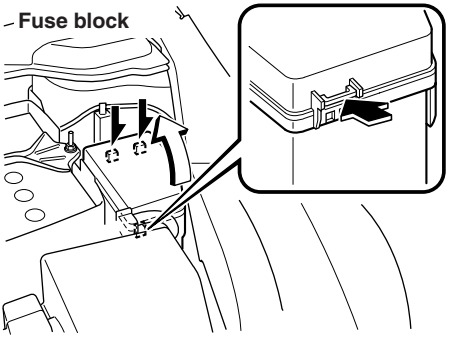

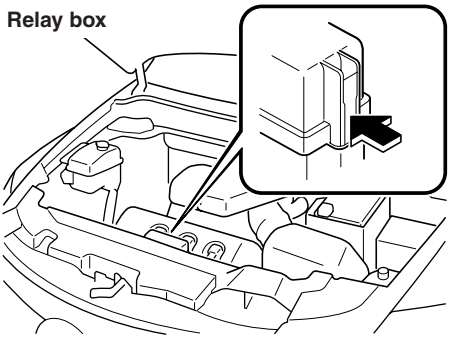

3. If any fuse but the MAIN fuse is blown, replace it with a new one **of the same amperage rating**.

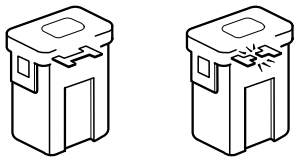

Normal Blown

⚠ WARNING

Do not replace the main fuse by yourself. Have an Authorized Mazda Dealer perform the replacement:

Replacing the fuse by yourself is dangerous because the MAIN fuse is a high current fuse. Incorrect replacement could cause an electrical shock or a short circuit resulting in a fire.

▼Fuse Panel Description

Fuse block (Engine compartment)

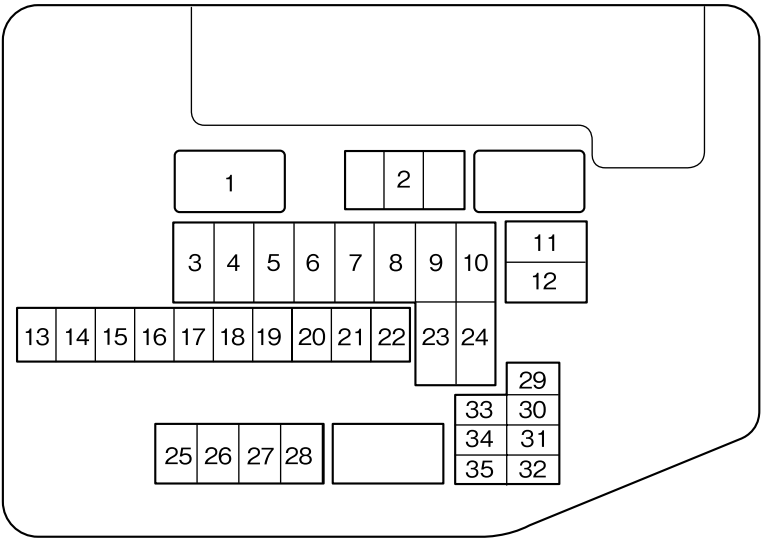

DESCRIPTION		FUSE RATING	PROTECTED COMPONENT
1	MAIN	150A	For protection of all circuits
2	ENGINE	20A	Transaxle control system
3	R HEATER	40A	Heater
4	P.SEAT R	30A	Power seat (RH)*
5	HEATER	50A	Heater
6	IGKEY2	40A	For protection of various circuits
7	FAN1	30A* 40A*	Cooling fan
8	P.SEAT L	40A	Power seat (LH)*
9	DEFOG	30A	Rear window defroster
10	BTN	40A	For protection of various circuits
11	FUEL PUMP	30A	Fuel pump
12	IGKEY1	30A	For protection of various circuits
13	FOG	15A	Fog lights*
14	ABS (SOL)	30A	ABS solenoid
15	D/L	25A	Power door locks
16	ROOM	15A	Overhead light

*Some models.

DESCRIPTION		FUSE RATING	PROTECTED COMPONENT
17	OUTLET CTR	15A	Accessory socket (Center)
18	OUTLET RR	15A	Accessory socket (Rear)
19	AC PWR	15A	Moon roof*, DC/AC inverter
20	S.WARM	15A	Seat warmer*
21	A/C MAG	10A	Air conditioner
22	BOSE	25A	Audio system (Bose® Sound System-equipped model)*
23	FAN2	30A*	Cooling fan
		40A*	
24	ABS	50A	ABS
25	IG COIL	25A	Ignition system
26	H/L LOW L	15A	Headlight-left (Low beam)
27	H/L LOW R	15A	Headlight-right (Low beam)
28	H/L HIGH	20A	Headlight-high (High beam)
29	HAZARD	15A	Hazard warning flashers
30	ENG +B	10A	PCM
31	HORN	15A	Horn
32	STOP	7.5A	Brake lights
33	EGI INJ	10A	Engine control system
34	ENG BAR	20A	Air flow sensor, EGR control valve
35	ENG BAR 2	7.5A	PCM

*Some models.

Relay box (Engine compartment)*

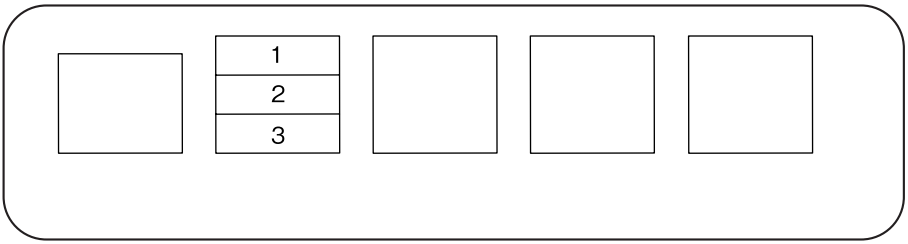

DESCRIPTION		FUSE RATING	PROTECTED COMPONENT
1	INJ	7.5A	Injectors
2	—	—	—
3	—	—	—

*Some models.

Fuse block (Glove box)

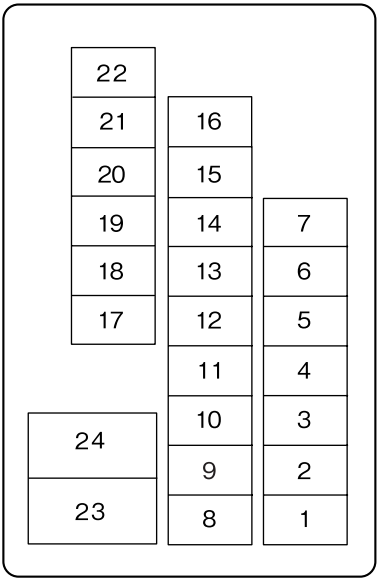

DESCRIPTION		FUSE RATING	PROTECTED COMPONENT
1	OUTLET FR	15A	Accessory Socket (Front)
2	MIRROR	7.5A	Power control mirror
3	—	—	—
4	METER	10A	Instrument cluster
5	SAS	7.5A	ABS, Air bag
6	ENG.IGA	7.5A	Engine control system
7	STA	7.5A	Ignition system
8	—	—	—
9	A/C	7.5A	Air conditioner
10	R.WIPER	15A	Rear window wiper and washer
11	—	—	—
12	P.LIFT GATE	20A	Power lift gate*
13	SUNROOF	15A	Moonroof*
14	AUDIO	10A	Audio system
15	M.DEF	10A	Mirror defroster*
16	—	—	—
17	TAIL	10A	Taillight
18	ILLUMI	10A	Dashboard illumination
19	INJ	7.5A	Injectors

*Some models.

DESCRIPTION		FUSE RATING	PROTECTED COMPONENT
20	—	—	—
21	OUTLET CTR	—	—
22	OUTLET RR	—	—
23	WIPER	30A	Windshield wiper and washer
24	P.WIND	30A	Power windows

How to Minimize Environmental Paint Damage

The paintwork on your Mazda represents the latest technical developments in composition and methods of application.

Environmental hazards, however, can harm the paint's protective properties, if proper care is not taken.

Here are some examples of possible damage, with tips on how to prevent them.

▼Etching Caused by Acid Rain or Industrial Fallout

Occurrence

Industrial pollutants and vehicle emissions drift into the air and mix with rain or dew to form acids. These acids can settle on a vehicle's finish. As the water evaporates, the acid becomes concentrated and can damage the finish.
And the longer the acid remains on the surface, the greater the chance is for damage.

Prevention

It is necessary to wash and wax your vehicle to preserve its finish according to the instructions in this section. These steps should be taken immediately after you suspect that acid rain has settled on your vehicle's finish.

▼Damage Caused by Bird Dropping, Insects, or Tree Sap

Occurrence

Bird droppings contain acids. If these aren't removed they can eat away the clear and color base coat of the vehicle's paintwork.

When insects stick to the paint surface and decompose, corrosive compounds form. These can erode the clear and color base coat of the vehicle's paintwork if they are not removed.

Tree sap will harden and adhere permanently to the paint finish. If you scratch the sap off while it is hard, some vehicle paint could come off with it.

Prevention

It is necessary to have your Mazda washed and waxed to preserve its finish according to the instructions in this section. This should be done as soon as possible.

Bird droppings can be removed with a soft sponge and water. If you are traveling and these are not available, a moistened tissue may also take care of the problem. The cleaned area should be waxed according to the instructions in this section.
Insects and tree sap are best removed with a soft sponge and water or a commercially available chemical cleaner.

Another method is to cover the affected area with dampened newspaper for one to two hours. After removing the newspaper, rinse off the loosened debris with water.

▼Water Marks

Occurrence

Rain, fog, dew, and even tap water can contain harmful minerals such as salt and lime. If moisture containing these minerals settles on the vehicle and evaporates, the minerals will concentrate and harden to form white rings. The rings can damage your vehicle's finish.

Prevention

It is necessary to wash and wax your vehicle to preserve its finish according to the instructions in this section. These steps should be taken immediately after you find water marks on your vehicle's finish.

▼Paint Chipping

Occurrence

Paint chipping occurs when gravel thrown in the air by another vehicle's tires hits your vehicle.

How to avoid paint chipping

Keeping a safe distance between you and the vehicle ahead reduces the chances of having your paint chipped by flying gravel.

NOTE

- *The paint chipping zone varies with the speed of the vehicle. For example, when traveling at 90 km/h (56 mph), the paint chipping zone is 50 m (164 ft).*
- *In low temperatures a vehicle's finish hardens. This increases the chance of paint chipping.*
- *Chipped paint can lead to rust forming on your Mazda. Before this happens, repair the damage by using Mazda touch-up paint according to the instructions in this section. Failure to repair the affected area could lead to serious rusting and expensive repairs.*

Exterior Care

Follow **all** label and container directions when using a chemical cleaner or polish. Read all warnings and cautions.

▼Maintaining the Finish

Washing

To help protect the finish from rust and deterioration, wash your Mazda thoroughly and frequently, at least once a month, with lukewarm or cold water.

If the vehicle is washed improperly, the paint surface could be scratched. Here are some examples of how scratching could occur.

Scratches occur on the paint surface when:
- The vehicle is washed without first rinsing off dirt and other foreign matter.
- The vehicle is washed with a rough, dry, or dirty cloth.
- The vehicle is washed at a car wash that uses brushes that are dirty or too stiff.
- Cleansers or wax containing abrasives are used.

NOTE
- *Mazda is not responsible for scratches caused by automatic car washes or improper washing.*
- *Scratches are more noticeable on vehicles with darker paint finishes.*

To minimize scratches on the vehicle's paint finish:
- Rinse off any dirt or other foreign matter using lukewarm or cold water before washing.
- Use plenty of lukewarm or cold water and a soft cloth when washing the vehicle. Do not use a nylon cloth.
- Rub gently when washing or drying the vehicle.
- Take your vehicle only to a car wash that keeps its brushes well maintained.
- Don't use abrasive cleansers or wax that contain abrasives.

⚠ CAUTION

➢ *Don't use steel wool, abrasive cleaners, or strong detergents containing highly alkaline or caustic agents on chrome-plated or anodized aluminum parts. This may damage the protective coating; also, cleaners and detergents may discolor or deteriorate the paint.*

➢ *To prevent damaging the antenna, remove it before entering a car wash facility or passing beneath a low overhead clearance.*

Pay special attention to removing salt, dirt, mud, and other foreign material from the underside of the fenders, and make sure the drain holes in the lower edges of the doors and rocker panels are clean.

Insects, tar, tree sap, bird droppings, industrial fallout, and similar deposits can damage the finish if not removed immediately. When prompt washing with plain water is ineffective, use a mild soap made for use on vehicles.

Thoroughly rinse off all soap with lukewarm or cold water. Don't allow soap to dry on the finish.

After washing the vehicle, dry it with a clean chamois to prevent water spots from forming.

⚠ WARNING

Dry wet brakes by driving very slowly and applying the brakes lightly until brake performance is normal:

Driving with wet brakes is dangerous. Increased stopping distance or the vehicle pulling to one side when braking could result in a serious accident. Light braking will indicate whether the brakes have been affected.

Waxing

Your vehicle needs to be waxed when water no longer beads on the finish. Always wash and dry the vehicle before waxing it. In addition to the vehicle body, wax the metal trim to maintain its luster.

1. Use wax which contains no abrasives. Waxes containing abrasive will remove paint and could damage bright metal parts.
2. Use a good grade of natural wax for metallic, mica, and solid colors.
3. When waxing, coat evenly with the sponge supplied or a soft cloth.
4. Wipe off the wax with a soft cloth.

NOTE

A spot remover to remove oil, tar, and similar materials will usually also take off the wax. Rewax these areas even if the rest of the vehicle doesn't need it.

▼Repairing Damage to the Finish

Deep scratches or chips on the finish should be repaired promptly. Exposed metal quickly rusts and can lead to major repairs.

⚠ CAUTION

If your Mazda is damaged and needs metal parts repaired or replaced, make sure the body shop applies anti-corrosion materials to all parts, both repaired and new. This will prevent them from rusting.

▼Paint Damage Touch-up

Repair damage to the finish caused by stone chipping, damage during parking etc., by using Mazda touch-up paint before rust begins to form. First, remove the dirt and grease with a clean soft cloth.

If rust has already begun to form:

1. Remove rust completely with sandpaper.
2. Wipe with a clean soft cloth.
3. Apply rust preventive primer to the area.
4. After drying it completely, apply a suitable top coat material to the area.

Of course there will be no problem if you assign the work to an Authorized Mazda Dealer.

▼Cavity Protection

Cavities are treated for protection at the factory, but additional protective treatment after the vehicle has been put into use will extend the life of the body.
We recommend that you consult an Authorized Mazda Dealer concerning this additional precaution.

▼Bright-Metal Maintenance

- Use tar remover to remove road tar and insects. Never do this with a knife or similar tool.
- To prevent corrosion on bright-metal surfaces, apply wax or chrome preservative and rub it to a high luster.
- During cold weather or in coastal areas, cover bright-metal parts with a coating of wax or preservative heavier than usual. It would also help to coat them with noncorrosive petroleum jelly or some other protective compound.

⚠ CAUTION

Don't use steel wool, abrasive cleaners, or strong detergents containing highly alkaline or caustic agents on chrome-plated or anodized aluminum parts. This may result in damage to the protective coating and cause discoloration or paint deterioration.

▼Underbody Maintenance

Road chemicals and salt used for ice and snow removal and solvents used for dust control may collect on the underbody. If not removed, they will speed up rusting and deterioration of such underbody parts as fuel lines, frame, floor pan, and exhaust system, even though these parts may be coated with anti-corrosive material.

Thoroughly flush the underbody and wheel housings with lukewarm or cold water at the end of each winter. Try also to do this every month.

Pay special attention to these areas because they easily hide mud and dirt. **It will do more harm than good to wet down the road grime without removing it.**

The lower edges of doors, rocker panels, and frame members have drain holes that should not be clogged. Water trapped there will cause rusting.

⚠ WARNING

Dry wet brakes by driving very slowly and applying the brakes lightly until brake performance is normal:

Driving with wet brakes is dangerous. Increased stopping distance or the vehicle pulling to one side when braking could result in a serious accident. Light braking will indicate whether the brakes have been affected.

▼Undercoating

This special coating is applied to the critical parts of the underside to protect vehicles from damage caused by chemicals or stones. This coating is liable to be damaged with time. Check this coating periodically.

An Authorized Mazda Dealer are well informed on how repairs should be made. Consult an Authorized Mazda Dealer.

▼Aluminum Wheel Maintenance

A protective coating is provided over the aluminum wheels. Special care is needed to protect this coating.

NOTE

- *Don't use a wire brush or any abrasive cleaner, polishing compound, or solvent on aluminum wheels. They may damage the coating.*
- *Only use a mild soap or neutral detergent and always use a sponge or soft cloth to clean the wheels.*
  Rinse thoroughly with lukewarm or cold water. Also, be sure to clean the wheels after driving on dusty or salted roads. This helps prevent corrosion.
- *Avoid washing your vehicle in an automatic car wash that uses high-speed or hard brushes.*
- *If your aluminum wheels lose luster, wax the wheels.*

Interior Care

▼Dashboard Precautions

Prevent caustic solutions such as perfume and cosmetic oils from contacting the dashboard. They'll damage and discolor it. If these solutions get on the dashboard, wipe them off immediately.

⚠ CAUTION

Do not use glazing agents.
Glazing agents contain ingredients which may cause discoloration, wrinkling, cracks and peeling.

▼Cleaning the Upholstery and Interior Trim

Vinyl

Remove dust and loose dirt from vinyl with a whisk broom or vacuum cleaner. Clean vinyl with a leather-and-vinyl cleaner.

Leather*

Real leather isn't uniform and may have scars, scratches, and wrinkles. Clean it with a leather cleaner or mild soap.

Wipe it with a **damp** soft cloth; then dry and buff it with a **dry** soft cloth.

Fabric

Remove dust and loose dirt from fabric with a whisk broom or vacuum cleaner. Clean it with a mild soap solution good for upholstery and carpets. Remove fresh spots immediately with a fabric spot cleaner.

*Some models.

To keep the fabric looking clean and fresh, take care of it. Otherwise its color will be affected, it can be stained easily, and its fire-resistance may be reduced.

CAUTION

Use only recommended cleaners and procedures. Others may affect appearance and fire-resistance.

Piano black panel*

The following parts are fitted with panels that have been treated with a special coating that resists scratching.

- Center panel
- Steering wheel (partial)
- Shift lever panel
- Door trim panel

When the panel needs to be cleaned, use a soft cloth to wipe off dirt from the surface.

NOTE

Scratches or nicks on the panels resulting from the use of a hard brush or cloth may not be repairable.

▼Cleaning the Lap/Shoulder Belt Webbing

Clean the webbing with a mild soap solution recommended for upholstery or carpets. Follow instructions. Don't bleach or dye the webbing; this may weaken it.

After cleaning the belts, thoroughly dry the belt webbing and make sure there is no remaining moisture before retracting them.

WARNING

Have an Authorized Mazda Dealer replace damaged seat belts immediately:

Using damaged seat belts is dangerous. In a collision, damaged belts cannot provide adequate protection.

▼Cleaning the Window Interiors

If the windows become covered with an oily, greasy, or waxy film, clean them with glass cleaner. Follow the directions on the container.

CAUTION

Don't scrape or scratch the inside of the rear window. You may damage the rear window defroster grid.

*Some models.

9 Customer Information and Reporting Safety Defects

Important consumer information including warranties and add-on equipment.

Customer Assistance 9-2
Customer Assistance (U.S.A.) 9-2
Customer Assistance (Canada) 9-4
Customer Assistance (Puerto Rico) 9-7
Customer Assistance (Mexico) 9-8

Mazda Importer/Distributors 9-10
Importer/Distributor 9-10
Distributor in Each Area 9-10

Warranty 9-12
Warranties for Your Mazda 9-12
Outside the United States and Canada 9-13
Outside the United States 9-14
Outside Canada 9-15
Registering Your Vehicle in A Foreign Country (Except United States and Canada) 9-16
Add-On Non-Genuine Parts and Accessories 9-17

Cell Phones 9-18
Cell Phones Warning 9-18

Type Approval of Equipment 9-19
Type Approval of Equipment (Mexico) 9-19

Uniform Tire Quality Grading System (UTQGS) 9-21
Uniform Tire Quality Grading System (UTQGS) 9-21

Tire Information (except Canada) 9-23
Tire Labeling 9-23
Location of the Tire Label (Placard) 9-29
Tire Maintenance 9-32
Vehicle Loading 9-35
Steps for Determining the Correct Load Limit: 9-42

Reporting Safety Defects 9-43
Reporting Safety Defects (U.S.A.) 9-43
Reporting Safety Defects (Canada) ... 9-44

Service Publications 9-45
Service Publications 9-45

Customer Assistance (U.S.A.)

Your complete and permanent satisfaction is our business. We are here to serve you. All Authorized Mazda Dealers have the knowledge and the tools to keep your Mazda vehicle in top condition.
If you have any questions or recommendations for improvement regarding the service of your Mazda vehicle or servicing by Mazda Dealer personnel, we recommend that you take the following steps:

NOTE
If it becomes necessary to have the components or wiring system for the supplementary restraint system modified to accommodate a person with certain medical conditions in accordance with a certified physician, contact an Authorized Mazda Dealer.

▼STEP 1: Contact Your Mazda Dealer

Discuss the matter with an Authorized Mazda Dealer. This is the quickest and best way to address the issue.

- If your concern has not been resolved by the CUSTOMER RELATIONS, SALES, SERVICE, or PARTS MANAGER, then please contact the GENERAL MANAGER of the dealership or the OWNER.
- If it becomes necessary to have the components or wiring system for the supplementary restraint system modified to accommodate a person with certain medical conditions in accordance with a certified physician, go to STEP2.

▼STEP 2: Contact Mazda North American Operations

If for any reason you feel the need for further assistance after contacting your dealership management and it becomes necessary to have the components or wiring system for the supplementary restraint system modified to accommodate a person with certain medical conditions in accordance with a certified physician, you can reach Mazda North American Operations by one of the following ways.

Log on: at www.mazdaUSA.com

Answers to many questions, including how to locate or contact a local Mazda dealership in the U.S., can be found here.

E-mail: click on “Contact Us” at the bottom of the page at www.mazdaUSA.com

By phone at: 1 (800) 222-5500

By letter at:
Attn: Customer Assistance
Mazda North American Operations
7755 Irvine Center Drive
Irvine, CA 92618-2922
P.O. Box 19734
Irvine, CA 92623-9734

In order to serve you efficiently and effectively, please help us by providing the following information:

1. Your name, address, and telephone number
2. Year and model of vehicle
3. Vehicle Identification Number (17 digits, noted on your registration or title or located on the upper driver's side corner of the dash)
4. Purchase date and current mileage
5. Your dealer's name and location
6. Your question(s)

If you live outside the U.S.A., please contact your nearest Mazda Distributor.

Customer Assistance (Canada)

▼Satisfaction Review Process

Your complete and permanent satisfaction is of primary concern to Mazda. All Authorized Mazda Dealers have both the knowledge and tools to keep your Mazda in top condition. In our experience, any questions, problems, or complaints regarding the operation of your Mazda or any other general service transactions are most effectively resolved by your dealer. If the cause of your dissatisfaction cannot adequately be addressed by normal dealership procedures, we recommend that you take the following steps:

▼STEP 1: Contact the Mazda Dealer

Discuss the matter with a member of dealership management. If the Service Manager has already reviewed your concerns, contact the owner of the dealership or its General Manager.

▼STEP 2: Contact the Mazda Regional Office

If you feel that you still require assistance, ask the dealer Service Manager to arrange for you to meet the local Mazda Service Representative. If more expedient, contact Mazda Canada Inc.Regional Office nearest you for such arrangements. Regional Office address and phone numbers are shown (page 9-6).

▼STEP 3: Contact the Mazda Customer Relations Department

If still not substantially satisfied, contact the Customer Relations Department, Mazda Canada Inc., 55 Vogell Road, Richmond Hill, Ontario, L4B 3K5 Canada TEL: 1 (800) 263-4680.
Provide the Department with the following information:

1. Your name, address and telephone number
2. Year and model of vehicle
3. Vehicle Identification Number (VIN). Refer to the “Vehicle Identification Labels” page of section 10 of this manual for the location of the VIN.
4. Purchase date
5. Present odometer reading
6. Your dealer's name and location
7. The nature of your problem and/or cause of dissatisfaction

The Department, in cooperation with the local Mazda Service Representative, will review the case to determine if everything possible has been done to ensure your satisfaction.

Please recognize that the resolution of service problems in most cases requires the use of your Mazda dealer's service facilities, personnel and equipment. We urge you to follow the above three steps in sequence for most effective results.

▼Mediation/Arbitration Program

Occasionally a customer concern cannot be resolved through Mazda's Customer Satisfaction Program. If after exhausting the procedures in this manual your concern is still not resolved, you have another option.

Mazda Canada Inc. participates in an arbitration program administered by the Canadian Motor Vehicle Arbitration Plan (CAMVAP). CAMVAP will advise you about how your concern may be reviewed and resolved by an independent third party through binding arbitration.

Your complete satisfaction is the goal of Mazda Canada Inc. and our dealers. Mazda's participation in CAMVAP makes a valuable contribution to our achieving that goal. There is no charge for using CAMVAP. CAMVAP results are fast, fair and final as the award is binding on both you and Mazda Canada Inc.

▼Canadian Motor Vehicle Arbitration Plan (CAMVAP)

If a specific item of concern arises, where a solution cannot be reached between an owner, Mazda, and/or one of it's dealers (that all parties cannot agree upon), the owner may wish to use the services offered by the Canadian Motor Vehicle Arbitration Plan (CAMVAP).

CAMVAP uses the services of Provincial Administrators to assist consumers in scheduling and preparing for their arbitration hearings. However, before you can proceed with CAMVAP you must follow your Mazda dispute resolution process as outlined previously.

Customer Assistance

CAMVAP is fully implemented in all provinces and territories.
Consumers wishing to obtain further information about the Program should contact the Provincial Administrator at 1 (800) 207-0685, or by contacting the Canadian Motor Vehicle Arbitration Plan Office at:

Canadian Motor Vehicle Arbitration Plan
235 Yorkland Boulevard, suite 300
North York, Ontario
M2J 4Y8
http://camvap.ca

Provincial Administrators may be reached locally as listed below:

Province/Territory	CAMVAP Number
British Columbia & Yukon Territories	1 (800) 207-0685
Alberta & Northwest Territories	1 (800) 207-0685
Saskatchewan	1 (800) 207-0685
Manitoba	1 (800) 207-0685
Ontario	1 (800) 207-0685
Atlantic Canada	1 (800) 207-0685
Quebec	1 (800) 207-0685

▼Regional Offices

REGIONAL OFFICES	AREAS COVERED
MAZDA CANADA INC. WESTERN REGION 8171 ACKROYD ROAD SUITE 2000 RICHMOND B.C. V6X 3K1 (604) 303-5670	ALBERTA, BRITISH COLUMBIA, MANITOBA, SASKATCHEWAN, YUKON
MAZDA CANADA INC. CENTRAL/ATLANTIC REGION 55 VOGELL ROAD, RICHMOND HILL, ONTARIO, L4B 3K5 (905) 787-7000	ONTARIO
MAZDA CANADA INC. QUEBEC REGION 6111 ROUTE TRANS CANADIENNE POINTE CLAIRE, QUEBEC H9R 5A5 (514) 694-6390	QUEBEC, NEW BRUNSWICK, NOVA SCOTIA, PRINCE EDWARD ISLAND, NEWFOUNDLAND

Customer Assistance (Puerto Rico)

Your complete and permanent satisfaction is our business. That is why all Authorized Mazda Dealers have the knowledge and the tools to keep your Mazda vehicle in top condition.
If you have any questions or recommendations for improvement regarding the service of your Mazda vehicle or servicing by Mazda Dealer personnel, we recommend that you take the following steps:

▼STEP 1

Discuss the matter with an Authorized Mazda Dealer. This is the quickest and best way to address the issue. If your concern has not been resolved by the CUSTOMER RELATIONS, SALES, SERVICE, or PARTS MANAGER, then please contact the GENERAL MANAGER of the dealership or the OWNER.

▼STEP 2

If, after following STEP 1, you feel the need for further assistance, please contact your area's Mazda representative (Indicated on the next page).

Please help us by providing the following information:

1. Your name, address, and telephone number
2. Year and model of vehicle
3. Vehicle Identification Number (17 digits, noted on your registration or title or located on the upper driver's side corner of the dash)
4. Purchase date and current mileage
5. Your dealer's name and location
6. Your question(s)

Customer Assistance (Mexico)

Your complete and permanent satisfaction is our business. We are here to serve you. All Authorized Mazda Dealers have the knowledge and the tools to keep your Mazda vehicle in top condition.
If you have any questions or recommendations for improvement regarding the service of your Mazda vehicle or servicing by Mazda Dealer personnel, we recommend that you take the following steps:

▼STEP 1: Contact Your Mazda Dealer

Discuss the matter with an Authorized Mazda Dealer. This is the quickest and best way to address the issue.

- If your concern has not been resolved by the CUSTOMER RELATIONS, SALES, SERVICE, or PARTS MANAGER, then please contact the GENERAL MANAGER of the dealership or the OWNER.
- If it becomes necessary to have the components or wiring system for the supplementary restraint system modified to accommodate a person with certain medical conditions in accordance with a certified physician, go to STEP2.

▼STEP 2: Contact Mazda Motor de Mexico

If for any reason you feel the need for further assistance after contacting your dealership management and it becomes necessary to have the components or wiring system for the supplementary restraint system modified to accommodate a person with certain medical conditions in accordance with a certified physician, you can reach Mazda Motor de Mexico by one of the following ways.

Log on: at www.MazdaMexico.com.mx

Answers to many questions, including how to locate or contact a local Mazda dealership in Mexico, can be found here.

E-mail: click on “Contactanos” at the top of the page at www.MazdaMexico.com.mx

By phone at: 1 (866) 315 0220

By letter at:
Attn: Customer Assistance
Mazda North American Operations
7755 Irvine Center Drive
Irvine, CA 92618-2922
P.O. Box 19734
Irvine, CA 92623-9734

Customer Assistance

In order to serve you efficiently and effectively, please help us by providing the following information:

1. Your name, address, and telephone number
2. Year and model of vehicle
3. Vehicle Identification Number (17 digits, noted on your registration or title or located on the upper driver's side corner of the dash)
4. Purchase date and current mileage
5. Your dealer's name and location
6. Your question(s)

Mazda Importer/Distributors

Importer/Distributor

▼U.S.A.

Mazda North American Operations
7755 Irvine Center Drive
Irvine, CA 92618-2922 U.S.A.
P.O. Box 19734
Irvine, CA 92623-9734 U.S.A.
TEL: 1 (800) 222-5500 (in U.S.A.)
(949) 727-1990 (outside U.S.A.)

Distributor in Each Area

▼CANADA

Mazda Canada Inc.
55 Vogell Road, Richmond Hill,
Ontario, L4B 3K5 Canada
TEL: 1 (800) 263-4680 (in Canada)
(905) 787-7000 (outside Canada)

▼PUERTO RICO/U.S. Virgin Island

Plaza Motors Corp. (Mazda de Puerto Rico)
P.O. Box 362722, San Juan, Puerto Rico
00936-2722
TEL: (787) 641-9300

▼MEXICO

Mazda Motor de Mexico
Circuito Guillermo Gonzalez Camarena N
1500 Col. Centro de Ciudad Santa Fe.
01210, Mexico, D.F.
TEL: Center of Attention to Clients:
01 (800) 016 2932. in Mexico

▼GUAM

Triple J Motors
157 South Marine Drive, Tamuning,
GUAM 96911 USA
P.O. Box 6066 Tamuning, Guam 96931
TEL: (671) 649-6555

▼SAIPAN

Pacific International Marianas, Inc.
(d.b.a. Midway Motors)
P.O. Box 887 Saipan, MP 96950
TEL: (670) 234-7524

Triple J Saipan, Inc.
(d.b.a. Triple J Motors)
P.O. Box 500487 Saipan, MP 96950-0487
TEL: (670) 234-7133/3051

Warranties for Your Mazda

- New Vehicle Limited Warranty
- Distributor Major Component Limited Warranty (Canada only)
- Safety Restraint System Limited Warranty
- Anti-perforation Limited Warranty
- Federal Emission Control Warranty (U.S.A. only)
  - Emission Defect Warranty
  - Emission Performance Warranty
- California Emission Control Warranty (U.S.A. only)
- Emission Control Warranty (Canada only)
- Replacement Parts and Accessories Limited Warranty
- Tire Warranty

NOTE
Detailed warranty information is provided with your Mazda.

Outside the United States and Canada

Government regulations in the United States and Canada require that automobiles meet specific emission regulations and safety standards. Therefore, vehicles built for use in the United States, its territories, and Canada may differ from those sold in other countries.

The differences may make it difficult or even impossible for your vehicle to receive satisfactory servicing in other countries. We strongly recommend that you NOT take your Mazda outside these areas.
You may have these problems if you do:

- Recommended fuel may be unavailable. Any kind of leaded fuel or low-octane fuel will affect vehicle performance and damage the emission controls and engine.
- Proper repair facilities, tools, testing equipment, and replacement parts may not be available.

The Mazda warranty applies only to Mazda vehicles registered and normally operated in the United States, its territories, and Canada.

Outside the United States

Government regulations in the United States require that automobiles meet specific emission regulations and safety standards. Therefore, vehicles built for use in the United States may differ from those sold in other countries.

The differences may make it difficult or even impossible for your vehicle to receive satisfactory servicing in other countries. We strongly recommend that you NOT take your Mazda outside the United States. However, in the event that you are moving to Canada permanently, Mazda vehicles built for use in the United States could be eligible for exportation to Canada with specific vehicle modifications to comply with the Canadian Motor Vehicle Safety requirements (CMVSS).

NOTE
The above is applicable for a permanent import/export situation and not related to travelers on vacation.

You may have the following problems if you do take your vehicle outside of the United States:
- Recommended fuel may be unavailable. Any kind of leaded fuel or low-octane fuel will affect vehicle performance and damage the emission controls and engine.
- Proper repair facilities, tools, testing equipment, and replacement parts may not be available.

Please refer to your Manufacturer's Warranty Booklet for more information.

Outside Canada

Government regulations in Canada require that automobiles meet specific emission regulations and safety regulations. Therefore, vehicles built for use in Canada may differ from those sold in other countries.

The differences may make it difficult or even impossible for your vehicle to receive satisfactory servicing in other countries. We strongly recommend that you NOT take your Mazda outside Canada. However, in the event that you are moving to the United States permanently, Mazda vehicles built for use in Canada could be eligible for exportation to the United States with specific vehicle modifications to comply with the United States Federal Motor Vehicle Safety Standards (FMVSS).

NOTE
The above is applicable for a permanent import/export situation and not related to travelers on vacation.

You may have the following problems if you do take your vehicle outside of Canada:
- Recommended fuel may be unavailable. Any kind of leaded fuel or low-octane fuel will affect vehicle performance and damage the emission controls and engine.
- Proper repair facilities, tools, testing equipment, and replacement parts may not be available.

Please refer to your Manufacturer's Warranty Booklet for more information.

Registering Your Vehicle in A Foreign Country (Except United States and Canada)

Government regulations in your country could require that automobiles meet specific emission and safety standards.
Vehicles built for your country may differ from those built for other countries. In addition to registration problems, satisfactory service may be difficult or even impossible in another country.

The fuel specified for your vehicle may be unavailable.

Parts, servicing techniques, and tools necessary to maintain and repair your vehicle may be unavailable.

There might not be an Authorized Mazda Dealer in the country you plan to take your vehicle.

The Mazda warranty is valid only in certain countries.

Add-On Non-Genuine Parts and Accessories

Non-genuine parts and accessories for Mazda vehicles can be found in stores.
These may fit your vehicle, but they are not approved by Mazda for use with Mazda vehicles. When you install non-genuine parts or accessories, they could affect your vehicle's performance or safety systems; the Mazda warranty doesn't cover this. Before you install any non-genuine parts or accessories, consult an Authorized Mazda Dealer.

⚠ WARNING

Always consult an Authorized Mazda Dealer before you install non-genuine parts or accessories:

Installation of non-genuine parts or accessories is dangerous. Improperly designed parts or accessories could seriously affect your vehicle's performance or safety systems. This could cause you to have an accident or increase your chances of injuries in an accident.

Be very careful in choosing and installing add-on electrical equipment, such as mobile telephones, two-way radios, stereo systems, and car alarm systems:

Incorrectly choosing or installing improper add-on equipment or choosing an improper installer is dangerous. Essential systems could be damaged, causing engine stalling, air-bag (SRS) activation, ABS inactivation, or a fire in the vehicle.

Mazda assumes no responsibility for death, injury, or expenses that may result from the installation of add-on non-genuine parts or accessories.

Cell Phones Warning

WARNING

Please comply with the legal regulations concerning the use of communication equipment in vehicles in your country:

Use of any electrical devices such as cell phones, computers, portable radios, vehicle navigation or other devices by the driver while the vehicle is moving is dangerous. Dialing a number on a cell phone while driving also ties-up the driver's hands. Use of these devices will cause the driver to be distracted and could lead to a serious accident. If a passenger is unable to use the device, pull off the right-of-way to a safe area before use. If use of a cell phone is necessary despite this warning, use a hands-free system to at least leave the hands free to drive the vehicle. Never use a cell phone or other electrical devices while the vehicle is moving and, instead, concentrate on the full-time job of driving.

Type Approval of Equipment (Mexico)

Immobilizer system

Este equipo opera a titulo secundario, consecuentemente, debe aceptar interferencias perjudiciales incluyendo equipos de la misma clase y puede no causar interferencias a sistemas operando a titulo primario

Sistema inmovilizador
Modelo : IMB111-02

Sistema inmovilizador con marcado de confirmación por radio

COFETEL RCPMAIM05-614

Sistema inmovilizador
Modelo : IMB111-03

Sistema inmovilizador con marcado de confirmación por radio

COFETEL RCPMAIM05-935

Type Approval of Equipment

Keyless entry system

Este equipo opera a titulo secundario, consecuentemente, debe aceptar interferencias perjudiciales incluyendo equipos de la misma clase y puede no causar interferencias a sistemas operando a titulo primario

Sistema de acceso normal sin llave
Modelo : SKE125-01

Sistema de acceso normal sin llave con marcado de confirmación por radio

COFETEL RCPMASK05-615

Sistema de arranque y de acceso avanzado sin llave
Modelo : SKE11A-01

Sistema de arranque y de acceso avanzado sin llave con marcado de confirmación por radio

COFETEL RCPMASK05-617

Uniform Tire Quality Grading System (UTQGS)

This information relates to the tire grading system developed by the U.S. National Highway Traffic Safety Administration for grading tires by tread wear, traction, and temperature performance.

▼Tread Wear

The tread wear grade is a comparative rating based on the wear rate of the tire when tested under controlled conditions on a specified government test course.
For example, a tire graded 150 would wear one-and-a-half times as well on the government course as a tire graded 100.

The relative performance of tires depends upon the actual conditions of their use, however, and may depart significantly from the norm because of variations in driving habits, service practices and differences in road characteristics and climate.

▼Traction-AA, A, B, C

The traction grades, from highest to lowest, are AA, A, B, and C. These grades represent the tire's ability to stop on wet pavement as measured under controlled conditions on specified government test surfaces of asphalt and concrete. A tire marked C may have poor traction performance.

⚠ WARNING

The traction grade assigned to this tire is based on braking (straight ahead) traction tests and does not include acceleration cornering (turning), hydroplaning, or peak traction characteristics.

▼Temperature-A, B, C

The temperature grades A (the highest), B, and C, represent the tire's resistance to the generation of heat and its ability to dissipate heat when tested under controlled conditions on a specified indoor laboratory test wheel.
Sustained high temperature can cause the material of the tire to degenerate and reduce tire life, and excessive temperatures can lead to sudden tire failure.

Grade C corresponds to a level of performance which all passenger vehicle tires must meet under the Federal Motor Vehicle Safety Standard No. 109. Grades B and A represent higher levels of performance on the laboratory test wheel than the minimum required by law.

Uniform Tire Quality Grading System (UTQGS)

⚠ WARNING

Keep your vehicle's tires properly inflated and not overloaded:

Driving with improperly inflated or overloaded tires is dangerous. Excessive speed, underinflation, or excessive loading, either separately or in combination, can cause heat buildup and possible tire failure. The temperature grade for this tire is established for a tire that is properly inflated and not overloaded.

These grades will be added to the sidewalls of passenger vehicle tires over the next several years according to a schedule established by the NHTSA and the tire manufacturers.

The grade of tires available as standard or optional equipment on Mazda vehicles may vary with respect to grade.

ALL PASSENGER VEHICLE TIRES MUST CONFORM TO THESE GRADES AND TO ALL OTHER FEDERAL TIRE-SAFETY REQUIREMENTS.

▼Uniform Tire Quality Grading

Quality grades can be found where applicable on the tire sidewall between tread shoulder and maximum section width.
For example:
Treadwear 200 Traction AA Temperature A

UTQGS MARK (example)

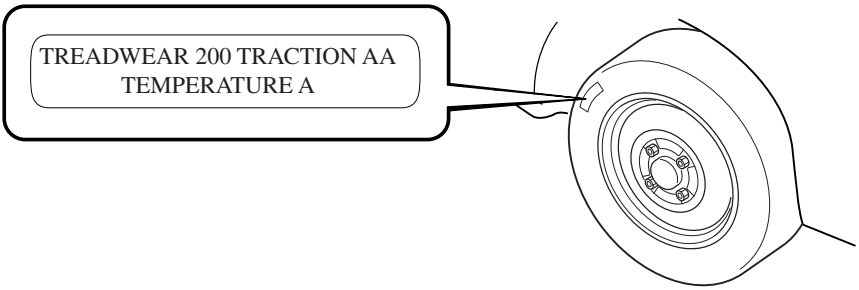

Tire Labeling

Federal law requires tire manufacturers to place standardized information on the sidewall of all tires. This information identifies and describes the fundamental characteristics of the tire and also provides a tire identification number for safety standard certification and in case of a recall.

▼Information on Passenger Vehicle Tires

Please refer to the diagram below.

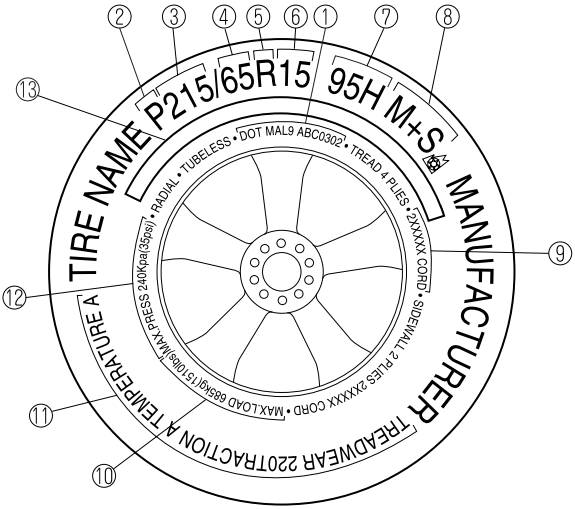

1. TIN: U.S. DOT tire identification number
2. Passenger car tire
3. Nominal width of tire in millimeters
4. Ratio of height to width (aspect ratio)
5. Radial
6. Rim diameter code
7. Load index & speed symbol
8. Severe snow conditions
9. Tire ply composition and materials used
10. Max. load rating

Tire Information (except Canada)

11. Tread wear, traction and temperature grades
12. Max. permissible inflation pressure
13. SAFETY WARNING

P215/65R15 95H is an example of a tire size and load index rating. Here is an explanation of the various components of that tire size and load index rating. Note that the tire size and load index rating may be different from the example.

P

Indicates a tire that may be installed on cars, SUVs, minivans and light trucks as designated by the Tire and Rim Association (T&RA).

NOTE

If your tire size does not begin with a letter this may mean it is designated by either ETRTO (European Tire and Rim Technical Organization) or JATMA (Japan Tire Manufacturing Association).

215

“215” is the nominal width of the tire in millimeters. This three-digit number gives the width in millimeters of the tire from sidewall edge to sidewall edge. In general, the larger the number, the wider the tire.

65

“65” is the aspect ratio. This two-digit number indicates the tire's ratio of height to width.

R

“R” is the tire construction symbol. R indicates “Radial ply construction”.

15

“15” is the wheel rim diameter in inches.

95

“95” is the Load Index. This two-or three-digit number indicates how much weight each tire can support.

H

"H" is the speed rating. The speed rating denotes the maximum speed for which the use of the tire is rated.

Letter Rating	Speed Rating
Q	99 mph
R	106 mph
S	112 mph
T	118 mph
U	124 mph
H	130 mph
V	149 mph
W	168* mph
Y	186* mph

* For tires with a maximum speed capability over 149 mph, tire manufacturers sometimes use the letters ZR. For tires with a maximum speed capability over 186 mph, tire manufacturers always use the letters ZR.

M+S or M/S: Mud and Snow

AT: All Terrain.
AS: All Season. The "M+S" or "M/S" indicates that the tire has some functional use in mud and snow.

U.S. DOT Tire Identification Number (TIN)

This begins with the letters "DOT" which indicates the tire meets all federal standards. The next two numbers or letters are the plant code where it was manufactured, and the last four numbers represent the week and year the tire was manufactured. For example, the numbers 457 means the 45st week of 1997. After 2000 the numbers go to four digits. For example, the number 2102 means the 21th week of 2002. The other numbers are marketing codes used at the manufacturer's discretion. This information is used to contact consumers if a tire defect requires a recall.

Tire Ply Composition and Materials Used

The number of plies indicates the number of layers of rubber-coated fabric in the tire. In general, the greater the number of plies, the more weight a tire can support. Tire manufacturers also must indicate the tire materials, which include steel, nylon, polyester, and other.

Maximum Load Rating

This number indicates the maximum load in kilograms and pounds that can be carried by the tire.

Maximum Permissible Inflation Pressure

This number is the greatest amount of air pressure that should ever be put in the tire under normal driving conditions.

Tire Information (except Canada)

Tread Wear, Traction and Temperature Grades

Tread wear: The tread wear grade is a comparative rating based on the wear rate of the tire when tested under controlled conditions on a specified government test course. For example, a tire graded 150 would wear one and one-half (1 1/2) times as well on the government course as a tire graded 100.
Traction: The traction grades, from highest to lowest are AA, A, B, and C. The grades represent the tire's ability to stop on wet pavement as measured under controlled conditions on specified government test surfaces of asphalt and concrete. A tire marked C may have poor traction performance.
Temperature: The temperature grades are A (the highest), B and C, representing the tire's resistance to the generation of heat and its ability to dissipate heat when tested under controlled conditions on a specified indoor laboratory test wheel.

Snow Tires

In some heavy snow areas, local governments may require true snow tires, those with very deeply cut tread. These tires should only be used in pairs or placed on all four wheels. Make sure you purchase snow tires that are the same size and construction type as the other tires on your vehicle.

SAFETY WARNING

The following safety warning appears on the tire's sidewall.
SERIOUS INJURY MAY RESULT FROM:

- EXPLOSION OF TIRE/RIM ASSEMBLY DUE TO IMPROPER MOUNTING-MATCH TIRE DIAMETER TO RIM DIAMETER; NEVER EXCEED 40 psi (275 kPa) TO SEAT BEADS-ONLY SPECIALLY TRAINED PERSONS SHOULD MOUNT TIRES.
- TIRE FAILURE DUE TO UNDER-INFLATION/OVERLOADING/DAMAGE-FOLLOW OWNER'S MANUAL AND PLACARD IN VEHICLE-FREQUENTLY CHECK INFLATION PRESSURE AND INSPECT FOR DAMAGE.

▼Information on Temporary Tires

Please refer to the diagram below.

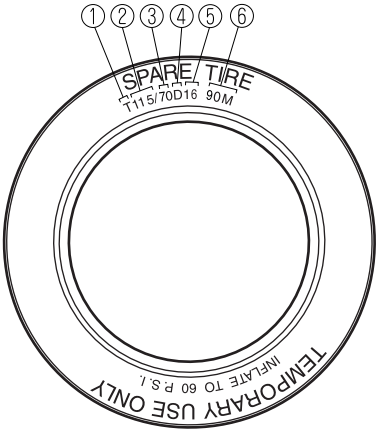

1. Temporary tires
2. Nominal width of tire in millimeters
3. Ratio of height to width (aspect ratio)
4. Diagonal
5. Rim diameter code
6. Load index&speed symbol

T115/70D 16 90M is an example of a tire size and load index rating. Here is an explanation of the various components of that tire size and load index rating. Note that the tire size and load index rating may be different from the example.

T

Indicates a tire that may be installed on cars, SUVs, minivans and light trucks as designated by the Tire and Rim Association (T&RA).

115

“115” is the nominal width of the tire in millimeters. This three-digit number gives the width in millimeters of the tire from sidewall edge to sidewall edge. In general, the larger the number, the wider the tire.

Tire Information (except Canada)

70

“70” is the aspect ratio. This two-digit number indicates the tire's ratio of height to width.

D

“D” is the tire construction symbol. D indicates “diagonal ply construction”.

16

“16” is the wheel rim diameter in inches.

90

“90” is the Load Index. This two-or three-digit number indicates how much weight each tire can support.

M

“M” is the speed rating. The speed rating denotes the maximum speed for which the use of the tire is rated.

Letter Rating	Speed Rating
M	81 mph

Location of the Tire Label (Placard)

You will find the tire label containing tire inflation pressure by tire size and other important information on the driver's side B-pillar or on the edge of the driver's door frame.

SAMPLE

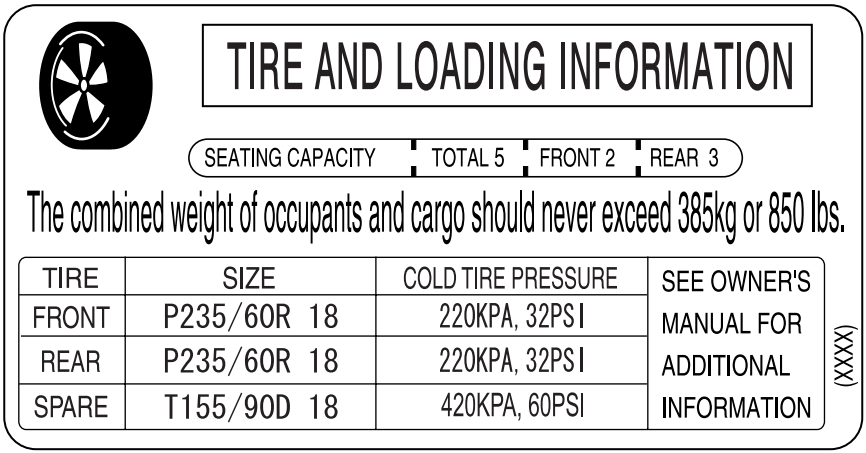

▼Recommended Tire Inflation Pressure

On the tire label you will find the recommended tire inflation pressure in both kPa and psi for the tires installed as original equipment on the vehicle. It is very important that the inflation pressure of the tires on your vehicle is maintained at the recommended pressure. You should check the tire pressure regularly to insure that the proper inflation pressure is maintained.
Refer to Tires on page 10-6.

NOTE
Tire pressures listed on the vehicle placard or tire information label indicate the recommended cold tire inflation pressure, measured when the tires are cold, after the vehicle has been parked for at least 3 hours. As you drive, the temperature in the tire warms up, increasing the tire pressure.

Tire Information (except Canada)

⚠ WARNING

Always check the tire inflation pressures on a regular basis according to the recommended tire inflation pressure on the tire label and in conjunction with the information in this owner's manual:

Driving your vehicle with under-inflated tires is dangerous.
Under-inflation is the most common cause of failures in any kind of tire and may result in severe cracking, tread separation or "blowout", with unexpected loss of vehicle control and increased risk of injury. Under-inflation increases sidewall flexing and rolling resistance, resulting in heat buildup and internal damage to the tire. It results in unnecessary tire stress, irregular wear, loss of control and accidents. A tire can lose up to half of its air pressure and not appear to be flat!
It is impossible to determine whether or not tires are properly inflated just by looking at them.

▼Checking Tire Pressure

1. When you check the air pressure, make sure the tires are cold —meaning they are not hot from driving even a mile.
2. Remove the cap from the valve on one tire.
3. Firmly press a tire gauge onto the valve.
4. Add air to achieve recommended air pressure.
5. If you overfill the tire, release air by pushing on the metal stem in the center of the valve. Then recheck the pressure with your tire gauge.
6. Replace the valve cap.
7. Repeat with each tire, including the spare.

NOTE
Some spare tires require higher inflation pressure.

8. Visually inspect the tires to make sure there are no nails or other objects embedded that could poke a hole in the tire and cause an air leak.
9. Check the sidewalls to make sure there are no gouges, cuts, bulges, cracks or other irregularities.

NOTE
Warm tires normally exceed recommended pressures. Don't release air from warm tires to adjust the pressure.
Under-inflation can cause serious failures and accidents.
Over-inflation can produce a harsh ride and the greater possibility of damage from road hazards.

▼Glossary of Terms

Tire Placard: A label indicating the OE tire sizes, recommended inflation pressure, and the maximum weight the vehicle can carry.
Tire Identification Number (TIN): A number on the sidewall of each tire providing information about the tire brand and manufacturing plant, tire size, and date of manufacture.
Inflation Pressure: A measure of the amount of air in a tire.
kPa: Kilopascal, the metric unit for air pressure.
psi: Pounds per square inch, the English unit for air pressure.
B-pillar: The structural member at the side of the vehicle behind the front door.
Original Equipment (OE): Describes components originally equipped on the vehicle.
Vehicle Load Limit: The maximum value of the combination weight of occupants and cargo.
Bead Area of the Tire: Area of the tire next to the rim.
Sidewall Area of the Tire: Area between the bead area and the tread.
Tread Area of the Tire: Area on the perimeter of the tire that contacts the road when it's mounted on the vehicle.

Seating capacity means the total allowable number of vehicle occupants. Seating capacity is described on the tire label.

Production options weight is the combination weight of installed regular production options weighing over 2.3 kilograms in excess of the standard items which they replace, and not previously considered in the curb weight or accessory weight, including heavy duty brakes, ride levelers, roof rack, heavy duty battery, and special trim.

Rim is the metal support (wheel) for a tire or a tire and tube assembly upon which the tire beads are seated.

Tire Maintenance

Improper or inadequate vehicle maintenance can cause tires to wear abnormally. Here are some important maintenance points:

▼Tire Inflation Pressure

Inspect all tire pressure monthly (including the spare) when the tires are cold. Maintain recommended pressures for the best ride, top handling, and minimum tire wear. Use the pressures specified on the vehicle tire information placard or tire label for optimum service.

▼Tire Rotation

To equalize tread wear, rotate the tires every 12,000 km (7,500 miles) or sooner if irregular wear develops. During rotation, inspect them for correct balance.

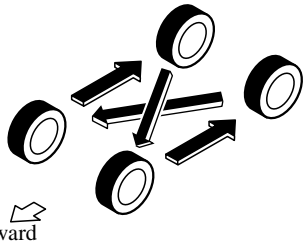

Do not include (TEMPORARY USE ONLY) spare tire in rotation.

Inspect the tires for uneven wear and damage. Abnormal wear is usually caused by one or a combination of the following:

- Incorrect tire pressure
- Improper wheel alignment
- Out-of-balance wheel
- Severe braking

After rotation, inflate all tire pressures to specification (page 10-6) and inspect the lug nuts for tightness.

⚠ CAUTION

Rotate unidirectional tires and radial tires that have an asymmetrical tread pattern or studs only from front to rear, not from side to side. Tire performance will be weakened if rotated from side to side.

▼Replacing a Tire

⚠ WARNING

Always use tires that are in good condition:

Driving with worn tires is dangerous. Reduced braking, steering, and traction could result in an accident.

If a tire wears evenly, a wear indicator will appear as a solid band across the tread. Replace the tire when this happens.

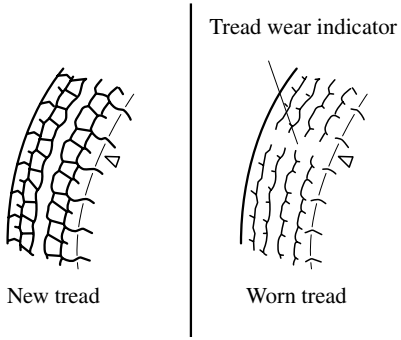

You should replace it before the band is across the entire tread.

NOTE

Tires degrade over time, even when they are not being used on the road. It is recommended that tires generally be replaced when they are 6 years or older. Heat caused by hot climates or frequent high loading conditions can accelerate the aging process. You should replace the spare tire when you replace the other road tires due to the aging of the spare tire. Regarding the manufacturing week and year is indicated with 4 digit. Refer to The tire labeling on page 9-23.

▼Safety Practices

The way you drive has a great deal to do with your tire mileage and safety. So cultivate good driving habits for your own benefit.

- Observe posted speed limits
- Avoid fast starts, stops and turns
- Avoid potholes and objects on the road
- Do no run over curbs or hit the tire against the curb when parking

Tire Information (except Canada)

⚠ CAUTION

If you feel a sudden vibration or ride disturbance while driving or you suspect your tire or vehicle has been damaged, immediately reduce your speed. Drive with caution until you can safely pull off the road. Stop and inspect the tire for damage. If the tire is under-inflated or damaged, deflate it, remove the tire and rim and replace it with your spare tire. If you cannot detect a cause, have the vehicle towed to the nearest vehicle or tire dealer to have the vehicle inspected.

Vehicle Loading

This section will guide you in the proper loading of your vehicle and/or trailer, to keep your loaded vehicle weight within its design rating capability, with or without a trailer. Properly loading your vehicle will provide maximum return of vehicle design performance. Before loading your vehicle, familiarize yourself with the following terms for determining your vehicle's weight ratings, with or without a trailer, from the vehicle's Safety Certification Label and Tire and Load Information Label:

WARNING

Overloaded Vehicle:

Overloading a vehicle is dangerous. The results of overloading can have serious consequences in terms of passenger safety. Too much weight on a vehicle's suspension system can cause spring or shock absorber failure, brake failure, handling or steering problems, irregular tire wear, tire failure or other damage. Overloading makes a vehicle harder to drive and control. It also increases the distance required for stopping. In cases of serious overloading, brakes can fail completely, particularly on steep grades. The load a tire will carry safely is a combination of the size of the tire, its load range, and corresponding inflation pressure.

Never overload the vehicle and always observe the vehicle's weight ratings from the vehicle's Safety Certification and Tire and Load Information labels.

Base Curb Weight is the weight of the vehicle including a full tank of fuel and all standard equipment. It does not include passengers, cargo, or optional equipment.

Vehicle Curb Weight is the weight of your new vehicle when you picked it up from your dealer plus any aftermarket equipment.

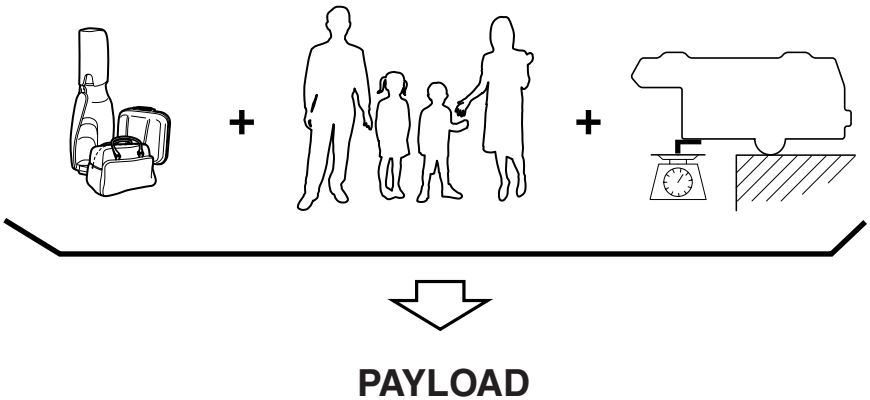

Tire Information (except Canada)

Payload is the combination weight of cargo and passengers that the vehicle is designed to carry. The maximum payload for your vehicle can be found on the Tire and Load Information label on the driver's door frame or door pillar. Look for “THE COMBINATION WEIGHT OF OCCUPANTS AND CARGO SHOULD NEVER EXCEED XXX kg or XXX lbs” for your maximum payload. The payload listed on the tire label is the maximum payload for the vehicle as built by the assembly plant. If any aftermarket or dealer installed equipment has been installed on the vehicle, the weight of the equipment must be subtracted from the payload listed on the tire label in order to be accurate.

SAMPLE

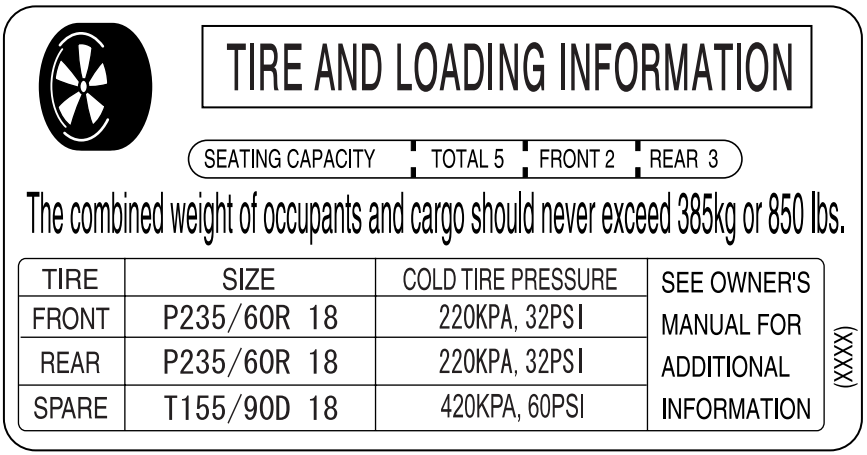

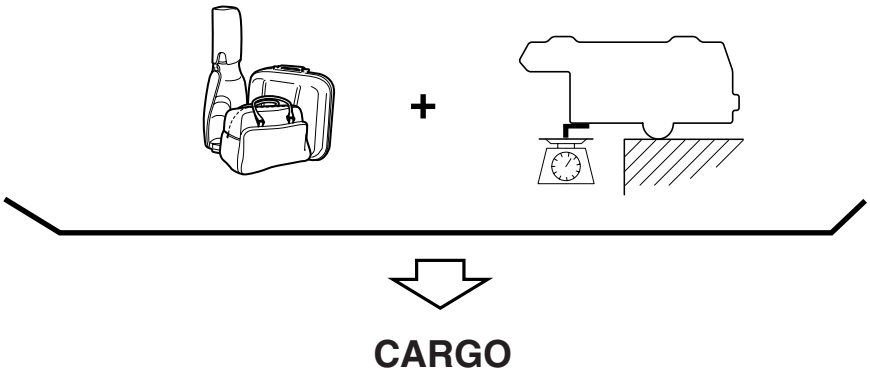

Cargo Weight includes all weight added to the Base Curb Weight, including cargo and optional equipment. When towing, trailer tongue load or king pin weight is also part of cargo weight.

The cargo weight limit decreases depending on the number of vehicle occupants. The cargo weight limit can be calculated by subtracting the total weight of the vehicle occupants from the “combination weight of occupants and cargo should never exceed” value on the tire label.

Examples: Based on a single occupant weight of 68 kg (150 lbs), and a value of 385 kg (849 lbs) for the “combination weight of occupants and cargo should never exceed”:
The cargo weight limit with one occupant is 385 kg (849 lbs) – 68 kg (150 lbs) = 317 kg (699 lbs)
The cargo weight limit with two occupants is 385 kg (849 lbs) – (68 × 2) kg ((150 × 2) lbs) = 249 kg (549 lbs)
If the weight of the occupant increases, the cargo weight limit decreases by that much.

GAW (Gross Axle Weight) is the total weight placed on each axle (front and rear) - including vehicle curb weight and all payload.

Tire Information (except Canada)

GAWR (Gross Axle Weight Rating) is the maximum allowable weight that can be carried by a single axle (front or rear). **These numbers are shown on the Safety Compliance Certification Label located on the driver's door frame or door pillar. The total load on each axle must never exceed its GAWR.**

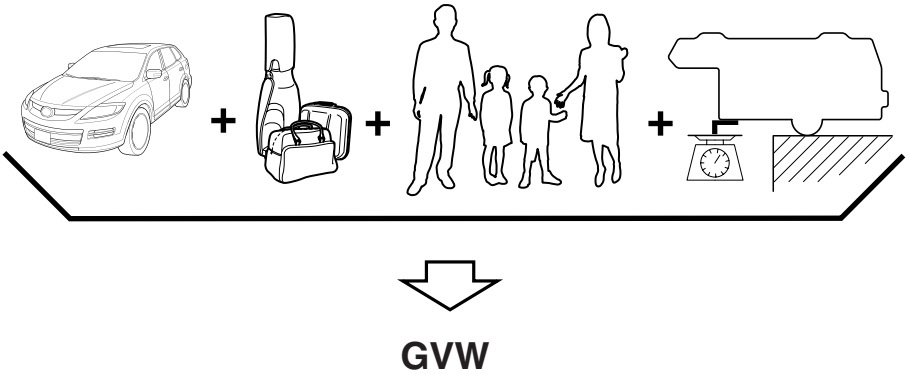

GVW (Gross Vehicle Weight) is the Vehicle Curb Weight + cargo + passengers.

GVWR (Gross Vehicle Weight Rating) is the maximum allowable weight of the fully loaded vehicle (including all options, equipment, passengers and cargo). **The GVWR is shown on the Safety Compliance Certification Label located on the driver's door frame or door pillar. The GVW must never exceed the GVWR.**

SAMPLE

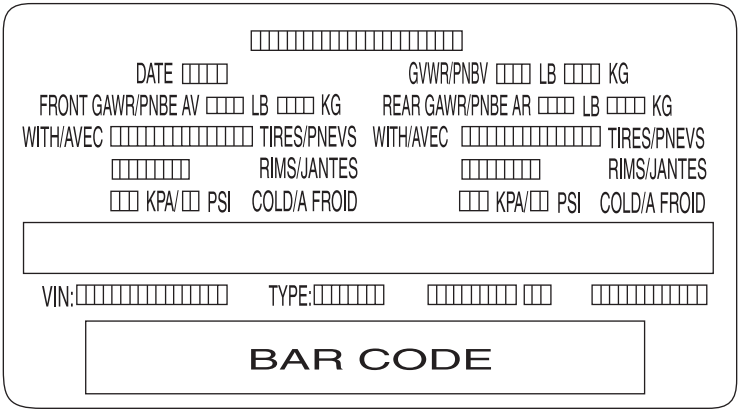

⚠ WARNING

Exceeding Axle Weight Rating Limits:

Exceeding the Safety Certification Label axle weight rating limits is dangerous and could result in death or serious injury as a result of substandard vehicle handling, performance, engine, transmission and/or structural damage, serious damage to the vehicle, or loss of control.

Always keep the vehicle within the axle weight rating limits.

Do not taw a trailer with this vehicle:

Towing a trailer with this vehicle is dangerous because it has not been designed to tow a trailer and doing so will affect the drive system which could result in vehicle damage.

Tire Information (except Canada)

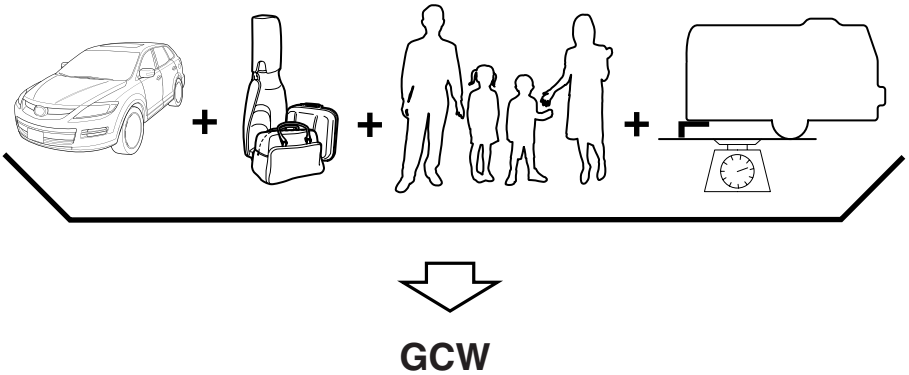

GCW (Gross Combination Weight) is the weight of the loaded vehicle (GVW) plus the weight of the fully loaded trailer.

GCWR (Gross Combination Weight Rating) is the maximum allowable weight of the vehicle and the loaded trailer - including all cargo and passengers - that the vehicle can handle without risking damage. (Important: The towing vehicle's braking system is rated for operation at GVWR, not at GCWR. Separate functional brakes should be used for safe control of towed vehicles and for trailers weighing more than 1,500 lbs). **The GCW must never exceed the GCWR.**

Maximum Loaded Trailer Weight is the highest possible weight of a fully loaded trailer the vehicle can tow. It assumes a vehicle with only mandatory options, no cargo (internal or external), a tongue load of 10–15% (conventional trailer) or king pin weight of 15–25% (fifth-wheel trailer), and driver only (150 lbs). **Consult your dealership (or the RV and Trailer Towing Guide provided by your dealership) for more detailed information. Tongue Load or Fifth-Wheel King Pin Weight** refers to the amount of the weight that a trailer pushes down on a trailer hitch.

Examples: For a 5000 lb conventional trailer, multiply 5000 by 0.10 and 0.15 to obtain a proper tongue load range of 500 to 750 lbs. For an 11,500 lb fifth-wheel trailer, multiply by 0.15 and 0.25 to obtain a proper king pin load range of 1,725 to 2,875 lbs.

WARNING

Exceeding GVWR or GAWR Specifications:

Exceeding the GVWR or the GAWR specified on the certification label is dangerous. Exceeding any vehicle rating limitation could result in a serious accident, injury, or damage to the vehicle.

Do not use replacement tires with lower load carrying capacities than the originals because they may lower the vehicle's GVWR and GAWR limitations. Replacement tires with a higher limit than the originals do not increase the GVWR and GAWR limitations.

Never exceed the GVWR or the GAWR specified on the certification label.

Steps for Determining the Correct Load Limit:

Steps for Determining Correct Load Limit:

(1) Locate the statement “The combined weight of occupants and cargo should never exceed XXX kg or XXX lbs” on your vehicle's placard.
(2) Determine the combined weight of the driver and passengers that will be riding in your vehicle.
(3) Subtract the combined weight of the driver and passengers from XXX kg or XXX lbs.
(4) The resulting figure equals the available amount of cargo and luggage load capacity. For example, if the “XXX” amount equals 1400 lbs. and there will be five 150 lb passengers in your vehicle, the amount of available cargo and luggage load capacity is 650 lbs. (1400– 750 (5 × 150) = 650 lbs.)
(5) Determine the combined weight of luggage and cargo being loaded on the vehicle. That weight may not safely exceed the available cargo and luggage load capacity calculated in Step 4.
(6) If your vehicle will be towing a trailer, the load from your trailer will be transferred to your vehicle. Consult this manual to determine how this reduces the available cargo and luggage load capacity of your vehicle.

Reporting Safety Defects (U.S.A.)

If you believe that your vehicle has a defect which could cause a crash or could cause injury or death, you should immediately inform the National Highway Traffic Safety Administration (NHTSA) in addition to notifying Mazda Motor Corporation (Your Mazda Importer/Distributor).

If NHTSA receives similar complaints, it may open an investigation, and if it finds that a safety defect exists in a group of vehicles, it may order a recall and remedy campaign. However, NHTSA cannot become involved in individual problems between you, your dealer, or Mazda Motor Corporation (Your Mazda Importer/Distributor).

To contact NHTSA, you may call the Vehicle Safety Hotline toll-free at 1-888-327-4236 (TTY: 1-800-424-9153) ; go to http://www.safercar.gov; or write to: Administrator, NHTSA, 400 Seventh Street, SW., Washington, DC 20590. You can also obtain other information about motor vehicle safety from http://www.safercar.gov.

NOTE
If you live in the U.S.A., all correspondence to Mazda Motor Corporation should be forwarded to:

Mazda North American Operations
7755 Irvine Center Drive
Irvine, California 92618-2922
P.O. Box 19734
Irvine, CA 92623-9734
Customer Assistance Center or toll free at 1 (800) 222-5500

If you live outside of the U.S.A., please contact the nearest Mazda Distributor shown (page 9-10) in this booklet.

Reporting Safety Defects (Canada)

Canadian customers who wish to report a safety-related defect to Transport Canada, Defect Investigations and Recalls, may telephone the toll free hotline 1-800-333-0510, or contact Transport Canada by mail at: Transport Canada, ASFAD, Place de Ville Tower C, 330 Sparks Street, Ottawa ON K1A 0N5.

For additional road safety information, please visit the Road Safety website at: http://www.tc.gc.ca/roadsafety/menu.htm

Service Publications

Factory-authorized Mazda service publications are available for owners who wish to do some of their own maintenance and repair.

When requesting any of our publications through an Authorized Mazda Dealer, refer to the chart below.

If they don't have what you need in stock, they can order it for you.

PUBLICATION ORDER NUMBER	PUBLICATION DESCRIPTION
9999-95-003B-08	2008 WORKSHOP MANUAL (English)
9999-MX-003B-08	2008 WORKSHOP MANUAL (Spanish)
9999-95-009G-08	2008 WIRING DIAGRAM (English)
9999-MX-009G-08	2008 WIRING DIAGRAM (Spanish)
9999-95-011C-08 (U.S.A. only)	2008 OWNER'S MANUAL
9999-EC-011C-08 (Canada only)	2008 OWNER'S MANUAL
9999-PR-011C-08 (Puerto Rico, Mexico only)	2008 OWNER'S MANUAL
9999-95-011C-08	2008 QUICK TIPS
9999-95-001F-07	2008 SERVICE HIGHLIGHTS
9999-95-011C-07NAV (U.S.A. only)	2008 NAVIGATION SYSTEM OWNER'S MANUAL
9999-EC-011C-07NAV (Canada only)	2008 NAVIGATION SYSTEM OWNER'S MANUAL

▼WORKSHOP MANUAL:

Covers recommended maintenance and repair procedures of the drive train, body and chassis.

▼WIRING DIAGRAM:

Provides electrical schematics as well as component location for the entire electrical system.

▼OWNER'S MANUAL:

This booklet contains information regarding the proper care and operation of your vehicle. This is not a technician's manual.

▼QUICK TIPS:

This guide contains quick and concise information regarding proper operation of your vehicle and it's many features. This is not a technician's manual.

Service Publications

▼SERVICE HIGHLIGHTS:

Provides description and operation of the many systems of your Mazda.

▼NAVIGATION SYSTEM OWNER'S MANUAL:

This booklet contains information regarding the proper operation and use of the navigation system. This is not a technician's manual.

10 Specifications

Technical information about your Mazda.

Identification Numbers 10-2
Vehicle Information Labels 10-2

Specifications 10-4
Specifications 10-4

Vehicle Information Labels

▼Vehicle Identification Number

The vehicle identification number legally identifies your vehicle. The number is on a plate attached to the cowl panel located on the left corner of the dashboard. This plate can easily be seen through the windshield.

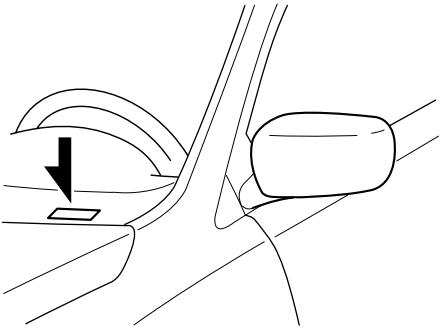

▼Motor Vehicle Safety Standard Label

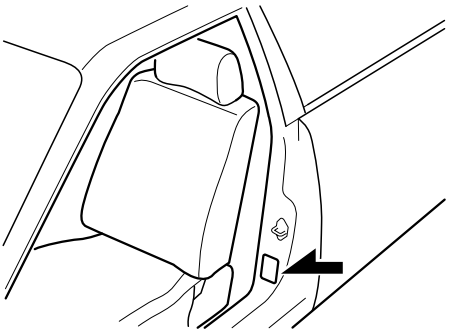

▼Chassis Number

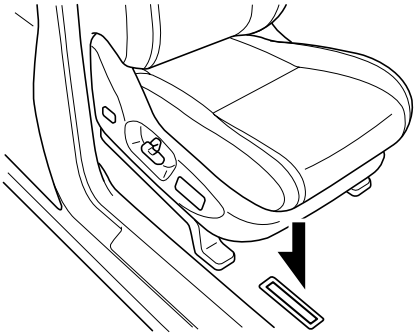

▼Vehicle Emission Control Information Label

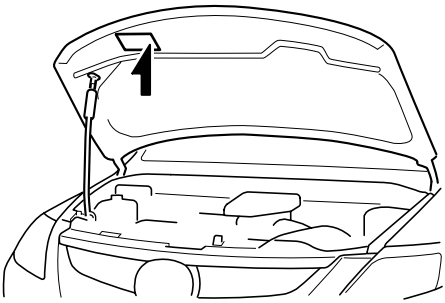

▼Tire Pressure Label (Except Canada)

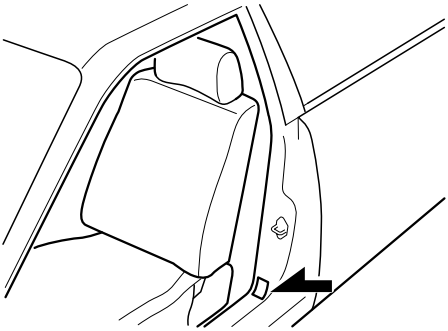

▼Engine Number

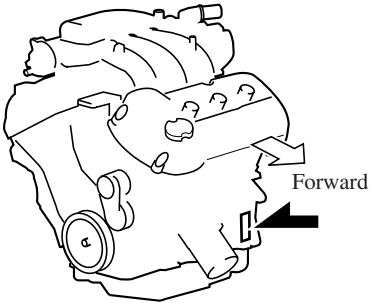

Specifications

▼Engine

Item	Specification
Type	DOHC-24V 60°V, 6-cylinder
Bore×Stroke	95.5 × 86.7 mm (3.75 × 3.41 in)
Displacement	3,726 ml (3,726 cc, 227.4 cu in)
Compression ratio	10.3

▼Electrical System

Item	Classification
Battery	12V-55AH/5HR MF
Spark-plug number	CY01-18110*1
Spark-plug gap	1.29—1.45 mm (0.051—0.057 in)

*1 ex factory

⚠ CAUTION

When cleaning the platinum plugs, do not use a wire brush. The fine particulate coating on the iridium alloy and platinum tips could be damaged.

▼Lubricant Quality

Lubricant	Classification
Engine oil	Refer to the recommended SAE viscosity numbers on page 8-19.
Automatic transaxle fluid	JWS3309
Transfer case oil	API Service GL-5 (SAE 75W-140)
Rear differential oil	API Service GL-5 (SAE 80W-90)
Power steering fluid	ATF M-III, M-V, or equivalent (e.g. Dexron® II)
Brake fluid	SAE J1703, or FMVSS116 DOT-3

▼Capacities

(Approximate Quantities)

Item		Capacity
Engine oil	With oil filter replacement	5.2 L (5.5 US qt, 4.6 Imp qt)
	Without oil filter replacement	4.7 L (5.0 US qt, 4.2 Imp qt)
Coolant	With Towing Package	12.2 L (12.9 US qt, 10.7 Imp qt)
	Without Towing Package	11.6 L (12.3 US qt, 10.2 Imp qt)
Automatic transaxle fluid		7.0 L (7.4 US qt, 6.2 Imp qt)
Transfer case oil		0.532 L (0.562 US qt, 0.468 Imp qt)
Rear differential oil		1.0 L (1.1 US qt, 0.9 Imp qt)
Washer fluid		4.5 L (4.8 US qt, 4.0 Imp qt)
Fuel tank		76.0 L (20.1 US gal, 16.7 Imp gal)

Check oil and fluid levels with dipsticks or reservoir gauges.

▼Dimensions

Item	Vehicle specification
Overall length	5,074 mm (199.8 in)
Overall width	1,936 mm (76.2 in)
Overall height	1,728 mm (68.0 in)
Front tread	1,654 mm (65.1 in)
Rear tread	1,644 mm (64.7 in)
Wheelbase	2,875 mm (113.2 in)

▼Weights

Item		Weight	
		2WD	AWD
GVWR (Gross Vehicle Weight Rating)		2,645 kg (5,831 lbs)	2,744 kg (6,049 lbs)
GAWR (Gross Axle Weight Rating)	Front	1,276 kg (2,813 lbs)	1,307 kg (2,881 lbs)
	Rear	1,400 kg (3,086 lbs)	1,458 kg (3,214 lbs)

▼Air Conditioner

Item	Classification
Refrigerant Type	HFC134a (R-134a)

▼Light Bulbs

Exterior light

Light bulb			Category	
			Wattage	ECE R (SAE)
Headlights	High beam		60	HB3 (HB3)
	Low beam	Halogen	55	H11 (—)
		Xenon fusion	35	D2S (D2S)
Front turn signal lights			27	— (#1156NA)
Front side-marker lights			5	WY5W (—)
Fog lights*			51	HB4 (#9006)
Side turn signal lights*		LED bulb*1	2.26	— (—)
High-mount brake light*1			2.4	— (—)
Rear turn signal lights			21	WY21W (32CP)
Brake lights*2			5.4	— (—)
Taillights		Rear combination light side*2	0.7	— (—)
		Liftgate side	3.8	— (#194)
Reverse lights			21	W21W (#7440)
License plate lights			5	T10 (—)
Rear side-marker lights			5	W5W (4CP)

*1 Bulb replacement is not possible because it is built into the unit. Replace the unit.
*2 Bulb replacement is not possible. The rear combination component must be replaced.

Interior light

Light bulb	Category	
	Wattage	ECE R
Overhead lights/Map lights (Front)	8	—
Overhead light (Center)	10	—
Overhead light (Rear)	10	—
Courtesy lights	5	T10
Vanity mirror lights*	2	—
Luggage compartment light	10	—

▼Tires

NOTE

The tires have been optimally matched with the chassis of your vehicle.
When replacing tires, Mazda recommends that you replace tires of the same type originally fitted to your vehicle. For details, contact an Authorized Mazda Dealer.

 *Some models.

Check the tire pressure label for tire size and inflation pressure.
Refer to Tire Inflation Pressure on page 8-33.

Standard tire

Tire size	Inflation pressure	
	Front	Rear
P245/60R18 104H	250 kPa (36 psi)	250 kPa (36 psi)
P245/50R20 102V	230 kPa (34 psi)	230 kPa (34 psi)

Temporary spare tire

(Except Mexico)

Tire size	Inflation pressure
T155/90D18 103M	420 kPa (60 psi)

(Mexico)

Tire size	Inflation pressure
195/80R17 99M	250 kPa (36 psi)

▼Fuses

Refer to the fuse rating on page 8-44.

11 Index

A

Accessory Socket 6-131
Add-On Non-Genuine Parts and Accessories 9-17
Advanced Key 3-2
Advanced key maintenance 3-5
Advanced key suspend function 3-16
Auxiliary key 3-15
Locking, unlocking with request switch 3-8
Operational range 3-7
Remote control function 3-13
Service 3-6
Setting change 3-19
Warning and beep sounds 3-16
When warning indicator/beep is activated 3-20
Air Bag Systems 2-50
All-Wheel Drive (AWD) Operation 5-16
AWD Warning light 5-17
Ambient Temperature Display 6-124
Antenna 6-17
Anti-Lock Brake System (ABS) 5-7
Warning light 5-7
Appearance Care 8-52
Armrest Box 6-128
Audio
Audio control switch 6-46
Audio System 6-17
Audio set 6-27
Auxiliary input 6-48
Operating tips for audio system 6-17
Safety certification 6-50

A

Automatic Transaxle
Driving tips 5-15
Fluid 8-24
Manual shift mode 5-12
Shift-lock system 5-12
Transaxle ranges 5-11

B

Battery
Emergency starting 7-16
Maintenance 8-31
Specifications 10-4
Beeps
Ignition key reminder 5-57
Lights-on reminder 5-57
Parking brake reminder 5-57
Seat belt warning beep Sounds ... 5-56
Tire inflation pressure warning beep 5-57
Before Starting the Engine 4-5
After getting in 4-5
Before getting in 4-5
Blind Spot Monitoring (BSM) System 5-33
BSM OFF Indicator Light 5-35
BSM OFF Switch 5-36
Care of Radar Sensors 5-36
Warning Light/Beep 5-35

B

Bluetooth Hands-Free 6-103
Basic Bluetooth Hands-Free Operation 6-106
Convenient Use of the Hands-Free System 6-109
Hands-Free Telephone Setting 6-113
Safety certification 6-119
When the Bluetooth Hands-Free cannot be used 6-118
Body Lubrication 8-27
Bottle Holder 6-127
Brake
Fluid 8-23
Brakes
Anti-lock brake system (ABS) 5-7
Brakes assist 5-8
Foot brake 5-5
Pad wear indicator 5-9
Parking brake 5-5
Warning light 5-6
Break-In Period 4-6
Bulb Replacement 8-37

C

Capacities 10-5
Carbon Monoxide 4-4
Cargo Securing Loops 6-128
Cargo Sub-Compartment 6-129
Catalytic Converter 4-3
Cell Phones 9-18
Center Console 6-128

C

Child Restraint
Child restraint precautions 2-34
Installing child-restraint systems 2-38
LATCH child-restraint systems 2-45
Child Safety Locks for Rear Doors ... 3-28
Climate Control System 6-2
Gas specifications 10-5
Clock 6-124
Coin Box 6-128
Courtesy Lights 6-122
Cruise Control 5-19
Cup Holder 6-125
Customer Assistance 9-2

D

Dashboard Illumination 5-40
Daytime Running Lights 5-61
Defroster
Rear window 5-66
Dimensions 10-5
Door Locks 3-25
Driving In Flooded Area 4-11
Driving Tips 4-6
Automatic transaxle 5-15
Break-in period 4-6
Driving in flooded area 4-11
Hazardous driving 4-7
Money-saving suggestions 4-6
Rocking the vehicle 4-9
Winter driving 4-9
Dynamic Stability Control (DSC)/Roll Stability Control (RSC) 5-25
TCS/DSC/RSC Indicator light.... 5-26

E

Emergency Starting 7-16
Flooded engine 7-16
Jump-starting 7-17
Push-starting 7-19
Emergency Towing 7-20
Emission Control System
(Gasoline Engine) 4-3
Engine
Coolant 8-21
Exhaust gas 4-4
Hood release 3-43
Oil 8-19
Overheating 7-14
Starting 5-4
Engine Compartment Overview 8-18
Engine Coolant
Overheating 7-14
Engine Coolant Temperature
Gauge 5-39
Exhaust Gas 4-4
Exterior Care 8-54

F

Flasher
Hazard warning 5-68
Headlights 5-58
Flat Tire 7-3
Changing 7-8
Spare tire and tool storage 7-3
Fluids
Classification 10-4
Owner maintenance 8-16
Fog Lights 5-62
Front 5-62
Foot Brake 5-5
Front Seats
(Electrically Operated Seats) 2-5

F

Front Seats
(Manually Operated Seats) 2-2
Fuel
Filler lid and cap 3-42
Gauge 5-40
Requirements (Gasoline engine)... 4-2
Tank capacity 10-5
Fuses 8-44
Panel description 8-47
Replacement 8-44

G

Glove Box 6-128

H

Hazard Warning Flasher 5-68
Hazardous Driving 4-7
Headlights
Control 5-58
Flashing 5-60
High-low beam 5-60
Leveling 5-60
On reminder 5-60
Hood Release 3-43
Horn 5-67

I

Ignition
Keys 3-21
Switch 5-2
Illuminated Entry System 6-121
Immobilizer System
(with Advanced Key) 3-50
Immobilizer System
(without Advanced Key) 3-52

I

Indicator Lights 5-41
BSM OFF 5-55
Cruise 5-55
Headlight high-beam 5-54
Security 5-53
Shift position 5-54
TCS OFF 5-55
TCS/DSC 5-54
Turn-signal/hazard warning 5-56
Information Display 6-123
Ambient temperature display.... 6-124
Audio display 6-125
Climate control display 6-125
Clock 6-124
Information display functions... 6-123
Instrument Cluster 5-37
Interior Care 8-57
Interior Lights 6-121

J

Jump-Starting 7-17

K

Keyless Entry System 3-22
Keys 3-21

L

Label Information 10-2
Lane-Change Signals 5-61
Liftgate 3-28
Light Bulbs
Replacement 8-37
Specifications 10-6
Lighting Control 5-58
Lubricant Quality 10-4

L

Luggage Compartment Light 6-122

M

Maintenance
Introduction 8-2
Owner maintenance
precautions 8-17
Owner maintenance schedule 8-16
Scheduled 8-3
Map Lights 6-122
Mirrors
Outside mirrors 3-57
Rearview mirror 3-58
Money-Saving Suggestions 4-6
Moonroof 3-44

O

Odometer and Trip Meter 5-38
Outside Mirrors 3-57
Overhead Console 6-127
Overhead Lights 6-121
Overheating 7-14
Overloading 4-11

P

Paint Damage 8-52
Parking Brake 5-5
Parking in an Emergency 7-2
Power Door Locks 3-27
Power Liftgate 3-30
Power Outlet 6-132
Power Steering 5-16
Fluid 8-24
Power Windows 3-35
Push-Starting 7-19

R

Rear Door Child Safety Locks 3-28
Rear Entertainment System 6-51
Before operation 6-63
Country code list 6-94
Language code list 6-92
Sound output 6-69
Rear Window Defroster 5-66
Rear Window Washer 5-66
Rear Window Wiper 5-66
Rearview Mirror 3-58
Recreational Towing 7-23
Registering Your Vehicle in A Foreign Country 9-16
Rocking the Vehicle 4-9
Roll-over 4-8

S

Safety Defects, Reporting 9-43
Seat Belt System
3-point type 2-22
Automatic locking 2-21
Belt minder 2-32
Center-rear lap/shoulder 2-27
Emergency locking 2-20
Extender 2-30
Pregnant women 2-20
Pretensioner and load limiting 2-24
Seat belt precautions 2-18
Warning light/beep 2-32
Seats
Front seat (Electrically operated seats) 2-5
Front seat (Manually operated seats) 2-2
Seat warmer 2-10
Second-row seats 2-11
Third-row seat 2-16

S

Second-Row Seats 2-11
Security System
Immobilizer system (without advanced key) 3-52
Immobilizer system (with advanced key) 3-50
Theft-deterrent system 3-55
Service Publications 9-45
Shopping Bag Hook 6-129
Side Extention Sunvisors 6-120
Spare Tire and Tool Storage 7-3
Specifications 10-4
Speedometer 5-38
Starting the Engine 5-4
Steering Wheel 3-57
Horn 5-67
Storage Compartments 6-127
Armrest box 6-128
Cargo securing loops 6-128
Cargo sub-compartment 6-129
Center console 6-128
Coin box 6-128
Glove box 6-128
Overhead console 6-127
Shopping bag hook 6-129
Sunshade 3-49
Sunvisors 6-120

T

Tachometer 5-39
Temporary Spare Tire 8-35
Theft-Deterrent System 3-55
Third-Row Seat 2-16
Tiedown
Hook 7-21
Tire Information 9-23

T

Tire Pressure Monitoring System 5-27
System error activation 5-31
Tire pressure monitoring system warning light 5-29
Tires and wheels 5-31
Tires
Flat Tire 7-3
Inflation pressure 8-33
Replacement 8-34
Rotation 8-34
Snow tires 4-9
Spare tire and tool storage 7-3
Specifications 10-6
Tire chains 4-10
Uniform tire quality grading system (UTQGS) 9-21
Tool 7-3
Towing
Description 7-20
Emergency towing 7-20
Recreational towing 7-23
Trailer towing (Except Mexico) 4-12
Traction Control System (TCS) 5-22
TCS OFF indicator light 5-23
TCS OFF switch 5-24
TCS/DSC indicator light 5-23
Trailer Towing 4-12
Trip Meter 5-38
Turn and Lane-Change Signals 5-61

V

Vanity Mirrors 6-120
Vehicle Information Labels 10-2

W

Warning Lights 5-41
ABS 5-44
Air bag system 5-46
Automatic transaxle 5-49
AWD 5-49
Brake system 5-43
Charging system 5-45
Check engine 5-45
Check fuel cap 5-47
Door-ajar 5-49
Engine oil pressure 5-45
Front seat belt pretensioner system 5-46
KEY Warning Light (Red)/KEY Indicator Light (Green) 5-52
Low fuel 5-47
Low washer fluid level 5-49
Powertrain malfunction/reduced power 5-46
Seat belt 5-47
Tire pressure monitoring system 5-50
Warranty 9-12
Washer Fluid 8-26
Weights 10-5
Wheel Replacement 8-36
Windows
Power windows 3-35
Windshield Washer 5-65
Windshield Wipers 5-63
Blades replacement 8-27
Winter Driving 4-9