FOREWORD

Dear Customer,

Thank you for selecting your new Kia vehicle.

As a global car manufacturer focused on building high-quality vehicles with exceptional value, Kia Motors is dedicated to providing you with a customer service experience that exceeds your expectations.

If technical assistance is needed on your vehicle, authorized Kia dealerships are available at your service, with their Kia trained technicians, recommended special tools and Kia genuine parts.

This Owner's Manual will acquaint you with the operation of features and equipment that are either standard or optional on this vehicle, along with the maintenance needs of this vehicle. Therefore, you may find some descriptions and illustrations not applicable to your vehicle. You are advised to read this publication carefully and follow the instructions and recommendations. Please always keep this manual in the vehicle for your, and any subsequent owner's, reference.

All information contained in this Owner's Manual was accurate at the time of publication. However, as Kia continues to make improvements to its products, the company reserves the right to make changes to this manual or any of its vehicles at any time without notice and without incurring any obligations.

Please drive safely, and enjoy your Kia vehicle!

© 2021 KIA MOTORS India, Inc.

All rights reserved. May not be reproduced or translated in whole or in part without the written consent of Kia Motors India, Inc.

Printed in India

How to use this manual

We want to help you get the greatest possible driving pleasure from your vehicle. Your Owner's Manual can assist you in many ways.

We strongly recommend that you read the entire manual. In order to minimize the chance of death or injury, you must read the WARNING and CAUTION sections in the manual.

Illustrations complement the words in this manual to best explain how to enjoy your vehicle. By reading your manual, you learn about features, important safety information, and driving tips under various road conditions.

The general layout of the manual is provided in the Table of Contents. Use the index when looking for a specific area or subject, it has an alphabetical listing of all information in your manual.

Chapters: This manual has nine chapter plus an abbreviation, index and Kia warranty policy sections. Each chapter begins with a brief list of contents so you can tell at a glance if that chapter has the information you want.

You will find various WARNINGs, CAUTIONs, and NOTICEs in this manual. These WARNINGs were prepared to enhance your personal safety. You should carefully read and follow ALL procedures and recommendations provided in these WARNINGs, CAUTIONs and NOTICEs.

⚠ WARNING

A WARNING indicates a situation in which harm, serious bodily injury or death could result if the warning is ignored.

⚠ CAUTION

A CAUTION indicates a situation in which damage to your vehicle could result if the caution is ignored.

✻ NOTICE

A NOTICE indicates interesting or helpful information is being provided.

Table of Contents

Introduction 1

Your vehicle at a glance 2

Safety features of your vehicle 3

Features of your vehicle 4

Infotainment system 5

Driving your vehicle 6

What to do in an emergency 7

Maintenance 8

Specifications & Consumer information 9

Abbreviation A

Index I

Kia Warranty Policy W

Introduction 1

Fuel requirements 1-2
• Gasoline (Petrol) engine 1-2
• Diesel engine 1-4
Vehicle modifications 1-5
Vehicle break-in process 1-5
Risk of burns when parking or stopping vehicle..... 1-6

INTRODUCTION

Fuel requirements

Gasoline (Petrol) engine

Unleaded

Your new vehicle is designed to use only unleaded fuel having an Octane Rating of RON (Research Octane Number) 91 / AKI (Antiknock Index) 87 or higher. (Do not use methanol blended fuels)

Your new vehicle is designed to obtain maximum performance with UNLEADED FUEL, as well as minimize exhaust emissions and spark plug fouling.

⚠ CAUTION

NEVER USE LEADED FUEL. The use of leaded fuel is detrimental to the catalytic converter and will damage the engine control system's oxygen sensor and affect emission control.

Never add any fuel system cleaning agents to the fuel tank other than what has been specified. (Kia recommends to consult an authorized Kia dealer/service partner for details.)

⚠ WARNING

- Do not "top off" after the nozzle automatically shuts off when refueling.
- Always check that the fuel cap is installed securely to prevent fuel spillage in the event of an accident.

Gasoline (Petrol) containing alcohol and methanol

Gasohol, a mixture of gasoline (petrol) and ethanol (also known as grain alcohol), and gasoline (petrol) or gasohol containing methanol (also known as wood alcohol) are being marketed along with or instead of leaded or unleaded gasoline (petrol).

Do not use gasohol containing more than 10% ethanol, and do not use gasoline (petrol) or gasohol containing any methanol. Either of these fuels may cause drivability problems and damage to the fuel system, engine control system and emission control system.

Discontinue using gasohol of any kind if driveability problems occur.

Vehicle damage or driveability problems may not be covered by the manufacturer's warranty if they result from the use of:

1. Gasohol containing more than 10% ethanol.
2. Gasoline (Petrol) or gasohol containing methanol.
3. Leaded fuel or leaded gasohol.

⚠ CAUTION

Never use gasohol which contains methanol. Discontinue use of any gasohol product which impairs drivability.

Other fuels

Using fuels such as
- Silicone (Si) contained fuel,
- MMT (Manganese, Mn) contained fuel,
- Ferrocene (Fe) contained fuel, and
- Other metalic additives contained fuels,

may cause vehicle and engine damage or cause plugging, misfiring, poor acceleration, engine stalling, catalyst melting, abnormal corrosion, life cycle reduction, etc.

Also, the Malfunction Indicator Lamp (MIL) may illuminate.

✻ NOTICE

Damage to the fuel system or performance problem caused by the use of these fuels may not be covered by your New Vehicle Limited Warranty.

Use of MTBE

Kia recommends avoiding fuels containing MTBE (Methyl Tertiary Butyl Ether) over 15.0% vol. (Oxygen Content 2.7% weight) in your vehicle.

Fuel containing MTBE over 15.0% vol. (Oxygen Content 2.7% weight) may reduce vehicle performance and produce vapor lock or hard starting.

⚠ CAUTION

Your New Vehicle Limited Warranty may not cover damage to the fuel system and any performance problems that are caused by the use of fuels containing methanol or fuels containing MTBE (Methyl Tertiary Butyl Ether) over 15.0% vol. (Oxygen Content 2.7% weight.)

Do not use methanol

Fuels containing methanol (wood alcohol) should not be used in your vehicle. This type of fuel can reduce vehicle performance and damage components of the fuel system, engine control system and emission control system.

Fuel additives

Kia recommends that you use unleaded gasoline (petrol) which has an octane rating of RON (Research Octane Number) 91 / AKI (Antiknock Index) 87 or higher.

For customers who do not use good quality gasolines (petrols) including fuel additives regularly, and have problems starting or the engine does not run smoothly, one bottle of additives should be added to the fuel tank at every 10,000 km.

Additives are available from a professional workshop along with information on how to use them. Kia recommends to visit an authorized Kia dealer/service partner.

Operation in foreign countries

If you are going to drive your vehicle in another country, be sure to:

- Observe all regulations regarding registration and insurance.
- Determine that acceptable fuel is available.

Diesel engine

Diesel fuel

Diesel engines must be operated only on commercially available diesel fuel that complies with EN 590 or comparable standard. (EN stands for "European Norm"). Do not use marine diesel fuel, heating oils, or non-approved fuel additives, as this will increase wear and cause damage to the engine and fuel system. The use of non-approved fuels and / or fuel additives will result in a limitation of your warranty rights.

Diesel fuel of above cetane 51 is used in your vehicle. If two types of diesel fuels are available, use summer or winter fuel properly according to the following temperature conditions.

- Above -5 °C (23 °F) ... Summer type diesel fuel.
- Below -5 °C (23 °F) ... Winter type diesel fuel.

Watch the fuel level in the tank very carefully: If the engine stops through fuel failure, the circuits must be completely purged to restart.

Vehicle modifications

This vehicle should not be modified.

Modification of your vehicle could affect its performance, safety or durability and may even violate governmental safety and emissions regulations. In addition, damage or performance problems resulting from any modification may not be covered under warranty.

- If you use unauthorized electronic devices, it may cause the vehicle to operate abnormally, wire damage, battery discharge and fire.

For your safety, do not use unauthorized electronic devices.

Vehicle break-in process

No special break-in period is needed.

By following a few simple precautions for the first 1,000 km (600 miles) you may add to the performance, economy and life of your vehicle.

- Do not race the engine.
- While driving, keep your engine speed (rpm, or revolutions per minute) between 2,000 rpm and 4,000 rpm.
- Do not maintain a single speed for long periods of time, either fast or slow. Varying engine speed is needed to properly break-in the engine.
- Avoid hard stops, except in emergencies, to allow the brakes to seat properly.
- Don't tow a trailer during the first 2,000 km (1,200 miles) of operation.
- Fuel economy and engine performance may vary depending on vehicle break-in process and stabilize after driving about 6,000 km. Engines may consume more oil during the vehicle break-in period.

Risk of burns when parking or stopping vehicle.

- Do not park or stop the vehicle near flammable items such as leaves, paper, oil, and tire. Such items placed near the exhaust system can become a fire hazard.
- When an engine idles at a high speed with the rear side of the vehicle touching the wall, heat of the exhaust gas can cause discoloration or fire. Keep enough space between the rear part of the vehicle and the wall.
- Be sure not to touch the exhaust/catalytic systems while engine is running or right after the engine is turned off. There is a risk of burns since the systems are extremely hot.

Your vehicle at a glance 2

Exterior overview 2-2
Interior overview 2-5
Instrument panel overview 2-7
Engine compartment 2-9

YOUR VEHICLE AT A GLANCE

Exterior overview

Front view

OSP2I019001

* The actual shape may differ from the illustration.

1. Hood	4-31
2. Head lamp (Features of your vehicle)	4-94
Head lamp (Maintenance)	8-76
3. Front fog lamp (Features of your vehicle)	4-98
Front fog lamp (Maintenance)	8-79
4. Wheel and tire (Maintenance)	8-43
Wheel and tire (Specification)	9-6
5. Outside rearview mirror	4-44
6. Sunroof	4-36

7. Front windshield wiper blades (Features of your vehicle) 4-102
Front windshield wiper blades (Maintenance) 8-38
8. Windows 4-26
9. Front ultrasonic sensors 4-88
10. Roof rack 4-140

Rear view

OSP2I019002

* The actual shape may differ from the illustration.

1. Door locks	4-18
2. Fuel filler door	4-33
3. Rear combination lamp (Maintenance)	8-71
4. High Mounted Stop Lamp (Maintenance)	8-82
5. Tailgate	4-23
6. Antenna	5-3
7. Tailgate open switch	4-23
8. Rear view camera	4-82
9. Rear ultrasonic sensors	4-85, 4-88
10.Rear window wiper	8-39

Interior overview

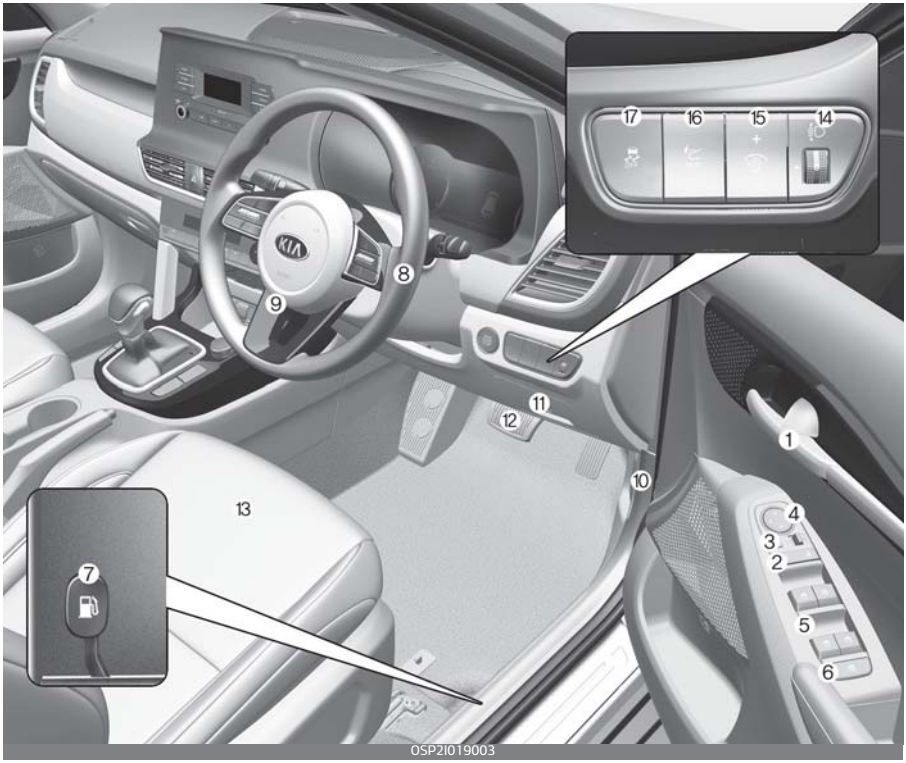

* The actual shape may differ from the illustration.

1. Inside door handle	4-19
2. Central Door lock/unlock switch	4-20
3. Outside rearview mirror folding*	4-46
4. Outside rearview mirror control	4-45
5. Power window switch	4-27
6. Power window lock switch	4-30
7. Fuel filler door open lever	4-33
8. Steering wheel	4-40
9. Tilt and telescopic steering control lever	4-42
10.Hood release lever	4-31
11.Inner fuse panel	8-60
12.Brake pedal	6-43
13.Seat	3-3

14.Headlight leveling device 4-99
15.Instrument panel illumination control switch 4-49
16.Head-Up Display shutter On/Off button* 4-80
17.ESC Off button* 6-49

*: if equipped

Instrument panel overview

OSP2I019004

* The actual shape may differ from the illustration.

1. Driver's front air bag	3-49
2. Horn	4-42
3. Instrument cluster	4-48
4. Light control/Turn signals lever	4-95
5. Wiper and washer control lever	4-100
6. ENGINE START/STOP button	6-10
7. Cruise button/LCD display control button	6-62, 4-54
8. Hazard warning flasher	7-3
9. Climate control system	4-112, 4-118
10.Shift lever	6-17, 6-21, 6-28, 6-37
11.Front seat air ventilation switch	4-132
12.360 Degree Camera system (SVM) button	4-84
Driving Rear View Monitoring button	4-82
13.Parking Distance Warning system button	4-88

14.Power outlet 4-132
15.USB port 5-3
16.USB charger 4-134
17.Drive mode integrated control system button 6-57
18.USB charger 4-134
19.Center console storage box 4-127
20.Cup holder 4-130
21.Glove box 4-127
22.Passenger's front air bag 3-49
23.Infotainment System 5-3
24.Parking brake 6-46

Engine compartment

Smartstream G1.4 T-GDi

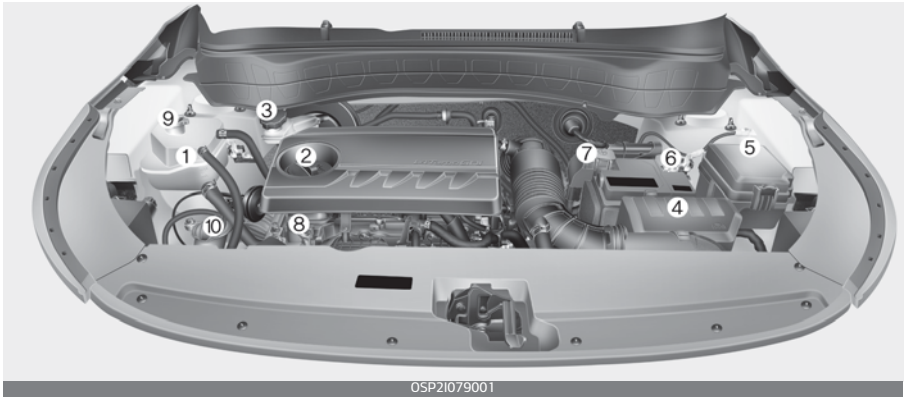

OSP2I079001

* The actual engine room in the vehicle may differ from the illustration.

1. Engine coolant reservoir	8-27
2. Engine oil filler cap	8-23
3. Brake/clutch fluid reservoir	8-30
4. Air cleaner	8-34
5. Fuse box	8-61
6. Negative battery terminal	7-6, 8-40
7. Positive battery terminal	7-6, 8-40
8. Engine oil dipstick	8-23
9. Radiator cap	7-9, 8-27
10. Windshield washer fluid reservoir	8-32

Smartstream G1.5

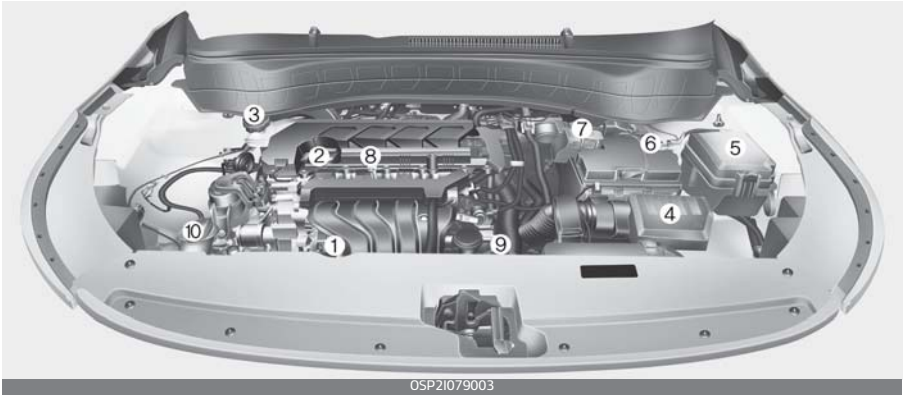

* The actual engine room in the vehicle may differ from the illustration.

1. Engine coolant reservoir	8-27
2. Engine oil filler cap	8-23
3. Brake/clutch fluid reservoir	8-30
4. Air cleaner	8-34
5. Fuse box	8-61
6. Negative battery terminal	7-6, 8-40
7. Positive battery terminal	7-6, 8-40
8. Engine oil dipstick	8-23
9. Radiator cap	7-9, 8-27
10. Windshield washer fluid reservoir	8-32

(Diesel) 1.5 VGT

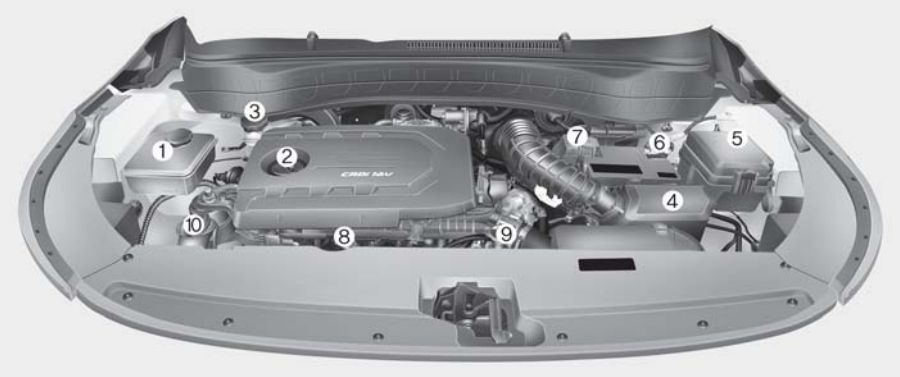

OSP2I079004

* The actual engine room in the vehicle may differ from the illustration.

1. Engine coolant reservoir	8-27
2. Engine oil filler cap	8-25
3. Brake/clutch fluid reservoir	8-30
4. Air cleaner	8-34
5. Fuse box	8-61
6. Negative battery terminal	7-6, 8-40
7. Positive battery terminal	7-6, 8-40
8. Engine oil dipstick	8-25
9. Radiator cap	7-9, 8-27
10. Windshield washer fluid reservoir	8-32

Safety features of your vehicle 3

Seat 3-3

• Feature of Seat Leather 3-6
• Front seat adjustment for manual seat 3-6
• Front seat adjustment for power seat 3-7
• Headrest (for front seat) 3-9
• Seatback pocket 3-12
• Rear seat adjustment 3-12
• Headrest (for rear seat) 3-16

Seat belts 3-18

• Seat belt restraint system 3-18
• Pre-tensioner seat belt 3-24
• Seat belt precautions 3-27
• Care of seat belts 3-29

Child restraint system (CRS) 3-30

• Our recommendation: Children always in the rear 3-30
• Selecting a Child Restraint System (CRS) 3-31
• Installing a Child Restraint System (CRS) 3-33

ISOFIX anchorage and top-tether anchorage (ISOFIX anchorage system) for children 3-34

• Securing a Child Restraint System with the "ISOFIX Anchorage System" 3-35
• Securing a Child Restraint System seat with "Top-tether Anchorage" system 3-36
• To install the tether anchor: 3-36
• Securing a Child Restraint System with a lap/shoulder belt 3-37

3 Safety features of your vehicle

- Suitability of each seating position for belted & ISOFIX Child Restraint Systems according to UN regulations (Information for vehicle users and CRS manufacturers) (for vehicle equipped with ISOFIX) 3-38
- Suitability of each seating position for belted & ISOFIX Child Restraint Systems according to UN regulations (Information for vehicle users and CRS manufacturers) (for vehicle without ISOFIX) 3-40

Air bag - supplemental restraint system 3-42

- How does the air bag system operate 3-43
- Air bag warning and indicator 3-46
- SRS components and functions 3-46
- Driver's and passenger's front air bag 3-49
- Side air bag 3-52
- Curtain air bag 3-53
- Air bag collision sensors 3-55
- Why didn't my air bag go off in a collision? (Inflation and non-inflation conditions of the air bag) ... 3-56
- SRS care 3-60
- Additional safety precautions 3-61
- Adding equipment to or modifying your air bag-equipped vehicle 3-61
- Air bag warning label 3-61

SAFETY FEATURES OF YOUR VEHICLE

Seat

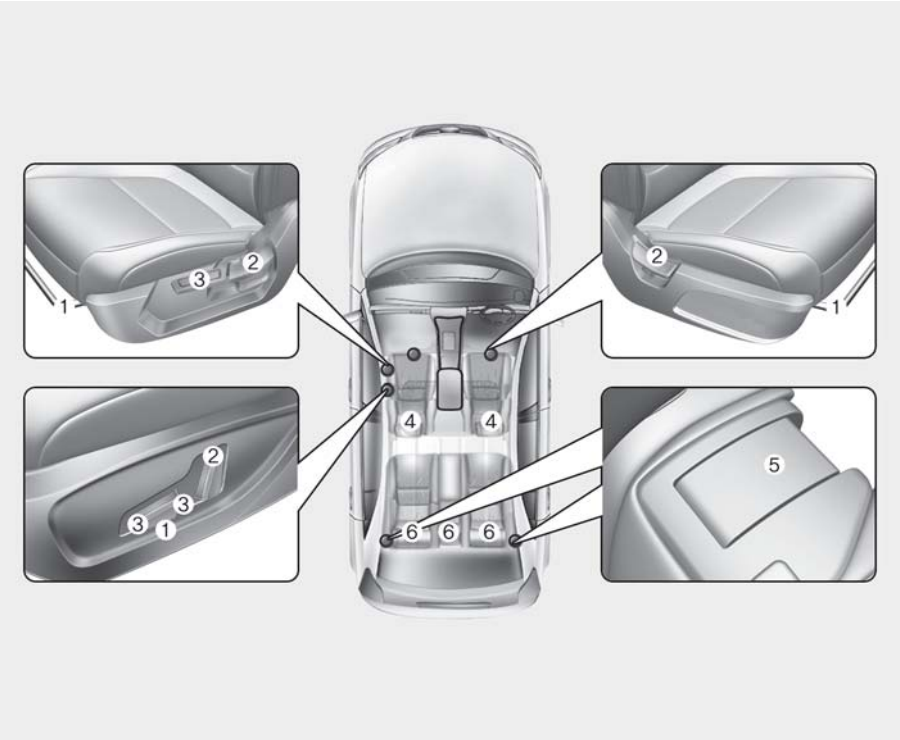

OSP2I039001

Front seat

1. Sliding: Forward and Backward
2. Reclining: Back angle
3. Seat cushion height*
4. Headrest

Rear seat

5. Seat back folding
6. Headrest

* : if equipped

⚠ WARNING

Loose objects

Loose objects in the driver's foot area could interfere with the operation of the foot pedals, possibly causing an accident. Do not place anything under the front seats.

⚠ WARNING

Driver responsibility for front seat passenger

Riding in a vehicle with a front seat-back reclined could lead to serious or fatal injury in an accident. If a front seat is reclined during an accident, the occupant's hips may slide under the lap portion of the seat belt applying great force to the unprotected abdomen. Serious or fatal internal injuries could result. The driver must advise the front passenger to keep the seatback in an upright position whenever the vehicle is in motion.

⚠ WARNING

Do not use a sitting cushion that reduces friction between the seat and passenger. The passenger's hips may slide under the lap portion of the seat belt during an accident or a sudden stop. Serious or fatal internal injuries could result because the seat belt can't operate normally.

⚠ WARNING

Driver's seat

- Never attempt to adjust seat while the vehicle is moving. This could result in loss of control, and an accident causing death, serious injury, or property damage.
- Do not allow anything to interfere with the normal position of the seatback. Storing items against a seatback or in any other way interfering with proper locking of a seatback could result in serious or fatal injury in a sudden stop or collision.
- Always drive and ride with your seatback upright and the lap portion of the seat belt snug and low across the hips. This is the best position to protect you in case of an accident.
- In order to avoid unnecessary and perhaps severe air bag injuries, always sit as far back as possible from the steering wheel while maintaining comfortable control of the vehicle. It is recommended that your chest is at least 250 mm (10 inches) away from the steering wheel.

⚠ WARNING

Rear seatbacks

- The rear seatback must be securely latched. If not, passengers and objects could be thrown forward resulting in serious injury or death in the event of a sudden stop or collision.
- Luggage and other cargo should be laid flat in the cargo area. If objects are large, heavy, or must be piled, they must be secured. Under no circumstances should cargo be piled higher than the seatbacks. Failure to follow these warnings could result in serious injury or death in the event of a sudden stop, collision or rollover.
- No passenger should ride in the cargo area or sit or lie on folded seatbacks while the vehicle is moving. All passengers must be properly seated in seats and restrained properly while riding.
- When resetting the seatback to the upright position, make sure it is securely latched by pushing it forward and backwards.

⚠ WARNING

After adjusting the seat, always check that it is securely locked into place by attempting to move the seat forward or backward without using the lock release lever. Sudden or unexpected movement of the driver's seat could cause you to lose control of the vehicle resulting in an accident.

⚠ WARNING

- Use extreme caution so that hands or other objects are not caught in the seat mechanisms while the seat is moving.
- Do not put a cigarette lighter on the floor or seat. When you operate the seat, gas may gush out of the lighter and cause fire.
- If there are occupants in the rear seats, be careful while adjusting the front seat position.
- Use extreme caution when picking small objects trapped under the seats or between the seat and the center console. Your hands might be cut or injured by the sharp edges of the seats mechanism.

Feature of Seat Leather

Leather is made from the outer skin of an animal, which goes through a special process to be available for use. Since it is a natural substance, each part differs in thickness or density.

- Wrinkles may appear as a natural result of stretching and shrinking depending on the temperature and humidity.
- The seat cover is made of stretchable material to improve comfort of passengers.
- The parts contacting the body are curved and the side supporting area is high which provides driving comfort and stability.

⚠ CAUTION

- Wrinkles or abrasions which appear naturally from usage are not covered by warranty.
- Belts with metallic accessories, zippers or keys inside the back pocket may damage the seat fabric.
- Make sure not to wet the seat. It may change the nature of natural leather.
- Jeans or clothes which could bleach may contaminate the surface of the seat covering fabric.

Front seat adjustment for manual seat (if equipped)

The front seat can be adjusted by using the control levers located on the outside of the seat cushion.

Moving forward and backward

Adjust the seat before driving, and make sure the seat is locked securely by trying to move forward and backward without using the lever. If the seat moves, it is not locked properly.

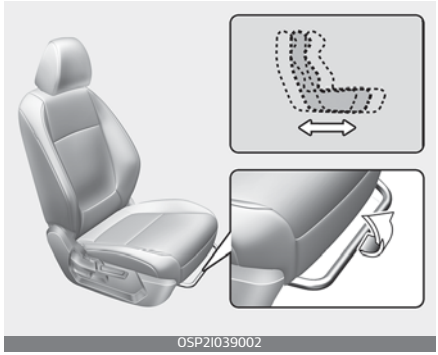

To move the seat forward or backward:

1. Pull the seat slide adjustment lever up and hold it.
2. Slide the seat to the position you desire.
3. Release the lever and make sure the seat is locked in place.

Adjust the seat before driving, and make sure the seat is locked securely by trying to move forward and backward without using the lever. If the seat moves, it is not locked properly.

Reclining seatback

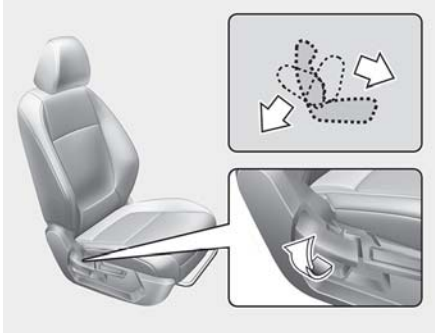
OSP2I039003

To recline the seatback:

1. Lean forward slightly and lift up the seatback recline lever.
2. Carefully lean back on the seat and adjust the seatback of the seat to the position you desire.
3. Release the lever and make sure the seatback is locked in place. (The lever MUST return to its original position for the seatback to lock.)

Changing seat cushion height (if equipped)

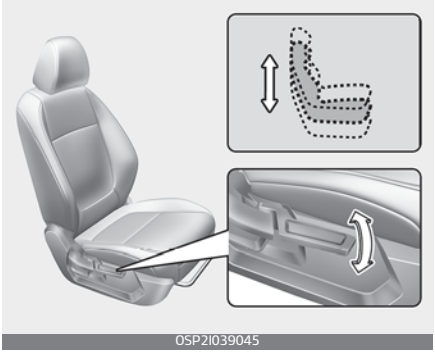
OSP2I039045

To change the height of the seat cushion, push the lever upwards or downwards.

- To lower the seat cushion, push down the lever several times.
- To raise the seat cushion, pull up the lever several times.

Front seat adjustment for power seat (if equipped)

The driver's seat can be adjusted by using the control switches located on the outside of the seat cushion. Before driving, adjust the seat to the proper position so as to easily control the steering wheel, pedals and switches on the instrument panel.

⚠ WARNING

The power seat is operable with the ignition OFF.

Therefore, children should never be left unattended in the car.

⚠ CAUTION

- The power seat is driven by an electric motor. Stop operating once the adjustment is completed. Excessive operation may damage the electrical equipment.
- When in operation, the power seat consumes a large amount of electrical power. To prevent unnecessary charging system drain, don't adjust the power seat longer than necessary while the engine is not running.
- Do not operate two or more power seat control switches at the same time. Doing so may result in power seat motor or electrical component malfunction.

Moving forward and backward

OSP2I039004

To move the seat forward or backward:

1. Push the control switch forward or rearward to move the seat to the desired position.
2. Release the switch once the seat reaches the desired position.

Reclining seatback

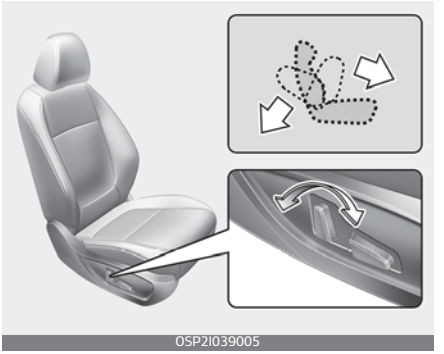

OSP2I039005

To recline the seatback:

1. Push the control switch forward or rearward to move the seatback to the desired angle.
2. Release the switch once the seat reaches the desired position.

Changing seat cushion tilt and height (if equipped)

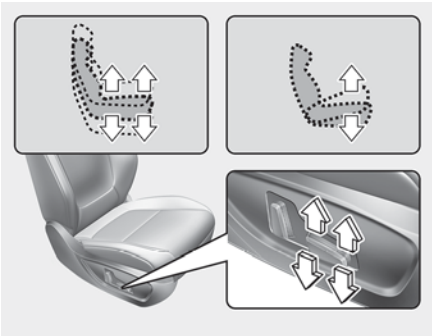

OSP2I039006

To change the height of the seat:

1. Pull the front portion of the control switch up to raise or press down to lower the front part of the seat cushion.
   Pull the rear portion of the control switch up to raise or press down to lower the seat cushion.
2. Release the switch once the seat reaches the desired position.

Headrest (for front seat)

The driver's and front passenger's seats are equipped with a headrest for the occupant's safety and comfort.

OSP2I039007

The headrest not only provides comfort for the driver and front passenger, but also helps protect the head and neck in the event of a collision.

⚠ WARNING

- For maximum effectiveness in case of an accident, the headrest should be adjusted so the middle of the headrest is at the same height of the center of gravity of an occupant's head. Generally, the center of gravity of most people's head is similar with the height of the top of their eyes. Also, adjust the headrest as close to your head as possible. For this reason, the use of a cushion that holds the body away from the seatback is not recommended.

- Do not operate the vehicle with the headrests removed or reversed as severe injury to the occupants may occur in the event of an accident. Headrests may provide protection against neck injuries when properly adjusted.
- Do not adjust the headrest position of the driver's seat while the vehicle is in motion.

Adjusting the height up and down

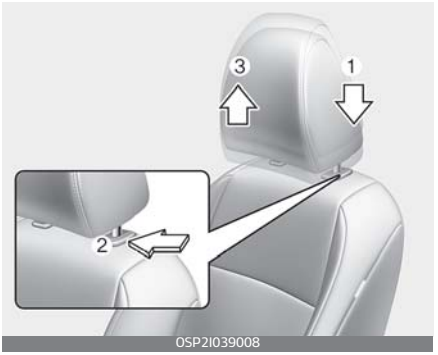

To raise the headrest:

1. Pull it up to the desired position (3).
2. To lower the headrest, push and hold the release button (2) on the headrest support.
3. Lower the headrest to the desired position (1).

⚠ WARNING

Make sure the headrest locks in position after adjusting it to properly protect the occupants.

⚠ CAUTION

If you recline the seatback towards the front with the headrest and seat cushion raised, the headrest may come in contact with the sun visor or other parts of the vehicle.

Removing headrest

Type A

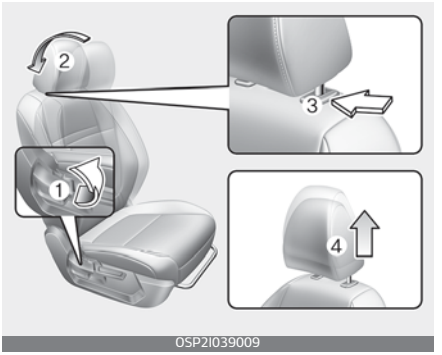

Type B

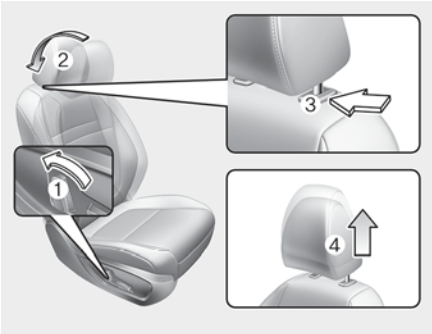

OSP2I039010

To remove the headrest:

1. Recline the seatback (2) with the recline lever or switch (1).
2. Raise headrest as far as it can go.
3. Press the headrest release button (3) while pulling the headrest up (4).

⚠ WARNING

NEVER allow anyone to ride in a seat with the headrest removed.

Reinstalling headrest

Type A

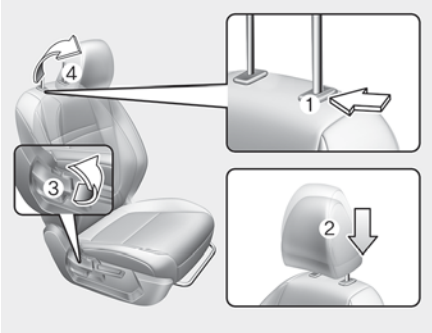

OSP2I039011

Type B

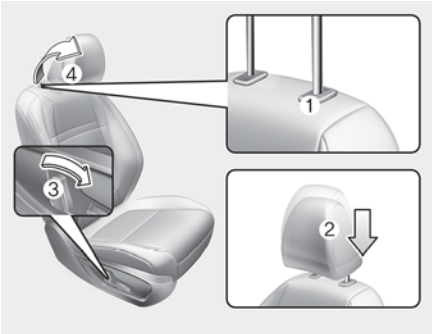

OSP2I039012

To reinstall the headrest:

1. Put the headrest poles (2) into the holes while pressing the release button (1).
2. Recline the seatback (4) with the recline lever or switch (3).
3. Adjust the headrest to the appropriate height.

⚠ WARNING

Always make sure the headrest locks into position after reinstalling and adjusting it properly.

Seatback pocket (if equipped)

The seatback pocket is provided on the back of the front passenger's and driver's seatback.

⚠ WARNING

Seatback pockets

Do not put heavy or sharp objects in the seatback pockets. In an accident they could come loose from the pocket and injure vehicle occupants.

Rear seat adjustment

Folding the rear seat

The rear seatbacks can be folded to facilitate carrying long items or to increase the luggage capacity of the vehicle.

⚠ WARNING

The purpose of the fold-down rear seatbacks is to allow you to carry longer objects that could not be accommodated in the cargo area.

Never allow passengers to sit on top of the folded down seatback while the vehicle is moving. This is not a proper seating position and no seat belts are available for use. This could result in serious injury or death in case of an accident or sudden stop. Objects carried on the folded down seatback should not extend higher than the top of the front seatbacks. This could allow cargo to slide forward and cause injury or damage during sudden stops.

To fold down the rear seatback

1. Insert the rear seat belt buckle in the pocket between the rear seatback and cushion.

Then, insert the seat belt into the two holes located on both sides.

2. Set the front seatback to the upright position and if necessary, slide the front seat forward.

For rear seatback type A, take the following steps:

Type A

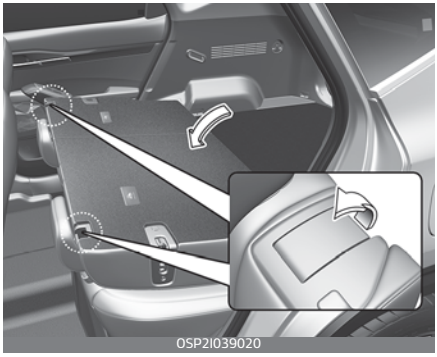

1. Lower the rear headrests to the lowest position.
2. Pull on the seatback folding lever, then fold the seat toward the front of the vehicle.

⚠ CAUTION

- Avoid excessive force when unfolding rear seat back.
- Unfolding the seat with excessive force may lead to lock seat back in 2nd step. This is natural phenomenon and adjust to the desired position if necessary. (applied to type 'A' only)

For rear seatback type B, take the following steps:

Type B

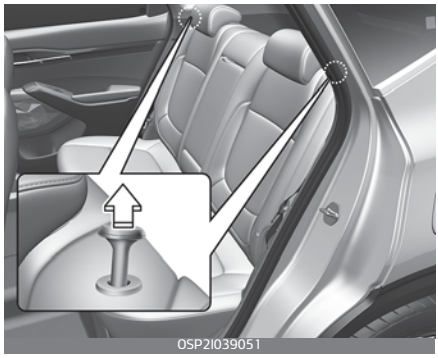

1. Pull up both sides of the seatback folding lever.

2. Fold the seat toward the front of the vehicle.

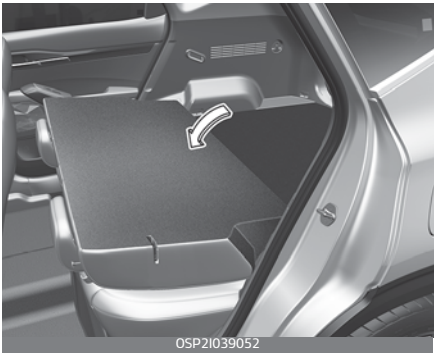

CAUTION

Damaging rear seat belt buckles

When you fold the rear seatback, insert the buckle in the pocket between the rear seatback and cushion. Doing so can prevent the buckle from being damaged by the rear seatback.

CAUTION

Rear seat belts

When returning the rear seatbacks to the upright position, remember to insert the rear shoulder belts tongue in the holder provided in Luggage side trim. This will avoid seat belt to be trapped in the back locking mechanism.

WARNING

Cargo

Cargo should always be secured to prevent it from being thrown about the vehicle in a collision and causing injury to the vehicle occupants. Do not place objects in the rear seats, since they cannot be properly secured and may hit the front seat occupants in a collision.

WARNING

Cargo loading

Make sure the engine is off, the Automatic Transmission/Dual Clutch Transmission/Intelligent Variable Transmission is in P (Park) or the manual transmission is in R (Reverse) or 1st, and the parking brake is securely applied whenever loading or unloading cargo. Failure to take these steps may allow the vehicle to move if the shift lever is inadvertently moved to another position.

To unfold the rear seat

⚠ WARNING

Uprighting seat

When you return the seatback to its upright position, hold the seatback and return it slowly. If the seatback is returned without holding it, the back of the seat could spring forward resulting in injury caused by being struck by the seatback.

1. Lift and pull the seatback backward and be careful not to be located the seat belt between the rear seat and vehicle body. Pull the seatback firmly until it clicks into place.

Type A

Type B

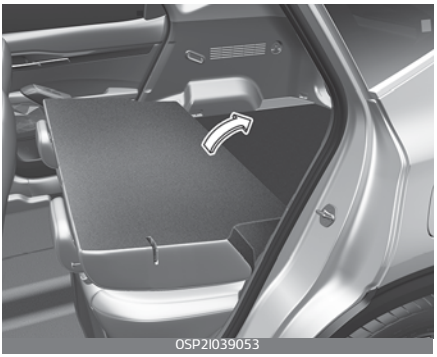

2. Make sure the seatback is locked in place. When you return the seatback to its upright position, always be sure it has locked into position by pushing on the top of the seatback.
   (For type A) If you can not see the red line at the bottom of folding lever, it means the seatback is locked completely.
3. Return the rear seat belt to the proper position.
4. When the seatback is completely installed, check the seatback folding lever again.

Headrest (for rear seat)

The rear seat(s) is equipped with headrests in all the seating positions for the occupant's safety and comfort.

OSP2I039014

The headrest not only provides comfort for passengers, but also helps protect the head and neck in the event of a collision.

⚠ WARNING

- For maximum effectiveness in case of an accident, the headrest should be adjusted so the middle of the headrest is at the same height as the center of gravity of an occupant's head. Generally, the center of gravity of most people's head is similar with the height of the top of their eyes. Also adjust the headrest as close to your head as possible. For this reason, the use of a cushion that holds the body away from the seatback is not recommended.
- Do not operate the vehicle with the headrests removed or reversed. Severe injury to an occupant may occur in the event of an accident. Headrests may provide protection against severe neck injuries when properly adjusted.
- When there is no occupant in the rear seats, adjust the height of the headrest to the lowest position. The rear seat headrest can reduce the visibility of the rear area.

Adjusting the height up and down (if equipped)

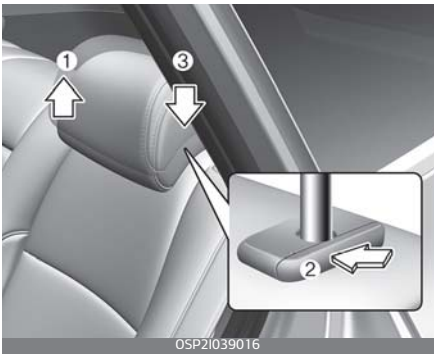

OSP2I039016

- To raise the headrest, pull it up to the desired position (1).
- To lower the headrest, push and hold the release button (2) on the headrest support and lower the headrest to the desired position (3).

Removal and installation (if equipped)

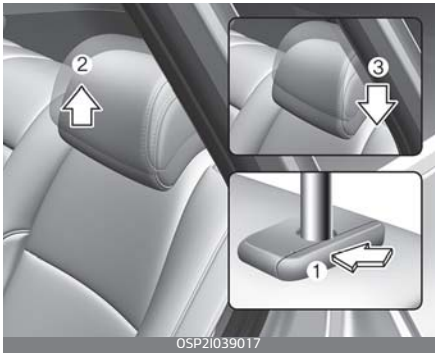

- To remove the headrest, raise it as far as it can go then press the release button (1) while pulling the headrest up (2).
- To reinstall the headrest, put the headrest poles (3) into the holes while pressing the release button (1).
- Then adjust it to the appropriate height.

⚠ WARNING

Make sure the headrest locks in position after adjusting it to properly protect the occupants.

Armrest (if equipped)

To use the armrest, pull it forward from the seatback.

Seat belts

Seat belts are designed to bear upon the bony structure of the body, and should be worn low across the front of the pelvis, chest and shoulders.

Seat belt restraint system

⚠ WARNING

- For maximum restraint system protection, the seat belts must always be used whenever the car is moving.
- Seat belts are most effective when seatbacks are in the upright position.
- Children age 13 and younger must always be properly restrained in the rear seat. Never allow children to ride in the front passenger seat. If a child over 13 must be seated in the front seat, he/she must be properly belted and the seat should be moved as far back as possible.
- Never wear the shoulder belt under your arm or behind your back. An improperly positioned shoulder belt can cause serious injuries in a crash. The shoulder belt should be positioned midway over your shoulder across your collarbone.
- Never wear a seat belt over fragile objects. If there is a sudden stop or impact, the seat belt can damage it.
- Avoid wearing twisted seat belts. A twisted belt can't do its job as well. In a collision, it could even cut into you. Be sure the belt webbing is straight and not twisted.
- Be careful not to damage the belt webbing or hardware. If the belt webbing or hardware is damaged, replace it.

⚠ WARNING

Seat belts are designed to bear upon the bony structure of the body, and should be worn low across the front of the pelvis or the pelvis, chest and shoulders, as applicable; wearing the lap section of the belt across the abdominal area must be avoided.

Seat belts should be adjusted as firmly as possible, consistent with comfort, to provide the protection for which they have been designed.

A slack belt will greatly reduce the protection afforded to the wearer.

Care should be taken to avoid contamination of the webbing with polishes, oils and chemicals, and particularly battery acid.

Cleaning may safely be carried out using mild soap and water. The belt should be replaced if webbing becomes frayed, contaminated or damaged. It is essential to replace the entire assembly after it has been worn in a severe impact even if damage to the assembly is not obvi-

ous. Belts should not be worn with straps twisted. Each belt assembly must only be used by one occupant; it is dangerous to put a belt around a child being carried on the occupant's lap.

⚠ WARNING

- No modifications or additions should be made by the user which will either prevent the seat belt adjusting devices from operating to remove slack, or prevent the seat belt assembly from being adjusted to remove slack.
- When you fasten the seat belt, be careful not to latch the seat belt in buckles of other seat. It's very dangerous and you may not be protected by the seat belt properly.
- Do not unfasten the seat belt and do not fasten and unfasten the seat belt repeatedly while driving. This could result in loss of control, and an accident causing death, serious injury, or property damage.
- When fastening the seat belt, make sure that the seat belt does not pass over objects that are hard or can break easily.
- Make sure there is nothing in the buckle. The seat belt may not be fastened securely.

Seat belt warning

The seat belt warning light and warning chime operate under the following conditions.

Driver's seat belt

- Regardless of the driver's seat belt fastening, the warning light will illuminate for approximately 6 seconds each time you turn the ignition switch ON. If the driver's seat belt is not fastened, the warning chime will sound for about 6 seconds and the waning light will stay turned ON until the driver's seat belt is fastened.
- If you start to drive without the driver's seat belt fastened, when you drive under 20 km/h or stop, the warning light will illuminate. When you drive 20 km/h or faster, the warning light will blink and warning chime will sound for approximately 100 seconds.
- When the driver's seat belt is unfastened during driving, the warning light will illuminate when the speed is under 20 km/h. When the speed is 20 km/h and faster, the warning light will blink and warning chime will sound for approximately 100 seconds.

Front Passenger's seat belt

- Regardless of the passenger's seat belt fastening, the warning light will illuminate for approximately 6 seconds each time you turn the ignition switch ON. If the passenger's seat belt is not fastened, the waning light will stay turned ON until the passenger's seat belt is fastened.
- If you start to drive without the passenger's seat belt fastened, when you drive under 20 km/h or stop, the warning light will illuminate. When you drive 20 km/h or faster, the warning light will blink and warning chime will sound for approximately 100 seconds.
- When the passenger's seat belt is unfastened during driving, the warning light will illuminate when the speed is under 20 km/h. When the speed is 20 km/h and faster, the warning light will blink and warning chime will sound for approximately 100 seconds.

Fastening the seat belt:

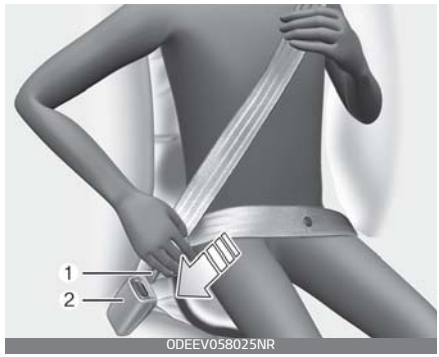

ODEEV058025NR

- To fasten your seat belt, pull it out of the retractor and insert the metal tab (1) into the buckle (2). There will be an audible "click" when the tab locks into the buckle.

The seat belt automatically adjusts to the proper length only after the lap belt portion is adjusted manually so that it fits snugly around your hips. If you lean forward in a slow, easy motion, the belt will extend and let you move around. If there is a sudden stop or impact, however, the belt will lock into position. It will also lock if you try to lean forward too quickly.

✻ NOTICE

If you are not able to pull out the seat belt from the retractor, firmly pull the belt out and release it. Then you will be able to pull the belt out smoothly.

⚠ WARNING

You should place the lap belt portion as low as possible and snugly across your hips, not on your waist. If the lap belt is located too high on your waist, it may increase the chance of injury in the event of a collision. Both arms should not be under or over the belt. Rather, one should be over and the other under, as shown in the illustration.

Never wear the seat belt under the arm near the door.

Releasing the seat belt:

ODEEV058078NR

- Press the release button (1) in the locking buckle.

When it is released, the belt should automatically draw back into the retractor.

If this does not happen, check the belt to be sure it is not twisted, then try again.

Adjusting the height of shoulder belt (if equipped)

You can adjust the height of the shoulder belt anchor to one of 3 positions for maximum comfort and safety.

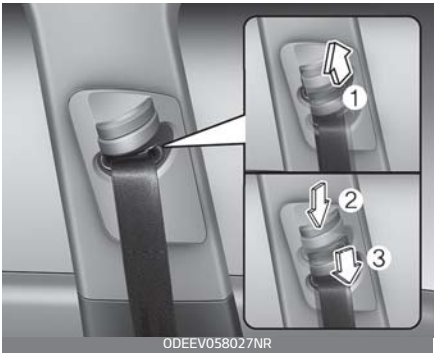

ODEEV058027NR

The height of the adjusting seat belt should not be too close to your neck. You will not be getting the most effective protection. The shoulder portion should be adjusted so that it lies across your chest and midway over your shoulder near the door and not your neck.

To adjust the height of the seat belt anchor, lower or raise the height adjuster into an appropriate posi- tion.

- To raise the height adjuster, pull it up (1).
- To lower it, push it down (3) while pressing the height adjuster button (2).

Release the button to lock the anchor into position. Try sliding the height adjuster to make sure that it has locked into position.

Improperly positioned seat belts can cause serious injuries in an accident.

⚠ WARNING

- Verify the shoulder belt anchor is locked into position at the appropriate height. Never position the shoulder belt across your neck or face.
- Failure to replace seat belts after an accident could leave you with damaged seat belts that will not provide protection in the event of another collision leading to personal injury or death. Replace your seat belts after being in an accident as soon as possible.

Fastening the rear center seat belt (lap belt):

1. To fasten a 2-point static type belt, insert the metal tab (1) into the locking buckle (2). There will be an audible "click" when the tab locks into the buckle.

OSP2I039047

2. Check to make sure the belt is properly locked and that the belt is not twisted.
   With a 2-point static type seat belt, the length must be adjusted manually so it fits snugly around your body.
3. Fasten the belt and pull on the loose end to tighten.

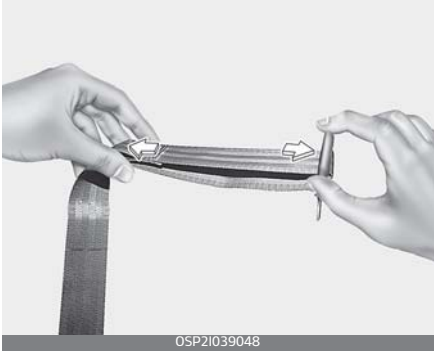
OSP2I039048

SP2i_RHD.book Page 23 Friday, September 25, 2020 3:01 PM

The belt should be placed as low as possible on your hips (1), not on your waist. If the belt is too high, it could increase the possibility of your being injured in an accident.

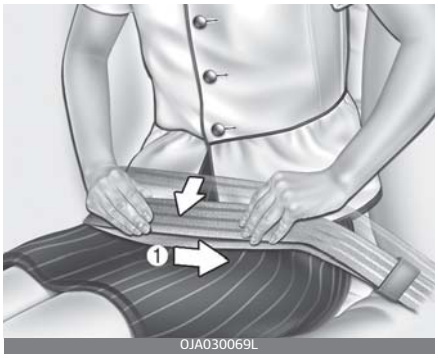

0JA030069L

When using the rear center seat belt, the buckle with the "CENTER" mark must be used.

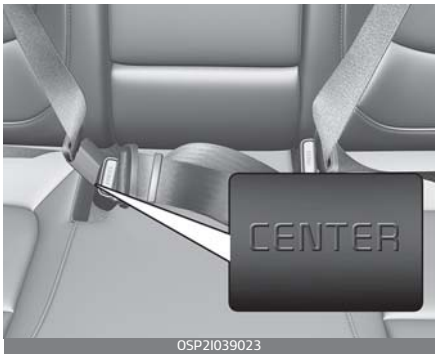

OSP2I039023

Releasing the rear center seat belt (lap belt):

OSP2I039049

- When you want to release the seat belt, press the button (1) in the locking buckle.

⚠ WARNING

The center lap belt latching mechanism is different from those for the rear seat shoulder belts. When fastening the rear seat shoulder belts or the center lap belt, make sure they are inserted into the correct buckles to obtain maximum protection from the seat belt system and assure proper operation.

Stowing the rear seat belt

The rear seat belt buckles can be stowed in the pocket between the rear seatback and cushion when not in use.

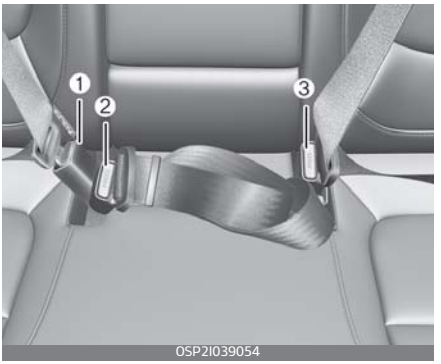

The seat belt should be locked into the buckle on each seat cushion to be properly fastened.

1. Rear right seat belt fastening buckle
2. Rear centre seat belt fastening buckle
3. Rear left seat belt fastening buckle

Pre-tensioner seat belt

Your vehicle is equipped with pre-tensioner seat belts at the front seating positions.

The purpose of the pre-tensioner is to make sure that the seat belts fit tightly against the occupant's body in certain collisions.

The pre-tensioner seat belts may be activated in crashes where the collision is severe enough.

When the vehicle stops suddenly, or if the occupant tries to lean forward too quickly, the seat belt retractor will lock into position. In certain frontal collisions, the pre-tensioner will activate and pull the seat belt into tighter contact against the occupant's body.

If the system senses excessive tension on the driver or passenger's seat belt when the pre-tensioner activates, the load limiter inside the pre-tensioner will release some of

the pressure on the affected seat belt.

⚠ WARNING

For your safety, be sure that the belt webbing is not loose or twisted and always sit properly on your seat.

✻ NOTICE

The pre-tensioner will activate not only in a frontal collision but also in a side collision, if the vehicle is equipped with a side or curtain air bag.

The seat belt pre-tensioner system consists mainly of the following components. Their locations are shown in the illustration:

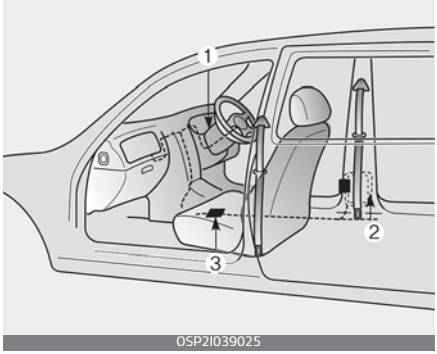

OSP2I039025

1. SRS air bag warning light
2. Retractor pre-tensioner assembly
3. SRS control module

⚠ WARNING

To obtain maximum benefit from a pre-tensioner seat belt:

1. The seatbelt must be working correctly and adjusted to the proper position. Please read and follow all of the important information and precautions about your vehicle's occupant safety features – including seat belts and air bags – that are provided in this manual.
2. Be sure you and your passengers always wear seat belts properly.

✻ NOTICE

- When the pre-tensioner seat belts are activated, a loud noise may be heard and fine dust, which may appear to be smoke, may be visible in the passenger compartment. These are normal operating conditions and are not hazardous.
- Although it is harmless, the fine dust may cause skin irritation and should not be breathed for prolonged periods. Wash all exposed skin areas thoroughly after an accident in which the pre-tensioner seat belts were activated.
- Because the sensor that activates the SRS air bag is connected with the pre-tensioner seat belt, the SRS air bag warning light on the instrument panel will illuminate for approximately 6 seconds after

the ignition switch has been turned to the "ON" position, and then it should turn off.

⚠ CAUTION

If the pre-tensioner seat belt is not working properly, the SRS air bag warning light will illuminate even if there is no malfunction of the SRS air bag. If the SRS air bag warning light does not illuminate when the ignition key is turned to ON, or if it remains illuminated after illuminating for approximately 6 seconds, or if it illuminates while the vehicle is being driven, have the system inspected by a professional workshop. Kia recommends to visit an authorized Kia dealer/service partner.

⚠ WARNING

- Pre-tensioners seat belts systems are designed to operate only one time. After activation, pre-tensioner seat belts must be replaced. All seat belts, of any type, should always be replaced after they have been worn during a collision.
- The pre-tensioner seat belt assembly mechanisms become hot during activation. Do not touch the pre-tensioner seat belt assemblies for several minutes after they have been activated.
- Do not attempt to inspect or replace the pre-tensioner seat belts yourself. Have the system inspected by a professional workshop. Kia recommends to visit an authorized Kia dealer/service partner.
- Do not attempt to service or repair the pre-tensioner seat belt system in any manner.
- Improper handling of the pre-tensioner seat belt assemblies, and failure to heed the warnings not to strike, modify, inspect, replace, service or repair the pre-tensioner seat belt assemblies may lead to improper operation or inadvertent activation and serious injury.
- Always wear the seat belts when driving or riding in a motor vehicle.
- If the vehicle or pre-tensioner seat belt must be discarded, contact a professional workshop. Kia recommends to visit an authorized Kia dealer/ service partner.
- Body work on the front area of the vehicle may damage the pre-tensioner seat belt system. Therefore, have the system serviced by a professional workshop. Kia recommends to visit an authorized Kia dealer/ service partner.

Seat belt precautions

⚠ WARNING

All occupants of the vehicle must wear their seat belts at all times. Seat belts and child restraints reduce the risk of serious or fatal injuries for all occupants in the event of a collision or sudden stop. Without a seat belt, occupants could be shifted too close to a deploying air bag, strike the interior structure or be thrown from the vehicle. Properly worn seat belts greatly reduce these hazards.

Always follow the precautions about seat belts, air bags and occupant seat contained in this manual.

Infant or small child

You should be aware of the specific requirements in your country. Child and/or infant seats must be properly placed and installed in the rear seat.

For more information about the use of these restraints, refer to "Child restraint system (CRS)" on page 3-30.

⚠ WARNING

Every person in your vehicle needs to be properly restrained at all times, including infants and children. Never hold a child in your arms or lap when riding in a vehicle. The violent forces created during a crash will tear the child from your arms and throw the child against the interior. Always use a child restraint appropriate for your child's height and weight.

✻ NOTICE

Small children are best protected from injury in an accident when properly restrained in the rear seat by a child restraint system that meets the requirements of the Safety Standards of your country. Before buying any child restraint system, make sure that it has a label certifying that it meets Safety Standards of your country. The restraint must be appropriate for your child's height and weight. Check the label on the child restraint for this information. Refer to "Child restraint system (CRS)" on page 3-30.

Larger children

Children who are too large for child restraint systems should always occupy the rear seat and use the available lap/shoulder belts. The lap portion should be fastened and snugged on the hips and as low as possible. Check if the belt fits periodically. A child's squirming could put the belt out of position. Children are afforded the most safety in the event of an accident when they are restrained by a proper restraint system in the rear seat. If a larger child (over age 13) must be seated in the front seat, the child should be securely restrained by the available lap/shoulder belt and the seat should be placed in the rearmost position. Children age 13 and under should be restrained securely in the rear seat. NEVER place a child age 13 and under in the front seat. NEVER place a rear facing child seat in the front seat of a vehicle.

If the shoulder belt portion slightly touches the child's neck or face, try placing the child closer to the center of the vehicle. If the shoulder belt still touches their face or neck they need to be returned to a child restraint system.

⚠ WARNING

Shoulder belts on small children

- Never allow a shoulder belt to be in contact with a child's neck or face while the vehicle is in motion.
- If seat belts are not properly worn and adjusted on children, there is a risk of death or serious injury.

Pregnant women

The use of a seat belt is recommended for pregnant women to lessen the chance of injury in an accident. When a seat belt is used, the lap belt portion should be placed as low and snugly as possible on the hips, not across the abdomen. For specific recommendations, consult a physician.

⚠ WARNING

Pregnant women

Pregnant women must never place the lap portion of the safety belt over the area of the abdomen where the fetus is located or above the abdomen where the belt could crush the fetus during an impact.

Injured person

A seat belt should be used when an injured person is being transported. When this is necessary, you should consult a physician for recommendations.

One person per belt

Two people (including children) should never attempt to use a single seat belt. This could increase the severity of injuries in case of an accident.

Do not lie down

To reduce the chance of injuries in the event of an accident and to achieve maximum effectiveness of the restraint system, all passengers should be sitting up and the front seats should be in an upright position when the car is moving. A seat belt cannot provide proper protection if the person is lying down in the rear seat or if the front seat is in a reclined position.

⚠ WARNING

Riding with a reclined seatback increases your chance of serious or fatal injuries in the event of a collision or sudden stop. The protection of your restraint system (seat belts and air bags) is greatly reduced by reclining your seat. Seat belts must be snug against your hips and chest to work properly. The more the seatback is reclined, the greater the chance that an occupant's hips will slide under the lap belt causing serious internal injuries or the occupant's neck could strike the shoulder belt. Drivers and passengers should always sit well back in their seats, properly belted, and with the seatbacks upright.

Care of seat belts

Seat belt systems should never be disassembled or modified. In addition, care should be taken to assure that seat belts and belt hardware are not damaged by seat hinges, doors or other abuse.

⚠ WARNING

- When you return the rear seatback to its upright position after the rear seatback was folded down, be careful not to damage the seat belt webbing or buckle. Be sure that the webbing or buckle does not get caught or pinched in the rear seat. A seat belt with damaged webbing or buckle will not be as strong and could possibly fail during a collision or sudden stop, resulting in serious injury. If the webbing or buckles are damaged, get them replaced immediately.

- Seat belts can become hot in a vehicle that has been closed up in sunny weather.
  They could burn infants and children.

Periodic inspection

It is recommended that all seat belts be inspected periodically for wear or damage of any kind. Any damaged parts should be replaced as soon as possible.

Keep belts clean and dry

Seat belts should be kept clean and dry. If belts become dirty, they can be cleaned by using a mild soap solution and warm water. Bleach, dye, strong detergents or abrasives should not be used because they may damage and weaken the fabric.

When to replace seat belts

Entire in-use seat belt assembly or assemblies should be replaced if the vehicle has been involved in an accident. This should be done even if no damage is visible. In this case, have the system replaced by a professional workshop. Kia recommends to consult an authorized Kia dealer/service partner.

Child restraint system (CRS)

Our recommendation: Children always in the rear

⚠ WARNING

Always properly restrain children in the vehicle. Children of all ages are safer when riding in the rear seats. Never place a rearward-facing Child Restraint System on the front passenger seat, unless the air bag is deactivated.

Children under age 13 should always ride in the rear seats and must always be properly restrained to minimize the risk of injury in an accident, sudden stop or sudden maneuver.

According to accident statistics, children are safer when properly restrained in the rear seats than in the front seat. Children too large for a Child Restraint System must use the seat belts provided.

Most countries have regulations which require children to travel in approved Child Restraint Systems.

The laws governing the age or height/weight restrictions at which seat belts can be used instead of Child Restraint System differs among countries, so you should be aware of the specific requirements in your country, and where you are travelling.

Child Restraint Systems must be properly installed in the vehicle seat. Always use a commercially available Child Restraint System that meets the requirements of your country.

Child Restraint System (CRS)

Infants and younger children must be restrained in an appropriate rearward-facing or forward-facing CRS that has first been properly secured to the seat of the vehicle. Read and comply with the instructions for installation and use provided by the manufacturer of the Child Restraint System.

⚠ WARNING

- Always follow the Child Restraint System manufacturer's instructions for installation and use.
- Always properly restrain your child in the Child Restraint System.
- Do not use an infant carrier or a child safety seat that "hooks" over a seatback, it may not provide adequate protection in an accident.
- After an accident, have the system checked by a professional workshop. Kia recommends to visit an authorized Kia dealer/service partner.

Selecting a Child Restraint System (CRS)

When selecting a Child Restraint System for your child, always:

- Make sure the Child Restraint System has a label certifying that it meets the applicable Safety Standards of your country.
  A Child Restraint System may only be installed if it was approved in accordance with the requirements of ECE-R44 or ECE-R129.
- Select a Child Restraint System based on your child's height and weight. The required label or the instructions for use typically provide this information.
- Select a Child Restraint System that fits the vehicle seating position where it will be used.
  For the suitability of Child Restraint Systems on the vehicle's seating positions, please refer to "Suitability of each seating position for belted & ISOFIX Child Restraint Systems according to UN regulations (Information for vehicle users and CRS manufacturers) (for vehicle equipped with ISOFIX)" on page 3-38, "Suitability of each seating position for belted & ISOFIX Child Restraint Systems according to UN regulations (Information for vehicle users and CRS manufacturers) (for vehicle without ISOFIX)" on page 3-40.

- Read and comply with the warnings and instructions for installation and use provided with the Child Restraint System.

Child restraint system types

There are three main types of Child Restraint Systems:
- Rearward-facing CRS
- Forward-facing CRS
- Booster seat

They are classified according to the child's age, height and weight.

Rearward-facing Child Restraint System

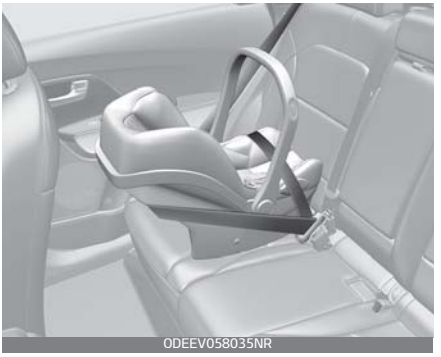
ODEEV058035NR

A rearward-facing Child Restraint System provides restraint with the seating surface against the back of the child. The harness system holds the child in place, and in an accident, acts to keep the child positioned in the Child Restraint Systems and reduce the stress to the fragile neck and spinal cord.

All children under the age of one year must always ride in a rearward-facing Child Restraint System. There are different types of rearward-facing Child Restraint Systems: infant-only Child Restraint Systems can only be used rearward-facing. Convertible and 3-in-1 Child Restraint Systems typically have higher height and weight limits for the rearward-facing position, allowing you to keep your child rearward-facing for a longer period of time.

Keep using Child Restraint Systems in the rearward-facing position as long as children fit within the height and weight limits allowed by the Child Restraint System's manufacturer.

Forward-facing Child Restraint System

ODEEV058036NR

A forward-facing Child Restraint System provides restraint for the child's body with a harness. Keep children in a forward-facing Child Restraint System with a harness until they reach the top height or weight limit allowed by your Child Restraint System's manufacturer.

Once your child outgrows the forward-facing Child Restraint System, your child is ready for a booster seat.

Booster seats

A booster seat is a Child Restraint System designed to improve the fit of the vehicle's seat belt system. A booster seat positions the seat belt so that it fits properly over the stronger parts of your child's body. Keep your children in booster seats until they are big enough to fit in a seat belt properly.

For a seat belt to fit properly, the lap belt must lie comfortable across the upper thighs, not the stomach. The shoulder belt should lie comfortable across the shoulder and chest and not across the neck or face. Children under age 13 must always be properly restrained to minimize the risk of injury in an accident, sudden stop or sudden maneuver.

Installing a Child Restraint System (CRS)

⚠ WARNING

Before installing your Child Restraint System always:

Read and follow the instructions provided by the manufacturer of the Child Restraint System.

Failure to follow all warnings and instructions could increase the risk of the SERIOUS INJURY or DEATH if an accident occurs.

⚠ WARNING

If the vehicle's headrest prevents proper installation of a Child Restraint System, the headrest of the respective seating position shall be readjusted or entirely removed.

After selecting a proper Child Restraint System for your child and checking that the Child Restraint System fits properly on the seating position, there are three general steps for a proper installation:

- **Properly secure the Child Restraint System to the vehicle.** All Child Restraint Systems must be secured to the vehicle with the lap belt or lap part of a lap/shoulder belt or with the ISOFIX top-tether and/or ISOFIX anchorage and/or with the support leg.

ISOFIX anchorage and top-tether anchorage (ISOFIX anchorage system) for children (if equipped)

The ISOFIX system holds a Child Restraint System during driving and in an accident. This system is designed to make installation of the Child Restraint System easier and reduce the possibility of improperly installing your Child Restraint System. The ISOFIX system uses anchors in the vehicle and attachments on the Child Restraint System. The ISOFIX system eliminates the need to use seat belts to secure the Child Restraint System to the rear seats.

ISOFIX anchorages are metal bars built into the vehicle. There are two lower anchors for each ISOFIX seating position that will accommodate a Child Restraint System with lower attachments.

To use the ISOFIX system in your vehicle, you must have a Child Restraint System with ISOFIX attachments.

The Child Restraint System manufacturer will provide you with instructions on how to use the Child Restraint System with its attachments for the ISOFIX anchorages.

ISOFIX anchorages have been provided in the left and right outboard rear seating positions. Their locations are shown in the illustration.

⚠ WARNING

Do not attempt to install a Child Restraint System using ISOFIX anchorages in the rear center seating position. There are no ISOFIX anchorages provided for this seat. Using the outboard seat anchorages, for the CRS installation on the rear center seating position, can damage the anchorages.

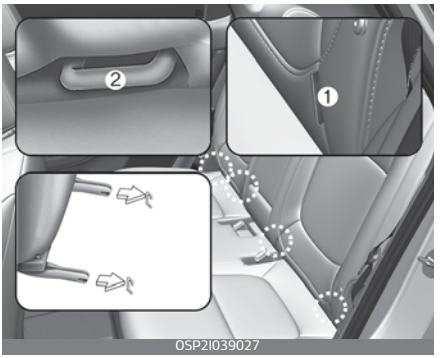

1. ISOFIX Anchor Position Indicator
2. ISOFIX Anchor

ISOFIX anchorages are located between the seatback and the seat cushion of the rear seat left and right outboard seating positions, indicated by the symbols.

Securing a Child Restraint System with the "ISOFIX Anchorage System" (if equipped)

To install a ISOFIX-compatible Child Restraint System in either of the rear outboard seating positions:

1. Move the seat belt buckle away from the ISOFIX anchorages.
2. Move any other objects away from the anchorages that could prevent a secure connection between the Child Restraint System and the ISOFIX anchorages.
3. Place the Child Restraint System on the vehicle seat, then attach the seat to the ISOFIX anchorages according to the instructions provided by the Child Restraint System manufacturer.
4. Follow the instructions of the Child Restraint System's manufacturer for proper installation and connection of the ISOFIX attachments on the Child Restraint System to the ISOFIX anchorages.

⚠ WARNING

Take the following precautions when using the ISOFIX system:

- Read and follow all installation instructions provided with your Child Restraint System.
- To prevent the child from reaching and taking hold of unretracted seat belts, buckle all unused rear seat belts and retract the seat belt webbing behind the child. Children can be strangled if a shoulder belt becomes wrapped around their neck and the seat belt tightens.
- NEVER attach more than one Child Restraint System to a single anchorage. This could cause the anchor or attachment to come loose or break.
- Always have the ISOFIX (i- Size) system inspected by your dealer after an accident. An accident can damage the ISOFIX system and may not properly secure the Child Restraint System.

Securing a Child Restraint System seat with "Top-tether Anchorage" system (if equipped)

Child restraint system top tether anchorages are located on the back of the rear seatbacks.

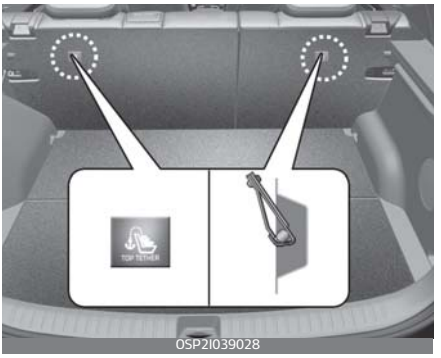

OSP2I039028

To install the tether anchor:

ODEEV058040NR

1. Route the Child Restraint System top-tether strap over the seat-back. Placing the top tether strap, please follow the instructions of the Child Restraint System manufacturer.
2. Connect the top-tether strap to the top-tether anchorage, then tighten the top-tether strap according to the instructions of your Child Restraint System's manufacturer to firmly attach the Child Restraint System to the seat.

⚠ WARNING

Take the following precautions when installing the top-tether:

- Read and follow all installation instructions provided with your Child Restraint System.
- NEVER attach more than one Child Restraint System to a single ISOFIX top-tether anchorage. This could cause the anchorage or attachment to come loose or break.
- Do not attach the top-tether to anything other than the correct top-tether anchorage. It may not work properly if attached to something else.
- Child Restraint System anchorages are designed to withstand only those loads imposed by correctly fitted Child Restraint System.
  Under no circumstances are they to be used for adult seat belts or harnesses or for attaching other items or equipment to the vehicle.

Securing a Child Restraint System with a lap/shoulder belt

When not using the ISOFIX system, all Child Restraint Systems must be secured to a rear seat with the lap part of a lap/shoulder belt.

ODEEV058041NR

To install a Child Restraint System on the rear seats, do the following:

1. Place the Child Restraint System on a rear seat and route the lap/shoulder belt around or through the Child Restraint System, following the Child Restraint System manufacturer's instructions. Make sure the seat belt webbing is not twisted.
2. Fasten the lap/shoulder belt latch into the buckle. Listen for the distinct "click" sound. Position the release button so that it is easy to access in case of an emergency.

ODEEV058042NR

3. Remove as much slack from the belt as possible by pushing down on the Child Restraint System while feeding the shoulder belt back into the retractor.
4. Push and pull on the Child Restraint System to confirm that the seat belt is holding it firmly in place.

If your Child Restraint System manufacturer recommends the use of a top-tether with the lap/shoulder belt.

To remove the Child Restraint System, press the release button on the buckle and then pull the lap/shoulder belt out of the Child Restraint System and allow the seat belt to retract fully.

Suitability of each seating position for belted & ISOFIX Child Restraint Systems according to UN regulations (Information for vehicle users and CRS manufacturers) (for vehicle equipped with ISOFIX)

- Yes: Suitable for fitment of the designated category of CRS
- No: Not suitable for fitment of the designated category of CRS
- "-": Not applicable
- The table is based on LHD vehicle. Except for the front passenger seat, the table is valid for RHD vehicle. For RHD vehicle front passenger seat, please use information for the seating position number 3.

F: Forward facing

R: Rearward facing

CRS categories		Seating positions					
		1, 2	3		4	5	6
			POWER	MANUAL			
Universal belted CRS		-	Yes*1 F, R	No	Yes F, R	Yes F	Yes F, R
i-Size CRS (with support leg)	ISOFIX (F2,F2X,R1,R2)	-	No	No	No	No	No
ISOFIX infant CRS (i.e., CRS for a baby)	ISOFIX (R1)	-	No	No	Yes R	No	Yes R
Carry cot (ISOFIX lateral facing CRS)	ISOFIX (L1,L2)	-	No	No	No	No	No
ISOFIX toddler CRS - small	ISOFIX (F2,F2X, R2)	-	No	No	Yes F, R	No	Yes F, R
ISOFIX toddler CRS - large* (*: not booster seats)	ISOFIX (F3, R3)	-	No	No	Yes F, R*2	No	Yes F, R*2
Booster seat-Reduced width	ISO/B2	-	No	No	Yes	No	Yes
Booster seat-Full width	ISO/B3	-	No	No	Yes	No	Yes

*1. Should be adjusted seat pumping properly, and CRS should not be installed for manual seat (not equipped pumping function)

*2. For fitment of ISOFIX toddler's rearward facing large CRS
- Driver's seat: Seat pumping should be adjusted to appropriate height.
- Front passenger seat: Seat sliding should be adjusted to appropriate position.

* Never place a rearward facing Child Restraint System on the front passenger seat, unless the passenger air bag is deactivated.
* It is recommended to remove the head restraint, when CRS is unstable due to head restraint.

OSP2I039029

Seat Number	Position in the vehicle
1	Front right
2	Front center
3	Front left
4	2nd row left
5	2nd row center
6	2nd row right

Suitability of each seating position for belted & ISOFIX Child Restraint Systems according to UN regulations (Information for vehicle users and CRS manufacturers) (for vehicle without ISOFIX)

- Yes: Suitable for fitment of the designated category of CRS
- No: Not suitable for fitment of the designated category of CRS
- "-": Not applicable
- The table is based on LHD vehicle. Except for the front passenger seat, the table is valid for RHD vehicle. For RHD vehicle front passenger seat, please use information for the seating position number 3.

F: Forward facing

R: Rearward facing

CRS categories		Seating positions					
		1, 2	3		4	5	6
			Power	Manual			
Universal belted CRS		-	Yes*1 F, R	No	Yes F, R	Yes F	Yes F, R
i-Size CRS (with support leg)	ISOFIX (F2,F2X,R1,R2)	-	No	No	No	No	No
ISOFIX infant CRS (i.e., CRS for a baby)	ISOFIX (R1)	-	No	No	No	No	No
Carry cot (ISOFIX lateral facing CRS)	ISOFIX (L1,L2)	-	No	No	No	No	No
ISOFIX toddler CRS - small	ISOFIX (F2,F2X, R2)	-	No	No	No	No	No
ISOFIX toddler CRS - large* (*: not booster seats)	ISOFIX (F3, R3)	-	No	No	No	No	No
Booster seat-Reduced width	ISO/B2	-	No	No	No	No	No
Booster seat-Full width	ISO/B3	-	No	No	No	No	No

*1. Should be adjusted seat pumping properly, and CRS should not be installed for manual seat (not equipped pumping function)

* Never place a rearward facing Child Restraint System on the front passenger seat, unless the passenger air bag is deactivated.

* It is recommended to remove the head restraint, when CRS is unstable due to head restraint.

OSP2I039029

Seat Number	Position in the vehicle
1	Front right
2	Front center
3	Front left
4	2nd row left
5	2nd row center
6	2nd row right

Air bag – supplemental restraint system

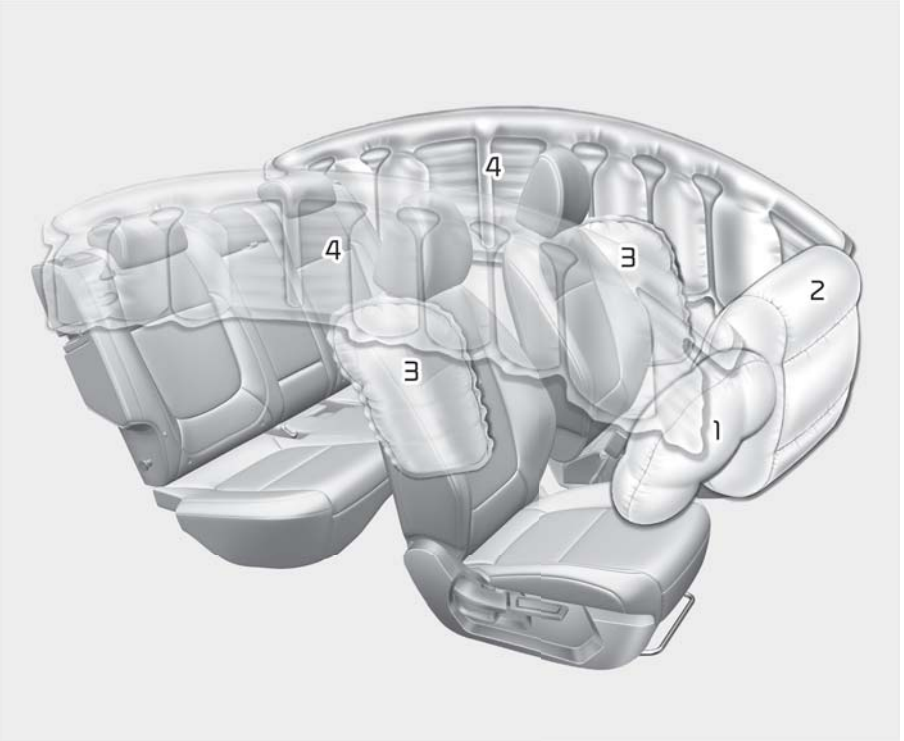

OSP2I039030

* The actual air bags in the vehicle may differ from the illustration.

1. Driver's front air bag
2. Passenger's front air bag
3. Side air bag*
4. Curtain air bag*

* : if equipped

⚠ WARNING

- Even in vehicles with air bags, you and your passengers must always wear the safety belts provided in order to minimize the risk and severity of injury in the event of a collision or in most rollover situations.
- SRS and pre-tensioners contain explosive chemicals.
  If scraping a vehicle without removing SRS and pre-tensioners from a vehicle, it may cause fire. Before scraping a vehicle, contact a professional workshop. Kia recommends to visit an authorized Kia dealer/service partner.
- Keep the SRS parts and wirings away from water or any liquid. If the SRS components are inoperative due to exposure to water or liquids, it may cause fire or severe injury.

How does the air bag system operate

- Air bags are activated (able to inflate if necessary) only when the ignition switch is turned to the ON or START position.
- Air bags inflate instantly in the event of serious frontal or side collision (if equipped with side air bag or curtain air bag) in order to help protect the occupants from serious physical injury.
- There is no single speed at which the air bags will inflate.
  Generally, air bags are designed to inflate based upon the severity of a collision and its direction. These two factors determine whether the sensors produce an electronic deployment/ inflation signal.
- Air bag deployment depends on a number of factors including vehicle speed, angles of impact and the density and stiffness of the vehicles or objects which your vehicle hits in the collision. The determining, factors are not limited to those mentioned above.
- The front air bags will completely inflate and deflate in an instant. It is virtually impossible for you to see the air bags inflate during an accident. It is much more likely that you will simply see the deflated air bags hanging out of their storage compartments after the collision.
- In order to help provide protection in a severe collision, the air bags must inflate rapidly. The speed of air bag inflation is a consequence of extremely short time in which a collision occurs and the need to get the air bag between the occupant and the vehicle structures before the occupant impacts those structures. This speed of inflation reduces the risk of serious or life-threatening injuries in

a severe collision and is thus a necessary part of air bag design.
- However, air bag inflation can also cause injuries which can include facial abrasions, bruises and broken bones because the inflation speed also causes the air bags to expand with a great deal of force.
- **There are even circumstances under which contact with the steering wheel air bag can cause fatal injuries, especially if the occupant is positioned excessively close to the steering wheel.**

⚠ WARNING

- To avoid severe personal injury or death caused by deploying air bags in a collision, the driver should sit as far back from the steering wheel air bag. The front passenger should always move their seat as far back as possible and sit back in their seat.
- Air bag inflates instantly in an event of a collision, passengers may be injured by the air bag expansion force if they are not in a proper position.
- Air bag inflation may cause injuries including facial or bodily abrasions, injuries from broken glasses or burns.

Noise and smoke

When the air bags inflate, they make a loud noise and they leave smoke and powder in the air inside of the vehicle. This is normal and is a result of the ignition of the air bag inflator. After the air bag inflates, you may feel substantial discomfort in breathing due to the contact of your chest with both the seat belt and the air bag, as well as from breathing the smoke and powder. **Open your doors and/or windows as soon as possible after impact in order to reduce discomfort and prevent prolonged exposure to the smoke and powder.**

Though smoke and powder are non-toxic, it may cause irritation to the skin (eyes, nose and throat, etc.). If this is the case, wash and rinse with cold water immediately and consult the doctor if the symptom persists.

⚠ WARNING

- When the air bags deploy, the air bag related parts in the steering wheel and/or instrument panel and/or in both sides of the roof rails above the front and rear doors are very hot. To prevent injury, do not touch the air bag storage areas internal components immediately after an air bag has inflated.

- Do not install or place any accessories near air bag deployment areas, such as the instrument panel, windows, pillars, and roof rails.

Front passenger's air bag warning label for child restraint system

⚠ WARNING

Never place a rearward facing child restraint in the front passenger seat, unless the passenger-side air bag is deactivated. An inflating passenger-side air bag could impact the rearwardfacing child restraint and kill the child.

In addition, we recommend that you do not place front-facing child restraints in the front passenger's seat either. If the front passenger air bag inflates, it could cause serious or fatal injuries to the child.

If your vehicle is equipped with the passenger's front air bag ON/OFF switch, you can activate or deactivate the front passenger's air bag when necessary.

For more details, please refer to "Child restraint system (CRS)" on page 3-30. (if equipped)

⚠ WARNING

- NEVER use a rearward facing child restraint on a seat protected by an ACTIVE AIR BAG in front of it. DEATH or SERIOUS INJURY to the CHILD can occur.
- When children are seated in the rear outboard seats of a vehicle equipped with side and/or curtain air bags, be sure to install the child restraint system as far away from the door side as possible, and securely lock the child restraint system in position. Inflation of side and/or curtain air bags could cause serious injury or death to an infant or child.

Air bag warning and indicator

Air bag warning light

The purpose of the air bag warning light in your instrument panel is to alert you of a potential problem with your air bag - Supplemental Restraint System (SRS).

When the ignition switch is turned ON, the warning light should illuminate for approximately 6 seconds, then go off.

Have the system checked if:

- The light does not turn on briefly when you turn the ignition ON.
- The light stays on after illuminating for approximately 6 seconds.
- The light comes on while the vehicle is in motion.
- The light blinks when the ignition switch is in ON position.

SRS components and functions

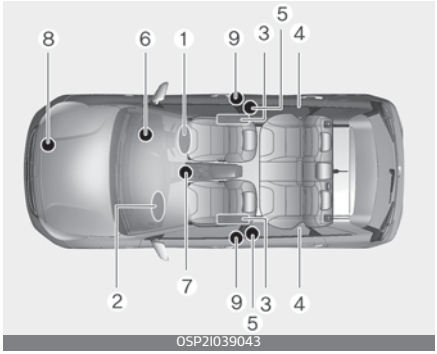

* The actual position of SRS components may differ from the illustration.

The SRS consists of the following components:

1. Driver's front air bag module
2. Passenger's front air bag module
3. Side air bag modules*
4. Curtain air bag modules*
5. Retractor pre-tensioner assemblies
6. Air bag warning light
7. SRS control module (SRSCM)
8. Front impact sensor
9. Side impact sensors*

*: if equipped

The SRSCM continually monitors all elements while the ignition switch is ON to determine if a frontal, near-frontal impact or side impact is severe enough to require air bag deployment or pre-tensioner seat belt deployment.

The SRS air bag warning light on the instrument panel will illuminate for about 6 seconds after the ignition switch is turned to the ON position, after which the air bag warning light should go out.

⚠ WARNING

If any of the following conditions occurs, this indicates a malfunction of the SRS. In this case, have the system inspected by a professional workshop. Kia recommends to visit an authorized Kia dealer/service partner.

- The light does not turn on briefly when you turn the ignition ON.
- The light stays on after illuminating for approximately 6 seconds.
- The light comes on while the vehicle is in motion.
- The light blinks when the ignition switch is in ON position.

Driver's front air bag (1)

ODEEV058048NR

The air bag modules are located both in the center of the steering wheel and in the front passenger's panel above the glove box. When the SRSCM detects a sufficiently severe impact to the front of the vehicle, it will automatically deploy the front air bags.

Driver's front air bag (2)

ODEEV058049NR

Upon deployment, tear seams molded directly into the pad covers will separate under pressure from the expansion of the air bags. Further opening of the covers then allows full inflation of the air bags.

Driver's front air bag (3)

ODEEV058050NR

A fully inflated air bag, in combination with a properly worn seat belt, slows the driver's or the passenger's forward motion, reducing the risk of head and chest injury.

After complete inflation, the air bag immediately starts deflating, enabling the driver to maintain forward visibility and the ability to steer or operate other controls.

Passenger's front air bag

ODEEV058051NR

⚠ WARNING

- Do not install or place any accessories (drink holder, CD holder, sticker, etc.) on the front passenger's panel above the glove box in a vehicle with a passenger's air bag. Such objects may become dangerous projectiles and cause injury if the passenger's air bag inflates.
- When installing a container of liquid air freshener inside the vehicle, do not place it near the instrument cluster nor on the instrument panel surface.
  It may become dangerous projectiles and cause injury if the passenger's air bag inflates.

⚠ WARNING

- If an air bag deploys, there may be a loud noise followed by a fine dust released in the vehicle. These conditions are normal and are not hazardous – the air bags are packed in this fine powder. The dust generated during air bag deployment may cause skin or eye irritation as well as aggravate asthma for some persons. Always wash all exposed skin areas thoroughly with cold water and a mild soap after an accident in which the air bags were deployed.

- The SRS can function only when the ignition key is in the ON position. If the SRS air bag warning light does not illuminate, or continuously remains on after illuminating for about 6 seconds when the ignition key is turned to the ON position, or after the engine is started, comes on while driving, the SRS is not working properly. In this case, have the system inspected by a professional workshop. Kia recommends to visit an authorized Kia dealer/service partner.
- Before you replace a fuse or disconnect a battery terminal, turn the ignition switch to the LOCK position and remove the ignition key or turn off the ENGINE START/STOP button. Never remove or replace the air bag related fuse(s) when the ignition switch is in the ON position. Failure to heed this warning will cause the SRS air bag warning light to illuminate.

Driver's and passenger's front air bag

Driver's front air bag

OSP2I039033

Passenger's front air bag

OSP2I039034

Your vehicle is equipped with a Supplemental Restraint (Air Bag) System and lap/shoulder belts at both the driver and passenger seating positions.

The indications of the system's presence are the letters "AIR BAG" intagliated on the air bag pad cover in the steering wheel and the passenger's side front panel pad above the glove box.

The SRS consists of air bags installed under the pad covers in the center of the steering wheel and the passenger's side front panel above the glove box.

The purpose of the SRS is to provide the vehicle's driver and/or the front passenger with additional protection than that offered by the seat belt system alone in case of a frontal impact of sufficient severity.

⚠ WARNING

The driver's hands should be placed on the steering wheel at the 9:00 and 3:00 positions. The passenger's arms and hands should be placed on their laps.

⚠ WARNING

Always use seat belts and child restraints – every trip, every time, everyone! Air bags inflate with considerable force and in the blink of an eye. Seat belts help keep occupants in proper position to obtain maximum benefit from the air bag. Even with air bags, improperly and unbelted occupants can be severely injured when the air bag inflates. Always follow the precautions about seat belts, air bags and occupant safety contained in this manual.

To reduce the chance of serious or fatal injuries and receive the maximum safety benefit from your restraint system:

- Never place a child in any child or booster seat in the front seat.
- ABC – Always Buckle Children in the back seat. It is the safest place for children of any age to ride.
- Front and side air bags can injure occupants improperly positioned in the front seats.
- Move your seat as far back as practical from the front air bags, while still maintaining control of the vehicle.
- You and your passengers should never sit or lean unnecessarily close to the air bags. Improperly positioned drivers and passengers can be severely injured by inflating air bags.
- Never lean against the door or center console – always sit in an upright position.
- No objects should be placed over or near the air bag modules on the steering wheel, instrument panel, and the front passenger's panel above the glove box, because any such object could cause harm if the vehicle is in a crash severe enough to cause the air bags to deploy.

- Do not tamper with or disconnect SRS wiring or other components of the SRS system. Doing so could result in injury, due to accidental deployment of the air bags or by rendering the SRS inoperative.
- If the SRS air bag warning light remains illuminated while the vehicle is being driven, have the system inspected by a professional workshop. Kia recommends to visit an authorized Kia dealer/service partner.
- Air bags can only be used once – have the system replaced by a professional workshop.
  Kia recommends to visit an authorized Kia dealer/service partner.
- The SRS is designed to deploy the front air bags only when an impact is sufficiently severe and when the impact angle is less than 30° from the forward longitudinal axis of the vehicle. Additionally, the air bags will only deploy once. Seat belts must be worn at all times.
- Front air bags are not intended to deploy in side-impact, rear-impact or rollover crashes. In addition, front air bags will not deploy in frontal crashes below the deployment threshold.
- A child restraint system must never be placed in the front seat. The infant or child could be severely injured or killed by an air bag deployment in case of an accident.
- Children age 13 and under must always be properly restrained in the rear seat. Never allow children to ride in the front passenger seat. If a child over age 13 must be seated in the front seat, he or she must be properly belted and the seat should be moved as far back as possible.
- For maximum safety protection in all types of crashes, all occupants including the driver should always wear their seat belts whether or not an air bag is also provided at their seating position to minimize the risk of severe injury or death in the event of a crash. Do not sit or lean unnecessarily close to the air bag while the vehicle is in motion.
- Sitting improperly or out of position can result in serious or fatal injury in a crash. All occupants should sit upright with the seat back in an upright position, centered on the seat cushion with their seat belt on, legs comfortably extended and their feet on the floor until the vehicle is parked and the ignition key is removed.

- The SRS air bag system must deploy very rapidly to provide protection in a crash. If an occupant is out of position because of not wearing a seat belt, the air bag may forcefully contact the occupant causing serious or fatal injuries.

Side air bag (if equipped)

Your vehicle is equipped with a side air bag in each front seat.

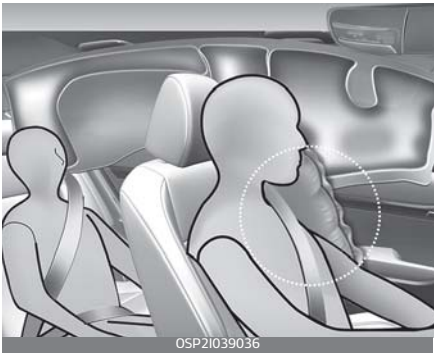

* The actual air bags in the vehicle may differ from the illustration.

The purpose of the air bag is to provide the vehicle's driver and/or the front passenger with additional protection than that offered by the seat belt alone.

The side air bags are designed to deploy only during certain side-impact collisions, depending on the crash severity, angle, speed and point of impact. The side air bags are not designed to deploy in all side impact situations.

⚠ WARNING

Do not allow the passengers to lean their heads or bodies onto doors, put their arms on the doors, stretch their arms out of the window, or place objects between the doors and passengers when they are seated on seats equipped with side and/or curtain air bags.

⚠ WARNING

- The side air bag is supplemental to the driver's and the passenger's seat belt systems and is not a substitute for them. Therefore your seat belts must be worn at all times while the vehicle is in motion. The air bags deploy only in certain side impact conditions severe enough to cause significant injury to the vehicle occupants.

- For best protection from the side air bag system and to avoid being injured by the deploying side air bag, both front seat occupants should sit in an upright position with the seat belt properly fastened.
- Do not use any accessory seat covers.
- Use of seat covers could reduce or prevent the effectiveness of the system.
- To prevent unexpected deployment of the side air bag that may result in personal injury, avoid impact to the side impact sensor when the ignition key is on.
- If the seat or seat cover is damaged, have the system serviced by a professional workshop. Kia recommends to visit an authorized Kia dealer/service partner.

⚠ WARNING

No attaching objects

- Do not place any objects over the air bag or between the air bag and yourself. Also, do not attach any objects around the area the air bag inflates such as the door, side door glass, front and rear pillar.
- Do not place any objects between the door and the seat. They may become dangerous projectiles if the side air bag inflates.
- Do not install any accessories on the side or near the side air bags.

Curtain air bag (if equipped)

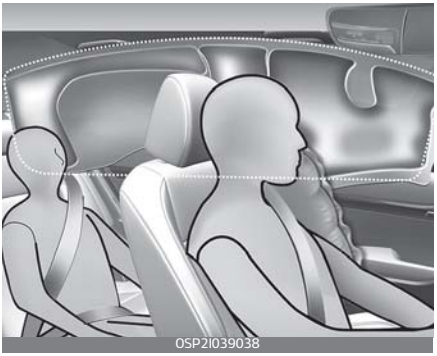

* The actual air bags in the vehicle may differ from the illustration.

Curtain air bags are located along both sides of the roof rails above the front and rear doors.

They are designed to help protect the heads of the front seat occupants and the rear outboard seat occupants in certain side impact collisions.

The curtain air bags are designed to deploy during certain side impact collisions, depending on the crash severity, angle, speed and point of impact. The curtain air bags are not designed to deploy in all side impact situations, collisions from the front or rear of the vehicle or in most roll-over situations.

⚠ WARNING

- Do not hang heavy items on the coat hooks for safety reasons.
- In order for side and curtain air bags to provide the best protection, both front seat occupants and both outboard rear occupants should sit in an upright position with the seat belts properly fastened.
  Importantly, children should sit in a proper child restraint system in the rear seat.
- When children are seated in the rear outboard seats, they must be seated in the proper child restraint system.
  Make sure to put the child restraint system as far away from the door side as possible, and secure the child restraint system in a locked position.
- Do not allow the passengers to lean their heads or bodies onto doors, put their arms on the doors, stretch their arms out of the window, or place objects between the doors and passengers when they are seated on seats equipped with side and/or curtain air bags.
- Never try to open or repair any components of the curtain air bag system. If necessary, have the system serviced by a professional workshop. Kia recommends to visit an authorized Kia dealer/service partner.

Failure to follow the above mentioned instructions can result in injury or death to the vehicle occupants in an accident.

⚠ WARNING

No attaching objects

- Do not place any objects over the air bag. Also, do not attach any objects around the area the air bag inflates such as the door, side door glass, front and rear pillar, roof side rail.
- Do not hang hard or breakable objects on the clothes hanger.

Air bag collision sensors

OSP2I039039

OSP2I039044

OSP2I039040

OSP2I039041

* The actual shape and position of sensors may differ from the illustration.

1. Supplemental Restraint System (SRS) control module
2. Front impact sensor
3. Side impact sensor (if equipped)

⚠ WARNING

- Do not hit or allow any objects to impact the locations where air bag or sensors are installed. This may cause unexpected air bag deployment, which could result in serious personal injury or death.
- If the installation location or angle of the sensors is altered in any way, the air bags may deploy when they should not or they may not deploy when they should, causing severe injury or death. Therefore, do not try to perform maintenance on or around the air bag sensors. Have the system serviced by a professional workshop. Kia recommends to visit an authorized Kia dealer/service partner.
- Problems may arise if the sensor installation angles are changed due to the deformation of the front bumper, body or B pillar where side collision sensors are installed. In this case, have the system serviced by a professional workshop. Kia recommends to visit an authorized Kia dealer/service partner.
- Your vehicle has been designed to absorb impact and deploy the air bag(s) in certain collisions. Installing bumper guards or replacing a bumper with non-genuine parts may adversely affect your vehicles collision and air bag deployment performance.

Why didn't my air bag go off in a collision? (Inflation and non-inflation conditions of the air bag)

There are many types of accidents in which the air bag would not be expected to provide additional protection.

These include rear impacts, second or third collisions in multiple impact accidents, as well as low speed impacts.

Air bag inflation conditions

Front air bags

Front air bags are designed to inflate in a frontal collision depending on the intensity, speed or angles of impact of the front collision.

Side and curtain air bags (if equipped)

OSP2039044

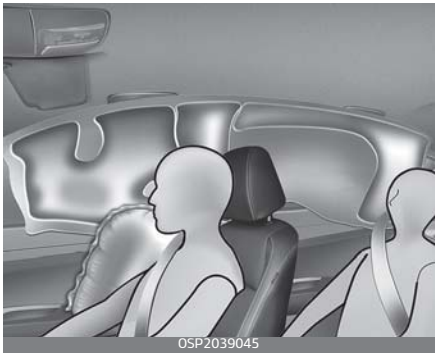
OSP2039045

* The actual air bags in the vehicle may differ from the illustration.

Side and/or curtain air bags are designed to inflate when an impact is detected by side collision sensors depending on the strength, speed or angles of impact resulting from a side impact collision.

Although the front air bags (driver's and front passenger's air bags) are designed to inflate only in frontal collisions, they also may inflate in other types of collisions if the front impact sensor detect a sufficient impact. Side air bags (side and/or curtain air bags) are designed to inflate only in side impact collisions, but they may inflate in other collisions if the side impact sensors detect a sufficient impact.

If the vehicle chassis is impacted by bumps or objects on unimproved roads or sidewalks, air bags may deploy. Drive carefully on unimproved roads or on surfaces not designed for vehicle traffic to prevent unintended air bag deployment.

Air bag non-inflation conditions

- In certain low-speed collisions the air bags may not deploy. The air bags are designed not to deploy in such cases because they may not provide benefits beyond the protection of the seat belts in such collisions.

OSP2039046

- Air bags are not designed to inflate in rear collisions, because occupants are moved backward by the force of the impact. In this case, inflated air bags would not be able to provide any additional benefit.

- Front air bags may not inflate in side impact collisions, because occupants move to the direction of the collision, and thus in side impacts, frontal air bag deployment would not provide additional occupant protection.

- However, if equipped with side and curtain air bags, the air bags may inflate depending on the intensity, vehicle speed and angles of impact.
- In an angled collision, the force of impact may direct the occupants in a direction where the air bags would not be able to provide any additional benefit, and thus the sensors may not deploy any air bags.

- Just before impact, drivers often brake heavily. Such heavy braking lowers the front portion of the vehicle causing it to "ride" under a vehicle with a higher ground clearance. Air bags may not inflate in this "under-ride" situation because deceleration forces that are detected by sensor may be significantly reduced by such "under-ride" collisions.

OSP2039050

- Air bags may not inflate in roll-over accidents because the vehicle can not detect rollover accident. However, side and/or curtain air bags may inflate when the vehicle is rolled over following (or after) side impact collision.

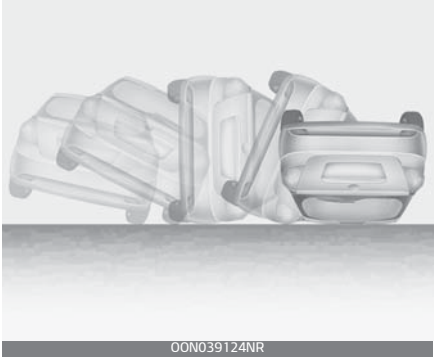

OON039124NR

- Air bags may not inflate if the vehicle collides with objects such as utility poles or trees, where the point of impact is concentrated to one area and the full force of the impact is not delivered to the sensor.

OSP2039051

SRS care

The SRS is virtually maintenance-free and so there are no parts you can safely service by yourself.

If the SRS air bag warning light does not illuminate, or continuously remains on, have the system inspected by a professional workshop. Kia recommends to visit an authorized Kia dealer/service partner.

⚠ WARNING

- Modification to SRS components or wiring, including the addition of any kind of badges to the pad covers or modifications to the body structure, can adversely affect SRS performance and lead to possible injury.
- For cleaning the air bag pad covers, use only a soft, dry cloth or one which has been moistened with plain water. Solvents or cleaners could adversely affect the air bag covers and proper deployment of the system.
- No objects should be placed over or near the air bag modules on the steering wheel, instrument panel, and the front passenger's panel above the glove box, because any such object could cause harm if the vehicle is in a crash severe enough to cause the air bags to inflate.
- If the air bags inflate, have the system replaced by a professional workshop. Kia recommends to visit an authorized Kia dealer/service partner.
- Do not tamper with or disconnect SRS wiring, or other components of the SRS system. Doing so could result in injury, due to accidental inflation of the air bags or by rendering the SRS inoperative.
- If components of the air bag system must be discarded, or if the vehicle must be scrapped, certain safety precautions must be observed. An authorized Kia dealer knows these precautions and can give you the necessary information. Failure to follow these precautions and procedures could increase the risk of personal injury.
- If your car was flooded and has soaked carpeting or water on flooring, you shouldn't try to start the engine; in this case, have your vehicle inspected by a professional workshop. Kia recommends to contact an authorized Kia dealer/service partner.

Additional safety precautions

- **Never let passengers ride in the cargo area or on top of a folded-down back seat.** All occupants should sit upright, fully back in their seats with their seat belts on and their feet on the floor.

Adding equipment to or modifying your air bag-equipped vehicle

If you modify your vehicle by changing your vehicle's frame, bumper system, front end or side sheet metal or ride height, this may affect the operation of your vehicle's air bag system.

Air bag warning label

Air bag warning labels are attached to alert driver and passengers of potential risk of air bag system.

Note that these government warnings focus on the risk of children. We also want you to be aware of the risks adults are exposed to which have been described in previous pages.

Features of your vehicle 4

Keys 4-6
• Record your key number 4-6
• Battery replacement 4-6
• Remote key 4-7
• Smart key 4-10
Theft-alarm system 4-16
• Armed stage 4-16
• Theft-alarm stage 4-17
• Disarmed stage 4-17
Door locks 4-18
• Operating door locks from outside the vehicle (for smart key) 4-18
• Operating door locks from inside the vehicle 4-19
• Door lock/unlock features 4-21
• Child-protector rear door lock 4-22
Tailgate 4-23
• Opening the tailgate 4-23
• Closing the tailgate 4-24
• Emergency tailgate safety release 4-24
Windows 4-26
• Window opening and closing 4-27
• Power window lock button 4-30
Hood 4-31
• Opening the hood 4-31
• Hood open warning 4-32
• Closing the hood 4-32
Fuel filler door 4-33
• Opening the fuel filler door 4-33

4 Features of your vehicle

• Closing the fuel filler door 4-34
Sunroof 4-36
• Sliding the sunroof 4-37
• Tilting the sunroof 4-38
• Sunshade 4-39
• Resetting the sunroof 4-39
• Sunroof open warning 4-39
Steering wheel 4-40
• Electric power steering (EPS) 4-40
• Tilt & telescopic steering wheel 4-41
• Horn 4-42
Mirrors 4-43
• Inside rearview mirror 4-43
• Outside rearview mirror 4-44
Instrument cluster 4-48
• Adjusting instrument cluster illumination 4-49
• Gauges 4-49
• Transmission shift indicator 4-52
LCD display 4-54
• LCD display modes 4-55
• Trip information (trip computer) 4-62
• Service mode 4-64
• Driving info display 4-65
• LCD display messages 4-65
Warning and indicator lights 4-69
• Warning lights 4-69
• Indicator lights 4-77
Head-Up Display (HUD) 4-80
• Head Up Display Information 4-81

Features of your vehicle 4

• Head up Display Setting 4-81
Rear View Monitor (RVM) 4-82
• Driving Rear View Monitor (DRVM) function 4-82
360 Degree Camera / Surround View Monitor (SVM) 4-84
Reverse Parking Distance Warning (PDW) 4-85
Forward/Reverse Parking Distance Warning (PDW) 4-88
Lighting 4-94
• Battery saver function 4-94
• Daytime Running Light (DRL) 4-95
• Lighting control 4-95
• Operating high beam 4-97
• Operating turn signals and lane change signals 4-97
• Operating front fog light 4-98
• Headlight leveling device 4-99
Wipers and washers 4-100
• Rain sensing wipers control 4-101
• Operating windshield washers 4-102
• Operating rear window wiper and washer switch 4-103
Interior lights 4-104
• Automatic turn off function 4-104
• Map lamp 4-104
• Room lamp 4-105
• Luggage room lamp 4-105
Welcome system 4-106
Defroster (if equipped) 4-106
• Operating rear window defroster 4-106
Climate control system 4-107
• System operation 4-107

4 Features of your vehicle

• Climate control air filter 4-109
• Checking the amount of air conditioner refrigerant and compressor lubricant..... 4-110
• Air conditioning refrigerant label 4-111
• Sunroof inside air recirculation 4-111
Manual climate control system 4-112
• Heating and air conditioning..... 4-113
Automatic climate control system 4-118
• Heating and air conditioning automatically 4-119
• Heating and air conditioning manually 4-120
Windshield defrosting and defogging..... 4-125
• Defogging inside windshield with manual climate control system 4-125
• Defrosting outside windshield with manual climate control system 4-126
• Defogging inside windshield with the automatic climate control 4-126
• Defrosting outside windshield with automatic climate control 4-126
Storage compartment 4-127
• Center console storage..... 4-127
• Glove box..... 4-127
• Sunglass holder..... 4-128
• Luggage net holder 4-129
• Luggage board 4-129
Interior features..... 4-130
• Ambient light and Sound mood lamp..... 4-130
• Cup holder..... 4-130
• Sliding armrest..... 4-131

Features of your vehicle 4

• Ventilated seat 4-132
• Sun visor 4-132
• Power outlet 4-132
• USB charger 4-134
• Wireless smart phone charging system 4-135
• Coat hook 4-138
• Floor mat anchor(s) 4-138
• Cargo area cover 4-139
• Side curtain 4-140

Exterior features 4-140

• Roof rack 4-140

FEATURES OF YOUR VEHICLE

Keys

Record your key number

The key code number is stamped on the key code tag attached to the key set.

If you lose your keys, Kia recommends to contact an authorized Kia dealer/service partner. Remove the key code tag and sore it in a safe place. Also, record the key code number and keep it in a safe place (not in the vehicle).

⚠ WARNING

Never leave the keys in your vehicle

Leaving children unattended in a vehicle with the keys is dangerous even if the vehicle is ACC or ON position.

Unattended children could place the key in the ignition switch or press the ENGINE START/STOP button and may operate power windows or other controls, or even make the vehicle move, which could result in SERIOUS BODILY INJURY OR EVEN DEATH. Never leave the keys in your vehicle with unsupervised children, when the engine is running.

Battery replacement

The remote key or smart key uses a 3 volt lithium battery which will normally last for several years.

Remote key - Type A

OSP2I049006

Remote key – Type B

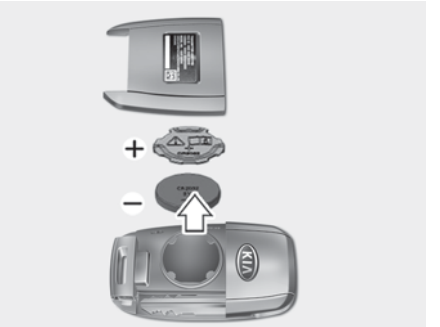

OJA040591

Smart key

OSP2I040441

When replacement is necessary, use the following procedure.

1. Insert a slim tool into the slot and gently pry open the remote key or smart key cover.
2. Using a slim tool, gently pry open the battery cover (for Remote key - Type B).
3. Replace the battery with a new battery (CR2032). When replacing the battery, make sure the battery position.
4. Install the battery in the reverse order of removal.

For remote key or smart key replacement, Kia recommends to visit an authorized Kia dealer/service partner.

⚠ CAUTION

- The remote key or smart key is designed to give you years of trouble-free use, however it can malfunction if exposed to moisture or static electricity. If you are unsure how to use or replace the battery, Kia recommends to contact an authorized Kia dealer/service partner.
- Using the wrong battery can cause the remote key or smart key to malfunction. Be sure to use the correct battery.
- To avoid damaging the remote key or smart key, don't drop it, get it wet, or expose it to heat or sunlight.

⚠ CAUTION

An inappropriately disposed battery can be harmful to the environment and human health.

Dispose the battery according to your local law(s) or regulation.

Remote key

With a remote key, you can lock or unlock the door and tailgate.

OSP2I049003

Lock (1)

All doors are locked if the lock button is pressed while all doors are closed.

The hazard warning lights will blink once to indicate that all doors are locked.

However, if any door, engine hood or tailgate remains open, the hazard warning lights will not operate. If all doors, engine hood and tailgate are closed after the lock button is pressed, the hazard warning lights will blink once.

Unlock (2)

All doors are unlocked if the unlock button is pressed.

The hazard warning lights will blink twice to indicate that all doors are unlocked.

After pressing this button, the doors will lock automatically unless you open any door within 30 seconds.

Tailgate open (3)

If you press this button for longer than a second, the lock will be released or the tailgate will be opened according to the options of the vehicle.

Once the tailgate is opened and then closed, the tailgate will lock automatically.

Start-up

* For more information, refer to "Key positions" on page 6-6.

✻ NOTICE

To prevent damaging the remote key:

- Keep the remote key away from water or any liquid and fire. If the inside of the remote key gets damp (due to drinks or moisture), or is heated, internal circuit may malfunction, excluding the car from the warranty.
- Avoid dropping or throwing the remote key.
- Protect the remote key from extreme temperatures.

⚠ WARNING

Kia recommends to use parts for replacement from an authorized Kia dealer/service partner. If an aftermarket key is used, the ignition switch may not return to ON after START. If this happens, the starter will continue to operate causing damage to the starter motor and possible fire due to excessive current in the wiring.

Mechanical Key

To unfold the key:

- press the release button then the key will unfold automatically.

To fold the key:

- fold the key manually while pressing the release button.

⚠ CAUTION

Do not fold the key without pressing the release button. This may damage the key.

Transmitter precautions

✻ NOTICE

The transmitter will not work if any of the following occurs:

- The ignition key is in the ignition switch.
- You exceed the operating distance limit (about 10 m [30 feet]).
- The battery in the transmitter is weak.
- Other vehicles or objects may be blocking the signal.
- The weather is extremely cold.
- The transmitter is close to a radio transmitter such as a radio station or an airport which can interfere with normal operation of the transmitter.

When the transmitter does not work correctly, open and close the door with the ignition key. If you have a problem with the transmitter Kia recommends to contact an authorized Kia dealer/service partner.

- If the transmitter is in close proximity to your cell phone or smart phone, the signal from the transmitter could be blocked by normal operation of your cell phone or smart phone. This is especially important when the phone is active such as making call, receiving calls, text messaging, and/or sending/receiving emails.

Avoid placing the transmitter and your cell phone or smart phone in the same pants or jacket pocket and maintain adequate distance between the two devices.

Smart key (if equipped)

With a smart key, you can lock or unlock a door and even start the engine without inserting the key.

The functions of buttons on a smart key are similar to the remote key.

Carrying the smart key, you may lock and unlock the vehicle doors (and tailgate). Also, you may start the engine. Refer to the following, for more details.

Locking (1)

Pressing the button of the front driver side door handles with all doors closed and any door unlocked, locks all the doors. If all doors and engine hood are closed, the hazard warning lights will blink once to indicate that all doors are locked.

The button will only operate when the smart key is within 0.7~1 m (28~40 in) from the driver side door handle. If you want to make sure that a door has locked or not, you should check the door lock button inside the vehicle or pull the driver side door handle.

Even though you press the driver side door handle buttons, the doors will not lock and the chime will sound for 3 seconds if any of following occur:

- The smart key is in the vehicle.
- The ENGINE START/STOP button is in the ACC or ON position.
- Any door except the tailgate is open.

Unlocking (2)

Pressing the button of the front driver side door handles with all doors closed and locked, unlocks all the doors. The hazard warning

lights blink twice to indicate that all doors are unlocked.
The button will only operate when the smart key is within 0.7~1 m (28~40 in) from the front driver side door handle.
When the smart key is recognized in the area of 0.7~1 m (28~40 in) from the front driver side door handle, other people can also open the door without possession of the smart key.

After pressing the button, the doors will lock automatically unless you open any door within 30 seconds.

Remote start (3) (if equipped)

You can start the engine and turn on the climate system by pressing the remote start button (3) outside the vehicle.

To start and stop engine remotely :

1. Press the door lock button (1), and then the hazard warning lights blink once to alert you.
2. Press the remote start button (3) for more than 2 seconds to start engine within 4 seconds after pressing the door lock button (1).
3. While remote starting, the hazard warning lights blink. If you want to stop the engine, press the remote start button (3) again.

The climate system will be continuously maintained, as selected when the engine is restarted. If the climate system turned off before you stopped the engine, the climate system does not operate when you start the engine remotely.
If someone without a designated smart key rides your vehicle while remote starting, the engine is automatically stopped for security.

NOTICE

After remotely starting the engine, the engine will turn off automatically after 10 minutes if you do not ride your vehicle.

CAUTION

- The remote start will not work if you exceed the operating distance limit (about 10 m).
- Avoid idling the engine for prolonged periods to obey the emission regulations in your country.
- Laws in your country may restrict the use of remote start. You should check country regulations before using this remote starting system.
- It is only possible to start the engine remotely when the shift lever is in P (Park) position (for Automatic Transmission/Dual Clutch Transmission (DCT)/Intelligent Variable Transmission (IVT)) or N (Neutral) position (for Manual Transmission)
- If the hood or the tailgate is opened, you can't start the engine remotely.

Tailgate open (4)

If you press the button for longer than a second, the lock will be released or the lift gate will be opened according to the options of the vehicle.

Once the tailgate is opened and then closed, the tailgate will lock automatically.

Start-up

You can start the vehicle without inserting the key.

* For more information, refer to "ENGINE START/STOP button" on page 6-10

Mechanical Key

If the smart key does not operate normally, you can lock or unlock the door by using the mechanical key.

OSP21049405

To pull out the mechanical key:

- press and hold the release button and remove the mechanical key.

To reinstall the mechanical key:

- put the key into the hole and push it until a click sound is heard.

Smart key precautions

✻ NOTICE

- If, for some reason, you happen to lose your smart key, you will not be able to start the engine. Tow the vehicle, if necessary, contact a professional workshop. Kia recommends to contact an authorized Kia dealer/service partner.
- A maximum of 2 smart keys can be registered to a single vehicle. If you lose a smart key, Kia recommends to contact an authorized Kia dealer/service partner.
- The smart key will not work if any of the following occurs:
  - The smart key is close to a radio transmitter such as a radio station or an airport which can interfere with normal operation of the smart key.
  - The smart key is near a mobile two-way radio system or a cellular phone.
  - Another vehicle's smart key is being operated close to your vehicle.
    When the smart key does not work properly, open and close the door with the mechanical key. If you have a problem with the smart key, Kia recommends to contact an authorized Kia dealer/service partner.

Immobilizer system

Your vehicle may be equipped with an electronic engine immobilizer system to reduce the risk of unauthorized vehicle use.

Your immobilizer system is comprised of a small transponder in the ignition key and electronic devices inside the vehicle.

Vehicles without smart key system

With the immobilizer system, whenever you insert your ignition key into the ignition switch and turn it to ON, it checks and determines and verifies if the ignition key is valid or not.

If the key is valid, the engine will start.

If the key is invalid, the engine will not start.

To deactivate the immobilizer system:

Insert the ignition key into the key cylinder and turn it to the ON position.

To activate the immobilizer system:

Turn the ignition key to the OFF position. The immobilizer system activates automatically. Without a valid ignition key for your vehicle, the engine will not start.

Vehicles with smart key system

Whenever the ENGINE START/STOP buttons are changed to the ON position, the immobilizer system checks and verifies if the key is valid or not.

If the key is valid, the engine will start.

If the key is invalid, the engine will not start.

To deactivate the immobilizer system

Change the ENGINE START/STOP button to the ON position.

To activate the immobilizer system

Change the ENGINE START/STOP button to the OFF position. The immobilizer system activates automatically. Without a valid smart key for your vehicle, the engine will not start.

⚠ WARNING

In order to prevent theft of your vehicle, do not leave spare keys anywhere in your vehicle. Your Immobilizer password is a customer unique password and should be kept confidential. Do not leave this number anywhere in your vehicle.

✻ NOTICE

When starting the engine, do not use the key with other immobilizer keys around. Otherwise the engine may not start or may stop soon after it starts. Keep each key separately in order to avoid a starting malfunction.

⚠ CAUTION

Do not put metal accessories near the ignition switch. Metal accessories may interrupt the transponder signal and may prevent the engine from being started.

✻ NOTICE

If you need additional keys or lose your keys, Kia recommends to visit an authorized Kia dealer/service partner.

⚠ CAUTION

The transponder in your ignition key is an important part of the immobilizer system. It is designed to give years of trouble- free service, however you should avoid exposure to moisture, static electricity and rough handling. Immobilizer system malfunction could occur.

⚠ CAUTION

Do not change, alter or adjust the immobilizer system because it could cause the immobilizer system to malfunction. In this case, have the system serviced by a professional workshop. Kia recommends to visit an authorized Kia dealer/service partner.

Malfunctions caused by improper alterations, adjustments or modifications to the immobilizer system are not covered by your vehicle manufacturer warranty.

Door lock/unlock sound

When steps out of the car, all doors are closed and lock/unlock the car with remote key or smart key, sound occurs along with flash.

- Door lock beep sound: 1 time
- Door unlock beep sound: 2 times

Disable or enable the door lock/ unlock sound

The driver can disable or enable the door lock/unlock sound using remote key or smart key:

- Default condition: Sound is enabled (ON).
- Disable sound: Press the lock & unlock button for 4 seconds to change from ON to OFF (MUTE).

  Enable sound: Press the lock & unlock button for 4 seconds to change from OFF (MUTE) to ON.
- For a successful Disable/Enable of Sound, Hazard warning lights will blink 4 times.

MT (Manual Transmission) Remote start function (if equipped)

Remote Engine Start allows you to start your vehicle engine remotely from your convenient place by Mobile (UVO Application) or FOB key with Remote Start Button.

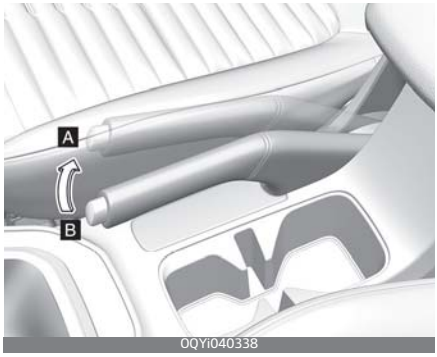

[A]: 5 notches, [B]: 0 notch

The following conditions must be met for a vehicle to start remotely:

- All the vehicle doors including tailgate and bonnet must be closed and locked
- Verify that the parking brake lever should be pulled above 5 notches (Notches can be detected as the "click" sound when parking lever is operated)
- The shift lever must be in 'N' position
- Vehicle must be parked on a flat surface or road
- Smart key must not be placed inside the vehicle

Remote Engine Start will not operate:

- If the shift lever is in other than 'N' position
- If the parking brake lever position is less than 5th notch condition
- If vehicle is parked on a hilly/ inclined road (not flat surface)
- If the vehicle battery is low

⚠ CAUTION

For remote start operation in Manual Transmission, vehicle must be parked on a flat surface.

Theft-alarm system (if equipped)

Theft-alarm system is designed to provide protection from unauthorized entry into the vehicle.

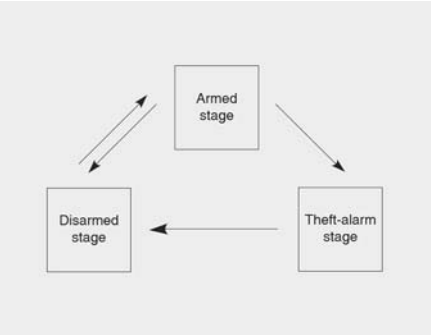

This system is operated in three stages:

- Armed stage
- Theft-alarm stage
- Disarmed stage

If triggered, the system provides an audible alarm with blinking of the hazard warning lights.

Armed stage

Theft Alarm System goes to Armed stage after 30 seconds from the doors are locked by switch on a Outside Door Handle/by a lock button on transmitter.

Using the smart key

Park the vehicle and stop the engine. Arm the system as described below.

1. Turn off the engine.
2. Make sure that all doors (and tailgate) and the engine hood are closed and latched.
3. Do one of the following:
   - Lock the doors by pressing the button of the front outside door handle with the smart key in your possession.
     After completion of the steps above, the hazard warning lights operate once to indicate that the system is armed.
     If any door remains open, the doors won't lock and the chime will sound for 3 seconds. Close the door and try again to lock the doors.
     If tailgate or engine hood remains open, the hazard warning lights won't operate and theft-alarm will not arm. After this, if the tailgate and engine hood are closed, the hazard warning lights will blink once.
   - Lock the doors by pressing the lock button on the smart key.
     After completion of the steps above, the hazard warning lights will operate once to indicate that the system is armed.
     If any door (and tailgate) or engine hood remains open, the hazard warning lights won't operate and theft-alarm will not arm. After this, if all doors (and tailgate) and engine hood

are closed, the hazard warning lights blink once.

Using the transmitter

Park the vehicle and stop the engine. Arm the system as described below.

1. Turn off the engine and remove the ignition key from the ignition switch.
2. Make sure that all doors (and tailgate), the engine hood are closed and latched.
3. Lock the doors by pressing the lock button on the transmitter. After completion of the steps above, the hazard warning lights will blink once to indicate that the system is armed.
   If any door (and tailgate) or engine hood remains open, the hazard warning lights won't operate and theft-alarm will not arm. After this, if all doors (and tailgate) and engine hood are closed, the hazard warning lights blink once.

Theft-alarm stage

The alarm will be activated if any of the following occurs while the system is armed.

- A door is opened without using the transmitter (or smart key).
- The tailgate is opened without using the transmitter (or smart key).
- The engine hood is opened.

The horn will sound and the hazard warning lights will blink continuously for approximately 30 seconds. To turn off the system, unlock the doors with the transmitter (or smart key).

Disarmed stage

The system will be disarmed when:

Transmitter

- The door unlock button is pressed.
- The engine is started.
- The ignition switch is in the "ON" position for 30 seconds or more.

Smart key

- The door unlock button is pressed.
- The button of the front outside door is pressed while carrying the smart key.
- The engine is started.

After the doors are unlocked, the hazard warning lights will blink twice to indicate that the system is dis-armed.

After pressing the unlock button, if any door (or tailgate) is not opened within 30 seconds, the system will be rearmed.

NOTICE

Non-immobilizer system

- Avoid trying to start the engine while the alarm is activated. The vehicle starting motor is disabled during the theft-alarm stage.
  If the system is not disarmed with the transmitter, insert the key into the ignition switch, turn the ignition switch to the ON position and wait for 30 seconds. Then the system will be disarmed.

Door locks

Know how to use the door lock so that you can lock or unlock the door if necessary.

Operating door locks from outside the vehicle (for smart key)

1. Pull out the mechanical key from smart key.
2. Insert the mechanical key into the keyhole outside of driver's door.
3. Turn the key toward the rear of the vehicle to lock and toward the front of the vehicle to unlock.

- Doors can also be locked and unlocked with the transmitter.
- Once the doors are unlocked, they may be opened by pulling the door handle.
- When closing the door, push the door by hand. Make sure the doors are closed securely.

⚠ CAUTION

Be careful not to damage the cover while removing it or misplace it after removing it.

✻ NOTICE

- In cold and wet climates, door lock and door mechanisms may not work properly due to freezing conditions.
- If the door is locked/unlocked multiple times in rapid succession with either the vehicle key or door lock switch, the system may stop operating temporarily in order to protect the circuit and prevent damage to system components.

⚠ WARNING

- If you don't close the door securely, the door may open again.
- Be careful that someone's body and hands are not trapped when closing the door.

⚠ WARNING

If people must spend a longer time in the vehicle while it is very hot or cold outside, there is risk of injuries or danger to life. Do not lock the vehicle from the outside when there are people in it.

⚠ CAUTION

Do not frequently repeat opening and closing of doors, or apply excessive force to a door while the door closer is operating.

Operating door locks from inside the vehicle

You can operate door locks with the door lock button or central door lock switch.

4

With the door lock button

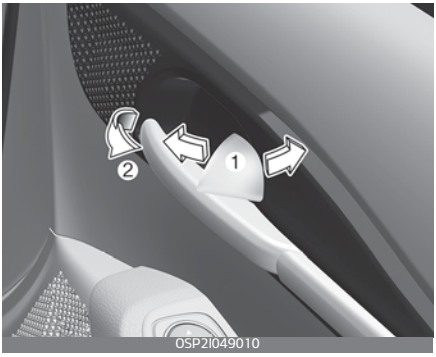

- To unlock a door, push the door lock button (1) to the "Unlock" position.
- To lock a door, push the door lock button (1) to the "Lock" position.
- To open a door, pull the door handle (2) outward.

If the inner door handle of the driver's door is pulled when the door lock button is in the lock position, the button will unlock and the door will open.

Front doors cannot be locked if the ignition key is in the ignition switch and any front door is opened.

Doors cannot be locked if the smart key is in the vehicle and an door is open.

⚠ WARNING

Door lock malfunction

If a power door lock ever fails to function while you are in the vehicle, try one or more of the following techniques to exit:

- Operate the door unlock feature repeatedly (both electronic and manual) while simultaneously pulling on the door handle.
- Operate the other door locks and handles, front and rear.
- Lower a front window and use the key to unlock the door from outside.
- Move to the cargo area and open the tailgate.

⚠ WARNING

Do not pull the inner door handle of driver's (or passenger's) door while the vehicle is moving.

With central door lock switch

Operate by pressing the central door lock switch.

- To lock all vehicle doors, press the left portion (1) for driver side of the switch.
- To unlock all vehicle doors, press the right portion (2) for driver side of the switch.

If the key is in the ignition switch (or if the smart key is in the vehicle) and any door is opened, the doors will not lock even though the left portion (1) for driver side of the central door lock switch is pressed.

⚠ WARNING

Doors

- The doors should always be fully closed and locked while the vehicle is in motion to prevent accidental opening of the door. Locked doors will also discourage potential intruders when the vehicle stops or slows down.
- Be careful when opening doors and watch for vehicles, motorcycles, bicycles or pedestrians approaching the vehicle in the path of the door. Opening a door when something is approaching can cause damage or injury.

⚠ WARNING

Unlocked vehicles

Leaving your vehicle unlocked can invite theft or possible harm to you or others from someone hiding in your vehicle while you are gone. Always remove the ignition key, engage the parking brake, close all windows and lock all doors when leaving your vehicle unattended.

⚠ WARNING

Unattended children

An enclosed vehicle can become extremely hot, causing death or severe injury to unattended children or animals who cannot escape the vehicle. Furthermore, children might operate features of the vehicle that could injure them, or they could encounter other harm, possibly from someone gaining entry to the vehicle. Never leave children or animals unattended in your vehicle.

4

Door lock/unlock features

The vehicle is equipped with door lock/unlock features for the safety and convenience of passengers.

Impact sensing door unlock system

All doors will automatically unlock when an impact causes the air bags to deploy.

Speed sensing door lock system

All doors will automatically lock after the vehicle speed exceeds 15 km/h.

You can activate or deactivate the auto door lock/unlock features in the vehicle. Refer to "User settings mode" on page 4-57.

Child-protector rear door lock

The child safety lock is provided to help prevent children from accidentally opening the rear doors from inside the vehicle.

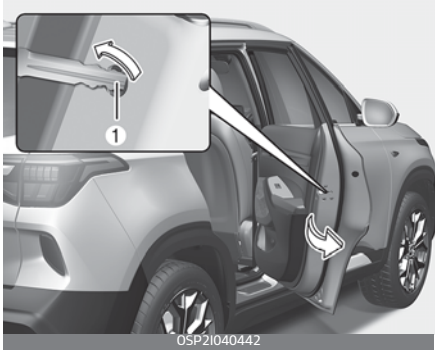

The rear door safety locks should be used whenever children are in the vehicle.

The child safety lock is located on the edge of each rear door. When the child safety lock is in the lock position (1), the rear door will not open if the inner door handle is pulled.

To lock the child safety lock, insert a key (or screwdriver) into the hole and turn it to the lock position.

To allow a rear door to be opened from inside the vehicle, unlock the child safety lock.

⚠ WARNING

Rear door locks

If children accidentally open the rear doors while the vehicle is in motion, they could fall out and be severely injured or killed. To prevent children from opening the rear doors from the inside, the rear door safety locks should be used whenever children are in the vehicle.

Tailgate

⚠ WARNING

Exhaust fumes

If you drive with the tailgate opened, you will draw dangerous exhaust fumes into your vehicle which can cause serious injury or death to vehicle occupants.

If you must drive with the tailgate opened, keep the air vents and all windows open so that additional outside air comes into the vehicle.

⚠ WARNING

Rear cargo area

Occupants should never ride in the rear cargo area where no restraints are available. To avoid injury in the event of an accident or sudden stops, occupants should always be properly restrained.

Opening the tailgate

The tailgate is locked or unlocked when all doors are locked or unlocked with the key, transmitter, smart key or central door lock/ unlock switch.

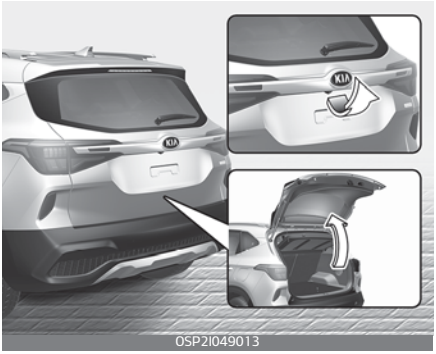

1. To unlock the tailgate only, press the tailgate unlock button on the transmitter or smart key for approximately 1 second.
2. To open the tailgate, press the handle and pull it up.

Once the tailgate is opened and then closed, the tailgate locks automatically. (All doors must be locked.)

✻ NOTICE

In cold and wet climates, door lock and door mechanisms may not work properly due to freezing conditions.

⚠ WARNING

The tailgate swings upward. Make sure no objects or people are near the rear of the vehicle when opening the tailgate.

⚠ CAUTION

Make certain that you close the tailgate before driving your vehicle. Possible damage may occur to the tailgate gas lifters and attaching hardware if the tailgate is not closed prior to driving.

Closing the tailgate

OSP2I049014

1. Lower and push down the tailgate firmly.
2. Make sure that the tailgate is securely latched.

⚠ WARNING

Make sure your hands, feet and other parts of your body are safely out of the way before closing the tailgate.

⚠ CAUTION

Make sure nothing is near the tailgate latch and striker while closing the tailgate. It may damage the tailgate's latch.

Emergency tailgate safety release

Your vehicle is equipped with the emergency tailgate safety release lever located on the bottom of the tailgate.

OSP2I049015

If you have to open the tailgate urgently inside the tailgate due to battery discharge, external handle failure, or other reasons.

The tailgate can be opened by doing as follows:

1. Input the mechanical key into the hole.
2. Push the mechanical key to the right (1).
3. Push up the tailgate.

⚠ WARNING

Do not grasp the part supporting the tailgate (gas lifter), as this may cause serious injury.

Windows

The doors of this vehicle are equipped with power windows that can be operated by a switch.

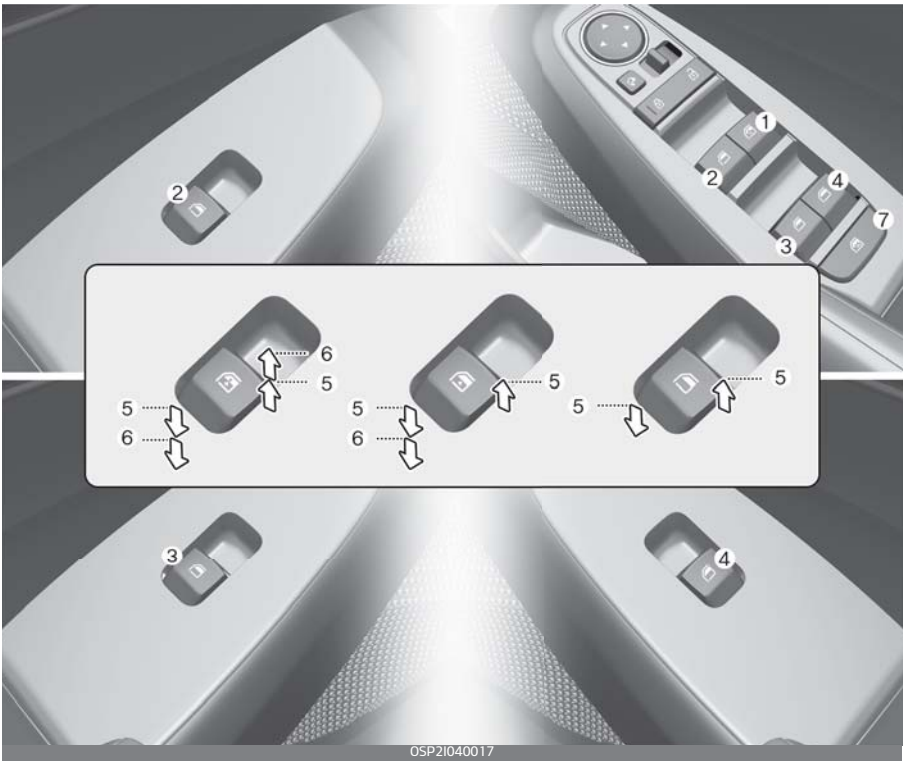

1. Driver's door power window switch
2. Front passenger's door power window switch
3. Rear door (left) power window switch
4. Rear door (right) power window switch
5. Window opening and closing
6. Automatic power window up*/ down*
7. Power window lock switch

*: if equipped

NOTICE

In cold and wet climates, power windows may not work properly due to freezing conditions.

The ignition switch must be in the ON position for power windows to operate.

Each door has a power window switch that controls the door's window. The driver has a power window lock button which can block the operation of rear passenger windows. The power windows can be operated for approximately 10 minutes after the ignition key is removed or turned to the ACC or LOCK position. However, if the front doors are opened, the power windows cannot be operated even within the 10 minutes period.

The driver's door has a master power window switch that controls all the windows in the vehicle.

If the window cannot be closed because it is blocked by objects, remove the objects and close the window.

NOTICE

While driving with the rear windows down or with the sunroof (if equipped) in an open (or partially open position), your vehicle may demonstrate a wind buffeting or pulsation noise. This noise is a normal occurrence and can be reduced or eliminated by taking the following actions. If the noise occurs with one or both of the rear windows down, partially lower both front windows approximately one inch. If you experience the noise with the sunroof open, slightly reduce the size of the sunroof opening.

WARNING

Do not install any accessories in the area of windows. It may impact jam protection.

Window opening and closing

You can open and close windows using the power window switch.

4

Type A

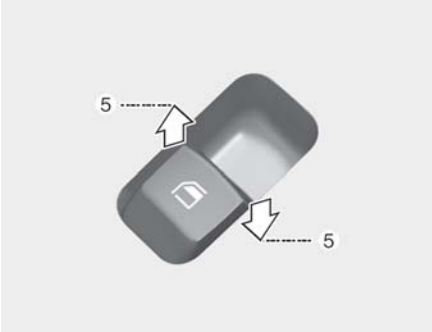

OSP2I049018

To open or close a window, press down or pull up the front portion of the corresponding switch to the first detent position (5).

Type B – Auto down window (if equipped)

OSP2I040019

Pressing the power window switch momentarily to the second detent position (6) completely lowers the window even when the switch is released. To stop the window at the desired position while the window is in operation, pull up the switch briefly to the opposite direction of the window movement.

Type C – Auto up/down window (if equipped)

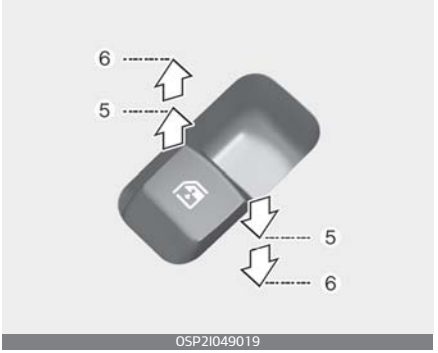

OSP2I049019

Pressing or pulling up the power window switch momentarily to the second detent position (6) completely lowers or raises the window even when the switch is released. To stop the window at the desired position while the window is in operation, pull up or press down and release the switch.

If the power window does not operate normally, the automatic power window system must be reset as follows:

1. Turn the ignition switch to the ON position.
2. Close the window and continue pulling up the power window switch for at least 1 second after the window is completely closed.

Automatic reversal (for Auto up/down window)

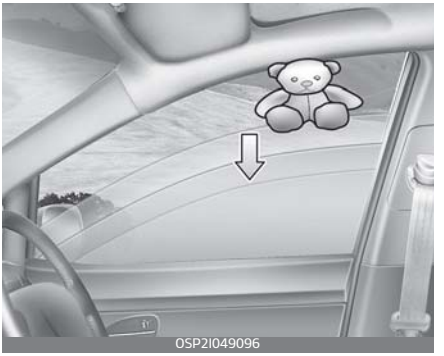
OSP2I049096

If the upward movement of the window is blocked by an object or part of the body, the window will detect the resistance and will stop upward movement. The window will then lower approximately 30 cm

(11.8 in) to allow the object to be cleared.

If the window detects the resistance while the power window switch is pulled up continuously, the window will stop upward movement then lower approximately 2.5 cm (1 in).

And if the power window switch is pulled up continuously again within 5 seconds after the window is lowered by the automatic window reversal feature, the automatic window reversal will not operate.

NOTICE

The automatic reverse feature for the window is only active when the "auto up" feature is used by fully pulling up the switch. The automatic reverse feature will not operate if the window is raised using the half-way position on the power window switch.

WARNING

Always check for obstructions before raising any window to avoid injuries or vehicle damage. If an object less than 4 mm (0.16 in) in diameter is caught between the window glass and the upper window channel, the automatic reverse window may not detect the resistance and will not stop and reverse direction.

WARNING

The automatic reverse feature is not activated while resetting power window system.

Make sure body parts or other objects are safely out of the way before closing the windows to avoid injuries or vehicle damage.

Power window lock button

The driver can disable the power window switches on the rear passengers' doors by pressing the power window lock button to the lock position (pressed).

When the power window lock button is pressed:

- The driver's master control can operate all passengers' power windows.
- The front passenger's control can operate the front passenger's power window.
- The rear passengers' control cannot operate the rear passenger's power window.

⚠ CAUTION

- To prevent possible damage to the power window system, do not open or close two windows or more at the same time. This will also ensure the longevity of the fuse.
- Never try to operate the main switch on the driver's door and the individual door window switch in opposite directions at the same time. If this is done, the window will stop and cannot be opened or closed.

⚠ WARNING

Windows

- NEVER leave the keys in your vehicle with unsupervised children, when the engine is running.
- NEVER leave any child unattended in the vehicle. Even very young children may inadvertently cause the vehicle to move, entangle themselves in the windows, or otherwise injure themselves or others.
- Always double check to make sure all arms, hands, head and other obstructions are safely out of the way before closing a window.
- Do not allow children play with the power windows. Keep the driver's door power window lock button in the LOCK position (pressed). Serious injury can result from unintentional window operation by the child.
- Do not extend heads or any limbs outside the window while the vehicle is in motion.

Hood

The hood serves as a cover for the engine compartment.

Open the hood if maintenance works needs to be performed in the engine compartment or if you need to look at the compartment.

Opening the hood

1. Pull the release lever to unlatch the hood. The hood should pop open slightly.

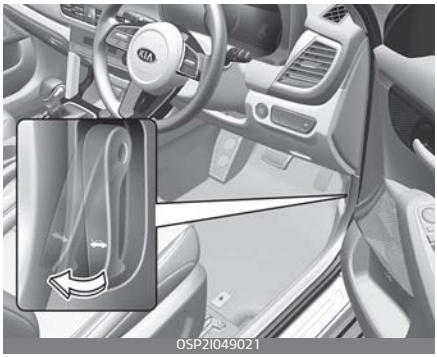
OSP2I049021

⚠ WARNING

Open the hood after turning off the engine on a flat surface, shifting the shift lever to the P (Park) position for Automatic Transmission/Dual Clutch Transmission/Intelligent Variable Transmission and to the 1st (First) gear or R (Reverse) for Manual Transmission, and setting the parking brake.

2. Go to the front of the vehicle, raise the hood slightly, push the secondary latch (1) up side and lift the hood (2).

OSP2I049022

3. Pull out the support rod.

OSP2I049023

4. Hold the hood opened with the support rod.

Hood open warning

The hood warning message will appear on the LCD display when hood is open.

OSP21049103

The warning chime will operate when the vehicle is being driven at or above 3 km/h (2 mph) with the hood open.

Closing the hood

1. Before closing the hood, check the following:
   - All filler caps in the engine compartment must be correctly installed.
   - Gloves, rags or any other combustible material must be removed from the engine compartment.
2. Lower the hood until it is about 30 cm above the closed position and let it drop. Make sure that it locks into place.
3. Check that the hood has engaged properly.
   - If the hood can be raise slightly, it is not properly engaged.
   - Open it again and close it with a little more force.

⚠ WARNING

- Before closing the hood, ensure that all obstructions are removed from the hood opening. Closing the hood with an obstruction present in the hood opening may result in property damage or severe personal injury.
- Do not leave gloves, rags or any other combustible material in the engine compartment. Doing so may cause a heat-induced fire.

⚠ WARNING

- Always double check to be sure that the hood is firmly latched before driving away. If it is not latched, the hood could open while the vehicle is being driven, causing total loss of visibility, which might result in an accident.
- Do not move the vehicle with the hood raised. The view will be blocked and the hood could fall or be damaged.

Fuel filler door

The vehicle's fuel filler door must be opened and closed by hand from outside the vehicle.

Opening the fuel filler door

The fuel filler door must be opened from inside the vehicle by pulling up on the fuel filler door opener located on the front floor area on the driver's seat.

NOTICE

If the fuel filler door does not open because ice has formed around it, tap lightly or push on the door to break the ice and release the door. Do not pry on the door. If necessary, spray around the door with an approved de-icer fluid (do not use radiator anti-freeze) or move the vehicle to a warm place and allow the ice to melt.

WARNING

Before refueling, be sure to check what type of fuel is used for your vehicle.

If you put diesel fuel into a gasoline (petrol)-powered vehicle or gasoline (petrol) into a diesel-powered vehicle, it may affect the fuel system and cause serious damage to the vehicle.

1. Stop the engine.
2. To open the fuel filler door, pull up the fuel filler door opener.

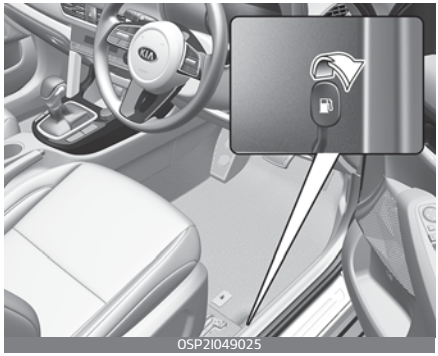

3. Pull open the fuel filler door (1).

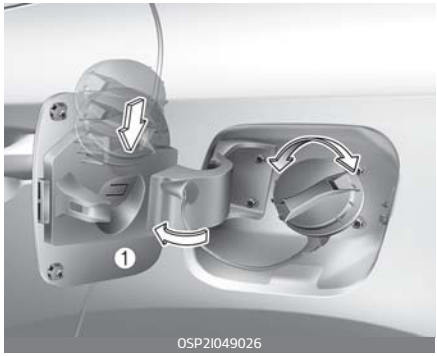

4. To remove the cap, turn the fuel filler cap counterclockwise.
5. Refuel as needed.

Closing the fuel filler door

1. To install the cap, turn it clockwise until it "clicks". This indicates that the cap is securely tightened.
2. Close the fuel filler door and push it lightly and make sure that it is securely closed.

⚠ WARNING

Refueling

- If pressurized fuel sprays out, it can cover your clothes or skin and thus subject you to the risk of fire and burns. Always remove the fuel cap carefully and slowly. If the cap is venting fuel or if you hear a hissing sound, wait until the condition stops before completely removing the cap.
- Do not "top off" after the nozzle automatically shuts off when refueling.
- Always check that the fuel cap is installed securely to prevent fuel spillage in the event of an accident.

⚠ WARNING

Refueling dangers

Automotive fuels are flammable materials. When refueling, please note the following guidelines carefully. Failure to follow these guidelines may result in severe personal injury, severe burns or death by fire or explosion.

- Read and follow all warnings at the gas station facility.
- Before refueling note the location of the Emergency Gasoline (Petrol) Shut-Off, if available, at the gas station facility.
- Before touching the fuel nozzle, you should eliminate potentially dangerous static electricity discharge by touching another metal part of the vehicle, a safe distance away from the fuel filler neck, nozzle, or other gas source.
- Do not get back into a vehicle once you have begun refueling since you can generate static electricity by touching, rubbing or sliding against any item or fabric (polyester, satin, nylon, etc.) capable of producing static electricity. Static electricity discharge can ignite fuel vapors resulting in rapid burning. If you must re-enter the vehicle, you should once again eliminate potentially dangerous static electricity discharge by touching a metal part of the vehicle, away from the fuel filler neck, nozzle or other gasoline (petrol) source.
- When using an approved portable fuel container, be sure to place the container on the ground prior to refueling. Static electricity discharge from the container can ignite fuel vapors causing a fire. Once refueling has begun, contact

with the vehicle should be maintained until the filling is complete. Use only approved portable plastic fuel containers designed to carry and store gasoline (petrol).

- Do not use cellular phones while refueling. Electric current and/or electronic interference from cellular phones can potentially ignite fuel vapors causing a fire.
- When refueling, always shut the engine off. Sparks produced by electrical components related to the engine can ignite fuel vapors causing a fire. Once refueling is complete, check to make sure the filler cap and filler door are securely closed, before starting the engine.
- DO NOT use matches or a lighter and DO NOT SMOKE or leave a lit cigarette in your vehicle while at a gas station especially during refueling. Automotive fuel is highly flammable and can, when ignited, result in fire.
- If a fire breaks out during refueling, leave the vicinity of the vehicle, and immediately contact the manager of the gas station and then contact the local fire department. Follow any safety instructions they provide.

⚠ CAUTION

- Make sure to refuel your vehicle according to the "Fuel requirements" on page 1-2.
- If the fuel filler cap requires replacement, please make sure that you use parts designed for replacement in your vehicle. An incorrect fuel filler cap can result in a serious malfunction of the fuel system or emission control system. For more detailed information, we recommend that you contact an authorized Kia dealer/service partner.
- Do not spill fuel on the exterior surfaces of the vehicle. Any type of fuel spilled on painted surfaces may damage the paint.
- After refueling, make sure the fuel cap is installed securely to prevent fuel spillage in the event of an accident.

Sunroof (if equipped)

If your vehicle is equipped with a sunroof, you can slide or tilt your sunroof with the sunroof control lever located on the overhead con-sole.

The sunroof can be operated for approximately 10 minutes after the ENGINE START/STOP button is turned to the ACC or LOCK position. However, if the front doors are opened, the sunroof cannot be opened even within the 10 minutes period.

NOTICE

- In cold and wet climates, the sun-roof may not work properly due to freezing conditions.
- After a vehicle is washed or in a rainstorm be sure to wipe off any water that is on the sunroof before operating it.

CAUTION

- Do not continue to move the sun-roof control lever after the sun-roof is fully opened, closed, or tilted. Damage to the motor or system components could occur.
- Make sure the sunroof is closed fully when leaving your vehicle. If the sunroof is open, rain or snow may leak through the sun-roof and wet the interior as well as cause theft.

NOTICE

The sunroof cannot slide when it is in the tilt position nor can it be tilted while in an open or slide position.

WARNING

Never adjust the sunroof or sun-shade while driving. This could result in loss of control and an accident that may cause death, serious injury, or property damage.

WARNING

- In order to prevent accidental operation of the sunroof, espe-cially by a child, do not let a child operate the sunroof.
- Do not sit on the top of the vehi-cle. It may cause vehicle damage.

Sliding the sunroof

To open the sunroof, push the sun-roof control lever backward.

To close the sunroof, push the sun-roof control lever forward.

To open the sunroof automatically:

Pull the sunroof control lever back-ward to the second detent position and then release it. The sunroof will slide to the recommended open position (about 5 cm before the maximum slide open position).

To stop the sunroof sliding at any point, push the sunroof control lever momentarily.

To close the sunroof automatically:

Push the sunroof control lever for-ward to the second detent position and then release it. The sunroof will automatically close all the way.

To stop the sunroof sliding at any point, push the sunroof control lever momentarily.

✻ NOTICE

To reduce wind noise while driving, it is recommended that you drive with the sunroof slightly closed (stop the sunroof about 5 cm (2 in) before the maximum slide open position).

⚠ WARNING

Make sure heads, other body parts or other objects are safely out of the way before closing the window to avoid injuries or vehicle damage.

Objects less than 4 mm (0.16 inch) in diameter caught between the sunroof glass and the front window channel may not be detected by the automatic reverse window and the window will not stop and reverse direction.

Automatic reversal

If an object or part of the body is detected while the sunroof is closing

automatically, it will reverse the direction, and then stop.

The auto reverse function does not work if a tiny obstacle is between the sliding glass and the sunroof sash. You should always check that all passengers and objects are away from the sunroof before closing it.

⚠ WARNING

- Never try pinching any part of your body intentionally to activate the Automatic reversal function.
- The Automatic reversal function may not work if something gets caught just before the sunroof fully closes.

Tilting the sunroof

To open the sunroof, push the sunroof control lever upward until the sunroof moves to the desired position.

To close the sunroof, push the sunroof lever forward until the sunroof moves to the desired position.

⚠ WARNING

- Make sure heads, other body parts or other objects are safely out of the way before closing the sunroof to avoid injuries or vehicle damage.
- Never adjust the sunroof or sunshade while driving. This may cause loss of vehicle control resulting in an accident.
- To avoid serious injury or death, do not extend your head, arms or body outside the sunroof while driving.

⚠ CAUTION

- Periodically remove any dirt that may accumulate on the guide rail.
- If you try to open the sunroof when the temperature is below freezing or when the sunroof is covered with snow or ice, the glass or the motor could be damaged.
- While using sunroof for a long time, a dust between sunroof and roof panel can make a noise. Open the sunroof and remove regularly the dust using clean cloth.

- The sunroof is made to slide together with sunshade. Do not leave the sunshade closed while the sunroof is open.

Sunshade

The sunshade will be opened with the glass panel automatically when the glass panel is slid.

You will have to close it manually if you want it closed.

Resetting the sunroof

Reset the sunroof when:

- Battery is discharged or disconnected or the related fuse has been replaced or disconnected.
- The one-touch sliding function of the sunroof does not normally operate.

Reset the sunroof as described below.

1. The ignition switch must be in the ON position.
2. Close the sunroof completely.
3. Release the control lever.
4. Push the control lever forward until the sunroof tilts and slightly moves up. Then, release lever.
5. Push the control lever forward until the sunroof is operated as follows:
   1) SLIDE OPEN → SLIDE CLOSE
   2) Then, release the control lever.

Sunroof open warning (if equipped)

If the driver removes the ignition key (smart key: turns off the engine) and opens the driver-side door when the sunroof is not fully closed, the warning chime will sound for a few seconds and a warning image will appear on the LCD display.

Close the sunroof securely when leaving your vehicle.

Steering wheel

The steering wheel of this vehicle is equipped with the Electric Power Steering (EPS) system.

Electric power steering (EPS)

Power steering uses the motor to assist you in steering the vehicle.

If the engine is off or if the power steering system becomes inoperative, the vehicle may still be steered, but it will require increased steering effort.

The EPS is controlled by the power steering control unit which senses the steering wheel torque and vehicle speed to command the motor.

The steering effort becomes heavier as the vehicle's speed increases and becomes lighter as the vehicle's speed decreases for better control of the steering wheel.

Should you notice any change in the effort required to steer during normal vehicle operation, have the system checked by a professional workshop. Kia recommends to visit an authorized Kia dealer/service partner.

✻ NOTICE

The following symptoms may occur during normal vehicle operation:

- The EPS warning light does not illuminate.
- The steering effort is high immediately after turning the ignition switch on. This happens as the EPS system performs the diagnostics. When the diagnostics is completed, the steering effort will return to its normal condition.
- A click noise may be heard from the EPS relay after the ignition switch is turned to the ON or LOCK position.
- Motor noise may be heard when the vehicle is at a stop or at a low driving speed.
- When the abnormality is detected in the electric power steering system, a deadly accident prevention purposes, steering assist functions will be stopped. At this time, the instrument panel warning light turns on or blinks and the power to manipulate the steering will be off. Please check immediately after moving the vehicle to a safe zone.
- The steering effort increases if the steering wheel is rotated continuously when the vehicle is not in motion. However, after a few minutes, it will return to its normal conditions.

- If the Electric Power Steering System does not operate normally, the warning light will illuminate on the instrument cluster. The steering wheel may become difficult to control or operate abnormally. In this case, have the system inspected by a professional workshop. Kia recommends to visit an authorized Kia dealer/service partner.
- When you operate the steering wheel in low temperature, abnormal noise could occur. If temperature rises, the noise will disappear. This is a normal condition.

Tilt & telescopic steering wheel

A tilt and telescopic steering wheel allows you to adjust the steering wheel before you drive. You can also raise it to give your legs more room when you exit and enter the vehicle.

The steering wheel should be positioned so that it is comfortable for you to drive, while permitting you to see the instrument panel warning lights and gauges.

⚠ WARNING

- Never adjust the angle of the steering wheel while driving. You may lose steering control and cause severe personal injury, death or accidents.
- After adjusting, push the steering wheel both up and down to be certain it is locked in position.

Adjusting steering wheel angle and height

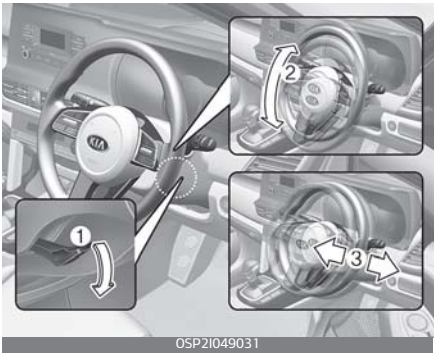

OSP2I049031

1. To change the steering wheel angle, pull down the lock release lever (1).
2. Adjust the steering wheel to the desired angle (2) and height (3, if equipped).
3. Pull up the lock-release lever to lock the steering wheel in place.
4. Be sure to adjust the steering wheel to the desired position before driving.

NOTICE

After adjustment, sometimes the lock-release lever may not lock the steering wheel.

It is not a malfunction. This occurs when two gears engage. In this case, adjust the steering wheel again and then lock the steering wheel.

Horn

To sound the horn, press the area indicated by the horn symbol on your steering wheel (see illustration).

OSP2I049032

The horn will operate only when this area is pressed. Check the horn regularly to be sure it operates properly.

CAUTION

- Do not strike the horn severely to operate it, or hit it with your fist. Do not press on the horn with a sharp-pointed object.
- When cleaning the steering wheel, do not use an organic solvent such as thinner, benzene, alcohole and gasoline (petrol). Doing so may damage the steering wheel.

Mirrors

This vehicle is equipped with inside and outside rearview mirrors to provide views of objects behind the vehicle.

Inside rearview mirror

Adjust the rearview mirror so that the center view through the rear window is seen.

Make this adjustment before you start driving.

⚠ WARNING

Rear visibility

Do not place objects in the rear seat or cargo area which would interfere with your vision out the rear window.

⚠ WARNING

Do not adjust the rearview mirror while the vehicle is moving. This could result in loss of control, and an accident which could cause death, serious injury or property damage.

⚠ WARNING

Do not modify the inside mirror and don't install a wide mirror. It could result in injury, during an accident or deployment of the air bag.

Day/night rearview mirror (if equipped)

(1): Day, (2): Night

Make this adjustment before you start driving and while the day/night lever is in the day position (1).

Pull the day/night lever toward you (2) to reduce the glare from the headlights of the vehicles behind you during night driving.

Remember that you lose some rearview clarity in the night position.

Electric Chromic Mirror (ECM) with UVO *service (if equipped)*

The electric rearview mirror automatically controls the glare from the headlights of the vehicles behind you in nighttime or low light driving conditions.

OSP21049034

1. SOS Button
2. Roadside assist button
3. Virtual assist button (UVO)

The sensor (4) mounted in the mirror senses the light level around the vehicle, and automatically controls the headlight glare from the vehicles behind you.

When the engine is running, the glare is automatically controlled by the sensor mounted in the rearview mirror.

Telematics buttons are also located on the mirror.

Outside rearview mirror

Your vehicle is equipped with both left-hand and right-hand outside rearview mirrors.

Be sure to adjust the mirror angles before driving.

The mirrors can be adjusted remotely with the control levers or remote switch, depending on the type of mirror control installed. The mirror heads can be folded back to prevent damage during an automatic car wash or when passing through a narrow street.

⚠ WARNING

Rearview mirrors

- The outside rearview mirror is convex. Objects seen in the mirror are closer than they appear.
- Use your interior rearview mirror or direct observation to determine the actual distance of following vehicles when changing lanes.

⚠ CAUTION

Do not scrape ice off the mirror face; this may damage the surface of the glass. If ice should restrict the movement of the mirror, do not force the mirror for adjustment. To remove ice, use a deicer spray, or a sponge or soft cloth with warm water.

⚠ CAUTION

If the mirror is jammed with ice, do not adjust the mirror by force. Use an approved spray de-icer (not radiator antifreeze) to release the frozen mechanism or move the vehicle to a warm place and allow the ice to melt.

⚠ WARNING

Do not adjust or fold the outside rearview mirrors while the vehicle is moving. This could result in loss of control, and an accident which could cause death, serious injury or property damage.

Adjusting the outside rearview mirrors

Manual type (if equipped)

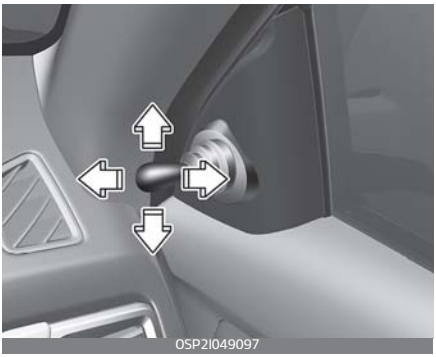

To adjust an outside mirror, move the control lever located at the forward inside area of the window frame.

Electric type (if equipped)

The electric remote control mirror switch allows you to adjust the position of the left and right outside rearview mirrors.

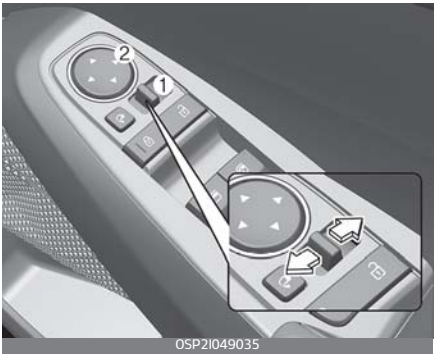

Adjusting the rearview mirrors:

1. Move the R or L switch (1) to select the right side mirror or the left side mirror.
2. Press a corresponding point (▲) on the mirror adjustment control (2) to position the selected mirror up, down, left or right.

⚠ CAUTION

- The mirrors stop moving when they reach the maximum adjusting angles, but the motor continues to operate while the switch is pressed. Do not press the switch longer than necessary, the motor may be damaged.
- Do not attempt to adjust the outside rearview mirror by hand. Doing so may damage the parts.

Folding the outside rearview mirror

Manual type (if equipped)

OSP2I049036

To fold the outside rearview mirror:

- Grasp the housing of the mirror and then fold it toward the rear of the vehicle.

Electric type (if equipped)

The outside rearview mirror can be folded or unfolded by pressing the switch when the ignition switch or ENGINE START/STOP button is in the ON position as below.

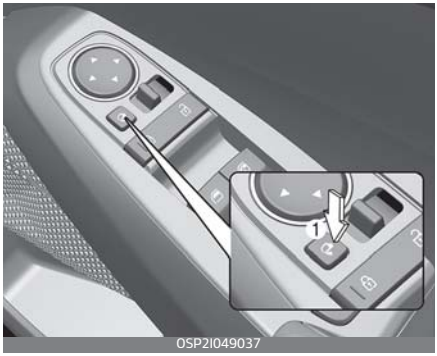

OSP2I049037

- To fold the outside rearview mirror depress the button (1).
- To unfold it, depress the button (1) again.

⚠ CAUTION

The electric type outside rearview mirror operates even though the ignition switch or ENGINE START/ STOP button is in the LOCK or OFF position. However, to prevent unnecessary battery discharge, do not adjust the mirrors longer than necessary while the engine is not running.

⚠ CAUTION

In case it is an electric type outside rearview mirror, don't fold it by hand. It could cause motor failure.

Instrument cluster

Type A

OSP2I049100

Type B

OSP2I049101

* The actual cluster in the vehicle may differ from the illustration.

1. Tachometer
2. Speedometer
3. Engine coolant temperature gauge
4. Fuel gauge
5. Warning and indicator lights
6. LCD display

Adjusting instrument cluster illumination (if equipped)

The brightness of the instrument panel illumination is changed by pressing the illumination control button ("+" or "–") when the ignition switch or ENGINE START/STOP button is ON, or the tail lights are turned on.

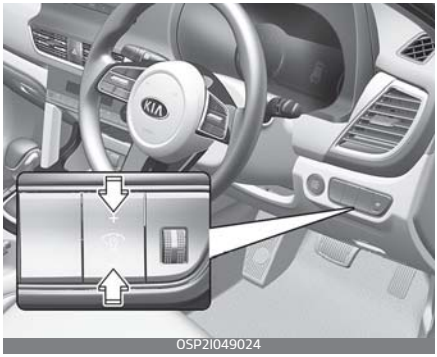

OSP2I049024

⚠ WARNING

Never adjust the instrument cluster while driving. This could result in loss of control and lead to an accident that may cause death, serious injury, or property damage.

- If you hold the illumination control button ("+" or "–"), the brightness will be changed continuously.

OSP2I049105

- If the brightness reaches to the maximum or minimum level, an alarm will sound.

Gauges

The gauges display various information such as the speed of the vehicle, and so on.

Speedometer

OSP2I049106

The speedometer indicates the speed of the vehicle and is cali-

brated in kilometers per hour (km/h).

Tachometer

OSP21049107

The tachometer indicates the approximate number of engine revolutions per minute (rpm).

Use the tachometer to select the correct shift points and to prevent lugging and/or over-revving the engine.

⚠ CAUTION

Do not operate the engine within the tachometer's RED ZONE. This may cause severe engine damage.

Engine coolant temperature gauge

OSP21049130

This gauge indicates the temperature of the engine coolant when the ignition switch or ENGINE START/STOP button is ON.

⚠ CAUTION

If the gauge pointer moves beyond the normal range area toward the "H" position, it indicates overheating that may damage the engine.

Do not continue driving with an overheated engine. If your vehicle overheats, refer to "If the engine overheats" on page 7-9.

⚠ WARNING

Never remove the radiator cap when the engine is hot. The engine coolant is under pressure and could severely burn. Wait until the engine is cool before adding coolant to the reservoir.

Fuel gauge

OSP2I049108

This gauge indicates the approximate amount of fuel remaining in the fuel tank.

NOTICE

- The fuel tank capacity is given in "Recommended lubricants and capacities" on page 9-7.
- The fuel gauge is supplemented by a low fuel warning light, which will illuminate when the fuel tank is nearly empty.
- On inclines or curves, the fuel gauge pointer may fluctuate or the low fuel warning light may come on earlier than usual due to the movement of fuel in the tank.

WARNING

Fuel Gauge

Running out of fuel can expose vehicle occupants to danger.

You must stop and obtain additional fuel as soon as possible after the warning light comes on or when the gauge indicator comes close to the " E" level.

CAUTION

Avoid driving with a extremely low fuel level. Running out of fuel could cause the engine to misfire damaging the catalytic converter.

Odometer

OSP2I049109

The odometer Indicates the total distance that the vehicle has been driven and should be used to determine when periodic maintenance should be performed.

- Odometer range: 0 ~ 1,599,999 km or 999,999 miles.

Outside temperature gauge

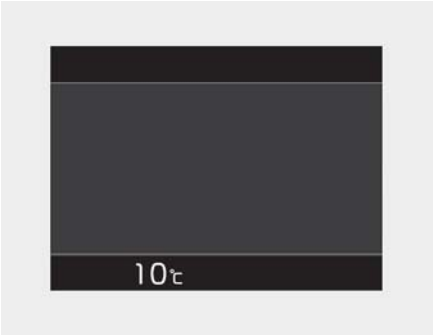

OSP2I049110

This gauge indicates the current outside air temperatures by 1 °C (1 °F).

- Temperature range: -40 °C ~ 85 °C (-40 °F ~ 211 °F)

The outside temperature on the display may not change immediately like a general thermometer to prevent the driver from being inattentive.

To change the temperature unit (from °C to °F or from °F to °C)

The temperature unit can be changed by using the "User Settings" mode of the LCD Display.

* For more details, refer to "LCD display" on page 4-54.

Transmission shift indicator

Transmission shift indicator displays gear information depending on your vehicle's transmission type.

Automatic transmission/intelligent variable transmission shift indicator (if equipped)

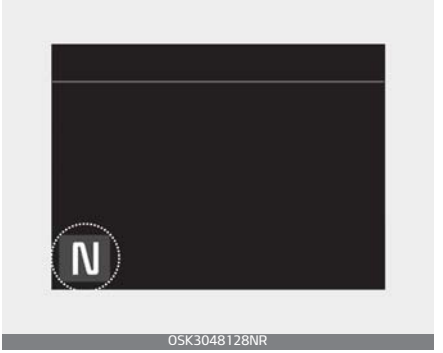

OSK3048128NR

This indicator displays which automatic transmission shift lever is selected.

- Park: P
- Reverse: R
- Neutral: N
- Drive: D
- Sports Mode: 1, 2, 3, 4, 5, 6

Manual transmission shift indicator (if equipped)

OSK3048129NR

This indicator informs which gear is desired while driving to save fuel.

- Shifting up: ▲2, ▲3, ▲4, ▲5, ▲6
- Shifting down: ▼1, ▼2, ▼3, ▼4, ▼5

For example

▲3: Indicates that shifting up to the 3rd gear is desired (currently the shift lever is in the 2nd or 1st gear).

▼4: Indicates that shifting down to the 4th gear is desired (currently the shift lever is in the 5th or 6th gear).

When the system is not working properly, the indicator is not displayed.

Dual clutch transmission shift indicator (if equipped)

OSK3048161NR

This indicator displays which shift lever is selected.

- Park: P
- Reverse: R
- Neutral: N
- Drive: D1, D2, D3, D4, D5, D6, D7
- Sports mode: S1, S2, S3, S4, S5, S6, S7

LCD display

The LCD display modes can be changed by using the control buttons.

LCD Display Control

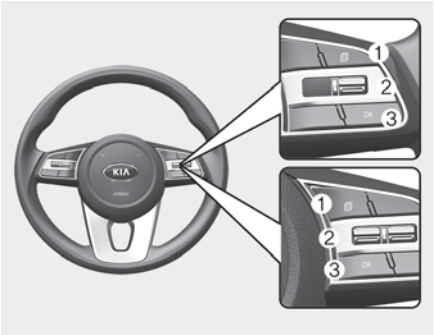

OSP2I049060

1. : MODE button for changing modes
2. ∧ /∨: MOVE switch for changing items
3. OK: SELECT/RESET button for setting or resetting the selected item

LCD display modes

The LCD display provides 5 modes. You can switch modes by pressing the Mode button.

	Mode				
	Trip Computer	Turn By Turn (TBT)*	Informa-tion*	User Settings	Master warning
Up/Down	Fuel Economy	Route Guid-ance	TPMS	Head-up display	The Master Warning mode displays warning messages related to the vehicle when one or more systems is not operating normally.
	Accumulated Info	Destination Info		Driver Assistance	
	Drive Info			Door	
				Lights	
	Digital Speedom-eter			Convenience	
				Service Interval	
				Other features	
				Language	
				Reset	

The information provided may differ depending on which functions are applicable to your vehicle.

* : if equipped

Trip computer mode

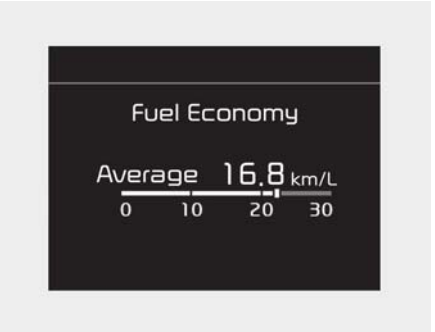

OSP2I049111

The trip computer mode displays information related to vehicle driving parameters including fuel economy, tripmeter information and vehicle speed.

* For more details, refer to "Trip information (trip computer)" on page 4-62.

Turn By Turn (TBT) mode

OSP2I049112

This mode displays the state of the navigation.

Information mode

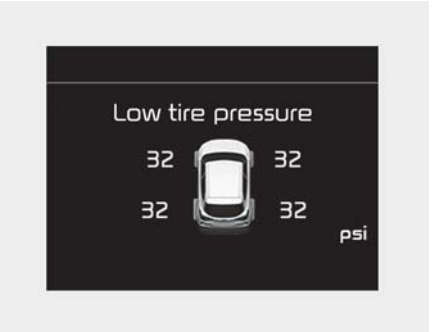

OSP2I049129

This mode displays the state of:

- Tire pressure

* For more details, refer to each system information in "Driving your vehicle" on page 6-3.

Tire pressure status

* For more details, refer to "Tire Pressure Monitoring System (TPMS) (if equipped)" on page 7-10.

Master warning mode

This warning light informs the driver the following situations.

- LED headlamp malfunction (if equipped)
- Lamp malfunction

At this time, a Master Warning icon (⚠) will appear beside the User Settings icon (⚙), on the LCD display. If the warning situation is solved, the master warning light will

be turned off and the Master Warning icon will disappear.

User settings mode

OSK3048119NR

In this mode, you can change the settings of the instrument cluster, doors, lamps, etc.

1. Head-up display
2. Driver Assistance
3. Door
4. Lights
5. Sound
6. Convenience
7. Service Interval
8. Other features
9. Language
10. Reset

The information provided may differ depending on which functions are applicable to your vehicle.

Shift to P to edit settings/Engage parking brake to edit settings

OSK3048140NR

This warning message appears if you try to adjust the User Settings while driving.

- Automatic Transmission/Dual Clutch Transmission/Intelligent Variable Transmission

For your safety, change the User Settings after parking the vehicle, applying the parking brake and moving the shift lever to P (Park).

- Manual Transmission

For your safety, change the User Settings after engaging the parking brake.

1. Head-Up Display (if equipped)

Items	Explanation
Display Height	Adjust the height (1~20) of the HUD image on the HUD screen.
Rotation	Adjust the degree (-5~+5) of the HUD rotation.
Brightness	Adjust the intensity (1~20) of the HUD brightness.
Speed Size	Small/Medium/Large
Speed Color	White/Orange/Green

2. Driver Assistance (if equipped)

Items	Explanation
Warning Volume	• High/Medium/Low To select the Warning volume
Blind-Spot Safety	• Blind-Spot View To select the functions.

* The information provided may differ depending on which functions are applicable to your vehicle.

3. Door

Items	Explanation
Auto Lock	• Off: The auto door unlock operation will be canceled. • Enable on speed: All doors will be automatically locked when the vehicle speed exceeds 15 km/h (9.3 mph) • Enable on shift(if equipped with Automatic transmission/Dual clutch transmission/Intelligent variable transmission): All doors will be automatically locked if the vehicle is shifted from the P (Park) position to the R (Reverse), N (Neutral), or D (Drive) position(with the Engine ON, it is activated).
Auto Unlock	• Off: The auto door unlock operation will be canceled. • Vehicle Off/On key out (if equipped): All doors will be automatically unlocked when the ignition key is removed from the ignition switch or the ENGINE START/STOP button is set to the OFF position. • On shift to P(if equipped with Automatic transmission/Dual clutch transmission/Intelligent variable transmission): All doors will be automatically unlocked if the gear is shifted to the P (Park) posi¯tion(with the Engine ON, it is activated).

* The information provided may differ depending on which functions are applicable to your vehicle.

4. Lights

Items	Explanation
One Touch Turn Indicator	• Off: The one touch turn signal function will be deactivated. • 3, 5, 7 flashes: The turn signal indicator will blink 3, 5, or 7 times when the turn signal lever is moved slightly. * For more details, refer to "Lighting" on page 4-94.
Head Lamp Delay	If this item is checked, the head lamp delay function will be activated.

* The information provided may differ depending on which functions are applicable to your vehicle.

5. Convenience

Items	Explanation
Welcome Mirror	• On door unlock / On driver approach To select the welcome mirror function.
Wireless Charging System	• If this item is checked, the wireless charging function will be activated.
Wiper/Lights Display	• If this item is checked, the wiper/lights display will be activated.
Gear Position Pop-up	• If this item is checked, gear position pops up on the lower left corner of the LCD on changing the gear.

* The information provided may differ depending on which functions are applicable to your vehicle.

6. Service interval

Items	Explanation
Enable Service Interval	If this item is checked, the Service Interval function will be activated.
Adjust Interval	If the service interval menu is activated, you may adjust the time and distance.
Reset	To reset the service interval function.

If the service interval is activated and the time and distance is adjusted, messages are displayed in the following situations each time the vehicle is turned on.

- Service in: Displayed to inform the driver the remaining mileage and days to service.
- Service required: Displayed when the mileage and days to service has been reached or passed.

If any of the following conditions occur, the mileage and number of days to service may be incorrect.

- The battery cable is disconnected.
- The battery is discharged.

7. Other features

Items	Explanation
Fuel Economy Auto Reset	• Off: The average fuel economy will not reset. • After ignition / After refueling: The average fuel economy will reset automatically after ignition/refueling.
Speedometer Unit	• km/h or mph To select the Speedometer unit.
Fuel Economy Unit	• Km/L, L/100Km To select the Fuel economy unit. For more details, refer to "Trip information (trip computer)" on page 4-62.
Temperature Unit	• °C/°F To select the Temperature unit.
Torque Unit	• N·m, lbf·ft To select the Torque Unit

Items	Explanation
Turbo Boost Pressure Unit	• psi, kPa, bar To select the Turbo Boost Pressure Unit
Tire Pressure Unit	• psi, kPa, bar To select the Tire Pressure Unit

* The information provided may differ depending on which functions are applicable to your vehicle.

8. Reset

Items	Explanation
Reset	You can reset the menus in the User Settings mode. All menus in the User Settings mode are reset to factory settings, except language and service interval.

9. Language

Items	Explanation
Language	To select language.

Trip information (trip computer)

The trip computer is a microcom- puter- controlled driver information system that displays information related to driving.

✻ NOTICE

Some driving information stored in the trip computer resets if the bat- tery is disconnected.

Trip Modes

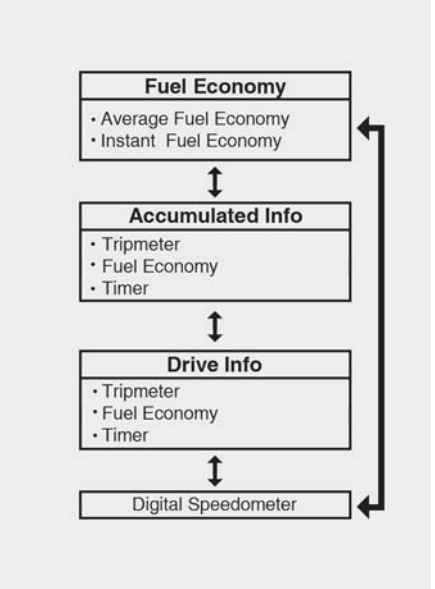

ODL3049472L

To change the trip mode, scroll the toggle the switch (∧ / ∨) on the steering wheel.

Fuel economy

Average Fuel Economy (1)

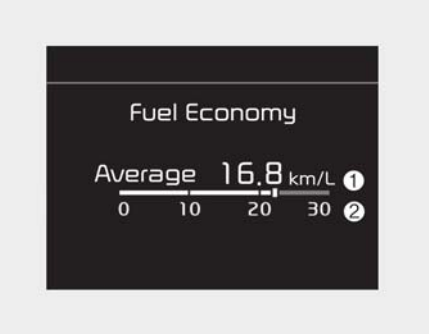

OSP2I049115

- The average fuel economy is cal- culated by the total driving dis- tance and fuel consumption since the last average fuel economy reset.
  - Fuel economy range: 0~99.9 km/L, L/100 km or mpg
- The average fuel economy can be reset both manually and auto- matically.

Manual reset

To clear the average fuel economy manually, press the OK button on the steering wheel for more than 1 second when the average fuel econ- omy is displayed.

Automatic reset

To make the average fuel economy be reset automatically whenever refueling, select the "Fuel economy auto reset" mode in User Setting

menu of the LCD Windows (Refer to "User settings mode" on page 4-57).

- OFF – You may set to default manually by using the trip switch reset button.
- After ignition – The vehicle will automatically set to default once 4 hours pass after the Ignition is in OFF.
- After refueling – After refueling more than 6 liters and driving over 1 km/h, the vehicle will reset to default automatically.

NOTICE

The average fuel economy is not displayed for more accurate calculation if the vehicle does not drive more than 10 seconds or 50 meters (0.03 miles) since the ignition switch or ENGINE START/STOP button is turned to ON.

Instant Fuel Economy (2)

- This mode displays the instant fuel economy during the last few seconds when the vehicle speed is more than 10 km/h (6.2 mph).
  - Fuel economy range: 0.0~30 km/L, L/100 km or 0.0 ~ 50.0 mpg

Accumulated driving information mode

This display shows the accumulated trip distance (1), the average fuel efficiency (2), and the total driving time (3).

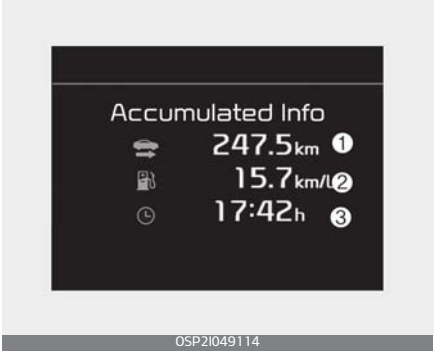

OSP2I049114

- Accumulated information is calculated after the vehicle has run for more than 300 meters.
- If you press "OK" button for more than 1 second after the Cumulative Information is displayed, the information will be reset.
- If the engine is running, even when the vehicle is not in motion, the information will be accumulated.

Drive Info display

This display shows the trip distance (1), the average fuel efficiency (2), and the total driving time (3) information once per one ignition cycle.

OSP2I049116

- Fuel efficiency is calculated after the vehicle has run for more than 300 meters.
- The Driving Information will be reset 4 hours after ignition has been turned off. So, when the vehicle ignition is turned on within 4 hours, the information will not be reset.
- If you press "OK" button for more than 1 second after the Driving Information is displayed, the information will be reset.
- If the engine is running, even when the vehicle is not in motion, the information will be accumulated.

Digital speedometer

This digital speedometer display shows the speed of the vehicle.

OSK3048331CR

Service mode

This mode reminds you of scheduled maintenance information.

Service in

It calculates and displays when you need a scheduled maintenance service (mileage or days).

If the remaining mileage or time reaches 1,500 km (900 miles) or 30 days, "Service in" message is displayed for several seconds each time you set the ignition switch or ENGINE START/STOP Button to the ON position.

Service required

If you do not have your vehicle serviced according to the already inputted service interval, "Service required" message is displayed for several seconds each time you set the ignition switch or ENGINE

START/STOP Button to the ON position.

To reset the service interval to the mileage and days you inputted before:

- Press the OK button (Reset) for more than 1 second.

NOTICE

If any of the following conditions occurs, the mileage and days may be incorrect.

- The battery cable is disconnected.
- The battery is discharged.

Driving info display

At the end of each driving cycle, the Driving Info message is displayed.

OSP2I049116

This display shows the trip distance (1), average fuel economy (2), driving time (3).

This information is displayed for a few seconds when you turn off the vehicle, and then goes off automatically. The information is calculated for each time the vehicle is turned on.

NOTICE

- If sunroof open warning is displayed in the cluster, the Driving Information message may not be displayed.
- To set the charging time and/or climate time, refer to a separately supplied car navigation system manual for detailed information.

LCD display messages

Door, hood, tailgate, sunroof open

OSP2I049117

- This warning is displayed indicating which door, the hood, the tailgate or the sunroof is open.

Low Pressure warning display

OSP2I049129

This warning message is displayed if the tire pressure is low. The corresponding tire on the vehicle will be illuminated.

* For more details, refer to "Tire Pressure Monitoring System (TPMS) (if equipped)" on page 7-10.

Sunroof open (if equipped)

OSP2I049104

- This warning is displayed if you turn off the engine when the sunroof is open.

Lights mode

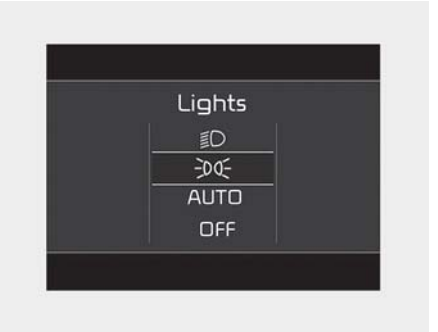

OSK3048123NR

This indicator displays which exterior light is selected using the lighting control.

You can activate or deactivate Wiper/Lights Display function from the User Settings mode in the cluster LCD display.

Wiper mode

OSP2I049118

This indicator displays which wiper speed is selected using the wiper control.

You can activate or deactivate Wiper/Lights Display function from

the User Settings mode in the cluster LCD display.

Engine has overheated

- This warning message illuminates when the engine coolant temperature is above 120 °C (248 °F). This mean that the engine is overheated and may be damaged.

* If your vehicle is overheated, refer to "If the engine overheats" on page 7-9.

Low key battery (for smart key system)

- This warning message illuminates if the battery of the smart key is discharged when the ENGINE START/STOP Button changes to the OFF position.

Press START button while turning wheel (for smart key system)

- This warning message illuminates if the steering wheel does not unlock normally when the ENGINE START/STOP Button is pressed.
- It means that you should press the ENGINE START/STOP Button while turning the steering wheel right and left.

Steering wheel unlocked (for smart key system)

- This warning message illuminates if the steering wheel does not lock when the ENGINE START/STOP Button changes to the OFF position.

Check steering wheel lock system (for smart key system)

- This warning message illuminates if the steering wheel does not lock normally when the ENGINE START/STOP Button changes to the OFF position.

Press clutch pedal to start engine (for smart key system and manual transmission)

- This warning message illuminates if the ENGINE START/STOP Button changes to the ACC position twice by pressing the button repeatedly without depressing the clutch pedal.
- It means that you should depress the clutch pedal to start the engine.

Key not in vehicle (for smart key system)

- This warning message illuminates if the smart key is not in the vehicle when you press the ENGINE START/STOP Button.
- It means that you should always have the smart key with you.

Key not detected (for smart key system)

- This warning message illuminates if the smart key is not detected when you press the ENGINE START/STOP Button.

Shift to P or N to start engine (for smart key system)

- This warning message illuminates if you try to start the engine with the shift lever not in the P (Park) or N (Neutral) position.

Press brake pedal to start engine (for smart key system)

- This warning message illuminates if the ENGINE START/STOP Button changes to the ACC position twice by pressing the button repeatedly without depressing the brake pedal.
- It means that you should depress the brake pedal to start the engine.

Battery discharging due to external electrical devices (if equipped)

The vehicle can detect self-discharge of the battery due to over-current that is generated by unauthorized electrical devices such as dashboard camera (dash cam) mounting during parking.

Please note that functions such as ISG are limited and battery discharge problems may occur.

If the warning continues even after external electrical devices are removed, have your vehicle inspected by a professional workshop. Kia recommends to contact an authorized Kia dealer/service partner.

Press start button again (for smart key system)

- This warning message illuminates if you can not operate the ENGINE START/STOP Button when there is a problem with the ENGINE START/STOP Button system.
- It means that you could start the engine by pressing the Engine Start/ Stop Button once more.
- If the warning illuminates each time you press the ENGINE START/STOP Button, have the vehicle inspected by a professional workshop. Kia recommends to visit an authorized Kia dealer/service partner.

Press start button with key (for smart key system)

- This warning message illuminates if you press the ENGINE START/STOP Button while the warning message "Key not detected" is illuminating.
- At this time, the immobilizer indicator light blinks.

Warning and indicator lights

The warning light and indicator light indicate a situation where the driver should be careful and whether the various functions are activated.

Warning lights

The warning light indicates situations that require the driver to pay attention.

✻ NOTICE

Warning lights

Make sure that all warning lights are OFF after starting the engine. If any light is still ON, this indicates a situation that needs attention.

Air bag warning light

This warning light illuminates:

- Once you set the ignition switch or ENGINE START/STOP Button to the ON position.
  - It illuminates for approximately 6 seconds and then goes off.
- When there is a malfunction with the SRS.
  In this case, have the vehicle inspected by a professional workshop. Kia recommends to visit an authorized Kia dealer/service partner.

Seat belt warning light

This warning light informs the driver that the seat belt is not fastened.

* For more details, refer to "Seat belts" on page 3-18.

Parking brake & brake fluid warning light

This warning light illuminates:

- Once you set the ignition switch or ENGINE START/STOP Button to the ON position.
  - It illuminates for approximately 3 seconds
  - It remains on if the parking brake is applied.
- When the parking brake is applied.
- When the brake fluid level in the reservoir is low.
  - If the warning light illuminates with the parking brake released, it indicates the brake fluid level in reservoir is low.

If the brake fluid level in the reservoir is low:

1. Drive carefully to the nearest safe location and stop your vehicle.
2. With the engine stopped, check the brake fluid level immediately and add fluid as required (For more details, refer to "Brake/clutch fluid" on page 8-22). Then check all brake components for fluid leaks. If any leak on the brake system is still found, the warning light remains on, or the brakes do not operate properly, do not drive the vehicle.
   In this case, have the vehicle towed to a professional workshop and inspected. Kia recommends to visit an authorized Kia dealer/service partner.

Dual-diagonal braking system

Your vehicle is equipped with dual-diagonal braking systems. This means you still have braking on two wheels even if one of the dual systems should fail.
With only one of the dual systems working, more than normal pedal travel and greater pedal pressure are required to stop the vehicle. Also, the vehicle will not stop in as short a distance with only a portion of the brake system working.
If the brakes fail while you are driving, shift to a lower gear for additional engine braking and stop the vehicle as soon as it is safe to do so.

⚠ WARNING

Parking Brake & Brake Fluid Warning Light

Driving the vehicle with a warning light ON is dangerous. If the Parking Brake & Brake Fluid Warning Light illuminates with the parking brake released, it indicates that the brake fluid level is low.

In this case, have the vehicle inspected by a professional workshop. Kia recommends to visit an authorized Kia dealer/service partner.

Anti-lock brake system (ABS) warning light

This warning light illuminates:

- Once you set the ignition switch or ENGINE START/STOP button to the ON position.
  - It illuminates for approximately 3 seconds and then goes off.
- When there is a malfunction with the ABS (The normal braking system will still be operational without the assistance of the anti-lock brake system).
  In this case, have the vehicle inspected by a professional workshop. Kia recommends to visit an authorized Kia dealer/service partner.

Electric Power Steering (EPS) warning light

This warning light illuminates:

- Once you set the ignition switch or ENGINE START/STOP Button to the ON position.
  - This indicator light comes on after the ignition key is turned to the ON position and then goes out after approximately 3 seconds.
- When there is a malfunction with the EPS.
  In this case, have the vehicle inspected by a professional workshop. Kia recommends to visit an authorized Kia dealer/service partner.

Charging System Warning Light

This warning light illuminates:

- Once you set the ignition switch or ENGINE START/STOP button to the ON position.
- When there is a malfunction with either the alternator or electrical charging system.

If there is a malfunction with either the alternator or electrical charging system:

1. Drive carefully to the nearest safe location and stop your vehicle.
2. Turn the engine off and check the alternator drive belt for looseness or breakage.
   In this case, have the vehicle inspected by a professional workshop. Kia recommends to visit an authorized Kia dealer/service partner.

Malfunction Indicator Lamp (MIL)

This warning light illuminates:

- Once you set the ignition switch or ENGINE START/STOP Button to the ON position.
  - It remains on until the engine is started.

⚠ CAUTION

Gasoline (Petrol) Engine

If the Malfunction Indicator Lamp (MIL) illuminates, potential catalytic converter damage is possible which could result in loss of engine power.

In this case, have the vehicle inspected by a professional workshop as soon as possible. Kia recommends to visit an authorized Kia dealer/service partner.

⚠ CAUTION

Diesel Engine

If the Malfunction Indicator Lamp (MIL) blinks, some error related to the injection quantity adjustment occurs which could result in loss of engine power, combustion noise and poor emission.

In this case, have the engine control system inspected by a professional workshop. Kia recommends to visit an authorized Kia dealer/service partner.

Engine oil pressure warning light

This warning light illuminates:

- Once you set the ignition switch or ENGINE START/STOP Button to the ON position.
  - It remains on until the engine is started.
- When the engine oil pressure is low.

If the engine oil pressure is low:

1. Drive carefully to the nearest safe location and stop your vehicle.
2. Turn the engine off and check the engine oil level (For more details, refer to "Engine oil and filter (for gasoline (petrol))" on page 8-23).
   If the level is low, add oil as required.
   If the warning light remains on after adding oil or if oil is not

available, have the vehicle inspected by a professional workshop as soon as possible. Kia recommends to visit an authorized Kia dealer/service partner.

⚠ CAUTION

Engine Oil Pressure Warning Light

- If the engine does not stop immediately after the Engine Oil Pressure Warning Light is illuminated, severe damage could result.
- If the warning light stays on while the engine is running, it indicates that there may be serious engine damage or malfunction. In this case,
  1. Stop the vehicle as soon as it is safe to do so.
  2. Turn off the engine and check the oil level. If the oil level is low, fill the engine oil to the proper level.
  3. Start the engine again. If the warning light stays on after the engine is started, turn the engine off immediately. In this case, have the vehicle inspected by a professional workshop. Kia recommends to visit an authorized Kia dealer/service partner.

Fuel Filter Warning Light (Diesel Engine)

This warning light illuminates:

- Once you set the ignition switch or ENGINE START/STOP Button to the ON position.
  - It illuminates for approximately 3 seconds and then goes off.
- When water has accumulated inside the fuel filter. In this case, remove the water from the fuel filter.

* For more details, refer to "Fuel Filter (for diesel)" on page 8-33

⚠ CAUTION

Fuel Filter Warning Light

- When the Fuel Filter Warning Light illuminates, engine power (vehicle speed & idle speed) may decrease.
- If you keep driving with the warning light on, engine parts (injector, common rail, high pressure fuel pump) may be damaged. If this occurs, have the vehicle inspected by a professional workshop as soon as possible. Kia recommends to visit an authorized Kia dealer/service partner.

Low Fuel Level Warning Light

This warning light illuminates:

When the fuel tank is nearly empty.

If the fuel tank is nearly empty:

Add fuel as soon as possible.

⚠ CAUTION

Low Fuel Level

Driving with the Low Fuel Level warning light on or with the fuel level below "E" can cause the engine to misfire and damage the catalytic converter. (if equipped)

Low Tire Pressure Warning Light (if equipped)

This warning light illuminates:

- Once you set the ignition switch or ENGINE START/STOP button to the ON position.
  - It illuminates for approximately 3 seconds and then goes off.
- When one or more of your tires are significantly under inflated. (The location of the underinflated tires are displayed on the LCD display).

* For more details, refer to "Tire Pressure Monitoring System (TPMS) (if equipped)" on page 7-10.

This warning light remains on after blinking for approximately 60 seconds or repeats blinking on and off at the intervals of approximately 3 seconds:

- When there is a malfunction with the TPMS.
  In this case, have the vehicle inspected by a professional workshop. Kia recommends to visit an authorized Kia dealer/service partner.

* For more details, refer to "Tire Pressure Monitoring System (TPMS) (if equipped)" on page 7-10.

⚠ WARNING

Low tire pressure

- Significantly low tire pressure makes the vehicle unstable and can contribute to loss of vehicle control and increased braking distances.
- Continued driving or low pressure tires will cause the tires to overheat and fail.

⚠ WARNING

Safe Stopping

- The TPMS cannot alert you to severe and sudden tire damage caused by external factors.
- If you notice any vehicle instability, immediately take your foot off the accelerator pedal, apply

the brakes gradually with light force, and slowly move to a safe position off the road.

Master warning light

This indicator light illuminates:

- This warning light informs the driver the following situations
  - LED headlamp malfunction (if equipped)
  - Lamp malfunction

To identify the details of the warning look at the LCD display.
If the warning situation is solved, the master warning light will turn off.

Exhaust system (DPF) warning light (for diesel engine) (if equipped)

This warning light illuminates:

- When there is a malfunction with Diesel Particulate Filter (DPF) system.
- When this warning light illuminates, it may turn off after driving the vehicle:
  - at more than 60km/h (37 mph), or
  - at more than 2nd gear with 1500 ~ 2000 engine rpm for a certain time (for about 25 minutes).

If this warning light blinks in spite of the procedure (at this time the LCD warning message will be displayed), have the DPF system checked by a professional workshop. Kia recommends to visit an authorized Kia dealer/service partner.

CAUTION

Diesel Engine with DPF (if equipped)

If you continue to drive with the DPF warning light blinking for a long time, the DPF system can be damaged and fuel consumption can worsen.

Exhaust system (GPF/PPF) warning light (for gasoline (petrol) engine) (if equipped)

This warning light illuminates:

- When there is a malfunction with Gasoline Particulate Filter (GPF) and Petrol Particulate Filter (PPF) system.
- When this warning light illuminates, it may turn off after driving the vehicle:
  - The vehicle should be driven for more than 30 minutes at a speed of 80 km/h (50 mph) and faster.
  - Ensure the following conditions are all met: safe road conditions, transmission 3rd gear or above, and engine speed of 1,500 – 4,000 rpm.

If this warning light blinks in spite of the procedure (at this time the LCD

warning message will be displayed), have the GPF system checked by a professional workshop. Kia recommends to visit an authorized Kia dealer/service partner.

⚠ CAUTION

Gasoline (Petrol) Engine with GPF/PPF (if equipped)

If you continue to drive with the GPF/PPF warning light blinking for a long time, the GPF/PPF system can be damaged and fuel consumption can worsen.

LED headlamp warning light

This warning light illuminates:

- Once you set the ENGINE START/STOP button to the ON position.
  - It illuminates for approximately 3 seconds and then goes off.
- When there is a malfunction with the LED headlamp.

In this case, have the vehicle inspected by a professional workshop. Kia recommends to visit an authorized Kia dealer/service partner.

This warning light blinks:

- When there is a malfunction with a LED headlamp related part.

In this case, have the vehicle inspected by a professional workshop. Kia recommends to visit an authorized Kia dealer/service partner.

Indicator lights

Electronic stability control (ESC) indicator light (if equipped)

This indicator light illuminates:

- Once you set the ignition switch or ENGINE START/STOP Button to the ON position.
  - It illuminates for approximately 3 seconds and then goes off.
- When there is a malfunction with the ESC system.
  In this case, have the vehicle inspected by a professional workshop. Kia recommends to visit an authorized Kia dealer/service partner.

This indicator light blinks:

While the ESC is operating.

* For more details, refer to "Electronic Stability Control (ESC) system (if equipped)" on page 6-49.

Electronic stability control (ESC) OFF indicator light (if equipped)

This indicator light illuminates:

- Once you set the ignition switch or ENGINE START/STOP Button to the ON position.
  - It illuminates for approximately 3 seconds and then goes off.
- When you deactivate the ESC system by pressing the ESC OFF button.

* For more details, refer to "Electronic Stability Control (ESC) system (if equipped)" on page 6-49.

Immobilizer Indicator Light (Without Smart Key) (if equipped)

This indicator light illuminates:

- When the vehicle detects the immobilizer in your key properly while the ignition switch is ON.
  - At this time, you can start the engine.
  - The indicator light goes off after starting the engine.

This indicator light blinks:

- When there is a malfunction with the immobilizer system.
  In this case, have the vehicle inspected by a professional workshop. Kia recommends to visit an authorized Kia dealer/service partner.

Immobilizer Indicator Light (With Smart Key) (if equipped)

This indicator light illuminates for up to 30 seconds:

- When the vehicle detects the smart key in the vehicle properly while the ENGINE START/STOP Button is ACC or ON.
  - At this time, you can start the engine.
  - The indicator light goes off after starting the engine.

This indicator light blinks for a few seconds:

- When the smart key is not in the vehicle.
  - At this time, you can not start the engine.

This indicator light illuminates for 2 seconds and goes off:

- When the vehicle can not detect the smart key which is in the vehicle while the ENGINE START/STOP Button is ON.
  In this case, have the vehicle inspected by a professional workshop. Kia recommends to visit an authorized Kia dealer/service partner.

This indicator light blinks:

- When the battery of the smart key is weak.
  - At this time, you can not start the engine. However, you can start the engine if you press the ENGINE START/STOP Button with the smart key. (For more details, refer to "Immobilizer system" on page 4-13).
- When there is a malfunction with the immobilizer system.
  In this case, have the vehicle inspected by a professional workshop. Kia recommends to visit an authorized Kia dealer/service partner.

Turn signal indicator light

This indicator light blinks:

- When you turn the turn signal light on.

If any of the following occurs, there may a malfunction with the turn signal system. In this case, have the vehicle inspected by a professional workshop. Kia recommends to visit an authorized Kia dealer/service partner.

- The indicator light does not blink but illuminates.
- The indicator light blinks more rapidly.
- The indicator light does not illuminate at all.

Low beam indicator light (if equipped)

This indicator light illuminates:

- When the headlights are on.

High beam indicator light

This indicator light illuminates:

- When the headlights are on and in the high beam position.
- When the turn signal lever is pulled into the Flash-to-Pass position.

Light ON indicator light

This indicator light illuminates:

- When the tail lights or headlights are on.

Front fog indicator light (if equipped)

This indicator light illuminates:

- When the front fog lights are on.

Glow Indicator Light (for diesel engine)

This indicator light illuminates:

- When the engine is being preheated with the ignition switch or ENGINE START/STOP Button in the ON position.
  - The engine can be started after the glow indicator light goes off.
  - The illumination time varies with the engine coolant temperature, air temperature, and battery condition.

If the indicator light remains on or blinks after the engine has warmed up or while driving, there may a malfunction with the engine preheating system.
In this case, have the vehicle inspected by a professional workshop. Kia recommends to visit an authorized Kia dealer/service partner.

NOTICE

Engine Preheating

If the engine does not start within 10 seconds after the preheating is completed, set the ignition switch or ENGINE START/STOP Button to the LOCK or OFF position for 10 seconds and then to the ON position in order to preheat the engine again.

Cruise indicator light CRUISE (if equipped)

This indicator light illuminates:

- When Cruise Control is enabled.

* For more details, refer to "CRUISE CONTROL (CC) (if equipped)" on page 6-62.

Head-Up Display (HUD) (if equipped)

The head up display is a transparent display which projects a shadow of some information of the instrument cluster and navigation on the HUD screen.

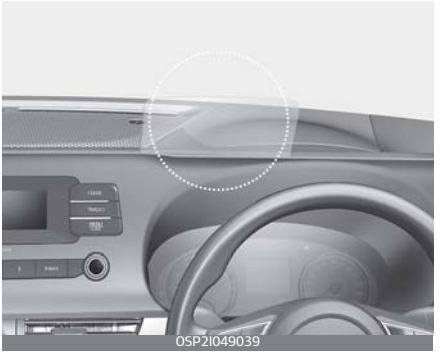
OSP2I049039

The hidden screen will go up when you press the screen operation switch on the left side of the lower part of crash pad and if you press the switch again, the screen will return to its original hidden position.

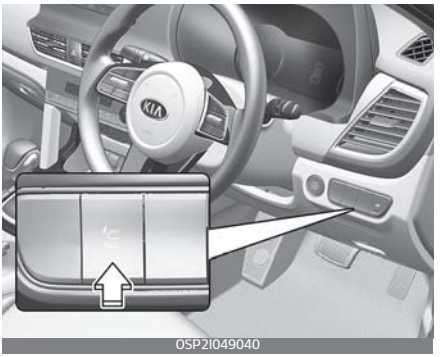
OSP2I049040

- The head up display image on the HUD screen may be invisible when:
  - Sitting posture is bad.
  - Wearing a polarized sunglasses.
  - There is an object on the cover of the head up display.
  - Driving on a wet road.
  - An inadequate lighting is turned on inside the vehicle.
  - Any light comes from the outside.
  - Wearing an inadequate glasses to your eyesight.
- If the head up display image is not shown well, adjust the height, rotation or illumination of the head up display in the cluster.
- When the head up display needs inspection or repair, Kia recommends to visit an authorized Kia dealer/service partner.

⚠ WARNING

Head-Up Display

- Do not place any accessories on the Head Up Display shutter. It might fall into Head Up Display and can damage to Head Up Display.

Head Up Display Information

OSP2I049041

1. Turn By Turn navigation information
2. Road signs
3. Speedometer
4. Cruise setting speed
5. Warning lights (Low fuel)
6. AV mode information

*** NOTICE**

Road Signs and Turn By Turn navigation information are available depending on the region.

Head up Display Setting

On the LCD display, you can change the head up display settings as follows.

1. Display height
2. Rotation
3. Brightness
4. Content selection
5. Speedometer size
6. Speedometer color

* For more details, refer to "LCD display modes" on page 4-55.

Rear View Monitor (RVM) (if equipped)

Rear View Monitor is a supplemental system that shows the area behind the vehicle on the multimedia system screen to assist you when parking or backing up.

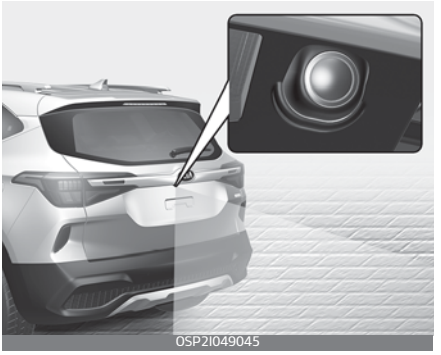
OSP2I049045

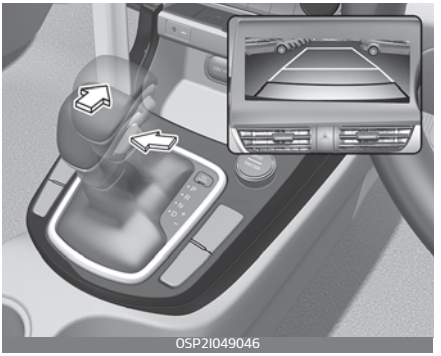
OSP2I049046

Rear View Monitor with parking guidance will activate when the engine is running and the shift lever is in the R (Reverse) position.

⚠ WARNING

- This system is a supplementary function only. It is the responsibility of the driver to always check the inside/outside rearview mirror and the area behind the vehicle before and while backing up because there is a dead zone that can't be seen through the camera.
- Always keep the camera lens clean. If lens is covered with foreign matter, the camera may not operate normally.

Driving Rear View Monitor (DRVM) function (if equipped)

Driving Rear View Monitor function is used to switch ON the Rear View Monitor when driving forward.

You can turn on the function by pressing the DRVM button (DRVM) on the infotainment display or by pressing Parking/View button (VIEW) on the console.

You can also assign DRVM function to Favorite Button (★) around the infotainment display.

Parking/View button

OSP2I049047

DRVM button

OSP2I049432

Favorite Button setting: DRVM

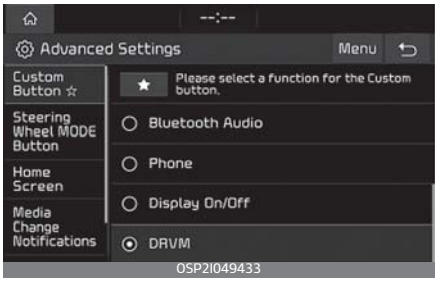

OSP2I049433

✻ NOTICE

No guidelines will be shown when DRVM is switched ON. Rear View has higher priority compared to DRVM View.

DRVM function activates when:

- 8” display: Turn the ignition switch ON, press the DRVM button ( ) in the display unit.
- 10” display: Turn the ignition switch ON, press the Parking/View button (VIEW) in the console.
- 10” display with SVM (if equipped): Turn the ignition switch ON, press Parking/View button (VIEW) in the console when the vehicle speed is 15 km/h and faster.

You can turn off DRVM function by doing one of the followings:

- Automatic transmission: Change the gear shift lever to "P" (Park).
- Manual transmission: Engage the parking brake.
- 8” display: Press the back button ( ) or any hard button in the display unit.
- 10” display: Parking/View button (VIEW) in the console again.
- 10” display with SVM (if equipped): Press Parking/View button (VIEW) in the console again.

Surround View Monitor (SVM) (if equipped)

Surround View Monitor is the parking support system that shows your surroundings around the vehicle.

OSP2I049047

OSP2I059020

- The system is activated when the following steps are performed.
  1. Parking/View button (1, indicator ON) is pressed.
  2. The shift lever is in D (Drive), N (Neutral) or R (Reverse) and vehicle speed is under 15 km/h (10 mph).
- The system is deactivated when one of the following is performed.
  - The Parking/View button (1, indicator OFF) is pressed again.
  - Vehicle speed is over 15 km/h (10 mph).
- When vehicle speed is over 15 km/h (10 mph), the system will turn off.
  The system will not automatically turn on again, even though vehicle speed gets below 15 km/h (10 mph).
  Press the button (1, indicator ON) again, to turn on the system.
- When the vehicle is backing up, the system will turn ON regardless of vehicle speed or button status.
  However, if vehicle speed is over 15 km/h (10 mph) when driving forward, SVM will turn off.
- A indicator on the screen appears when:
  - The tailgate is opened.
  - The driver's door is opened.
  - The passenger's door is opened.
  - The outside rearview mirror is folded.

- If the system is not operating normally, the system should be checked by a professional workshop. Kia recommends to visit an authorized Kia dealer/service partner.

⚠ WARNING

The system is a supplementary driving assist system. Make sure to check the vehicle's surroundings yourself for safety. Do not solely rely on what is displayed on the screen. What you see on the screen may differ from the actual vehicle's location.

✻ NOTICE

Always keep the camera lens clean. The camera may not work normally if the lens is covered with foreign material.

Reverse Parking Distance Warning (PDW)

Reverse Parking Distance Warning assists the driver when the vehicle is moving in reverse by chiming if any object is detected within a distance of 120 cm behind the vehicle.

This system is a supplemental system and it is not intended to nor does it replace the need for extreme care and attention of the driver. The sensing range and objects detectable by the back sensors (1) are limited. Whenever backing-up, pay as much attention to what is behind you as you would in a vehicle without a Reverse Parking Distance Warning.

⚠ WARNING

Reverse Parking Distance Warning is a supplementary function only. The operation of Reverse Parking Distance Warning can be affected by several factors (including environmental conditions). It is the responsibility of the driver to always check the area behind the vehicle before and while backing up.

Operation of Reverse Parking Distance Warning

Operating condition

- This system will activate when backing up with the ENGINE START/STOP button ON.
  If the vehicle is moving at a speed over 5 km/h, the system may not be activated correctly.
- The sensing distance while the back-up warning system is in operation is approximately 120 cm from the central area of the rear bumper and 60 cm from the side area of the rear bumper.
- When more than two objects are sensed at the same time, the closest one will be recognized first.

Types of warning sound

Distance from object	Warning indicator
When an object is 60 cm to 120 cm (24 in. to 47 in.) from the rear bumper: Buzzer beeps intermittently	
When an object is 30 cm to 60 cm (12 in. to 24 in.) from the rear bumper: Buzzer beeps more frequently.	
When an object is within 30 cm (12 in.) of the rear bumper: Buzzer beeps continuously.	

Non-operational conditions of Reverse Parking Distance Warning

Reverse Parking Distance Warning may not operate properly when:

- Moisture is frozen to the sensor. (It will operate normally once the moisture clears.)
- The sensor is covered with foreign matter, such as snow or water, or the sensor cover is blocked. (It will operate normally when the material is removed or the sensor is no longer blocked.)
- Driving on uneven road surfaces (unpaved roads, gravel, bumps, gradient).
- Objects generating excessive noise (vehicle horns, loud motorcycle engines, or truck air brakes) are within range of the sensor.
- There is rain or water spraying nearby.

- Wireless transmitters or mobile phones are within range of the sensor.
- The sensor is covered with snow.
- Trailer towing

The detecting range may decrease when:

- The sensor is covered with foreign matter such as snow or water. (The sensing range will return to normal when removed.)
- Outside air temperature is extremely hot or cold.

The following objects may not be recognized by the sensor:

- Sharp or slim objects such as ropes, chains or small poles.
- Objects which tend to absorb the frequency emitted by the sensor such as clothes, sound absorbent material or snow.

Reverse Parking Distance Warning precautions

- The sound of Reverse Parking Distance Warning may change depending on the speed and shape of the objects detected.
- There are undetectable objects smaller than 100 cm and narrower than 14 cm in diameter.
- Reverse Parking Distance Warning may malfunction if the vehicle bumper height or sensor installation has been modified or damaged. Any non-factory installed equipment or accessories may also interfere with the sensor performance.
- The sensor may not recognize objects less than 30 cm from the sensor, or it may sense an incorrect distance. Use caution.
- When the sensor is frozen or covered with snow, dirt, or water, the sensor may be inoperative until the material is removed using a soft cloth.
- To prevent damage, do not push, scratch or strike the sensor.

NOTICE

This system can only sense objects within the range and location of the sensors; It can not detect objects in other areas where sensors are not installed. Also, small or slim objects, such as poles or objects located between sensors may not be detected by the sensors.

Always visually check behind the vehicle when backing up.

Be sure to inform any drivers of the vehicle that may be unfamiliar with the system regarding the systems capabilities and limitations.

⚠ WARNING

Pay close attention when the vehicle is driven close to objects on the road, particularly pedestrians, and especially children. Be aware that some objects may not be detected by the sensors, due to the object's distance, size or material, all of which can limit the effectiveness of the sensor. Always perform a visual inspection to make sure the vehicle is clear of all obstructions before moving the vehicle in any direction.

Self-diagnosis

If you don't hear an audible warning sound or if the buzzer sounds intermittently when shifting the gear to the R (Reverse) position, this may indicate a malfunction in Reverse Parking Distance Warning. If this occurs, have your vehicle checked by an authorized Kia dealer as soon as possible.

⚠ WARNING

Your new vehicle warranty does not cover any accidents or damage to the vehicle or injuries to its occupants due to a Reverse Parking Distance Warning malfunction. Always drive safely and cautiously.

Forward/Reverse Parking Distance Warning (PDW) (if equipped)

Forward/Reverse Parking Distance Warning assists the driver during movement of the vehicle by chiming if any object is sensed within the distance of 100 cm in front and 120 cm behind the vehicle.

Rear

OSP2I049043

Front

OSP2I049042

The sensing range and objects detectable by the sensors (1) are limited. Whenever moving while using Forward/Reverse Parking Distance Warning, pay as much attention to what is in front and behind you as you would in a vehicle without Forward/Reverse Parking Distance Warning.

⚠ WARNING

Forward/Reverse Parking Distance Warning should only be considered as a supplementary function. The driver must check the front and rear view. The operational function of Forward/Reverse Parking Distance Warning can be affected by many factors and conditions of the surroundings, so the responsibility rests always with the driver.

Operation of Forward/Reverse Parking Distance Warning

Operating condition

- This system activates when the Parking Safety button is pressed with the ENGINE START/STOP button ON.
- The indicator of the Parking Safety button turns on automatically and activates Forward/Reverse Parking Distance Warning when you shift the gear to the R (Reverse) position.
- The sensing distance while backing up is approximately 120 cm when you are driving less than 10 km/h.
- The sensing distance while moving forward is approximately 100 cm when you are driving less than 10 km/h.

- When more than two objects are sensed at the same time, the closest one will be recognized first.
- The side sensors are activated when you shift the gear to the R (Reverse) position.
- If the vehicle speed is above 20 km/h, the system automatically turns off. To activate again, push the button.

NOTICE

It may not operate if it's distance from the object is already less than approximately 25 cm when the system is ON.

Type of warning indicator and sound

Distance from object		Warning indicator		Warning sound
		When driving forward	When driving reverse	
60 ~100 cm	Front		-	Buzzer beeps intermittently
60 ~120 cm	Rear	-		Buzzer beeps intermittently
30~60 cm	Front			Buzzer beeps frequently
	Rear	-		Buzzer beeps frequently
30 cm	Front			Buzzer beeps continuously
	Rear	-		Buzzer beeps continuously

NOTICE

- The actual warning sound and indicator may differ from the illustration depending on the objects or sensor status.
- Do not wash the vehicle's sensor with high pressure water.

NOTICE

- This system can only sense objects within the range and location of the sensors; it cannot detect objects in other areas where sensors are not installed. Also, small or slim objects, such as poles or objects located between sensors may not be detected by the sensors.
  Always visually check behind the vehicle when backing up.
- Be sure to inform any drivers of the vehicle that may be unfamiliar with the system regarding the system's capabilities and limitations.

Non-operational conditions of Forward/Reverse Parking Distance Warning

Forward/Reverse Parking Distance Warning may not operate normally when:

- Moisture is frozen to the sensor. (It will operate normally when moisture melts.)
- Sensor is covered with foreign matter, such as snow or water, or the sensor cover is blocked. (It will operate normally when the material is removed or the sensor is no longer blocked.)
- Sensor is stained with foreign matter such as snow or water. (Sensing range will return to normal when removed.)
- The Parking Safety button is off.

There is a possibility of Forward/Reverse Parking Distance Warning malfunction when:

- Driving on uneven road surfaces such as unpaved roads, gravel, bumps, or gradient.
- Objects generating excessive noise such as vehicle horns, loud motorcycle engines, or truck air brakes can interfere with the sensor.
- Heavy rain or water spray.
- Wireless transmitters or mobile phones present near the sensor.
- Sensor is covered with snow.

Detecting range may decrease when:

- Outside air temperature is extremely hot or cold.

The following objects may not be recognized by the sensor:

- Sharp or slim objects such as ropes, chains or small poles.
- Objects, which tend to absorb sensor frequency such as clothes, spongy material or snow.
- There are undetectable objects smaller than 100 cm and narrower than 14 cm in diameter.

NOTICE

1. The warning may not sound consistently depending on the speed and shapes of the objects detected.
2. Forward/Reverse Parking Distance Warning may malfunction if the vehicle bumper height or sensor installation has been modified. Any non-factory installed equipment or accessories may also interfere with the sensor performance.
3. Sensor may not recognize objects less than 30 cm from the sensor, or it may sense an incorrect distance. Use with caution.
4. When the sensor is frozen or stained with snow or water, the sensor may be inoperative until the stains are removed using a soft cloth.
5. Do not push, scratch or strike the sensor with any hard objects that could damage the surface of the sensor. Sensor damage could occur.

NOTICE

This system can only sense objects within the range and location of the sensors; it cannot detect objects in other areas where sensors are not installed. Also, small or slim objects, or objects located between sensors may not be detected.

Always visually check in front and behind the vehicle when driving. Be sure to inform any drivers in the vehicle that may be unfamiliar with the system regarding the systems capabilities and limitations.

WARNING

Pay close attention when the vehicle is driven close to objects on the road, particularly pedestrians, and especially children. Be aware that some objects may not be detected by the sensors, due to the objects distance, size or material, all of which can limit the effectiveness of the sensor. Always perform a visual inspection to make sure the vehicle is clear of all obstructions before moving the vehicle in any direction.

Self-diagnosis

When you shift the gear to the R (Reverse) position and if one or more of the below occurs you may have a malfunction in Forward/ Reverse Parking Distance Warning.

- You don't hear an audible warning sound or if the buzzer sounds intermittently.
- (blinks) is displayed.

If this occurs, have your vehicle checked by an authorized Kia dealer as soon as possible.

⚠ WARNING

Your new vehicle warranty does not cover any accidents or damage to the vehicle or injuries to its occupants. Always drive safely and cautiously.

Lighting

This vehicle is equipped with a variety of lights to illuminate the interior and exterior of the vehicle.

⚠ CAUTION

To prevent the battery from being discharged, do not leave the headlight and interior light on for a prolonged time while the engine is not running.

Battery saver function

The purpose of this feature is to prevent the battery from being discharged if the lights are left in the ON position. The system automatically shuts off the position lamp 30 seconds after the vehicle is turned off and the driver's door is opened and closed.

With this feature, the position lamp will turn off automatically if the driver parks on the side of the road at night and opens the driver's side door.

If necessary, to keep the position lamp on when the vehicle is turned off, perform the following:

1. Open the driver-side door.
2. Turn the position lamp OFF and ON again using the light switch on the steering column.

Daytime Running Light (DRL) (if equipped)

The Daytime Running Light (DRL) can make it easier for others to see the front of your vehicle during the day.

The DRL can be helpful in many different driving conditions, and it is especially helpful after dawn and before sunset.

The DRL will turn the dedicated lamp OFF when:

- The headlight switch is on.
- The vehicle is off.
- The front fog light is on.
- Engaging the Parking Brake.

Lighting control

The light switch has a headlight and a position lamp position.

OSP2I049048

To operate the lights, turn the knob at the end of the control lever to one of the following positions:

1. OFF position
2. Auto light position (if equipped)
3. Position & Tail lamp
4. Headlight position

Position & Tail lamp

OSP2I049049

When the light switch is in the position lamp position, the front position lamp and auxiliary lamp (if equipped), tail, license light will turn ON.

NOTICE

Auxiliary lamp will be ON only in position lamp condition.

Head light (Low Beam)

OSP2I049050

When the light switch is in the head light position, head light (low beam), tail, license light will turn ON.

NOTICE

The ignition switch must be in the ON position to turn on the head-lights.

Auto light (if equipped)

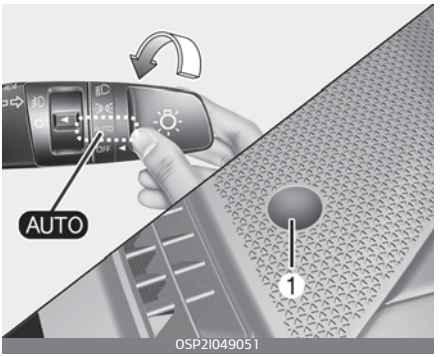

OSP2I049051

When the light switch is in the AUTO light position, the taillights and headlights will turn ON or OFF auto-matically depending on the amount of light outside the vehicle.

CAUTION

- Never place anything over the sensor (1) located on the instru-ment panel as this will ensure better auto-light system control.
- Don't clean the sensor using a window cleaner, the cleaner may leave a light film which could interfere with sensor operation.
- If your vehicle has window tint or other types of metallic coating on the front windshield, the Auto light system may not work prop-erly.

Operating high beam

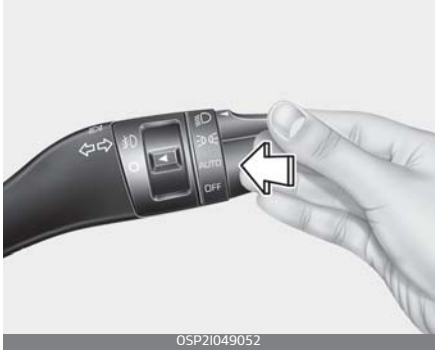

OSP2I049052

To turn on the high beam headlamp:

- Push the lever away from you.
  The lever will return to its original position.
  The high beam indicator will light when the headlight high beams are switched on.

⚠ WARNING

Do not use high beam when there are other vehicles. Using high beam could obstruct the other driver's vision.

To flash the headlights:

- Pull the lever towards you.

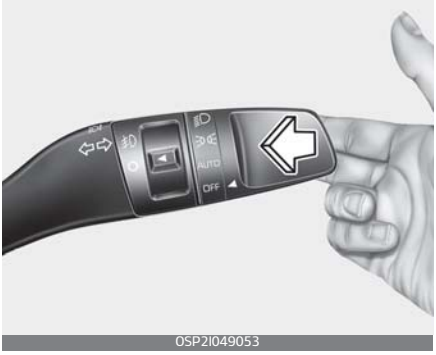

OSP2I049053

It will return to the normal (low beam) position when released. The headlight switch does not need to be on to use this flashing feature.

Operating turn signals and lane change signals

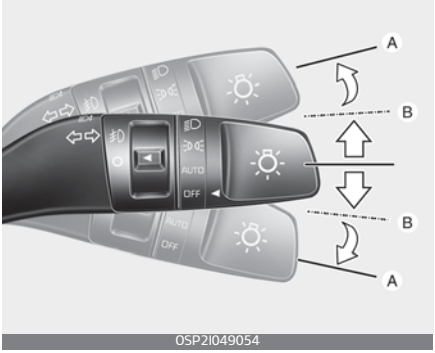

OSP2I049054

The ENGINE START/STOP button must be on for the turn signals to function.

To turn on the turn signals:

- Move the lever up or down (A).
  The green arrow indicators on the instrument panel indicate which turn signal is operating.

They will self-cancel after a turn is completed. If the indicator continues to flash after a turn, manually return the lever to the OFF position.

To signal a lane change:

- Move the turn signal lever slightly and hold it in position (B).
  The lever will return to the OFF position when released.

If an indicator stays on and does not flash or if it flashes abnormally, one of the turn signal bulbs may be burned out and will require replacement.

One-touch lane change function

To activate a one-touch lane change function, move the turn signal lever slightly and then release it. The lane change signals will blink 3, 5 or 7 times.

You can activate or deactivate the One Touch Turn Signal function or choose the number of blinking (3, 5, or 7) by selecting "User Settings → Lights → One Touch Turn signal".

NOTICE

If an indicator flash is abnormally quick or slow, a bulb may be burned out or have a poor electrical connection in the circuit.

Operating front fog light (if equipped)

Fog lights are designed to provide improved visibility when visibility is poor due to fog, rain or snow, etc.

The fog lights will turn on when the fog light switch (1) is turned to the on position after the headlight is turned on.

To turn off the fog lights:

- Turn the fog light switch (1) to the ON position.

CAUTION

When in operation, the fog lights consume large amounts of vehicle electrical power. Only use the fog lights when visibility is poor.

Headlight leveling device

To adjust the headlight beam level according to the number of the passengers and loading weight in the luggage area, turn the beam leveling switch.

The higher the number of the switch position, the lower the headlight beam level. Always keep the headlight beam at the proper leveling position, or headlights may dazzle other road users.

Listed below are the examples of proper switch settings. For loading conditions other than those listed below, adjust the switch position so that the beam level may be the nearest as the condition obtained according to the list.

Loading condition	Switch position
Driver only	0
Driver + Front passenger	0
Full passengers (including driver)	1
Full passengers (including driver) + Maximum permissible loading	2
Driver + Maximum permissible loading	3

Wipers and washers

The wipers and washers remove foreign substances from the windshield and rear window, helping to maintain visibility.

Front windshield wiper/washer

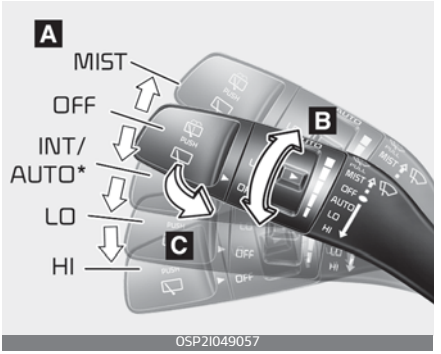

OSP21049057

Rear windshield wiper/washer

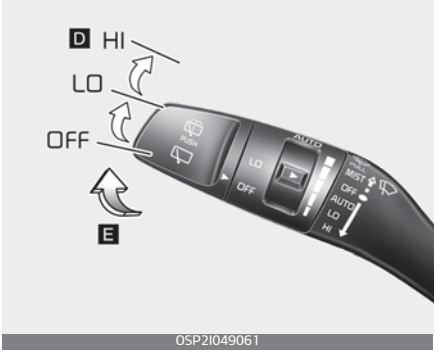

OSP21049061

A: Wiper speed control (front)

- MIST – Single wipe
- OFF – Off
- INT – Intermittent wipe
  AUTO* – Rain sensing (Auto control)
- LO – Low wiper speed
- HI – High wiper speed

B: Intermittent control wipe time adjustment

C: Wash with brief wipes (front)

D: Rear wiper/washer control *

- HI – Continuous wipe
- LO – Intermittent wipe
- OFF – Off

E: Wash with brief wipes (rear)

*: if equipped

NOTICE

If there is heavy accumulation of snow or ice on the windshield, defrost the windshield for about 10 minutes, or until the snow and/or ice is removed before using the windshield wipers to ensure proper operation. If you do not remove the snow and/or ice before using the wiper and washer, it may damage the wiper and washer system.

Auto control (if equipped)

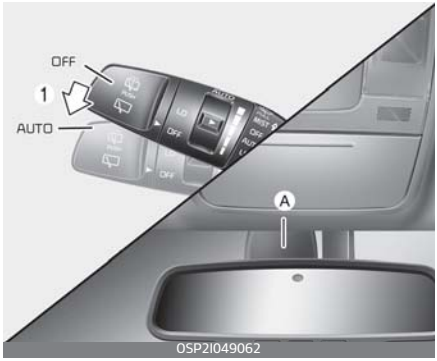

The rain sensor (A) located on the upper end of the windshield glass senses the amount of rainfall and controls the wiping cycle for the proper interval. The more it rains, the faster the wiper operates. When the rain stops, the wiper stops.

To vary the speed setting, turn the speed control knob (1).

If the wiper switch is set in AUTO mode when the ignition switch is ON, the wiper will operate once to perform a self-check of the system. Set the wiper to OFF position when the wiper is not in use.

⚠ CAUTION

When the ignition switch is ON and the windshield wiper switch is placed in the AUTO mode, use caution in the following situations to avoid any injury to the hands or other parts of the body:

- Do not touch the upper end of the windshield glass facing the rain sensor.
- Do not wipe the upper end of the windshield glass with a damp or wet cloth.
- Do not put pressure on the windshield glass.

⚠ CAUTION

- When washing the vehicle, set the wiper switch in the OFF position to stop the auto wiper operation. The wiper may operate and be damaged if the switch is set in the AUTO mode while washing the vehicle.
- Do not remove the sensor cover located on the upper end of the passenger side windshield glass. Damage to system parts could occur and may not be covered by your vehicle warranty.
- When starting the vehicle in winter, set the wiper switch in the OFF position. Otherwise, wipers may operate and ice may damage the windshield wiper blades. Always remove all snow and ice and defrost the windshield properly prior to operating the windshield wipers.
- When tinting the windshield, be careful of any fluid getting into the sensor located in the top cen-

ter of the front windshield. It may damage the related parts.

Operating windshield washers

OSP2I049093

1. Move the wiper speed control switch to In OFF position.
2. Pull the lever gently toward you to spray washer fluid on the windshield and to run the wipers 1-3 cycles. Use this function when the windshield is dirty. The spray and wiper operation will continue until you release the lever.

If the washer does not work, check the washer fluid level. If the fluid level is not sufficient, you will need to add appropriate non-abrasive windshield washer fluid to the washer reservoir.

The reservoir filler neck is located in the front of the motor compartment on the passenger side.

⚠ CAUTION

To prevent possible damage to the washer pump, do not operate the washer when the fluid reservoir is empty.

⚠ WARNING

Do not use the washer in freezing temperatures without first warming the windshield with the defrosters; the washer solution could freeze on the windshield and obscure your vision.

⚠ CAUTION

- To prevent possible damage to the wipers or windshield, do not operate the wipers when the windshield is dry.
- To prevent damage to the wiper blades, do not use gasoline (petrol), kerosene, paint thinner, or other solvents on or near them.
- To prevent damage to the wiper arms and other components, do not attempt to move the wipers manually.
- To prevent possible damage to the wipers and washer system, use anti-freezing washer fluids in the winter season or cold weather.

Operating rear window wiper and washer switch

The rear window wiper and washer switch is located at the end of the wiper and washer switch lever.

- Turn the switch to the desired position to operate the rear wiper and washer.

OSP2I049094

- HI / 2 – Normal wiper operation
- LO / 1 – Intermittent wiper operation (if equipped)
- OFF / 0 – Wiper is not in operation
- Push the lever away from you to spray rear washer fluid and to run the rear wipers 1~3 cycles.

OSP2I049095

The spray and wiper operation will continue until you release the lever.

4

Interior lights

This vehicle is equipped with lights throughout the vehicle to illuminate the interior.

⚠ CAUTION

Do not use the interior lights for extended periods when the engine is not running.
It may cause battery discharge.

⚠ WARNING

Do not use the interior lights when driving in the dark. Accidents could happen because the view may be obscured by interior lights.

Automatic turn off function (if equipped)

The interior lights automatically turn off approximately 20 minutes after the ENGINE START/STOP button is turned off, if the lights are in the ON position.

If your vehicle is equipped with the theft alarm system, the interior lights automatically turn off approximately 5 seconds after the system is armed.

Map lamp

Type A

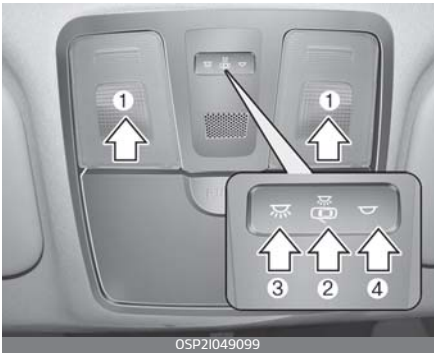

OSP2I049099

Type B

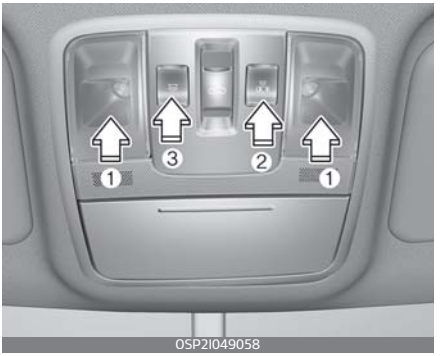

OSP2I049058

- Press the lens (1) to turn ON the map lamp.
  To turn the map lamp OFF press the lens (1) again.
- (2): DOOR mode
  - The map lamp and room lamp come on when a door is opened. The lamps go out after approximately 30 seconds.
  - The map lamp and room lamp come on for approximately 30 seconds when doors are unlocked with a smart key as

long as the doors are not opened.
- The map lamp and room lamp will stay on for approximately 20 minutes if a door is opened with the ENGINE START/STOP button in the ACC or OFF position.
- The map lamp and room lamp will stay on continuously if the door is opened with the ENGINE START/STOP button in the ON position.
- The map lamp and room lamp will go out immediately if the ENGINE START/STOP button is changed to the ON position or all doors are locked.
- To turn off the DOOR mode, press the DOOR button (2) once again (not pressed).

• (3): Press this switch to turn the front and rear room lamps on and off.

NOTICE

The DOOR mode and ROOM mode can not be selected at a time.

Room lamp

• (1): The light stays on at all times.

Luggage room lamp (if equipped)

The luggage room lamp comes on when the tailgate is opened.

CAUTION

The luggage room lamp comes on as long as the tailgate opens. To prevent unnecessary charging system drain, close the tailgate securely after using the luggage room.

Welcome system (if equipped)

The welcome system is a function that illuminates the surroundings or the interior when the driver approaches or exits the vehicle.

Headlight (headlamp) escort function

The headlights (and/or taillights) remain on for approximately 5 minutes after the vehicle is turned off. However, if the driver's door is opened and closed, the headlights are turned off after 15 seconds.

The headlights can be turned off by pressing the lock button on the smart key twice or turning off the light switch from the headlight or Auto light position.

Interior light

When the interior light switch is in the DOOR position and all doors (and tailgate) are locked and closed, the room lamp will come on for 30 seconds if any of the following occurs:

- With the smart key system
  - When the door unlock button is pressed on the smart key.
  - When the button of the outside door handle is pressed.

At this time, if you press the door lock button, the lamps will turn off immediately.

Defroster (if equipped)

The vehicle is equipped with a defroster for removing frost or fog from the rear window.

⚠ CAUTION

Conductors

To prevent damage to the conductors bonded to the inside surface of the rear window, never use sharp instruments or window cleaners containing abrasives to clean the window.

If you want to defrost and defog the front windshield, refer to "Windshield defrosting and defogging" on page 4-125.

Operating rear window defroster

The defroster heats the window to remove frost, fog and thin ice from the rear window, while the engine is on.

If there is heavy accumulation of snow on the rear window, brush it off before operating the rear defroster.

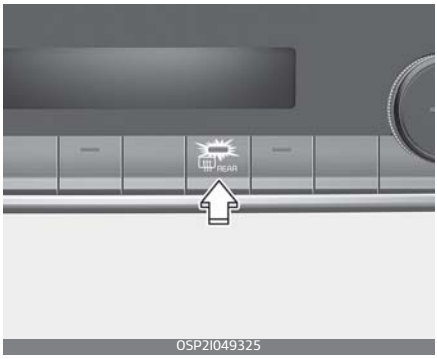

OSP2I049325

To activate the rear window defroster:

- Press the rear window defroster button located in the heater control panel.
  The indicator on the rear window defroster button illuminates when the defroster is ON.
  The rear window defroster automatically turns off after approximately 20 minutes or when the ENGINE START/STOP button is turned off.

To turn off the defroster:

- Press the rear window defroster button again.

Climate control system

The climate control system uses cooling and heating to help maintain a pleasant environment inside the vehicle.

System operation

Ventilation

1. Set the mode to the position.
2. Set the air intake control to the outside (fresh) air position.
3. Set the temperature control to the desired position.
4. Set the fan speed control to the desired speed.

Heating

1. Set the mode to the position.
2. Set the air intake control to the outside (fresh) air position.
3. Set the temperature control to the desired position.
4. Set the fan speed control to the desired speed.
5. If dehumidified heating is desired, turn the air conditioning system on.
   - If the windshield fogs up, set the mode to the or position.

4

Operation tips

- To keep dust or unpleasant fumes from entering the vehicle through the ventilation system, temporarily set the air intake control to the recirculated air position. Be sure to return the control to the fresh air position when the irritation has passed to keep fresh air in the vehicle. This will help keep the driver alert and comfortable.
- Air for the heating/cooling system is drawn in through the grilles just at the base of the windshield. Care should be taken that these are not blocked by leaves, snow, ice or other obstructions.
- To prevent fog from forming on the inside of the windshield:
  - Set the air intake control to the fresh air position and the fan speed to the desired position.
  - Turn on the air conditioning system, and adjust the temperature control to desired temperature.

Air conditioning (A/C)

All Kia air conditioning systems are filled with R-134a refrigerant.

1. Start the vehicle. Press the A/C button.
2. Set the mode to the position.
3. Set the air intake control to the outside-air or recirculated air position.
4. Adjust the fan speed control and temperature control to maintain maximum comfort.

⚠ CAUTION

Excessive Air conditioning Use

When using the air conditioning system, monitor the temperature gauge closely while driving up hills or in heavy traffic when outside temperatures are high. Air conditioning system operation may cause vehicle overheating. Continue to use the blower fan but turn the air conditioning system off if the temperature gauge indicates vehicle overheating.

⚠ CAUTION

The air conditioning system should only be used with the windows and sunroof closed to prevent condensation inside the vehicle that may cause damage to electrical components.

Air conditioning system operation tips

- If the vehicle has been parked in direct sunlight during hot weather, open the windows for a short time to let the hot air inside the vehicle escape.
- To help reduce moisture inside of the windows on rainy or humid days, decrease the humidity inside the vehicle by operating the air conditioning system.
- During air conditioning system operation, you may occasionally notice a slight change in vehicle speed as the air conditioning compressor cycles. This is a normal characteristic of system operation.
- To ensure maximum system performance, the air conditioning system should be ran for a few minutes each month.
- When using the air conditioning system, you may notice clear water dripping (or even puddling) on the ground under the passenger side of the vehicle. This is a normal characteristic of system operation.
- Operating the air conditioning system in the recirculated air position provides maximum cooling; however, continual operation in this mode may cause the air inside the vehicle to become stale.
- During cooling operation, you may occasionally notice a misty air flow because of rapid cooling and humid air intake. This is a normal characteristic of system operation.

Climate control air filter

The climate control air filter installed behind the glove box filters the dust or other pollutants that come into the vehicle from the outside through the heating and air conditioning system.

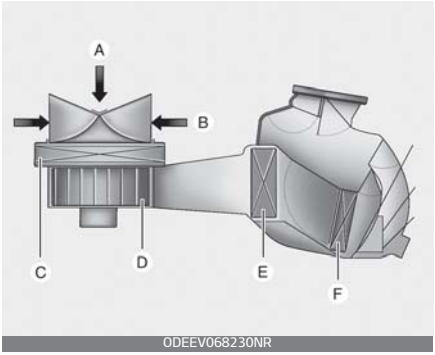

A: Outside air

B: Recirculated air

C: Climate control air filter

D: Blower

E: Evaporator core

F: Heater core

If dust or other pollutants accumulate in the filter over a period of time, the air flow from the air vents may decrease. This leads to moisture accumulating on the inside of the windshield even when the outside (fresh) air position is selected. If this happens, have the climate control air filter replaced by a professional workshop. Kia recommends to visit an authorized Kia dealer/service partner.

NOTICE

- Replace the filter according to the Maintenance Schedule. If the vehicle is being driven in severe conditions such as dusty or rough roads, more frequent air conditioner filter inspections and changes are required.
- When the air flow rate suddenly decreases, have the system checked by a professional workshop. Kia recommends to visit an authorized Kia dealer/service partner.

Checking the amount of air conditioner refrigerant and compressor lubricant

When the amount of refrigerant is low, the performance of the air conditioning is reduced. Overfilling also has a negative impact on the air conditioning system. Therefore, if abnormal operation is found, have the system inspected by a professional workshop. Kia recommends to visit an authorized Kia dealer/service partner.

WARNING

The oil and refrigerant in your vehicle's air conditioning system is under very high pressure. If proper service procedures are not followed an explosion may result. To reduce the risk of serious injury or death, the air conditioning system in your vehicle should only be serviced by trained and certified Kia technicians.

CAUTION

It is important that the correct type and amount of oil and refrigerant is used, otherwise, damage to the vehicle may occur. To prevent damage, the air conditioning system in your vehicle should only be serviced by trained and certified Kia technicians.

WARNING

Vehicles equipped with R-134a*

Because the refrigerant is at very high pressure, the air conditioning system should only be serviced by trained and certified technicians. It is important that the

correct type and amount of oil and refrigerant is used.

Otherwise, it may cause damage to the vehicle and personal injury.

Air conditioning refrigerant label

Example

OBDC069053RE

* The actual air conditioning refrigerant label in the vehicle may differ from the illustration.

Each symbol and specification on the air conditioning refrigerant label is represented below:

1. Classification of refrigerant
2. Amount of refrigerant
3. Classification of Compressor lubricant

Refer to "Refrigerant label" on page 9-12 for more detail on the location of air conditioning refrigerant label.

Sunroof inside air recirculation (if equipped)

The outside (fresh) air position is automatically selected, when the sunroof is opened.

When you select the recirculated air position, the system maintains the recirculated air position for 3 minutes and then automatically converts to the outside (fresh) air position.

When the sunroof is closed, the air intake position will return to the original position that was selected.

Manual climate control system (if equipped)

The manual climate control system uses cooling and heating to help maintain a pleasant environment inside the vehicle.

OSP2I049300

1. Fan speed control knob
2. Air intake control button
3. Mode selection knob
4. Temp control knob
5. Air conditioning (A/C) button
6. Rear window defroster (if equipped)

⚠ CAUTION

Operating the blower when the ignition switch is in the ON position could cause the battery to discharge. Operate the blower when the engine is running.

Heating and air conditioning

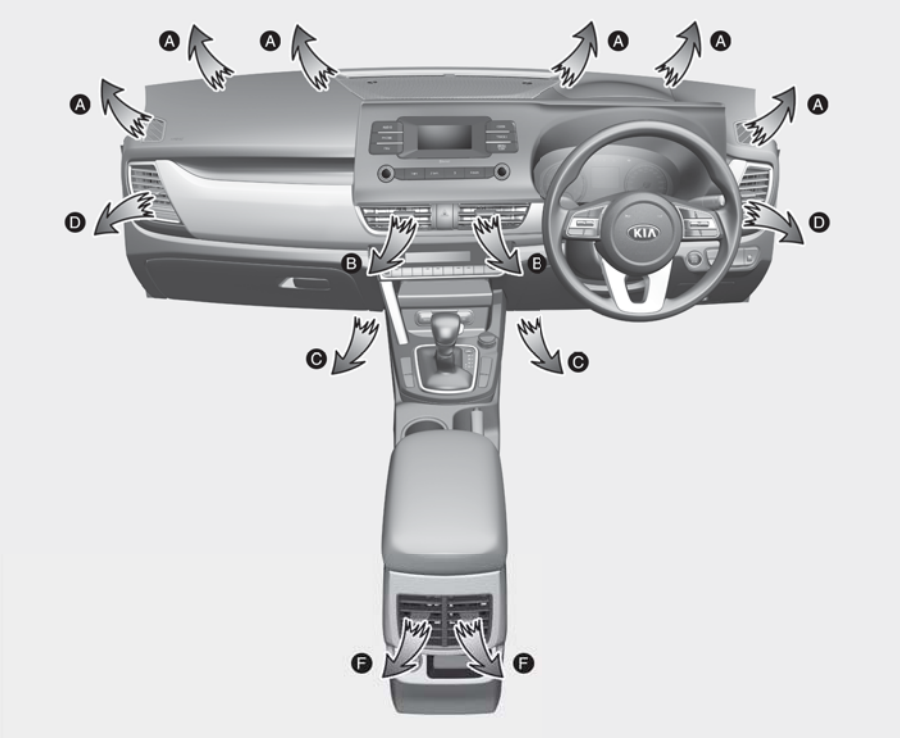

OSP2I049301

1. Start the engine.
2. Set the mode to the desired position.
   For improving the effectiveness of heating and cooling;
   - Heating:
   - Cooling:
3. Set the temperature control to the desired position.
4. Set the air intake control to the outside (fresh) air position.
5. Set the fan speed control to the desired speed.
   If air conditioning is desired, turn the air conditioning system on.

Mode selection

The mode selection buttons control the direction of the air flow through the ventilation system.

OSP2I049302

Air can be directed to the floor, dashboard outlets, or windshield. Five symbols are used to represent Face, Bi-Level, Floor, Floor-Defrost and Defrost air position.

Face-Level (B, D, F)

Air flow is directed toward the upper body and face. Additionally, each outlet can be controlled to direct the air discharged from the outlet.

Bi-Level (B, C, D, F)

Air flow is directed towards the face and the floor.

Floor-Level (A, C, D, F)

Most of the air flow is directed to the floor, with a small amount of the air being directed to the windshield, side window defrosters and side air vents.

Floor/Defrost-Level (A, C, D)

Most of the air flow is directed to the floor and the windshield with a small amount directed to the side window defrosters and side air vents.

Defrost-Level (A, D)

Most of the air flow is directed to the windshield with a small amount of air directed to the side window defrosters and side air vents.

Instrument panel vents

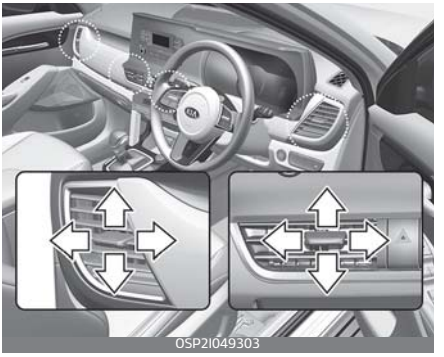

OSP2I049303

You can adjust the direction of air delivered from these vents using the vent control lever as shown.

Temperature control

The temperature control knob allows you to control the temperature of the air flowing from the ventilation system.

OSP2I049304

To change the air temperature in the passenger compartment, turn the knob to the right for warm and hot air or to the left for cooler air.

Controlling air intake

The air intake control is used to select the outside (fresh) air position or recirculated air position.

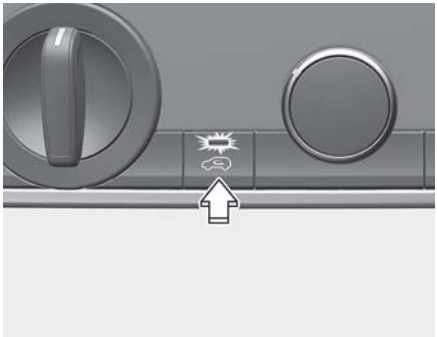

OSP2I049306

To change the air intake control position.

- Push the desired control button

Recirculated air position

The indicator light on the button illuminates when the recirculated air position is selected.
With the recirculated air position selected, air from the passenger compartment will be drawn through the heating system and heated or cooled according to the function selected.

Outside (fresh) air position

The indicator light on the button will turn off when the outside (fresh) air position is selected.
With the outside (fresh) air position selected, air enters the vehicle from outside and is heated or cooled according to the function selected.

NOTICE

Prolonged operation of the heater in the recirculated air position (without air conditioning selected) may cause fogging of the windshield and side windows and make the air in the passenger compartment stale.

In addition, prolonged use of the air conditioning with the recirculated air position selected will result in excessively dry air in the passenger compartment.

WARNING

- Continue using the climate control system in the recirculated air position may allow humidity to increase inside the vehicle which may fog the glass and obscure visibility.
- Do not sleep in a vehicle with the air conditioning or heating system on. It may cause serious harm or death due to a drop in the oxygen level and/or body temperature.
- Continue using the climate control system in the recirculated air position can cause drowsiness or sleepiness, and loss of vehicle control. Set the air intake control to the outside (fresh) air position as much as possible while driving.

Controlling fan speed

The fan speed control knob allows you to control the fan speed of the air flowing from the ventilation system.

The ENGINE START/STOP button must be in the ON position for fan operation.

To change the fan speed:

- Turn the knob to the right for higher speed or left for lower speed.

OSP2I049307

- Setting the fan speed control knob to the "0" position turns off the fan.

Turning off the blowers

To turn off the blowers:

- Turn the fan speed control knob to the "0" position.

OSP2I049308

Air conditioning (A/C)

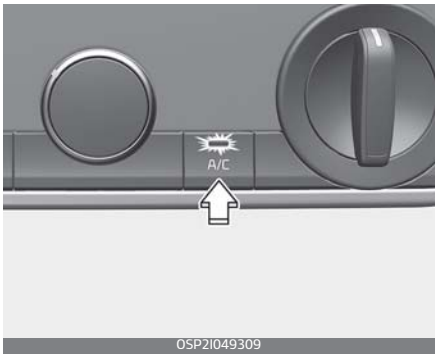

- Press the A/C button to turn the air conditioning system on (indicator light will illuminate).
- Press the button again to turn the air conditioning system off.

Automatic climate control system (if equipped)

The automatic climate control system uses cooling and heating to help maintain a pleasant environment inside the vehicle.

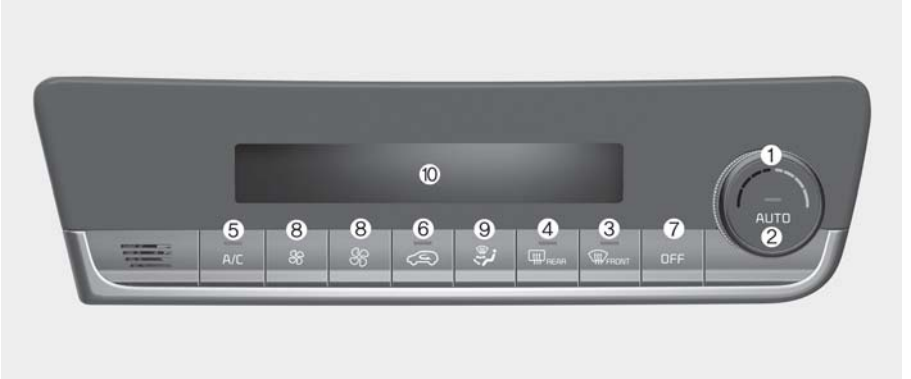

OSP2I049310

1. Temperature control button
2. AUTO (automatic control) button
3. Front windshield defroster button
4. Rear window defroster button
5. Air conditioning (A/C) button
6. Air intake control button
7. OFF button
8. Fan speed control button
9. Mode selection button
10. Climate control display

NOTICE

Operating the blower when the ignition switch is in the ON position could cause the battery to discharge. Operate the blower when the engine is running.

Heating and air conditioning automatically

1. Press the AUTO button.
   The modes, fan speeds, air intake and air-conditioning will be controlled automatically by setting the temperature.

OSP2I049311

2. Turn the temperature control switch to the desired temperature.

OSP2I049312

NOTICE

- To turn the automatic operation off, select any button or switch of the following:
  - Mode selection button
  - Air conditioning button
  - Front windshield defroster button (Press the button one more time to deselect the front windshield defroster function. The AUTO sign will illuminate on the information display once again.)
  - Fan speed control knob

  The selected function will be controlled manually while other functions operate automatically.
- For your convenience and to improve the effectiveness of the climate control, use the AUTO button and set the temperature to 22 °C (72 °F).

NOTICE

Never place anything over the sensor located on the instrument panel to ensure better control of the heating and cooling system.

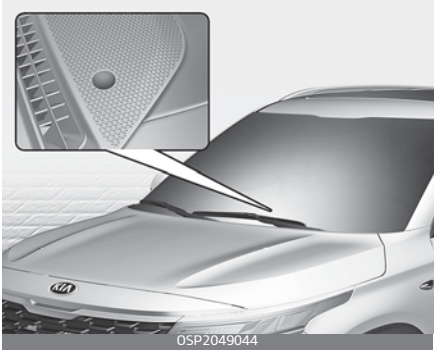
OSP2049044

Heating and air conditioning manually

The heating and cooling system can be controlled manually by pressing but-tons other than the AUTO button.

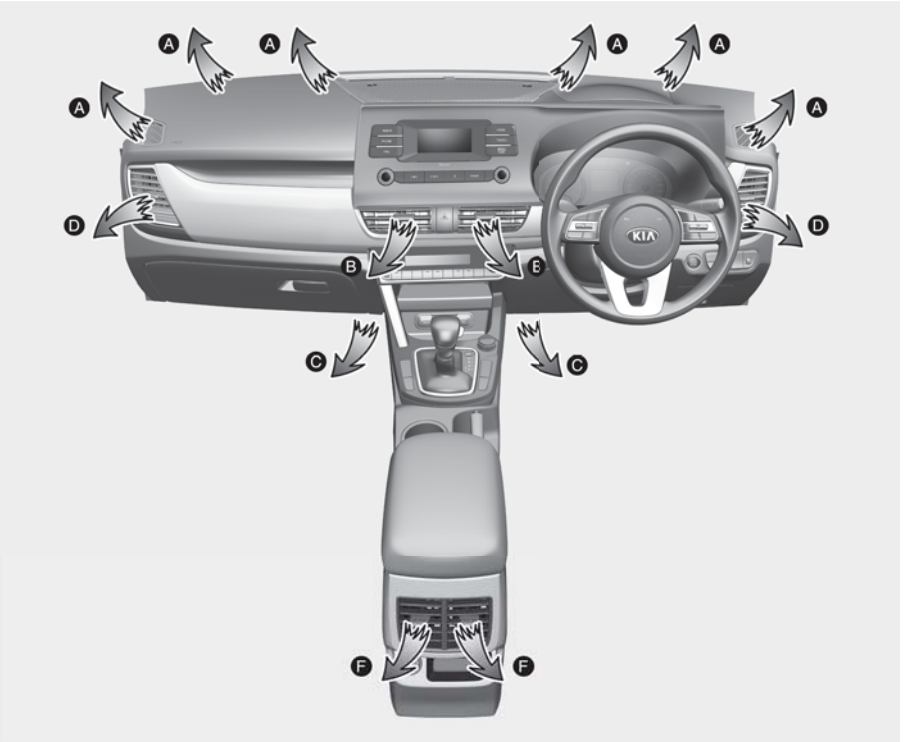

OSP2I049301

In this case, the system works sequentially according to the order of but-tons selected.

1. Start the vehicle.
2. Set the mode to the desired position.
   For improving the effectiveness of heating and cooling;
   - Heating:
   - Cooling:
3. Set the temperature control to the desired position.
4. Set the air intake control to the outside (fresh) air position.
5. Set the fan speed control to the desired speed.
   If air conditioning is desired, turn the air conditioning system on.

Press the AUTO button in order to convert to fully automatic control of the system.

Mode selection

The mode selection button controls the direction of the air flow through the ventilation system.

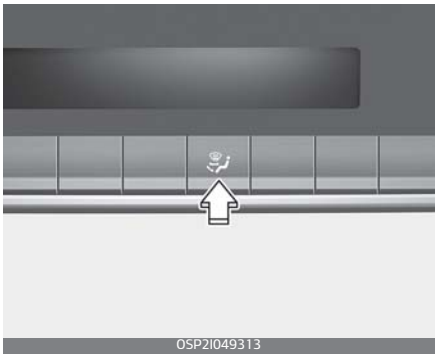

The air flow outlet ports are switched in the following sequence:

Face-Level (B, D, F)

Air flow is directed toward the upper body and face. Additionally, each outlet can be controlled to direct the air discharged from the outlet.

Bi-Level (B, C, D, F)

Air flow is directed towards the face and the floor.

Floor-Level (A, C, D, F)

Most of the air flow is directed to the floor, with a small amount of the air being directed to the wind-shield, side window defrosters and side air vents.

Floor/Defrost-Level (A, C, D, F)

Most of the air flow is directed to the floor and the windshield with a small amount directed to the side window defrosters and side air vents.

Defrost-Level (A, D)

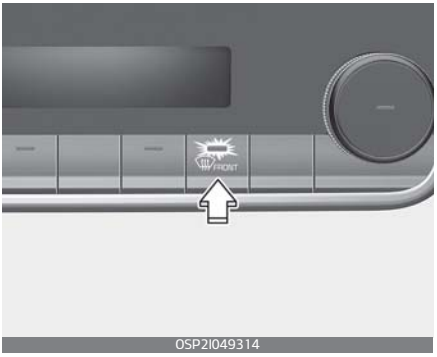

Most of the air flow is directed to the windshield with a small amount of air directed to the side window defrosters and side air vents.

Instrument panel vents

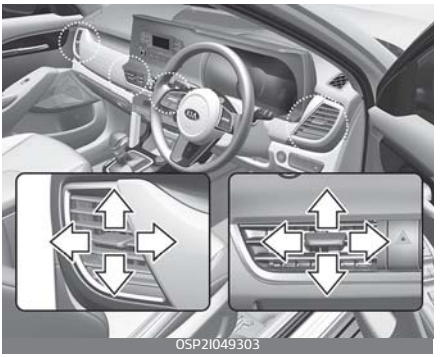
OSP2I049303

You can adjust the direction of air delivered from these vents using the vent control lever as shown.

Temperature control

OSP2I049312

The temperature will increase to the maximum (HI) by rotating the knob clockwise direction.

The temperature will decrease to the minimum (Lo) by rotating the knob anti clock wise direction.

When rotating the knob, the temperature will increase or decrease by 0.5 °C. When set to the lowest temperature setting, the air conditioning will operate continuously.

Changing temperature scale

You can switch the temperature mode from Centigrade to Fahrenheit as follows:

- While pressing the OFF button, press the AUTO button for 3 seconds or more.

The display will change from Centigrade to Fahrenheit, or from Fahrenheit to Centigrade. If the battery has been discharged or disconnected, the temperature mode display will reset to Centigrade.

Controlling air intake

This is used to select the outside (fresh) air position or recirculated air position.

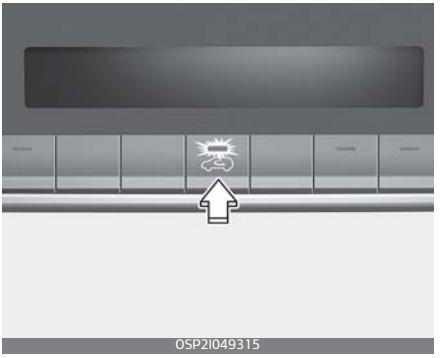
OSP2I049315

To change the air intake control position:

- Push the desired control button.

Recirculated air position

With the recirculated air position selected, air from the passenger compartment will be drawn through the heating system and heated or cooled according to the function selected.

Outside (fresh) air position

With the outside (fresh) air position selected, air enters the vehicle from outside and is heated or cooled according to the function selected.

NOTICE

Prolonged operation of the heater in the recirculated air position (without air conditioning selected) may cause fogging of the windshield and side windows and the air within the passenger compartment may become stale.

In addition, prolonged use of the air conditioning with the recirculated air position selected will result in excessively dry air in the passenger compartment.

WARNING

- Continued climate control system operation in the recirculated air position may allow humidity to increase inside the vehicle which may fog the glass and obscure visibility.
- Do not sleep in a vehicle with the air conditioning or heating system on. It may cause serious harm or death due to a drop in the oxygen level and/or body temperature.
- Continued climate control system operation in the recirculated air position can cause drowsiness or sleepiness, and loss of vehicle control. Set the air intake control to the outside (fresh) air position as much as possible while driving.

Controlling fan speed

The fan speed can be set to the desired speed by operating the fan speed control button.

To change the fan speed:

- Press button right for higher speed, or press button left for lower speed.

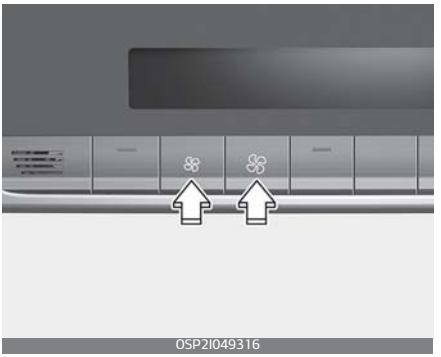

OSP21049316

To turn the fan speed control off:

- Press the OFF button.

Air conditioning (A/C)

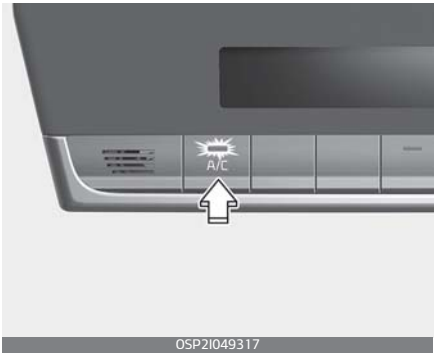

OSP21049317

- Press the A/C button to turn the air conditioning system on (indicator light will illuminate).
- Press the button again to turn the air conditioning system off.

Turning off the front air climate control

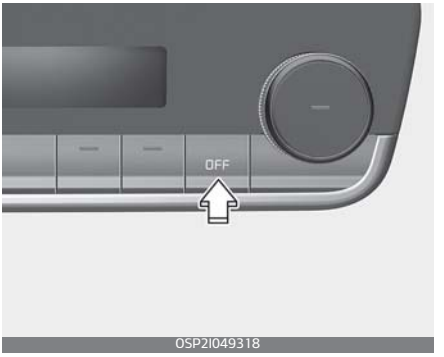

OSP21049318

- Press the OFF button to turn off the air climate control system. However, you can still operate the mode and air intake buttons as long as the ENGINE START/STOP button is in the ON position.

Windshield defrosting and defogging

When the windshield is covered with frost or moisture, the front view is blurred, so you should remove the frost and moisture.

⚠ WARNING

Windshield heating

Do not use the or position during cooling operation in extremely humid weather. The difference between the temperature of the outside air and the windshield could cause the outer surface of the windshield to fog up, causing loss of visibility. In this case, set the mode selection to the position and fan speed control to the lower speed.

- For maximum defrosting, set the temperature control to the extreme right/hot position and the fan speed control to the highest speed.
- If warm air to the floor is desired while defrosting or defogging, set the mode to the floor-defrost position.
- Before driving, clear all snow and ice from the windshield, rear window, outside rear view mirrors, and all side windows.
- Clear all snow and ice from the hood and air inlet in the cowl grill to improve heater and defroster efficiency and to reduce the probability of fogging up the inside of the windshield.

Defogging inside windshield with manual climate control system

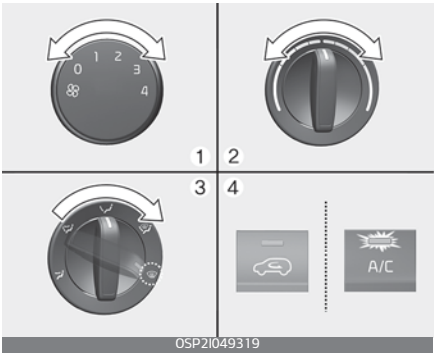

1. Select any fan speed except "0" position.
2. Select desired temperature.
3. Select the or position.
4. The outside (fresh) air and air conditioning will be selected automatically.

If the air conditioning and outside (fresh) air position are not selected automatically, press the corresponding button manually.

Defrosting outside windshield with manual climate control system

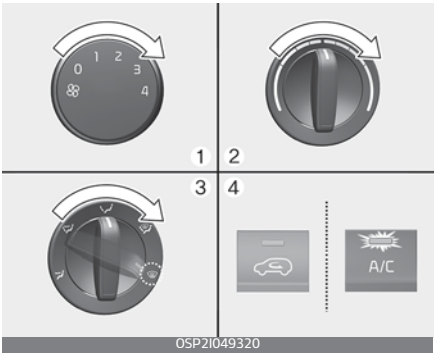

1. Set the fan speed to the highest (extreme right) position.
2. Set the temperature to the extreme hot position.
3. Select the position.
4. The outside (fresh) air and air conditioning will be selected automatically.

Defogging inside windshield with the automatic climate control

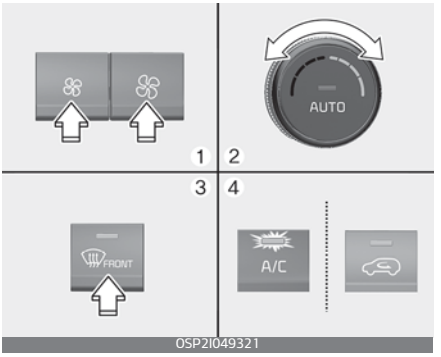

1. Set the fan speed to the desired position.
2. Select desired temperature.
3. Press the defroster button ( ).
4. The outside (fresh) air position will be selected automatically and the air conditioning will turn on according to the detected ambient temperature.

If the air conditioning and outside (fresh) air position are not selected automatically, adjust the corresponding button manually. If the position is selected, lower fan speed is adjusted to a higher fan speed.

Defrosting outside windshield with automatic climate control

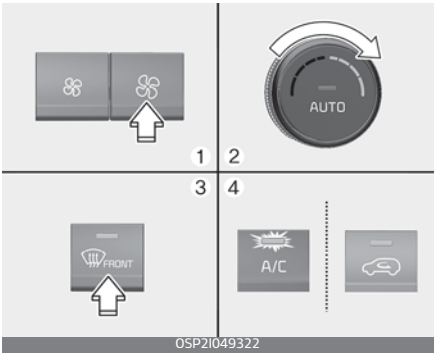

1. Set the fan speed to the highest position.
2. Set the temperature to the extreme hot (HI) position.
3. Press the defroster button ( ).
4. The outside (fresh) air position will be selected automatically and the air conditioning will turn on according to the detected ambient temperature.

Storage compartment

These compartments can be used to store small items required by the driver or passengers.

⚠ CAUTION

- To avoid possible theft, do not leave valuables in the storage compartment.
- Always keep the storage compartment covers closed while driving. Do not attempt to place so many items in the storage compartment that the storage compartment cover cannot close securely.

⚠ WARNING

Flammable materials

Do not store, propane cylinders or other flammable/explosive materials in the vehicle. These items may catch fire and/or explode if the vehicle is exposed to hot temperatures for extended periods.

Center console storage

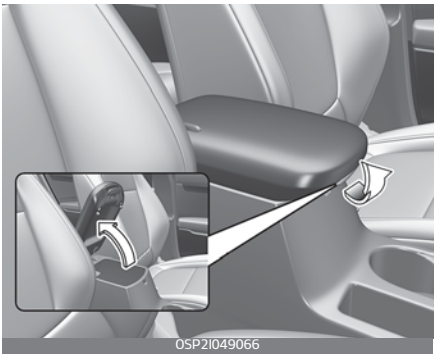

To open the center console storage:

- Pull up the cover.

Glove box

To open the glove box:

- Pull the handle and the glove box will automatically open.

Close the glove box after use.

⚠ WARNING

Glove Box

To reduce the risk of injury in an accident or sudden stop, always keep the glove box door closed while driving.

⚠ CAUTION

Do not keep food in the glove box for a long time.

Sunglass holder

To open the sunglass holder:

- Press the cover and the holder will slowly open.

Place your sunglasses with the lenses facing out. To close the sunglass holder push it up.

⚠ WARNING

- Do not keep objects except sunglasses inside the sunglass holder. Such objects can be thrown from the holder in the event of a sudden stop or an accident, possibly injuring the passengers in the vehicle.
- Do not open the sunglass holder while the vehicle is moving. The rear view mirror of the vehicle can be blocked by an opened sunglass holder.
- Do not put the glasses forcibly into a sunglass holder to prevent breakage or deformation of the glasses. It may cause personal injury if you try to open it forcibly when the glasses are jammed in the holder.

Luggage net holder (if equipped)

OSP2I049069

To keep items from shifting in the cargo area, you can use the 4 holders located in the cargo area to attach the luggage net.

⚠ CAUTION

To prevent damage to the goods or the vehicle, be careful when carrying fragile or bulky objects in the luggage compartment.

⚠ WARNING

Avoid eye injury. DO NOT overstretch the luggage net, ALWAYS keep your face and body out of the luggage net's recoil path. DO NOT use when the strap has visible signs of wear or damage.

Luggage board

You can place first aid kit, reflector triangle, etc. under the luggage board.

OSP2I049070

1. Grasp the lift strap on the top of the cover and lift it.
2. Fold the rear part of luggage board frontward.
3. Lift up luggage board frontward (Luggage board stand itself)

Interior features

There are various features inside the vehicle for the convenience of the occupants.

Ambient light and Sound mood lamp (if equipped)

The Ambient light and Sound mood lamps (if equipped) are applied to the front passenger's crash pad and front door speakers.

OSP2I049423

OSP2I049422

When the headlamp light is on, the ambient light is on at the same time Sound mood lamps (if equipped) could be set in the audio or infotainment menu.

Refer to the audio section of this manual and the infotainment manual for details.

Cup holder

Front

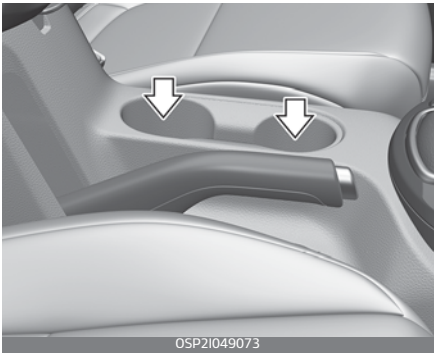
OSP2I049073

Rear (if equipped)

OSP2I049074

Cups or small beverage cans may be placed in the cup holders.

⚠ WARNING

Hot liquids

- Do not place uncovered cups with hot liquid in the cup holder while the vehicle is in motion. If the hot liquid spills, you burn yourself. Such a burn to the driver could lead to loss of control of the vehicle.
- To reduce the risk of personal injury in the event of sudden stop or collision, do not place uncovered or unsecured bottles, glasses, cans, etc., in the cup holder while the vehicle is in motion.

⚠ WARNING

Keep cans or bottles out of direct sun light and do not put them in a vehicle that is heated up. It may explode.

✻ NOTICE

- Keep your drinks sealed while driving to prevent spilling your drink. If liquid spills, it may get into the vehicle's electrical/electronic system and damage electrical/ electronic parts.
- When cleaning spilled liquids, do not dry the cup holder at high temperature. This may damage the cup holder.

Sliding armrest (if equipped)

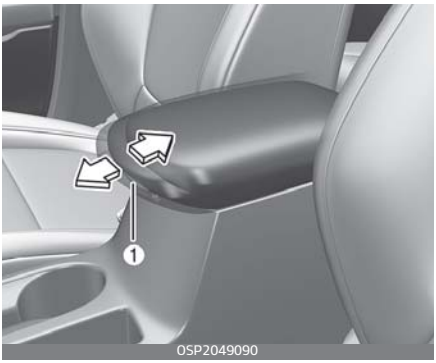

To move forward:

- Grab the front portion of the armrest (1) and pull it forward

⚠ WARNING

Do not grab the front portion of the armrest (1) when moving the armrest rearward. It may pinch your fingers.

To move rearward:

- Push the armrest rearward with your palm.

Air ventilation seat (if equipped)

Front seat

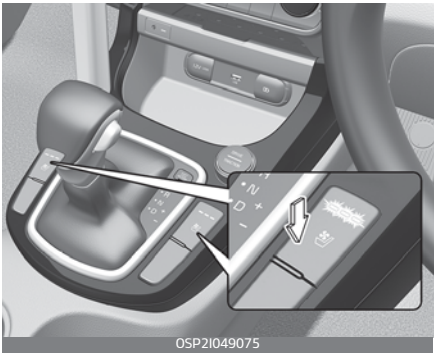

The temperature setting of the seat changes according to the switch position.

- To ventilate your seat cushion, press the switch.
  Each time you press the switch, the airflow will change as follows:

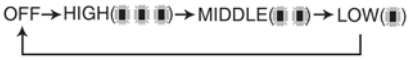

The seat warmer (with air ventilation) defaults to the OFF position whenever the ENGINE START/STOP button is turned on.

⚠ CAUTION

Seat damage

- When cleaning the seats, do not use an organic solvent such as paint thinner, benzene, alcohol and gasoline (petrol). Doing so may damage the air ventilation seat.

Sun visor

Use the sun visor to shield direct light through the front or side windows.

- To use the sun visor, pull it downward.
- To use the sun visor for the side window, pull it downward, unsnap it from the bracket (1) and swing it to the side (2).

Power outlet

The power outlet is designed to provide power for mobile telephones or other devices designed to operate with vehicle electrical systems.

Front

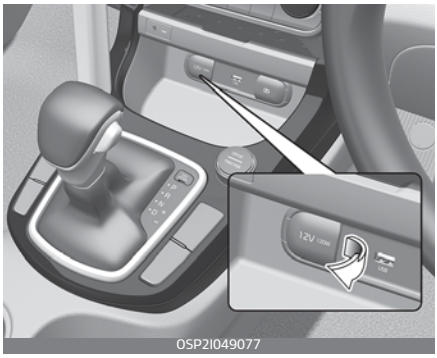

The devices should draw less than 10 amps with the vehicle on.

⚠ WARNING

- Use the power outlet only when the vehicle is on and remove the accessory plug after use. Using the accessory plug for prolonged periods of time with the vehicle off could cause the battery to discharge.
- Only use 12 V electric accessories which are less than 10 A in electric capacity.
- Adjust the air-conditioner or heater to the lowest operating level when using the power outlet.
- Close the cover when not in use.
- Some electronic devices can cause electronic interference when plugged into a vehicle's power outlet. These devices may cause excessive audio static and malfunctions in other electronic systems or devices used in your vehicle.
- Push the plug in as far as it will go. If good contact is not made, the plug may overheat and the fuse may open.
- Plug in battery equipped electronic devices with reverse current protection. The current from the battery may flow into the vehicle's electrical/electronic system and cause system malfunction.

⚠ WARNING

Electric shock

Do not put a finger or a foreign object (pen, etc.) into a power outlet and do not touch with a wet hand. You may get an electric shock.

USB charger

The USB car charger allows drivers to charge their digital devices like smartphone, and PC tablets.

Front

Rear

Connect the cable to the USB port, charging will begin.

The USB car charger is available with either the ACC state or the ignition on. But we recommend you to connect the USB port and digital devices with the engine starting. See the display screen of the device to check its charging process completion. Your smartphone or table PC could get heated up while charging. This is no reason to worry, as it doesn't impact life or functions of the device. For the safety reason, charging can be stopped if the battery gets heated up to a certain point of temperature that the devices can be negatively affected. Charging some digital devices is not available or requires special dedicated adapters if their charging methods don't fit the way the USB car charger works. Quick Charge 2.0 is available on the smartphone or the table PC equipped with fast charging capabilities. The applicable is as follows: (https://www.qualcomm.com/documents/quick-charge-device-list)

The smartphone or PC tablet without fast charging is charged at a regular speed.

Rated output:

- Digital devices with fast charging:
  - 9.0 V, 1.67 A
- Digital devices with normal charging:
  - 5.0 V, 2.1 A

⚠ CAUTION

- Used the USB car charger with the ignition on. Otherwise, Vehicle battery can be discharged.
- Use the official USB cable of the manufacturer of the digital device to be charged.
- Make sure that any foreign object, drinks, and water do not come into contact with the USB car charger. Water or foreign object can damage the USB charger.
- Do not use the device those current consumption exceeds 2.1 A.
- Do not connect an electrical device that generates excessive electromagnetic noise to the USB car port. If you do so, noise can be caused or vehicle electronic devices can be interrupted while audio or AV is on.
- If the charger is connected incorrectly, it can cause serious damage on the devices. Please note that damages due to incorrect usage are not covered by warranty service.

Wireless smart phone charging system (if equipped)

A wireless smart phone charging system is located in front of the center console.

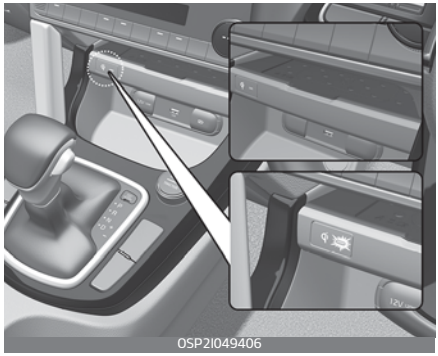

Firmly close all doors, and turn the ignition to ACC or IGN ON. To start wireless charging, place the smart phone equipped with wireless charging function on the wireless charging pad.

For best wireless charging results, place the smart phone on the center of the charging pad.

The wireless charging system is designed for one smart phone equipped with QI only. Please refer to the smart phone accessory cover or the smart phone manufacturer homepage to check whether your smart phone supports QI function.

⚠ WARNING

If any metallic object such as coins is located between the wireless charging system and the smart phone, the charging may be disrupted. Also, the metallic object may heat up.

Wireless smart phone charging

1. Remove any object on the smart phone charging pad including the smart key. If there is any foreign object on the pad other than a smart phone, the wireless charging function may not operate properly.
2. Place the smart phone on the center of the wireless charging pad.
3. The indicator light will change to orange once the wireless charging begins. After the charging is complete, the orange light will change to green.
4. You can choose to turn the wireless charging function to either ON or OFF by selecting the USM on the instrument cluster. (Please refer to "Instrument cluster" on page 4-48 for details).

If the wireless charging does not work, gently move your smart phone around the pad until the charging indicator light turns yellow. Depending on the smart phone, the charging indicator light may not turn green even after the charging is complete.

If the wireless charging is not functioning properly, the orange light will blink and flash for ten seconds then turn off. In such cases, remove the smart phone from the pad and replace it on the pad again, or double check the charging status.

If you leave the smart phone on the charging pad when the vehicle ignition is in OFF, the vehicle will alert you through warning messages and sound (applicable for vehicles with voice guidance function) after the 'Good bye' function on the instrument cluster ends.

✻ NOTICE

For some manufacturers' smart phones, the system may not warn you even though the smart phone is left on the wireless charging unit. This is due to the particular characteristic of the smart phone and not a malfunction of the wireless charging.

⚠ CAUTION

- When the interior temperature of the wireless charging system rises above a set temperature, the wireless charging will cease to function. After the interior temperature drops below the threshold, the wireless charging function will resume.
- If there is any metallic object between the smart phone and the wireless charging pad, immediately remove the smart phone. Remove the metallic object after it has completely cooled down.
- The wireless charging may not function properly when there is a heavy accessory cover on the smart phone.
- The wireless charging will stop when using the wireless smart key search function to prevent radio wave disruption.
- The wireless charging will stop when the smart key is moved out of the vehicle with the ignition in ON.
- The wireless charging will stop when any of the doors is opened (applicable for vehicles equipped with smart keys).
- The wireless charging will stop when the vehicle is turned OFF.
- The wireless charging will stop when the smart phone is not in complete contact with the wireless charging pad.
- Items equipped with magnetic components such as credit card, telephone card, bankbook, any transportation ticket and such may become damaged during wireless charging.
- Place the smart phone on the center of the charge pad for best results. The smart phone may not charge when placed near the rim of the charging pad. When the smart phone does get charged, it may heat up excessively.
- For smart phones without builtin wireless charging system, an appropriate accessory has to be equipped.
- Smart phones of some manufacturers may display messages on weak current. This is due to the particular characteristic of the smart phone and does not imply a malfunction on wireless charging function.
- The indicator light of some manufacturers' smart phones may still be yellow after the smart phone is fully charged. This is due to the particular characteristic of the smart phone and not a malfunction of the wireless charging.
- When any smart phone without a wireless charging function or a metallic object is placed on the charging pad, a small noise may sound. This small sound is due to the vehicle discerning compatibility of the object placed on the

charging pad. It does not affect your vehicle or the smart phone in any way.

- The wireless cellular phone charging system may not support certain cellular phones, which are not verified for the Qi specification ( ).
- For certain cellular phones with their own protection, the wireless charging speed may decrease and the wireless charging may stop.

Coat hook

A Coat hook is next to the rear grab handle.

* This actual feature may differ from the illustration.

⚠ CAUTION

Hanging clothing

Do not hang heavy clothes, since they may damage the hook.

⚠ WARNING

Do not hang other objects such as hangers or hard objects except clothes. Also, do not put heavy, sharp or breakable objects in the clothing's pockets. In an accident or when the curtain air bag is inflated, it may cause vehicle damage or body injury.

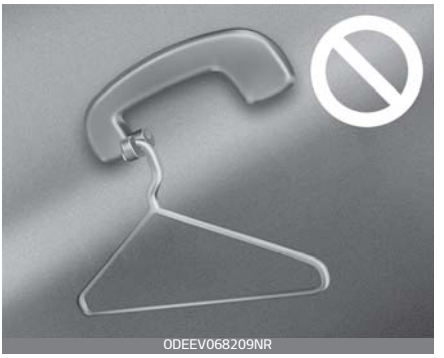

Floor mat anchor(s) (if equipped)

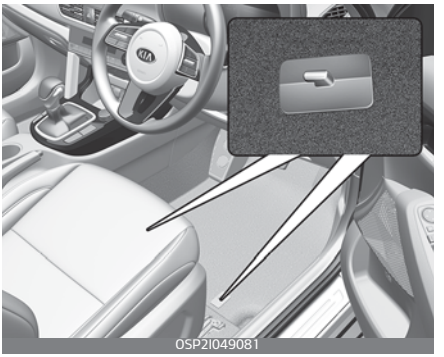

When using a floor mat on the front floor carpet, make sure it attaches to the floor mat anchor(s) in your vehicle. This keeps the floor mat from sliding forward.

WARNING

After market floor mat

Do not install after market floor mats that are not capable of being securely attached to the vehicle's floor mat anchors.

Unsecured floor mats can interfere with pedal operation.

The following must be observed when installing ANY floor mat to the vehicle.

- Ensure that the floor mats are securely attached to the vehicle's floor mat anchor(s) before driving the vehicle.
- Do not use ANY floor mat that cannot be firmly attached to the vehicle's floor mat anchors.
- Do not stack floor mats on top of one another (e.g., all-weather rubber mat on top of a carpeted floor mat). Only a single floor mat should be installed in each position.

Cargo area cover (if equipped)

Use the cargo area cover to hide items stored in the cargo area.

Removal and installation

To remove the cargo area cover:

1. Remove straps from both sides of the cargo area cover.

2. While lifting the cover up, hold the area near the front slots. Then, pull up the cover at approximately 45 ° angle.

WARNING

Do not place objects on the cargo area cover. Such objects may be thrown about inside the vehicle and possibly injure vehicle occupants during an accident or when braking.

CAUTION

Since the cargo area cover may be damaged or malformed, do not put luggage on it when it is used.

Side curtain (if equipped)

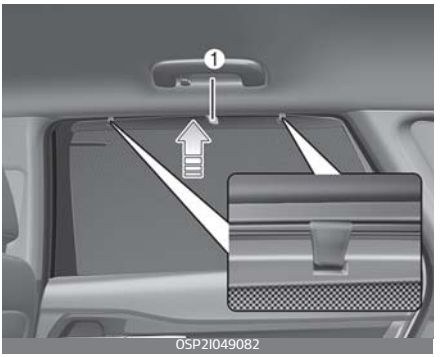

To use the side curtain:

1. Lift the curtain by the handle (1).
2. Hang the curtain on both sides of the hook.
   If the curtain is hung on one side, the curtain may be wrinkled.

⚠ CAUTION

- Do not hang any other object except the side curtain on the hooks.
- If you pull the door curtain or apply force to return the curtain to its original position after use, you may find the curtain wrinkled or out of shape. To lower the door curtain, be sure to put the handle downward and slowly return the curtain to its original position.
- Curtains may not work properly if foreign objects (coins, toys, cookies, etc.) are stuck in the door. Be careful that the foreign objects do not get into the door.

Exterior features

Roof rack (if equipped)

If the vehicle has a roof rack, you can load cargo on top of your vehicle.

Crossbars and fixing components needed to install the roof rack on your vehicle may be obtained from an authorized Kia dealer/service partner or other qualified shop.

✻ NOTICE

- The crossbars (if equipped) should be placed in the proper load carrying positions prior to placing items onto the roof rack.
- If the vehicle is equipped with a sunroof, be sure not to position cargo onto the roof rack in such a way that it could interfere with sunroof operation.
- When the roof rack is not being used to carry cargo, the crossbars

may need to be repositioned if wind noise is detected.

⚠ CAUTION

- When carrying cargo on the roof rack, take the necessary precautions to make sure the cargo does not damage the roof of the vehicle.
- When carrying large objects on the roof rack, make sure they do not exceed the overall roof length or width.
- When you are carrying cargo on the roof rack, do not operate the sunroof. (if equipped)

⚠ WARNING

- The following specification is the maximum weight that can be loaded onto the roof rack. Distribute the load as evenly as possible across the crossbars (if equipped) and roof rack and secure the load firmly.

ROOF RACK	70 kg EVENLY DISTRIBUTED

Loading cargo or luggage in excess of the specified weight limit on the roof rack may damage your vehicle.

- The vehicle center of gravity will be higher when items are loaded onto the roof rack. Avoid sudden starts, braking, sharp turns, abrupt maneuvers or high speeds that may result in loss of vehicle control or rollover resulting in an accident.
- Always drive slowly and turn corners carefully when carrying items on the roof rack. Severe wind updrafts, caused by passing vehicles or natural causes, can cause sudden upward pressure on items loaded on the roof rack. This is especially true when carrying large, flat items such as wood panels or mattresses. This could cause the items to fall off the roof rack and cause damage to your vehicle or others around you.
- To prevent damage or loss of cargo while driving, check frequently before or while driving to make sure the items on the roof rack are securely fastened.

Infotainment system 5

Audio system **5-3**
• Antenna 5-3
• USB port 5-3
• How vehicle radio works 5-4
Audio (Without Touch Screen) **5-7**
• System layout – control panel 5-7
• System layout – steering wheel remote control 5-9
• Turning the system on or off 5-11
• Turning the display on or off 5-12
• Getting to know the basic operations 5-12
• Adjusting the settings 5-13
Radio **5-13**
• Turning on the radio 5-13
• Changing the radio mode 5-14
• Scanning for available radio stations 5-15
• Searching for radio stations 5-15
• Saving radio stations 5-15
• Listening to saved radio stations 5-16
• FM/AM Mode 5-16
Media Player **5-16**
• Using the media player 5-16
• Using the USB mode 5-17
Bluetooth **5-21**
• Connecting Bluetooth devices 5-21
• Using a Bluetooth audio device 5-24
• Using a Bluetooth phone 5-26
System status icons **5-31**
Infotainment system specifications **5-32**

5 Infotainment system

• USB.....5-32
• Bluetooth 5-33
Trademarks.....5-34

INFOTAINMENT SYSTEM

Audio system

✻ NOTICE

If you install an aftermarket HID head lamp, your vehicle's audio and electronic device may malfunction.

Antenna

Shark fin antenna

The shark fin antenna will receive the transmitted data.

USB port

You can use an USB port to plug in an USB.

How vehicle radio works

FM reception

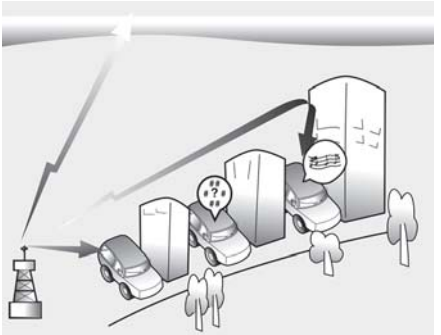

AM and FM radio signals are broadcast from transmitter towers located around your city. They are intercepted by the radio antenna on your vehicle. This signal is then processed by the radio and sent to your vehicle speakers.

However, in some cases the signal coming to your vehicle may not be strong and clear.

This can be due to factors, such as the distance from the radio station, closeness of other strong radio stations or the presence of buildings, bridges or other large obstructions in the area.

AM reception

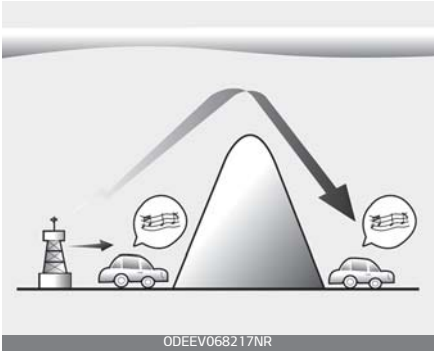

AM broadcasts can be received at greater distances than FM broadcasts. This is because AM radio waves are transmitted at low frequencies. These long distance, low frequency radio waves can follow the curvature of the earth rather than traveling straight. In addition, they curve around obstructions resulting in better signal coverage.

FM radio station

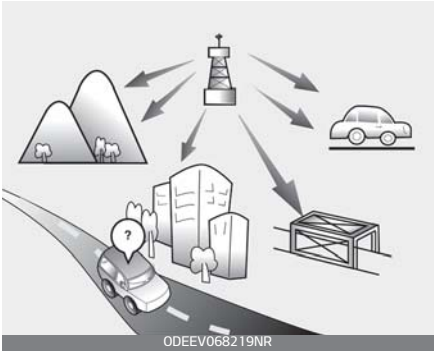

FM broadcasts are transmitted at high frequencies and do not bend to follow the earth's surface. Because of this, FM broadcasts generally begin to fade within short distances from the station. Also, FM signals are easily affected by buildings, mountains, and obstructions. This can lead to undesirable or unpleasant listening conditions which might lead you to believe a problem exists with your radio.

The following conditions are normal and do not indicate radio trouble:

- Fading – As your vehicle moves away from the radio station, the signal will weaken and sound will begin to fade. When this occurs, we suggest that you select another station with a stronger signal.

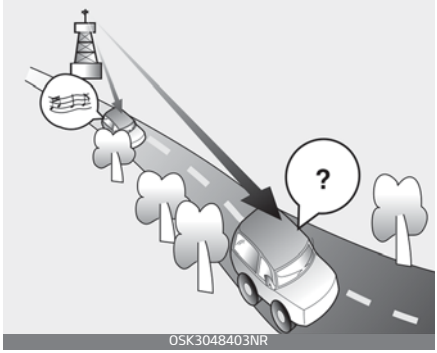

OSK3048403NR

- Flutter/Static – Weak FM signals or large obstructions between the transmitter and your radio can disturb the signal causing static or fluttering noises to occur. Reducing the treble level may lessen this effect until the disturbance clears.
- Station Swapping – As an FM signal weakens, another more powerful signal near the same frequency may begin to play. This is because your radio is designed to lock onto the clearest signal. If this occurs, select another station with a stronger signal.

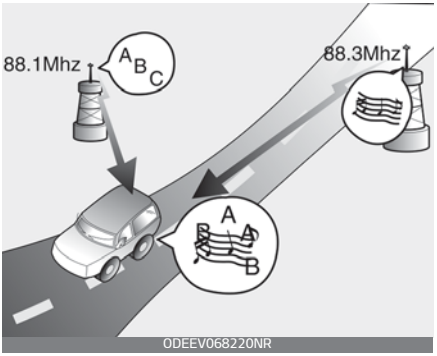

ODEEV068220NR

- Multi-Path Cancellation – Radio signals being received from several directions can cause distortion or fluttering. This can be caused by a direct and reflected signal from the same station, or by signals from two stations with close frequencies. If this occurs, select another station until the condition has passed.

Using a cellular phone or a two-way radio

When a cellular phone is used inside the vehicle, noise may be produced from the audio system. This does not mean that something is wrong with the audio equipment. In such a case, try to operate mobile devices as far from the audio equipment as possible.

⚠ CAUTION

When using a communication system such as a cellular phone or a radio set inside the vehicle, a separate external antenna must be fitted. When a cellular phone or a radio set is used with only the internal antenna, it may interfere with the vehicle's electrical system and adversely affect the safe operation of the vehicle.

⚠ WARNING

Cell phone use

Do not use a cellular phone while driving. Stop at a safe location to use a cellular phone.

Audio (Without Touch Screen)

System layout – control panel

With Bluetooth® Wireless Technology

* The system's actual appearance and layout may differ depending on the car model and specification.

1. SEEK/TRACK button

- Change the station/track/file.
- While listening to the radio, press and hold to search for a station.
- While playing media, press and hold to rewind or fast forward (except for the Bluetooth audio mode).

2. MENU button/CLOCK button

- Press to access the menu screen for the current mode.
- Press and hold to access the time setup screen.

3. TUNE knob/FILE knob/ENTER button

- While listening to the radio, turn to adjust the frequency.
- While playing media, turn to search for a track/file (except for the Bluetooth audio mode).
- While searching by turning the knob, press to select the current track/file (except for the Bluetooth audio mode).

With Bluetooth® Wireless Technology

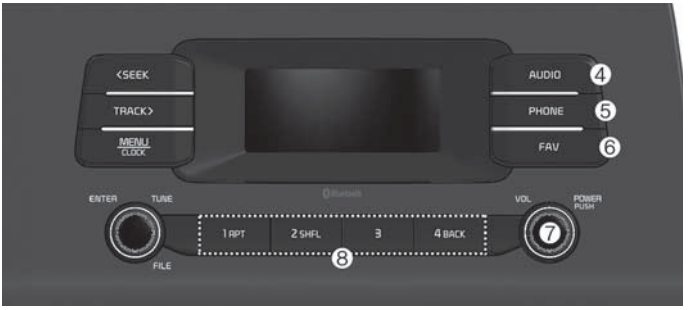

* The system's actual appearance and layout may differ depending on the car model and specification.

4. AUDIO button

- Press to display the radio/ media mode selection window.
- When the mode selection window displays, turn the [**TUNE**] knob to select the desired mode and then press the knob.
- When the Mode popup is not selected in [**MENU/CLOCK**] ▶ **Mode popup**, press the [**AUDIO**] button on the control panel to change the mode. Each time you press the [**AUDIO**] button on the control panel, the mode switches to radio ▶ media in order.

5. PHONE button

- Press to start connecting a mobile phone via Bluetooth.
- After a Bluetooth phone connection is made, press to access the Bluetooth phone menu.

6. FAV button

- While listening to the radio, press to move to next page of the preset list.

7. POWER button/VOL knob

- Press to turn the system on or off.
- Turn to the left or right to adjust the system sound volume.

8. Number buttons (1 RPT~ 4 BACK)

- While listening to the radio, press to listen to a saved radio station.
- While listening to the radio, press and hold to save the current radio station to the preset.
- In the USB/Bluetooth audio modes, press the [**1 RPT**] button to change the repeat mode. Press the [**2 SHFL**] button to change the shuffle mode.
- Press the [**4 BACK**] button to return to the previous screen (except for the radio preset list).

System layout – steering wheel remote control

Bluetooth® equipped model

* The system's actual appearance and layout may differ depending on the vehicle model and specification.

1. MUTE button

- Press to mute or unmute the system.
- During a call, press to mute or unmute the microphone.
- While playing media, press to pause or resume playback. (if equipped)

2. MODE button

- Press to switch between radio and media modes.
- If no media is connected, each time this is pressed, it toggles between the radio modes (FM ▶ AM ▶ FM).
- Press and hold to turn the system on or off.

3. Volume lever

- Push up or down to adjust the volume.

4. Up/Down lever

- Change the station/track/file.
- While listening to the radio, push to listen to the previous/next saved radio station.
- While listening to the radio, push and hold to search for a station.
- While playing media, push and hold to rewind or fast forward (except for the Bluetooth audio mode).
- While playing media push to listen to the previous/next song.

5. Call/Answer button

- Press to start connecting a mobile phone via Bluetooth.
- After a Bluetooth phone connection is made, press to access your call history. Press and hold to dial the most recent phone number. When a call comes in, press to answer the call.
- During a call, press to switch between the active call and the held call. Press and hold to switch the call between the system and the mobile phone.
- In 3-way call, swaps between calls.

6. Call end button

- When a call comes in, reject the call.
- During a call, end the call.

⚠ WARNING

About driving

- Do not operate the system while driving. Driving while distracted may result in a loss of vehicle control, potentially leading to an accident, severe personal injury, or death. The driver's primary responsibility is the safe and legal operation of a vehicle, and any handheld devices, equipment, or vehicle systems which divert the driver's attention from this responsibility should never be used during operation of the vehicle.
- Avoid watching the screen while driving. Driving while distracted may lead to a traffic accident. Stop your vehicle in a safe location before using functions that require multiple operations.
- Stop your vehicle first before using your mobile phone. Using a mobile phone while driving may lead to a traffic accident. If necessary, use the Bluetooth Handsfree feature to make calls and keep the call as short as possible.
- Keep the volume low enough to hear external sounds. Driving without the ability to hear external sounds may lead to a traffic accident. Listening to a loud volume for a long time may cause hearing damage.

⚠ WARNING

About handling the system

- Do not disassemble or modify the system. Doing so may result in an accident, fire, or electric shock.
- Do not allow liquids or foreign substances to enter the system. Liquids or foreign substances may cause noxious fumes, a fire, or a system malfunction.
- Stop using the system if it malfunctions, such as no audio output or display. If you continue using the system when it is malfunctioning, it may lead to a fire, electric shock, or system failure.
- Do not touch the antenna during thunder or lightning because such an act may cause electric shock.

✻ NOTICE

About operating the system

- Use the system with the engine running. Using the system for a long time when the engine is stopped may discharge the battery.
- Do not install unapproved products. Using unapproved products may cause an error while using the system. System errors caused by installing unapproved products are not covered under the warranty.

NOTICE

About handling the system

- Do not apply excessive force to the system. Excessive pressure on the screen may damage the LCD panel or the touch panel.
- When cleaning the screen or button panel, make sure to stop the engine and use a soft, dry cloth. Wiping the screen or buttons with a rough cloth or using solvents (alcohol, benzene, paint thinner, etc.) may scratch or chemically damage the surface.
- If you attach a liquid-type air freshener to the fan louvre, the surface of the louvre may become deformed due to the flowing air.
- If you want to change the position of the installed device, please inquire with your place of purchase or service maintenance centre. Technical expertise is required to install or disassemble the device.

NOTICE

- If you experience any problems with the system, contact your place of purchase or dealer.
- Placing the infotainment system within an electromagnetic environment may result in noise interference.

Turning the system on or off

To turn on the system, start the engine.

- If you do not want to use the system while driving, you can turn off the system by pressing the [**POWER**] button on the control panel. To use the system again, press the [**POWER**] button again.

After you have turned off the engine, the system will automatically turn off after a while or as soon as you open the driver's door.

- Depending on the vehicle model or specifications, the system may turn off as soon as you turn off the engine.
- When you turn back on the system, the previous mode and settings will remain intact.

WARNING

- Some functions may be disabled for safety reasons while the vehicle is moving. They work only when the vehicle stops. Park your vehicle in a safe location before using any of them.
- Stop using the system if it malfunctions, such as no audio output or display. If you continue using the system when it is malfunctioning, it may lead to a fire, electric shock, or system failure.

✻ NOTICE

You can turn on the system when the key ignition switch is placed in the "ACC" or "ON" position. Using the system for an extended period without the engine running drains the battery. If you plan on using the system for a long time, start the engine.

Turning the display on or off

To prevent glare, you can turn off the screen. The screen can be turned off only while the system is on.

1. On the control panel, press the [**MENU/CLOCK**] button.
2. When the option selection window displays, turn the [**TUNE**] knob to select **Display off**, and then press the knob.
   - To turn the screen back on, press any of the control panel buttons.

Getting to know the basic operations

You can select an item or adjust the settings by using the number buttons and the [**TUNE**] knob on the control panel.

Selecting an item

Numbered items

- Press the corresponding number button.

Numberless items

- Turn the [**TUNE**] knob to choose the desired item, and then press the knob to select the item.

Adjusting the settings

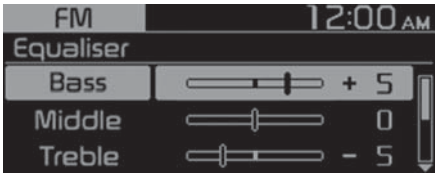

- Turn the [**TUNE**] knob to adjust the value, and then press the knob to save changes.
- Turn the [**TUNE**] knob to the right to increase the value and turn the [**TUNE**] knob to the left to decrease the value.

Radio

Turning on the radio

1. On the control panel, press the [**AUDIO**] button.
2. When the mode selection window displays, turn the [**TUNE**] knob to select the desired radio mode and then press the knob.

FM/AM Mode

1. Current radio mode
2. Radio station information
3. Preset list

Press the [**MENU/CLOCK**] button on the control panel to access the following menu options:

- **Autostore**: Save radio stations to the preset list.
- **Scan**: The system searches for radio stations with strong radio signals and plays each radio station for about five seconds.
- **Sound settings**: You can change the settings related to sounds, such as location where sound will be concentrated and the output level for each range.
  - **Position**: Select a location where sound will be concentrated in the vehicle. Select **Fader** or **Balance**, turn the

5

[**TUNE**] knob to select the desired position, and then press the knob. To set sound to be centred in the vehicle, select **Centre**.
- **Equaliser**: Adjust the output level for each sound tone mode.
- **Sound experience**: Select the location where sound is focused in the vehicle between the driver's seat and all other seats.
- **Speed dependent vol.**: Set the volume to be adjusted automatically according to your driving speed.

NOTICE

- Depending on vehicle models or specifications, available options may vary.
- Depending on the system or amplifier specifications applied to your vehicle, available options may vary.

- **Mode popup**: Set to display mode selection window when the [**AUDIO**] button is pressed on the control panel.
- **Bluetooth remote lock**: Even if Bluetooth remote control application is connected, if Set Lock remote controls is enabled. System cannot be operated via smart phone application.
- **Date/Time**: You can change the date and time that are shown on the system display.
  - **Set date**: Set date to display on the system display.
  - **Set time**: Set time to display on the system display.
  - **Time format**: Select to display time in the 12 hour format or the 24 hour format.
  - **Display** (**Power Off**): Set to display the clock when the system power is off.
- **Language**: You can change the display language.

Changing the radio mode

1. On the control panel, press the [**AUDIO**] button.
2. When the mode selection window displays, turn the [**TUNE**] knob to select the desired radio mode and then press the knob.
   - Each time you press the [**MODE**] button on the steering wheel, the radio mode switches to FM ▶ AM in order.

✻ NOTICE

When the **Mode popup** is not selected in [**MENU/CLOCK**] ▶ **Mode popup**, press the [**AUDIO**] button on the control panel to change the radio mode.

Each time you press the [**AUDIO**] button on the control panel, the radio mode switches to FM ▶ AM in order.

Scanning for available radio stations

You can listen to each radio station for a few seconds to test the reception and select the one you want.

1. From the radio screen, press the [**MENU/CLOCK**] button on the control panel.
2. When the option selection window displays, turn the [**TUNE**] knob to select **Scan**, and then press the knob.
   - The system searches for radio stations with strong radio signals and plays each radio station for about five seconds.
3. When you find the radio station you want to listen to, press the [**TUNE**] knob.
   - You can continue listening to the selected station.

Searching for radio stations

To search for the previous or next available radio station, press the [**< SEEK**] button / [**TRACK >**] button on the control panel.

- You can also press and hold the [**< SEEK**] button / [**TRACK >**] button to search for frequencies quickly. When you release the button, a radio station with a strong signal is selected automatically.

If you know the exact frequency of the radio station you want to listen to, turn the [**TUNE**] knob on the control panel to change the frequency.

Saving radio stations

You can save your favourite radio stations and listen to them by selecting them from the preset list.

Saving the current radio station

While listening to the radio, press and hold the desired number button on the control panel.

- The radio station you are listening to will be added to the selected number.
- To save the next page of the preset list, press the [**FAV**] button.

✻ NOTICE

- You can save up to 12 radio stations in each mode.
- If a station is already saved to the selected preset number, the station will be replaced by the station you are listening to.

Using the auto save function

You can search for radio stations in your area where there is a strong signal. The results of your search can be saved to the preset list automatically.

1. From the radio screen, press the [**MENU/CLOCK**] button on the control panel.
2. When the option selection window displays, turn the [**TUNE**] knob to select **Autostore**, and then press the knob.

Listening to saved radio stations

FM/AM Mode

1. Confirm the preset number for the radio station you want to listen to.
   - To view the next page of the preset list, press the [**FAV**] button.
2. On the control panel, press the desired number button.
   - Alternatively, Push the Up/Down lever on the steering wheel to change the station.

Media Player

Using the media player

You can play music stored in various media storage devices, such as USB storage devices, smartphones.

1. Connect a device to the USB port in your vehicle.
   - Playback may start immediately depending on the device that you connect to the system.
2. On the control panel, press the [**AUDIO**] button.
3. When the mode selection window displays, turn the [**TUNE**] knob to select the desired mode and then press the knob.

✻ NOTICE

- To start the media player, press the [**AUDIO**] button on the control panel.
- You can also change the mode by press the [**MODE**] button repeatedly on the steering wheel.
- Make sure to connect or disconnect external USB devices with the system power turned off.
- When the **Mode popup** is not selected in [**MENU/CLOCK**] ▶ Mode popup, press the [**AUDIO**] button on the control panel to change the media player.
  Each time you press the [**AUDIO**] button on the control panel, the media mode switches to USB ▶ Bluetooth audio in order.

- Depending on vehicle models and specifications, available buttons or the appearance and layout of the USB port in your vehicle may vary.
- Do not connect a smartphone or an MP3 device to the system via multiple methods such as USB and Bluetooth simultaneously. Doing so may cause a distorted noise or a system malfunction.
- When the equaliser function of the connected device and Equaliser settings of the system are both activated, the effects may interfere with each other and may lead to sound degradation or distortion. Deactivate the device's equaliser function if possible.

Using the USB mode

You can play media files stored in portable devices, such as USB storage devices and MP3 players. Check compatible USB storage devices and file specifications before using the USB mode.

Connect your USB device to the USB port in the vehicle.

- Playback starts immediately.
- Press the [**AUDIO**] button on the control panel to display the mode selection window, turn the [**TUNE**] knob to select **USB** and then press the knob.

1. Current file number and total number of files
2. Playback time
3. Information about the song currently playing

Press the [**MENU/CLOCK**] button on the control panel to access the following menu options:

- **List**: Access the file list.
- **Folder list**: Access the folder list.
- **Information**: Display information about the song currently playing.
- **Sound settings**: You can change the settings related to sounds, such as location where sound will be concentrated and the output level for each range.
  - **Position**: Select a location where sound will be concentrated in the vehicle. Select **Fader** or **Balance**, turn the [**TUNE**] knob to select the desired position, and then press the knob. To set sound to be centred in the vehicle, select **Centre**.
  - **Equaliser**: Adjust the output level for each sound tone mode.

5

- **Sound experience**: Select the location where sound is focused in the vehicle between the driver's seat and all other seats.
- **Speed dependent vol.**: Set the volume to be adjusted automatically according to your driving speed.

NOTICE

- Depending on vehicle models or specifications, available options may vary.
- Depending on the system or amplifier specifications applied to your vehicle, available options may vary.

- **Song information**: Select information such as **Folder/File** or **Artist/Title/Album** to display when playing MP3 files.
- **Mode popup**: Set to display mode selection window when the [**AUDIO**] button is pressed on the control panel.
- **Bluetooth remote lock**: Even if Bluetooth remote control application is connected, if Set Lock remote controls is enabled. System cannot be operated via smart phone application.
- **Date/Time**: You can change the date and time that are shown on the system display.
  - **Set date**: Set date to display on the system display.
  - **Set time**: Set time to display on the system display.
  - **Time format**: Select to display time in the 12 hour format or the 24 hour format.
  - **Display** (**Power Off**): Set to display the clock when the system power is off.
- **Language**: You can change the display language.

Rewinding/Fast forwarding

- On the control panel, press and hold the [**< SEEK**] button / [**TRACK >**] button. to rewind/fast forward of playing track
  - You can also push and hold the Up/down lever on the steering wheel.

Restarting the current playback

- On the control panel after the song has played for 2 seconds, press the [**< SEEK**] button.
  - You can also push the Up lever on the steering wheel.

Playing the previous or next song

- To play the previous song on the control panel within the first 2 seconds of the current song, press the [**< SEEK**] button. To play the next song, press the [**TRACK >**] button on the control panel.
  - If more than 2 seconds of playback have elapsed, press the [**< SEEK**] button on the control panel twice to play the previous song.
  - You can also push the Up/down lever on the steering wheel.

✻ NOTICE

Press the [**MENU/CLOCK**] button on the control panel to display the mode selection window, turn the [**TUNE**] knob to find the desired song and press the knob to play the file.

Playing repeatedly

- On the control panel, press the [**1 RPT**] button. The corresponding mode icon will be displayed on the screen and the playing song will be repeated.

Playing in random order

- On the control panel, press the [**2 SHFL**] button. The shuffle mode is activated or deactivated each time you press it. When you activate the shuffle mode, the corresponding mode icon will be displayed on the screen. When shuffle is active, the available songs will be played randomly.

✻ NOTICE

Depending on the connected Bluetooth device or mobile phone, RPT & SHFL features may not be supported.

Searching folders

1. On the control panel, press the [**MENU/CLOCK**] button.
2. When the option selection window displays, turn the [**TUNE**] knob to select the **Folder list** and then press the knob.
3. Navigate to the desired folder in the **Folder list** and then press the [**TUNE**] knob.
   - The first song in the selected folder will be played.

✻ NOTICE

- Start the engine of your vehicle before connecting a USB device to your system. Starting the engine with a USB device connected to the system may damage the USB device.
- Be careful of static electricity when connecting or disconnecting a USB device. A static discharge may cause a system malfunction.
- Be careful not to let your body or external objects contact the USB port. Doing so may cause an accident or a system malfunction.
- Do not connect and disconnect a USB connector repeatedly in a short time. Doing so may cause an error in the device or a system malfunction.
- Do not use a USB device for purposes other than playing files. Using USB accessories for charging or heating may cause poor performance or a system malfunction.

✻ NOTICE

- When connecting a USB storage device, do not use an extension cable. Connect it directly to the USB port. If you use a USB hub or an extension cable, the device may not be recognized.
- Fully insert a USB connector into the USB port. Failure to do so may cause a communication error.
- When you disconnect a USB storage device, a distorted noise may occur.
- The system can play only files encoded in a standard format.
- The following types of USB devices may not be recognised or work correctly:
  - Encrypted MP3 players
  - USB devices not recognised as removable disks
- A USB device may not be recognised depending on its condition.
- Some USB devices may be incompatible with your system.
- Depending on the USB device's type, capacity, or the format of files, USB recognition time may be longer.
- Image and video playback are not supported.

Bluetooth

Connecting Bluetooth devices

Bluetooth is a short-range wireless networking technology. Via Bluetooth, you can connect nearby mobile devices wirelessly to send and receive data between connected devices. This enables you to use your devices effectively.

To use Bluetooth, you must first connect a Bluetooth-enabled device to your system, such as a mobile phone or an MP3 player. Ensure that the device you want to connect supports Bluetooth.

⚠ WARNING

Park your vehicle in a safe location before connecting Bluetooth devices. Distracted driving can cause a traffic accident and lead to personal injury or death.

✻ NOTICE

- On your system, you can use only Bluetooth Handsfree and Audio features. Connect a mobile device that supports both features.
- Some Bluetooth devices may cause malfunctions to the Infotainment system or make interference noises. In this case, storing the device in a different location may resolve the problem.
- Depending on the connected Bluetooth device or mobile phone, some functions may not be supported.
- If the system is not stable due to a vehicle-Bluetooth device communication error, delete the paired devices and connect the Bluetooth devices again.
- If Bluetooth connection is not stable, follow these steps to try again.
  1. Deactivate Bluetooth and reactivate it on the device. Then, reconnect the device.
  2. Turn the device off and on. Then, reconnect it.
  3. Remove the battery from the device and reinstall it. Then, turn the device on and reconnect it.
  4. Unregister the Bluetooth pairing on both the system and the device and then re-register and connect them.
- The Bluetooth connection is unavailable when the device's Bluetooth function is turned off. Be sure to turn on the device's Bluetooth function.

Pairing devices with your system

For Bluetooth connections, first pair your device with your system to add it to the system's list of Bluetooth devices. You can register up to five devices.

1. From the control panel, press the [**PHONE**] button, and then select **Phone settings ▶ Add new device**.
   - If you are pairing a device with your system for the first time or if there are no connected devices you can press the Call/ Answer button on the steering wheel to initiate pairing.
2. On the Bluetooth device you want to connect, activate Bluetooth, search for your vehicle's system, and then select it.
   - Check the system's Bluetooth name, which is displayed in the new registration pop-up window on the system screen.

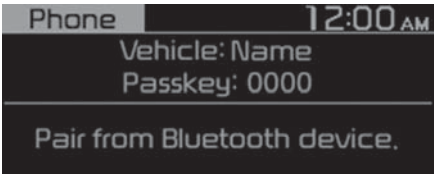

3. Enter or confirm the passkey to confirm the connection.
   - If the passkey input screen is displayed on the Bluetooth device screen, enter the passkey '0000' which is displayed on the system screen.
   - If the 6-digit passkey is displayed on the Bluetooth device screen, ensure that the Bluetooth passkey displayed on the Bluetooth device is the same as the passkey on the system screen and confirm the connection from the device.

✻ NOTICE

- The screen image in this manual is an example. Check your system screen for the exact vehicle name and Bluetooth device name.
- The default passkey is '0000'.
- It may take a while for the system to connect with the device after you permit the system to access the device. When a connection is made, the Bluetooth status icon appears at the top of the screen.
- You can change the permission settings via the mobile phone's Bluetooth settings menu. For more information, refer to your mobile phone's user guide.
- To register a new device, repeat steps 1 to 3.
- If you use the automatic Bluetooth connection function, a call may be switched to the vehicle's Handsfree when you are taking on the phone near the vehicle while the vehicle's engine is on. If you do not want the system to connect with the device automatically,

deactivate Bluetooth on your device.
- When a device is connected to the system via Bluetooth, the device's battery may discharge faster.

Connecting a paired device

To use a Bluetooth device on your system, connect the paired device to the system. Your system can connect with only one device at a time.

1. From the control panel, press the [**PHONE**] button, and then select **Phone settings ▶ Paired devices**.
   - If there is no connected device, you can press the Call/Answer button on the steering wheel to start pairing.
2. Turn the [**TUNE**] knob to select the device to connect, and then press the knob.
   - If another device is already connected to your system, disconnect it. Select the connected device to disconnect.

NOTICE

- If a connection ends because a device is out of the connection range or a device error occurs, the connection will be restored automatically when the device enters the connection range or when the error is cleared.
- Depending on auto connection priority, connection to a device may take time.

Disconnecting a device

If you want to stop using a Bluetooth device or connect another device, disconnect your currently connected device.

1. From the control panel, press the [**PHONE**] button, and then select **Phone settings ▶ Paired devices**.
2. Turn the [**TUNE**] knob to select your currently connected device and then press the knob.
3. Press the [**1 RPT**] button to select **Yes**.

Deleting paired devices

If you no longer want a Bluetooth device paired or if you want to connect a new device when the Bluetooth device list is full, delete paired devices.

1. From the control panel, press the [**PHONE**] button, and then select **Phone settings ▶ Delete devices**.
2. Turn the [**TUNE**] knob to select the device to delete, and then press the knob.
3. Press the [**1 RPT**] button to select **Yes**.

✻ NOTICE

- When you delete a paired device, the Call history and Contacts stored in the system are also deleted.
- To re-use a deleted device, you must pair the device again.

Using a Bluetooth audio device

You can listen to music stored in the connected Bluetooth audio device via your vehicle's speakers.

1. On the control panel, press the [**AUDIO**] button.
2. When the mode selection window displays, turn the [**TUNE**] knob to select **Bluetooth audio** and then press the knob.

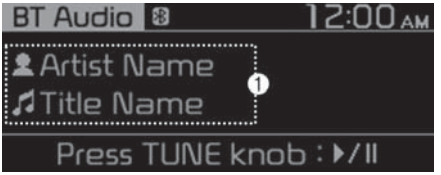

1. Information about the song currently playing

1. Press the [**MENU/CLOCK**] button on the control panel to access the following a menu option.
2. Turn the [**TUNE**] knob to select option and then press the knob.

- **Sound settings**: You can change the settings related to sounds, such as location where sound will be concentrated and the output level for each range.
  - **Position**: Select a location where sound will be concentrated in the vehicle. Select **Fader** or **Balance**, turn the [**TUNE**] knob to select the desired position, and then press the knob. To set sound to be centred in the vehicle, select **Centre**.
  - **Equaliser**: Adjust the output level for each sound tone mode.
  - **Sound experience**: Select the location where sound is focused in the vehicle between the driver's seat and all other seats.
  - **Speed dependent vol.**: Set the volume to be adjusted automatically according to your driving speed.

✻ NOTICE

- Depending on vehicle models or specifications, available options may vary.
- Depending on the system or amplifier specifications applied to your vehicle, available options may vary.

- **Mode popup**: Set to display mode selection window when the [**AUDIO**] button is pressed on the control panel.
- **Bluetooth remote lock**: Even if Bluetooth remote control application is connected, if Set Lock remote controls is enabled. Sys-

tem cannot be operated via smart phone application.

- **Date/Time**: You can change the date and time that are shown on the system display.
  - **Set date**: Set date to display on the system display.
  - **Set time**: Set time to display on the system display.
  - **Time format**: Select to display time in the 12 hour format or the 24 hour format.
  - **Display** (**Power Off**): Set to display the clock when the system power is off.
- **Language**: You can change the display language.

Pausing/Resuming playback

- To pause playback, press the [**TUNE**] knob on the control panel. To resume playback, press the [**TUNE**] knob again.
  - You can also press the Mute button on the steering wheel remote control.

Playing repeatedly

- On the control panel, press the [**1 RPT**] button. The corresponding mode icon will be displayed on the screen and the playing song will be repeated.

Playing in random order

- On the control panel, press the [**2 SHFL**] button. The shuffle mode is activated or deactivated each time you press it. When you activate the shuffle mode, the corresponding mode icon will be displayed on the screen. When shuffle is active, the available songs will be played randomly.

NOTICE

Depending on the connected Bluetooth device or mobile phone, RPT & SHFL features may not be supported.

NOTICE

- Depending on the connected Bluetooth device, mobile phone, or the music player you are using, playback controls may differ.
- Depending on the music player you are using, streaming may not be supported.
- Depending on the connected Bluetooth device or mobile phone, some functions may not be supported.
- If a Bluetooth enabled phone is being used to play music and it receives or makes a phone call, the music will stop.
- Receiving an incoming call or making an outgoing call while playing Bluetooth audio may result in audio interference.

- If you use the Bluetooth phone mode while using Bluetooth audio, playback may not automatically resume after you end the call depending on the connected mobile phone.
- Moving the track up/down while playing Bluetooth audio mode may result in pop noises with some mobile phones.
- The Rewinding/Fast forwarding function is not supported in the Bluetooth audio mode.
- The playlist feature is not supported in the Bluetooth audio mode.
- If the Bluetooth device is disconnected, Bluetooth audio mode will end.

Using a Bluetooth phone

You can use Bluetooth to talk on the phone hands free. View call information on the system screen, and make or receive calls safely and conveniently via the vehicle's built-in microphone and speakers.

⚠ WARNING

- Park your vehicle in a safe location before connecting Bluetooth devices. Distracted driving can cause a traffic accident and lead to personal injury or death.
- Never dial a phone number or pick up your mobile phone while driving. Use of a mobile phone may distract your attention, making it difficult to recognize external conditions and reducing the ability to cope with unexpected situations, which may lead to an accident. If necessary, use the Bluetooth Handsfree feature to make calls and keep the call as short as possible.

✻ NOTICE

- You cannot access the Phone screen if there is no connected mobile phone. To use the Bluetooth phone function, connect a mobile phone to the system.
- The Bluetooth Handsfree function may not work when you are passing out of the cellular service coverage area, such as when you are in a tunnel, underground, or in a mountainous area.
- Call quality may be degraded in the following environments:
  - The reception of the mobile phone is poor.
  - The inside of the vehicle is noisy.
  - The mobile phone is placed near metallic objects, such as a beverage can.
- Depending on the connected mobile phone, the volume and sound quality of the Bluetooth Handsfree may vary.

Making a call

If your mobile phone is connected to the system, you can make a call by selecting a name from your call history or contacts list.

1. On the control panel, press the [**PHONE**] button.
   - Alternatively, press the Call/Answer button on the steering wheel.
2. Select a phone number.
   - To select a phone number from your favourites list, select **Favourites**.
   - To select a phone number from your call history, select **Call history**.
   - To select a phone number from the contacts list downloaded from the connected mobile phone, select **Contacts**.
3. To end the call, press the [**2 SHFL**] button on the control panel.
   - Alternatively, press the Call end button on the steering wheel.

Registering the favourites list

You can more easily use Bluetooth to talk on the phone hands-free by registering phone numbers as your favourites.

1. On the Phone screen, turn the [**TUNE**] knob on the control panel to select **Favourites** and press the knob.
2. Select [**MENU/CLOCK**] ▶ **Add new favourites**.
3. Press the [**1 RPT**] button, and select the desired phone number.

Using the favourites list

1. From the Phone screen, turn the [**TUNE**] knob on the control panel to select **Favourites**, and then press the knob.
2. Turn the [**TUNE**] knob to select the desired contact, and then press the knob to make a phone call.

Press the [**MENU/CLOCK**] button on the control panel to access the following menu options:

- **Add new favourites**: Add a frequently used phone number to favourites.
- **Delete items**: Delete a selected favourites item.
- **Delete all**: Delete all favourites items.

NOTICE

- You can register up to 20 favourites for each device.
- You must first download the contacts to the system to register favourites.
- The favourites list saved on the mobile phone is not downloaded to the system.

5

- Even if the contact information on the mobile phone is edited, the favourites on the system are not automatically edited. Delete and add the item to favourites again.
- When you connect a new mobile phone, your favourites set for the previous mobile phone will not be displayed, but they will remain in your system until you delete the previous phone from the device list.

Using your call history

1. From the Phone screen, turn the [**TUNE**] knob on the control panel to select **Call history**, and then press the knob.
2. Turn the [**TUNE**] knob to select the desired entry, and then press the knob to make a phone call.

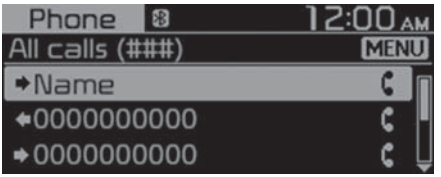

Press the [**MENU/CLOCK**] button on the control panel to access the following menu options:

- **Download**: Download your call history.
- **All calls**: View all call records.
- **Dialled calls**: View only dialled calls.
- **Received calls**: View only received calls.
- **Missed calls**: View only missed calls.

NOTICE

- Some mobile phones may not support the download function.
- The call history is accessed only after downloading the call history when the mobile phone is connected to the system.
- Calls from restricted IDs are not saved on the call history list.
- Up to 50 call records will be downloaded per individual list.
- Call duration and time information will not be displayed on the system screen.
- Permission is required to download your call history from the mobile phone. When you attempt to download data, you may need to permit the download on the mobile phone. If the download fails, check the mobile phone screen for any notification or the mobile phone's permission setting.
- When you download your call history, any old data will be deleted.

Using the contacts list

1. From the Phone screen, turn the [**TUNE**] knob on the control panel to select Contacts, and then press the knob.
2. Turn the [**TUNE**] knob to select the desired group of alphanumeric characters, and then press the knob.
3. Turn the [**TUNE**] knob to select the desired contact, and then press the knob to make a phone call.

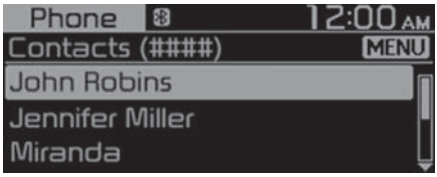

Press the [**MENU/CLOCK**] button on the control panel to access the following a menu option:

- **Download**: Download your mobile phone contacts.

NOTICE

- Contacts can be viewed only when the Bluetooth device is connected.
- Only contacts in the supported format can be downloaded and displayed from the Bluetooth device. Contacts from some applications will not be included.
- Up to 2,000 contacts can be downloaded from your device.
- Some mobile phones may not support the download function.
- Depending on the system's specifications, some of the downloaded contacts may be lost.
- Contacts stored both in the phone and in the SIM card are downloaded. With some mobile phones, contacts in the SIM card may not be downloaded.
- Special characters and figures used in the contact name may not be displayed properly.
- Permission is required to download contacts from the mobile phone. When you attempt to download data, you may need to permit the download on the mobile phone. If the download fails, check the mobile phone screen for any notification or the mobile phone's permission setting.
- Depending on the mobile phone type or status, downloading may take longer.
- When you download your contacts, any old data will be deleted.
- You cannot edit or delete your contacts on the system.
- When you connect a new mobile phone, your contacts downloaded from the previous mobile phone will not be displayed, but they will remain in your system until you delete the previous phone from the device list.

Answering calls

When a call comes in, a notification pop-up window of the incoming call appears on the system screen.

- To answer the call, press the [**1 RPT**] button on the control panel.
  - Alternatively, press the Call/Answer button on the steering wheel.
- To reject the call, press the [**2 SHFL**] button on the control panel.
  - Alternatively, press the Call end button on the steering wheel.

NOTICE

- Depending on the mobile phone type, call rejection may not be supported.
- Once your mobile phone is connected to the system, the call sound may be output through the vehicle's speakers even after you exit the vehicle if the phone is within the connection range. To end the connection, disconnect the device from the system or deactivate Bluetooth on the device.

Using options during a call

During a call, you will see the call screen shown below. Press a button to perform the function you want.

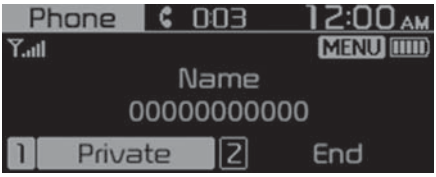

- To switch the call to your mobile phone, press the [**1 RPT**] button on the control panel.
  - Alternatively, press and hold the Call/Answer button on the steering wheel.
- To end the call, press the [**2 SHFL**] button on the control panel.
  - Alternatively, press the Call end button on the steering wheel.

Press the [**MENU/CLOCK**] button on the control panel to access the following a menu option:

- Microphone Volume: Adjust the microphone volume or turn off the microphone so the other party cannot hear you.

NOTICE

- If the caller information is saved in your contacts list, the caller's name and phone number will be displayed. If the caller information is not saved in your contacts list, only the caller's phone number will be displayed.
- You cannot switch to any other screen, such as the audio screen or the settings screen, during a Bluetooth call.
- Depending on the mobile phone type, call quality may vary. On some phones, your voice may be less audible to the other party.
- Depending on the mobile phone type, the phone number may not be displayed.
- Depending on the mobile phone type, the call switching function may not be supported.

System status icons

Status icons appear at the top of the screen to display the current system status.

Familiarise yourself with the status icons that appear when you perform certain actions or functions and their meanings.

Bluetooth

Icon	Description
	Battery level of connected Bluetooth device
	Mobile phone or audio device connected via Bluetooth
	Bluetooth call in progress
	Microphone turned off during Bluetooth call
	Downloading call history from a mobile phone connected via Bluetooth to the system
	Downloading contacts from a mobile phone connected via Bluetooth to the system
	Displayed when Bluetooth remote control is connected via smartphone applications

Signal strength

Icon	Description
	Signal strength of the mobile phone connected via Bluetooth

NOTICE

- The battery level displayed on the screen may differ from the battery level displayed on the connected device.
- The signal strength displayed on the screen may differ from the signal strength displayed on the connected mobile phone.
- Depending on vehicle models and specifications, some status icons may not be displayed.

Infotainment system specifications

USB

Supported audio formats

- Audio file specification
  - WAVeform audio format
  - MPEG1/2/2.5 Audio Layer3
  - Windows Media Audio Ver 7.X/8.X
- Bit rates
  - MPEG1 (Layer3): 32/40/48/56/64/80/96/112/128/160/192/224/256/320 kbps
  - MPEG2 (Layer3): 8/16/24/32/40/48/56/64/80/96/112/128/144/160 kbps
  - MPEG2.5 (Layer3): 8/16/24/32/40/48/56/64/80/96/112/128/144/160 kbps
  - WMA (High Range): 48/64/80/96/128/160/192 kbps
- Bits Per Sample
  - WAV (PCM(Stereo)): 24 bit
  - WAV (IMA ADPCM): 4 bit
  - WAV (MS ADPCM): 4 bit
- Sampling frequency
  - MPEG1: 44100/48000/32000 Hz
  - MPEG2: 22050/24000/16000 Hz
  - MPEG2.5: 11025/12000/8000 Hz
  - WMA: 32000/44100/48000 Hz

  - WAV: 44100/48000 Hz
- Maximum length of folder/file names (Based on Unicode): 40 English or Korean characters
- Supported characters for folder/file names (Unicode support): 2,604 Korean characters, 94 alphanumeric characters, 4,888 Chinese characters in common use, 986 special characters
- Maximum number of folders: 1,000
- Maximum number of files: 5,000

✻ NOTICE

- Files that are not in a supported format may not be recognised or played, or information about them, such as the file name, may not be displayed properly.
- Only files with .mp3/.wma/.wav extensions can be recognised by the system. If the file is not in supported format, change the file format by using the latest encoding software.
- The device will not support files locked by DRM (Digital Rights Management).
- For MP3/WMA compression files and WAV file, differences in sound quality will occur depending on the bitrate. (Music files with a higher bitrate have a better sound quality.)
- Japanese or Simplified Chinese characters in folder or file names may not be displayed properly.

Supported USB storage devices

- Byte/Sector: 64 kbyte or less
- Format system: FAT12/16/32 (recommended), exFAT/NTFS

✻ NOTICE

- Operation is guaranteed only for a metal cover type USB storage device with a plug type connector.
  - USB storage devices with a plastic plug may not be recognised.
  - USB storage devices in memory card types, such as CF card or SD cards, may not be recognised.
- USB hard disk drives may not be recognised.
- When you use a large capacity USB storage device with multiple logical drives, only files stored on the first drive will be recognised.
- If an application program is loaded on a USB storage device, the corresponding media files may not play.
- Use USB 2.0 devices for better compatibility.

Bluetooth

- Aerial power: Max 3 mW

Trademarks

Other trademarks and trade names are those of their respective own¯ ers.

- The Bluetooth® word mark and logos are registered trademarks owned by Bluetooth SIG, Inc. and any use of such marks by KIA is under licence.

Driving your vehicle 6

Be sure the exhaust system does not leak. 6-3

Before driving 6-4

Key positions 6-6

• Ignition switch position..... 6-6
• Starting the engine 6-7
• Stopping the gasoline (petrol) engine/diesel engine (Manual Transmission)..... 6-10

ENGINE START/STOP button 6-10

• Illuminated ENGINE START/STOP button 6-10
• ENGINE START/STOP button position..... 6-10
• Starting the engine 6-13

Manual transmission 6-17

• Manual transmission operation 6-17
• Good driving practices 6-20

Automatic transmission 6-21

• Automatic transmission operation 6-21
• Shift lock system..... 6-25
• Good driving practices 6-26

Dual clutch transmission (DCT) 6-28

• Dual clutch transmission operation 6-28
• DCT warning messages..... 6-29
• Transmission ranges..... 6-31
• Shift lock system..... 6-34
• Good driving practices 6-35

Intelligent variable transmission (IVT) 6-37

• Intelligent Variable Transmission (IVT) operation 6-37
• Shift lock system..... 6-41
• Good driving practices 6-42

6 Driving your vehicle

Brake system **6-43**
• Power brakes 6-43
• Parking brake 6-46
• Anti-lock Brake System (ABS) 6-47
• Electronic Stability Control (ESC) system 6-49
• Vehicle Stability Management (VSM) system 6-53
• Hill-start Assist Control (HAC) 6-54
• Emergency Stop Signal (ESS) 6-55
• Good braking practices 6-55
Drive mode integrated control system (if equipped) **6-57**
• Traction control 6-58
Blind-Spot View Monitor (BVM) **6-61**
• To turn on BVM 6-61
• To turn off BVM 6-61
CRUISE CONTROL (CC) **6-62**
• Cruise Control switch 6-62
• Setting Cruise Control speed 6-63
• Increasing Cruise Control set speed 6-64
• Decreasing the cruising speed 6-64
• Accelerating temporarily with Cruise Control on 6-64
• Cancelling Cruise Control 6-64
• Resuming cruising speed at more than approximately 30 km/h 6-65
• Turning Cruise Control off 6-65
Economical operation **6-66**
Special driving conditions **6-68**
Winter driving **6-71**
Vehicle weight **6-76**

DRIVING YOUR VEHICLE

Be sure the exhaust system does not leak.

The exhaust system should be checked whenever the vehicle is raised to change the oil or for any other purpose.

If you hear a change in the sound of the exhaust or if you drive over something that strikes the underneath side of the vehicle, have the exhaust system checked as soon as possible by a professional workshop. Kia recommends to visit an authorized Kia dealer/service partner.

⚠ WARNING

Engine exhaust

Do not inhale exhaust fumes or leave your engine running in a enclosed area for a prolonged time. Exhaust fumes contain carbon monoxide, a colorless, odorless gas that can cause unconsciousness and death by asphyxiation.

⚠ WARNING

Open tailgate

Do not drive with the tailgate open. Poisonous exhaust gases can enter the passenger compartment. If you must drive with the tailgate open proceed as follows:

1. Close all windows.
2. Open side vents.
3. Set the air intake control at "Fresh", the air flow control at "Floor" or "Face" and the fan at the highest speed.

Before driving

Before getting into the vehicle, you should examine the car and its surroundings. After getting into the vehicle, you should check a number of things before driving.

Before entering vehicle

- Be sure that all windows, outside mirror(s), and outside lights are clean.
- Check the condition of the tires.
- Check under the vehicle for any sign of leaks.
- Be sure there are no obstacles behind you if you intend to back up.

Necessary inspections

Fluid levels, such as engine oil, engine coolant, brake fluid, and washer fluid should be checked on a regular basis, at the exact interval depending on the fluid. Further details are provided in "Maintenance" on page 8–5.

⚠ WARNING

Distracted driving

Focus on the road while driving. The driver's primary responsibility is in the safe and legal operation of the vehicle. Use of any handled devices, other equipment or vehicle systems that distract the driver should not be used during vehicle operation.

Before starting

- Close and lock all doors.
- Position the seat so that all controls are easily reached.
- Buckle your seat belt.
- Adjust the inside and outside rearview mirrors.
- Be sure that all lights work.
- Check all gauges.
- Check the operation of warning lights when the ENGINE START/STOP button is turned to the ON position.
- Release the parking brake and make sure the brake warning light is not on.

For safe operation, be sure you are familiar with your vehicle and its equipment.

⚠ WARNING

Fire risk

When you intend to park or stop the vehicle with the engine on, be careful not to depress the accelerator pedal for a long period of time. It may overheat the engine or exhaust system and cause fire.

⚠ WARNING

Check surroundings

Always check the surrounding areas near your vehicle for people, especially children, before putting a vehicle into D (Drive) or R (Reverse).

⚠ WARNING

Loose objects

Securely store items in your vehicle. When you make a sudden stop or turn the steering wheel rapidly, loose objects may drop on the floor and it could interfere with the operation of the foot pedals, possibly causing an accident.

⚠ WARNING

Driving while intoxicated

Do not drive while intoxicated. Drinking and driving is dangerous. Even a small amount of alcohol will affect your reflexes, perceptions and judgment.

Driving while under the influence of drugs is as dangerous as or more dangerous than driving drunk.

⚠ WARNING

Proper footwear

Always wear appropriate shoes when operating your vehicle. Unsuitable shoes (high heels, ski boots, sandals, etc.) may interfere with your ability to use the brake and accelerator pedals.

Key positions

Ignition switch position

OSK3058160NR

LOCK (1)

The steering wheel locks to protect against theft. The ignition key can be removed only in the LOCK position.

ACC (Accessory) (2)

The steering wheel is unlocked and electrical accessories are operative.

✻ NOTICE

If difficulty is experienced turning the ignition switch to the ACC position, turn the key while turning the steering wheel right and left to release the tension.

ON (3)

The warning lights can be checked before the engine is started. This is the normal running position after the engine is started.

Do not leave the ignition switch ON if the engine is not running to prevent battery discharge.

START (4)

Turn the ignition switch to the START position to start the engine. The engine will crank until you release the key; then it returns to the ON position. The brake warning light can be checked in this position.

⚠ WARNING

Ignition switch

- Never turn the ignition switch to LOCK or ACC while the vehicle is moving. This would result in loss of directional control and braking function, which could cause an accident.
- The anti-theft steering column lock is not a substitute for the parking brake. Before leaving the driver's seat, always make sure the shift lever is engaged in 1st gear for the manual transmission, set the parking brake fully and shut the engine off. Unexpected and sudden vehicle movement may occur if these precautions are not taken.

- Never reach for the ignition switch, or any other controls through the steering wheel while the vehicle is in motion. The presence of your hand or arm in this area could cause a loss of vehicle control, an accident and serious bodily injury or death.
- Do not place any movable objects around the driver's seat as they may move while driving, interfere with the driver and lead to an accident.

Starting the engine

⚠ WARNING

- Always wear appropriate shoes when operating your vehicle. Unsuitable shoes (high heels, ski boots, etc.) may interfere with your ability to use the brake and accelerator pedal, and the clutch. (if equipped)
- Do not start the vehicle with the accelerator pedal depressed. The vehicle can move and lead to an accident.
- Wait until the engine rpm is normal. The vehicle may suddenly move if the brake pedal is released when the rpm is high.

Starting the gasoline (petrol) engine

Manual Transmission

1. Make sure the parking brake is applied.
2. Depress the clutch pedal fully and shift the transmission into Neutral. Keep the clutch pedal and brake pedal depressed while turning the ignition switch to the start position.
3. Turn the ignition switch to START and hold it there until the engine starts (a maximum of 10 seconds), then release the key.
   It should be started **without depressing the accelerator pedal.**
4. Do not wait for the engine to warm up while the vehicle remains stationary. Start driving at moderate engine speeds. (Steep accelerating and decelerating should be avoided.)

Automatic transmission / Dual clutch transmission / Intelligent variable transmission

1. Make sure the parking brake is applied.
2. Place the transmission shift lever in P (Park). Depress the brake pedal fully.
   You can also start the engine when the shift lever is in the N (Neutral) position.

3. Turn the ignition switch to START and hold it there until the engine starts (a maximum of 10 seconds), then release the key.
   It should be started **without depressing the accelerator pedal.**
4. Do not wait for the engine to warm up while the vehicle remains stationary. Start driving at moderate engine speeds. (Steep accelerating and decelerating should be avoided.)

Starting the diesel engine

To start the diesel engine when the engine is cold, it has to be pre-heated before starting the engine and then have to be warmed up before starting to drive.

Manual Transmission

1. Make sure the parking brake is applied.
2. Depress the clutch pedal fully and shift the transmission into Neutral. Keep the clutch pedal and brake pedal depressed.
3. Turn the ignition switch to the ON position to pre-heat the engine. Then the glow indicator light will illuminate.

Glow indicator light

4. If the glow indicator light goes out, turn the ignition switch to the START position and hold it there until the engine starts (a maximum of 10 seconds), then release the key.

Automatic Transmission / Dual clutch transmission

1. Make sure the parking brake is applied.
2. Place the transmission shift lever in P (Park). Depress the brake pedal fully.
   You can also start the engine when the shift lever is in the N (Neutral) position.
3. Turn the ignition switch to the ON position to pre-heat the engine. Then the glow indicator light will illuminate.

Glow indicator light

4. If the glow indicator light goes out, turn the ignition switch to the START position and hold it there until the engine starts (a maximum of 10 seconds), then release the key.

NOTICE

- If the engine does not start within 10 seconds after the preheating is completed, turn the ignition key once more to the LOCK position for 10 seconds, and then to the ON position, in order to preheat again.

Starting and stopping the engine for turbocharger intercooler

1. Do not race or accelerate the engine immediately after starting.
   If the engine is cold, idle for several seconds before sufficient lubrication is ensured in the turbocharger unit.
2. After high speed or extended driving, requiring a heavy engine load, idle the engine about 1 minute before turning it off.
   This idle time will allow the turbocharger to cool prior to shutting the engine off.

CAUTION

Do not turn the engine off immediately after it has been subjected to a heavy load. Doing so may cause severe damage to the engine or turbocharger unit.

CAUTION

If the engine stalls while you are in motion, do not attempt to move the shift lever to the P (Park) position. If traffic and road conditions permit, you may put the shift lever in the N (Neutral) position while the vehicle is still moving and turn the ignition switch to the START position in an attempt to restart the engine.

CAUTION

- Do not engage the starter for more than 10 seconds. If the engine stalls or fails to start, wait 5 to 10 seconds before re-engaging the starter. Improper use of the starter may damage it.
- Do not turn the ignition switch to the START position with the engine running. It may damage the starter.

Stopping the gasoline (petrol) engine/diesel engine (Manual Transmission)

1. Make sure the vehicle is completely stopped and keep the clutch pedal and brake pedal depressed.
2. Shift the transmission into Neutral while depressing the clutch pedal and brake pedal.
3. Engage the parking brake while depressing the brake pedal.
4. Turn the ignition key to the LOCK position and remove it.

ENGINE START/STOP button

Illuminated ENGINE START/STOP button

OSP2I059002

The light will go off after about 30 seconds when the door is closed. It will also go off immediately when the theft-alarm system is armed.

ENGINE START/STOP button position

Your vehicle is equipped with four different ignition positions.

OFF

With manual transmission

To turn off the engine (START/RUN position) or vehicle power (ON position), stop the vehicle then press the ENGINE START/STOP button.

With automatic transmission / dual clutch transmission / Intelligent variable transmission

To turn off the engine (START/RUN position) or vehicle power (ON position), press the ENGINE START/STOP button with the shift lever in the P (Park) position. When you press the ENGINE START/STOP button without the shift lever in the P (Park) position, the ENGINE START/STOP button will not change to the OFF position but to the ACC position.

Vehicles equipped with anti-theft steering column lock

The steering wheel locks when the ENGINE START/STOP button is in the OFF position to protect you against theft.
It locks when the door is opened.
If the steering wheel is not locked properly when you open the driver's door, the warning chime will sound. Try locking the steering wheel again. If the problem is not solved, have the system checked by a professional workshop. Kia recommends to visit an authorized Kia dealer/service partner.
In addition, if the ENGINE START/STOP button is in the OFF position after the driver's door is opened, the steering wheel will not lock and the warning chime will sound. In such a situation, close the door. Then the steering wheel will lock and the warning chime will stop.

NOTICE

If the steering wheel doesn't unlock properly, the ENGINE START/STOP button will not work. Press the ENGINE START/STOP button while turning the steering wheel right and left to release the tension.

NOTICE

You are able to turn off the engine (START/RUN) or vehicle power (ON), only when the vehicle is not in motion.

CAUTION

In an emergency situation while the vehicle is in motion, you are able to turn the engine off and to the ACC position by pressing the ENGINE START/STOP button for more than 2 seconds or 3 times successively within 3 seconds.

If the vehicle is still moving, to restart the vehicle:

- Manual transmission – Press the ENGINE START/STOP button with shift lever in neutral and clutch pedal depressed.
- Automatic transmission / Dual clutch transmission / Intelligent variable transmission – Press the ENGINE START/STOP button when vehicle speed is 5 km/h or over.

ACC (Accessory)

OSK3048131NR

With manual transmission

Press the ENGINE START/STOP button when the button is in the OFF position without depressing the clutch pedal.

With automatic transmission / dual clutch transmission / Intelligent variable transmission

Press the ENGINE START/STOP button while it is in the OFF position without depressing the brake pedal. The steering wheel unlocks and electrical accessories are operational.
If the ENGINE START/STOP button is in the ACC position for more than 1 hour, the button is turned off automatically to prevent battery discharge.

ON

With manual transmission

Press the ENGINE START/STOP button when the button is in the ACC position without depressing the clutch pedal.

With automatic transmission / dual clutch transmission / Intelligent variable transmission

Press the ENGINE START/STOP button while it is in the ACC position without depressing the brake pedal. The warning lights can be checked before the engine is started. Do not leave the ENGINE START/STOP button in the ON position for a long time. The battery may discharge, because the engine is not running.

START/RUN

With manual transmission

To start the engine, depress the clutch pedal and brake pedal, then press the ENGINE START/STOP button with the shift lever in the N (Neutral) position.

With automatic transmission / dual clutch transmission / Intelligent variable transmission

To start the engine, depress the brake pedal and press the ENGINE START/STOP button with the shift lever in the P (Park) or the N (Neutral) position. For your safety, start the engine with the shift lever in the P (Park) position.

NOTICE

If you press the ENGINE START/STOP button without depressing the clutch pedal for manual transmission vehicles or without depressing the brake pedal for automatic transmission / dual clutch transmission / Intelligent variable transmission vehicles, the engine will not start and the ENGINE START/STOP button changes as follow:

OFF → ACC → ON → OFF or ACC

NOTICE

If you leave the ENGINE START/STOP button in the ACC or ON position for a long time, the battery will discharge.

WARNING

- Never press the ENGINE START/STOP button while the vehicle is in motion. This would result in loss of directional control and braking function, which could cause an accident and severe damage to the intelligent variable transmission.
- The anti-theft steering column lock is not a substitute for the parking brake. Before leaving the driver's seat, always make sure the shift lever is engaged in P (Park), set the parking brake fully and shut the engine off. Unexpected and sudden vehicle movement may occur if these precautions are not taken.
- Never reach for the engine start / stop button or any other controls through the steering wheel while the vehicle is in motion. The presence of your hand or arm in the area could cause loss of vehicle control, an accident and serious bodily injury or death.
- Do not place any movable objects around the driver's seat as they may move while driving, interfere with the driver and lead to an accident.

Starting the engine

WARNING

- Do not start the vehicle with the accelerator pedal engaged. The vehicle can move and lead to an accident.
- Wait until the engine rpm is normal. The vehicle may suddenly move if the brake pedal is released when the rpm is high.

Starting the engine with smart key

At the time that the vehicle doors are opened or when the ENGINE START/STOP button is pressed the vehicle will check for the smart key.

If the smart key is not in the vehicle, the "" indicator and a message "Key is not in the vehicle" will appear on the instrument cluster and LCD window. And if all doors are closed, the chime will sound for 5 seconds. The indicator or warning will turn off while the vehicle is moving. Always have the smart key with you.

⚠ WARNING

The engine will start, only when the smart key is in the vehicle. Never allow children or any person who is unfamiliar with the vehicle touch the ENGINE START/STOP button or related parts. Pushing the ENGINE START/STOP button while the smart key is in the vehicle may result in unintended engine activation and/or unintended vehicle movement.

⚠ CAUTION

If the engine stalls while the vehicle is in motion, do not attempt to move the shift lever to the P (Park) position. If the traffic and road conditions permit, you may put the shift lever in the N (Neutral) position while the vehicle is still moving and press the ENGINE START/STOP button in an attempt to restart the engine.

OSP2I050003

NOTICE

- If the battery is weak or the smart key does not work correctly, you can start the engine by pressing the ENGINE START/STOP button with the smart key.
  When you press the ENGINE START/STOP button directly with the smart key, the smart key should contact the button at a right angle.
- When the stop lamp fuse is blown, you cannot start the engine normally.
  Replace the fuse with a new one. If it is not possible, you can start the engine by pressing the engine start/ stop button for 10 seconds while it is in the ACC position. The engine can start without pressing the brake pedal. But for your safety always press the brake pedal before starting the engine.

CAUTION

- Do not press the ENGINE START/STOP button for more than 10 seconds except when the stop lamp fuse is blown.
- Do not turn the ignition switch to the START position with the engine running. It may damage the starter.

Starting the gasoline (petrol) engine

1. Carry the smart key or leave it inside the vehicle.
2. Make sure the parking brake is firmly applied.
3. **Manual Transmission** – Depress the clutch pedal fully and shift the transmission into Neutral. Keep the clutch pedal and brake pedal depressed while starting the engine.
   Automatic transmission / Dual clutch transmission / Intelligent variable transmission – Place the transmission shift lever in P (Park). Depress the brake pedal fully.
   You can also start the engine when the shift lever is in the N (Neutral) position.
4. Press the ENGINE START/STOP button.
   It should be started without depressing the accelerator pedal.
5. Do not wait for the engine to warm up while the vehicle remains stationary. Start driving at moderate engine speeds. (Steep accelerating and decelerating should be avoided.)

Starting the diesel engine

To start the diesel engine when the engine is cold, it has to be pre-heated before starting the engine and then have to be warmed up before starting to drive.

1. Make sure the parking brake is applied.
2. **Manual Transmission** – Depress the clutch pedal fully and shift the transmission into Neutral. Keep the clutch pedal and brake pedal depressed while pressing the ENGINE START/STOP button to the START position.
   Automatic Transmission / Dual clutch transmission – Place the transmission shift lever in P (Park). Depress the brake pedal fully.
   You can also start the engine when the shift lever is in the N (Neutral) position.

Glow indicator light

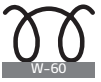

3. Press the ENGINE START/STOP button while depressing the brake pedal.
4. Continue depressing the brake pedal until the illuminated glow indicator goes off. (approximately 5 seconds)
5. The engine starts running when the glow indicator goes off.

⚠ CAUTION

- Recommend to wait for the diesel engine to warm up while the vehicle remains stationary in winter for a while and drive.
- Recommend to use diesel fuel in a high altitude mountain or country where you visit in winter.

✻ NOTICE

If the ENGINE START/STOP button is pressed once more while the engine is pre-heating, the engine may start.

Starting and stopping the engine for turbocharger intercooler

1. Do not race or accelerate the engine immediately after starting.
   If the engine is cold, idle for several seconds before sufficient lubrication is ensured in the turbocharger unit.
2. After high speed or extended driving, requiring a heavy engine load, idle the engine about 1 minute before turning it off.
   This idle time will allow the turbocharger to cool prior to shutting the engine off.

⚠ CAUTION

Do not turn the engine off immediately after it has been subjected to a heavy load. Doing so may cause severe damage to the engine or turbocharger unit.

Stopping the gasoline (petrol) engine/ diesel engine (Manual Transmission)

1. Make sure the vehicle is completely stopped and keep the clutch pedal and brake pedal depressed.
2. Shift the transmission into Neutral while depressing the clutch pedal and brake pedal.
3. Engage the parking brake while depressing the brake pedal.
4. Turn the ignition key to the LOCK position and remove it.

Manual transmission (if equipped)

The manual transmission has 6 forward gears.

Manual transmission operation

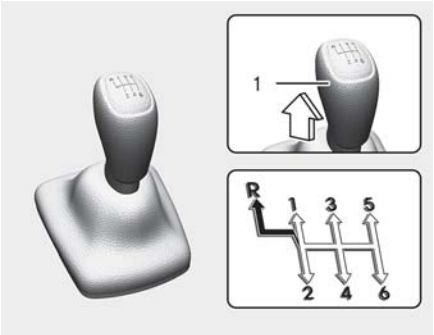

OSP2I059015

⇨ The shift lever can be moved without pulling the button (1).

➡ The button (1) should be pressed when moving the shift lever into reverse.

This shift pattern is imprinted on the shift knob. The transmission is fully synchronized in all forward gears so shifting to either a higher or a lower gear is easily accomplished.

Depress the clutch pedal down fully while shifting, then release it slowly.

If your vehicle is equipped with an ignition lock switch, the engine will not start when starting the engine without depressing the clutch pedal. (if equipped)

The shift lever must be returned to the neutral position before shifting into R (Reverse).

Push the button located immediately below the shift knob and pull the gearshift lever to the left sufficiently, and then shift into reverse (R) gear position.

Make sure the vehicle is completely stopped before shifting into R (Reverse).

Never operate the engine with the tachometer (rpm) in the red zone.

⚠ CAUTION

- When downshifting from fifth gear to fourth gear, caution should be taken not to inadvertently press the shift lever sideways in such a manner that the second gear is engaged. Such a drastic downshift may cause the engine speed to increase to the point that the tachometer will enter the red-zone. Such over-revving of the engine and transmission may possibly cause engine damage.
- Do not downshift more than 2 gears or downshift the gear when the engine is running at high speed (5,000 rpm or higher). Such a downshifting may damage the engine, clutch and the transmission.

- During cold weather, shifting may be difficult until the transmission lubricant is warmed up. This is normal and not harmful to the transmission.
- If you've come to a complete stop and it's hard to shift into 1st or R (Reverse), leave the shift lever at N (Neutral) position and release the clutch. Press the clutch pedal back down, and then shift into 1st or R (Reverse) gear position.

⚠ CAUTION

- To avoid premature clutch wear and damage, do not drive with your foot resting on the clutch pedal. Also, don't use the clutch to hold the vehicle stopped on an uphill grade, while waiting for a traffic light, etc.
- Do not use the shift lever as a handrest during driving, as this can result in premature wear of the transmission shift forks.
- To prevent possible damage to the clutch system, do not start with the 2nd (second) gear engaged except when you start on a slippery road.

⚠ WARNING

- Before leaving the driver's seat, always set the parking brake fully and shut the engine off. Then make sure the transmission is shifted into 1st gear when the vehicle is parked on a level or uphill grade, and shifted into R (Reverse) on a downhill grade. Unexpected and sudden vehicle movement can occur if these precautions are not followed in the order identified.
- Do not use the engine brake (shifting from a high gear to lower gear) rapidly on slippery roads.
  The vehicle may slip causing an accident.

Using the clutch

The clutch should be pressed all the way to the floor before shifting, then released slowly. The clutch pedal should always be fully released while driving. Do not rest your foot on the clutch pedal while driving. This can cause unnecessary wear. Do not partially engage the clutch to hold the vehicle on an incline. This causes unnecessary wear. Use the foot brake or parking brake to hold the vehicle on an incline. Do not operate the clutch pedal rapidly and repeatedly.

⚠ CAUTION

When operating the clutch pedal, press the clutch pedal down fully. If you don't press the clutch pedal fully, the clutch may be damaged or noise may occur.

⚠ WARNING

Using the clutch

Depress the clutch pedal as far as possible. Be aware not to apply the pedal again before it returns to the normal position.

If the pedal is repeatedly depressed before returning to its normal position, the clutch system might be damaged.

Do not overload the vehicle. Starting or driving a vehicle in this situation generates too much frictional heat to the clutch disk which might cause damage to the clutch cover and disk.

When starting the vehicle or driving backwards, releasing the clutch pedal too soon after shifting the lever might turn off the engine and lead to an accident.

Downshifting

When you must slow down in heavy traffic or while driving up steep hills, downshift before the engine starts to labor. Downshifting reduces the chance of stalling and gives better acceleration when you again need to increase your speed. When the vehicle is traveling down steep hills, downshifting helps maintain safe speed and prolongs brake life.

Good driving practices

- Never take the vehicle out of gear and coast down a hill. This is extremely hazardous. Always leave the vehicle in gear.
- Don't "ride" the brakes. This can cause them to overheat and malfunction. Instead, when you are driving down a long hill, shift to a lower gear. When you do this, engine braking will help slow down the vehicle.
- Slow down before shifting to a lower gear. This will help avoid over-revving the engine, which can cause damage.
- Slow down when you encounter cross winds. This gives you much better control of your vehicle.
- Be sure the vehicle is completely stopped before you attempt to shift into reverse. The transmission can be damaged if you do not.
- Exercise extreme caution when driving on a slippery surface. Be especially careful when braking, accelerating or shifting gears. On a slippery surface, an abrupt change in vehicle speed can cause the drive wheels to lose traction and the vehicle to go out of control.

⚠ WARNING

- Always buckle-up! In a collision, an unbelted occupant is significantly more likely to be seriously injured or killed than a properly belted occupant.
- Avoid high speeds when cornering or turning.
- Do not make quick steering wheel movements, such as sharp lane changes or fast, sharp turns.
- The risk of rollover is greatly increased if you lose control of your vehicle at highway speeds.
- Loss of control often occurs if two or more wheels drop off the roadway and the driver oversteers to reenter the roadway.
- In the event your vehicle leaves the roadway, do not steer sharply. Instead, slow down before pulling back into the travel lanes.
- Never exceed posted speed limits.

Automatic transmission (if equipped)

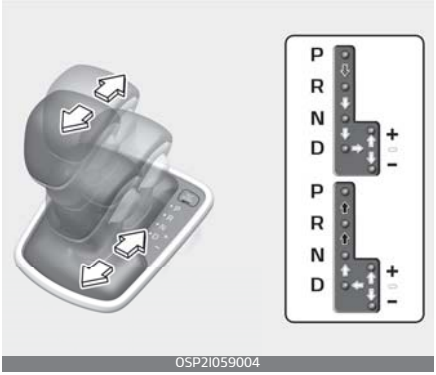

OSP2I059004

Automatic transmission operation

The automatic transmission has 6 forward speeds and one reverse speed. The individual speeds are selected automatically, depending on the position of the shift lever.

NOTICE

The first few shifts on a new vehicle, if the battery has been disconnected, may be somewhat abrupt. This is a normal condition, and the shifting sequence will adjust after shifts are cycled a few times by the TCM (Transmission Control Module) or PCM (Powertrain Control Module).

For smooth operation, depress the brake pedal when shifting from N (Neutral) to a forward or reverse gear.

WARNING

Automatic transmission

- Always check the surrounding areas near your vehicle for people, especially children, before shifting a vehicle into D (Drive) or R (Reverse).
- Before leaving the driver's seat, always make sure the shift lever is in the P (Park) position; then set the parking brake fully and shut the engine off. Unexpected and sudden vehicle movement can occur if these precautions are not followed in the order identified.
- Do not use the engine brake (shifting from a high gear to lower gear) rapidly on slippery roads.
  The vehicle may slip causing an accident.

⚠ CAUTION

- To avoid damage to your transmission, do not accelerate the engine in R (Reverse) or any forward gear position with the brakes on.
- When stopped on an incline, do not hold the vehicle stationary with engine power. Use the service brake or the parking brake.
- Do not shift from N (Neutral) or P (Park) into D (Drive), or R (Reverse) when the engine is above idle speed.

Transmission ranges

The indicator in the instrument cluster displays the shift lever position when the ignition switch is in the ON position.

P (Park)

Always come to a complete stop before shifting into P (Park). This position locks the transmission and prevents the front wheels from rotating.

⚠ WARNING

- Shifting into P (Park) while the vehicle is in motion will cause the drive wheels to lock which will cause you to lose control of the vehicle.
- Do not use the P (Park) position in place of the parking brake. Always make sure the shift lever is latched in the P (Park) position and set the parking brake fully.
- Never leave a child unattended in a vehicle.

⚠ CAUTION

The transmission may be damaged if you shift into P (Park) while the vehicle is in motion.

R (Reverse)

Use this position to drive the vehicle backward.

⚠ CAUTION

Always come to a complete stop before shifting into or out of R (Reverse); you may damage the transmission if you shift into R while the vehicle is in motion, except as explained in "Rocking the vehicle" on page 6-68.

N (Neutral)

The wheels and transmission are not engaged. The vehicle will roll freely even on the slightest incline unless the parking brake or service brakes are applied.

⚠ WARNING

Do not drive with the shift lever in N (Neutral).

The engine brake will not work and lead to an accident.

Parking in N (Neutral) gear

Follow below steps when parking and you want the vehicle to move when pushed.

1. After parking your vehicle, step on the brake pedal and move the shift lever to "P" with the ignition button in "ON" or while the engine is running.
2. If the parking brake is applied unlock the parking brake.
3. While pressing the brake pedal, turn the ignition button "OFF".
   - For smart key equipped vehicles, the ignition switch can be moved to "OFF" only when the shift lever is in "P".
4. Change the gear shift lever to "N" (Neutral) while pressing the brake pedal and pushing "SHIFT LOCK RELEASE" button or inserting, pressing down a tool (e.g., flathead screw-driver) into the "SHIFT LOCK RELEASE" access hole at the same time. Then, the vehicle will move when external force is applied.

⚠ CAUTION

- With the exception of parking in neutral gear, always park the vehicle in "P" (Park) for safety and engage the parking brake.
- Before parking in "N" (Neutral) gear, first make sure the parking ground is level and flat. Do not park in "N" gear on any slopes or gradients.
  If parked and left in "N", the vehicle may move and cause serious damage and injury.

D (Drive)

This is the normal forward driving position. The transmission will automatically shift through a 6-gear sequence, providing the best fuel economy and power.

For extra power when passing another vehicle or climbing grades, depress the accelerator fully, at which time the transmission will automatically downshift to the next lower gear.

✻ NOTICE

Always come to a complete stop before shifting into D (Drive).

Sports mode

Whether the vehicle is stationary or in motion, sports mode is selected by pushing the shift lever from the D (Drive) position into the manual gate. To return to D (Drive) range operation, push the shift lever back into the main gate.
In sports mode, moving the shift lever backwards and forwards will allow you to make gearshifts rapidly. In contrast to a manual transmission, the sports mode allows gearshifts with the accelerator pedal depressed.

- Up (+): Push the lever forward once to shift up one gear.
- Down (–): Pull the lever backwards once to shift down one gear.

NOTICE

- In sports mode, the driver must execute upshifts in accordance with road conditions, taking care to keep the engine speed below the red zone.
- In sports mode, only the 6 forward gears can be selected. To reverse or park the vehicle, move the shift lever to the R (Reverse) or P (Park) position as required.
- In sports mode, downshifts are made automatically when the vehicle slows down. When the vehicle stops, 1st gear is automatically selected.
- In sports mode, when the engine rpm approaches the red zone shift points are varied to upshift automatically.
- To maintain the required levels of vehicle performance and safety, the system may not execute certain gearshifts when the shift lever is operated.
- When driving on a slippery road, push the shift lever forward into the +(up) position. This causes the transmission to shift into the 2nd gear which is better for smooth driving on a slippery road. Push the shift lever to the –(down) side to shift back to the 1st gear.

Shift lock system

For your safety, the automatic transmission has a shift lock system which prevents shifting the transmission from P (Park) into R (Reverse) unless the brake pedal is depressed.

To shift the transmission from P (Park) into R (Reverse):

1. Depress and hold the brake pedal.
2. Start the engine or turn the ignition switch to the ON position.
3. Move the shift lever.

If the brake pedal is repeatedly depressed and released with the shift lever in the P (Park) position, a chattering noise near the shift lever may be heard. This is a normal condition.

⚠ WARNING

Always fully depress the brake pedal before and while shifting out of the P (Park) position into another position to avoid inadvertent motion of the vehicle which could injure persons in or around the vehicle.

Shift-lock override

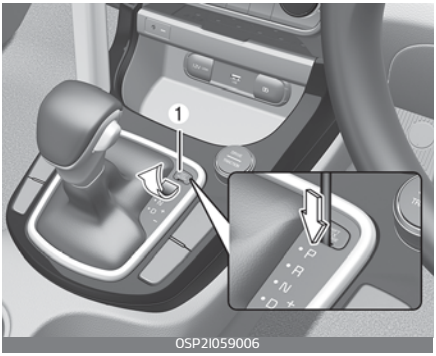

If the shift lever cannot be moved from the P (Park) position into R (Reverse) position with the brake pedal depressed, continue depressing the brake, then do the following:

1. Place the ignition switch in the LOCK/OFF position.
2. Apply the parking brake.
3. Carefully remove the cap (1) covering the shift-lock release access hole.
4. Insert a tool (e.g., flathead screwdriver) into the access hole and press down on the tool.
5. Move the shift lever.
6. Remove the tool from the shift-lock override access hole then install the cap.
7. Have the system inspected by a professional workshop. Kia recommends to visit an authorized Kia dealer/service partner.

Ignition key interlock system (if equipped)

The ignition key cannot be removed unless the shift lever is in the P (Park) position.

Good driving practices

- Never move the shift lever from P (Park) or N (Neutral) to any other position with the accelerator pedal depressed.
- Never move the shift lever into P (Park) when the vehicle is in motion.
- Be sure the vehicle is completely stopped before you attempt to shift into R (Reverse) or D (Drive).
- Never take the vehicle out of gear and coast down a hill. This may be extremely hazardous. Always leave the vehicle in gear when moving.
- Do not "ride" the brakes. This can cause them to overheat and malfunction. Instead, when you are driving down a long hill, slow down and shift to a lower gear. When you do this, engine braking will help slow down the vehicle.
- Slow down before shifting to a lower gear. Otherwise, the lower gear may not be engaged.
- Always use the parking brake. Do not depend on placing the transmission in P (Park) to keep the vehicle from moving.
- Exercise extreme caution when driving on a slippery surface. Be especially careful when braking, accelerating or shifting gears. On a slippery surface, an abrupt change in vehicle speed can cause the drive wheels to lose traction and the vehicle to go out of control.
- Optimum vehicle performance and economy is obtained by smoothly depressing and releasing the accelerator pedal.

⚠ WARNING

- When driving uphill or downhill, always shift to D (Drive) for driving forward or shift to R (Reverse) for driving backwards, and check the gear position indicated on the cluster before driving.
  Driving in the opposite direction of the selected gear can lead to a dangerous situation by shutting off the engine and affecting the braking performance.
- Always buckle-up! In a collision, an unbelted occupant is significantly more likely to be seriously injured or killed than a properly belted occupant.
- Avoid high speeds when cornering or turning.
- Do not make quick steering wheel movements, such as sharp lane changes or fast, sharp turns.
- The risk of rollover is greatly increased if you lose control of your vehicle at highway speeds.

- Loss of control often occurs if two or more wheels drop off the roadway and the driver oversteers to reenter the roadway.
- In the event your vehicle leaves the roadway, do not steer sharply. Instead, slow down before pulling back into the travel lanes.
- Never exceed posted speed limits.

⚠ WARNING

If your vehicle becomes stuck in snow, mud, sand, etc., then you may attempt to rock the vehicle free by moving it forward and backward. Do not attempt this procedure if people or objects are anywhere near the vehicle. During the rocking operation the vehicle may suddenly move forward of backward as it becomes unstuck, causing injury or damage to nearby people or objects.

Moving up a steep grade from a standing start

To move up a steep grade from a standing start, depress the brake pedal, shift the shift lever to D (Drive). Select the appropriate gear depending on load weight and steepness of the grade, and release the parking brake. Depress the accelerator gradually while releasing the service brakes.

When accelerating from a stop on a steep hill, the vehicle may have a tendency to roll backwards.

⚠ WARNING

When you start driving after the car was stopped on a hill, even though the shift lever is in D (Driving) position, if you do not step on the accelerator pedal or brake pedal, the car may roll backward, resulting in a fatal accident.

Always come to a complete stop before shifting into D (Drive).

Dual clutch transmission (DCT) (if equipped)

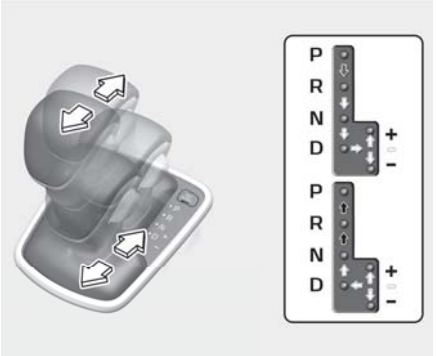

OSP2I059004

Depress the brake pedal and the lock release button when shifting.

Press the lock release button when shifting.

The shift lever can be shifted freely.

* To move the shift lever from/to P (Parking) or between R (Reverse) and D (Drive), you must depress the brake pedal for the vehicle to stand still.

Dual clutch transmission operation

The dual clutch transmission has 7 forward speeds and one reverse speed.

The individual speeds are selected automatically in the D (Drive) position.

WARNING

To reduce the risk of serious injury or death:

- ALWAYS check the surrounding areas near your vehicle for people, especially children, before shifting a vehicle into D (Drive) or R (Reverse).
- Before leaving the driver's seat, always make sure the shift lever is in the P (Park) position, then set the parking brake, and place the ignition switch in the LOCK/OFF position. Unexpected and sudden vehicle movement can occur if these precautions are not followed.
- When using Manual Shift Mode, use caution when shifting from a higher gear to a lower gear on slippery roads. This could cause the tires to slip and may result in an accident.

- To avoid damage to your transmission, do not try to accelerate with the shift lever in R (Reverse) or any forward gear position with the brake engaged.
- When stopped on a slope, do not hold the vehicle with accelerator pedal. Engage the service brake or the parking brake.

- The Dual Clutch Transmission gives the driving feel of a manual transmission, yet provides the ease of a fully automatic transmission. Unlike a traditional automatic transmission, the gear shifting can be felt (and heard) on the dual clutch transmission
  - Think of it as an automatically shifting manual transmission.

DCT warning messages

This warning message is displayed when vehicle is driven slowly on a grade and the vehicle detects that the brake pedal is not applied.

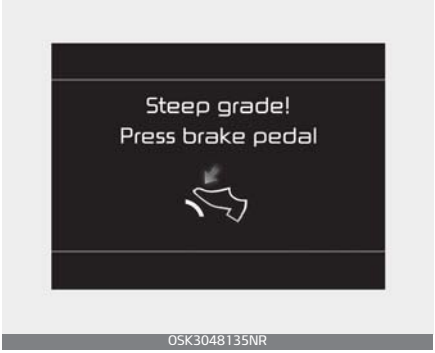

Steep grade

Driving up hills or on steep grades:

- To hold the vehicle on an incline use the foot brake or the parking brake.
- When in stop-and-go traffic on an incline, keep some distance ahead before moving the vehicle forward. Then hold the vehicle on the incline with the foot brake.
- If the vehicle is held on a hill by applying the accelerator pedal or by creeping with brake pedal disengaged, the clutch and transmission may overheat which can result in damage. At this time, a warning message will appear on the LCD display.

- If the LCD warning is active, the foot brake must be applied.
- Ignoring the warnings can lead to damage to the transmission.

Transmission high temperature

OSP2I049121

- Under certain conditions, such as repeated stop-and-go launches on steep grades, sudden take off or acceleration, or other harsh driving conditions, the transmission clutch temperatures will increase excessively. Finally the clutch in transmission could be overheated.

NOTICE

When driving in stop-and-go traffic, in stop condition, to reduce the driving stress and have better transmission operation move the shift lever to N (Neutral) or P (Parking) position.

- When the clutch is overheated, the safe protection mode engages and the gear position indicator on the cluster blinks with a chime. At this time, "Transmission temp. is high! Stop safely" warning message will appear on the LCD display and driving may not be smooth.
- If this occurs, pull over to a safe location, stop the vehicle with the engine running, apply the brakes and shift the vehicle to P (Park), and allow the transmission to cool.
- If you ignore this warning, the driving condition may become worse. You may experience abrupt shifts, frequent shifts, or jerkiness. To return to the normal driving condition, stop the vehicle and apply the foot brake or shift into P (Park).
  Then allow the transmission to cool for a few minutes with engine on, before driving off.
- When possible, drive the vehicle smoothly.

Transmission overheated

OSP2I059018

OSP2I049122

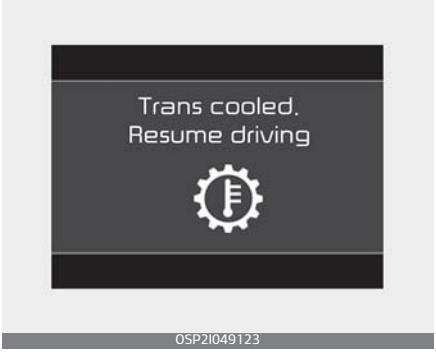

OSP2I049123

- If the vehicle continues to be driven and the clutch temperatures reach the maximum temperature limit, the " Transmission Hot! Park with engine on" warning will be displayed. When this occurs the clutch is disabled until the clutch cools to normal temperatures.
- The warning will display a time to wait for the transmission to cool.
- If this occurs, pull over to a safe location, stop the vehicle with the engine running, apply the brakes and shift the vehicle to P (Park), and allow the transmission to cool.
- When the message "Trans cooled. Resume driving." appears you can continue to drive your vehicle.
- When possible, drive the vehicle smoothly.

If any of the warning messages in the LCD display continue to blink, for your safety, We recommend have the system checked by an authorized Kia dealer.

Transmission ranges

The indicator in the instrument cluster displays the shift lever position when the ignition switch is in the ON position.

P (Park)

Always come to a complete stop before shifting into P (Park).

To shift from P (Park), you must depress firmly on the brake pedal and make sure your foot is off the accelerator pedal.

The shift lever must be in P (Park) before turning the engine off.

⚠ WARNING

- Shifting into P (Park) while the vehicle is in motion may cause you to lose control of the vehicle.
- After the vehicle has stopped, always make sure the shift lever is in P (Park), apply the parking brake, and turn the engine off.

- Do not use the P (Park) position in place of the parking brake.

R (Reverse)

Use this position to drive the vehicle backward.

⚠ CAUTION

Always come to a complete stop before shifting into or out of R (Reverse); you may damage the transmission if you shift into R (Reverse) while the vehicle is in motion.

N (Neutral)

The wheels and transmission are not engaged.

⚠ WARNING

Do not shift into gear unless your foot is firmly on the brake pedal. Shifting into gear when the engine is running at high speed can cause the vehicle to move very rapidly. You could lose control of the vehicle and hit people or objects.

⚠ WARNING

Do not drive with the shift lever in N (Neutral).

The engine brake will not work and lead to an accident.

Parking in N (Neutral) gear

Follow below steps when parking and you want the vehicle to move when pushed.

1. After parking your vehicle, step on the brake pedal and move the shift lever to "P" with the ignition button in "ON" or while the engine is running.
2. If the parking brake is applied unlock the parking brake.
3. While pressing the brake pedal, turn the ignition button "OFF".
   - For smart key equipped vehicles, the ignition switch can be moved to "OFF" only when the shift lever is in "P".
4. Change the gear shift lever to "N" (Neutral) while pressing the brake pedal and pushing "SHIFT LOCK RELEASE" button or inserting, pressing down a tool (e.g., flat-head screw-driver) into the "SHIFT LOCK RELEASE" access hole at the same time. Then, the vehicle will move when external force is applied.

⚠ CAUTION

- With the exception of parking in neutral gear, always park the vehicle in "P" (Park) for safety and engage the parking brake.
- Before parking in "N" (Neutral) gear, first make sure the parking ground is level and flat. Do not park in "N" gear on any slopes or gradients.
  If parked and left in "N", the vehicle may move and cause serious damage and injury.

D (Drive)

This is the normal driving position. The transmission will automatically shift through a 7 gear sequence, providing the best fuel economy and power.

For extra power when passing another vehicle or driving uphill depress the accelerator pedal further until you feel the transmission downshift to a lower gear.

To stop the vehicle during driving, please press brake pedal fully to prevent unintended movement.

Sports mode

Whether the vehicle is stationary or in motion, sports mode is selected by pushing the shift lever from the D (Drive) position into the manual gate. To return to D (Drive) range operation, push the shift lever back into the main gate.

SPORT mode manages the driving dynamics by automatically adjusting the steering effort, and the engine and transmission control logic for enhanced driver performance.

In sports mode, moving the shift lever backwards and forwards will allow you to make gearshifts rapidly. In contrast to a manual transmission, the sports mode allows gearshifts with the accelerator pedal depressed.

- Up (+): Push the lever forward once to shift up one gear.
- Down (–): Pull the lever backwards once to shift down one gear.

NOTICE

- In sports mode, the driver must execute upshifts in accordance with road conditions, taking care to keep the engine speed below the red zone.
- In sports mode, only the 7 forward gears can be selected. To reverse or park the vehicle, move the shift lever to the R (Reverse) or P (Park) position as required.
- In sports mode, downshifts are made automatically when the vehicle slows down. When the vehicle stops, 1st gear is automatically selected.
- In sports mode, when the engine rpm approaches the red zone shift points are varied to upshift automatically.
- To maintain the required levels of vehicle performance and safety, the system may not execute certain gearshifts when the shift lever is operated.
- When driving on a slippery road, push the shift lever forward into the + (up) position. This causes the transmission to shift into the 2nd gear which is better for smooth driving on a slippery road. Push the shift lever to the – (down) side to shift back to the 1st gear.
- When SPORT mode is activated:
  - The engine rpm will tend to remain raised over a certain length of time even after releasing the accelerator.
  - Upshifts are delayed when accelerating.
- In SPORT mode, the fuel efficiency may decrease.

Shift lock system (if equipped)

For your safety, the Dual clutch transmission has a shift lock system which prevents shifting the transmission from P (Park) into R (Reverse) unless the brake pedal is depressed.

To shift the transmission from P (Park) into R (Reverse):

1. Depress and hold the brake pedal.
2. Start the engine or turn the ignition switch to the ON position.
3. Move the shift lever.

If the brake pedal is repeatedly depressed and released with the shift lever in the P (Park) position, a chattering noise & vibration near the shift lever may be heard. This is a normal condition.

WARNING

Always fully depress the brake pedal before and while shifting out of the P (Park) position into another position to avoid inadvertent motion of the vehicle which could injure persons in or around the vehicle.

Good driving practices

- Never move the shift lever from P (Park) or N (Neutral) to any other position with the accelerator pedal depressed.
- Never move the shift lever into P (Park) when the vehicle is in motion.
- Be sure the car is completely stopped before you attempt to shift into R (Reverse) or D (Drive).
- Never take the car out of gear and coast down a hill. This may be extremely hazardous. Always leave the car in gear when moving.
- Do not "ride" the brakes. This can cause them to overheat and malfunction. Instead, when you are driving down a long hill, slow down and shift to a lower gear. When you do this, engine braking will help slow the car.
- Slow down before shifting to a lower gear. Otherwise, the lower gear may not be engaged.
- Always use the parking brake. Do not depend on placing the transmission in P (Park) to keep the car from moving.
- Exercise extreme caution when driving on a slippery surface. Be especially careful when braking, accelerating or shifting gears. On a slippery surface, an abrupt change in vehicle speed can cause the drive wheels to lose traction and the vehicle to go out of control.
- Optimum vehicle performance and economy is obtained by smoothly depressing and releasing the accelerator pedal.

⚠ WARNING

- When driving uphill or downhill, always shift to D (Drive) for driving forward or shift to R (Reverse) for driving backwards, and check the gear position indicated on the cluster before driving.
  Driving in the opposite direction of the selected gear can lead to a dangerous situation by shutting off the engine and affecting the braking performance.
- Always buckle-up! In a collision, an unbelted occupant is significantly more likely to be seriously injured or killed than a properly belted occupant.
- Avoid high speeds when cornering or turning.
- Do not make quick steering wheel movements, such as sharp lane changes or fast, sharp turns.
- The risk of rollover is greatly increased if you lose control of your vehicle at highway speeds.
- Loss of control often occurs if two or more wheels drop off the roadway and the driver oversteers to reenter the roadway.

- In the event your vehicle leaves the roadway, do not steer sharply. Instead, slow down before pulling back into the travel lanes.
- Never exceed posted speed limits.

⚠ WARNING

If your vehicle becomes stuck in snow, mud, sand, etc., then you may attempt to rock the vehicle free by moving it forward and backward. Do not attempt this procedure if people or objects are anywhere near the vehicle. During the rocking operation the vehicle may suddenly move forward of backward as it becomes unstuck, causing injury or damage to nearby people or objects.

Intelligent variable transmission (IVT) (if equipped)

The Intelligent Variable Transmission (IVT) automatically shifts depending on speed, accelerate pedal position. The individual speeds are selected automatically, depending on the position of the shift lever.

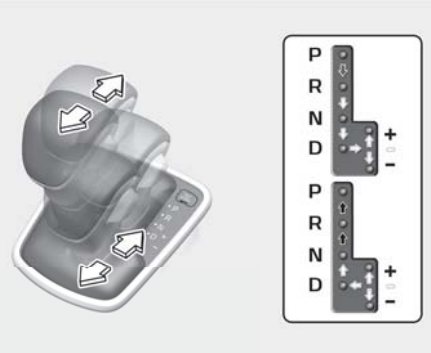

OSP2I059004

Depress the brake pedal and the lock release button when shifting.

Press the lock release button when shifting.

The shift lever can be shifted freely.

Intelligent Variable Transmission (IVT) operation

For smooth operation, depress the brake pedal when shifting from N (Neutral) to a forward or reverse gear.

⚠ WARNING

Intelligent Variable Transmission (IVT)

- Always check the surrounding areas near your vehicle for people, especially children, before shifting a car into D (Drive) or R (Reverse).
- Before leaving the driver's seat, always make sure the shift lever is in the P (Park) position; then set the parking brake fully and shut the engine off. Unexpected and sudden vehicle movement can occur if these precautions are not followed in the order identified.
- Do not use the engine brake (shifting from a high gear to lower gear) rapidly on slippery roads.
  The vehicle may slip causing an accident.

⚠ CAUTION

- To avoid damage to your transmission, do not accelerate the engine in R (Reverse) or any forward gear position with the brakes on.
- When stopped on an incline, do not hold the vehicle stationary with engine power. Use the service brake or the parking brake.
- Do not shift from N (Neutral) or P (Park) into D (Drive), or R (Reverse) when the engine is above idle speed.

Transmission ranges

The indicator in the instrument cluster displays the shift lever position when the ignition switch is in the ON position.

P (Park)

Always come to a complete stop before shifting into P (Park). This position locks the transmission and prevents the front wheels from rotating.

⚠ WARNING

- Shifting into P (Park) while the vehicle is in motion will cause the drive wheels to lock which will cause you to lose control of the vehicle.
- Do not use the P (Park) position in place of the parking brake. Always make sure the shift lever is latched in the P (Park) position and set the parking brake fully.
- Never leave a child unattended in a vehicle.

⚠ CAUTION

The transmission may be damaged if you shift into P (Park) while the vehicle is in motion.

⚠ CAUTION

The RPM (revolution per minute) may increase or decrease when performing the Intelligent Variable Transmission (IVT) self-diagnosis.

R (Reverse)

Use this position to drive the vehicle backward.

⚠ CAUTION

Always come to a complete stop before shifting into or out of R (Reverse); you may damage the transmission if you shift into R while the vehicle is in motion, except as explained in "Rocking the vehicle" on page 6-68.

N (Neutral)

The wheels and transmission are not engaged. The vehicle will roll freely even on the slightest incline unless the parking brake or service brakes are applied.

⚠ WARNING

Do not drive with the shift lever in N (Neutral).

The engine brake will not work and lead to an accident.

Parking in N (Neutral) gear

Follow below steps when parking and you want the vehicle to move when pushed.

1. After parking your vehicle, step on the brake pedal and move the shift lever to "P" with the ignition button in "ON" or while the engine is running.
2. If the parking brake is applied unlock the parking brake.
3. While pressing the brake pedal, turn the ignition button "OFF".
   - For smart key equipped vehicles, the ignition switch can be moved to "OFF" only when the shift lever is in "P".
4. Change the gear shift lever to "N" (Neutral) while pressing the brake pedal and pushing "SHIFT LOCK RELEASE" button or inserting, pressing down a tool (e.g., flat-head screw-driver) into the "SHIFT LOCK RELEASE" access hole at the same time. Then, the vehicle will move when external force is applied.

⚠ CAUTION

- With the exception of parking in neutral gear, always park the vehicle in "P" (Park) for safety and engage the parking brake.
- Before parking in "N" (Neutral) gear, first make sure the parking ground is level and flat. Do not park in "N" gear on any slopes or gradients.
  If parked and left in "N", the vehicle may move and cause serious damage and injury.

D (Drive)

This is the normal forward driving position. The transmission will automatically shift, providing the best fuel economy and power.

For extra power when passing another vehicle or climbing grades, depress the accelerator fully, at which time the transmission will automatically downshift to the next lower gear.

✻ NOTICE

Always come to a complete stop before shifting into D (Drive).

Sports mode

Whether the vehicle is stationary or in motion, sports mode is selected by pushing the shift lever from the D (Drive) position into the manual gate. To return to D (Drive) range operation, push the shift lever back into the main gate.

SPORT mode manages the driving dynamics by automatically adjusting the steering effort, and the engine and transmission control logic for enhanced driver performance.

In sports mode, moving the shift lever backwards and forwards will allow you to make gearshifts rapidly. In contrast to a manual transmission, the sports mode allows gearshifts with the accelerator pedal depressed.

- Up (+): Push the lever forward once to shift up one gear.
- Down (–): Pull the lever backwards once to shift down one gear.

✻ NOTICE

- In sports mode, the driver must execute upshifts in accordance with road conditions, taking care to keep the engine speed below the red zone.
- In sports mode, only the 8 forward gears can be selected. To reverse or park the vehicle, move the shift lever to the R (Reverse) or P (Park) position as required.
- In sports mode, downshifts are made automatically when the vehicle slows down. When the vehicle stops, 1st gear is automatically selected.

- In sports mode, when the engine rpm approaches the red zone shift points are varied to upshift automatically.
- To maintain the required levels of vehicle performance and safety, the system may not execute certain gearshifts when the shift lever is operated.
- When driving on a slippery road, push the shift lever forward into the + (up) position. This causes the transmission to shift into the 2nd gear which is better for smooth driving on a slippery road. Push the shift lever to the – (down) side to shift back to the 1st gear.
- When SPORT mode is activated:
  - The engine rpm will tend to remain raised over a certain length of time even after releasing the accelerator.
  - Upshifts are delayed when accelerating.
- In SPORT mode, the fuel efficiency may decrease.

Shift lock system (if equipped)

For your safety, the Intelligent Variable Transmission (IVT) has a shift lock system which prevents shifting the transmission from P (Park) into R (Reverse) unless the brake pedal is depressed.

To shift the transmission from P (Park) into R (Reverse):

1. Depress and hold the brake pedal.
2. Start the engine or turn the ignition switch to the ON position.
3. Move the shift lever.

If the brake pedal is repeatedly depressed and released with the shift lever in the P (Park) position, a chattering noise near the shift lever may be heard. This is a normal condition.

⚠ WARNING

Always fully depress the brake pedal before and while shifting out of the P (Park) position into another position to avoid inadvertent motion of the vehicle which could injure persons in or around the vehicle.

Good driving practices

- Never move the shift lever from P (Park) or N (Neutral) to any other position with the accelerator pedal depressed.
- Never move the shift lever into P (Park) when the vehicle is in motion.
- Be sure the vehicle is completely stopped before you attempt to shift into R (Reverse) or D (Drive).
- Never take the vehicle out of gear and coast down a hill. This may be extremely hazardous. Always leave the vehicle in gear when moving.
- Do not "ride" the brakes. This can cause them to overheat and malfunction. Instead, when you are driving down a long hill, slow down and shift to a lower gear. When you do this, engine braking will help slow down the vehicle.
- Slow down before shifting to a lower gear. Otherwise, the lower gear may not be engaged.
- Always use the parking brake. Do not depend on placing the transmission in P (Park) to keep the vehicle from moving.
- Exercise extreme caution when driving on a slippery surface. Be especially careful when braking, accelerating or shifting gears. On a slippery surface, an abrupt change in vehicle speed can cause the drive wheels to lose traction and the vehicle to go out of control.
- Optimum vehicle performance and economy is obtained by smoothly depressing and releasing the accelerator pedal.

⚠ WARNING

- Always buckle-up! In a collision, an unbelted occupant is significantly more likely to be seriously injured or killed than a properly belted occupant.
- Avoid high speeds when cornering or turning.
- Do not make quick steering wheel movements, such as sharp lane changes or fast, sharp turns.
- The risk of a rollover is greatly increased if you lose control of your vehicle at highway speeds.
- Losing control often occurs if two or more wheels drop off the roadway and the driver oversteers to reenter the roadway.
- In the event your vehicle leaves the roadway, do not steer sharply. Instead, slow down before pulling back into the travel lanes.
- Never exceed posted speed limits.

⚠ WARNING

If your vehicle becomes stuck in snow, mud, sand, etc., then you may attempt to rock the vehicle free by moving it forward and backward. Do not attempt this procedure if people or objects are anywhere near the vehicle. During the rocking operation the vehicle may suddenly move forward or backward as it becomes unstuck, causing injury or damage to nearby people or objects.

Moving up a steep grade from a standing start

To move up a steep grade from a standing start:

1. Depress the brake pedal, shift the shift lever to D (Drive).
2. Select the appropriate gear depending on load weight and steepness of the grade, and release the parking brake.
3. Depress the accelerator gradually while releasing the service brakes.

Brake system

Your vehicle has power-assisted brakes, parking brake, and various braking systems for safe driving.

Power brakes

Your vehicle has power-assisted brakes that adjust automatically through normal usage.

In the event that the power-assisted brakes lose power because of a stalled engine or some other reason, you can still stop your vehicle by applying greater force to the brake pedal than you normally would. The stopping distance, however, will be longer.

When the engine is not running, the reserve brake power is partially depleted each time the brake pedal is applied. Do not pump the brake pedal when the power assist has been interrupted.

Pump the brake pedal only when necessary to maintain steering control on slippery surfaces.

⚠ CAUTION

Brake Pedal

Do not drive with your foot resting on the brake pedal. This will create abnormally high brake temperatures which can cause excessive brake lining and pad wear.

⚠ WARNING

Steep hill braking

Avoid continuous application of the brakes when descending a long or steep hill by shifting to a lower gear. Continuous brake application will cause the brakes to overheat and could result in a temporary loss of braking performance.

Wet brakes may impair the vehicle's ability to safely slow down; the vehicle may also pull to one side when the brakes are applied. Applying the brakes lightly will indicate whether they have been affected in this way. Always test your brakes in this fashion after driving through deep water. To dry the brakes, apply them lightly while maintaining a safe forward speed until brake performance returns to normal.

In the event of brake failure

If service brakes fail to operate while the vehicle is in motion, you can make an emergency stop with the parking brake. The stopping distance, however, will be much greater than normal.

⚠ WARNING

Parking brake

Avoid applying the parking brake to stop the vehicle while it is moving except in an emergency situation. Applying the parking brake while the vehicle is moving at normal speeds can cause a sudden loss of control of the vehicle. If you must use the parking brake to stop the vehicle, use great caution in applying the brake.

Brake Over Accelerator

In the event the accelerator pedal becomes stuck or entrapped, apply steady and firm pressure to the brake pedal to slow the vehicle and reduce engine power.

If you experience this condition, take the following steps:

1. Apply the brakes and bring your vehicle to a safe stop.
2. Move the transmission to P (Park), switch the engine off and apply the parking brake.
3. Inspect the accelerator pedal for any interference.

If none are found and the condition persists, have your vehicle towed to an authorized Kia dealer and inspected.

Disc brakes wear indicator

When your brake pads are worn and new pads are required, you will hear a high-pitched warning sound from your front brakes or rear brakes. You may hear this sound come and go or it may occur whenever you press the brake pedal.

Please remember that some driving conditions or climates may cause a brake squeal when you first apply (or lightly apply) the brakes. This is normal and does not indicate a problem with your brakes.

Always replace the front or rear brake pads as pairs.

Rear drum brakes (if equipped)

Your rear drum brakes do not have wear indicators. Therefore, have the rear brake linings inspected if you hear a rear brake rubbing noise. Also have your rear brakes inspected each time you change or rotate your tires and when you have the front brakes replaced.

⚠ CAUTION

Replace brake pads

Do not continue to drive with worn brake pads. Continuing to drive with worn brake pads can damage the braking system and result in costly brake repairs.

⚠ WARNING

Brake wear

Do not ignore high pitched wear sounds from your brakes. If you ignore this audible warning, you will eventually lose braking performance, which could lead to a serious accident.

✻ NOTICE

Brake dust may accumulate on the wheels, even under normal driving conditions. Some dust is inevitable as the brakes wear and does contribute to brake noise.

Parking brake

After parking the vehicle, apply the parking brake to prevent the vehicle from being moved by the external force.

Applying the parking brake

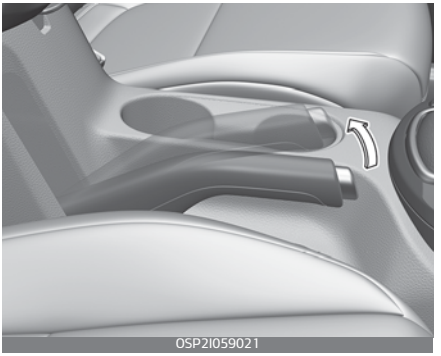

To engage the parking brake:

1. Apply the foot brake and then pull up the parking brake lever as far as possible.

In addition it is recommended that when parking the vehicle on a incline, the shift lever should be in a low gear on manual transmission vehicles.

⚠ CAUTION

- Driving with the parking brake applied will cause excessive brake pad and brake rotor wear.
- Do not operate the parking brake while the vehicle is moving except in an emergency situation. It could damage the vehicle system and make endanger driving safety.

Releasing the parking brake

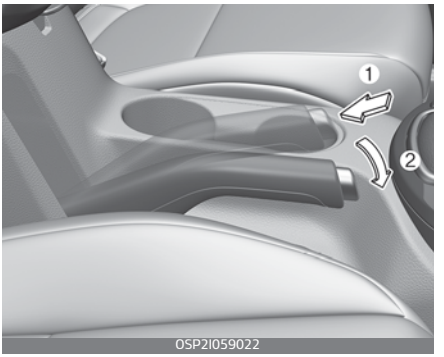

To release the parking brake:

1. Apply the foot brake and pull up the parking brake lever slightly.
2. Depress the release button (1) and lower the parking brake lever (2) while holding the button.

If the parking brake does not release or does not release all the way, have the system checked by a profes-sional workshop. Kia recommends to visit an authorized Kia dealer.

- Be cautious when parking on a hill. Firmly engage the parking brake and place the shift lever in first or reverse gear (manual transmis-sion). If your vehicle is facing downhill, turn the front wheels into the curb to help keep the vehicle from rolling. If your vehicle is facing uphill, turn the front wheels away from the curb to help keep the vehicle from rolling. If there is no curb or if it is required by other conditions to keep the vehicle from rolling, block the wheels.

- Under some conditions your parking brake can freeze in the engaged position. This is most likely to happen when there is an accumulation of snow or ice around or near the rear brakes or if the brakes are wet. If there is a risk that the parking brake may freeze, apply it only temporarily while you put the shift lever in first or reverse gear (manual transmission) and block the rear wheels so the vehicle cannot roll. Then release the parking brake.
- Do not hold the vehicle on the upgrade with the accelerator pedal. This can cause the transmission to overheat. Always use the brake pedal or parking brake.

⚠ WARNING

- Never allow a passenger to touch the parking brake. If the parking brake is released unintentionally, serious injury may occur.
- All vehicles should always have the parking brake fully engaged when parking to avoid inadvertent movement of the vehicle which can injure occupants or pedestrians.

Check the brake warning light by turning the ignition switch ON (do not start the engine). This light will be illuminated when the parking brake is applied with the ignition switch in the START or ON position.

Before driving, be sure the parking brake is fully released and the brake warning light is off.

If the brake warning light remains on after the parking brake is released while engine is running, there may be a malfunction in the brake system. Immediate attention is necessary.

If at all possible, cease driving the vehicle immediately. If that is not possible, use extreme caution while operating the vehicle and only continue to drive the vehicle until you can reach a safe location or repair shop.

Anti-lock Brake System (ABS)

The Anti-lock Brake System (ABS) prevents the wheels from locking. So the vehicle remains stable and can still be steered.

ABS (or ESC) will not prevent accidents due to improper or dangerous driving maneuvers. Even though vehicle control is improved during emergency braking, always maintain a safe distance between you and objects ahead. Vehicle speeds should always be reduced during extreme road conditions. The vehicle

should be driven at reduced speeds in the following circumstances:

- When driving on rough, gravel or snow-covered roads
- When driving with tire chains installed
- When driving on roads where the road surface is pitted or has different surface heights.

Driving in these conditions increases the stopping distance for your vehicle.

The ABS continuously senses the speed of the wheels. If the wheels are going to lock, the ABS repeatedly modulates the hydraulic brake pressure to the wheels.

When you apply your brakes under conditions which may lock the wheels, you may hear a "tik-tik" sound from the brakes, or feel a corresponding sensation in the brake pedal. This is normal and it means your ABS is active.

In order to obtain the maximum benefit from your ABS in an emergency situation, do not attempt to modulate your brake pressure and do not try to pump your brakes. Press your brake pedal as hard as possible to allow the ABS to control the force being delivered to the brakes.

NOTICE

A click sound may be heard in the vehicle compartment when the vehicle begins to move after the vehicle is started. These conditions are normal and indicate that the Anti-lock Brake System is functioning properly.

Even with the Anti-lock Brake System, your vehicle still requires sufficient stopping distance. Always maintain a safe distance from the vehicle in front of you.

Always slow down when cornering. The Anti-lock Brake System cannot prevent accidents resulting from excessive speeds.

On loose or uneven road surfaces, operation of the Anti-lock Brake System may result in a longer stopping distance than for vehicles equipped with a conventional brake system.

The ABS warning light will stay on for approximately 3 seconds after the ENGINE START/STOP button is ON.

During that time, the ABS will go through selfdiagnosis and the light will go off if everything is normal. If the light stays on, you may have a

problem with your ABS. Contact an authorized Kia dealer as soon as possible.

When you drive on a road having poor traction, such as an icy road, and have operated your brakes continuously, the ABS will be active continuously and the ABS warning light may illuminate. Pull your vehicle over to a safe place and stop the vehicle.

Restart the vehicle. If the ABS warning light goes off, then your ABS is normal. Otherwise, you may have a problem with the ABS. Contact an authorized Kia dealer as soon as possible.

NOTICE

When you jump start your vehicle because of a drained battery, the vehicle may not run as smoothly and the ABS warning light may turn on at the same time. This happens because of low battery voltage. It does not mean your ABS has malfunctioned.

- Do not pump your brakes!
- Have the battery recharged before driving the vehicle.

Electronic Stability Control (ESC) system (if equipped)

The Electronic Stability Control (ESC) is designed to stabilize the vehicle during cornering maneuvers.

ESC applies the brakes on individual wheels and intervenes with the vehicle management system to stabilize the vehicle.

ESC will not prevent accidents. Excessive speed in turns, abrupt maneuvers and hydroplaning on wet surfaces can still result in serious accidents.

Only a safe and attentive driver can prevent accidents by avoiding maneuvers that cause the vehicle to lose traction. Even with ESC installed, always follow all the normal precautions for driving – including driving at safe speeds for the conditions.

⚠ WARNING

Never drive too fast for the road conditions or too quickly when cornering. Electronic stability Control (ESC) will not prevent accidents. Excessive speed in turns, abrupt maneuvers and hydroplaning on wet surfaces can still result in serious accidents. Only a safe and attentive driver can prevent accidents by avoiding maneuvers that cause the vehicle to lose traction. Even with ESC installed, always follow all the normal precautions for driving - including driving at safe speeds for the conditions.

The ESC system is an electronic system designed to help the driver maintain vehicle control under adverse conditions. It is not a substitute for safe driving practices. Factors including speed, road conditions and driver steering input can all affect whether ESC will be effective in preventing a loss of control. It is still your responsibility to drive and corner at reasonable speeds and to leave a sufficient margin of safety.

When you apply your brakes under conditions which may lock the wheels, you may hear a "tik-tik" sound from the brakes, or feel a corresponding sensation in the brake pedal. This is normal and it means your ESC is active.

✻ NOTICE

A click sound may be heard in the vehicle compartment when the vehicle begins to move after the vehicle is started. These conditions are normal and indicate that the Electronic Stability Control system is functioning properly.

ESC operation

ESC ON condition

- When the ENGINE START/STOP button is turned ON, ESC and ESC OFF indicator lights illuminate for approximately 3 seconds, then ESC is turned on.
- Press the ESC OFF button for at least half a second after turning the vehicle ON to turn ESC off. (ESC OFF indicator will illuminate). To turn the ESC on, press the ESC OFF button (ESC OFF indicator light will go off).
- When starting the vehicle, you may hear a slight ticking sound. This is the ESC performing an automatic system self-check and does not indicate a problem.

When operating

When the ESC is in operation, the ESC indicator light blinks. When the Electronic Stability Control is operating properly, you can feel a slight pulsation in the vehicle. This is only the effect of brake control and indicates nothing unusual.
When moving out of the mud or driving on a slippery road, pressing the accelerator pedal may not cause the vehicle rpm (revolutions per minute) to increase.

ESC operation off

This car has 2 kinds of ESC off states.
If the vehicle stops when ESC is off, ESC remains off. Upon restarting the vehicle, the ESC will automatically turn on again.

OSP2I059016

ESC off state 1

To turn off the traction control function and only operate the brake control function of the ESC, press the ESC OFF button (ESC OFF) for less than 3 seconds and the ESC OFF indicator light (ESC OFF) will illuminate.

OSP2I059017

ESC off state 2

To turn off the traction control function and the brake control function of the ESC, press the ESC OFF button (ESC OFF) for more than 3 seconds. ESC OFF indicator light (ESC OFF) will illuminate and ESC OFF warning chime will sound. At this state, the car stability control function does not operate any more.

Indicator light

ESC indicator light

ESC OFF indicator light

When ENGINE START/STOP button is turned to ON, the indicator light illuminates, then goes off if the ESC system is operating normally.

The ESC indicator light blinks whenever ESC is operating or illuminates when ESC fails to operate.

The ESC OFF indicator light comes on when the ESC is turned off with the button.

⚠ WARNING

Electronic Stability Control

Drive carefully even though your vehicle has Electronic Stability Control. It can only assist you in maintaining control under certain circumstances.

ESC OFF usage

When driving

- ESC should be turned on for daily driving whenever possible.
- To turn ESC off while driving, press the ESC OFF button while driving on a flat road surface.

⚠ WARNING

Operating ESC

Never press the ESC OFF button while ESC is operating (ESC indicator light blinks).

If ESC is turned off while ESC is operating, the vehicle may slip out of control.

✻ NOTICE

- When operating the vehicle on a dynamometer, ensure that the ESC is turned off (ESC OFF light illuminated). If the ESC is left on, it may prevent the vehicle speed from increasing, and result in false diagnosis.
- Turning the ESC off does not affect ABS or brake system operation.

Vehicle Stability Management (VSM) system (if equipped)

The Vehicle Stability Management (VSM) provides further enhancements to vehicle stability and steering responses under the following condition:

- when driving on a slippery road or
- when a change in the coefficient of friction between left and right wheels is detected.

⚠ WARNING

Tire/Wheel size

When replacing tires and wheels, make sure they are the same size as the original tires and wheels installed. Driving with varying tire or wheel sizes may diminish any supplemental safety benefits of the VSM system.

VSM operation

When the VSM is in operation, ESC indicator light ( ) blinks.

When the VSM is operating properly, you can feel a slight pulsation in the vehicle and/or abnormal steering responses (EPS (Electric Power Steering)). This is only the effect of brake and EPS control and indicates nothing unusual.

The VSM does not operate when:

- Driving on a sloping road such as a gradient or incline
- Driving in reverse
- ESC OFF indicator light (OFF) remains on the instrument cluster
- EPS indicator light remains on the instrument cluster

VSM operation off

If you press the ESC OFF button to turn off the ESC, the VSM will also cancel and the ESC OFF indicator light (OFF) illuminates.

To turn on the VSM, press the button again. The ESC OFF indicator light goes out.

⚠ WARNING

Vehicle Stability Management

Drive carefully even though your vehicle has Vehicle Stability Management. It can only assist you in maintaining control of the vehicle under certain circumstances.

Malfunction indicator

The VSM can be deactivated even if you don't cancel the VSM operation by pressing the ESC OFF button. It indicates that a malfunction has been detected somewhere in the Electric Power Steering system or VSM system. If the ESC indicator light ( ) or EPS warning light remains on, take your vehicle to an authorized Kia dealer and have the system checked.

The VSM is not a substitute for safe driving practices but a supplementary function only. It is the responsibility of the driver to always check the speed and the distance to the vehicle ahead. Always hold the steering wheel firmly while driving.

Your vehicle is designed to activate according to the driver's intention, even with installed VSM. Always follow all the normal precautions for driving at safe speeds for the conditions – including driving in clement weather and on a slippery road.

⚠ WARNING

For maximum protection, always wear your seat belt. No system, no matter how advanced, can compensate for all driver error and/or driving conditions. Always drive responsibly.

Hill-start Assist Control (HAC) (if equipped)

A vehicle has the tendency to roll back on a steep hill when it starts to go after stopping. The Hill-start Assist Control (HAC) prevents the vehicle from rolling back by applying the brakes automatically for about 2 seconds.

The brakes are released when the accelerator pedal is engaged or after about 2 seconds.

The HAC is activated only for about 2 seconds, so when the vehicle is starting off always engaged the accelerator pedal.

⚠ WARNING

Maintaining Brake Pressure on Incline

HAC does not replace the need to apply brakes while stopped on an incline. While stopped, make sure you maintain brake pressure sufficient to prevent your vehicle from rolling backward and causing an accident. Don't release the brake pedal until you are ready to accelerate forward.

Emergency Stop Signal (ESS)

The Emergency Stop Signal system alerts the driver behind by blinking the stop light when the vehicle is braked rapidly and severely. The system is activated when:

- The vehicle suddenly stops (vehicle speed is over 55km/h and the vehicle deceleration at greater than 7 m/s2)
- The ABS is activating
  When the vehicle speed is under 40 km/h and the ABS deactivates or the sudden stop situation is over, the stop light blinking will stop. Instead, the hazard warning flasher will turn on automatically. The hazard warning flasher will turn off when vehicle speed is over 10km/h after the vehicle has stopped. Also, it will turn off when the vehicle is driven at low speed for some time. You can turn it off manually by pushing the hazard warning flasher switch.

⚠ CAUTION

The Emergency Stop Signal (ESS) system will not work if the hazard warning flasher is already on.

Good braking practices

Good braking practices help keep occupants safe and extend brake life.

- Check to be sure the parking brake is not engaged and the parking brake indicator light is out before driving away.
- Driving through water may get the brakes wet. They can also get wet when the vehicle is washed. Wet brakes can be dangerous! Your vehicle will not stop as quickly if the brakes are wet. Wet brakes may cause the vehicle to pull to one side.
  To dry the brakes, apply the brakes lightly until the braking action returns to normal, taking care to keep the vehicle under control at all times. If the braking action does not return to normal, stop as soon as it is safe to do so and call an authorized Kia dealer for assistance.
- Don't coast down hills with the vehicle out of gear. This is extremely hazardous. Keep the

vehicle in gear at all times, use the brakes to slow down, then shift to a lower gear so that vehicle braking will help you maintain a safe speed.

- Don't "ride" the brake pedal. Resting your foot on the brake pedal while driving can be dangerous because the brakes might overheat and lose their effectiveness. It also increases the wear of the brake components.
- If a tire goes flat while you are driving, apply the brakes gently and keep the vehicle pointed straight ahead while you slow down. When you are moving slowly enough for it to be safe to do so, pull off the road and stop in a safe place.
- Be cautious when parking on a hill. Firmly engage the parking brake and place the shifter dial in P. If your vehicle is facing downhill, turn the front wheels into the curb to help keep the vehicle from rolling.
  If your vehicle is facing uphill, turn the front wheels away from the curb to help keep the vehicle from rolling. If there is no curb or if it is required by other conditions to keep the vehicle from rolling, block the wheels.
- Under some conditions your parking brake can freeze in the engaged position. This is most likely to happen when there is an accumulation of snow or ice around or near the rear brakes or if the brakes are wet. If there is a risk that the parking brake may freeze, apply it only temporarily while you put the shifter dial in P and block the rear wheels so the vehicle cannot roll. Then release the parking brake.
- Do not hold the vehicle on an incline with the accelerator pedal. This can cause the transmission to overheat. Always use the brake pedal or parking brake.

Drive mode integrated control system (if equipped)

The drive mode may be selected according to the driver's preference or road condition.

The mode changes whenever the DRIVE MODE knob is turned.

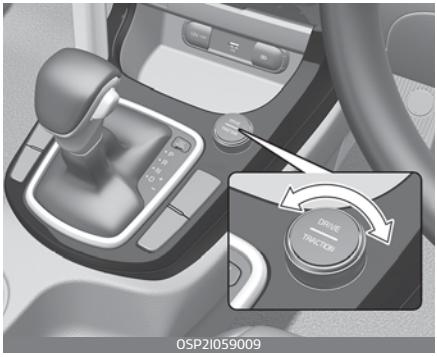

OSP2I059009

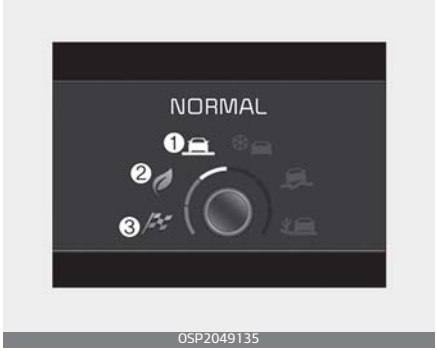

OSP2049135

1. NORMAL mode: NORMAL mode provides soft driving and comfortable riding.
2. ECO mode: ECO mode improves fuel efficiency for eco-friendly driving.
3. SPORT mode: SPORT mode provides sporty but firm riding.

If the driving mode is in NORMAL/SPORT/ECO mode, it will be set to NORMAL mode when the engine is restarted.

ECO mode

ECO

When the Drive Mode is set to ECO mode, the engine and transmission control logic are changed to maximize fuel efficiency.

- When ECO mode is selected by turning the Drive mode knob, the ECO indicator will illuminate.
- Whenever the engine is restarted, the Drive Mode will revert back to NORMAL mode. If ECO mode is desired, re-select ECO mode from the knob.

NOTICE

Fuel efficiency depends on the driver's driving habit and road condition.

When ECO mode is activated:

- The acceleration response may be slightly reduced if the accelerator pedal is engaged moderately.
- The shift pattern of the automatic transmission may change.

The above situations are normal conditions when ECO mode is activated to improve fuel efficiency.

Limitation of ECO mode operation:

If the following conditions occur while ECO mode is operating, the system operation is limited even though there is no change in the ECO indicator.

- When driving the vehicle with the Automatic/DCT/IVT transmission gear shift lever in sport mode. The system will be limited according to the shift location.

SPORT mode

SPORT

SPORT mode manages the driving dynamics by automatically adjusting the steering effort, and the engine and transmission control logic for enhanced driver performance.

- When SPORT mode is selected by turning the knob, the SPORT indicator will illuminate.
- Whenever the engine is restarted, the Drive Mode will revert back to NORMAL mode. If SPORT mode is desired, re-select SPORT mode from the knob.
- When SPORT mode is activated:
  - The engine rpm will tend to remain raised over a certain length of time even after releasing the accelerator.
  - Upshifts are delayed when accelerating.

NOTICE

In SPORT mode, the fuel efficiency may decrease.

Traction control (if equipped)

Traction Control is a system that achieve optimal driving performance by controlling engine and braking by road condition (snow, muddy, sandy)

Traction control mode

OSP2059184

If you press the "DRIVE/TRACTION" mode button, the driving mode is changed from Driving control to Traction control. You can select SNOW (1), MUD (2) or SAND (3) mode by rotation the knob. If you press the "DRIVE/TRACTION" mode button again, the driving mode is changed from Traction Control to previous driving control.

The driving mode will be set to Driving control when the restarted, If it is in Traction Control.

⚠ WARNING

Traction mode is a device applied for 2WD(2 wheel drive) vehicles. Please do not drive too hard on rough roads where 4WD(4 wheel drive) vehicles performance are required.

Invalid mode selection can lead to loss of traction and skidding, particularly on slippery roads, this can cause you to lose control of the vehicle, which can lead to accidents and serious injuries.

Traction mode operation

Traction mode offers special traction tuning for snow/mud/sand, optimizing available traction in adverse conditions. Traction mode adjusts left and right wheel slip control, engine torque and shift patterns according to available traction levels.

Driving in sand or mud

- Maintain slow and constant speed. Operate the accelerator pedal slowly to ensure safe driving (wheel-slip prevention).
- Use tire chains driving in mud if necessary.
- Keep sufficient distance between your vehicle and the vehicle in front of you.
- Reduce vehicle speed and always check the road condition.
- Avoid speeding, rapid acceleration, sudden brake applications, and sharp turns to prevent getting stuck.

✻ NOTICE

- Moving the car forcibly to get out of mud or sand can cause damage/overheat of the engine or damage/breakdown of the transmission as well as damage to tires. If excessive wheel slip occurs after entering a sandy/muddy road, the vehicle may fall into the sand/mud. When it happens, put a stone or a tree branch under the tire, and then try to pull out the car, or try to get it unstuck by repeatedly moving forwards and backwards.
- When the vehicle is stuck in snow, sand or mud, the tires may not operate. This is to protect the

transmission and not a malfunc¯ tion.

Transmission overheated

OSP2I059018

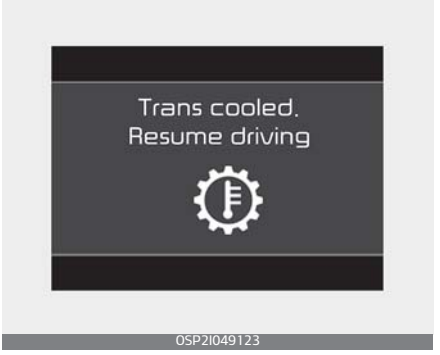

OSP2I049123

- When driving on muddy and sandy roads under the severe condition, the transmission could be over¯ heated.
- When the transmission is over¯ heated, the safe protection mode engages and the "Transmission Hot! Park with engine on" warning message will appear on the LCD display with a chime.
- If this occurs, pull over to a safe location, stop the vehicle with the engine running, apply the brakes and shift the vehicle to P (Park), and allow the transmission to cool.
- If you ignore this warning, the driving condition may become worse. You may experience abrupt shifts, frequent shifts, or jerkiness. To return to the normal driving condition, stop the vehicle and apply the foot brake or shift into P (Park). Then allow the transmission to cool for a few minutes with engine on, before driving off.
- When the message "Trans cooled. Resume driving" appears you can continue to drive your vehicle.

If the warning messages in the LCD display continue to blink, for your safety, have the system checked by an authorized Kia dealer.

Blind-Spot View Monitor (BVM) (if equipped)

Blind-Spot View Monitor displays the driver's and passenger's side rear view area including some blind area which cannot be viewed from RVM.

OSP2I040098

To turn on BVM

When BVM is enabled in the settings.

1. ENGINE START/STOP button is in the ON position.
2. The turn signal is activated.

To turn off BVM

1. ENGINE START/STOP button is in the OFF position.
2. The turn signal is deactivated.
3. Other warning screen pops up and takes priority over BVM.

⚠ WARNING

Like all assistance system, BVM has limitations. Sole-reliance on the system may result in a collision.

⚠ WARNING

- **ALWAYS** look around your vehicle to make sure there are no objects or obstacles before moving the vehicle in any direction to prevent a collision.
- Objects are closer than they appear. Failure to visually confirm that is safe to change the lane before doing so may result in crash and serious injury or death.
- Always keep the camera lens clean. The camera may not work normally if the lens is covered with foreign material.

You can activate or deactivate Blind-Spot View Monitor function when you select 'Driver Assistance → Blind-Spot Safety → Blind-Spot View' from the User Settings mode in the cluster LCD display.

CRUISE CONTROL (CC) (if equipped)

Cruise Control system allows you to program the vehicle to maintain a constant speed without pressing the accelerator pedal.

This system is designed to function above approximately 30 km/h.

⚠ WARNING

- If Cruise Control is left on, (CRUISE indicator light in the instrument cluster illuminated) Cruise Control can be switched on accidentally. Keep Cruise Control system off (CRUISE indicator light OFF) when Cruise Control is not in use, to avoid inadvertently setting a speed.
- Use Cruise Control system only when traveling on open highways in good weather.
- Do not use Cruise Control when it may not be safe to keep the car at a constant speed, for instance, driving in heavy or varying traffic, or on slippery (rainy, icy or snow-covered) or winding roads or over 6% uphill or down-hill roads.
- Pay particular attention to the driving conditions whenever using Cruise Control system.

⚠ CAUTION

During cruise-speed driving of a manual transmission vehicle, do not shift into neutral without depressing the clutch pedal, since the engine will be overrevved. If this happens, depress the clutch pedal or release Cruise button.

✻ NOTICE

During normal Cruise Control operation, when the SET- switch is activated or reactivated after applying the brakes, Cruise Control will energize after approximately 3 seconds. This delay is normal.

✻ NOTICE

To activate Cruise Control, depress the brake pedal at least once after turning the ignition switch to the ON position or starting the engine. This is to check if the brake switch which is important part to cancel Cruise Control is in normal condition.

Cruise Control switch

- CRUISE: Turns Cruise Control system on or off.
- RES+: Resumes or increases Cruise Control speed.
- SET-: Sets or decreases Cruise Control speed.

- CANCEL: Cancels Cruise Control operation.

OSP2I059010

Setting Cruise Control speed

1. Press the CRUISE button on the steering wheel, to turn the system on. The cruise status on the LCD screen will appear.

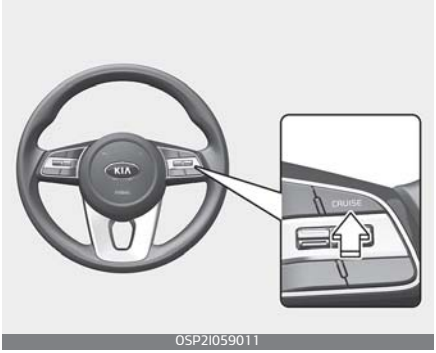

OSP2I059011

2. Accelerate to the desired speed, which must be more than 30 km/h.

NOTICE

Manual transmission

For manual transmission vehicles, you should depress the brake pedal at least once to set Cruise Control after starting the engine.

3. Move the SET– switch down and release it at the desired speed. The cruise status on the LCD screen will appear. Release the accelerator pedal at the same time. The desired speed will automatically be maintained.
   On a steep grade, the vehicle may slow down or speed up slightly while going downhill.

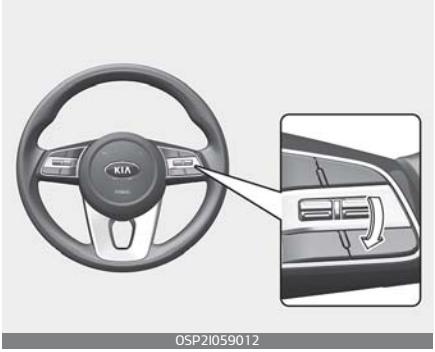

OSP2I059012

Increasing Cruise Control set speed

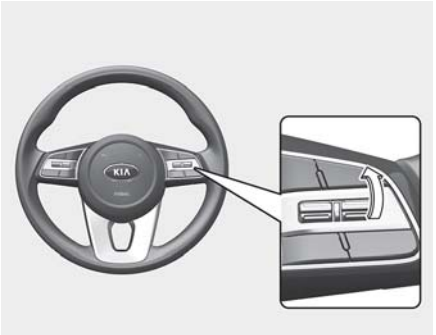

OSP2I059013

Follow either of these procedures:

- Move the RES+ switch up and hold it. Your vehicle set speed will increase by 10 km/h. Release the switch at the speed you want.
- Move the RES+ switch up and release it immediately. The cruising speed will increase by 1.0 km/h each time you move the RES+ switch up in this manner.

Decreasing the cruising speed

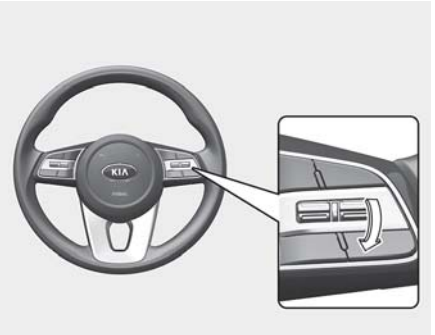

OSP2I059012

Follow either of these procedures:

- Move the SET– switch down and hold it. Your vehicle set speed will decrease by 10 km/h. Release the switch at the speed you want to maintain.
- Move the SET– switch down and release it immediately. The cruising speed will decrease by 1.0 km/h each time you move the SET– switch down in this manner.

Accelerating temporarily with Cruise Control on

- If you want to speed up temporarily when Cruise Control is on, depress the accelerator pedal. Increased speed will not interfere with Cruise Control operation or change the set speed.
- To return to the set speed, take your foot off the accelerator pedal.

Cancelling Cruise Control

Follow either of these procedures:

- Depress the brake pedal.

- Depress the clutch pedal if equipped with a manual transmission.
- Press the CANCEL button. located on the steering wheel.

OSP2I059014

- Decrease the vehicle speed lower than the memory speed by 20 km/h.
- Decrease the vehicle speed to less than approximately 30 km/h.

Each of these actions will cancel Cruise Control operation (the cruise set speed will disappear), but it will not turn the system off. If you wish to resume Cruise Control operation, move up the RES+ switch located on your steering wheel. You will return to your previously preset speed.

Resuming cruising speed at more than approximately 30 km/h

If any method other than the CRUISE button was used to cancel cruising speed and the system is still activated, the most recent set speed will automatically resume when you move the switch up (to RES+).

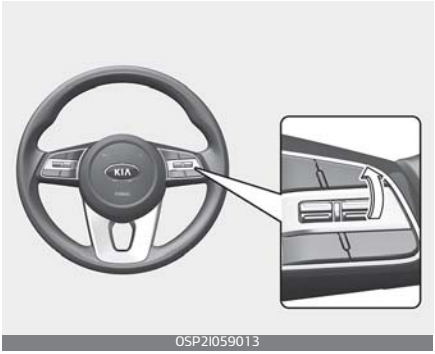

OSP2I059013

It will not resume, however, if the vehicle speed has dropped below approximately 30 km/h.

Turning Cruise Control off

Follow either of these procedures:

- Press the CRUISE button (The cruise status on the LCD screen will disappear).
- Turn the ignition off.

Both of these actions cancel Cruise Control operation. If you want to resume Cruise Control operation, repeat the steps provided in "Setting Cruise Control speed" on page 6-63.

Economical operation

Your vehicle's fuel economy depends mainly on your style of driving, where you drive and when you drive.

Each of these factors affects how many kilometers you can get from a liter of fuel. To operate your vehicle as economically as possible, use the following driving suggestions to help save money in both fuel and repairs:

- Drive smoothly. Accelerate at a moderate rate. Don't make "jack-rabbit" starts or full-throttle shifts and maintain a steady cruising speed. Don't race between stoplights. Try to adjust your speed to the traffic so you don't have to change speeds unnecessarily. Avoid heavy traffic whenever possible.
  Always maintain a safe distance from other vehicles so you can avoid unnecessary braking. This also reduces brake wear.
- Drive at a moderate speed. The faster you drive, the more fuel your vehicle uses. Driving at a moderate speed, especially on the highway, is one of the most effective ways to reduce fuel consumption.
- Don't "ride" the brake pedal. This can increase fuel consumption and also increase wear on these components. In addition, driving with your foot resting on the brake pedal may cause the brakes to overheat, which reduces their effectiveness and may lead to more serious consequences.
- Take care of your tires. Keep them inflated to the recommended pressure. Incorrect inflation, either too much or too little, results in unnecessary tire wear. Check the tire pressures at least once a month.
- Be sure that the wheels are aligned correctly. Improper alignment can result from hitting curbs or driving too fast over irregular surfaces. Poor alignment causes faster tire wear and may also result in other problems as well as greater fuel consumption.
- Keep your car in good condition. For better fuel economy and reduced maintenance costs, maintain your car in accordance with the maintenance schedule in "Scheduled maintenance service" on page 8-12. If you drive your car in severe conditions, more frequent maintenance is required (Refer to "Maintenance Under Severe Usage Conditions" on page 8-17 for details).

- Keep your car clean. For maximum service, your vehicle should be kept clean and free of corrosive materials. It is especially important that mud, dirt, ice, etc. not be allowed to accumulate on the underside of the car. This extra weight can result in increased fuel consumption and also contribute to corrosion.
- Travel lightly. Don't carry unnecessary weight in your car. Weight reduces fuel economy.
- Don't let the engine idle longer than necessary. If you are waiting (and not in traffic), turn off your engine and restart only when you're ready to go.
- Remember, your vehicle does not require extended warm-up. After the engine has started, allow the engine to run for 10 to 20 seconds prior to placing the vehicle in gear. In very cold weather, however, give your engine a slightly longer warm-up period.
- Don't "lug" or "over-rev" the engine. Lugging is driving too slowly in too high a gear resulting in the engine bucking. If this happens, shift to a lower gear. Over-revving is racing the engine beyond its safe limit. This can be avoided by shifting at the recommended speeds.
- Use your air conditioning sparingly. The air conditioning system is operated by engine power so your fuel economy is reduced when you use it.
- Open windows at high speeds can reduce fuel economy.
- Fuel economy is less in crosswinds and headwinds. To help offset some of this loss, slow down when driving in these conditions.

Keeping a vehicle in good operating condition is important both for economy and safety. Therefore, have the system serviced by a professional workshop.

Kia recommends to visit an authorized Kia dealer/service partner.

⚠ WARNING

Engine off during motion

Never turn the engine off to coast down hills or anytime the vehicle is in motion. The power steering and power brakes will not function properly without the engine running. Instead, keep the engine on and downshift to an appropriate gear for engine braking effect. In addition, turning off the ignition while driving could engage the steering wheel lock resulting in loss of vehicle steering which could cause serious injury or death.

Special driving conditions

If driving conditions deteriorate due to poor weather or road conditions, you should pay even more attention than usual to your driving.

Hazardous driving conditions

When hazardous driving conditions are encountered such as water, snow, ice, mud, sand, or similar hazards, follow these suggestions:

- Drive cautiously and allow extra distance for braking.
- Avoid sudden braking or steering.
- When braking with non-ABS brakes pump the brake pedal with a light up-and-down motion until the vehicle is stopped.
- Do not pump the brake pedal on a vehicle equipped with ABS.
- If stalled in snow, mud, or sand, use the second gear. Accelerate slowly to avoid spinning the drive wheels.
- Use sand, rock salt, or other non-slip material under the drive wheels to provide traction when stalled in ice, snow, or mud.

Rocking the vehicle

If it is necessary to rock the vehicle to free it from snow, sand, or mud, first turn the steering wheel right and left to clear the area around your front wheels. Then, shift back and forth between R (Reverse) and any forward gear.

Do not race the vehicle, and spin the wheels as little as possible. If you are still stuck after a few tries, have the vehicle pulled out by a tow vehicle to avoid vehicle overheating and possible damage to the transmission.

⚠ WARNING

Sudden Vehicle Movement

Do not attempt to rock the vehicle if people or objects are nearby. The vehicle may suddenly move forward or backwards as it becomes unstuck.

⚠ CAUTION

Vehicle rocking

Prolonged rocking may cause vehicle overheating, transmission damage or failure, and tire damage.

⚠ CAUTION

Spinning tires

Do not spin the wheels, especially at speeds more than 56 km/h. Spinning the wheels at high speeds when the vehicle is stationary could cause a tire to overheat which could result in tire damage that may injure bystanders.

The Electronic Stability Control (ESC) should be turned OFF prior to rocking the vehicle.

Smooth cornering

Avoid braking or gear changing in corners, especially when roads are wet. Ideally, corners should always be taken under gentle acceleration. If you follow these suggestions, tire wear will be held to a minimum.

Driving at night

Because night driving presents more hazards than driving in the daylight, here are some important tips to remember:

- Slow down and keep more distance between you and other vehicles, as it may be more difficult to see at night, especially in areas where there may not be any street lights.
- Adjust your mirrors to reduce the glare from other driver's headlights.
- Keep your headlights clean and properly aimed. (On vehicles not equipped with the automatic headlight aiming feature.) Dirty or improperly aimed headlights will make it much more difficult to see at night.
- Avoid staring directly at the headlights of oncoming vehicles. You could be temporarily blinded, and it will take several seconds for your eyes to readjust to the darkness.

Driving in the rain

Rain and wet roads can make driving dangerous, especially if you're not prepared for the slick pavement.

Here are a few things to consider when driving in the rain:

- A heavy rainfall will make it harder to see and will increase the distance needed to stop your vehicle, so slow down.
- Keep your windshield wiping equipment in good shape. Replace your windshield wiper blades when they show signs of streaking or missing areas on the windshield.
- If your tires are not in good condition, making a quick stop on wet pavement can cause a skid and possibly lead to an accident. Be sure your tires are in good shape.
- Turn on your headlights to make it easier for others to see you.

- Driving too fast through large puddles can affect your brakes. If you must go through puddles, try to drive through them slowly.
- If you believe you may have gotten your brakes wet, apply them lightly while driving until normal braking operation returns.

Driving in flooded areas

Avoid driving through flooded areas unless you are sure the water is no higher than the bottom of the wheel hub. Drive through any water slowly. Allow adequate stopping distance because brake performance may be affected.

After driving through water, dry the brakes by gently applying them several times while the vehicle is moving slowly.

⚠ WARNING

Water logged area
Avoid driving into or starting the vehicle in a heavily water logged area. Vehicle may breakdown or engine may fail due to water entering engine or short circuit of electrical systems. If vehicle stuck in deep water, do not start / crank the engine. Kia recommends to consult an authorized Kia dealer/service partner.

Driving on unpaved roads

Drive carefully on unpaved roads because your vehicle may be damaged by rocks or roots of trees. Become familiar with the on unpaved roads conditions where you are going to drive before you begin driving.

Highway driving

Tires

Adjust the tire inflation pressures to specification. Low tire inflation pressures will result in overheating and possible failure of the tires.
Avoid using worn or damaged tires which may result in reduced traction or tire failure.
Never exceed the maximum tire inflation pressure shown on the tires.

⚠ WARNING

Under/over inflated tires

Always check the tires for proper inflation before driving. Underinflated or overinflated tires can cause poor handling, loss of vehicle control, and sudden tire failure leading to accidents, injuries, and even death. For proper tire pressures, refer to "Tires and wheels" on page 9-6.

⚠ WARNING

Tire tread

Always check the tire tread before driving your vehicle. Worn-out tires can result in loss of vehicle control. Worn-out tires should be replaced as soon as possible. For further information and tread limits, refer to "Tires and wheels" on page 9-6.

Fuel, engine coolant and engine oil

High speed travel consumes more fuel than urban motoring. Do not forget to check both engine coolant and engine oil.

Drive belt

A loose or damaged drive belt may result in overheating of the engine.

Winter driving

Severe weather conditions in the winter result in greater wear and other problems.

To minimize the problems of winter driving, you should follow these suggestions:

Summer tires

Kia specifies summer tires on some models to provide superior performance on dry roads. Summer tire performance is substantially reduced in snow and ice. Summer tires do not have the tire traction rating M+S (Mud and Snow) on the tire side wall. if you plan to operate your vehicle in snowy or icy conditions, Kia recommends the use of snow tires or all season tires on all four wheels.

Snowy or icy conditions

To drive your vehicle in deep snow, it may be necessary to use snow tires or to install tire chains on your tires.

If snow tires are needed, it is necessary to select tires equivalent in size and type of the original equipment tires. Failure to do so may adversely affect the safety and handling of your vehicle. Furthermore, speeding, rapid acceleration, sudden brake applications, and sharp turns are potentially very hazardous practices.

During deceleration, use vehicle braking to the fullest extent. Sudden brake applications on snowy or icy roads may cause skids to occur. You need to keep sufficient distance between the vehicle in operation in front of your vehicle. Also, apply the brake gently. It should be noted that installing tire chains on the tire will provide a greater driving force, but will not prevent side skids.

Snow tires

If you mount snow tires on your vehicle, make sure they are radial tires of the same size and load range as the original tires. Mount snow tires on all four wheels to balance your vehicle's handling in all weather conditions. Keep in mind that the traction provided by snow tires on dry roads may not be as high as your vehicle's original equipment tires. You should drive cautiously even when the roads are clear. Check with the tire dealer for maximum speed recommendations.

⚠ WARNING

Snow tire size

Snow tires should be equivalent in size and type to the vehicle's standard tires. Otherwise, the safety and handling of your vehicle may be adversely affected.

Do not install studded tires without first checking local, state and municipal regulations for possible restrictions against their use.

Tire chains

Since the sidewalls of radial tires are thinner, they can be damaged by mounting some types of snow chains on them. Therefore, the use of snow tires is recommended instead of snow chains. Do not mount tire chains on vehicles equipped with aluminum wheels; snow chains may cause damage to the wheels. If snow chains must be used, use wire-type chains with a thickness of less than 12 mm. Damage to your vehicle caused by improper snow chain use is not covered by your vehicle manufacturers warranty.

Install tire chains only on the front tires.

⚠ CAUTION

- Make sure the snow chains are the correct size and type for your tires. Incorrect snow chains can cause damage to the vehicle body and suspension and may not be covered by your vehicle manufac¯turer warranty. Also, the snow chain connecting hooks may be damaged from contacting vehicle components causing the snow chains to come loose from the tire. Make sure the snow chains are SAE class "S" certified.
- Always check chain installation for proper mounting after driving approximately 0.5 to 1 km to ensure safe mounting. Retighten or remount the chains if they are loose.
- Even with the appropriate chain installed, do not make a full turn (turn the steering wheel fully to one side) when driving the vehicle. (If you are making a full turn, drive with the speed below 10 km/h.)

Chain installation

When installing chains, follow the manufacturer's instructions and mount them as tightly as you can. Drive slowly with chains installed. If you hear the chains contacting the body or chassis, stop and tighten them. If they still make contact, slow down until it stops. Remove the chains as soon as you begin driving on cleared roads.

⚠ WARNING

Mounting chains

When mounting snow chains, park the vehicle on level ground away from traffic. Turn on the vehicle Hazard Warning flashers and place a triangular emergency warning device behind the vehicle if available. Always place the vehicle in P (Park), apply the parking brake and turn off the engine before installing snow chains.

⚠ WARNING

Tire chains

- The use of chains may adversely affect vehicle handling.
- Do not exceed 30 km/h or the chain manufacturer's recom¯mended speed limit, whichever is lower.
- Drive carefully and avoid bumps, holes, sharp turns, and other road

hazards, which may cause the vehicle to bounce.
- Avoid sharp turns or locked wheel braking.

⚠ CAUTION

- Chains that are the wrong size or improperly installed can damage your vehicle's brake lines, suspension, body and wheels.
- Stop driving and retighten the chains any time you hear them hitting the vehicle.

Use high quality ethylene glycol coolant

Your vehicle is delivered with high quality ethylene glycol coolant in the cooling system. It is the only type of coolant that should be used because it helps prevent corrosion in the cooling system, lubricates the water pump and prevents freezing. Be sure to replace or replenish your coolant refer to "Normal maintenance schedule" on page 8-14. Before winter, have your coolant tested to assure that its freezing point is sufficient for the temperatures anticipated during the winter.

Check battery and cables

Winter puts additional burdens on the battery system. Visually inspect the battery and cables (refer to "For best battery service" on page 8-40). The level of charge in your battery can be checked by an authorized Kia dealer or a service station.

Change to "winter weight" oil if necessary

In some climates it is recommended that a lower viscosity "winter weight" oil be used during cold weather. Refer to "Recommended lubricants and capacities" on page 9-7 for recommendations. If you aren't sure what weight oil you should use, Kia recommends to consult an authorized Kia dealer/service partner.

Check spark plugs and ignition system

Inspect your spark plugs as described in "Scheduled maintenance service" on page 8-12 and replace them if necessary. Also check all ignition wiring and components to be sure they are not cracked, worn or damaged in any way.

To keep locks from freezing

To keep the locks from freezing, squirt an approved de-icer fluid or

glycerine into the key opening. If a lock is covered with ice, squirt it with an approved de-icing fluid to remove the ice. If the lock is frozen internally, you may be able to thaw it out by using a heated key. Handle the heated key with care to avoid injury.

Use approved window washer anti-freeze in system

To keep the water in the window washer system from freezing, add an approved window washer anti-freeze solution in accordance with instructions on the container. Window washer anti-freeze is available from an authorized Kia dealer and most auto parts outlets. Do not use vehicle coolant or other types of anti-freeze as these may damage the paint finish.

Don't let your parking brake freeze

Under some conditions your parking brake can freeze in the engaged position. This is most likely to happen when there is an accumulation of snow or ice around or near the rear brakes or if the brakes are wet. If there is a risk the parking brake may freeze, apply it only temporarily while you put the gear shift dial in P (Park) and block the rear wheels so the vehicle cannot roll. Then release the parking brake.

Don't let ice and snow accumulate underneath

Under some conditions, snow and ice can build up under the fenders and interfere with the steering. In severe winter conditions you should periodically check underneath the vehicle to be sure the movement of the front wheels and the steering components are not obstructed.

Carry emergency equipment

Depending on the severity of the weather, you should carry appropriate emergency equipment. Some of the items you may want to carry include tow straps or chains, flashlight, emergency flares, sand, shovel, jumper cables, window scraper, gloves, ground cloth, coveralls, blanket, etc.

Vehicle weight

This section will guide you in the proper loading of your vehicle and/or trailer, to keep your loaded vehicle weight within its design rating capability, with or without a trailer.

Properly loading your vehicle will provide maximum return of the vehicle design performance. Before loading your vehicle, familiarize yourself with the following terms for determining your vehicle's weight ratings, with or without a trailer, from the vehicle's specifications and the compliance label:

Base curb weight This is the weight of the vehicle including a full tank of fuel and all standard equipment. It does not include passengers, cargo, or optional equipment.

Vehicle curb weight This is the weight of your new vehicle when you picked it up from your dealer plus any aftermarket equipment.

Cargo weight This figure includes all weight added to the Base Curb Weight, including cargo and optional equipment.

GAW (Gross Axle Weight) This is the total weight placed on each axle (front and rear) – including vehicle curb weight and all payload.

GAWR (Gross Axle Weight Rating) This is the maximum allowable weight that can be carried by a single axle (front or rear). These numbers are shown on the compliance label. The total load on each axle must never exceed its GAWR.

GVW (Gross Vehicle Weight) This is the Base Curb Weight plus actual Cargo Weight plus passengers.

GVWR (Gross Vehicle Weight Rating) This is the maximum allowable weight of the fully loaded vehicle (including all options, equipment, passengers and cargo). The GVWR is shown on the certification label located on the driver's door sill.

⚠ CAUTION

Do not use replacement tires with lower load carrying capacities than the original tires because they may lower your vehicle's GVWR and GAWR limitations. Replacement tires with a higher limit than the original tires do not increase the GVWR and GAWR limitations.

Overloading

⚠ WARNING

Vehicle weight

The gross axle weight rating (GAWR) and the gross vehicle weight rating (GVWR) for your vehicle are on the certification label attached to the driver's (or front passenger's) door. Exceeding these ratings can cause an accident or vehicle damage. You can calculate the weight of your load by weighing the items (and people) before putting them in the vehicle. Be careful not to overload your vehicle.

What to do in an emergency 7

Road warning..... 7-3
• Hazard warning flasher..... 7-3
In case of an emergency while driving..... 7-4
• If the engine stalls at a crossroad or crossing..... 7-4
• If you have a flat tire while driving..... 7-4
• If the engine stalls while driving..... 7-4
If the engine will not start 7-5
• If the engine doesn't turn over or turns over slowly..... 7-5
• If engine turns over normally but does not start..... 7-5
Emergency starting..... 7-6
• Jump starting..... 7-6
• Push-starting..... 7-8
If the engine overheats..... 7-9
Tire Pressure Monitoring System (TPMS)..... 7-10
• Tire Pressure Indicator..... 7-11
• Low tire pressure telltale 7-12
• Tire Pressure Monitoring System (TPMS) malfunction indicator 7-14
• Tire replacement with TPMS..... 7-14
If you have a flat tire (with spare tire) 7-16
• Jack and tools..... 7-16
• Removing and storing the spare tire 7-17
• Changing tires 7-18
• Jack label..... 7-22
• EC Declaration of conformity Jack 7-23
Towing 7-24
• Towing service 7-24
• Removable towing hook..... 7-25

7 What to do in an emergency

• Emergency towing 7-26
Emergency commodity 7-29
• First aid kit 7-29
• Triangle reflector 7-29

WHAT TO DO IN AN EMERGENCY

Road warning

When in an emergency situation occurs while driving or when you park by the edge of the roadway, you must alert approaching or passing vehicles to be careful as they pass. For this, you should use the hazard warning flasher.

Hazard warning flasher

The hazard warning flasher serves as a warning to other drivers to exercise extreme caution when approaching, overtaking, or passing your vehicle.

It should be used whenever emergency repairs are being made or when the vehicle is stopped near the edge of a roadway.

Depress the flasher switch with the ignition switch in any position. The flasher switch is located in the center console switch panel. All turn signal lights will flash simultaneously.

- The hazard warning flasher operates whether your vehicle is running or not.
- The turn signals do not work when the hazard flasher is on.
- Care must be taken when using the hazard warning flasher while the vehicle is being towed.

In case of an emergency while driving

If an emergency situation occurs while driving, stay calm and take the following steps.

If the engine stalls at a crossroad or crossing

- If the engine stalls at a crossroad or crossing, set the shift lever in the N (Neutral) position and then push the vehicle to a safe place.
- If your vehicle has a manual transmission not equipped with a ignition lock switch, the vehicle can move forward by shifting to the 2 (Second) or 3 (Third) gear and then turning the starter without depressing the clutch pedal.

If you have a flat tire while driving

If a tire goes flat while you are driving:

1. Take your foot off the accelerator pedal and let the vehicle slow down while driving straight ahead. Do not apply the brakes immediately or attempt to pull off the road as this may cause a loss of control.
2. When the vehicle has slowed down to such a speed that it is safe to do so, brake carefully and pull off the road.
3. Park the vehicle at the side of road, do not stop or park the vehicle in middle of the road way. In case of divided roads, park the vehicle as much away from the driving lanes to avoid inconvenience to other vehicles and , easy operation of tire change as mentioned in page 7-15.
4. When the vehicle is stopped, turn on your emergency hazard flashers, set the parking brake and put the transmission in reverse (manual transmission).
5. Have all passengers get out of the vehicle. Be sure they all get out on the side of the vehicle that is away from traffic.
6. When changing a flat tire, follow the instruction provided later in "If you have a flat tire (with spare tire)" on page 7-16.

If the engine stalls while driving

1. Reduce your speed gradually, keeping a straight line. Move cautiously off the road to a safe place.
2. Turn on your emergency flashers.
3. Try to start the engine again. If your vehicle does not start, consult a professional workshop. Kia recommends to consult an authorized Kia dealer/service partner.

If the engine will not start

When the engine doesn't start, first check to see how much fuel there is and whether the battery is discharged.

If the engine doesn't turn over or turns over slowly

1. Check the battery connections to be sure they are clean and tight.
2. Turn on the interior light. If the light dims or goes out when you operate the starter, the battery is discharged.
3. Check the starter connections to be sure they are securely tightened.
4. Do not push or pull the vehicle to start it. See instructions for "Jump starting" on page 7-6.

⚠ WARNING

If the engine will not start, do not push or pull the vehicle to start it. This could result in a collision or cause other damage. In addition, push or pull starting may cause the catalytic converter to be overloaded and create a fire hazard.

If engine turns over normally but does not start

1. Check the fuel level.
2. With the ignition switch in the LOCK position, check all connectors at the ignition coils and spark plugs. Reconnect any that may be disconnected or loose.
3. Check the fuel line in the engine compartment.
4. If the engine still does not start, call a professional workshop. Kia recommends to call an authorized Kia dealer/service partner.

Emergency starting

When the vehicle will not start because of low battery power, you may need to jump start the vehicle.

Jump starting

Connect cables in numerical order and disconnect in reverse order.

Smartstream G1.4 T-GDi

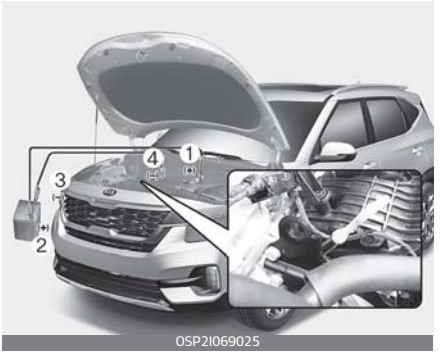

OSP2I069025

Smartstream G1.5

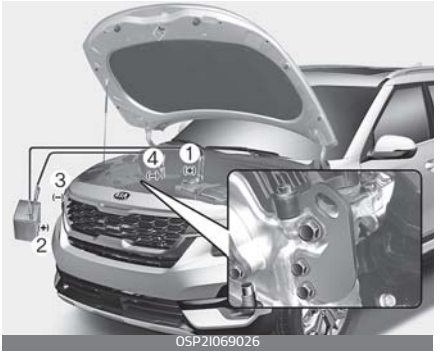

OSP2I069026

(Diesel) 1.5 VGT

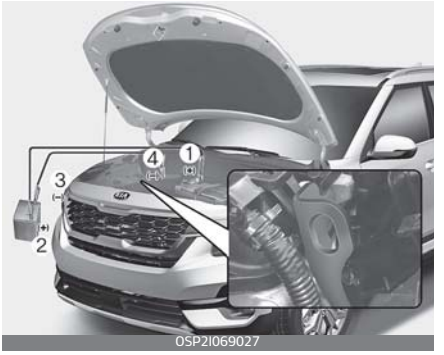

OSP2I069027

Jump starting can be dangerous if done incorrectly. Therefore, to avoid harm to yourself or damage to your vehicle or battery, follow the jump starting procedures. If in doubt, we strongly recommend that you have a competent technician or towing service jump start your vehicle.

⚠ CAUTION

Use only a 12-volt jumper system. You can damage a 12-volt starting motor, ignition system, and other electrical parts beyond repair by use of a 24- volt power supply (either two 12-volt batteries in series or a 24-volt motor generator set).

⚠ WARNING

Battery

Never attempt to check the electrolyte level of the battery as this may cause the battery to rupture or explode causing serious injury.

⚠ WARNING

Battery

- Keep all flames or sparks away from the battery. The battery produces hydrogen gas which may explode if exposed to flame or sparks.
  If these instructions are not followed exactly, serious personal injury and damage to the vehicle may occur! If you are not sure how to follow this procedure, seek qualified assistance. Automobile batteries contain sulfuric acid. This is poisonous and highly corrosive. When jump starting, wear protective glasses and be careful not to get acid on yourself, your clothing or on the vehicle.
- Do not attempt to jump start the vehicle if the discharged battery is frozen or if the electrolyte level is low; the battery may rupture or explode.
- Do not allow the (+) and (–) jumper cables to touch. It may cause sparks.
- The battery may rupture or explode when you jump start with a low or frozen battery.

Jump starting procedure

1. Make sure the booster battery is 12-volt and that its negative terminal is grounded.
   If the booster battery is in another vehicle, do not allow the vehicles come in contact.
2. Turn off all unnecessary electrical loads.
3. Open the engine hood and remove the service cover on the front passenger seat side in the engine compartment.
4. Remove the fuse box cover on the front passenger seat side in the engine compartment
5. Open the positive terminal cap inside the engine room fuse box and the negative terminal cap close to the vehicle body.
6. Connect the jumper cables in the exact sequence shown in the illustration.
   1) Connect one end of a jumper cable to the positive terminal of the discharged battery (1).
   2) Connect the other end to the positive terminal of the booster battery (2).
   3) Proceed to connect one end of the other jumper cable to the negative terminal of the booster battery (3), then the other end to a solid, stationary, metallic point (for example, the engine lifting bracket) away from the battery (4). Do not connect it to or near any part that moves when the engine is cranked.

Do not allow the jumper cables to contact anything except the correct battery terminals or the correct ground. Do not lean over the battery when making connections.

⚠ CAUTION

Battery cables

Do not connect the jumper cable from the negative terminal of the booster battery to the negative terminal of the discharged battery. This can cause the discharged battery to overheat and crack, releasing battery acid.

Make sure to connect one end of the jumper cable to the negative terminal of the booster battery, and the other end to a metalic point, far away from the battery.

Push-starting

Your Manual Transmission-equipped vehicle should not be push-started because it might damage the emission control system.

Vehicles equipped with Automatic Transmission/Dual Clutch Transmission/Intelligent Variable Transmission cannot be push-started. Follow the directions in this section for "Jump starting" on page 7-6.

⚠ WARNING

Never tow a vehicle to start it because the sudden surge forward when the engine starts could cause a collision with the tow vehicle.

If the engine overheats

If your temperature gauge indicates overheating, you will experience a loss of power, or hear loud pinging or knocking, the engine is probably too hot.

If this happens, you should:

1. Pull off the road and stop as soon as it is safe to do so.
2. Place the shift lever in P (Automatic Transmission/Dual Clutch Transmission/Intelligent Variable Transmission) or neutral (Manual Transmission) and set the parking brake.
3. If the air conditioning is on, turn it off.
4. If engine coolant is running out under the vehicle or steam is coming out from the hood, stop the engine. Do not open the hood until the coolant has stopped running or the steaming has stopped.
5. If there is no visible loss of engine coolant and no steam, leave the engine running and check to be sure the engine cooling fan is operating.
   1) If the fan is not running, turn the engine off.
6. Check to see if the water pump drive belt is missing.
   1) If it is not missing, check to see that it is tight.
   2) If the drive belt seems to be satisfactory, check for coolant leaking from the radiator, hoses or under the vehicle. (If the air conditioning had been in use, it is normal for cold water to be draining from it when you stop).

⚠ WARNING

While the engine is running, keep hair, hands and clothing away from moving parts such as the fan and drive belts to prevent injury.

7. If the water pump drive belt is broken or engine coolant is leaking out, stop the engine immediately and call the nearest authorized Kia dealer/service partner.

⚠ WARNING

Do not remove the radiator cap when the engine is hot. This can allow coolant to blow out of the opening and cause serious burns.

8. If you cannot find the cause of the overheating, wait until the engine temperature has returned to normal. If coolant has been lost, carefully add coolant to the reservoir to bring the fluid level in the reservoir up to the halfway mark.
9. Proceed with caution, keeping alert for further signs of overheating. If overheating happens again, call an authorized Kia dealer/service partner.

⚠ CAUTION

- Serious loss of coolant indicates there is a leak in the cooling system. In this case, have the system checked by a professional workshop. Kia recommends to visit an authorized Kia dealer/service partner.
- When the engine overheats from low engine coolant, suddenly adding engine coolant may cause cracks in the engine. To prevent damage, add engine coolant slowly in small quantities.

Tire Pressure Monitoring System (TPMS) (if equipped)

The Tire Pressure Monitoring System (TPMS) detects the pressure of vehicle's tires and displays it on the LCD display.

OSP2I069001

OSP2I049128

1. Low tire pressure telltale / TPMS malfunction indicator
2. Low tire pressure position telltale (Shown on the LCD display)

Tire Pressure Indicator

- You can check the tire pressure in the assist mode on the cluster.
  - Refer to "User settings mode" on page 4-57.
- Tire pressure is displayed 1~2 minutes later after driving.
- If tire pressure is not displayed when the vehicle is stopped, "Drive to display" message displays. After driving, check the tire pressure.
- You can change the tire pressure unit in the user settings mode on the cluster.
  - psi, kPa, bar (Refer to "User settings mode" on page 4-57).

Each tire, including the spare (if provided), should be checked monthly when cold and inflated to the inflation pressure recommended by the vehicle manufacturer on the vehicle placard or tire inflation pressure label.

(If your vehicle has tires of a different size than the size indicated on the vehicle placard or tire inflation pressure label, you should determine the proper tire inflation pressure for those tires.)

As an added safety feature, your vehicle has been equipped with a tire pressure monitoring system (TPMS) that illuminates a low tire pressure telltale when one or more of your tires is significantly under-inflated. Accordingly, when the low tire pressure telltale illuminates, you should stop and check your tires as soon as possible, and inflate them to the proper pressure. Driving on a significantly under-inflated tire causes the tire to overheat and can lead to tire failure. Under-inflation also reduces fuel efficiency and tire tread life, and may affect the vehicle's handling and stopping ability.

Please note that the TPMS is not a substitute for proper tire maintenance, and it is the driver's responsibility to maintain correct tire pressure, even if under-inflation has not reached the level to trigger illumination of the TPMS low tire pressure telltale.

Your vehicle has also been equipped with a TPMS malfunction indicator to indicate when the system is not operating properly. The TPMS malfunction indicator is combined with the low tire pressure telltale. When the system detects a malfunction, the telltale will flash for approximately 1 minute and then remain continuously illuminated. This sequence will continue upon subsequent vehicle start-ups as long as the malfunction exists. When the TPMS malfunction indicator remains illuminated after blinking for approximately 1 minute, the system may not be able to detect or signal low tire pressure as intended.

TPMS malfunctions may occur for a variety of reasons, including the installation of replacement or alternate tires or wheels on the vehicle that prevent the TPMS from functioning properly. Always check the TPMS malfunction telltale after replacing one or more tires or wheels on your vehicle to ensure that the replacement or alternate tires and wheels allow the TPMS to continue to function properly.

✻ NOTICE

If any of the below happens, have the system checked by a professional workshop. Kia recommends to visit an authorized Kia dealer/service partner.

1. The low tire pressure telltale/ TPMS malfunction indicator do not illuminate for 3 seconds when the ignition switch is turned to the ON position or engine is running.
2. The TPMS malfunction indicator remains illuminated after blinking for approximately 1 minute.
3. The Low tire pressure position telltale remains illuminated.

Low tire pressure telltale

Low tire pressure position telltale

When the tire pressure monitoring system warning indicators are illuminated and warning message displayed on the cluster LCD display, one or more of your tires is significantly under-inflated.

The low tire pressure position telltale light will indicate which tire is significantly under-inflated by illuminating the corresponding position light.

If either telltale illuminates, immediately reduce your speed, avoid hard cornering and anticipate increased stopping distances. You should stop and check your tires as soon as possible. Inflate the tires to the proper pressure as indicated on the vehicle's placard or tire inflation pressure label located on the driver's side center pillar outer panel. If you cannot reach a service station or if the tire cannot hold the newly

added air, replace the low pressure tire with a spare tire.

If you drive the vehicle for about 10 minutes at speeds above 25 km/h after replacing the low pressure tire with the spare tire, one of the following will happen:

- The TPMS malfunction indicator may blink for approximately 1 minute and then remain continuously illuminated because the TPMS sensor is not mounted on the spare wheel. (changed tire equipped with a sensor not in the vehicle)
- The TPMS malfunction indicator will remain continuously illuminated while driving because the TPMS sensor is not mounted on the spare wheel. (changed tire equipped with a sensor in the vehicle)

⚠ CAUTION

- In winter or cold weather, the low tire pressure telltale may illuminate if the tire pressure was adjusted to the recommended tire inflation pressure in warm weather. It does not mean your TPMS is malfunctioning because the decreased temperature leads to a lowering of tire pressure.
- When you drive your vehicle from a warm area to a cold area or from a cold area to a warm area, or the outside temperature is higher or lower, you should check the tire inflation pressure and adjust the tires to the recommended tire inflation pressure.
- When filling tires with more air, conditions to turn off the low tire pressure telltale may not be met. This is because a tire inflator has a margin of error in performance. The low tire pressure telltale will be turned off if the tire pressure is above the recommended tire inflation pressure.

⚠ WARNING

Low pressure damage

Significantly low tire pressure makes the vehicle unstable and can contribute to loss of vehicle control and increased braking distances.

Continued driving on low pressure tires can cause the tires to overheat and fail.

Tire Pressure Monitoring System (TPMS) malfunction indicator

The TPMS malfunction indicator will illuminate after it blinks for approximately one minute when there is a problem with the Tire Pressure Monitoring System.

In this case, have the system checked by a professional workshop to determine the cause of the problem. Kia recommends to visit an authorized Kia dealer/service partner.

NOTICE

If there is a malfunction with the TPMS, the low tire pressure position telltale will not be displayed even though the vehicle has an underinflated tire.

CAUTION

- The TPMS malfunction indicator may blink for approximately 1 minute and then remain continuously illuminated if the vehicle is moving around electric power supply cables or radios transmitter such as at police stations, government and public offices, broadcasting stations, military installations, airports, or transmitting towers, etc. This can interfere with normal operation of the Tire Pressure Monitoring System (TPMS).
- The TPMS malfunction indicator may blink for approximately 1 minute and then remain continuously illuminated if snow chains are used or some separate electronic devices such as notebook computer, mobile charger, remote starter or navigation etc., are used in the vehicle.
  This can interfere with normal operation of the Tire Pressure Monitoring System (TPMS).

Tire replacement with TPMS

If you have a flat tire, the low Tire Pressure and Position telltales will come on.

In this case, have the system checked by a professional workshop. Kia recommends to visit an authorized Kia dealer/service partner.

CAUTION

We recommend that you use the sealant approved by Kia.

The sealant on the tire pressure sensor and wheel shall be eleminated when you replace the tire with a new one.

Each wheel is equipped with a tire pressure sensor mounted inside the tire behind the valve stem. You must use TPMS specific wheels. Have your tires serviced by a professional workshop. Kia recommends to visit an authorized Kia dealer/service partner.

If you drive the vehicle for about 10 minutes at speeds above 25 km/h after replacing the low pressure tire with the spare tire, one of the following will happen:

- The TPMS malfunction indicator may blink for approximately 1 minute and then remain continuously illuminated because the TPMS sensor is not mounted on the spare wheel. (changed tire equipped with a sensor not in the vehicle)
- The TPMS malfunction indicator will remain continuously illuminated while driving because the TPMS sensor is not mounted on the spare wheel. (changed tire equipped with a sensor in the vehicle)

You may not be able to identify a low tire by simply looking at it. Always use a good quality tire pressure gauge to measure the tire's inflation pressure. Please note that a tire that is hot (from being driven) will have a higher pressure measurement than a tire that is cold (from sitting stationary for at least 3 hours and driven less than 1.6 km (1 mile) during that 3 hour period).

Allow the tire to cool before measuring the inflation pressure. Always be sure the tire is cold before inflating to the recommended pressure.

A cold tire means the vehicle has been sitting for 3 hours and driven for less than 1.6 km (1 mile) in that 3 hour period.

⚠ CAUTION

We recommend that you use the sealant approved by Kia if your vehicle is equipped with a Tire Pressure Monitoring System. The liquid sealant can damage the tire pressure sensors.

⚠ WARNING

TPMS

- The TPMS cannot alert you to severe and sudden tire damage caused by external factors such as nails or road debris.
- If you feel any vehicle instability, immediately take your foot off the accelerator, apply the brakes gradually and with light force, and slowly move to a safe position off the road.

⚠ WARNING

Protecting TPMS

Tampering with, modifying, or disabling the Tire Pressure Monitoring System (TPMS) components may interfere with the system's ability to warn the driver of low tire pressure conditions and/or TPMS malfunctions. Tampering with, modifying, or disabling the Tire Pressure Monitoring System (TPMS) components may void the warranty for that portion of the vehicle.

If you have a flat tire (with spare tire)

Jack and tools

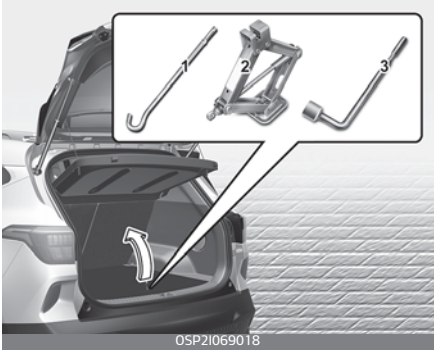

The jack, jack handle, wheel lug nut wrench are stored in the luggage compartment.

Pull up the luggage box cover to reach this equipment.
1. Jack handle
2. Jack
3. Wheel lug nut wrench

Jacking instructions

The jack is provided for emergency tire changing only.

To prevent the jack from "rattling" while the vehicle is in motion, store it properly.

Follow jacking instructions to reduce the possibility of personal injury.

⚠ WARNING

Changing tires

- Never attempt vehicle repairs in the traffic lanes of a public road or highway.
- Always move the vehicle completely off the road and onto the shoulder before trying to change a tire. The jack should be used on level firm ground. If you cannot find a firm, level place off the road, call a towing service company for assistance.
- Be sure to use the correct front and rear jacking positions on the vehicle; never use the bumpers or any other part of the vehicle for jacking support.
- The vehicle can easily roll off the jack causing serious injury or death.
- Do not get under a vehicle that is supported by a jack.
- Do not start or run the engine while the vehicle is on the jack.
- Do not allow anyone to remain in the vehicle while it is on the jack.
- Make sure any children present are in a secure place away from the road and from the vehicle to be raised with the jack.

Removing and storing the spare tire

Turn the tire hold-down wing bolt counterclockwise to remove.

Store the tire in the reverse order of removal.

To prevent the spare tire and tools from "rattling" while the vehicle is in motion, store them properly.

⚠ WARNING

Ensure the spare tire retainer is properly aligned with the center of the spare tire to prevent the spare tire from "rattling".

Otherwise, it may cause the spare tire to fall off the carrier and lead to an accident.

Changing tires

1. Park on a level surface and apply the parking brake firmly.

OSP21069002

2. Move the shift lever into R (Reverse) with Manual Transmission or P (Park) with Automatic Transmission/Dual Clutch Transmission/Intelligent Variable Transmission.
3. Activate the hazard warning flasher.
4. Remove the wheel lug nut wrench, jack, jack handle, and spare tire from the vehicle.
5. Block both the front and rear of wheel that is diagonally opposite the jack position.

OSP21069003

⚠ WARNING

Changing a tire

- To prevent vehicle movement while changing a tire, always set the parking brake fully, and always block the wheel diagonally opposite the wheel being changed.
- We recommend that the wheels of the vehicle be chocked, and that no person remain in a vehicle that is being jacked.

6. Loosen the wheel lug nuts counterclockwise one turn each, but do not remove any nut until the tire has been raised off the ground.

OSP21069004

7. Place the jack at the front (1) or rear (2) jacking position closest to the tire you are changing. Place the jack at the designated locations under the frame. The jacking positions are plates welded to the frame with two tabs and a raised dot to index with the jack.

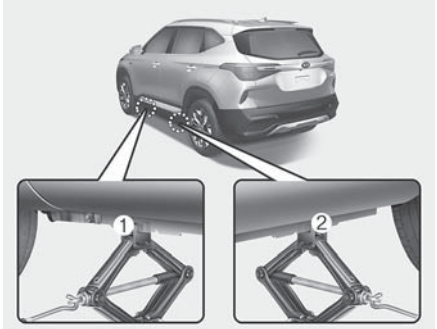

OSP2I069005

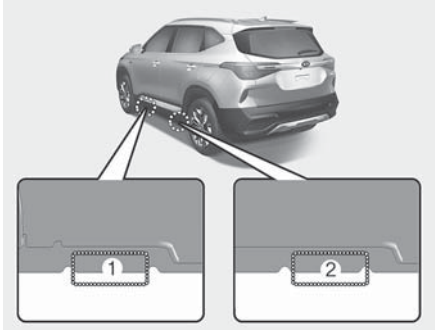

OSP2I060006

⚠ WARNING

Jack location

To reduce the possibility of injury, be sure to use only the jack provided with the vehicle and in the correct jack position; never use any other part of the vehicle for jack support.

8. Insert the jack handle into the jack and turn it clockwise, raising the vehicle until the tire just clears the ground. This measurement is approximately 30 mm (1.2 in). Before removing the wheel lug nuts, make sure the vehicle is stable and that there is no chance for movement or slippage.

OSP2I069007

9. Loosen the wheel nuts and remove them with your fingers. Slide the wheel off the studs and lay it flat so it cannot roll away. To put the wheel on the hub, pick up the spare tire, line up the holes with the studs and slide the wheel onto them.
If this is difficult, tip the wheel slightly and get the top hole in the wheel lined up with the top stud. Then jiggle the wheel back and forth until the wheel can be slid over the other studs.

⚠ WARNING

Wheels may have sharp edges. Handle them carefully to avoid possible severe injury. Before putting the wheel into place, be sure that there is nothing on the hub or wheel (such as mud, tar, gravel, etc.) that interferes with the wheel from fitting solidly against the hub.

If there is, remove it. If there is not good contact on the mounting surface between the wheel and hub, the wheel nuts could come loose and cause the loss of a wheel. Loss of a wheel may result in loss of control of the vehicle. This may cause serious injury or death.

Important – use of compact spare tire (if equipped)

Your vehicle is equipped with a compact spare tire. This compact spare tire takes up less space than a regular- size tire. This tire is smaller than a conventional tire and is designed for temporary use only.

⚠ CAUTION

- You should drive carefully when the compact spare is in use. The compact spare should be replaced by the proper conventional tire and rim at the first opportunity.
- The operation of this vehicle is not recommended with more than one compact spare tire in use at the same time.

⚠ WARNING

The compact spare tire is for emergency use only. Do not operate your vehicle on this compact spare at the speed over 80 km/h (50 mph). The original tire should be repaired or replaced as soon as possible to avoid failure of the spare possibly leading to personal injury or death.

The compact spare should be inflated to 420 kPa (60 psi).

NOTICE

Check the inflation pressure after installing the spare tire. Adjust it to the specified pressure, as necessary.

When using a compact spare tire, observe the following precautions:

- Under no circumstances should you exceed 80 km/h (50 mph); a higher speed could damage the tire.
- Ensure that you drive slowly enough to avoid all hazards. Any road hazard, such as a pothole or debris, could seriously damage the compact spare.
- Any continuous road use of this tire could result in tire failure, loss of vehicle control, and possible personal injury.
- Do not exceed the vehicle's maximum load rating or the load-carrying capacity shown on the sidewall of the compact spare tire.
- Avoid driving over obstacles. The compact spare tire diameter is smaller than the diameter of a conventional tire and reduces the ground clearance approximately 2.5 cm (1 inch), which could result in damage to the vehicle.
- Do not take the vehicle through an automatic car wash while the compact spare tire is installed.
- Do not use tire chains on the temporary compact tire. Because of the smaller size, a tire chain will not fit properly. This could damage the vehicle and result in loss of the chain.
- Temporary compact tire should not be installed on the front axle if the vehicle must be driven in snow or on ice.
- Do not use the temporary compact tire on any other vehicle because this tire has been designed especially for your vehicle.
- The temporary compact tire tread life is shorter than a regular tire. Inspect your temporary compact tire regularly and replace worn compact spare tires with the same size and design, mounted on the same wheel.
- The temporary compact tire should not be used on any other wheels, nor should standard tires, snow tires, wheel covers or trim rings be used with the temporary compact spare wheel. If such use is attempted, damage to these items or other car components may occur.
- Do not use more than one temporary compact tire at a time.
- Do not tow a trailer while the temporary compact tire is installed.

Jack label

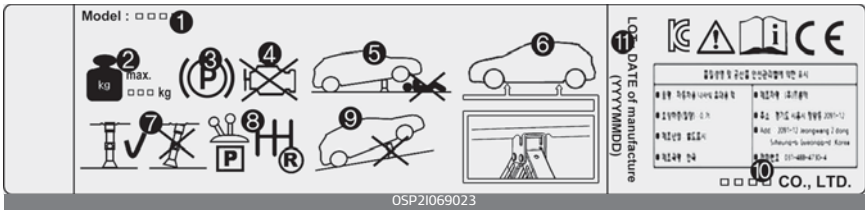

OSP2I069023

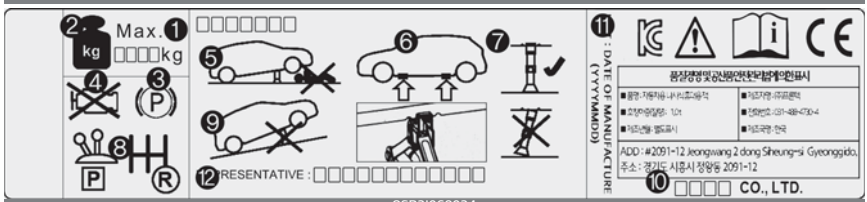

OSP2I069024

* The actual jack label in the vehicle may differ from the illustration. For more detailed specifications, refer to the label attached to the jack.

1. Jack type
2. Maximum allowable load
3. When using the jack, set your parking brake.
4. When using the jack, stop the engine.
5. Do not get under a vehicle that is supported by a jack.
6. The designated locations under the frame
7. When supporting the vehicle, the base plate of jack must be vertical under the lifting point.
8. Move the shift lever to the P position on vehicles with intelligent variable transmission.
9. The jack should be used on firm level ground.
10. Jack manufacturer
11. Production date
12. Representative company and address

EC Declaration of conformity Jack

SATHYA AUTO PRIVATE LIMITED

Works / Regd. Office : Plant-1

No. 133, SIDCO Industrial Estate, Thirumazhisai, Chennai - 600 124. Ph : +91 44 26810211

CE

EC Declaration of Conformity

according to EC Machinery Directive 2006/42/EC

We. SATHYA AUTO PRIVATE LTD.

133, SIDCO INDUSTRIAL ESTATE, CHENNAI, PINCODE: 600124, TAMIL NADU, INDIA.

declare under our sole responsibility that the product

Product : JACK –ASSY

Type Designation(s) : 700KG, 800KG, 1000KG

Serial No. : N/A (prototype)

Year of Manufacture : 2013

to which this declaration relates is in conformity with the following standard(s) or other normative document(s).

EN ISO12100 (2010) Safety of machinery – General principles for design – Risk assessment and risk reduction

EN ISO12100-2/A1 (2009) Safety of Machinery – Basic concepts, general principles for design, Part2 : Technical principles

EN 1494/A1 (2008) Mobile or movable jacks and associated lifting equipment

Following the provisions of Directive(s):

2006/42/EC Directive on the approximation of the laws of Member States relating to machinery (OJ L157 Jun , 9, 2006)

Sathya Auto Private limited , Chennai, India / 21.8.2013 R.MOHAN, Managing Director

(Place and date of issue) (Name and signature or equivalent marking of authorised person)

- T.C.F Compiling Person: QS Zurich AG,
- P.O. Box 8335, CH-8050 Zurich

Works : Plant-II
No. 14, SIDCO Industrial Estate,
Thirumazhisai, Chennai - 600 124.
Ph : +91 44 26810212

Works : Plant-III
S.No. 866/2, Village No. 126/230,
Hussain Nagar, Mappedu B Village,
Thiruvallur Taluk & Dist., Tamilnadu.

Telefax : +91 44 26810211/216 Website : www.sathyaauto.com E-mail : info@sathyaauto.com

OSP2I069021

7

Towing

Towing service

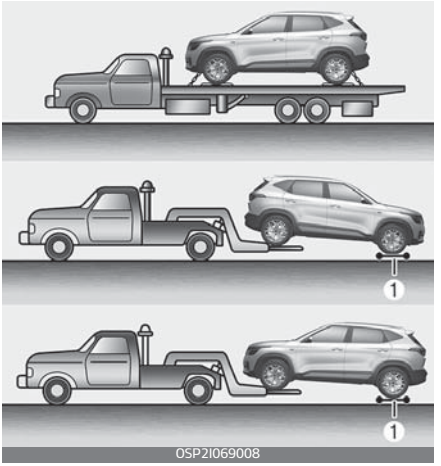

1. dollies

If emergency towing is necessary, we recommend having it done by an authorized Kia dealer or a commercial tow-truck service. Proper lifting and towing procedures are necessary to prevent damage to the vehicle. The use of wheel dollies (1) or flatbed is recommended.

It is acceptable to tow the vehicle with the rear wheels on the ground (without dollies) and the front wheels off the ground.

If any of the loaded wheels or suspension components are damaged or the vehicle is being towed with the front wheels on the ground, use a towing dolly under the front wheels.

When being towed by a commercial tow truck and wheel dollies are not used, the front of the vehicle should always be lifted, not the rear.

⚠ CAUTION

- Do not tow the vehicle backwards with the front wheels on the ground as this may cause damage to the vehicle.
- Do not tow with sling-type equipment. Use wheel lift or flatbed equipment.
- Do not tow the vehicle with four wheels in contact with the ground if it is the vehicle equipped with DCT or IVT or AT. Otherwise, the transmission will be seriously damaged. Also, make sure not to tow the vehicle connecting it with other vehicles including camper vans.

When towing your vehicle in an emergency without wheel dollies:

1. Set the ignition switch in the ACC position.
2. Place the transmission shift lever in N (Neutral).
3. Release the parking brake.

⚠ CAUTION

Failure to place the transmission shift lever in N (Neutral) may cause internal damage to the transmission.

Removable towing hook (if equipped)

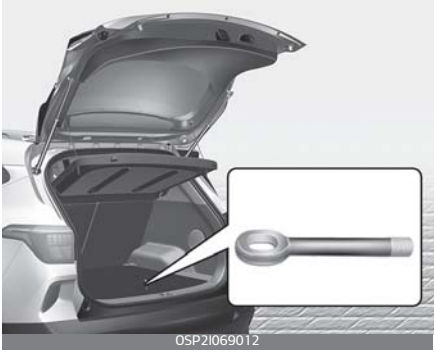
OSP2I069012

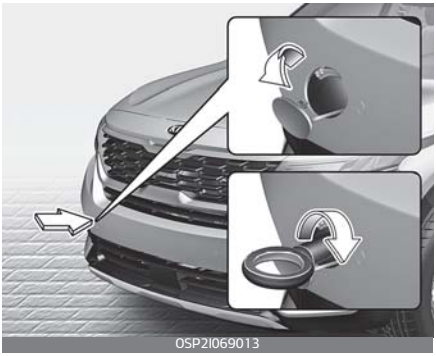
OSP2I069013

1. Open the tailgate, and remove the towing hook from the tool case.
2. Remove the hole cover pressing the lower part of the cover on the bumper.
3. Install the towing hook by turning it clockwise into the hole until it is fully secured.
4. Remove the towing hook and install the cover after use.

Emergency towing

OSP2I069014

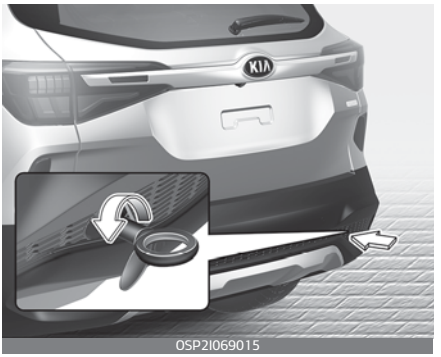

OSP2I069015

If towing is necessary, we recommend you to have it done by an authorized Kia dealer or a commercial tow truck service.

If towing service is not available in an emergency, your vehicle may be temporarily towed using a cable or chain secured to the emergency towing hook under the front (or rear) of the vehicle. Use extreme caution when towing the vehicle. A driver must be in the vehicle to steer it and operate the brakes.

Towing in this manner may be done only on hard-surfaced roads for a short distance and at low speed. Also, the wheels, axles, power train, steering and brakes must all be in good condition.

- Do not use the tow hooks to pull a vehicle out of mud, sand or other conditions from which the vehicle cannot be driven out under its own power.
- Avoid towing a vehicle heavier than the vehicle doing the towing.
- The drivers of both vehicles should communicate with each other frequently.

⚠ CAUTION

- Attach a towing strap to the tow hook.
- Using a portion of the vehicle other than the tow hooks for towing may damage the body of your vehicle.
- Use only a cable or chain specifically intended for use in towing vehicles. Securely fasten the cable or chain to the towing hook provided.
- Accelerate or decelerate the vehicle in a slow and gradual manner while maintaining tension on the tow rope or chain to start or drive the vehicle, otherwise tow hooks and the vehicle may be damaged.

- Before emergency towing, check if the hook is not broken or damaged.
- Fasten the towing cable or chain securely to the hook.
- Do not jerk the hook. Apply it steadily and with even force.
- To avoid damaging the hook, do not pull from the side or at a vertical angle. Always pull straight ahead.

⚠ WARNING

Use extreme caution when towing the vehicle.

- Avoid sudden starts or erratic driving maneuvers which would place excessive stress on the emergency towing hook and towing cable or chain. The hook and towing cable or chain may break and cause serious injury or damage.
- If the disabled vehicle is unable to be moved, do not forcibly continue the towing. We recommend that you contact an authorized Kia dealer or a commercial tow truck service for assistance.
- Tow the vehicle as straight ahead as possible.
- Keep away from the vehicle during towing.

- Use a towing strap less than 5 m (16 feet) long. Attach a white or red cloth (about 30 cm (12 inches) wide) in the middle of the strap for easy visibility.

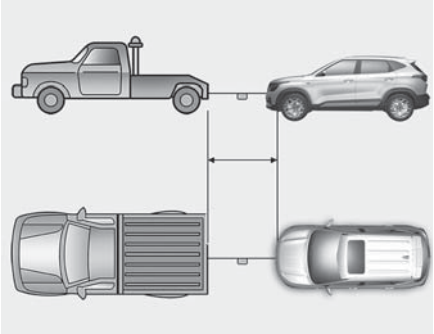

OSP2I069016

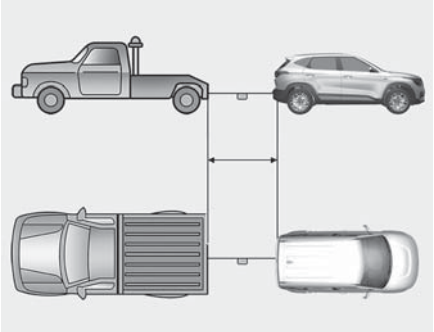

OSP2I069017

- Drive carefully so that the towing strap is not loosened during towing.
- The driver must be in the vehicle for steering and braking operations when the vehicle is towed and passengers other than the driver must not be allowed to be on board.

Emergency towing precautions

- Turn the ignition switch to ACC so the steering wheel isn't locked.
- Place the transmission shift lever in N (Neutral).
- Release the parking bake.
- Press the brake pedal with more force than normal since you will have reduced brake performance.
- More steering effort will be required because the power steering system will be disabled.
- If you are driving down a long hill, the brakes may overheat and brake performance will be reduced. Stop often and let the brakes cool off.
- The vehicle should be towed at a speed of 25 km/h (15 mph) or less within the distance of 20 km (12 miles).

⚠ CAUTION

Automatic transmission / Dual clutch transmission / Intelligent variable transmission

- If the car is being towed with all four wheels on the ground, it can be towed only from the front. Be sure that the transmission is in neutral. Be sure the steering is unlocked by placing the ignition switch in the ACC position. A driver must be in the towed vehicle to operate the steering and brakes.
- To avoid serious damage to the automatic transmission / dual clutch transmission / intelligent variable transmission, limit the vehicle speed to 15 km/h (10 mph) and drive less than 1.5 km (1 mile) when towing.
- Before towing, check the automatic transmission / dual clutch transmission / intelligent variable transmission for fluid leaks under your vehicle. If the automatic transmission / dual clutch transmission / intelligent variable transmission fluid is leaking, flatbed equipment or a towing dolly must be used.

Emergency commodity (if equipped)

There are some emergency commodities in the vehicle to help you respond to the emergency situation.

First aid kit

There are some items such as bandage and adhesive tape and etc. in the kit to give first aid to an injured person.

Triangle reflector

Place the triangle reflector on the road to warn oncoming vehicles during emergencies, such as when the vehicle is parked by the roadside due to any problems.

Maintenance 8

Engine compartment **8-5**
Maintenance services **8-8**
Owner maintenance **8-10**
Scheduled maintenance service **8-12**
Explanation of scheduled maintenance items **8-18**
Engine oil and filter (for gasoline (petrol)) **8-23**
• Checking the engine oil level 8-23
• Changing the engine oil and filter 8-25
Engine oil (for diesel) **8-25**
• Checking the engine oil level 8-25
• Changing the engine oil and filter 8-26
Engine coolant **8-27**
• Checking the coolant level 8-28
• Changing the coolant 8-30
Brake/clutch fluid **8-30**
• Checking the brake/clutch fluid level 8-30
Washer fluid **8-32**
• Checking the washer fluid level 8-32
PARKING BRAKE **8-33**
• Checking the parking brake 8-33
Fuel Filter (for diesel) **8-33**
• Draining water from the fuel filter 8-33
• Fuel filter cartridge replacement 8-34
Air cleaner filter **8-34**
• Replacing air cleaner filter 8-34
Climate control air filter **8-36**
• Inspecting and replacing climate control air filter 8-36

8 Maintenance

Wiper blades **8-37**
• Front windshield wiper blade 8-38
• Replacing front windshield wiper blade 8-38
• Replacing rear window wiper blade 8-39
Battery **8-40**
Tires and wheels **8-43**
• Checking tire inflation pressure 8-45
• Tire rotation 8-45
• Wheel alignment and tire balance 8-46
• Tire replacement 8-47
• Compact spare tire replacement 8-47
• Wheel replacement 8-47
• Tire traction 8-48
• Tire maintenance 8-48
• Tire sidewall labeling 8-48
• Tire terminology and definitions 8-52
• All season tires 8-55
• Summer tires 8-55
• Snow tires 8-55
• Tire chains 8-56
• Radial-ply tires 8-56
• Low aspect ratio tire 8-57
Fuses **8-58**
• Replacing inner panel fuse 8-60
• Replacing engine compartment fuse 8-61
Light bulbs **8-71**
• Headlamp bulb 8-76

Maintenance 8

- Replacing headlamp (low/high) / turn signal lamp / position lamp / daytime running lamp bulb (bulb type) (headlamp type A) 8-76
- Replacing headlamp (low/high) / turn signal lamp bulb (bulb type) (headlamp type B) 8-77
- Replacing position lamp / daytime running lamp (LED type) (headlamp type B) 8-78
- Replacing headlamp (high and low) / position lamp / daytime running lamp / turn signal lamp (LED type) (headlamp type C) 8-78
- Replacing position lamp (auxiliary) (LED type) 8-78
- Replacing front fog lamp (bulb/LED type) 8-79
- Replacing side repeater lamp (LED Type) bulb 8-80
- Replacing side repeater lamp bulb (bulb type) 8-80
- Replacing rear turn signal lamp / back up lamp bulb / tail lamp / tail and stop lamp bulb (bulb type) (rear combination lamp type A, B) 8-81
- Replacing stop lamp / tail and stop lamp (LED type) (rear combination lamp type B) 8-82
- Replacing High Mounted Stop Lamp bulb (bulb type) 8-82
- Replacing license plate lamp bulb 8-83
- Replacing map lamp (bulb type) bulb 8-84
- Replacing map lamp (LED type) bulb 8-84
- Replacing room lamp (bulb type) bulb 8-85
- Replacing room lamp (LED type) bulb 8-85
- Replacing luggage room lamp (bulb type) bulb 8-86

Appearance care 8-86

- Exterior care 8-86
- Interior care 8-92

Emission control system 8-94

8 Maintenance

• Lean NOx Trap.....8-99

MAINTENANCE

Engine compartment

Open the hood to see the engine compartment.

Smartstream G1.4 T-GDi

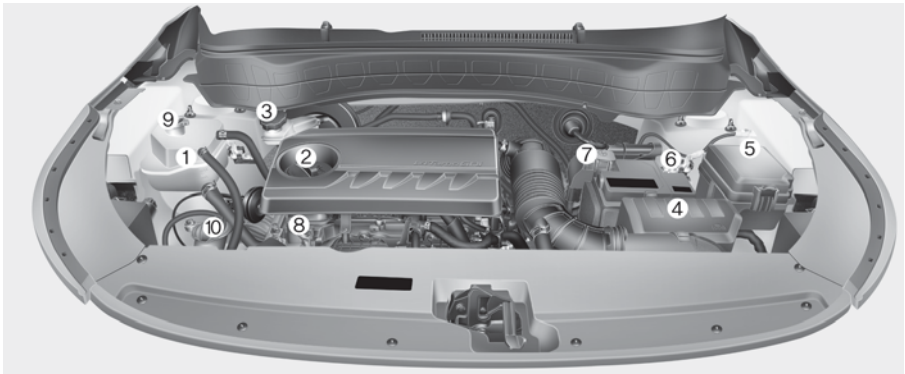

OSP2I079001

* The actual engine room in the vehicle may differ from the illustration.

1. Engine coolant reservoir
2. Engine oil filler cap
3. Brake/clutch fluid reservoir
4. Air cleaner
5. Fuse box
6. Negative battery terminal
7. Positive battery terminal
8. Engine oil dipstick
9. Radiator cap
10. Windshield washer fluid reservoir

Smartstream G1.5

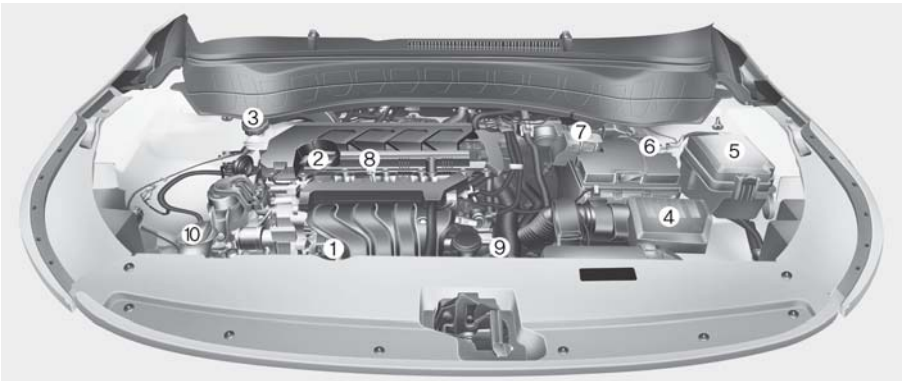

OSP2I079003

* The actual engine room in the vehicle may differ from the illustration.

1. Engine coolant reservoir
2. Engine oil filler cap
3. Brake/clutch fluid reservoir
4. Air cleaner
5. Fuse box
6. Negative battery terminal
7. Positive battery terminal
8. Engine oil dipstick
9. Radiator cap
10. Windshield washer fluid reservoir

(Diesel) 1.5 VGT

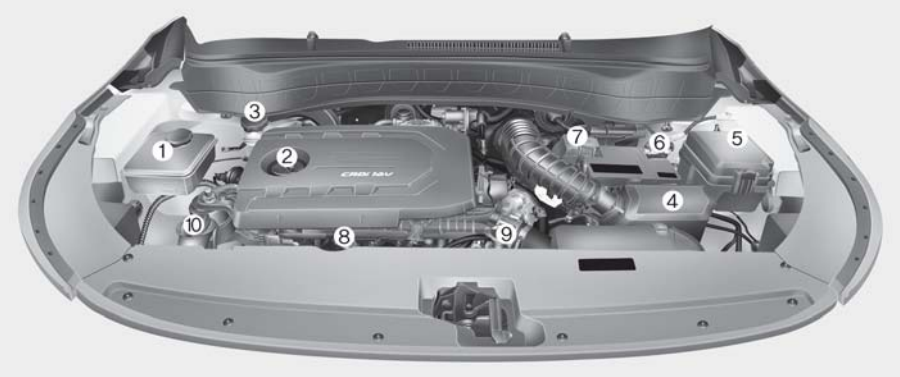

OSP2I079004

* The actual engine room in the vehicle may differ from the illustration.

1. Engine coolant reservoir
2. Engine oil filler cap
3. Brake/clutch fluid reservoir
4. Air cleaner
5. Fuse box
6. Negative battery terminal
7. Positive battery terminal
8. Engine oil dipstick
9. Radiator cap
10. Windshield washer fluid reservoir

Maintenance services

You should exercise the utmost care to prevent damage to your vehicle and injury to yourself whenever performing any maintenance or inspection procedures.

Should you have any doubts concerning the inspection or servicing of your vehicle, we strongly recommend that you have an authorized Kia dealer perform this work.

An authorized Kia dealer has factory-trained technicians and genuine Kia parts to service your vehicle properly. For expert advice and quality service, see an authorized Kia dealer.

Inadequate, incomplete or insufficient servicing may result in operational problems with your vehicle that could lead to vehicle damage, an accident, or personal injury.

Owner's responsibility

NOTICE

Maintenance Service and Record Retention are the owner's responsibility.

You should retain documents that show proper maintenance has been performed on your vehicle in accordance with the scheduled maintenance service charts shown on the following pages. You need this information to establish your compliance with the servicing and maintenance requirements of your vehicle warranties.

Detailed warranty information is provided in your Warranty & Consumer Information manual.

Repairs and adjustments required as a result of improper maintenance or a lack of required maintenance are not covered.

We recommend you have your vehicle maintained and repaired by an authorized Kia dealer/service partner. Authorized Kia dealers meet Kia's high service quality standards and receive technical support from Kia in order to provide you with a high level of service satisfaction.

Owner maintenance precautions

Improper or incomplete service may result in problems. This section gives instructions only for the maintenance items that are easy to perform.

As explained earlier in this section, several procedures can be done only by an authorized Kia dealer with special tools.

NOTICE

Improper owner maintenance during the warranty period may affect warranty coverage. For details, read the separate Warranty & Consumer Information manual provided with the vehicle. If you're unsure about any servicing or maintenance procedure, we recommend that the system be serviced by a professional workshop. Kia recommends to visit an authorized Kia dealer/service partner.

WARNING

Maintenance work

Do not wear jewelry or loose clothing while working under the hood of your vehicle with the engine running. These items can become entangled in moving parts, if you must run the vehicle in the engine while working under the hood, make certain that you remove all jewelry (especially rings, bracelets, watches, and necklaces) and all neckties, scarves, and similar loose clothing before getting near cooling fans.

WARNING

Touching metal parts

Do not touch metal parts (including strut bars) while the vehicle is operating or hot. Doing so could result in serious bodily injury. Turn the vehicle off and wait until the metal parts cool down to perform maintenance work on the vehicle.

Owner maintenance

The following lists detail the vehicle checks and inspections that should be performed by the owner or an authorized Kia dealer. They should be performed at the indicated frequencies to help ensure the safe and dependable operation of your vehicle.

Any adverse conditions should be brought to the attention of your dealer as soon as possible.

These owner maintenance checks are generally not covered by warranties and you may be charged for labor, parts and lubricants used.

When you stop for fuel:

- Check the engine oil level.
- Check the coolant level in coolant reservoir.
- Check the windshield washer fluid level.
- Look for low or under-inflated tires. Check if the front of the radiator and condenser are clean and not blocked with leaves, dirt or insects etc. If any of the above parts are extremely dirty or you are not sure of their condition, we recommend that you contact a professional workshop. Kia recommends to visit an authorized Kia dealer/service partner.

⚠ WARNING

Hot coolant

Be careful when checking your engine coolant level when the engine is hot. Scalding hot coolant and steam may blow out under pressure.

While operating your vehicle:

- Check for vibrations in the steering wheel. Notice any increased steering effort or looseness in the steering wheel, or change in its straight-ahead position.
- Notice if your vehicle constantly turns slightly or "pulls" to one side when traveling on smooth, level road.
- When stopping, listen and check for unusual sounds, pulling to one side, increased brake pedal travel or "hard-to-push" brake pedal.
- If any slipping or changes in the operation of your transmission occurs, check the transmission fluid level.
- Check the Intelligent Variable Transmission (IVT) P (Park) function.
- Check the parking brake.
- Check for fluid leaks under your vehicle (water dripping from the air conditioning system during or after use is normal).

At least monthly:

- Check the coolant level in the coolant reservoir.
- Check the operation of all exterior lights, including the stoplights, turn signals and hazard warning flashers.
- Check the inflation pressures of all tires including the spare for tires that are worn, show uneven wear, or are damaged.
- Check for loose wheel lug nuts.

At least twice a year (i.e., every Spring and Fall):

- Check the radiator, heater and air conditioning hoses for leaks or damage.
- Check the windshield washer spray and wiper operation. Clean the wiper blades with clean cloth dampened with washer fluid.
- Check the headlight alignment.
- Check the lap/shoulder belts for wear and function.

At least once a year:

- Clean the body and door drain holes.
- Lubricate the door hinges and check the hood hinges.
- Lubricate the door and hood locks and latches.
- Lubricate the door rubber weatherstrips.
- Check the air conditioning system.
- Inspect and lubricate Intelligent Variable Transmission (IVT) linkage and controls.
- Clean the battery and terminals.
- Check the brake/clutch fluid level.
- Visually inspect steering, suspension, and chassis components for damaged, loose, or missing parts or signs of wear.

Scheduled maintenance service

Follow the Normal maintenance schedule if the vehicle is usually operated where none of the following conditions apply.

Follow the Maintenance Under Severe Usage Conditions if any of the following conditions apply.

- Repeated driving short distance of less than 8 km in normal temperature or less than 16 km in freezing temperature.
- Extensive engine idling or low speed driving for long distances.
- Driving on rough, dusty, muddy, unpaved, graveled or salt-spread roads.
- Driving in areas using salt or other corrosive materials or in very cold weather.
- Driving in heavy dust condition.
- Driving in heavy traffic area.
- Driving on uphill, downhill, or mountain road repeatedly.
- Using for towing or camping and driving with loading on the roof.
- Vehicle towing, driving for patrol car, taxi, or other commercial use.
- Frequently driving under high speed or rapid acceleration.
- Frequently driving in stop-and-go condition.
- Engine oil usage which is not recommended (Mineral type, Semi-synthetic, Lower grade spec, etc.).

If your vehicle is operated in any of the prior listed conditions, you should inspect, replace or refill more frequently, using the severe usage maintenance schedule instead of the normal usage maintenance schedule.

Normal maintenance schedule

The following maintenance services must be performed to ensure good emission control and performance. Keep receipts for all vehicle emission services to protect your warranty. Where both mileage and time are shown, the frequency of service is determined by whichever occurs first.

NO.	ITEM	REMARK
*1	Engine oil and engine oil filter	Check the engine oil level and leak every 500 km or before starting a long trip.
*2	Coolant (Engine)	When adding coolant, use only deionized water or soft water for your vehicle and never mix hard water in the coolant filled at the factory. An improper coolant mixture can result in serious malfunction or engine damage.
*3	Drive belts (Engine)	• Adjust alternator, water pump and air conditioner (if equipped) drive belt. Inspect and if necessary repair or replace. • Inspect drive belt tensioner, idler and alternator pulley and if necessary correct or replace.
*4	Valve clearance	Inspect for excessive valve noise and/or engine vibration and adjust if necessary. In this case, have the system checked by a professional workshop. Kia recommends to visit an authorized Kia dealer/service partner
*5	Spark plug	For your convenience, it can be replaced prior to it's interval when you do maintenance of other items.
*6	Manual transmission fluid / Dual clutch transmission (DCT) fluid	Manual transmission fluid (or Dual clutch transmission (DCT) fluid) should be changed anytime it has been submerged in water
*7	Fuel additives (Gasoline (Petrol))	Kia recommends that you use unleaded gasoline (petrol) which has an Octane Rating of RON (Research Octane Number) 92 / AKI (Anti-Knock Index) 87 or higher. For customers who do not use good quality gasolines (petrols) including fuel additives regularly, and have problems starting or the engine does not run smoothly, one bottle of additives should be added to the fuel tank at every 10,000 km. Additives are available from your authorized Kia dealer along with information on how to use them. Do not mix other additives.
*8	Fuel filter cartridge (Diesel)	This maintenance schedule depends on fuel quality. It is applicable only when using a qualified fuel <"EN590 or equivalent">. If the diesel fuel specifications don't meet the EN590, it must be replaced more frequently. If there are some important safety matters like fuel flow restriction, surging, loss of power, hard starting problem etc., replace the fuel filter immediately regardless of maintenance schedule and consult a professional workshop for more details. Kia recommends to consult an authorized Kia dealer/service partner.

* As it is normal for engine oil to be consumed during driving, the amount of engine oil should be checked regularly.
* The replacement cycle of engine oil is set by the period which the performance of our recommended engine oil is maintained. So, if recommended engine oil is not used, a replacement is required as indicated severe usage condition.

Normal maintenance schedule

The following maintenance services must be performed to ensure good emission control and performance. Keep receipts for all vehicle emission services to protect your warranty. Where both mileage and time are shown, the frequency of service is determined by whichever occurs first.

I: Inspect and if necessary, adjust, correct, clean or replace.

R: Replace or change

Number of months or driving distance, whichever comes first											
Months		1	6	12	24	36	48	60	72	84	96
KM X 1000		1	5	10	20	30	40	50	60	70	80
Engine oil and engine oil filter*1	Petrol, Diesel	I	I	R	R	R	R	R	R	R	R
Coolant (Engine)*2	Petrol	Inspect at every service. At first, Replace 100,000 km or 60 months after that, Replace every 20,000 km or 24 months, whichever earlier									
	Diesel										
Drive belts (Engine)*3	Petrol	–	–	–	I	–	I	–	I	–	I
	Diesel	–	–	–	–	–	I	I	I	I	I
Valve clearance*4	Petrol, Diesel	–	–	–	–	–	–	–	I	–	–
Vacuum hoses and crankcase ventilation hoses	Petrol, Diesel	–	I	I	I	I	I	I	I	I	I
Spark plugs*5	Kappa 1.4 T-GDI	–	–	Replace every 70,000 km							
	Gamma II 1.5 MPI	–	–	Replace every 100,000 km							
Automatic transmission fluid (if equipped)	Petrol, Diesel	–	–	No check, No service required							
Intelligent variable transmission (IVT) fluid (if equipped)	Petrol	–	–	No check, No service required							
Manual transmission fluid*6 (if equipped)	Petrol, Diesel	–	–	–	–	–	–	–	I	–	–
Dual clutch transmission (DCT) fluid*6 (if equipped)	Petrol	–	–	–	–	–	–	–	I	–	–
Drive shaft and boots	Petrol, Diesel	I	I	I	I	I	I	I	I	I	I
Fuel lines, hoses and connections	Petrol, Diesel	I	I	I	I	I	I	I	I	I	I
Fuel tank air filter	Petrol	–	–	–	I	–	R	–	I	–	R
Fuel filter	Petrol	–	–	–	I	–	R	–	I	–	R

I: Inspect and if necessary, adjust, correct, clean or replace. R: Replace or change C: Clean

Number of months or driving distance, whichever comes first											
Months		1	6	12	24	36	48	60	72	84	96
KM X 1000		1	5	10	20	30	40	50	60	70	80
Intercooler, in/out hose, air intake hose	Kappa 1.4 T-GDI	–	I	I	I	I	I	I	I	I	I
Canister	Gamma II 1.5 MPI	–	–	–	–	–	–	I	–	–	–
Vapor hose and fuel filler cap	Petrol	–	–	–	–	–	I	–	–	–	I
Fuel filler cap	Petrol, Diesel	–	–	I	I	I	I	I	I	I	I
Fuel filter cartridge*8	Diesel	–	–	–	–	–	R	–	–	–	R
Air cleaner filter	Petrol, Diesel	–	I	R	R	R	R	R	R	R	R
Exhaust system (leakages & damages)	Petrol, Diesel	I	I	I	I	I	I	I	I	I	I
Cooling system (water pump, hoses) & leakages	Petrol, Diesel	I	I	I	I	I	I	I	I	I	I
Air conditioner compressor/refrigerant (if equipped)	Petrol, Diesel	–	–	I	I	I	I	I	I	I	I
Climate control air filter (if equipped)	Petrol, Diesel	–	I	C	R	C	R	C	R	C	R
Brake discs and pads	Petrol, Diesel	–	I	I	I	I	I	I	I	I	I
Brake lines, hoses and connections	Petrol, Diesel	I	I	I	I	I	I	I	I	I	I
Brake/clutch fluid	Petrol, Diesel	I	I	I	R	I	R	I	R	I	R
Steering gear rack, linkage and boots	Petrol, Diesel	I	I	I	I	I	I	I	I	I	I
Suspension ball joints	Petrol, Diesel	I	I	I	I	I	I	I	I	I	I
Tire (pressure & tread wear)	Petrol, Diesel	I	I	I	I	I	I	I	I	I	I
Battery condition	Petrol, Diesel	I	I	–	I	–	I	–	I	–	I
Throttle body	Petrol	–	–	Inspect and clean if required							

I: Inspect and if necessary, adjust, correct, clean or replace. R: Replace or change C: Clean

Number of months or driving distance, whichever comes first											
Months		1	6	12	24	36	48	60	72	84	96
KM X 1000		1	5	10	20	30	40	50	60	70	80
Wheel alignment & balancing	Petrol, Diesel	–	–	I	I	I	I	I	I	I	I
Check all electrical systems & alternator	Petrol, Diesel	I	I	I	I	I	I	I	I	I	I
Warning lights operation & KDS system check	Petrol, Diesel	I	I	I	I	I	I	I	I	I	I
Road test	Petrol, Diesel	Inspect if required									

Maintenance Under Severe Usage Conditions

The following items must be serviced more frequently on cars mainly used under severe driving conditions. Refer to the chart below for the appropriate maintenance intervals.

R: Replace

I: Inspect and if necessary, adjust, correct, clean or replace

Maintenance item	Maintenance operation	Maintenance intervals	Driving condition
Engine oil and engine oil filter	R	Every 5,000 km or 6 months	A, B, C, D, E, F, G, H, I, J, K, L
Air cleaner filter	R	Inspect more frequently depending on the condition	C, E
Spark plugs	R	Inspect more frequently depending on the condition	A, B, F, G, H, I, K
Automatic transmission fluid (if equipped)	R	Every 90,000 km	A, C, D, E, F, G, H, I, K
Manual Transmission fluid (if equipped)	R	Replace Every 120,000Km	C,D,E,F,G,H,I,J
Intelligent Variable Transmission (IVT) fluid (if equipped)	R	Every 90,000 km	A, C, D, E, F, G, H, I, K
Dual clutch transmission (DCT) fluid (if equipped)	R	Every 120,000 km	C, D, E, F, G, H, I, J
Brake discs and pads, calipers and rotors	I	Inspect more frequently depending on the condition	C, D, E, G, H
Parking brake	I	Inspect more frequently depending on the condition	C, D, G, H
Steering gear rack, linkage and boots	I	Inspect more frequently depending on the condition	C, D, E, F, G
Suspension ball joints and mounting bolts	I	Inspect more frequently depending on the condition	C, D, E, F, G
Drive shafts and boots	I	Inspect more frequently depending on the condition	C, D, E, F, G, H, I, J
Climate control air filter	I	Inspect more frequently depending on the condition	C, E, G

Severe Driving Conditions

A: Repeatedly driving short distance of less than 8 km in normal temperature or less than 16 km in freezing temperature.
B: Extensive low speed driving for long distances.
C: Driving on rough, dusty, muddy, unpaved, graveled or salt-spread roads.
D: Driving in areas using salt or other corrosive materials or in very cold weather.
E: Driving in heavy dust condition.
F: Driving in heavy traffic area.
G: Driving on uphill, downhill, or mountain roads.
H: Using for towing or camping and driving with loading on the roof.
I: Vehicle towing, driving for patrol car, taxi, or other commercial use.
J: Frequently driving under high speed or rapid acceleration.

K: Frequently driving in stop-and-go conditions

L: Engine oil usage which is not recommended (Mineral type, Semisynthetic, Lower grade spec, etc.)

Explanation of scheduled maintenance items

The following parts require scheduled maintenance.

Engine oil and filter

The engine oil and filter should be changed at the intervals specified in the maintenance schedule. If the vehicle is being driven in severe conditions, more frequent oil and filter changes are required.

Drive belts

Inspect all drive belts for evidence of cuts, cracks, excessive wear or oil saturation and replace if necessary. Drive belts should be checked periodically for proper tension and adjusted as necessary.

Fuel filter (for gasoline (petrol))

Kia gasoline (petrol) vehicle is equipped with a lifetime fuel filter that is integrated with the fuel tank. Regular maintenance or replacement is generally not needed. This may vary depending on fuel quality. If you experience any of the following: fuel flow restriction, surging, loss of power, or a hard starting issue, inspection and, if necessary, replacement may be needed. We recommend that the fuel filter be replaced by a professional work-

shop. Kia recommends to visit an authorized Kia dealer/service partner.

Fuel filter cartridge (for diesel)

A clogged filter can limit the speed at which the vehicle may be driven, damage the emission system and cause multiple issues such as hard starting. If an excessive amount of foreign matter accumulates in the fuel tank, the filter may require replacement more frequently.

After installing a new filter, run the engine for several minutes, and check for leaks at the connections. We recommend that the fuel filter be replaced by a professional workshop. Kia recommends to visit an authorized Kia dealer/service partner.

Fuel lines, fuel hoses and connections

Check the fuel lines, fuel hoses and connections for leakage and damage. We recommend that the fuel lines, fuel hoses and connections be replaced by a professional workshop. Kia recommends to visit an authorized Kia dealer/service partner.

⚠ WARNING

Diesel only

Never work on the injection system with the engine running or within 30 seconds after shutting off the engine. High pressure pump, rail, injectors and high pressure pipes are subject to high pressure even after the engine stops. The fuel jet produced by fuel leaks may cause serious injury, if it touches the body. People wearing a cardiac pacemaker should maintain a distance of at least 30 cm from the ECU or wiring harness within the engine room while the engine is running, since the high currents in the Common Rail system produce considerable magnetic fields.

Vapor hose and fuel filler cap (for gasoline (petrol) engine)

The vapor hose and fuel filler cap should be inspected at those intervals specified in the maintenance schedule. Make sure that a new vapor hose or fuel filler cap is correctly replaced.

Vacuum crankcase ventilation hoses

Inspect the surface of hoses for evidence of heat and/or mechanical damage. Hard and brittle rubber, cracking, tears, cuts, abrasions, and excessive swelling indicate deterioration. Particular attention should be paid to examine those hose surfaces nearest to high heat sources, such as the exhaust manifold. Inspect the hose routing to assure that the hoses do not come in contact with any heat source, sharp edges or moving components which might cause heat damage or mechanical wear. Inspect all hose connections, such as clamps and couplings, to make sure they are secure, and that no leaks are present. Hoses should be replaced immediately if there is any evidence of deterioration or damage.

Air cleaner filter

We recommend that the air cleaner filter be replaced by a professional workshop. Kia recommends to visit an authorized Kia dealer/service partner.

Spark plugs

Make sure to install new spark plugs of the correct heat range.

Cooling system

Check the cooling system components, such as the radiator, coolant reservoir, hoses and connections for leakage and damage. Replace any damaged parts.

Coolant

The coolant should be changed at the intervals specified in the maintenance schedule.

Manual transmission fluid (if equipped)

Inspect the manual transmission fluid according to the maintenance schedule.

Automatic transmission fluid (if equipped)

Automatic transmission fluid should not be checked under normal usage conditions. Have the automatic transmission fluid changed by a professional workshop according to the maintenance schedule. Kia recommends to visit an authorized Kia dealer/service partner.

NOTICE

Automatic transmission fluid color is basically red.

As the vehicle is driven, the automatic transmission fluid will begin to look darker. It is normal condition and you should not judge the need to replace the fluid based upon the changed color.

CAUTION

The use of a non-specified fluid could result in transmission malfunction and failure.

Use only specified automatic transmission fluid. (Refer to "Recommended lubricants and capacities" on page 9-7.)

Intelligent Variable Transmission (IVT) fluid (if equipped)

Intelligent Variable Transmission (IVT) fluid should not be checked under normal usage conditions. But in severe conditions, the fluid should be changed at an authorized Kia dealer in accordance to the scheduled maintenance at the beginning of this section.

We recommend that the Intelligent Variable Transmission fluid (IVT) changed by an authorized Kia dealer according to the maintenance schedule.

NOTICE

Intelligent Variable Transmission (IVT) fluid color is usually light amber. As the vehicle is driven, the Intelligent Variable Transmission (IVT) fluid will begin to look darker.

It is the normal condition and you should not judge the need to replace the fluid based upon the changed color.

CAUTION

Transmission fluids

The use of non-specified fluid (even marked as compatible with genuine) could result in shift quality deterioration and vibrations, eventually, the transmission failure. Use only specified Intelligent Variable Transmission (IVT) fluid. (Refer to "Recommended lubricants and capacities" on page 9-7)

Dual clutch transmission fluid (if equipped)

Inspect the dual clutch transmission fluid according to the maintenance schedule.

Brake hoses and lines

Visually check for proper installation, chafing, cracks, deterioration and any leakage. Replace any deteriorated or damaged parts immediately.

Brake/clutch fluid

Check the brake/clutch fluid level in the brake/clutch fluid reservoir. The level should be between "MIN" and "MAX" marks on the side of the reservoir. Use only hydraulic brake/clutch fluid conforming to DOT 4 specification.

Parking brake

Inspect the parking brake system including the parking brake lever (or pedal) and cables.

Exhaust pipe and muffler

Visually inspect the exhaust pipes, muffler and hangers for cracks, deterioration, or damage. Start the engine and listen carefully for any exhaust gas leakage. Tighten connections or replace parts as necessary.

Brake discs, pads, calipers and rotors

Check the pads for excessive wear, discs for run out and wear, and calipers for fluid leakage.

For more information on checking the pads or lining wear limit, we recommend to refer to the Kia web site. (http://www.kia-hotline.com)

Suspension mounting bolts

Check the suspension connections for looseness or damage. Retighten to the specified torque.

Steering gear box, linkage & boots/ lower arm ball joint

With the vehicle stopped and off, check for excessive free-play in the steering wheel.

Check the linkage for bends or damage. Check the dust boots and ball joints for deterioration, cracks, or damage. Replace any damaged parts.

Drive shafts and boots

Check the drive shafts, boots and clamps for cracks, deterioration, or damage. Replace any damaged parts and, if necessary, repack the grease.

Air conditioning refrigerant

Check the air conditioning lines and connections for leakage and damage.

Checking fluid levels

When checking engine oil, engine coolant, brake/clutch fluid, and washer fluid, always be sure to clean the area around any filler plug, drain plug, or dipstick before checking or draining any lubricant or fluid. This is especially important in dusty or sandy areas and when the vehicle is used on unpaved roads. Cleaning the plug and dipstick areas will prevent dirt and grit from entering the engine and other mechanisms that could be damaged.

Engine oil and filter (for gasoline (petrol))

The engine oil and filter should be changed at the intervals specified in the maintenance schedule. If the vehicle is being driven in severe conditions, more frequent oil and filter changes are required.

Checking the engine oil level

- Engine oil is used for lubrication and cooling, so it is gradually consumed during driving the vehicle.
- Regularly check and manage the oil level using the following procedure.

1. Be sure the vehicle is on level ground.
2. Start the engine and allow it to reach normal operating temperature.

⚠ WARNING

Radiator hose

Be very careful not to touch the radiator hose when checking or adding the engine oil as it may be hot enough to burn you.

3. Turn the engine off and wait for a few minutes (about 15 minutes. (with oil filler cap and dipstick detached)) for the oil to return to the oil pan.
4. Pull the dipstick out, wipe it clean, and re-insert it fully.

⚠ CAUTION

- Do not overfill the engine oil. It may damage the engine.
- Do not spill engine oil, when adding or changing engine oil. If you drop the engine oil on the engine room, wipe it off immediately.
- When you wipe the oil level gauge, you should wipe it with a clean cloth. When mixed with debris, it can cause engine damage.

5. Pull the dipstick out again and check the level.
6. Check if the oil level is between the F-L line and refill it if the oil level is near the L line.

Smartstream G1.4 T-GDi

OSP2I070010

Smartstream G1.5

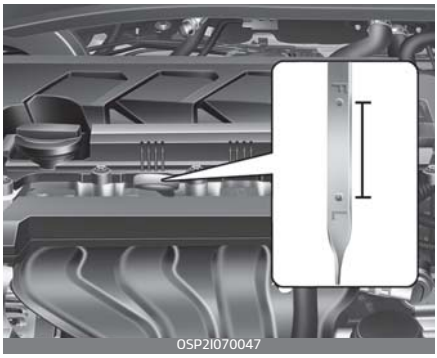

OSP2I070047

Smartstream G1.4 T-GDi

OSP2I079011

Smartstream G1.5

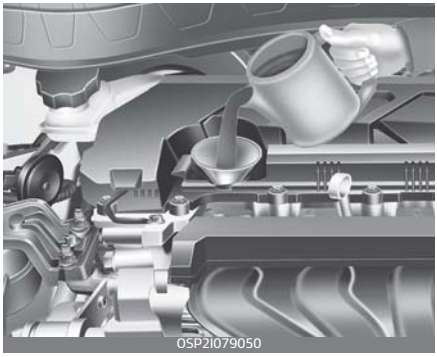

OSP2I079050

Do not overfill. Use a funnel to help prevent oil from being spilled on engine components. Use only the

specified engine oil. (Refer to "Recommended lubricants and capacities" on page 9–7.)

- The engine oil consumption may increase while you break in a new vehicle and it will be stabilized after driving 6,000 km.
- The engine oil consumption can be affected by driving habits, climate conditions, traffic conditions, oil quality, etc. Therefore, it is recommended that you inspect the engine oil level regularly and refill it if necessary.
- The engine oil change interval is set for the purpose of preventing oil deterioration, and is not related the amount of oil consumption; so, check and refill the amount of the oil regularly.

Changing the engine oil and filter

We recommend that the engine oil and filter be replaced by an authorized Kia dealer according to the Maintenance Schedule at the beginning of this chapter.

- If exceeding the maintenance schedule for replacement of engine oil, the engine oil performance may deteriorate and the engine condition may be affected. Therefore, the replacement cycle should be observed.
- To keep the engine in optimal condition, use recommended engine oil. If not using the recommended oil, replace it according to the severe usage maintenance conditions.

⚠ WARNING

Used engine oil may cause irritation or cancer of the skin if left in contact with the skin for prolonged periods of time. Used engine oil contains chemicals that have caused cancer in laboratory animals. Always protect your skin by washing your hands thoroughly with soap and warm water as soon as possible after handling used oil.

Engine oil (for diesel)

Checking the engine oil level

- Engine oil is used for lubrication and cooling, so it is gradually consumed during driving the vehicle.
- Regularly check and manage the oil level using the following procedure.

(Diesel) 1.5 VGT

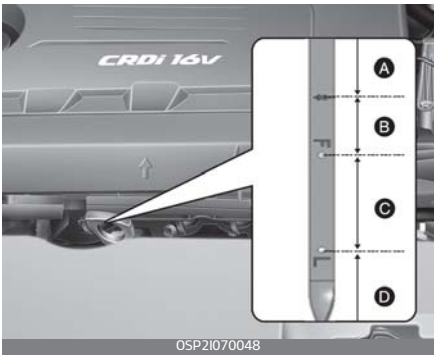

1. Be sure the vehicle is on level ground.
2. Start the engine and allow it to reach normal operating temperature.
3. Turn the engine off and wait for a few minutes (about 15 minutes. (with oil filler cap and dipstick detached)) for the oil to return to the oil pan.
4. Pull the dipstick out, wipe it clean, and re-insert it fully.

⚠ WARNING

Radiator hose

Be very careful not to touch the radiator hose when checking or adding the engine oil as it may be hot enough to burn you.

5. Pull the dipstick out again and check the level.
6. The level should be in the C range. If the level is in the D range, add enough engine oil to bring the level up to the C range.

Figure	Required action according to the respective engine oil level
Range (A)	Contact an authorized Kia dealer/service partner.
Range (B)	Do not refill oil.
Range (C)	You may add oil as long as the oil level does not go above C-range.
Range (D)	You must add oil and make sure that the oil level is in the C-Range.

⚠ CAUTION

- Do not spill engine oil, when adding or changing engine oil. If you drop the engine oil on the engine room, wipe it off immediately.
- When you wipe the oil level gauge, you should wipe it with a clean cloth. When mixed with debris, it can cause engine damage.

(Diesel) 1.5 VGT

Check if the oil level is between the F-L line and refill it if the oil level is near the L line.

Use only the specified engine oil. (Refer to "Recommended lubricants and capacities" on page 9-7.)

- The engine oil consumption may increase while you break in a new vehicle and it will be stabilized after driving 6,000 km.
- The engine oil consumption can be affected by driving habits, climate conditions, traffic conditions, oil quality, etc. Therefore, it is recommended that you inspect the engine oil level regularly and refill it if necessary.
- The engine oil change interval is set for the purpose of preventing oil deterioration, and is not related the amount of oil consumption; so, check and refill the amount of the oil regularly.

Changing the engine oil and filter

Have the engine oil and filter replaced by a professional workshop. Kia recommends to visit an authorized Kia dealer/service partner.

- Engine oil is used for lubrication and cooling, so it is gradually consumed during driving the vehicle.
- Regularly check and manage the oil level using the following procedure.

⚠ WARNING

Used engine oil may cause skin irritation or cancer if left in contact with the skin for prolonged periods of time. Used engine oil contains chemicals that have caused cancer in laboratory animals. Always protect your skin by washing your hands thoroughly with soap and warm water as soon as possible after handling used oil.

Engine coolant

The high-pressure cooling system has a reservoir filled with year round antifreeze coolant. The reservoir is filled at the factory.

Check the antifreeze protection and coolant level at least once a year, at the beginning of the winter season, and before traveling to a colder climate.

⚠ WARNING

Radiator/Inverter cap

Never attempt to remove the radiator or inverter cap while the engine is operating or hot. Doing so might lead to cooling system and engine damage and could result in serious bodily injury from escaping hot coolant or steam.

Recommended coolant

When adding coolant, use only deionized water or soft water for your vehicle and never mix hard water in the coolant filled at the factory. An improper coolant mixture can result in serious malfunction or damage.

- Do not use alcohol or methanol coolant or mix them with the specified coolant.
- Do not use a solution that contains more than 60% antifreeze or less than 35% antifreeze, which would reduce the effectiveness of the solution.
- The cooling circuit of a vehicle equipped with a heat pump system may freeze in extremely low temperature when the concentration of the antifreezing liquid is below 45%.

For mixture percentage, refer to the following table.

Ambient Temperature	Mixture Percentage (volume)	
	Antifreeze	Water
-15 °C	35	65
-25 °C	40	60
-35 °C	50	50
-45 °C	60	40

⚠ WARNING

Radiator cap

Do not remove the radiator cap when the engine and radiator are hot. Scalding hot coolant and steam may blow out under pressure which may result in serious injury.

Smartstream G1.4 T-GDi

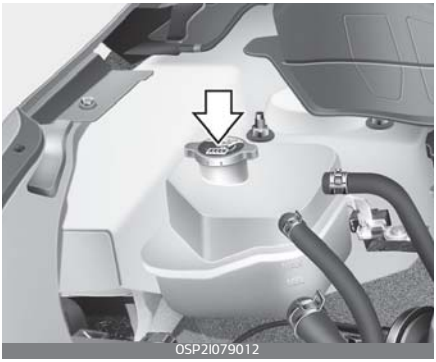

Smartstream G1.5

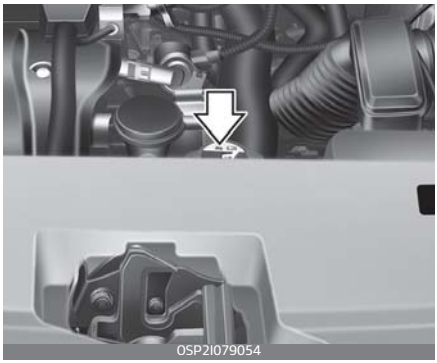

(Diesel) 1.5 VGT

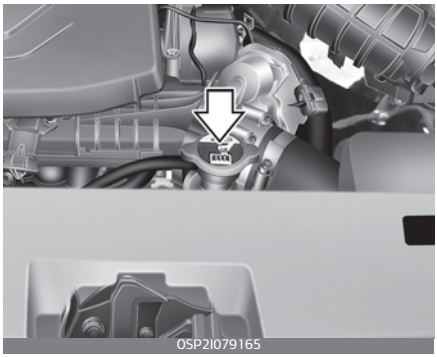

Checking the coolant level

⚠ WARNING

Removing radiator cap

Never attempt to remove the radiator cap while the engine is operating or hot. Doing so might lead to cooling system damage and could result in serious personal injury from escaping hot coolant or steam.

1. Turn the vehicle off and wait until it cools down.
2. Use extreme care when removing the radiator cap. Wrap a thick towel around it, and turn it counterclockwise slowly to the first stop.
3. Step back while the pressure is released from the cooling system.
4. When you are sure all the pressure has been released, press down on the cap, using a thick towel, and continue turning counterclockwise to remove it.

⚠ WARNING

Cooling fan

Use caution when working near the blade of the cooling fan. The electric motor (cooling fan) is controlled by coolant temperature, refrigerant pressure and vehicle speed. it may sometimes operate even when the vehicle is not running.

5. Check the condition and connec-tions of all cooling system hoses and heater hoses.
6. Replace any swollen or deterio-rated hoses.
7. Check the coolant level. The cool-ant level should be filled between F and L marks on the side of the coolant reservoir when the engine room is cool.

Smartstream G1.4 T-GDi

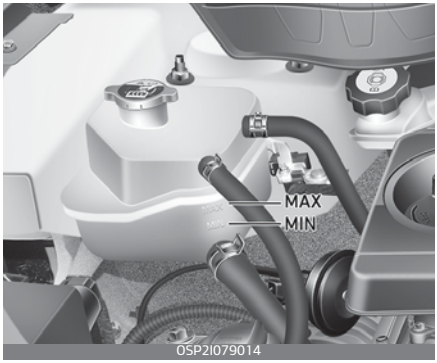

Smartstream G1.5

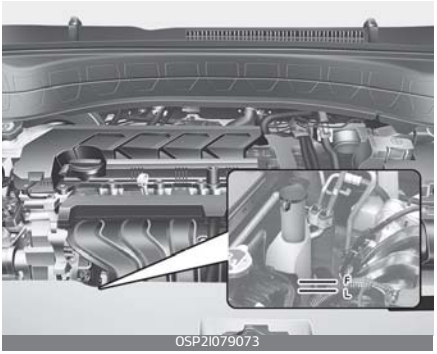

(Diesel) 1.5 VGT

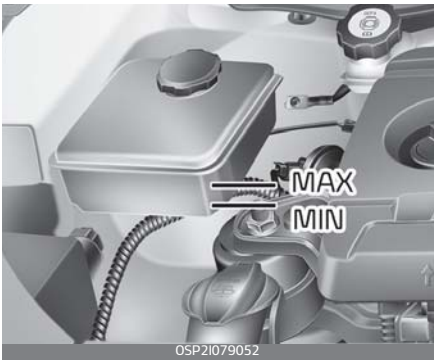

8. If the coolant level is low, add enough specified coolant to pro-vide protection against freezing and corrosion. Bring the level to F, but do not overfill.

If frequent additions are required, we recommend that the system be inspected by a professional work-shop. Kia recommends to visit an authorized Kia dealer/service part-ner.

Changing the coolant

We recommend that the coolant be replaced by an authorized Kia dealer according to the Maintenance Schedule at the beginning of this chapter.

⚠ CAUTION

Put a thick cloth or fabric around the radiator cap before refilling the coolant in order to prevent the coolant from overflowing into engine parts such as the alternator.

⚠ WARNING

Coolant

- Do not use radiator coolant or antifreeze in the washer fluid reservoir.
- Radiator coolant can severely obscure visibility when sprayed on the windshield and may cause loss of vehicle control or damage to paint and body trim.

Brake/clutch fluid

The brake/clutch fluid acts to transmit force to the brake when the driver depresses the brake pedal. Brake/clutch fluid must be maintained periodically to ensure that the brakes operate smoothly.

Checking the brake/clutch fluid level

Check the fluid level in the reservoir periodically. The fluid level should be between MAX and MIN marks on the side of the reservoir.

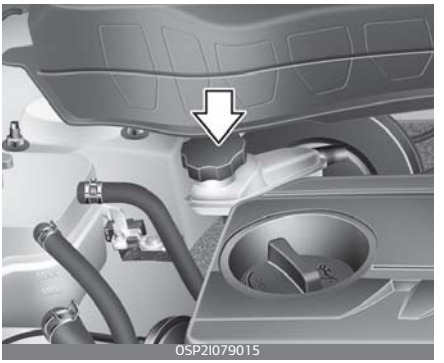

1. Before removing the reservoir cap and adding brake/clutch fluid, clean the area around the reservoir cap thoroughly to prevent brake/clutch fluid contamination.
2. If the level is low, add fluid to the MAX level. The level will fall with accumulated mileage. This is a normal condition associated with the wear of the brake linings. If the fluid level is excessively low, we recommend that the system be checked by a professional

workshop. Kia recommends to visit an authorized Kia dealer/service partner.

Use only the specified brake/clutch fluid. (Refer to "Recommended lubricants and capacities" on page 9-7.)

Never mix different types of fluid.

⚠ WARNING

In the event the brake system requires frequent additions of fluid, we recommend that the system be checked by a professional workshop. Kia recommends to visit an authorized Kia dealer/service partner.

⚠ WARNING

When changing and adding brake/clutch fluid, handle it carefully. Do not let it come in contact with your eyes. If brake/clutch fluid should come in contact with your eyes, immediately flush them with a large quantity of fresh tap water. Have your eyes examined by a doctor as soon as possible.

⚠ CAUTION

Brake/clutch fluid

Do not allow brake/clutch fluid to contact the vehicle's body paint, as paint damage will result.

The brake/clutch fluid constantly absorbs moisture from the air. This lowers the boiling point of the brake/clutch fluid. If the boiling point is too low, vapor pockets may form in the brake system when the brakes are applied hard.

Brake/clutch fluid, which has been exposed to open air for an extended time should never be used as its quality cannot be guaranteed. It should be disposed of properly.

Washer fluid

Washer fluid is used when wiping the windshield of the vehicle with a windshield wiper. You should check and refill washer fluid periodically to make sure that it doesn't run out.

Checking the washer fluid level

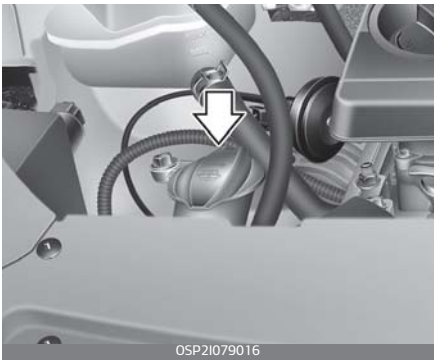

The reservoir is translucent so that you can check the level with a quick visual inspection.

- Check the fluid level in the washer fluid reservoir and add fluid if necessary. Plain water may be used if washer fluid is not available. However, use washer solvent with antifreeze characteristics in cold climates to prevent freezing.

⚠ WARNING

Coolant

- Do not use radiator coolant or antifreeze in the washer fluid reservoir.
- Radiator coolant can severely obscure visibility when sprayed on the windshield and may cause loss of vehicle control or damage to paint and body trim.
- Windshield Washer fluid agents contain some amounts of alcohol and can be flammable under certain circumstances. Do not allow sparks or flame to contact the washer fluid or the washer fluid reservoir. Damage to the vehicle or occupants could occur.
- Windshield washer fluid is poisonous to humans and animals. Do not drink and avoid contacting windshield washer fluid. Serious injury or death could occur.

PARKING BRAKE

Checking the parking brake

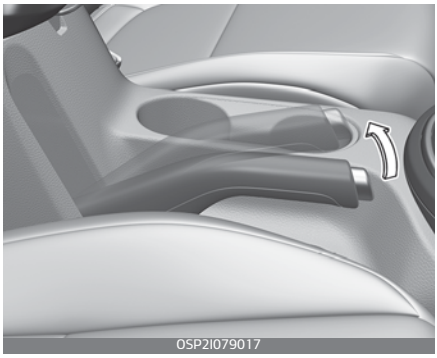

Check the stroke of the parking brake by counting the number of "clicks" heard while fully applying it from the released position.

Also, the parking brake alone should securely hold the vehicle on a fairly steep grade. If the stroke is more or less than specified, we recommend that the system be inspected by an authorized kia dealer.

Stroke: 6~8 "clicks" at a force of 20 kg (44 lbs, 196 N).

Fuel Filter (for diesel)

Draining water from the fuel filter

The fuel filter for diesel engine plays an important role of separating water from fuel and accumulating the water in its bottom.

If water accumulates in the fuel filter, the warning light comes on when the ignition switch is in the ON position.

If this warning light illuminates, take your car to a professional workshop and have drain the water and check the system. Kia recommends to visit an authorized Kia dealer/service partner.

CAUTION

If the water accumulated in the fuel filter is not drained at proper times, damages to the major parts such as the fuel system can be caused by water permeation in the fuel filter.

Fuel filter cartridge replacement

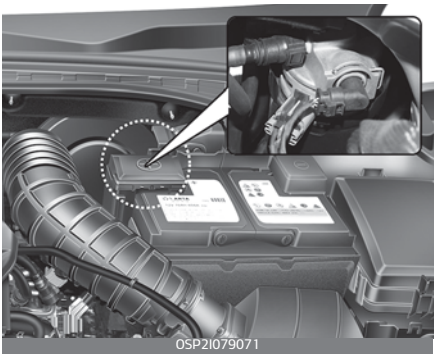
OSP2I079071

✻ NOTICE

When replacing the fuel filter cartridge, use parts for replacement from a professional workshop. Kia recommends to visit an authorized Kia dealer/service partner.

Air cleaner filter

A Genuine Kia air cleaner filter is recommended when the filter is replaced.

Replacing air cleaner filter

Air cleaner filter must be replaced when necessary, and should not be washed.

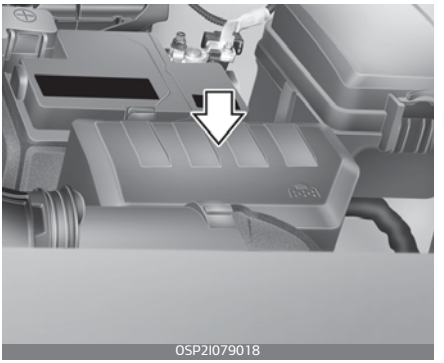
OSP2I079018

You can clean the filter when inspecting the air cleaner compartment. Clean the filter by using compressed air.

1. Loosen the air cleaner cover (1) attaching clips and open the cover.

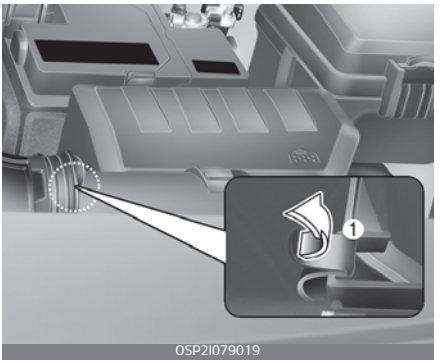

OSP2I079019

2. Wipe the inside of the air cleaner.
3. Replace the air cleaner filter.

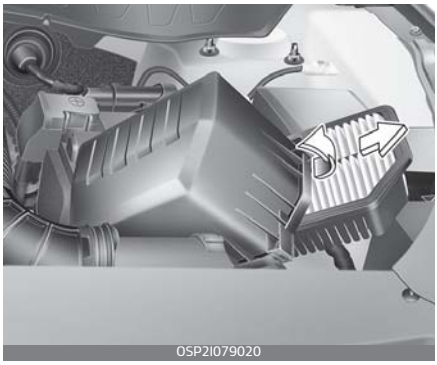

4. Lock the cover with the cover attaching clips.

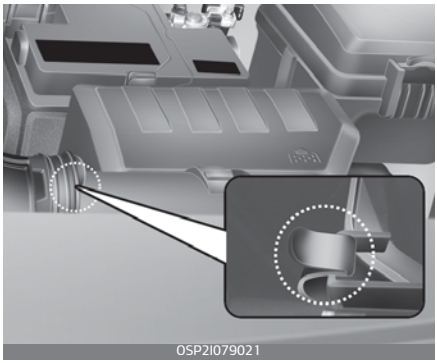

Replace the filter according to the Maintenance Schedule.

If the vehicle is operated in extremely dusty or sandy areas, replace the element more often than the usual recommended intervals. (Refer to "Maintenance Under Severe Usage Conditions" on page 8-17.)

⚠ CAUTION

Air filter maintenance

- Do not drive with the air cleaner removed; this will result in excessive engine wear.
- When removing the air cleaner filter, be careful that dust or dirt does not enter the air intake, or damage may result.
- Use a Kia genuine part. Use of a non-genuine part could damage the air flow sensor.
  We recommend that you use parts for replacement from an authorized Kia dealer

Replace the filter according to the Maintenance Schedule.

If the vehicle is operated in extremely dusty or sandy areas, replace the element more often than the usual recommended intervals. (Refer to "Maintenance Under Severe Usage Conditions" on page 8-17.)

Climate control air filter

The climate control air filter should be replaced according to the maintenance schedule. If the vehicle is operated in severely air-polluted cities or on dusty rough roads for a long period, it should be inspected more frequently and replaced earlier.

Inspecting and replacing climate control air filter

When you replace the climate control air filter, replace it performing the following procedure. Be careful to avoid damaging other components.

1. Open the glove box.

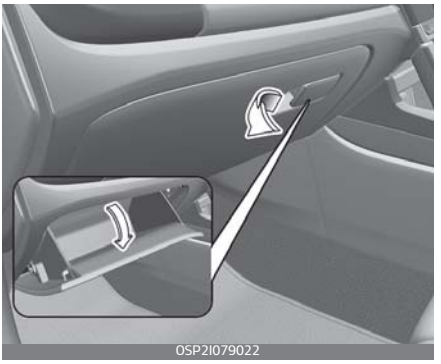
OSP2I079022

2. Push both sides of the glove box.

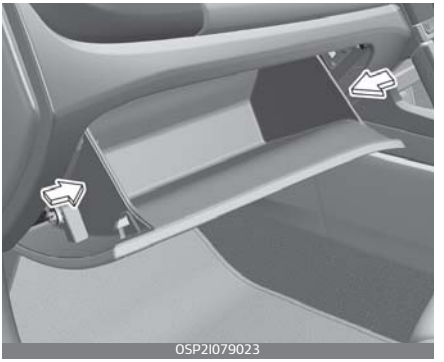
OSP2I079023

3. Remove the climate control air filter cover by pulling out right side of the cover.

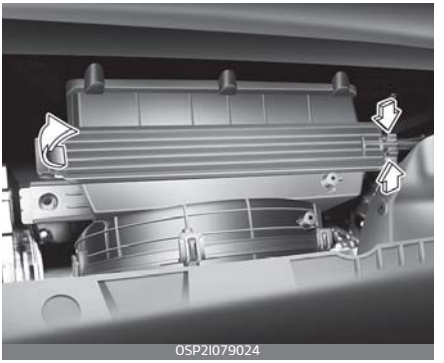
OSP2I079024

4. Replace the climate control air filter.

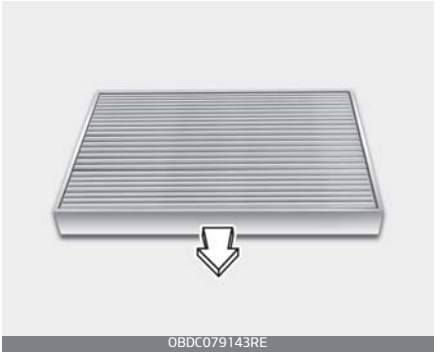
OBDC079143RE

5. Reassemble in the reverse order of disassembly.

When replacing the climate control air filter install it properly. Otherwise, the system may produce noise and the effectiveness of the filter may be reduced.

Wiper blades

When the wipers no longer clean adequately, the blades may be worn or cracked, and require replacement.

To prevent damage to the wiper arms or other components, do not attempt to move the wipers manually.

The use of a non-specified wiper blade could result in wiper malfunction and failure.

Blade inspection

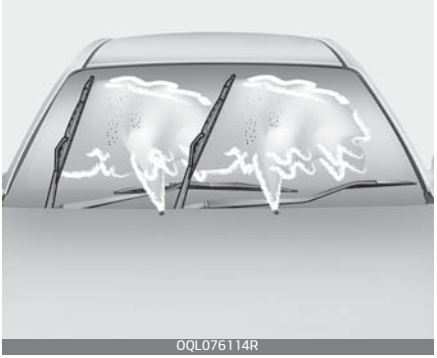

OQL076114R

NOTICE

Commercial hot waxes applied by automatic vehicle washes have been known to make the windshield difficult to clean.

Contamination of either the windshield or the wiper blades with foreign matter can reduce the effectiveness of the windshield wipers. Common sources of contamination are insects, tree sap, and hot wax treatments used by some commercial vehicle washes. If the blades are not wiping properly, clean both the window and the blades with a good cleaner or mild detergent, and rinse thoroughly with clean water.

⚠ CAUTION

To prevent damage to the wiper blades, do not use gasoline (petrol), kerosene, paint thinner, or other solvents on or near them.

Front windshield wiper blade

OSP21070025

To replace wiper blade, lift the arm first and replace the wiper blade as per procedure.

Replacing front windshield wiper blade

1. Raise the wiper arm and turn the wiper blade assembly to expose the plastic locking clip.

ODEEV098013NR

⚠ CAUTION

Wiper arms

- Do not allow the wiper arm to fall against the windshield, since it may chip or crack the windshield.

2. Compress the clip and slide the blade assembly downward.

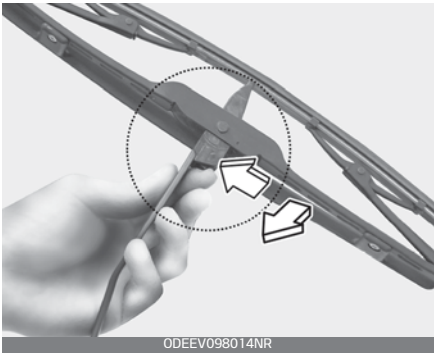
ODEEV098014NR

3. Lift it off the arm.

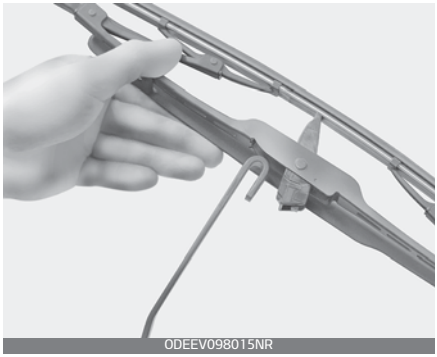

4. Install the blade assembly in the reverse order of removal.

Replacing rear window wiper blade

1. Raise the wiper arm and rotate the wiper blade assembly (1).
2. Pull out the wiper blade assembly.

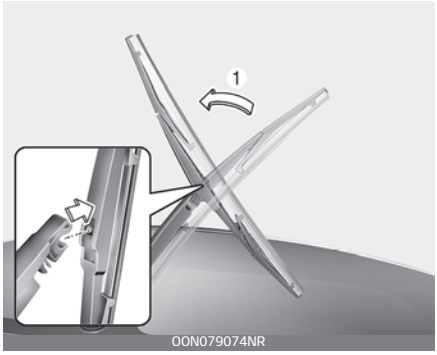

3. Install the new blade assembly by inserting the center part into the slot in the wiper arm until it clicks into place.
4. Make sure the blade assembly is installed firmly by trying to pull it slightly.

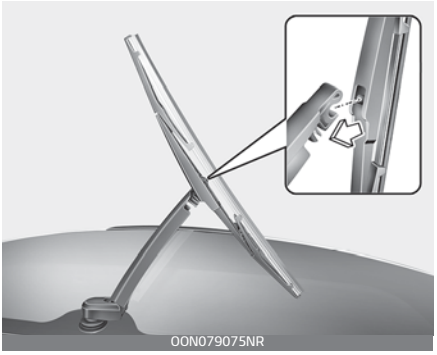

To prevent damage to the wiper arms or other components, have an authorized Kia dealer/service partner replace the wiper blade.

Battery

The battery powers the engine in order to move the vehicle as well as supplying power to the various devices installed in the vehicle.

For best battery service

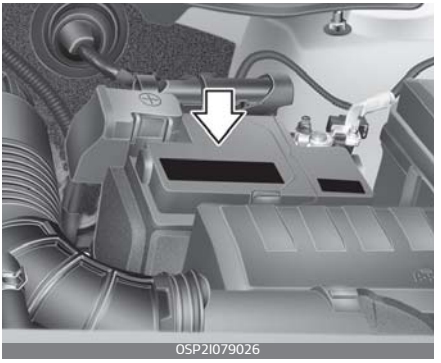
OSP21079026

- Keep the battery securely mounted.
- Keep the battery top clean and dry.
- Keep the terminals and connections clean, tight, and coated with petroleum jelly or terminal grease.
- Rinse any spilled electrolyte from the battery immediately with a solution of water and baking soda.
- If the vehicle is not going to be used for an extended time, disconnect the battery cables.

✻ NOTICE

For batteries marked with UPPER and LOWER

Basically equipped battery is maintenance free type. If your vehicle is equipped with the battery marked with LOWER and UPPER on the side, you can check the electrolyte level. The electrolyte level should be between LOWER and UPPER. If the electrolyte level is low, it needs to add distilled (demineralized) water (Never add sulfuric acid or other electrolyte). When refill, be careful not to splash the battery and adjacent components. And do not overfill the battery cells. It can cause corrosion on other parts. After then ensure that tighten the cell caps. We recommend that you contact an authorized Kia dealer.

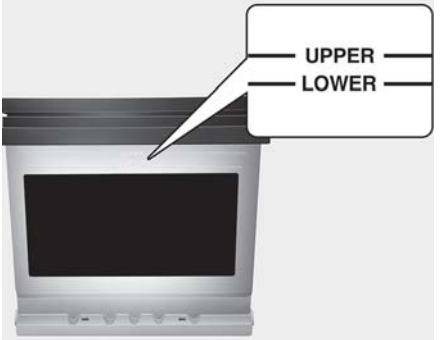

OHYK077011

⚠ WARNING

Battery dangers

Always read the following instructions carefully when handling a battery.

Keep lighted cigarettes and all other flames or sparks away from the battery.

Hydrogen, a highly combustible gas, is always present in battery cells and may explode if ignited.

Keep batteries out of the reach of children because batteries contain highly corrosive SULFURIC ACID. Do not allow battery acid to contact your skin, eyes, clothing or paint finish.

If any electrolyte gets into your eyes, flush your eyes with clean water for at least 15 minutes and get immediate medical attention. If electrolyte gets on your skin, thoroughly wash the contacted area. If you feel a pain or a burning sensation, get medical attention immediately.

Wear eye protection when charging or working near a battery. Always provide ventilation when working in an enclosed space.

An inappropriately disposed battery can be harmful to the environment and human health. Dispose the battery according to your local law(s) or regulation.

The battery contains lead. Do not dispose of it after use. Please return the battery to an authorized Kia dealer to be recycled.

- When lifting a plastic-cased battery, excessive pressure on the case may cause battery acid to leak, resulting in personal injury. Lift with a battery carrier or with your hands on opposite corners.
- Never attempt to recharge the battery when the battery cables are connected.
- The electrical ignition system works with high voltage. Never touch these components with the engine running or the ignition switched on.

Failure to follow the above warnings can result in serious bodily injury or death.

⚠ CAUTION

If you use unauthorized electronic devices, the battery may be discharged. Never use unauthorized devices.

Battery capacity label

example

* The actual battery label in the vehicle may differ from the illustration.

1. 12 V: The nominal voltage
2. 60 Ah: The nominal capacity
3. 550 A: The cold-test current

Battery recharging

Your vehicle has a maintenance-free, calcium-based battery

- If the battery becomes discharged in a short time (because, for example, the headlights or interior lights were left on while the vehicle was not in use), recharge it by slow charging (trickle) for 10 hours.
- If the battery gradually discharges because of high electric load while the vehicle is being used, recharge it at 20~30 A for two hours.

⚠ WARNING

When recharging the battery, observe the following precautions:

- The battery must be removed from the vehicle and placed in an area with good ventilation.
- Do not allow cigarettes, sparks, or flame near the battery.
- Watch the battery during charging, and stop or reduce the charging rate in following cases:
  1. the battery cells begin gassing (boiling) violently
  2. the electrolyte temperature of any cell exceeds 49 °C.
- Wear eye protection when checking the battery during charging.
- Disconnect the battery charger in the following order.
  1. Turn off the battery charger main switch.
  2. Unhook the negative clamp from the negative battery terminal.
  3. Unhook the positive clamp from the positive battery terminal.
- Before performing maintenance or recharging the battery, turn off all accessories and stop the vehicle.
- The negative battery cable must be removed first and installed last when the battery is disconnected.

Reset items

The following items should be reset after the battery has been discharged or the battery has been disconnected.

- Auto up/down window (Refer to "Window opening and closing" on page 4-27)
- Trip computer (Refer to "Trip information (trip computer)" on page 4-62)
- Climate control system (Refer to "Automatic climate control system (if equipped)" on page 4-118)

Tires and wheels

For proper maintenance, safety, and maximum fuel economy, you must always maintain the recommended tire inflation pressures and stay within the load limits and weight distribution recommended for your vehicle.

Recommended cold tire inflation pressures

All tire pressures should be checked when the tires are cold. "Cold Tires" means the vehicle has not been driven for at least three hours or driven less than 1.6 km.

Recommended pressures must be maintained for the best ride, vehicle handling, and minimum tire wear.

For recommended inflation pressure, refer to "Tires and wheels" on page 9-6.

All specifications (sizes and pressures) can be found on a label attached to the driver's side center pillar.

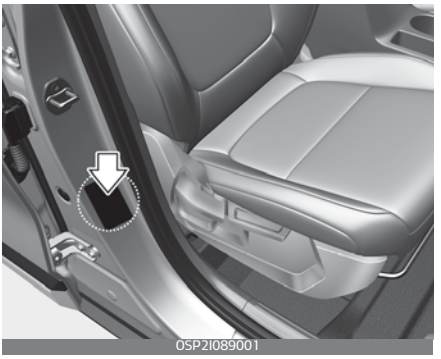

⚠ WARNING

Tire underinflation

Inflate your tires consistent with the instructions provided in this manual. Regularly check the tire inflation pressure, and correct it as needed: at least twice a month and before any long trips on the road. If you fail to observe this precaution, you may be driving on underinflated tires, which may not only compromise your vehicle's driving stability, but also lead to tire damage and the risk of an accident. This risk is much higher on hot days and when driving for long periods at high speeds.

Failure to maintain specified pressure may result in excessive wear, poor handling, reduced fuel economy, deformation of tire and/or wheel, harsh ride conditions, possibility for additional damage from road hazards, or result in tire failure.

Tire pressure

Always observe the following:

- Check tire pressure when the tires are cold. (After vehicle has been parked for at least three hours or hasn't been driven more than 1.6 km since startup.)
- Check the pressure of your spare tire each time you check the pressure of other tires.
- Never overload your vehicle. Be careful not to overload a vehicle luggage rack if your vehicle is equipped with one.
- Warm tires normally exceed recommended cold tire pressures by 28~41 kPa. Do not release air from warm tires to adjust the pressure or the tires will be underinflated.

⚠ WARNING

Tire Inflation

Overinflation or underinflation can reduce tire life, adversely affect vehicle handling, and lead to sudden tire failure. This could result in loss of vehicle control and potential injury.

Checking tire inflation pressure

Check your tires once a month or more.

Use a good quality gauge to check tire pressure. You cannot tell if your tires are properly inflated simply by looking at them. Radial tires may look properly inflated even when they're underinflated.

Check the tire's inflation pressure when the tires are cold. "Cold" means your vehicle has been sitting or at least three hours or driven no more than 1.6 km.

1. Remove the valve cap from the tire valve stem.
2. Press the tire gauge firmly onto the valve to get a pressure measurement. If the cold tire inflation pressure matches the recommended pressure on the tire and loading information label, no further adjustment is necessary.
3. If the pressure is low, add air until you reach the recommended amount.
4. If you overfill the tire, release air by pushing on the metal stem in the center of the tire valve.
5. Recheck the tire pressure with the tire gauge.
6. Be sure to put the valve caps back on the valve stems. They help prevent leaks by keeping out dirt and moisture.

Inspect your tires frequently for proper inflation as well as wear and damage. Always use a tire pressure gauge.

Tires with too much or too little pressure wear unevenly. This could result in poor handling, loss of vehicle control, and sudden tire failure leading to accidents, injuries, and even death. The recommended cold tire pressure for your vehicle can be found in this manual and on the tire label located on the driver's side center pillar.

Tire rotation

To equalize tread wear, it is recommended that the tires be rotated every 10,000 km or sooner if irregular wear develops.

During rotation, check the tires for correct balance.

When rotating tires, check for uneven wear and damage. Abnormal wear is usually caused by incorrect tire pressure, improper wheel alignment, out of-balance wheels, severe braking or severe cornering. Look for bumps or bulges in the tread or side of tire. Replace the tire if you find either of these conditions. Replace the tire if fabric or cord is visible. After rotation, be sure to bring the front and rear tire pressures to specification and check lug

nut tightness. (proper torque is 11~13 kgf·m)

Refer to "Tires and wheels" on page 9-6.

Disc brake pads should be inspected for wear whenever tires are rotated.

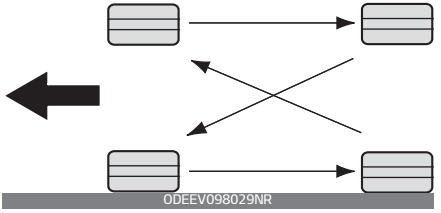

Rotate radial tires that have an asymmetric tread pattern only from front to rear and not from right to left.

⚠ WARNING

Mixing tires

Do not mix bias ply and radial ply tires under any circumstances. This may cause unusual handling characteristics.

Wheel alignment and tire balance

The wheels on your vehicle were aligned and balanced carefully at the factory to give you the longest tire life and best overall performance.

In most cases, you will not need to have your wheels aligned again. However, if you notice unusual tire wear or your vehicle pulling one way or the other, the alignment may need to be reset.

If you notice your vehicle vibrating when driving on a smooth road, your wheels may need to be rebalanced.

⚠ CAUTION

Wheel weight

Improper wheel weights can damage your vehicle's aluminum wheels. Use only approved wheel weights.

Tire replacement

If the tire is worn evenly, a tread wear indicator will appear as a solid band across the tread.

This shows there is less than 1.6 mm of tread left on the tire. Replace the tire when this happens.

Do not wait for the band to appear across the entire tread before replacing the tire.

The Anti-lock Brake System (ABS) works by comparing the speed of the wheels. The tire size affects wheel speed. When replacing tires, all 4 tires must use the same size originally supplied with the vehicle. Using tires of a different size can cause the ABS and Electronic Stability Control (ESC) to work irregularly.

It is best to replace all four tires at the same time. If that is not possible, or necessary, then replace the two front or two rear tires as a pair. Replacing just one tire can seriously affect your vehicle's handling.

NOTICE

We recommend that when replacing tires, use the same originally supplied with the vehicles. If not, that affects driving performance.

Compact spare tire replacement (if equipped)

A compact spare tire has a shorter tread life than a regular size tire.

Replace it when you can see the tread wear indicator bars on the tire. The replacement compact spare tire should be the same size and design tire as the one provided with your new vehicle and should be mounted on the same compact spare tire wheel. The compact spare tire is not designed to be mounted on a regular size wheel, and the compact spare tire wheel is not designed for mounting a regular size tire.

Wheel replacement

When replacing the metal wheels for any reason, make sure the new wheels are equivalent to the original factory units in diameter, rim width and offset.

A wheel with an incorrect size may adversely affect many things: wheel and bearing life, braking and stopping abilities, handling characteris-

tics, ground clearance, body-to-tire clearance, snow chain clearance, speedometer and odometer calibration, headlight aiming and bumper height.

⚠ CAUTION

Wheels

Wheels that do not meet Kia specifications may fit poorly and result in damage to the vehicle or unusual handling and poor vehicle control.

Tire traction

Tire traction can be reduced if you drive on worn tires, tires that are improperly inflated or on slippery road surfaces.

Tires should be replaced when tread wear indicators appear. Slow down whenever there is rain, snow or ice on the road to reduce the possibility of losing control of the vehicle.

Tire maintenance

In addition to proper inflation, correct wheel alignment helps to decrease tire wear.

If you find a tire is worn unevenly, have your dealer check the wheel alignment.

When you have new tires installed, make sure they are balanced. This will increase vehicle ride comfort and tire life. Additionally, a tire should always be rebalanced if it is removed from the wheel.

Tire sidewall labeling

This information identifies and describes the fundamental characteristics of the tire and also provides the Tire Identification Number (TIN) for safety standard certification.

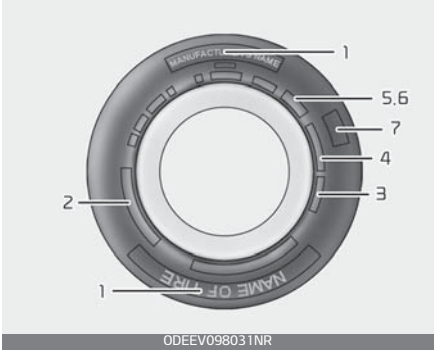

ODEEV098031NR

The TIN can be used to identify the tire in case of a recall.

1. Manufacturer or brand name

Manufacturer or Brand name is shown.

2. Tire size designation

A tire's sidewall is marked with a tire size designation. You will need this information when selecting replacement tires for your vehicle. The following explains what the letters and numbers in the tire size designation mean.

Example tire size designation:

(These numbers are provided as an example only; your tire size designator could vary depending on your vehicle.)

225/45R17 91V

- 225: Tire width in millimeters.
- 45: Aspect ratio. The tire's section height as a percentage of its width.
- R: Tire construction code (Radial).
- 17: Rim diameter in inches.
- 91: Load Index, a numerical code associated with the maximum load the tire can carry.
- V: Speed Rating Symbol. See the speed rating chart in this section for additional information.

Wheel size designation

Wheels are also marked with important information that you need if you ever have to replace one. The following explains what the letters and numbers in the wheel size designation mean.
Example wheel size designation:
7.0JX17

- 7.0: Rim width in inches.
- J: Rim contour designation.
- 17: Rim diameter in inches.

Tire speed ratings

The chart below lists many of the different speed ratings currently being used for passenger vehicle tires. The speed rating is part of the tire size designation on the sidewall of the tire. This symbol corresponds to that tire's designed maximum safe operating speed.

Speed Rating Symbol	Maximum Speed
S	180 km/h
T	190 km/h
H	210 km/h
V	240 km/h
W	270 km/h
Y	300 km/h

3. Checking tire life

Any tires that are over 6 years old, based on the manufacturing date, should be replaced by new ones. You can find the manufacturing date on the tire sidewall (possibly on the inside of the wheel), displaying the DOT code. The DOT code is a series of numbers on a tire consisting of numbers and English letters. The manufacturing date is designated by the last four digits (characters) of the DOT code.

DOT: XXXX XXXX 0000

The front part of the DOT means a plant code number, tire size and tread pattern and the last four numbers indicate week and year manufactured.

For example:

DOT XXXX XXXX 1620 represents that the tire was produced in the 16th week of 2020.

⚠ WARNING

Tire age

Replace tires within the recommended time frame. Failure to replace tires as recommended can result in sudden tire failure, which could lead to a loss of control and an accident.

4. Tire ply composition and material

The number of layers or plies of rubber- coated fabric in the tire. Tire manufacturers also must indicate the materials in the tire, which include steel, nylon, polyester, and others. The letter "R" means radial ply construction; the letter "D" means diagonal or bias ply construction; and the letter "B" means belted-bias ply construction.

5. Maximum permissible inflation pressure

This number is the greatest amount of air pressure that should be put in the tire. Do not exceed the maximum permissible inflation pressure.

Refer to "Tires and wheels" on page 9-6 for recommended inflation pressure.

6. Maximum load rating

This number indicates the maximum load in kilograms and pounds that can be carried by the tire. When replacing the tires on the vehicle, always use a tire that has the same load rating as the factory installed tire.

7. Uniform tire quality grading

Quality grades can be found where applicable on the tire sidewall between tread shoulder and maximum section width.

For example:
- TREADWEAR 200
- TRACTION AA
- TEMPERATURE A

Tires degrade over time, even when they are not being used. Regardless of the remaining tread, we recommend that tires be replaced after approximately six (6) years of normal service. Heat caused by hot climate or frequent high loading conditions can accelerate the aging process.

Tread wear

The tread wear grade is a comparative rating based on the wear rate of the tire when tested under controlled conditions on a specified government test course. For example, a tire graded 150 would wear one-and-a-half times (1½) as well on the government course as a tire graded 100.
The relative performance of tires depends upon the actual conditions of their use. Performance may depart significantly from the norm due to variations in driving habits, service practices and differences in road characteristics and climate.
These grades are molded on the side-walls of passenger vehicle tires. The tires available as standard or optional equipment on your vehicle may vary with respect to grade.

Traction – AA, A, B & C

The traction grades, from highest to lowest, are AA, A, B and C. Those grades represent the tire's ability to stop on wet pavement as measured under controlled conditions on specified government test surfaces of asphalt and concrete. A tire marked C may have poor traction performance.
The traction grade assigned to this tire is based on straight-ahead braking traction tests, and does not include acceleration, cornering, hydroplaning, or peak traction characteristics.

Temperature –A, B & C

The temperature grades are A (the highest), B, and C, representing the tire's resistance to the generation of heat and its ability to dissipate heat when tested under controlled conditions on a specified indoor laboratory test wheel.
Sustained high temperature can cause the material of the tire to degenerate and reduce tire life, and excessive temperature can lead to sudden tire failure. Grades B and A represent higher levels of performance on the laboratory test wheel than the minimum required by law.

⚠ WARNING

The traction grade assigned to this tire is based on straight-ahead braking traction tests, and does not include acceleration, cornering, hydroplaning, or peak traction characteristics.

⚠ WARNING

Tire temperature

The temperature grade for this tire is established for a tire that is properly inflated and not overloaded. Excessive speed, Under inflation, or excessive loading, either separately or in combination, can cause heat build-up and possible sudden tire failure. This can cause loss of vehicle control and serious injury or death.

Tire terminology and definitions

Refer to the following for detailed definitions of the terms that are found in the tire description.

Air Pressure The amount of air inside the tire pressing outward on the tire. Air pressure is expressed in pounds per square inch (psi) or kilopascal (kPa).

Accessory Weight The combined weight of optional accessories. Some examples of optional accessories are automatic transmission, power seats, and air conditioning.

Aspect Ratio The relationship of a tire's height to its width.

Belt A rubber coated layer of cords that is located between the plies and the tread. Cords may be made from steel or other reinforcing materials.

Bead The tire bead contains steel wires wrapped by steel cords that hold the tire onto the rim.

Bias Ply Tire A pneumatic tire in which the plies are laid at alternate angles less than 90 degrees to the centerline of the tread.

Cold Tire Pressure The amount of air pressure in a tire, measured in pounds per square inch (psi) or kilopascals (kPa) before a tire has built up heat from driving.

Curb Weight The weight of a motor vehicle with standard and optional equipment (including the maximum capacity of fuel, oil and coolant), but without passengers and cargo.

DOT Markings The DOT code includes the Tire Identification Number (TIN), an alphanumeric designator which can also identify the tire manufacturer, production plant, brand and date of production.

GVWR Gross Vehicle Weight Rating

GAWR FRT Gross Axle Weight Rating for the Front axle.

GAWR RR Gross Axle Weight Rating for the Rear axle.

Intended Outboard Sidewall The side of an asymmetrical tire that must always face outward when mounted on a vehicle.

Kilopascal (kPa) The metric unit for air pressure.

Light truck (LT) tire A tire designated by its manufacturer as primarily intended for use on lightweight trucks or multipurpose passenger vehicles.

Load ratings The maximum load that a tire is rated to carry for a given inflation pressure.

Load Index An assigned number ranging from 1 to 279 that corre- sponds to the load carrying capacity of a tire.

Maximum Inflation Pressure The maximum air pressure to which a cold tire may be inflated. The maxi- mum air pressure is molded onto the sidewall.

Maximum Load Rating The load rat- ing for a tire at the maximum per- missible inflation pressure for that tire.

Maximum Loaded Vehicle Weight The sum of curb weight; accessory weight; vehicle capacity weight; and production options weight.

Normal Occupant Weight The num- ber of occupants a vehicle is designed to seat multiplied by 68 kg (150 lbs.).

Occupant Distribution Designated seating positions.

Outward Facing Sidewall The side of a asymmetrical tire that has a par- ticular side that faces outward when mounted on a vehicle. The outward facing sidewall bears white lettering or bears manufacturer, brand, and/or model name molding that is higher or deeper than the same moldings on the inner facing sidewall.

Passenger (P-Metric) Tire A tire used on passenger cars and some light duty trucks and multipurpose vehicles.

Ply A layer of rubber-coated parallel cords.

Pneumatic tire A mechanical device made of rubber, chemicals, fabric and steel or other materials, that, when mounted on an automotive wheel, provides the traction and contains the gas or fluid that sus- tains the load.

Production options weight The combined weight of installed regular production options weighing over 2.3 kg (5 lb.) in excess of the stan- dard items which they replace, not previously considered in curb weight or accessory weight. Examples include heavy duty brakes, ride lev- elers, roof rack, heavy duty battery, and special trim.

Recommended Inflation Pressure Vehicle manufacturer's recom- mended tire inflation pressure and shown on the tire placard.

Radial Ply Tire A pneumatic tire in which the ply cords that extend to the beads are laid at 90 degrees to the centerline of the tread.

Rim A metal support for a tire and upon which the tire beads are seated.

Sidewall The portion of a tire between the tread and the bead.

Speed Rating An alphanumeric code assigned to a tire indicating the maximum speed at which a tire can operate.

Traction The friction between the tire and the road surface. The amount of grip provided.

Tread The portion of a tire that comes into contact with the road.

Treadwear Indicators Narrow bands, sometimes called "wear bars," that show across the tread of a tire when only 1.6 mm (2/32 inch) of tread remains.

UTQGS Uniform Tire Quality Grading Standards, a tire information system that provides consumers with ratings for a tire's traction, temperature and treadwear. Ratings are determined by tire manufacturers using government testing procedures. The ratings are molded into the sidewall of the tire.

Vehicle Capacity Weight The weight of designated seating positions multiplied by 68 kg (150 lbs.) plus the rated cargo and luggage load.

Vehicle Maximum Load on the Tire Load on an individual tire due to curb and accessory weight plus maximum occupant and cargo weight.

Vehicle Normal Load on the Tire Load on an individual tire that is determined by distributing to each axle its share of the curb weight, accessory weight, and normal occupant weight and driving by 2.

Vehicle Placard A label permanently attached to a vehicle showing the original equipment tire size and recommended inflation pressure.

All season tires

Kia specifies all season tires on some models to provide good performance for use all year round, including snowy and icy road conditions.

All season tires are identified by ALL SEASON and/or M+S (Mud and Snow) on the tire sidewall. Snow tires have better snow traction than all season tires and may be more appropriate in some areas.

Summer tires

Kia specifies summer tires on some models to provide superior performance on dry roads.

Summer tire performance is substantially reduced in snow and ice. Summer tires do not have the tire traction rating M+S (Mud and Snow) on the tire side wall. if you plan to operate your vehicle in snowy or icy conditions, Kia recommends the use of snow tires or all season tires on all four wheels.

Snow tires

If you equip your vehicle with snow tires, they should be the same size and have the same load capacity as the original tires.

Snow tires should be installed on all four wheels; otherwise, poor handling may result.

Snow tires should carry 4 psi (28 kPa) more air pressure than the pressure recommended for the standard tires on the tire label on the driver's side of the center pillar, or up to the maximum pressure shown on the tire sidewall, whichever is less.

Do not drive faster than 120 km/h (75 mph) when your vehicle is equipped with snow tires.

⚠ WARNING

Do not use summer tires at temperatures below 7 °C (45 °F) or when driving on snow or ice. At temperatures below 7 °C (45 °F), summer tires can lose elasticity, and therefore traction and braking power as well. Change the tires on your vehicle to winter or all-weather tires of the same size as the standard tires of the vehicle. Both types of tires are identified by the M+S (Mud and Snow) marking. Using summer tires at very cold temperatures could cause cracks to form, thereby damaging the tires permanently.

Tire chains

Tire chains, if necessary, should be installed on the front wheels.

Be sure that the chains are installed in accordance with the manufac¯turer's instructions.

To minimize tire and chain wear, do not continue to use tire chains when they are no longer needed.

- When driving on roads covered with snow or ice, drive at less than 30 km/h (20 mph).
- Use the SAE "S" class or wire chains.
- If you hear noise caused by chains contacting the body, retighten the chain to avoid contact with the vehicle body.
- To prevent body damage, retighten the chains after driving 0.5~1.0 km (0.3~0.6 miles).
- Do not use tire chains on vehicles equipped with aluminum wheels. In unavoidable circumstance, use a wire type chain.
- Use wire chains less than 12 mm (0.47 inches) to prevent damage to the chain's connection.

Radial-ply tires

Radial-ply tires provide improved tread life, road hazard resistance and smoother high speed ride.

The radial-ply tires used on this vehicle are of belted construction, and are selected to complement the ride and handling characteristics of your vehicle. Radial-ply tires have the same load carrying capacity, as bias-ply or bias belted tires of the same size, and use the same rec¯ommended inflation pressure.

Mixing of radial-ply tires with bias-ply or bias belted tires is not recom¯mended. Any combinations of radial-ply and bias-ply or bias belted tires when used on the same vehicle will seriously deteriorate vehicle handling. The best rule to follow is: Identical radial-ply tires should always be used as a set of four.

Longer wearing tires can be more susceptible to irregular tread wear. It is very important to follow the tire rotation interval shown in this sec¯tion to achieve the tread life poten¯tial of these tires. Cuts and punctures in radial-ply tires are repairable only in the tread area, because of sidewall flexing. Consult your tire dealer for radial-ply tire repairs.

Low aspect ratio tire (if equipped)

Low aspect ratio tires, whose aspect ratio is lower than 50, are provided for sporty looks.

Because the low aspect ratio tires are optimized for handling and braking, it may be more uncomfortable to ride in and there is more noise compare with normal tires.

⚠ CAUTION

Because the sidewall of the low aspect ratio tire is shorter than the normal, the wheel and tire of the low aspect ratio tire is easier to be damaged. So, follow the instructions below.

- When driving on a rough road or off road, drive cautiously because tires and wheels may be damaged. And after driving, inspect tires and wheels.
- When passing over a pothole, speed bump, manhole, or curb stone, drive slowly so that the tires and wheels are not damaged.
- If the tire is impacted, we recommend that you inspect the tire condition or contact an authorized Kia dealer.
- To prevent damage to the tire, inspect the tire condition and pressure every 3,000 km.

⚠ CAUTION

- It is not easy to recognize the tire damage with your own eyes. But if there is the slightest hint of tire damage, even though you cannot see the tire damage with your own eyes, have the tire checked or replaced because the tire damage may cause air leakage from the tire.
- If the tire is damaged by driving on a rough road, off road, pothole, manhole, or curb stone, it will not be covered by the warranty.
- You can find out the tire information on the tire sidewall.

Fuses

A vehicle's electrical system is protected from electrical overload damage by fuses.

Blade type

ODEEV098032NR

Cartridge type

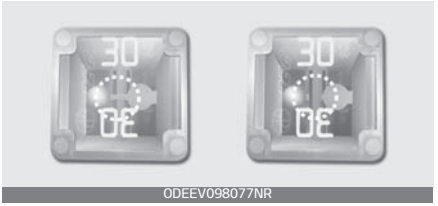

ODEEV098077NR

Multi fuse

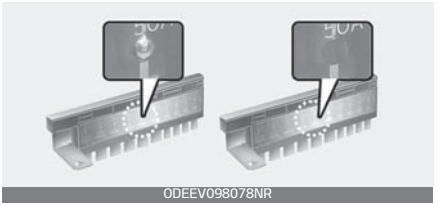

ODEEV098078NR

BFT

ODEEV098079NR

* Left side: Normal, Right side: Blown

This vehicle has 2 (or 3) fuse panels, one located in the driver's side panel bolster, the other in the engine compartment near the battery.

If any of your vehicle's lights, accessories, or controls do not work, check the appropriate circuit fuse. If a fuse has blown, the element inside the fuse will melt.

If the electrical system does not work, first check the driver's side fuse panel.

If the replacement fuse blows, this indicates an electrical problem. Avoid using the system involved and immediately consult a professional workshop. Kia recommends to visit an authorized Kia dealer/service partner.

Three kinds of fuses are used: blade type for lower amperage rating, cartridge type, and multi fuse for higher amperage ratings.

⚠ WARNING

Fuse replacement

- Never replace a fuse with anything but another fuse of the same rating.
- A higher capacity fuse could cause damage and possibly a fire.
- Never install a wire or aluminum foil instead of the proper fuse – even as a temporary repair. It may cause extensive wiring damage and a possible fire.
- Do not arbitrarily modify or add-on electric wiring to the vehicle.

⚠ CAUTION

Do not use a screwdriver or any other metal object to remove fuses because it may cause a short circuit and damage the system.

✻ NOTICE

- When replacing a fuse, turn the ignition 'OFF' and turn off switches of all electrical devices then remove battery (-) terminal.
- The actual fuse/relay panel label may differ from equipped items.

⚠ WARNING

Electrical Fire

Always ensure replacements fuses and relays are securely fastened when installed. Failure to do so can result in a vehicle fire.

Do not remove fuses, relays and terminals fastened with bolts or nuts. The fuses, relays and terminals may be fastened incompletely, and it may cause a possible fire. If fuses, relays and terminals fastened with bolts or nuts are blown, we recommend that you consult a professional workshop. Kia recommends to visit an authorized Kia dealer/service partner.

⚠ CAUTION

When replacing a blown fuse or relay, make sure the new fuse or relay fits tightly into the clips. Failure to tightly install the fuse or relay may cause damage to the wiring and electric systems.

⚠ CAUTION

- Do not input any other objects except fuses or relays into fuse/relay terminals such as a screwdriver or wiring. It may cause contact failure and system malfunction.
- Do not plug in screwdrivers or aftermarket wiring into the terminal originally designed for fuse and relays only. The electrical system and wiring of the vehicle interior may be damaged or burned due to contact failure.
- If you directly connect the wire on the taillight or replace the bulb which is over the regulated capacity to install trailers etc., the inner junction block can get burned.

⚠ WARNING

Electrical wiring repairs

All electrical repairs should be performed by authorized Kia dealerships using approved Kia parts. Using other wiring components, especially when retrofitting multimedia or theft alarm system, car phone or radio may cause vehicle damage and increase the risk of a vehicle fire.

✻ NOTICE

Remodeling Prohibited

Do not rewire your vehicle in any way as doing so may affect the performance of several safety features in your vehicle. Rewiring your vehicle may also void your warranty and cause you to be responsible for any subsequent vehicle damage which may result.

Replacing inner panel fuse

1. Turn the ignition switch and all other switches off.
2. Open the fuse panel cover.

OSP2I079028

3. Pull the suspected fuse straight out. Use the removal tool provided on the engine fuse panel cover.

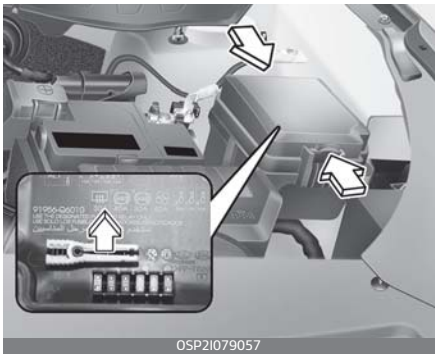

4. Check the removed fuse; replace it if it is blown.
   Spare fuses are provided in the engine compartment fuse panel.
5. Push in a new fuse of the same rating, and make sure it fits tightly in the clips.

If it fits loosely, we recommend that you consult a professional workshop. Kia recommends to visit an authorized Kia dealer/service partner.

If you do not have a spare, use a fuse of the same rating from a circuit you may not need for operating the vehicle, such as the power outlet fuse.

If the head lamp, turn signal lamp, stop signal lamp, fog lamp, DRL, tail lamp, High Mounted Stop Lamp (HMSL) do not work and the fuses are OK, check the fuse panel in the engine compartment. If a fuse is blown, it must be replaced.

Replacing engine compartment fuse

1. Turn the ignition switch and all other switches off.
2. Remove the fuse panel cover by pressing the tab and pulling the cover up.

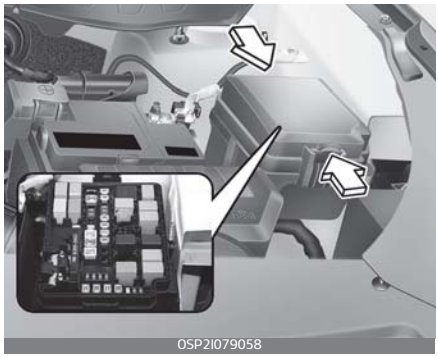

3. Check the removed fuse; replace it if it is blown. To remove or insert the fuse, use the fuse puller in the engine compartment fuse panel.
4. Push in a new fuse of the same rating, and make sure it fits tightly in the clips. If it fits loosely, we recommend that you consult a professional workshop. Kia recommends to visit an authorized Kia dealer/service partner.

⚠ CAUTION

After checking the fuse panel in the engine compartment, securely install the fuse panel cover through the audible clicking sound.

If not, electrical failures may occur from water contact.

Main fuse (Multi fuse)

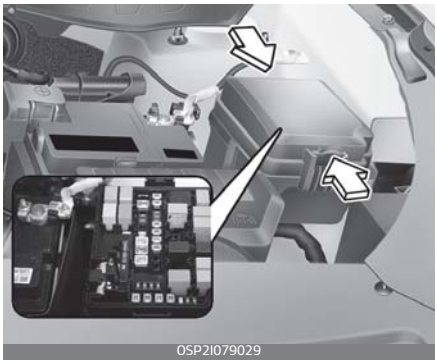

If the multi fuse is blown, it must be removed as follows:

1. Turn the ignition switch and all other switches off.
2. Disconnect the negative battery cable.
3. Remove the nuts shown in the picture above.
4. Replace the fuse with a new one of the same rating.
5. Reverse these steps to reinstall the multi fuse.

✻ NOTICE

If the multi fuse is blown, consult a professional workshop. Kia recommends to consult an authorized Kia dealer/service partner.

Driver's side fuse panel

OSP2I079032

NOTICE

Not all fuse panel descriptions in this manual may be applicable to your vehicle. It is accurate at the time of printing. When you inspect the fuse panel in your vehicle, refer to the fuse panel label on the inside of the fuse cover. This diagram will provide you with the specific information for your vehicles.

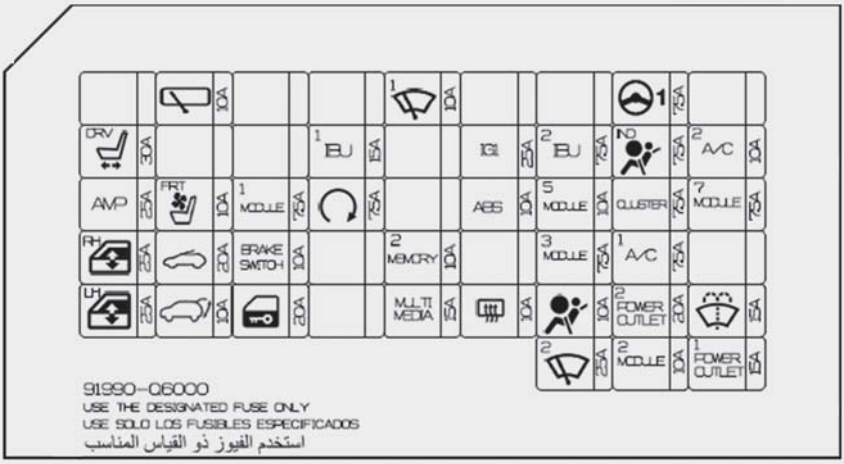

OSP2I079033

Refer to the following table for a description of the fuse.

Fuse Name	Symbol	Fuse rating	Circuit Protected
P/SEAT (DRV)	DRV	30 A	Driver Seat Manual Switch
AMP	AMP	25 A	AMP (Amplifier)
P/WDW RH	RH	25 A	Power Window Relay RH, Driver Safety Power Window Module
P/WDW LH	LH	25 A	Power Window Relay LH, Driver Safety Power Window Module
WIPER RR		10 A	Engine Room Block (Rear Wiper Relay), Rear Wiper Motor
SEAT VENT FRT	FRT	10 A	Front Air Ventilation Seat Control Module
SUNROOF		20 A	Sunroof Unit
TAIL GATE OPEN		10 A	Tail Gate Relay
MODULE 1	1 MODULE	7.5 A	Hazard Switch, Data Link Connector
BRAKE SWITCH	BRAKE SWITCH	10 A	Stop Lamp Switch, IBU (Integrated Body Control Unit)
DOOR LOCK		20 A	Door Lock Relay, Door Unlock Relay
IBU1	1 IBU	15 A	IBU (Integrated Body Control Unit)
START		7.5 A	[Manual Transmission & Without Smart Key] Ignition Lock & Clutch Switch [Manual Transmission & With Smart Key] Engine Room Block (Start Relay), IBU (Integrated Body Control Unit), ECM (Engine Control Module), PCM (Power train Control Module) [Auto Transmission] Transmission Range Switch
WIPER FRT1	1	10 A	IBU (Integrated Body Control Unit), ECM (Engine Control Module)/PCM (Power train Control Module)
MEMORY 2	2 MEMORY	10 A	ICM (Integrated Circuit Module) Relay Box (Outside Mirror Folding/Unfolding Relay), Instrument Cluster, Air Conditioner Control Module, Security Indicator, Head-Up Display
MULTI MEDIA	MULTI MEDIA	15 A	Audio., Audio/Video & Navigation Head Unit
IG1	IG1	25 A	Engine Room Block (Fuse - F33, F34, F35)
ABS	ABS	10 A	ESP (Electronic Stability Program) Control Module, Data Link Connector

Fuse Name	Symbol	Fuse rating	Circuit Protected
REAR HAETED		10 A	ECM (Engine Control Module), PCM (Power train Control Module), Air Conditioner Control Module
IBU2	2 IBU	7.5 A	IBU (Integrated Body Control Unit)
MODULE 5	5 MODULE	10 A	Electro Chromic Mirror, IBU (Integrated Body Control Unit), Front Wireless Charger, Auto Transmission Shift Lever Indicator, Driver Console Switch, Audio, Audio/Video & Navigation Head Unit, Air Conditioner Control Module, Crash Pad Switch, AMP (Amplifier), Front Air Ventilation Seat Control Module
MODULE 3	3 MODULE	7.5 A	Stop Lamp Switch, Auto Transmission Shift Lever
AIR BAG		10 A	SRS (Supplemental Restraint System) Control Module
FRT WIPER2	2	25 A	Engine Room Block (Wiper 1 Relay), Front Wiper Motor
MDPS	1	7.5 A	MDPS (Motor Driven Power Steering) Unit
A/BAG IND	IND	7.5 A	Cluster
CLUSTER	CLUSTER	7.5 A	Instrument Cluster, Head-Up Display
A/C1	1 A/C	7.5 A	Engine Room Block (Blower Relay), Air Conditioner Control Module
POWER OUTLET2	2 POWER OUTLET	20 A	Front Power Outlet #1
MODULE 2	2 MODULE	10 A	USB Charger, IBU (Integrated Body Control Unit), Audio, Surround View Monitor, Audio/Video & Navigation Head Unit, Air Purifier, AMP (Amplifier), Power Outside Mirror Switch
A/C2	2 A/C	10 A	Air Conditioner Control Module
MODULE 7	2 MODULE	7.5 A	Head Lamp LH/RH, IBU (Integrated Body Control Unit), Crash Pad Switch, Front Air Ventilation Seat Control Module
WASHER		15 A	Multifunction Switch
POWER OUTLET1	1 POWER OUTLET	15 A	Front Power Outlet #1

Engine compartment fuse panel

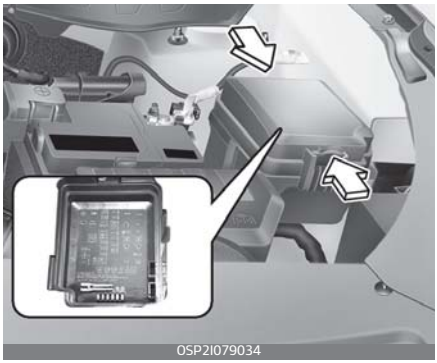

OSP2I079034

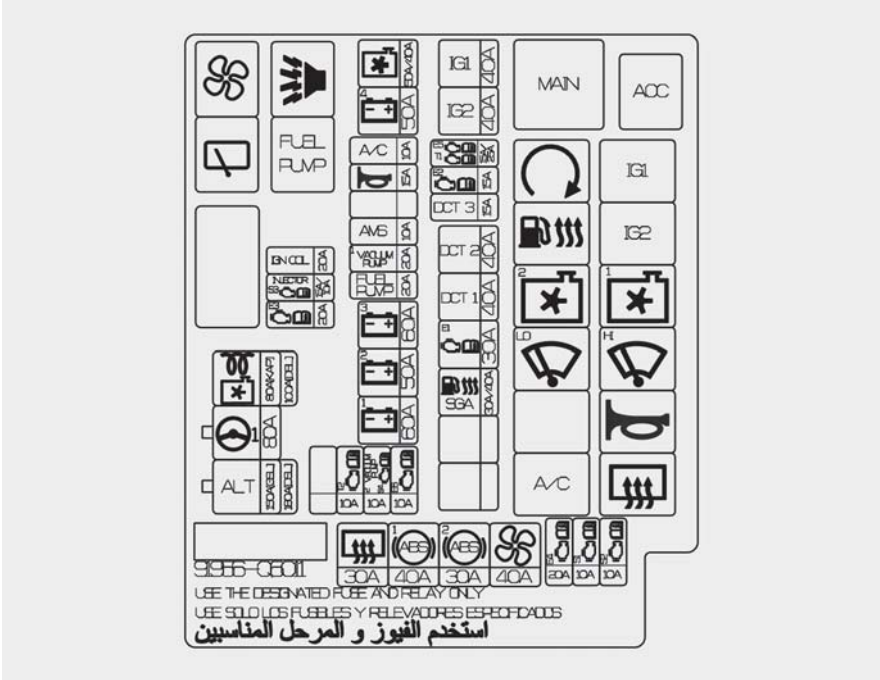

OSP2I070186

Refer to the following table for a description of the fuse.

Fuse Name	Symbol	Fuse rating	Circuit Protected
ALT	ALT	150 A	[ALL] Alternator, Rear Defogger Relay, ESP (Electronic Stability Program) Control Module, ESP (Electronic Stability Program) Control Module, Blower Relay [Smartstream G1.4 T-GDi] Cooling Fan Motor
		180 A	[(Diesel) 1.5 VGT] Glow Relay Unit
MDPS1	1	80 A	MDPS (Motor Driven Power Steering) Unit
C/FAN BLDC		80 A	[Smartstream G1.4 T-GDi] Cooling Fan Motor
GLOW		100 A	[(Diesel) 1.5 VGT] Glow Relay Unit
RR HTD		30 A	Rear Defogger Relay
ABS1	1 ABS	40 A	ESP (Electronic Stability Program) Control Module
ABS2	2 ABS	30 A	ESP (Electronic Stability Program) Control Module
BLOWER		40 A	Blower Relay
ECU4	E4	20 A	ECM (Engine Control Module), PCM (Power train Control Module)
SENSOR 1	S1	10 A	[ALL] Fuel Pump Relay [(Diesel) 1.5 VGT] Inlet Metering Unit
SENSOR 2	S2	10 A	[ALL] Oxygen Sensor (Up/Down), Oil Control Valve #1/#2, Variable Intake Solenoid Valve, Purge Control Solenoid Valve [Smartstream G1.4 T-GDi] Air Conditioner Relay [Smartstream G1.5] Cooling Fan 2 Relay, Air Conditioner Relay, Cooling Fan 1 Relay [(Diesel) 1.5 VGT] Cooling Fan 2 Relay, Air Conditioner Relay, Cooling Fan 1 Relay
SGA	SGA	40 A	[Smartstream G1.4 T-GDi] Smart Gear Actuator
FULL HTR		30 A	[(Diesel) 1.5 VGT] Fuel Heater Relay
ECU1	E1	30 A	Main Relay
DCT1	DCT1	40 A	TCM (Transmission Control Module)
DCT2	DCT2	40 A	TCM (Transmission Control Module)

Fuse Name	Symbol	Fuse rating	Circuit Protected
DCT3	DCT3	15 A	TCM (Transmission Control Module)
ECU2	E2	15 A	ECM (Engine Control Module), PCM (Power train Control Module)
ECU5	E5	15 A	ECM (Engine Control Module), PCM (Power train Control Module)
TCU1	T1	25 A	ECM (Engine Control Module), PCM (Power train Control Module), TCM (Transmission Control Module)
IG2	IG2	40 A	Start Relay, IG2 Relay, Ignition Switch
IG1	IG1	40 A	ACC Relay, IG1 Relay, Ignition Switch
B+1	1	60 A	ICU Junction Block (Long Term Load Auto Cut Relay, Fuse - Hazard Switch, Data Link Connector, Stop Lamp Switch, IBU (Integrated Body Control Unit))
B+2	2	50 A	ICU Junction Block (IPS4, IPS5, IPS6, IPS8, IPS9, IPS11, IPS12, IPS17)
B+3	3	60 A	ICU Junction Block (IPS1, IPS2, IPS3, IPS7, IPS10, IPS13, IPS16, IPS18, IPS20)
FUEL PUMP	FUEL PUMP	20 A	Fuel Pump Relay
VACUUM PUMP1	1 VACUUM PUMP	20 A	[Smartstream G1.4 T-GDi] Vacuum Pump
AMS	AMS	10 A	[(Diesel) 1.5 VGT] Battery Sensor
HORN		15 A	Horn Relay, B/A Horn Relay
A/C	A/C	10 A	Air Conditioner Relay
B+4	4	50 A	ICU Junction Block (Fuse - Driver Seat Manual Switch, AMP (Amplifier), Power Window Relay RH, Driver Safety Power Window Module, Power Window Relay LH, Driver Safety Power Window Module, Front Air Ventilation Seat Control Module, Sunroof Unit, Tail Gate Relay)
C/FAN		40 A	[Smartstream G1.5, Smartstream G1.4 T-GDi] Cooling Fan 2 Relay, Cooling Fan 1 Relay
C/FAN		50 A	[(Diesel) 1.5 VGT] Cooling Fan 2 Relay, Cooling Fan 1 Relay
ECU6	E6	10 A	ECM (Engine Control Module), PCM (Power train Control Module)
VACUUM PUMP2	2 VACUUM PUMP	10 A	[Smartstream G1.4 T-GDi] Vacuum Pump

Fuse Name	Symbol	Fuse rating	Circuit Protected
SENSOR 4	S4	10 A	Glow Relay Unit, Fuel Filter Warning Sensor
TCU2	T2	10 A	[Manual Transmission] Speed Sensor [Auto Transmission] Transmission Range Switch, TCM (Transmission Control Module)
ECU3	E3	20 A	ECM (Engine Control Module), PCM (Power train Control Module)
INJECTOR	INJECTOR	15 A	[Smartstream G1.5] Injector #1/#2/#3/#4
SENSOR 3	S3	10 A	[ALL] Mass Air Flow Sensor, PM Sensor, Electronic VGT (Variable Geometry Turbocharger) Actuator [Smartstream G1.4 T-GDi] Cooling Fan Motor [(Diesel) 1.5 VGT] EGR Cooling Bypass Solenoid Valve
IGN COIL	IGN COIL	20 A	Ignition Coil #1/#2/#3/#4, Condenser

Refer to the following table for the relay type.

Relay Name	Symbol	Type
Main Relay	MAIN	MINI
Start Relay		MICRO
Fuel Heater Relay		MICRO
Cooling Fan 2 Relay	2	MICRO
Wiper 1 Relay	1	MICRO
A/C Relay	A/C	MICRO
ACC Relay	ACC	MICRO
IG1 Relay	IG1	MICRO
IG2 Relay	IG2	MICRO
Cooling Fan 1 Relay	1	MICRO
Wiper 2 Relay	2	MICRO
Horn Relay		MICRO
Rear Defogger Relay		MICRO
Blower Relay		MICRO
Rear Wiper Relay		MICRO
B/A Horn Relay		MICRO
Fuel Pump Relay	FUEL PUMP	MICRO

Light bulbs

Light bulbs are installed in various parts of the vehicle to provide lighting inside and outside the vehicle as well as to alert other vehicles.

Bulb replacement precaution

Please keep extra bulbs on hand with appropriate wattage ratings in case of emergencies.

Refer to "Bulb wattage" on page 9-4.

When changing lamps, first turn off the vehicle at a safe place, firmly apply the parking brake and detach the battery's negative (-) terminal.

⚠ WARNING

Working on the lights

Prior to working on the light, firmly apply the parking brake, ensure that turn the ignition switch and turn off the lights to avoid sudden movement of the vehicle and burning your fingers or receiving an electric shock.

Use only bulbs of the specified wattage.

⚠ CAUTION

Light replacement

Be sure to replace the burned-out bulb with one of the same wattage rating. Otherwise, it may cause damage to the fuse or electric wiring system.

Fully install light bulbs and any parts used to secure them. Failure to do so may result in heat damage, fire, or water entering the headlight unit. This may damage the headlights or cause condensation to build up on the lens. To prevent damage or fire, make sure bulbs are fully seated and locked.

⚠ CAUTION

Headlamp Lens

To prevent damage, do not clean the headlamp lens with chemical solvents or strong detergents.

✻ NOTICE

- If the light bulb or lamp connector is removed while the lamp is still on, the fuse box's electronic system may log it as a malfunction. Therefore, a lamp malfunction incident may be recorded as a Diagnostic Trouble Code (DTC) in the fuse box.
- It is normal for an operating lamp to flicker momentarily. This is due to a stabilization function of the vehicle's electronic control device. If the lamp lights up normally after momentarily blinking, then it is functioning as normal. However, if the lamp continues to flicker several times or turns off completely, there may be an error in the vehicle's electronic control device. So we recommend that you have the vehicle checked by an authorized Kia dealer immediately.

✻ NOTICE

We recommend that the headlight aiming be adjusted by an authorized Kia dealer after an accident or after the headlight assembly is reinstalled.

✻ NOTICE

You can find moisture inside the lens of lamps after a car wash or driving in the rain. It is a natural event caused by the temperature difference between the inside and the outside of the lamp and does not mean a problem with its functions. The moisture inside the lamp would disappear if you drive the vehicle with the headlamp turned on, however, the level at which the moisture is removed may differ depending on the size / location / condition of the lamp. If the moisture continues to stay inside the lamp, have the vehicle checked by a professional workshop. Kia recommends to visit an authorized Kia dealer/service partner.

If you don't have the necessary tools, the correct bulbs and the expertise, consult a professional workshop. Kia recommends to visit an authorized Kia dealer/service partner. In many cases, it is difficult to replace vehicle light bulbs because other parts of the vehicle must be removed before you can get to the bulb. This is especially true if you have to remove the headlamp assembly to get to the bulb(s).

Removing/installing the headlamp assembly can result in damage to

the vehicle. If non-genuine parts or substandard bulbs are used, it may lead to blowing a fuse or other wiring damages.

Do not install extra lamps or LEDs to the vehicle. If additional lights are installed, it may lead to lamp malfunctions and flickering. Additionally, the fuse box and other writing may be damaged.

Light bulb position (Front)

Headlamp - Type A

OSP2I079059

Headlamp - Type B

OSP2I079060

Headlamp - Type C

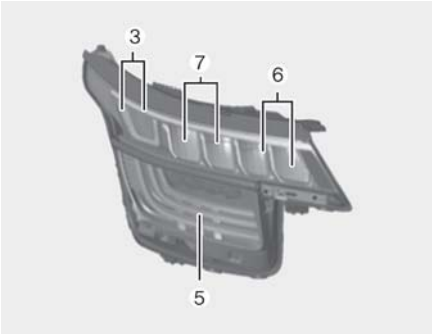

OSP2I079173

Fog lamp - Type A

OSP2I079061

Fog lamp - Type B

OSP2I079062

Position lamp

OSP2I079063

1. Headlamp (High & Low) (Bulb type)
2. Position lamp / Daytime running lamp (Bulb type)
3. Position lamp / Daytime running lamp (LED type)
4. Turn signal lamp (Bulb type)
5. Turn signal lamp (LED type)
6. Headlamp (High) (LED type)
7. Headlamp (Low) (LED type)
8. Front fog lamp (Bulb type)
9. Front fog lamp (LED type)
10. Position lamp (auxiliary) (LED type)

Light bulb position (Rear)

Rear combination lamp - Type A

OSP2079033

Rear combination lamp – Type B

OSP2079034

License Plate lamp

OSP2I079038

High Mounted Stop Lamp (HMSL)

1. Tail lamp (Bulb type)
2. Tail lamp / Stop lamp (Bulb type)
3. Tail lamp / Stop lamp (LED type)
4. Stop lamp (LED type)
5. Back up lamp (Bulb type)
6. Rear turn signal lamp (Bulb type)
7. License plate lamp (Bulb type)
8. High mounted stop lamp (Bulb type)

Light bulb position (Side)

1. Side direction indicator lam (Bulb)
2. Side repeater lamp (LED type)

Headlamp bulb

OSK3078081NR

⚠ WARNING

Halogen bulbs

Handle halogen bulbs with care.

- Halogen bulbs contain pressurized gas that will produce flying pieces of glass if broken.
- Always handle them carefully, and avoid scratches and abrasions. If the bulbs are lit, avoid contact with liquids. Never touch the glass with bare hands. Residual oil may cause the bulb to overheat and burst when lit. A bulb should be operated only when installed in a headlamp.
- If a bulb becomes damaged or cracked, replace it immediately and carefully dispose of it.
- Wear eye protection when changing a bulb. Allow the bulb to cool down before handling it.

Replacing headlamp (low/high) / turn signal lamp / position lamp / daytime running lamp bulb (bulb type) (headlamp type A)

OSP2I079064

1. Headlamp (low and high)
2. Turn signal lamp
3. Position lamp / daytime running lamp

To prepare replacing the lamp bulb:

1. Open the hood.

To replace the headlamp (low/high) bulb:

1. Remove the headlight bulb cover by turning it counterclockwise.
2. Disconnect the headlight bulb socket-connector.
3. Unsnap the headlight bulb retaining wire by depressing the end and pushing it upward.
4. Remove the bulb from the headlight assembly.
5. Install a new headlight bulb and snap the headlight bulb retaining wire into position by aligning the wire with the groove on the bulb.
6. Connect the headlight bulb socket connector.

7. Install the headlight bulb cover by turning it clockwise.

To replace the turn signal lamp, position lamp, daytime running lamp bulb:

1. Remove the socket from the assembly by turning the socket counterclockwise until the tabs on the socket align with the slots on the assembly.
2. Insert a new bulb by inserting it into the socket and rotating it until it locks into place.
3. Install the socket in the assembly by aligning the tabs on the socket with the slots in the assembly.
4. Push the socket into the assembly and turn the socket clockwise.

Replacing headlamp (low/high) / turn signal lamp bulb (bulb type) (headlamp type B)

1. Headlamp (low and high)
2. Turn signal lamp

To prepare replacing the lamp bulb:

1. Open the hood.

To replace the headlamp (low/high) bulb:

1. Remove the headlight bulb cover by turning it counterclockwise.
2. Disconnect the headlight bulb socket-connector.
3. Unsnap the headlight bulb retaining wire by depressing the end and pushing it upward.
4. Remove the bulb from the headlight assembly.
5. Install a new headlight bulb and snap the headlight bulb retaining wire into position by aligning the wire with the groove on the bulb.
6. Connect the headlight bulb socket connector.
7. Install the headlight bulb cover by turning it clockwise.

To replace the turn signal lamp:

1. Remove the socket from the assembly by turning the socket counterclockwise until the tabs on the socket align with the slots on the assembly.
2. Insert a new bulb by inserting it into the socket and rotating it until it locks into place.
3. Install the socket in the assembly by aligning the tabs on the socket with the slots in the assembly.
4. Push the socket into the assembly and turn the socket clockwise.

Replacing position lamp / daytime running lamp (LED type) (headlamp type B)

If the position lamp / daytime running lamp LED (1) does not operate, we recommend that the system be checked by a professional workshop. Kia recommends to visit an authorized Kia dealer/service partner.

OSP2I079178

The LED lamps cannot be replaced as a single component because it is an integrated unit. The LED lamps have to be replaced with the unit.

A skilled technician should check or repair the position lamp / daytime running lamp (LED), for it may damage related parts of the vehicle.

Replacing headlamp (high and low) / position lamp / daytime running lamp / turn signal lamp (LED type) (headlamp type C)

If the position lamp / daytime running lamp LED (1) does not operate, we recommend that the system be checked by a professional workshop. Kia recommends to visit an authorized Kia dealer/service partner.

OSP2079039

The LED lamps cannot be replaced as a single component because it is an integrated unit. The LED lamps have to be replaced with the unit.

A skilled technician should check or repair the position lamp / daytime running lamp (LED), for it may damage related parts of the vehicle.

Replacing position lamp (auxiliary) (LED type)

If the auxiliary lamp LED (1) does not operate, we recommend that the system be checked by a professional workshop. Kia recommends to

visit an authorized Kia dealer/service partner.

OSP2I079065

The LED lamps cannot be replaced as a single component because it is an integrated unit. The LED lamps have to be replaced with the unit.

A skilled technician should check or repair the auxiliary lamp (LED), for it may damage related parts of the vehicle.

Replacing front fog lamp (bulb/LED type)

If the front fog lamp (type A, B) does not operate, we recommend that the system be checked by a professional workshop. Kia recommends to visit an authorized Kia dealer/service partner.

Type A

OSP2079040

Type B

OSP2079041

Replacing side repeater lamp (LED Type) bulb

If the side repeater lamp LED (1), does not operate, we recommend that the system be checked by a professional workshop. Kia recommends to visit an authorized Kia dealer/service partner.

OSP2I079040

The LED lamps cannot be replaced as a single component because it is an integrated unit. The LED lamps have to be replaced with the unit.

A skilled technician should check or repair the side repeater lamp (LED), for it may damage related parts of the vehicle.

We recommend that the system be checked by a professional workshop. Kia recommends to visit an authorized Kia dealer/service partner.

Replacing side repeater lamp bulb (bulb type)

OSP2I079177

1. Remove the lamp assembly from the vehicle by prying the lens and pulling the assembly out.
2. Disconnect the bulb electrical connector.
3. Separate the socket and the lens parts by turning the socket counterclockwise until the tabs on the socket align with the slots on the lens part.
4. Remove the bulb by pulling it straight out.
5. Insert a new bulb in the socket.
6. Reassemble the socket and the lens part.
7. Connect the bulb electrical connector.
8. Reinstall the lamp assembly to the body of the vehicle.

Replacing rear turn signal lamp / back up lamp bulb / tail lamp / tail and stop lamp bulb (bulb type) (rear combination lamp type A, B)

Type A

OSP2079043

Type B

OSP2079044

1. Turn signal lamp
2. Back up lamp
3. Tail lamp
4. Tail and stop lamp

To place the lamp bulb:

1. Open the tailgate.
2. Loosen the light assembly retaining screws with a cross-tip screwdriver.
3. Remove the rear combination light assembly from the body of the vehicle.
4. Remove the socket from the assembly by turning the socket counterclockwise until the tabs on the socket align with the slots on the assembly.
5. Remove the bulb from the socket by pressing it in and rotating it counterclockwise until the tabs on the bulb align with the slots in the socket.
6. Pull the bulb out of the socket.
7. Insert a new bulb by inserting it into the socket and rotating it until it locks into place.
8. Install the socket in the assembly by aligning the tabs on the socket with the slots in the assembly.
9. Push the socket into the assembly and turn the socket clockwise.
10. Reinstall the light assembly to the body of the vehicle.

Replacing stop lamp / tail and stop lamp (LED type) (rear combination lamp type B)

If the stop lamp (1) or tail and stop lamp (2) does not operate, we recommend that the system be checked by a professional workshop. Kia recommends to visit an authorized Kia dealer/service partner.

OSP2079045

The LED lamps cannot be replaced as a single component because it is an integrated unit. The LED lamps have to be replaced with the unit.

A skilled technician should check or repair the LED lamps, for it may damage related parts of the vehicle.

Replacing High Mounted Stop Lamp bulb (bulb type)

1. Open the tailgate.
2. Remove the mounting screws of both sides of the service cover using a Philips screwdriver.

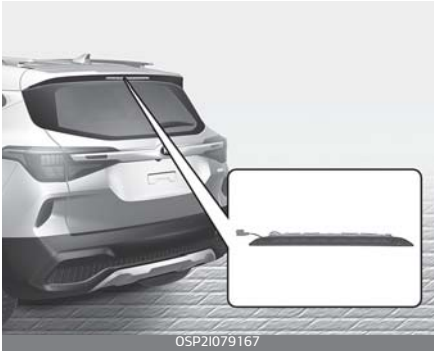
OSP2I079167

3. Remove the three round head cap nut fixing the high mounted stop lamp using a wrench.
4. Pull out the high mounted stop lamp assembly and unplug the connector.

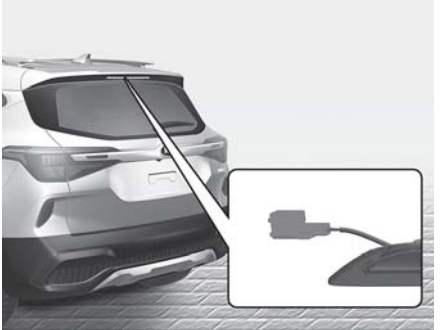
OSP2I079168

5. Remove the cover from the assembly.

OSP2I079169

6. Pull out the bulb from the socket.

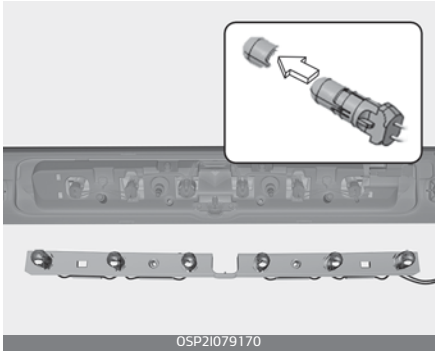

OSP2I079170

7. Insert a new bulb in the socket.
8. Install the high mounted stop lamp in the reverse order of removal.

Replacing license plate lamp bulb

OSP2I079172

1. Using a screwdriver, gently pry the lamp assembly from interior.
2. Remove the bulb by pulling it straight out.
3. Install a new bulb in the socket.
4. Install the lamp assembly to interior.

Replacing map lamp (bulb type) bulb

OSP2I079174

WARNING

Prior to working on the Interior lamps, ensure that the "OFF" button is depressed to avoid burning your fingers or receiving an electric shock.

1. Using a flat-blade screwdriver, gently pry the lens cover from lamp housing.
2. Remove the bulb by pulling it straight out.
3. Install a new bulb in the socket.
4. Align the lens cover tabs with the lamp housing notches and snap the lens into place.

NOTICE

Be careful not to dirty or damage the lens, lens tab, and plastic housings.

Replacing map lamp (LED type) bulb

If the map lamp (LED) does not operate, we recommend that the system be checked by a professional workshop. Kia recommends to visit an authorized Kia dealer/service partner.

OSP2I079068

The LED lamps cannot be replaced as a single component because they are part of an integrated unit. The LED lamps have to be replaced with the unit.

A skilled technician should check or repair the map lamp (LED), for it may damage related parts of the vehicle.

We recommend that the system be checked by a professional workshop. Kia recommends to visit an authorized Kia dealer/service partner.

Replacing room lamp (bulb type) bulb

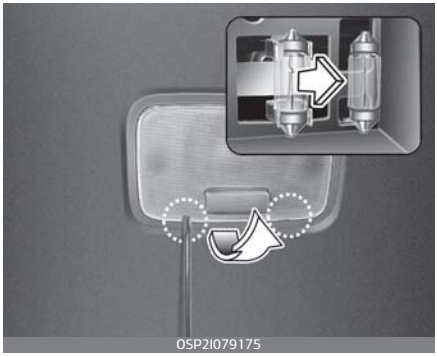
OSP2I079175

⚠ WARNING

Prior to working on the Interior lamps, ensure that the "OFF" button is depressed to avoid burning your fingers or receiving an electric shock.

1. Using a flat-blade screwdriver, gently pry the lens cover from lamp housing.
2. Remove the bulb by pulling it straight out.
3. Install a new bulb in the socket.
4. Align the lens cover tabs with the lamp housing notches and snap the lens into place.

✻ NOTICE

Be careful not to dirty or damage the lens, lens tab, and plastic housings.

Replacing room lamp (LED type) bulb

If the Room lamp (LED) does not operate, have the vehicle checked by a professional workshop. Kia recommends to visit an authorized Kia dealer/service partner.

OSP2I079070

The LED lamps cannot be replaced as a single component because they are part of an integrated unit. The LED lamps have to be replaced with the unit.

A skilled technician should check or repair the Room lamp (LED), for it may damage related parts of the vehicle.

Replacing luggage room lamp (bulb type) bulb

0SP2I079044

1. Using a flat-blade screwdriver, gently pry the lens cover from lamp housing.
2. Remove the bulb by pulling it straight out.
3. Install a new bulb in the socket.
4. Align the lens cover tabs with the lamp housing notches and snap the lens into place.

⚠ CAUTION

Be careful not to dirty or damage the lens, lens tab, and plastic housings.

Appearance care

Use the information in the following sections to keep the exterior and interior of your vehicle clean.

Exterior care

Use the information in the following sections to maintain the exterior of your vehicle. Keeping the exterior clean is not only aesthetically pleasing, but it also helps to prolong the life of the vehicle.

✻ NOTICE

If you park the vehicle around a stainless signboard or windshield building etc., the plastic exterior trim (bumper, spoiler, garnish, lamp, outside mirror etc.) may be damaged by reflected sunlight from the external structure. To avoid damaging the plastic exterior trim, park the vehicle away from the areas where the reflected light may occur or use a vehicle cover. (Depending on the vehicle, the type of exterior trim applied such as spoiler may differ.)

Exterior general caution

It is very important to follow the label directions when using any chemical cleaner or polish. Read all warning and caution statements that appear on the label.

Finish maintenance

Washing

To help protect your vehicle's finish from rust and deterioration, wash it thoroughly and frequently at least once a month with lukewarm or cold water.
If you use your vehicle for off-road driving, you should wash it after each off-road trip. Pay special attention to the removal of any accumulation of salt, dirt, mud, and other foreign materials. Make sure the drain holes in the lower edges of the doors and rocker panels are kept clear and clean.
Insects, tar, tree sap, bird droppings, industrial pollution and similar deposits can damage your vehicle's finish if not removed immediately. Even prompt washing with plain water may not completely remove all these deposits. A mild soap, safe for use on painted surfaces, may be used.
After washing, rinse the vehicle thoroughly with lukewarm or cold water. Do not allow soap to dry on the finish.
After washing the vehicle, test the brakes while driving slowly to see if they have been affected by water. If braking performance is impaired, dry the brakes by applying them lightly while maintaining a slow forward speed.

⚠ CAUTION

- Do not use strong soap, chemical detergents or hot water, and do not wash the vehicle in direct sunlight or when the body of the vehicle is warm.
- Be careful when washing the side windows of your vehicle, especially with high-pressure water. Water may leak through the windows and wet the interior.
- To prevent damage to the plastic parts and lamps, do not clean with chemical solvents or strong detergents.

⚠ WARNING

After washing the vehicle, test the brakes while driving slowly to see if they have been affected by water. If braking performance is impaired, dry the brakes by applying them lightly while maintaining a slow forward speed.

High-pressure washing

When using high-pressure washers, make sure to maintain sufficient distance from the vehicle. Insufficient clearance or excessive pressure can lead to component damage or water penetration.
Do not spray the camera, sensors or its surrounding area directly with a high pressure washer. Shock applied from high pressure water may

cause the device to not operate normally.
Do not bring the nozzle tip close to boots (rubber or plastic covers) or connectors as they may be damaged if they come into contact with high pressure water.

⚠ CAUTION

Wetting engine compartment

OSP2I079045

- Water washing in the engine compartment including high pressure water washing may cause the failure of electrical circuits located in the engine compartment.
- Never allow water or other liquids to come in contact with electrical/electronic components and air duct inside the vehicle as this may damage them.

Waxing

Wax the vehicle when water will no longer bead on the paint.
Always wash and dry the vehicle before waxing. Use a good quality liquid or paste wax, and follow the manufacturer's instructions. Wax all metal trim to protect it and to maintain its luster.
Removing oil, tar, and similar materials with a spot remover will usually strip the wax from the finish. Be sure to re-wax these areas even if the rest of the vehicle does not yet need waxing.
Be careful not to touch the lens when waxing the lamps.

⚠ CAUTION

Drying vehicle

- Wiping dust or dirt off the body with a dry cloth will scratch the finish.
- Do not use steel wool, abrasive cleaners, acid detergents or strong detergents containing high alkaline or caustic agents on chrome-plated or anodized aluminum parts. This may result in damage to the protective coating and cause discoloration or paint deterioration.

Finish damage repair

Deep scratches or stone chips in the painted surface must be repaired promptly. Exposed metal will quickly rust and may develop into a major repair expense.

NOTICE

If your vehicle is damaged and requires any metal repair or replacement, be sure the body shop applies anti-corrosion materials to the parts repaired or replaced.

Bright-metal maintenance

To remove road tar and insects, use a tar remover, not a scraper or other sharp object.

To protect the surfaces of bright metal parts from corrosion, apply a coating of wax or chrome preservative and rub to a high luster.

During winter weather or in coastal areas, cover the bright metal parts with a heavier coating of wax or preservative. If necessary, coat the parts with non-corrosive petroleum jelly or other protective compound.

Underbody maintenance

Corrosive materials used for ice and snow removal and dust control may collect on the underbody. If these materials are not removed, accelerated rusting can occur on underbody parts such as the fuel lines, frame, floor pan and exhaust system, even though they have been treated with rust protection.

Thoroughly flush the vehicle underbody and wheel openings with lukewarm or cold water once a month, after off-road driving and at the end of each winter. Pay special attention to these areas because it is difficult to see all the mud and dirt. It will do more harm than good to wet down the road grime without removing it. The lower edges of the doors, rocker panels, and frame members have drain holes that should not clog with dirt; trapped water in these areas can cause rusting.

Aluminum wheel maintenance

The aluminum wheels are coated with a clear protective finish.

- Do not use any abrasive cleaner, polishing compound, solvent, or wire brushes on aluminum wheels. They may scratch or damage the finish.
- Clean the wheel when it has cooled.
- Use only a mild soap or neutral detergent, and rinse thoroughly with water. Also, be sure to clean the wheels after driving on salted roads. This helps prevent corrosion.
- Avoid washing the wheels with high speed vehicle wash brushes.
- Do not use any alkaline or acid detergents It may damage and corrode the aluminum wheels coated with a clear protective finish.

Corrosion protection

Protecting your vehicle from corrosion

By using the most advanced design and construction practices to combat corrosion, we produce vehicles of the highest quality. However, this is only part of the job. To achieve the long-term corrosion resistance your vehicle can deliver, the owner's cooperation and assistance is also required.

Common causes of corrosion

The most common causes of corrosion on your vehicle are:

- Road salt, dirt and moisture that is allowed to accumulate underneath the vehicle.
- Removal of paint or protective coatings by stones, gravel, abrasion or minor scrapes and dents which leave unprotected metal exposed to corrosion.

High-corrosion areas

If you live in an area where your vehicle is regularly exposed to corrosive materials, corrosion protection is particularly important. Some of the common causes of accelerated corrosion are road salts, dust control chemicals, ocean air and industrial pollution.

Moisture breeds corrosion

Moisture creates the conditions in which corrosion is most likely to occur. For example, corrosion is accelerated by high humidity, particularly when temperatures are just above freezing. In such conditions, the corrosive material is kept in contact with the vehicle's surface by moisture that evaporates slowly. Mud is particularly corrosive because it dries slowly and holds moisture in contact with the vehicle. Although the mud appears to be dry, it can still retain the moisture and promote corrosion.
High temperatures can also accelerate corrosion of parts that are not properly ventilated so the moisture can be dispersed. For all these reasons, it is particularly important to keep your vehicle clean and free of mud or accumulations of other materials. This applies not only to the visible surfaces but particularly to the underside of the vehicle.

To help prevent corrosion

You can help prevent corrosion from beginning by observing the following:

Keep your vehicle clean

The best way to prevent corrosion is to keep your vehicle clean and free of corrosive materials. Attention to the underside of the vehicle is particularly important.

If you live in a high-corrosion area — where road salts are used, near the ocean, areas with industrial pollution, acid rain, etc.—, you should take extra care to prevent corrosion. In winter, hose off the underside of your vehicle at least once a month and be sure to clean the underside thoroughly when winter is over.

When cleaning underneath the vehicle, give particular attention to the components under the fenders and other areas that are hidden from view. Do a thorough job; just dampening the accumulated mud rather than washing it away will accelerate corrosion rather than prevent it. Water under high pressure and steam are particularly effective in removing accumulated mud and corrosive materials.

When cleaning lower door panels, rocker panels and frame members, be sure that drain holes are kept open so that moisture can escape and not be trapped inside to accelerate corrosion.

Keep your garage dry

Don't park your vehicle in a damp, poorly ventilated garage. This creates a favorable environment for corrosion. This is particularly true if you wash your vehicle in the garage or drive it into the garage when it is still wet or covered with snow, ice or mud. Even a heated garage can contribute to corrosion unless it is well ventilated so moisture is dispersed.

Keep paint and trim in good condition

Scratches or chips in the finish should be covered with "touch-up" paint as soon as possible to reduce the possibility of corrosion. If bare metal is showing through, the attention of a qualified body and paint shop is recommended.

Bird droppings: Bird droppings are highly corrosive and may damage painted surfaces in just a few hours. Always remove bird droppings as soon as possible.

Don’t neglect the interior

Moisture can collect under the floor mats and carpeting and cause corrosion. Check under the mats periodically to be sure the carpeting is dry. Use particular care if you carry fertilizers, cleaning materials or chemicals in the vehicle.

These should be carried only in proper containers and any spills or leaks should be cleaned up, flushed with clean water and thoroughly dried.

Interior care

Use the information in the following sections to maintain the interior of your vehicle.

Interior general precautions

Prevent chemicals such as perfume, cosmetic oil, sun cream, hand cleaner, and air freshener from contacting the interior parts because they may cause damage or discoloration. If they do contact the interior parts, wipe them off immediately. If necessary, use a vinyl cleaner, see product instructions for correct usage.

⚠ CAUTION

Electrical components

Never allow water or other liquids to come in contact with electrical/electronic components inside the vehicle as this may damage them.

⚠ CAUTION

Leather

When cleaning leather products (steering wheel, seats etc.), use neutral detergents or low alcohol content solutions. If you use high alcohol content solutions or acid/alkaline detergents, the color of the leather may fade or the surface may get stripped off.

Taking care of leather seats

- Vacuum the seat periodically to remove dust and sand on the seat. It will prevent abrasion or damage of the leather and maintain its quality.
- Wipe the natural leather seat cover often with dry or soft cloth.
- Sufficient use of a leather protective may prevent abrasion of the cover and helps maintain the color. Be sure to read the instructions and consult a specialist when using leather coating or protective agents.
- Leather with bright colors (beige, cream beige) is easily contaminated and clear in appearance. Clean the seats frequently.
- Avoid wiping with wet cloth. It may cause the surface to crack.

Cleaning the leather seats

Remove all contaminations instantly. Refer to instructions below for removal of each contaminant.

- Cosmetic products (sunscreen, foundation, etc.)
  - Apply cleansing cream on a cloth and wipe the contaminated point. Wipe off the cream with a wet cloth and remove water with a dry cloth.
- Beverages (coffee, soft drink, etc.)
  - Apply a small amount of neutral detergent and wipe until contaminations do not smear.
- Oil
  - Remove oil instantly with absorbable cloth and wipe with stain remover for natural leather only.
- Chewing gum
  - Harden the gum with ice and remove gradually.

Fabric seat cover (if equipped)

Please clean the fabric seats regularly with a vacuum cleaner in consideration of fabric material characteristics. If they are heavily soiled with beverage stains, etc., use a suitable interior cleaner. To prevent damage to seat covers, wipe off the seat covers down to the seams with a large wiping motion and moderate pressure using a soft sponge or microfiber cloth.

Velcro closures on clothing or sharp objects may cause snagging or scratches on the surface of the seats.

Make sure not to rub such objects against the surface.

Cleaning the upholstery and interior trim

Vinyl

Remove dust and loose dirt from vinyl with a whisk broom or vacuum cleaner. Clean vinyl surfaces with a vinyl cleaner.

Fabric

Remove dust and loose dirt from fabric with a whisk broom or vacuum cleaner. Clean with a mild soap solution recommended for upholstery or carpets. Remove fresh spots immediately with a fabric spot cleaner. If fresh spots do not receive immediate attention, the fabric can be stained and its color can be affected. Also, its fire-resistant properties can be reduced if the material is not properly maintained. Using anything but recommended cleaners and procedures may affect the fabric's appearance and fire-resistant properties.

Cleaning the lap/shoulder belt webbing

Clean the belt webbing with any mild soap solution recommended for cleaning upholstery or carpet. Follow the instructions provided with the soap. Do not bleach or re-dye the webbing because this may weaken it.

Cleaning the interior window glass

If the interior glass surfaces of the vehicle become fogged (that is, covered with an oily, greasy or waxy film), they should be cleaned with a glass cleaner. Follow the directions on the glass cleaner container.

⚠ CAUTION

Rear window

Do not scrape or scratch the inside of the rear window. This may result in damage of the rear window defroster grid.

Emission control system

The emission control system of your vehicle is covered by a written limited warranty. Please see the warranty information contained in the Warranty & Consumer Information manual in your vehicle.

Your vehicle is equipped with an emission control system to meet all applicable emission regulations. There are three emission control systems, as follows.

1. Crankcase emission control system
2. Evaporative emission control system
3. Exhaust emission control system

In order to assure the proper function of the emission control systems, it is recommended that you have your vehicle inspected and maintained by an authorized Kia dealer in accordance with the maintenance schedule in this manual.

Caution for the Inspection and Maintenance Test (With Electronic Stability Control (ESC) system)

- **To prevent the vehicle from misfiring during dynamometer testing, turn the ESC off by pressing the ESC switch.**
- **After dynamometer testing is completed, turn the ESC back on by pressing the ESC switch again.**

1. Crankcase emission control system

The Positive Crankcase Ventilation system is employed to prevent air pollution caused by blow-by gases being emitted from the crankcase. This system supplies fresh filtered air to the crankcase through the air intake hose. Inside the crankcase, the fresh air mixes with blow-by gases, which then pass through the Positive Crankcase Ventilation (PCV) valve into the induction system.

2. Evaporative emission control (including Onboard Refueling Vapor Recovery (ORVR)) system

The evaporative emission control system is designed to prevent fuel vapors from escaping into the atmosphere. (The ORVR system is designed to allow the vapors from the fuel tank to be loaded into a canister while refueling at the gas station, preventing the escape of fuel vapors into the atmosphere.)

Canister

Fuel vapors generated inside the fuel tank are absorbed and stored in the onboard canister. When the engine is running, the fuel vapors absorbed in the canister are drawn into the surge tank through the Purge Control Solenoid Valve.

Purge Control Solenoid Valve (PCSV)

The Purge Control Solenoid Valve (PCSV) is controlled by the Engine Control Module (ECM); when the engine coolant temperature is low during idling, the PCSV closes so that evaporated fuel is not taken into the engine. After the engine warms up during ordinary driving, the PCSV opens to introduce evaporated fuel to the engine.

3. Exhaust emission control system

The exhaust emission control system is a highly effective system which controls exhaust emissions while maintaining good vehicle performance.

Engine exhaust gas precautions (carbon monoxide)

- Carbon monoxide can be present with other exhaust fumes. Therefore, if you smell exhaust fumes of any kind inside your vehicle, have it inspected and repaired immediately. If you ever suspect exhaust fumes are coming into your vehicle, drive it only with all the windows fully open. Have your vehicle checked and repaired immediately.

⚠ WARNING

Exhaust

Engine exhaust gases contain carbon monoxide (CO). Though color-

less and odorless, it is dangerous and could be lethal if inhaled. Follow the instructions on this page to avoid CO poisoning.

- Do not operate the engine in confined or closed areas (such as garages) any more than what is necessary to move the vehicle in or out of the area.
- When the vehicle is stopped in an open area for more than a short time with the engine running, adjust the ventilation system (as needed) to draw outside air into the vehicle.
- Never sit in a parked or stopped vehicle for any extended time with the engine running.
- When the engine stalls or fails to start, excessive attempts to restart the engine may cause damage to the emission control system.

Operating precautions for catalytic converters

⚠ WARNING

Catalytic converter

Keep away from the catalytic converter and exhaust system while the vehicle is running or immediately thereafter. The exhaust and catalytic systems are very hot and may burn you.

⚠ WARNING

Fire

- Do not park, idle or drive the vehicle over or near flammable objects, such as grass, vegetation, paper, leaves, etc. A hot exhaust system can ignite flammable items under your vehicle.
- Also, do not remove the heat sink around the exhaust system, do not seal the bottom of the vehicle or do not coat the vehicle for corrosion control. It may present a fire risk under certain conditions.

Your vehicle is equipped with a catalytic converter emission control device.
Therefore, the following precautions must be observed:

- Use only UNLEADED FUEL for gasoline (petrol) engines.
- Do not operate the vehicle when there are signs of engine malfunction, such as misfire or a noticeable loss of performance.
- Do not misuse or abuse the engine. Examples of misuse are coasting with the ignition off and descending steep grades in gear with the ignition off.
- Do not operate the engine at high idle speed for extended periods (5 minutes or more).
- Do not modify or tamper with any part of the engine or emission control system. All inspections and adjustments must be made

by a professional workshop. Kia recommends to visit an authorized Kia dealer/service partner.

- Avoid driving with an extremely low fuel level. Running out of fuel could cause the engine to misfire, damaging the catalytic converter.

Failure to observe these precautions could result in damage to the catalytic converter and to your vehicle. Additionally, such actions could void your warranties.

Gasoline Particulate Filter (GPF)/ Petrol Particulate Filter (PPF) (if equipped)

The Gasoline Particulate Filter (GPF)/Petrol Particulate Filter (PPF) system removes the soot in the exhaust gas.

The GPF system automatically burns (or oxidizes) the accumulated soot in accordance with driving situations, unlike a disposable air filter.

In other words, the accumulated soot is automatically purged out by the engine control system and by the high exhaust-gas temperature at normal/ high driving speeds.

However, when the vehicle is continually driven at repeated short distances or driven at low speed for a long time, the accumulated soot may not be automatically removed because of low exhaust gas temperature. In this case, the accumulated soot may reach a certain amount regardless of the soot oxidization process, then the GPF lamp will illuminate.

GPF Lamp stops illuminating, when the driving speed exceeds 80 km/h with engine rpm 1,500~4,000 and the gear in the 3rd position or above for approximately 30 minutes.

When the GPF lamp starts to blink or the warning message "check exhaust system" pops up even

though the vehicle was driven as mentioned above, we recommend that you have the GPF system checked by an authorized Kia dealer. With the GPF lamp blinking for an extended period of time, it may damage the GPF system and lower the fuel economy.

Diesel Particulate Filter (if equipped)

The Diesel Particulate Filter (DPF) system removes the soot in the exhaust gas.

Unlike a disposable air filter, the DPF system automatically burns (oxidizes) and removes the accumulated soot according to the driving condition. In other words, the active burning by engine control system and high exhaust gas temperature caused by normal/high driving condition burns and removes the accumulated soot. However, if the vehicle continues to be driven at repeated short distance or driven at low speed for a long time, the accumulated soot may not be automatically removed because of low exhaust gas temperature. More than a certain amount of soot deposited, the malfunction indicator light ( ) illuminates.

When the malfunction indicator light blinks, it may stop blinking by driving the vehicle at more than 60 km/h (37 mph) or at more than second gear with 1500 ~ 2500 engine rpm for a certain time (for about 25 minutes).

If the malfunction indicator light ( ) continues to be blinked or the warning massage "Check exhaust system" illuminates in spite of the procedure, visit a professional workshop and check the DPF system. Kia recommends to visit an authorized Kia dealer/service partner. If you continue to drive with the malfunction indicator light blinking for a long time, the DPF system can be damaged and fuel consumption can be worsen and engine durability can be worsen by oil dilution.

⚠ CAUTION

Diesel Fuel (if equipped with DPF)

It is recommended to use the regulated automotive diesel fuel for diesel vehicle equipped with the DPF system.

If you use diesel fuel including high sulfur (more than 50 ppm sulfur) and unspecified additives, it can cause the DPF system to be damaged and white smoke can be emitted.

Lean NOx Trap

The Lean NOx Trap (LNT) system removes the nitrogen oxide in the exhaust gas. The smell can occur in the exhaust gas depending on the quality of the fuel and it can degrade NOx reduction performance, please use the regulated automotive diesel fuel.

Specifications & Consumer information

9

Dimensions **9-2**
Engine **9-2**
Gross vehicle weight **9-3**
Luggage volume **9-3**
Air conditioning system **9-3**
Bulb wattage **9-4**
Tires and wheels **9-6**
Recommended lubricants and capacities **9-7**
• Recommended SAE viscosity number 9-8
Vehicle Identification Number (VIN) **9-10**
Vehicle certification label **9-10**
Tire specification and pressure label **9-11**
Engine number **9-11**
Air conditioner compressor label **9-12**
Refrigerant label **9-12**
Declaration of conformity **9-13**
Fuel label **9-13**
• Gasoline (Petrol) engine 9-13
• Diesel engine 9-14

SPECIFICATIONS & CONSUMER INFORMATION

Dimensions

Item	mm (in)		
Overall length	4,315 (169.9)		
Overall width	1,800 (70.9)		
Overall height	Without Roof rack	205/65R16	1,620 (63.8)
		215/60R17	1,630 (64.2)
	With Roof lack	205/65R16	1,635 (64.4)
		215/60R17	1,645 (64.8)
Tread	Front	205/65R16	1,572 (61.9)
		215/60R17	1,560 (61.4)
	Rear	205/65R16	1,595 (62.8)
		215/60R17	1,583 (62.3)
Wheelbase			2,610 (102.8)

Engine

Item	Smartstream G1.4 T-GDi	Smartstream G1.5	(Diesel) 1.5 VGT
Displacement: cc (cu in)	1,353 (82.56)	1,497 (91.35)	1,493 (91.1)
Bore x Stroke: mm (in)	71.6 x 84.0 (2.8189 x 3.3071)	75.6 x 83.38	75 X 84.5
Firing order	1-3-4-2	1-3-4-2	1-3-4-2
No. of cylinders	4, In-line	4, In-Line	4, In-line

Gross vehicle weight

Item	Smartstream G1.4 T-GDi		Smartstream G1.5		(Diesel) 1.5 VGT	
	MT	DCT	MT	IVT	MT	AT
Gross vehicle weight kg (lbs.)	1,695 (3,737)	1,705 (3,759)	1,640 (3,616)	1,665 (3,671)	1,750 (3,858)	1,745 (3,847)

Luggage volume

Item	Smartstream G1.4 T-GDi	Smartstream G1.5	(Diesel) 1.5 VGT
Luggage volume (VDA): l (cu ft)	Min: 433 l (15.29 cu ft)		
	Max: 1,401 l (49.48 cu ft)		

- Min: Behind rear seat to upper edge of the seat back.
- Max: Behind front seat to roof.

Air conditioning system

Item	Weight of volume (g)	Classification
Refrigerant	530±25	R-134a
Compressor lubricant	110±10	PAG 30

Please contact a professional workshop for more details.

Kia recommends to contact an authorized Kia dealer/service partner.

Bulb wattage

Light Bulb			Wattage	Bulb type
Front	Type A*	Low beam	60	Bulb
		High beam	60	Bulb
		Turn signal lamps	21	Bulb
		Position lamps	5	Bulb
		Daytime running lamps	21	Bulb
	Type B*	Low beam	60	Bulb
		High beam	60	Bulb
		Position lamps (1-1)	4.6	LED
		Position lamps (2-1)	1.2	LED
		Daytime running lamps (1-1)	9	LED
		Daytime running lamps (2-1)	15.1	LED
		Turn signal lamps	21	Bulb
		Position lamp (center)	1.2	LED
	Type C*	Low beam	28.8	LED
		High beam	22	LED
		Position lamps (1-1)	4.6	LED
		Position lamps (2-1)	1.2	LED
		Daytime running lamps (1-1)	9	LED
		Daytime running lamps (2-1)	15.1	LED
		Turn signal lamps	15.4	LED
		Position lamp (center)	1.2	LED
	Fog lamps (bulb)*		51	Bulb
	Fog lamps (LED)*		16.9	LED
	Side repeater lamps		5	Bulb

Light Bulb			Wattage	Bulb type
Rear	Type A*	Tail lamps (inside)	5	Bulb
		Tail lamps (outside)	5	Bulb
		Turn signal lamps	21	Bulb
		Stop lamps	21	Bulb
		Back up lamps	16	Bulb
	Type B*	Tail lamps (inside)	1.8	LED
		Tail lamps (outside)	3.5	LED
		Turn signal lamps	21	Bulb
		Stop lamps (inside)	1.8	LED
		Stop lamps (outside)	9.7	LED
		Back up lamps	16	Bulb
	License plate lamps		5	Bulb
	High mounted stop lamps		30	Bulb
Interior	Map lamps (without sunroof)		8	Bulb
	Map lamps (with sunroof)		2	LED
	Room lamps (without sunroof)		8	Bulb
	Room lamps (with sunroof)		2	LED
	Luggage lamp		10	Bulb

*: if equipped

Tires and wheels

Item	Tire size	Wheel size	Load capacity		Speed capacity		Inflation pressure [bar (psi, kPa)]				Wheel lug nut torque kgf·m (lbf·ft, N·m)
							Normal load		Maximum load		
			LI*1	kg	SS*2	km/h	Front	Rear	Front	Rear	
Full size tire (and spare tire)	205/65R16	6.0Jx16 (steel) 6.0Jx16 (alloy)	95	690	H	210	2.4 (35/240)	2.4 (35/240)	2.4 (35/240)	2.4 (35/240)	11~13 (79~94, 107~127)
	215/60R17	6.5J x 17	96	710	H	210					

*1. Load Index
*2. Speed Symbol

⚠ CAUTION

When replacing tires, use the same size originally supplied with the vehicle.
Using tires of a different size can damage the related parts or make it work irregularly.

✻ NOTICE

- We recommend that when replacing tires, use the same originally supplied with the vehicles.
  If not, that affects driving performance.
- When driving in high altitude grades, it is natural for the atmospheric pressure to decrease.
  Therefore, please check the tire pressure and add more air when necessary.
  Additionally required tire air pressure per km above sea level: 1.5 psi/km

Recommended lubricants and capacities

To help achieve proper engine and powertrain performance and durability, use only lubricants of the proper quality.
The correct lubricants also help promote engine efficiency that results in improved fuel economy.
These lubricants and fluids are recommended for use in your vehicle.

Lubricant				Volume	Classification
Engine oil*1 (drain and refill) Recommends	Petrol Engine	1.4 T-GDI		4.2 L	5W30 ACEA A5/B5
		1.5 MPI		3.8 L	0W20 API (SN Plus)
	Diesel Engine	U2 1.5 TCI		4.8 L	0W20 ACEA C5
Manual transmission fluid	Petrol Engine	1.4 T-GDI		1.5~1.6 L	SAE 70W API GL-4 TG0-9 API GL-4, SAE 70W
		1.5 MPI			
	Diesel Engine	U2 1.5 TCI			
Dual clutch transmission fluid	Petrol Engine	1.4 T-GDI		1.6-1.7 L	API GL-4, SAE 70W
		1.5 MPI			
	Diesel Engine	U2 1.5 TCI			
Automatic transmission fluid	Petrol Engine	1.6 MPI		7.2 L	ATF SP-IV
	Diesel Engine	U2 1.5 TCI		7.1 L	
Intelligent variable transmission fluid	Petrol Engine	1.5 MPI		6.7 L	SP-CVT1*2
Coolant	Petrol Engine	1.4 T-GDI	MT	7 L	Mixture of antifreeze and water (Ethylene-glycol with phosphate based coolant for cooling device
			DCT		
		1.5 MPI	MT	6.4 L	
			IVT	6.1 L	
	Diesel Engine	U2 1.5 TCI	MT	7.2 L	
			AT	7.0 L	
Brake/clutch fluid				0.7 L	SAE J1704 DOT-4 LV, FMVSS 116 DOT-4, ISO4925 CLASS-6
Fuel				50 L	-

*1. Refer to "Recommended SAE viscosity number" on page 9-8.

*2. Use only specified genuine intelligent variable transmission fluid. The use of non-specified fluid (even marked as compatible with genuine) could result in shift quality deterioration and vibrations, eventually, the transmission failure.

Recommended SAE viscosity number

⚠ CAUTION

Always be sure to clean the area around any filler plug, drain plug, or dipstick before checking or draining any lubricant. This is especially important in dusty or sandy areas and when the vehicle is used on unpaved roads. Cleaning the plug and dipstick areas will prevent dirt and grit from entering the engine and other mechanisms that could be damaged.

Engine oil viscosity (thickness) has an effect on fuel economy and cold weather operating (engine start and engine oil flowability). Lower viscosity engine oils can provide better fuel economy and cold weather performance, however, higher viscosity engine oils are required for satisfactory lubrication in hot weather.

Using oils of any viscosity other than those recommended could result in engine damage.

When choosing an oil, consider the range of temperature your vehicle will be operated in before the next oil change. Proceed to select the recommended oil viscosity from the chart.

Specifications_Consumer_information_and_Reporting_safety_def.fm Page 9 Friday, September 25, 2020 3:55 PM

Smartstream G1.4 T-GDi

Temperature Range for SAE Viscosity Numbers										
Temperature	°C	-30	-20	-10	0	10	20	30	40	50
	(°F)	-10	0	20	40	60	80	100	120	
For all countries		0W-30, 5W-30								

Smartstream G1.5

Temperature Range for SAE Viscosity Numbers										
Temperature	°C	-30	-20	-10	0	10	20	30	40	50
	(°F)	-10	0	20	40	60	80	100	120	
Except middle east*1*2		0W-20								

*1. Requires < API SN PLUS (or above) Full synthetic> grade engine oil. If a lower grade engine oil (mineral oil including Semi-synthetic) is used, then the engine oil and engine oil filter must be replaced as indicated severe maintenance condition.

*2. Middle East includes Morocco, Sudan and Egypt. IRAN, LIBIA, ALGERIA, TUNISIA

(Diesel) 1.5 VGT

Temperature Range for SAE Viscosity Numbers									
Temperature	°C	-30	-20	-10	0	10	20	30	40
	(°F)	-10	0	20	40	60	80	100	
(Diesel) 1.5 VGT		10W-30/40							
		5W-30/40							
		0W-30							
		0W-20							

Vehicle Identification Number (VIN)

The Vehicle Identification Number (VIN) is the number used in registering your vehicle and in all legal matters pertaining to its ownership, etc.

Frame number

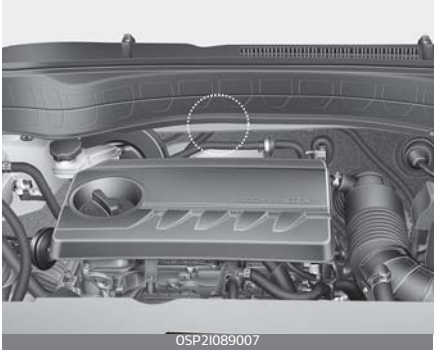

The VIN is also on a plate attached to the top of the dashboard. The number on the plate can easily be seen through the windshield from outside.

VIN label (if equipped)

Vehicle certification label

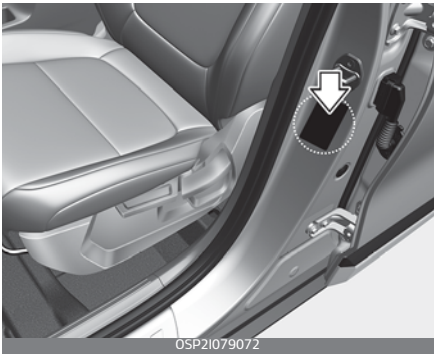

The vehicle certification label attached on the driver's (or front passenger's) side center pillar gives the vehicle identification number (VIN).

Tire specification and pressure label

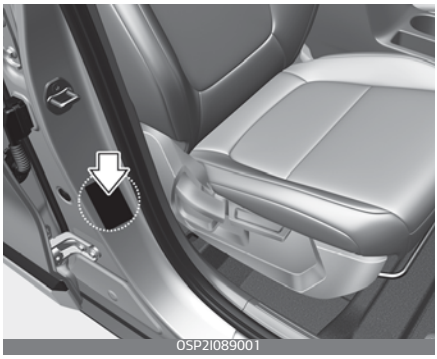
OSP2I089001

The tires supplied on your new vehicle are chosen to provide the best performance for normal driving.

The tire label located on the driver's side center pillar gives the tire pressures recommended for your vehicle.

Engine number

The engine number is stamped on the engine block as shown in the drawing.

Smartstream G1.4 T-GDi

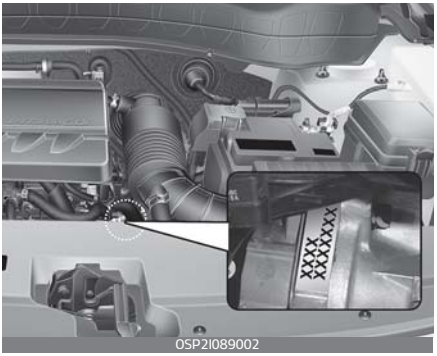
OSP2I089002

Smartstream G1.5

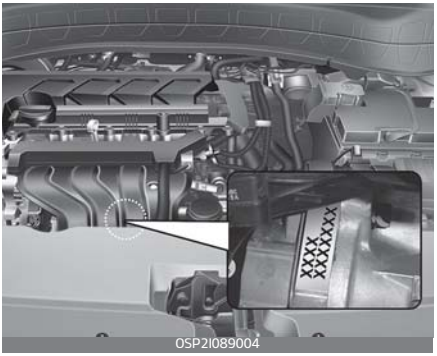
OSP2I089004

(Diesel) 1.5 VGT

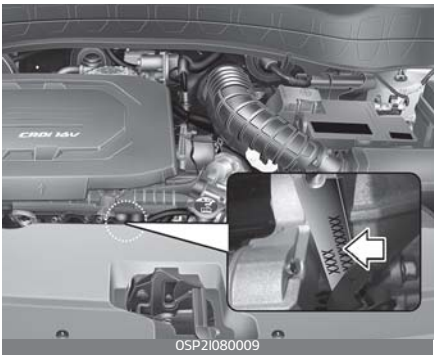
OSP2I080009

Air conditioner compressor label

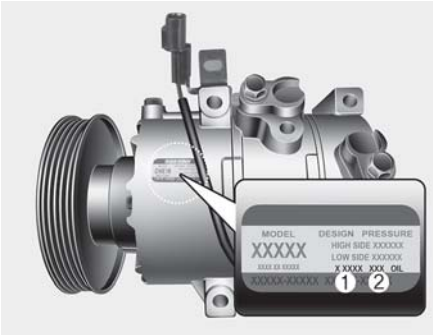

OSP2I089010

A compressor label informs you the type of compressor your vehicle is equipped with such as model, supplier part number, production number, refrigerant (1) and refrigerant oil (2).

Refrigerant label

OSP2I089006

The refrigerant label is located on the front body trim.

Declaration of conformity

CE CE 0678

The radio frequency components of the vehicle comply with requirements and other relevant provisions of Directive 1995/5/EC.

Further information including the manufacturer's declaration of conformity is available on Kia web site as follows;

http://www.kia-hotline.com

Fuel label (if equipped)

Gasoline (Petrol) engine

The fuel label is attached on the fuel filler door.

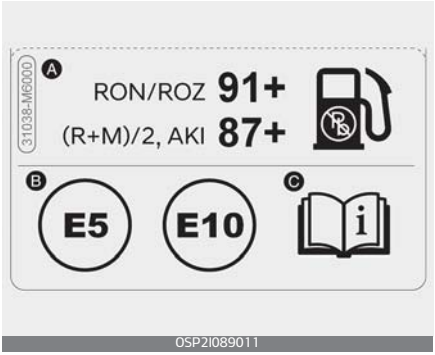

- A. Octane rating of unleaded Gasoline (Petrol)
  1. RON/ROZ: Research Octane Number
  2. (R+M)/2, AKI: Anti Knock Index
- B. Identifiers for Petrol-type fuels
  * This symbol means usable fuel. Do not use any other fuel.
- C. For further details, refer to "Gasoline (Petrol) engine" on page 1-2.

Diesel engine

The fuel label is attached on the fuel filler door.

- A. Fuel: Diesel
- B. Identifiers for FAME containing Diesel-type Fuels
  * This symbol means usable fuel. Do not use any other fuel.
- C. For further details, refer to "Diesel engine" on page 1-4.

Abbreviation A

ABBREVIATION

ABS
Anti-Lock Brake System

ACC
Accessory

AKI
Antiknock Index

AVN
Audio Video Navigation

BVM
Blind-Spot View Monitor

CC
Cruise Control

DCT
Double Clutch Transmission

DPF
Diesel Particulate Filter

DRL
Daytime Running Light

DRVM
Driving Rear View Monitor

ECM
Electric Chromic Mirror

EPS
Electric Power Steering

ESC
Electronic Stability Control

GPF
Gasoline Particulate Filter

GVW
Gross Vehicle Weight

GVWR
Gross Vehicle Weight Rating

HAC
Hill-start Assist Control

HID
High-Intensity Discharge

HMSL
High Mounted Stop Lamp

HUD
Head-Up Display

IVT
Intelligent Variable Transmission

LNT
Lean NOx Trap

MIL
Malfunction Indicator Lamp

ODO
Odometer

PCM
Powertrain Control Module

PCSV
Purge Control Solenoid Valve

PDW
Parking Distance Warning

PPF
Petrol Particulate Filter

RON
Research Octane Number

RPM
Revolution Per Minute

RVM
Rear View Monitor

SRS
Supplemental Restraint System

SVM
Surround View Monitor
(also called 360 Degree Camera)

TCI
Turbo Charger Intercooler

TCM
Transmission Control Module

T-GDI
Turbocharger Gasoline Direct Injection

TPMS
Tire Pressure Monitoring System

VIN
Vehicle Identification Number

VGT
Variable Geometry Turbocharger

VSM
Vehicle Stability Management

Index I

INDEX

3

360 degree camera 4-90

A

accumulated info display 4-63
air bag 3-42
air bag collision sensors 3-55
curtain air bag 3-53
driver's and passenger's front air bag 3-49
inflation conditions 3-56
non-inflation conditions 3-57
side air bag 3-52
SRS care 3-60
SRS components and functions 3-46
warning and indicator 3-46
air bag collision sensors 3-55
air cleaner filter 8-34
air ventilation seat 4-132
ambient light 4-130
anti-lock brake system (ABS) 6-47
appearance care 8-86
exterior care 8-86
interior care 8-92
applying the parking brake 6-46
audio system
radio 5-4
shark fin antenna 5-3
USB port 5-3
auto light 4-96
automatic climate control system 4-118
air conditioning 4-124
controlling air intake 4-122
controlling fan speed 4-124
heating and air conditioning automatically 4-119
heating and air conditioning manually 4-120
mode selection 4-121
temperature control 4-122
turning off the front air climate control 4-124
automatic transmission 6-21
operation 6-21
shift lock system 6-25
automatic transmission/ intelligent variable transmission shift indicator 4-52

B

battery 8-40
for best battery service 8-40
recharging the battery 8-42
reset items 8-43
battery saver function 4-94
before driving 6-4
blind-spot view monitor (BVM) 6-61
brake fluid 8-30
brake system 6-43
anti-lock brake system (ABS) 6-47
applying the parking brake 6-46
electronic stability control (ESC) 6-49
good braking practices 6-55
hill-start assist control (HAC) 6-54
parking brake 6-46
power brakes 6-43
releasing the parking brake 6-46
vehicle stability management (VSM) 6-53
bulb replacement precaution 8-71

C

care of seat belt 3-29
cargo area cover 4-139
center console storage 4-127
check exhaust system 6-3
child restraint system (CRS) 3-30
installing a CRS 3-33
types 3-32
child-protector rear door lock 4-22
climate control air filter 8-36

climate control system 4-107
air conditioning 4-108
air conditioning refrigerant label 4-111
checking the amount of air conditioner refrigerant and compressor lubricant 4-110
climate control air filter 4-109
heating 4-107
system operation 4-107
ventilation 4-107
closing the hood 4-32
clothes hanger 4-138
Cruise Control 6-62
accelerating temporarily with the cruise control on 6-64
cancelling cruise control 6-64
cruise control switch 6-62
decreasing the cruising speed 6-64
increasing cruise control set speed 6-64
setting cruise control speed 6-63
turning cruise control off 6-65
cup holder 4-130
curtain air bag 3-53

D

day/night rearview mirror 4-43
daytime running light (DRL) 4-95
defogging (windshield) 4-125
defroster 4-106
defrosting (windshield) 4-125
digital speedometer 4-64
door lock 4-18
child-protector rear door lock 4-22
from inside the vehicle 4-19
from outside the vehicle 4-18
door lock/unlock sound 4-15
drive info display 4-64
drive mode integrated control system 6-57
traction control 6-58
driver's and passenger's front air bag 3-49
driver's seat belt 3-19
driving at night 6-69
driving in flooded areas 6-70
driving in the rain 6-69
driving info display 4-65
driving on unpaved roads 6-70
driving rear view monitor (DRVM) function 4-82
dual clutch transmission (DCT) 6-28
operation 6-28
shift lock system 6-34
transmission ranges 6-31
dual clutch transmission shift indicator 4-53

E

economical operation 6-66
electric chromic mirror (ECM) with UVO service 4-44
electric power steering (EPS) 4-40
electronic stability control (ESC) 6-49
emergency commodity 7-29
first aid kit 7-29
triangle reflector 7-29
emergency starting 7-6
jump starting 7-6
push-starting 7-8
emergency towing 7-26
emission control system 8-94
engine compartment 8-5
engine coolant 8-27
recommended coolant 8-27
engine coolant temperature gauge 4-50
engine oil and filter (for gasoline (petrol)) 8-23
engine oil (for diesel) 8-25

engine overheats 7-9
engine start/stop button 6-10
illuminated engine start/stop button 6-10
position 6-10
starting the engine 6-13
starting the engine with smart key 6-14
exterior features 4-140
roof rack 4-140

F

floor mat anchor(s) 4-138
fog light (front) 4-98
forward/reverse parking distance warning (PDW) 4-88
non-operational conditions 4-92
operating condition 4-89
self-diagnosis 4-94
front seat adjustment for manual seat 3-6
front seat adjustment for power seat 3-7
front seat headrest 3-9
fuel economy 4-62
fuel filler door 4-33
fuel filter (for diesel) 8-33
fuel gauge 4-51
fuel requirements 1-2
fuses 8-58
replacing engine compartment fuse 8-61
replacing inner panel fuse 8-60

G

gauges 4-49
engine coolant temperature gauge 4-50
fuel gauge 4-51
odometer 4-51
outside temperature gauge 4-52
speedometer 4-49
tachometer 4-50
glove box 4-127
good braking practices 6-55

H

hazardous driving conditions 6-68
head light (low beam) 4-96
headlight (headlamp) escort function 4-106
headlight leveling device 4-99
headrest
front seat headrest 3-9
rear seat headrest 3-16
Head-Up Display (HUD) 4-80
heating and air conditioning automatically 4-119
heating and air conditioning manually 4-113, 4-120
highway driving 6-70
hill-start assist control (HAC) 6-54
hood 4-31
closing the hood 4-32
hood open warning 4-32
opening the hood 4-31
hood open warning 4-32
horn 4-42

I

illuminated engine start/stop button 6-10
immobilizer system 4-13
indicator lights 4-77
Information mode 4-56
infotainment sysem 5-3
audio system 5-3
audio (without touch screen) 5-7
radio 5-13
infotainment system
bluetooth 5-21

media player 5-16
specifications 5-32
system status icons 5-31
trademarks 5-34
inside rearview mirror 4-43
installing a CRS 3-33
instrument cluster 4-48
adjusting instrument cluster illumination 4-49
automatic transmission/ intelligent variable transmission shift indicator 4-52
dual clutch transmission shift indicator 4-53
engine coolant temperature gauge 4-50
fuel gauge 4-51
gauges 4-49
manual transmission shift indicator 4-53
odometer 4-51
outside temperature gauge 4-52
speedometer 4-49
tachometer 4-50
transmission shift indicator 4-52
intelligent variable transmission (IVT) 6-37
operation 6-37
shift lock system 6-41
interior features 4-130
air ventilation seat 4-132
ambient light 4-130
cargo area cover 4-139
clothes hanger 4-138
cup holder 4-130
floor mat anchor(s) 4-138
power outlet 4-132
side curtain 4-140
sliding armrest 4-131
sound mood lamp 4-130
sun visor 4-132
USB charger 4-134
wireless smart phone charging system 4-135
interior light 4-104
automatic turn off function 4-104
luggage room lamp 4-105
map lamp 4-104
room lamp 4-105

J

jump starting 7-6

K

key 4-6
door lock/unlock sound 4-15
immobilizer system 4-13
mechanical key 4-9, 4-12
remote key 4-7
smart key 4-10
key positions 6-6
ignition switch position 6-6
starting the engine 6-7
stopping the gasoline (petrol) engine/diesel engine (manual transmission) 6-10

L

LCD display 4-54
Information mode 4-56
LCD Display Control 4-54
LCD display modes 4-55
master warning mode 4-56
trip computer mode 4-56
Turn By Turn (TBT) mode 4-56
User settings mode 4-57
LCD display messages 4-65
LCD display modes 4-55
LCD displays
accumulated info display 4-63
digital speedometer 4-64
drive info display 4-64
driving info display 4-65
fuel economy 4-62
LCD display messages 4-65

service mode 4-64
trip information (trip computer) 4-62
light bulbs
bulb replacement precaution 8-71
lighting 4-94
auto light 4-96
battery saver function 4-94
daytime running light (DRL) 4-95
head light (low beam) 4-96
headlight leveling device 4-99
one-touch lane change 4-98
operating front fog light 4-98
operating high beam 4-97
operating turn signals 4-97
position and tail lamp 4-95
lights bulbs 8-71
headlamp bulb 8-76
replacing bulbs 8-76
luggage board 4-129
luggage net holder 4-129
luggage room lamp 4-105

M

maintenance services 8-8
owner maintenance precautions 8-9
owner's responsibility 8-8
manual climate control system 4-112
air conditioning 4-117
controlling air intake 4-115
controlling fan speed 4-116
heating and air conditioning manually 4-113
mode selection 4-114
temperature control 4-115
manual transmission 6-17
operation 6-17
manual transmission shift indicator 4-53
map lamp 4-104
master warning mode 4-56
mechanical key 4-9, 4-12
mirrors 4-43
adjusting the outside rearview mirrors 4-45
day/night rearview mirror 4-43
electric chromic mirror (ECM) with UVO service 4-44
folding the outside rearview mirror 4-46
inside rearview mirror 4-43
outside rearview mirror 4-44

O

odometer 4-51
one-touch lane change 4-98
opening the hood 4-31
operating high beam 4-97
outside rearview mirror 4-44
outside temperature gauge 4-52
owner maintenance 8-10

P

parking brake 6-46
passenger's seat belt 3-20
position and tail lamp 4-95
power brakes 6-43
power outlet 4-132
power window lock button 4-30
pre-tensioner seat belt 3-24
push-starting 7-8

R

rear seat adjustment 3-12
rear seat headrest 3-16
rear view monitor (RVM) 4-82
releasing the parking brake 6-46
resetting the sunroof 4-39
reverse parking distance warning (PDW) 4-85
non-operational conditions 4-86
operating condition 4-86

precautions 4-87
self-diagnosis 4-88
risk of burns when parking or stopping vehicle 1-6
rocking the vehicle 6-68
roof rack 4-140
room lamp 4-105

S

scheduled maintenance items 8-18
air cleaner filter 8-20
air conditioning refrigerant 8-23
automatic transmission fluid 8-20
brake discs, pads, calipers and rotors 8-22
brake fluid 8-22
brake hoses and lines 8-22
checking fluid levels 8-23
coolant 8-20
cooling system 8-20
drive belts 8-18
drive shafts and boots 8-22
dual clutch transmission fluid 8-21
engine oil and filter 8-18
exhaust pipe and muffler 8-22
fuel filter cartridge (for diesel) 8-19
fuel filter (for gasoline (petrol)) 8-18
fuel lines, fuel hoses and connections 8-19
intelligent variable transmission (IVT) fluid 8-21
manual transmission fluid 8-20
parking brake 8-22
spark plugs 8-20
steering gear box, linkage and boots/lower arm ball joint 8-22
suspension mounting bolts 8-22
vacuum crankcase ventilation hoses 8-20
vapor hose and fuel filler cap (for gasoline (petrol) engine) 8-19
scheduled maintenance service 8-12
maintenance under severe usage conditions 8-17
normal maintenance schedule 8-13
seat 3-3
feature of seat leather 3-6
front seat adjustment for manual seat 3-6
front seat adjustment for power seat 3-7
seat leather 3-6
seat belt 3-18
care of seat belt 3-29
passenger's seat belt 3-20
precautions 3-27
pre-tensioner seat belt 3-24
seat belts
driver's seat belt 3-19
seat leather 3-6
seatback pocket 3-12
service mode 4-64
side air bag 3-52
side curtain 4-140
sliding armrest 4-131
sliding the sunroof 4-37
smart key 4-10
battery replacement 4-6
precautions 4-12
smooth cornering 6-69
snow tires 6-72
snowy or icy conditions 6-71
sound mood lamp 4-130
special driving conditions 6-68
driving at night 6-69
driving in flooded areas 6-70
driving in the rain 6-69
driving on unpaved roads 6-70
hazardous driving conditions 6-68
highway driving 6-70
rocking the vehicle 6-68
smooth cornering 6-69
specifications 9-2

air conditioner compressor label 9-12
air conditioning system 9-3
bulb wattage 9-4
dimensions 9-2
engine 9-2
engine number 9-11
gross vehicle weight 9-3
lubricants and capacities 9-7
luggage volume 9-3
refrigerant label 9-12
tire specification and pressure label 9-11
tires and wheels 9-6
vehicle certification label 9-10
vehicle identification number (VIN) 9-10
speedometer 4-49
SRS care 3-60
starting the engine 6-13
diesel 6-16
gasoline (petrol) 6-15
starting the engine with smart key 6-14
steering wheel 4-40
electric power steering (EPS) 4-40
horn 4-42
tilt & telescopic steering wheel 4-41
storage compartment 4-127
center console storage 4-127
glove box 4-127
luggage board 4-129
luggage net holder 4-129
sunglass holder 4-128
summer tires 6-71
sun visor 4-132
sunglass holder 4-128
sunroof 4-36
automatic reversal 4-37
resetting the sunroof 4-39
sliding the sunroof 4-37
sunroof open warning 4-39
sunshade 4-39
tilting the sunroof 4-38
sunroof open warning 4-39
sunshade 4-39
surround view monitor (SVM) 4-84

T

tachometer 4-50
tailgate 4-23
theft-alarm system 4-16
armed stage 4-16
disarmed stage 4-17
theft-alarm stage 4-17
tilt & telescopic steering wheel 4-41
tilting the sunroof 4-38
tire chains 6-72
tire pressure indicator 7-11
tire pressure monitoring system (TPMS) 7-10
malfunction indicator 7-14
tire pressure indicator 7-11
tire replacement with TPMS 7-14
tires and wheels 8-43
all season tires 8-55
compact spare tire replacement 8-47
low aspect ratio tire 8-57
radial-ply tires 8-56
recommended cold tire inflation pressures 8-43
snow tires 8-55
summer tires 8-55
tire chains 8-56
tire maintenance 8-48
tire pressure 8-44
tire replacement 8-47
tire rotation 8-45
tire sidewall labeling 8-48
tire terminology and definitions 8-52
tire traction 8-48
wheel alignment and tire balance 8-46
wheel replacement 8-47
towing 7-24

emergency towing 7-26
removable towing hook 7-25
towing service 7-24
transmission shift indicator 4-52
trip computer mode 4-56
trip information (trip computer) 4-62
accumulated info display 4-63
digital speedometer 4-64
drive info display 4-64
fuel economy 4-62
Turn By Turn (TBT) mode 4-56
turn signals 4-97

U

USB charger 4-134
User settings mode 4-57

V

vehicld weight
overloading 6-77
vehicle break-in process 1-5
vehicle identification number (VIN) 9-10
vehicle modifications 1-5
vehicle stability management (VSM) 6-53
vehicle weight 6-76

W

Warning and indicator lights 4-69
warning and indicator lights
indicator lights 4-77
warning lights 4-69
warning lights 4-69
washer fluid 8-32
welcome system 4-106
headlight (headlamp) escort function 4-106
what to do in an emergency 7-3
if the engine will not start 7-5
if you have a flat tire (with spare tire) 7-16
in case of an emergency while driving 7-4
road warning 7-3
window opening and closing 4-27
windows 4-26
power window lock button 4-30
window opening and closing 4-27
windshield defrosting and defogging 4-125
winter driving 6-71
wiper blades 8-37
blade inspection 8-37
replacing front windshield wiper blade 8-38
replacing rear window wiper blade 8-39
wipers and washers 4-100
auto control 4-101
operating rear window wiper and washer switch 4-103
operating windshield washer 4-102
wireless smart phone charging system 4-135

Kia Warranty Policy W

Kia New Vehicle Warranty W-2
Replacement Parts Warranty W-3
Emission Warranty W-5
Kia Extended Warranty W-8
Free Service Coupons W-11
Maintenance Record Sheet W-13

KIA WARRANTY POLICY

Kia New Vehicle Warranty

Kia Motor India Limited hereinafter called "KMI", warrants that each new Kia vehicle sold shall be free from any defects in material and workmanship, under normal use and maintenance, subject to the following terms and conditions.

1. Warranty Period

This warranty shall exist for a period of 36 months from the date of delivery to the first purchaser irrespective of the mileage. However, warranty for Kia vehicle being used for commercial purpose such as Taxi/Tourist operation is 36 months/100,000 kilometres from the date of delivery whichever is earlier. This warranty is transferable to subsequent owner for the remaining warranty period. This warranty is applicable only in India and not transferable to any other country.

2. What is covered

Except as provided in paragraph 3 hereof, our Authorized Dealers shall either repair or replace, any Kia genuine part that is acknowledged by KMI to be defective in material or workmanship within the warranty period stipulated above, at no cost to the owner of the Kia vehicle for parts or labour. Such defective parts which have been replaced will become the property of KMI.

3. What is not covered

This warranty shall not apply to:

- Normal maintenance services, including without limitation, cleaning and polishing, minor adjustments, engine tuning, oil/fluid changes, filters replenishment, fastener retightening, wheel balancing, wheel alignment and tyre rotation etc.
- Replacement of parts as a result of normal wear and tear such as spark plugs, belts, brake pads and linings, clutch disc/facing, filters, wiper blades, bulbs, fuses, etc.

Damage or failure resulting from:

- Negligence of proper maintenance as required in this Owner's Manual and Service Booklet.
- Misuse, abuse, accident, theft, flooding or fire.
- Use of improper or insufficient fuel, fluids or lubricants.

- Use of parts other than Kia Genuine Parts.
- Any device and/or accessories not supplied by KMI.
- Modifications, alterations, tampering or improper repair.
- Parts used in applications of which they were not designed or not approved by KMI.
- Slight irregularities not recognised as affecting quality or function of the vehicle or parts, such as slight noise or vibrations, or items considered characteristic of the vehicle.
- Airborne "fallout", Industrial fallout, acid rain, hail and windstorms, or other Acts of God.
- Paint scratches, dents or similar paint or body damage.
- Action of road elements (sand, gravel, dust or road debris) which results in stone chipping of paint or glass.
- Incidental or consequential damages, including without limitation, loss of time, inconvenience, loss of use of vehicle or commercial loss.

✻ NOTICE

Audio, Video Navigation & Telematics System, Batteries, Tyres & Tubes and Audio Systems, originally equipped on Kia vehicles are warranted directly by the respective manufacturers and not by KMI.

- This warranty is the entire warranty given by KMI for Kia vehicles and no dealer or its or his agent or employee is authorized to extend or enlarge this warranty and no dealer or its or his agent or employee is authorized to make any oral warranty on KMI's behalf.
- KMI reserves the right to make any change in design or make any improvement on the vehicle at any time without any obligation to make the same change on vehicles previously sold.
- KMI reserves the right for the final decision in all warranty matters.

Owner's Responsibilities

- Proper use, maintenance and care of vehicle in accordance with the instructions contained in this Owner's Manual and Service Booklet. If the vehicle is subject to severe usage conditions, such as operation in extremely dusty, rough, more repeated short distance driving or heavy city traffic during hot weather, maintenance of vehicle should be done more frequently as mentioned in this Owner's Manual and Service Booklet.

- Retention of maintenance service records. It may be necessary for the customer to show that the required maintenance has been performed, as specified in this Owner's Manual and Service Booklet.
- Delivery of the vehicle during regular service business hours to any authorized Kia Dealer to obtain warranty service.
- In order to maintain the validity of this Basic Warranty, the vehicle must be serviced by Kia Authorized workshop in accordance to the Owner's Manual and Service Booklet.

Replacement Parts Warranty

Kia Motor India Limited hereinafter called "KMI", warrants that each new Kia Genuine replacement part purchased from and installed by Kia Authorized Dealer shall be free from any defects in material or workmanship, under normal use and maintenance, subject to the following terms and conditions.

1. Warranty period

This warranty shall exist for a period of 6 months or until the vehicle has been driven for a distance of 10,000 Kilometres from the date of installation of replacement part by Kia Authorized Dealer, whichever occurs first.

2. What is covered

Our Authorized Dealers shall either repair or replace, any Kia genuine par listed in paragraph 3 hereof, that is acknowledged by KMI to be defective in material or workmanship within the warranty period stipulated above, after examinations carried out to confirm that none of the original settings have been tampered with, at no cost to the owner of the Kia vehicle for parts or labour. Such defective parts which have been replaced will become the property of KMI.

3. What is not covered

This warranty shall not apply to:

- Normal maintenance services of parts such as cleaning, adjustment or replacement (i.e. spark plugs that are oil fouled, lead fouled, or which fail due to the use of low grade fuel).
- Parts that fail due to abuse, misuse, neglect, alteration or accident or which have been improperly lubricated or repaired.
- Parts used in applications for which they were not designed or approved by KMI.
- Failure due to normal wear of parts.
- Direct or indirect failures caused by misuse and improper maintenance of vehicle.
- Any vehicle on which the odometer reading has been altered so that mileage cannot be accurately determined.
- Incidental or consequential damages, including without limitation, loss of time, inconvenience, loss of use of vehicle or commercial loss.

This warranty is the entire warranty given by KMI for Kia replacement parts and no dealer or its or his agent or employee is authorized to extend or enlarge this warranty and no dealer or its or his agent or employee is authorized to make any oral warranty on KMI's behalf. KMI reserves the right for the final decision in all warranty matters.

Owner's Responsibility :

- Proper use, maintenance and care of the vehicle in accordance with the instructions contained in the Owner's Manual and Service Booklet.
- Retention of maintenance service records. It may be necessary for the customer to show that the required maintenance has been performed, as specified in this Owner's Manual and Service Booklet.
- Retention of the customer's copy of the original repair order and its invoice/bill against which the part was replaced.
- Delivery of the vehicle during regular service business hours to the same Kia Authorized Dealer who had sold and installed the replacement part.
- In order to maintain the validity of this Parts replacement Warranty, the vehicle must be serviced by Kia Authorized workshop in accordance to the Owner's Manual and Service Booklet.

Emission Warranty

KMI extends the Mass Emission standards (BSVI) for all its vehicle across all the states and union territories in India Such cities would be automatically covered subject to other terms of the warranty policy and the conditions and obligations laid down hereunder. Kia Motor India Limited hereinafter called "KMI", certifies that the components liable to affect the emission of the gaseous pollutants in the vehicle in normal use despite the use to which it may be subjected, comply with the provisions of Rule 115(2) of the Central Motor Vehicle Rules, 1989 hereinafter referred to as the "In-use emission standard", and further warrants that if on examination by a dealer duly authorized by KMI, the vehicle is discovered to be failing to meet the In-use emission standard as specified in the said rule, our Authorized Dealer shall take such corrective measures as may be necessary and shall at its sole discretion either repair or replace free of charge, such components of emission control system as are specified in paragraph 3 hereof.

1. Warranty period

This warranty will be in addition to and run parallel to the New Vehicle Warranty and shall exist for a period of 36 months from the date of delivery to the first purchaser, irrespective of the mileage. This warranty is transferable to subsequent owner for the remaining warranty period.

2. What is covered

Our Authorized Dealers shall either repair or replace, any Kia genuine part listed in paragraph 3 hereof, that is acknowledged by KMI to be defective in material or workmanship within the warranty period stipulated above, after examinations carried out to confirm that none of the original settings have been tampered with, at no cost to the owner of the Kia vehicle for parts or labour. Such defective parts which have been replaced will become the property of KMI.

3. Emission Warranty Parts List

1. Engine Control Module System
   - Engine Control Module
   - Crankshaft Position Sensor
   - Camshaft Position Sensor,
   - Throttle Position Sensor, MAP Sensor, O2 Sensor, IAT & ECT Sensor.
   - Vehicle Speed Signal
   - Brake Switch Signal
   - Mass Air Flow Sensor (MAFS)
2. Fuel Metering System
   - Fuel injectors
   - Fuel Pumps
   - Rail Pressure Sensor
3. Air Induction System
   - Air Cleaner Housing Assembly
   - Throttle Body
   - Intake Manifold
   - Accelerator Position Sensor
   - Boost Pressure Sensor
   - Knock Sensor
   - Turbocharger
   - Intercooler
4. Ignition System
   - H.T. Cable Set
   - Ignition Coil
   - Power Transistor
5. Evaporative Emission Control System
   - Vapour Storage Canister
   - Fuel Tank
   - Fuel Filler Tube and Fuel filler Cap
   - Fuel Tank Air Filter
   - Purge Control Solenoid Valve
   - Canister Close Valve
6. PCV System
   PCV Valve
   PCV Hoses
   Oil Filler Cap
7. Catalytic Converter System
   Exhaust Manifold
   - Exhaust Pipe Assembly
   - Catalytic Converter
8. Exhaust Gas Recirculation (EGR) System (Diesel Engines)
   - EGR Control System
9. Miscellaneous items used in above Systems
   - Vacuum hoses, clamps, fittings, tubing or mounting hardware used with the above systems. Valves, Switches and Solenoids

What is not covered

This warranty shall not apply to:

- Normal maintenance services including without limitation, engine tuning, oil/fluid changes, filters replenishment, etc.
- Replacement of parts as a result of normal wear and tear such as spark plugs, filters, etc.
- The vehicle reported without valid 'Pollution Under Control' certificate for the period immediately preceding the test during which the failure is discovered.
- The vehicle which has been run on adulterated fuel or lubricant or fuel/lubricants other than those specified by KMI.

Damage or failure resulting from:

- Negligence of proper maintenance as required in this Owner's Manual and Service Booklet.
- Misuse, abuse, accident, theft, flooding or fire.
- Use of improper or insufficient fuel, fluids or lubricants.

- Any repair carried out other than by Kia Authorized Dealer/ Service Centre. Use of parts other than Kia Genuine Parts.
- Any device and/or accessories not supplied by KMI.
- Modifications, alterations, tampering or improper repair. not supplied by KMI.
- Parts used in applications for which they were not designed or not approved by KMI.
- Any penalties that may be charged by statutory authorities on account of failure to comply with the In-use emission standards.
- The vehicle in which the odometer has been tampered with, changed or been disconnected.
- Any consequential repairs or replacement of parts which maybe found necessary to establish compliance to In-use emission standards, in addition to the replacement of the components covered under Emission Warranty, will not be made free of cost unless such parts are also found to be in warrantable condition within the scope and limit of the New Vehicle Warranty.
- Incidental or consequential damages, including without limitation, loss of time, inconvenience, loss of use of vehicle or commercial loss.

This warranty is the entire warranty given by KMI for Kia vehicles and no dealer or its or his agent or employee is authorized to extend or enlarge this warranty and no dealer or its or his agent or employee is authorized to make any oral warranty on KMI's behalf.

KMI reserves the right to make any change in design or make any improvement on the vehicle at any time without any obligation to make the same change on vehicles previously sold.

Owner's Responsibility:

- Proper use, maintenance and care of the vehicle in accordance with the instructions contained in the Owner's Manual and Service Booklet. If the vehicle is subject to severe usage conditions, such as operation in extremely dusty, rough, more repeated short distance driving or heavy city traffic during hot weather, maintenance of vehicle should be done more frequently as mentioned in this Owner's Manual and Service Booklet.
- In order to maintain the validity of this Emission Warranty, the vehicle must be serviced by Kia Authorized Dealer or Service Centre in accordance to the Owner's Manual and Service Booklet.

- Retention of maintenance service records. It may be necessary for the customer to show that the required maintenance has been performed, as specified in this Owner's Manual and Service Booklet.
- Immediate Delivery of the vehicle to any authorized Kia Dealer upon discovery of failure to comply with the In-use emission standard inspite of proper use, maintenance and care of vehicle in accordance with the instructions contained in this Owner's Manual and Service Booklet.
- Production of "Pollution Under Control" (PUC) certificate valid for the period immediately preceding the test during which the failure is discovered, the test having been carried out either for obtaining a new certificate, or pursuant upon being directed by an officer as referred to in sub-rule (2) of Rule116 of the Central Motor Vehicles Rules.

NOTICE

KIA Extended Warranty*

KMI offers optional paid extended warranty on selected models, in addition to the basic new vehicle warranty. For more details on Kia Extended Warranty please call the nearest dealer or our toll free number 1800-108-5000.

* Conditions apply

1st FREE SERVICE COUPON

(800-1,000km or within 1 month of delivery, whichever is earlier)

Customer Copy

Model Name _____

Customer's Name _____

VIN _____

Registration No. _____

Mileage _____

Delivery Date _____

Service Date _____

RO Number _____

Dealer code _____

Promise to Care

Servicing Dealer's Stamp

Service Mgr's Signature _____

2nd FREE SERVICE COUPON

(4,500-5,000km or within 6 months of delivery, whichever is earlier)

Customer Copy

Model Name _____

Customer's Name _____

VIN _____

Registration No. _____

Mileage _____

Delivery Date _____

Service Date _____

RO Number _____

Dealer code _____

Promise to Care

Servicing Dealer's Stamp

Service Mgr's Signature _____

3rd FREE SERVICE COUPON

(9,000-10,000km or within 12 months of delivery, whichever is earlier)

Customer Copy

Model Name _____

Customer's Name _____

VIN _____

Registration No. _____

Mileage _____

Delivery Date _____

Service Date _____

RO Number _____

Dealer code _____

Promise to Care

Servicing Dealer's Stamp

Service Mgr's Signature _____

Free Service Coupons are valid at all Kia authorized dealerships and workshops across India.

SAMPLE

Checklist for Free Service 1,000 KM - 10,000 KM				
Number of months or driving distance, whichever comes first				
Months		1	6	12
Km X 1,000		1	5	10
Engine oil and engine oil filter*	Petrol, Diesel	I	I	R
Coolant (Engine)	Petrol, Diesel	I	I	I
Vacuum hoses and crankcase ventilation hoses	Petrol	-	I	-
Drive shaft and boots	Petrol, Diesel	I	I	I
Fuel lines, hoses and connections	Petrol, Diesel	I	I	I
Intercooler, in/out hose, air intake hose	Kappa 1.4 T-GDI	-	I	I
Canister	Gamma II 1.5 MPI	-	-	I
Fuel filler cap	Petrol, Diesel	-	-	I
Air cleaner filter*	Petrol, Diesel	-	I	R
Exhaust system (leakages & damages)	Petrol, Diesel	I	I	I
Cooling system (water pump, hoses) & leakages	Petrol, Diesel	I	I	I
Air conditioner compressor/refrigerant (if equipped)	Petrol, Diesel	-	-	I
Climate control air filter (if equipped)*	Petrol, Diesel	-	I	C
Brake discs and pads	Petrol, Diesel	-	I	I
Brake lines, hoses and connections	Petrol, Diesel	I	I	I
Brake/clutch fluid	Petrol, Diesel	I	I	I
Parking brake	Petrol, Diesel	I	I	I
Steering gear rack, linkage and boots	Petrol, Diesel	I	I	I
Suspension ball joints	Petrol, Diesel	I	I	I
Tire (pressure & tread wear)	Petrol, Diesel	I	I	I
Battery condition	Petrol, Diesel	I	I	-
Throttle body	Petrol	-	-	I
Wiper Blade & washer fluid	Petrol, Diesel	I	I	I
Front and rear wheel bearings & bushes	Petrol, Diesel	Inspect if required		
Parking brake (disc/drum, shoe & operation)	Petrol, Diesel	I	I	I
Wheel alignment & balancing#	Petrol, Diesel	-	-	I
Bolt and nuts on chasis and body	Petrol, Diesel	I	I	I
Lubricate locks & hinges	Petrol, Diesel	I	I	I
Check all electrical systems & alternator	Petrol, Diesel	I	I	I
Warning lights operation & KDS system check	Petrol, Diesel	I	I	I
Ext & int. lights, horn & gauges	Petrol, Diesel	I	I	I
Power window / Sunroof operation (if equipped)	Petrol, Diesel	I	I	I
All seat belt operation	Petrol, Diesel	I	I	I
Road test	Petrol, Diesel	Inspect if required		

I: Inspect and if necessary, adjust, correct, clean or replace R: Replace or change C: Clean

Notice

* All consumables on chargeable basis

On chargeable basis

MAINTENANCE RECORD SHEET

Repair category - Free Ser./Paid Serv./Running Repair/AC Repair

Repair Date	RO No.	Kms	Repair Category	Details of Repair done	Name of Servicing dealer	Ser. Adv. Sign.	Tech. sign.

MAINTENANCE RECORD SHEET

Repair category - Free Ser./Paid Serv./Running Repair/AC Repair

Repair Date	RO No.	Kms	Repair Category	Details of Repair done	Name of Servicing dealer	Ser. Adv. Sign.	Tech. sign.

KIA ROAD-SIDE ASSITANCE PROGRAM

Kia Roadside Assistance is a 24 X 7 emergency support provided in any event of breakdown or road accident of your Kia vehicle

Program benefits

Events	Key Benefits
Breakdown/Accident	Onsite Repair/ Vehicle recovery in case of breakdown / Road accident
Flat tire	Replacement of Flat tire with the spare tire available in the vehicle/ Tire puncture repair assist from nearby repairer
Dead battery	Jump Start
Key related	In-vehicle locked keys retrieval / Lost keys & broken key assist*
Fuel related	Fuel delivery in case of "Out of fuel" / Incorrect fuel & Contaminated Fuel Assist (Once a year upto 5 liter then it will be chargeable)
Taxi arrangement (for breakdown & accident)	Taxi arrangement for up to 100 KM from breakdown location

*Duplicate key retrieval within city limits. If key is outside city limits vehicle will be towed to nearest Kia authorized dealership

How to request assistance

In the event of a breakdown or accident, simply call Kia Care Roadside Assistance on the toll free number 1800 108 5000. This number can also be found on the above shown sticker, which is pasted on the vehicle. Then follow the below steps to get assistance:

1. Identify your vehicle with the VIN (Chassis Number), that is available on registration certificate (or smart card) or insurance document. You can also find the VIN on the vehicle (for details please refer page 9-10 under "Specifications & Consumer Information" chapter.
2. Explain the location of your vehicle (along with nearby landmark)
3. Explain the problem you are facing with the vehicle
4. Our customer care will advise you on further course of action

Note:

- For your safety, park the vehicle on the edge of the road and turn on the warning lights
- In case you are on a highway, place the caution sign (warning triangle) provided with your vehicle approximately 3 meters (9 feet) from the vehicle facing towards the on-coming traffic

Terms and conditions:

1. The service is applicable for the basic warranty period of the vehicle.
2. The 24 X 7 Road side assistance is available up to a nearest Kia authorized dealer workshop.
3. The vehicle recovery and/or taxi arrangement service is applicable for a condition in which the vehicle has been immobilized.
4. Towing of vehicle subject to vehicle being parked in a location where towing vehicle can tow and all tires being rolling and in straight position, else the side glass may be broken to tow the vehicle, where the cost of repairing the glass will be borne by customer.
5. Cost of parts replacement is not included, unless covered under Kia Warranty.
6. Cost of repairs made to your vehicle is not included, unless it is covered under Kia Warranty.
7. Assistance to be provided as long as Vehicle has broken down on a motorable gazetted, concrete or bitumen road, If vehicle goes off-road or fallen in pit/ditch/valley, cost of special equipment for retrieving vehicle from pit/ditch/valley will be covered but any consequential damage would be customer's liability. Any approvals for towing, in such cases, from local authorities has to be obtained by customer.
8. Vehicle will not be towed in case of involvement of police.