Kia, THE COMPANY

Thank you for becoming the owner of a new Kia vehicle.

As a global car manufacturer focused on building high-quality vehicles with exceptional value, Kia Motors is dedicated to providing you with a customer service experience that exceeds your expectations.

All information contained in this Owner's Manual was accurate at the time of publication. However, Kia reserves the right to make changes at any time so that our policy of continual product improvement can be carried out.

This manual applies to all trims of this vehicle and includes images, descriptions, and explanations of optional as well as standard equipment. As a result, some material in this manual may not be applicable to your specific Kia vehicle. Some images are shown for illustration only and may show features that differ from those on your vehicle.

Drive safely and enjoy your Kia!

Thank you for choosing a Kia vehicle.

When you require service, remember that your Kia dealer knows your vehicle best. Your dealer has factory-trained technicians, recommended special tools and genuine Kia replacement parts. It is dedicated to your complete customer satisfaction.

Because subsequent owners require this important information as well, this publication should remain with the vehicle if it is sold.

This manual will familiarize you with operational, maintenance and safety information about your new vehicle. It is supplemented by a Warranty and Consumer Information manual that provides important information on all warranties regarding your vehicle.

We urge you to read these publications carefully and follow the recommendations to help assure enjoyable and safe operation of your new vehicle.

Kia offers a great variety of options, components and features for its various models. Therefore, some of the equipment described in this manual, along with the various illustrations, may not be applicable to your particular vehicle.

The information and specifications provided in this manual were accurate at the time of printing. Kia reserves the right to discontinue or change specifications or design at any time without notice and without incurring any obligation. If you have questions, always check with your Kia dealer.

We assure you of our continuing interest in your motoring pleasure and satisfaction in your Kia vehicle.

© 2018 Kia Canada Inc.

All rights reserved. Reproduction by any means, electronic or mechanical, including photocopying, recording, or by any information storage and retrieval system or translation in whole or part is not permitted without written authorization from Kia Canada Inc..

Printed in Mexico

TABLE OF CONTENTS

Introduction	1
Your vehicle at a glance	2
Safety features of your vehicle	3
Features of your vehicle	4
Audio system	5
Driving your vehicle	6
What to do in an emergency	7
Maintenance	8
Specifications & Consumer information	9
Index	I

Introduction

1

How to use this manual 1-2
Fuel requirements 1-3
• Gasoline containing alcohol and methanol. 1-3
• Do not use methanol 1-5
• Fuel Additives 1-5
Vehicle break-in process 1-6
Vehicle data collection and event data recorders. . 1-7

HOW TO USE THIS MANUAL

We want to help you get the greatest possible driving pleasure from your vehicle. Your Owner's Manual can assist you in many ways. We strongly recommend that you read the entire manual. In order to minimize the chance of death or injury, you must read the WARNING and CAUTION sections in the manual.

Illustrations complement the words in this manual to best explain how to enjoy your vehicle. By reading your manual, you will learn about features, important safety information, and driving tips under various road conditions.

The general layout of the manual is provided in the Table of Contents. Use the index when looking for a specific area or subject; it has an alphabetical listing of all located in the back of this manual.

Sections: This manual has nine sections plus an index. Each section begins with a brief list of contents so you can tell at a glance if that section has the information you want.

You will find various types of safety instructions in this manual. These instructions were prepared to enhance your personal safety.

Carefully read and follow ALL procedures and recommendations provided in these instructions.

⚠ WARNING

A WARNING indicates a situation in which harm, serious bodily injury or death could result if the warning is ignored.

⚠ CAUTION

A CAUTION indicates a situation in which damage to your vehicle could result if the caution is ignored.

✻ NOTICE

A NOTICE indicates interesting or helpful information is being provided.

FUEL REQUIREMENTS

Your new vehicle is designed to use only unleaded fuel having a pump octane number ((R+M)/2) of 87 (Research Octane Number 91) or higher. (Do not use methanol blended fuels.)

Your new vehicle is designed to obtain maximum performance with UNLEADED FUEL, as well as minimize exhaust emissions and spark plug fouling.

Never add any fuel system cleaning agents to the fuel tank other than what has been specified. (Consult an authorized Kia dealer for details.)

- Tighten the cap until it clicks one time, otherwise the Check Engine light will illuminate.

⚠ WARNING - Refueling

- **Do not "top off" after the nozzle automatically shuts off. Attempts to force more fuel into the tank can cause fuel overflow onto you and the ground causing a risk of fire.**
- **Always check that the fuel cap is installed securely to prevent fuel spillage, especially in the event of an accident.**

Gasoline containing alcohol and methanol

Gasohol, a mixture of gasoline and ethanol (also known as grain alcohol), and gasoline or gasohol containing methanol (also known as wood alcohol) are being marketed along with or instead of leaded or unleaded gasoline.

Pursuant to EPA regulations, ethanol may be used in your vehicle.

Do not use gasohol containing more than 15% ethanol, and do not use gasoline or gasohol containing any methanol. Ethanol provides less energy than gasoline and it attracts water, and it is thus likely to reduce your fuel efficiency and could lower your MPG results.

Methanol may cause drivability problems and damage to the fuel system, engine control system and emission control system.

Discontinue using gasohol of any kind if drivability problems occur.

Vehicle damage or drivability problems may not be covered by the manufacturer's warranty if they result from the use of:

1. Gasoline or gasohol containing methanol.
2. Leaded fuel or leaded gasohol.
3. Gasohol containing more than 15 percent ethanol

"E85" fuel is an alternative fuel comprised of 85 percent ethanol and 15 percent gasoline, and is manufactured exclusively for use in Flexible Fuel Vehicles. “E85” is not compatible with your vehicle. Use of “E85” may result in poor engine performance and damage to your vehicle's engine and fuel system. Kia recommends that customers do not use fuel with an ethanol content exceeding 15 percent.

✻ NOTICE

Your New Vehicle Limited Warranty does not cover damage to the fuel system or any performance problems caused by the use of “E85” fuel.

✻ NOTICE

Never use any fuel containing methanol. Discontinue use of any methanol containing product which may inhibit proper drivability.

Other fuels

Using fuels that contain Silicone (Si), MMT (Manganese, Mn), Ferrocene (Fe), and Other metalic additives, may cause vehicle and engine damage or cause misfiring, poor acceleration, engine stalling, catalyst melting, clogging, abnormal corrosion, life cycle reduction, etc.

Also, the Malfunction Indicator Lamp (MIL) may illuminate.

✻ NOTICE

Damage to the fuel system or performance problem caused by the use of these fuels may not be covered by your New Vehicle Limited Warranty.

Use of MTBE

Kia recommends avoiding fuels containing MTBE (Methyl Tertiary Butyl Ether) over 15.0% vol. (Oxygen Content 2.7% weight) in your vehicle.

Fuel containing MTBE over 15.0% vol. (Oxygen Content 2.7% weight) may reduce vehicle performance and produce vapor lock or hard starting.

✻ NOTICE

Your New Vehicle Limited Warranty may not cover damage to the fuel system and any performance problems that are caused by the use of fuels containing methanol or fuels containing MTBE (Methyl Tertiary Butyl Ether) over 15.0% vol. (Oxygen Content 2.7% weight.)

Gasoline containing MMT

Some gasoline contains harmful manganese-based fuel additives Such as MMT(Methylcyclopentadienyl Manganese Tricarbonyl). Kia does not recommend the use of gasoline containing MMT. This type of fuel can reduce vehicle performance and affect your emission control system. The Malfunction Indicator Lamp on the cluster may come on.

Do not use methanol

Fuels containing methanol (wood alcohol) should not be used in your vehicle. This type of fuel can reduce vehicle performance and damage components of the fuel system, engine control system and emission control system.

Fuel Additives

Kia recommends that you use good quality gasolines treated with detergent additives such as TOP TIER Detergent Gasoline, which help prevent deposit formation in the engine. These gasolines will help the engine run cleaner and enhance performance of the Emission Control System. For more information on TOP TIER Detergent Gasoline, please go to the website (www.toptiergas.com)

For customers who do not use TOP TIER Detergent Gasoline regularly, and have problems starting or the engine does not run smoothly, additives that you can buy separately may be added to the gasoline.

If TOP TIER Detergent Gasoline is not available, one bottle of additive should be added to the fuel tank at every 12,000 km (7,500 miles) or every engine oil change is recommended. Additives are available from your authorized Kia dealer along with information on how to use them. Do not mix other additives.

Operation in foreign countries

If you are going to drive your vehicle in another country, be sure to:

- Observe all regulations regarding registration and insurance.
- Determine that acceptable fuel is available.

VEHICLE BREAK-IN PROCESS

No special break-in period is needed. By following a few simple precautions for the first 1,000 km (600 miles) you may add to the performance, economy and life of your vehicle.

- Do not race the engine.
- While driving, keep your engine speed (rpm, or revolutions per minute) between 2,000 rpm and 4,000 rpm.
- Do not maintain a single speed for long periods of time, either fast or slow. Varying engine speed is needed to properly break-in the engine.
- Avoid hard stops, except in emergencies, to allow the brakes to seat properly.
- Don't tow a trailer during the first 2,000 km (1,200 miles) of operation.

VEHICLE DATA COLLECTION AND EVENT DATA RECORDERS

This vehicle is equipped with an event data recorder (EDR). The main purpose of an EDR is to record, in certain crash or near crash-like situations, such as an air bag deployment or hitting a road obstacle, data that will assist in understanding how a vehicle's systems performed. The EDR is designed to record data related to vehicle dynamics and safety systems for a short period of time, typically 30 seconds or less. The EDR in this vehicle is designed to record such data as:

- **How various systems in your vehicle were operating;**
- **Whether or not the driver and passenger safety belts were buckled/ fastened;**
- **How far (if at all) the driver was depressing the accelerator and/or brake pedal; and,**
- **How fast the vehicle was traveling.**

These data can help provide a better understanding of the circumstances in which crashes and injuries occur. NOTE: EDR data are recorded by your vehicle only if a non-trivial crash situation occurs; no data are recorded by the EDR under normal driving conditions and no personal data (e.g., name, gender, age, and crash location) are recorded. However, other parties, such as law enforcement, could combine the EDR data with the type of personally identifying data routinely acquired during a crash investigation.

To read data recorded by an EDR, special equipment is required, and access to the vehicle or the EDR is needed. In addition to the vehicle manufacturer, other parties, such as law enforcement, that have the special equipment, can read the information if they have access to the vehicle or the EDR.

Your vehicle at a glance

Exterior overview 2-2
Interior overview 2-5
Instrument panel overview 2-6
Engine compartment 2-7

EXTERIOR OVERVIEW

■ Front view

1. Hood 4-39
2. Head lamp (Features of your vehicle) ...4-93
   Head lamp (Maintenance) 8-72
3. Front fog lamp
   (Features of your vehicle).....4-97
   Front fog lamp or DRL lamp
   (Maintenance) 8-72
4. Wheel and tire 8-40, 9-5
5. Outside rearview mirror 4-54
6. Sunroof 4-45
7. Front windshield wiper blades
   (Features of your vehicle).....4-98
   Front windshield wiper blades
   (Maintenance) 8-34
8. Windows 4-33
9. Forward Collision-avoidance Assist (FCA)
   system 6-39

❊ The actual shape may differ from the illustration.

OSC017005N

■ Rear view (4 DOOR)

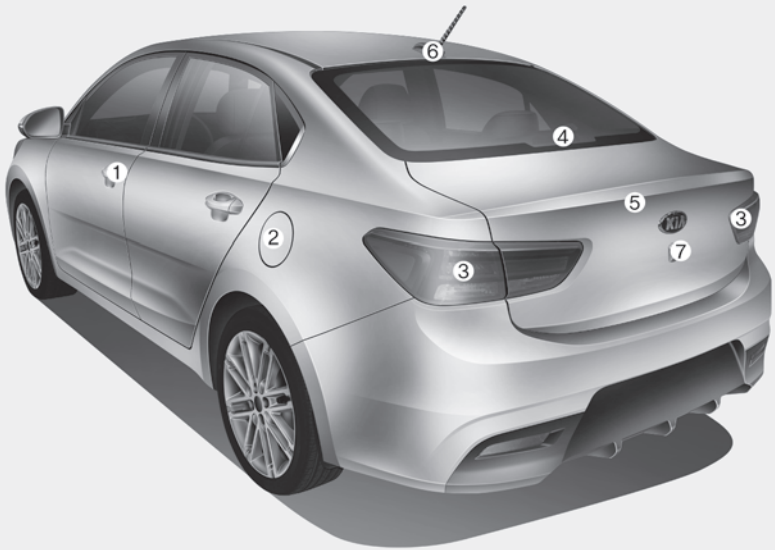

1. Door locks 4-19
2. Fuel filler lid 4-42
3. Rear combination lamp (Maintenance) 8-74
4. High mounted stop lamp (Maintenance) 8-74
5. Trunk.....4-24
6. Antenna 5-2
7. Rear view monitor 4-91

❊ The actual shape may differ from the illustration.

OSC017006N

■ Rear view (5 DOOR)

1. Door locks 4-19
2. Fuel filler lid 4-42
3. Rear combination lamp (Maintenance) 8-73
4. High mounted stop lamp (Maintenance) 8-73
5. Tailgate 4-30
6. Antenna 5-2
7. Rear view monitor 4-91
8. Rear window wiper blade (Features of your vehicle).....4-102
   Rear window wiper blade (Maintenance)...8-35

❊ The actual shape may differ from the illustration.

OSC017002N

INTERIOR OVERVIEW

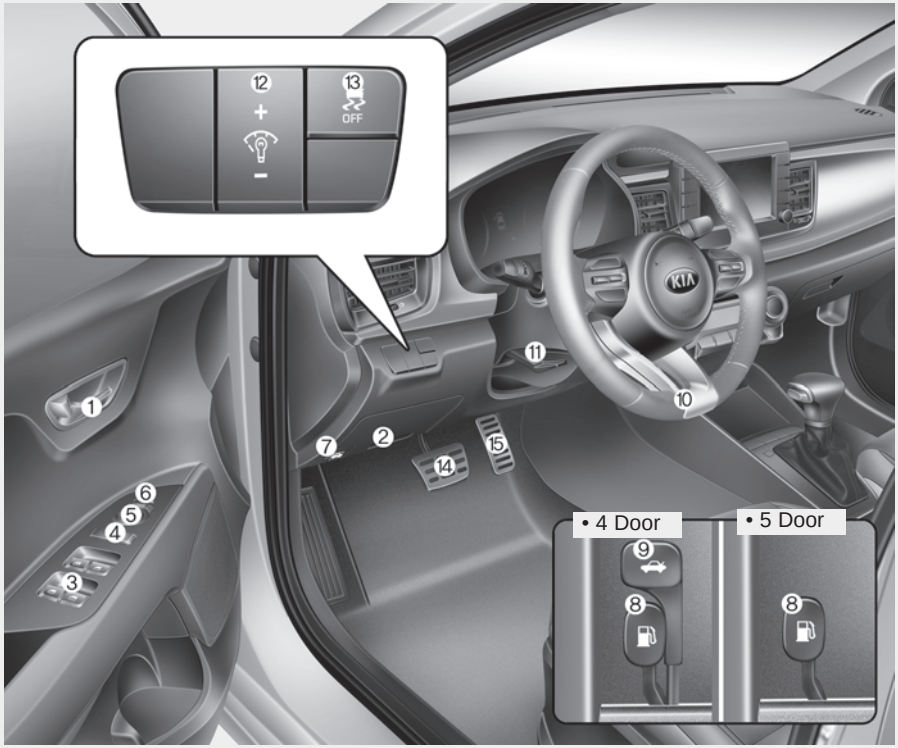

1. Inside door handle 4-20
2. Inner fuse panel 8-57
3. Power window switches 4-34
4. Power window lock button 4-37
5. Outside rearview mirror control switch 4-55
6. Outside rearview mirror folding switch 4-56
7. Hood release lever 4-39
8. Fuel filler lid release lever 4-42
9. Trunk open lever 4-24
10. Steering wheel 4-51
11. Steering wheel tilt control 4-52
12. Instrument panel illumination control switch 4-57
13. ESC OFF button 6-30
14. Brake pedal 6-24
15. Accelerator pedal

OSC017003N

INSTRUMENT PANEL OVERVIEW

1. Instrument cluster.....4-57
2. Horn 4-52
3. Driver's front air bag.....3-48
4. Light control/Turn signals 4-92
5. Wiper/Washer.....4-98
6. Ignition switch.....6-6
   ENGINE START/STOP button 6-8
7. Hazard warning flasher switch 7-2
8. Audio 5-8
9. Central door lock switch 4-21
10. Climate control system 4-109, 4-119
11. AUX, USB port 5-3
12. Manual Transmission.....6-15
    Automatic Transmission.....6-18
13. Parking brake lever 6-26
14. Passenger's front air bag 3-48
15. Power outlet 4-138
16. Glove box 4-133
17. Steering wheel audio control.....5-11
18. Seat warmer.....4-137
19. Heated steering wheel switch 4-53
20. Sport mode system.....6-55
21. USB charger.....4-139
22. Center console storage.....4-133
23. Cruise control button.....6-50

OSC018004N

ENGINE COMPARTMENT

■ **Gamma 1.6L GDI Engine (Gasoline)**

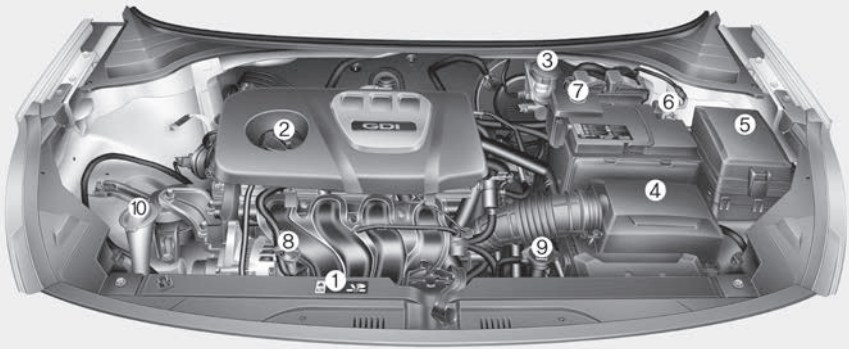

1. Engine coolant reservoir.....8-24
2. Engine oil filler cap 8-21
3. Brake / clutch fluid reservoir 8-26
4. Air cleaner.....8-29
5. Fuse box 8-59
6. Negative battery terminal.....8-37
7. Positive battery terminal 8-37
8. Engine oil dipstick.....8-21
9. Radiator cap 8-23
10.Windshield washer fluid reservoir....8-27

❊ The actual engine compartment in the vehicle may differ from the illustration.

OSC077013N

Safety features of your vehicle

Seat. 3-2
- Driver's seat 3-2
- Front passenger's seat. 3-2
- Rear seat. 3-2
- Front seat adjustment 3-5
- Headrest (for front seat) 3-6
- Seatback pocket. 3-9
- Rear seat adjustment 3-9

Seat belts 3-14
- Seat belt restraint system 3-14
- Pre-tensioner seat belt. 3-20
- Seat belt precautions 3-22
- Care of seat belts 3-24

Child Restraint System (CRS). 3-26
- Using a child restraint system 3-27

Air bag - advanced supplemental restraint system. 3-33
- How does the air bag system operate 3-34
- Air bag warning light 3-37
- SRS components and functions 3-37
- Occupant detection system. 3-40
- Driver's and passenger's front air bag 3-48
- Side air bag 3-51
- Curtain air bag 3-53
- Inflation and non-inflation conditions of the air bag. 3-55
- SRS Care 3-60
- Adding equipment to or modifying your air bag-equipped vehicle. 3-61
- Air bag warning label 3-61

SEAT

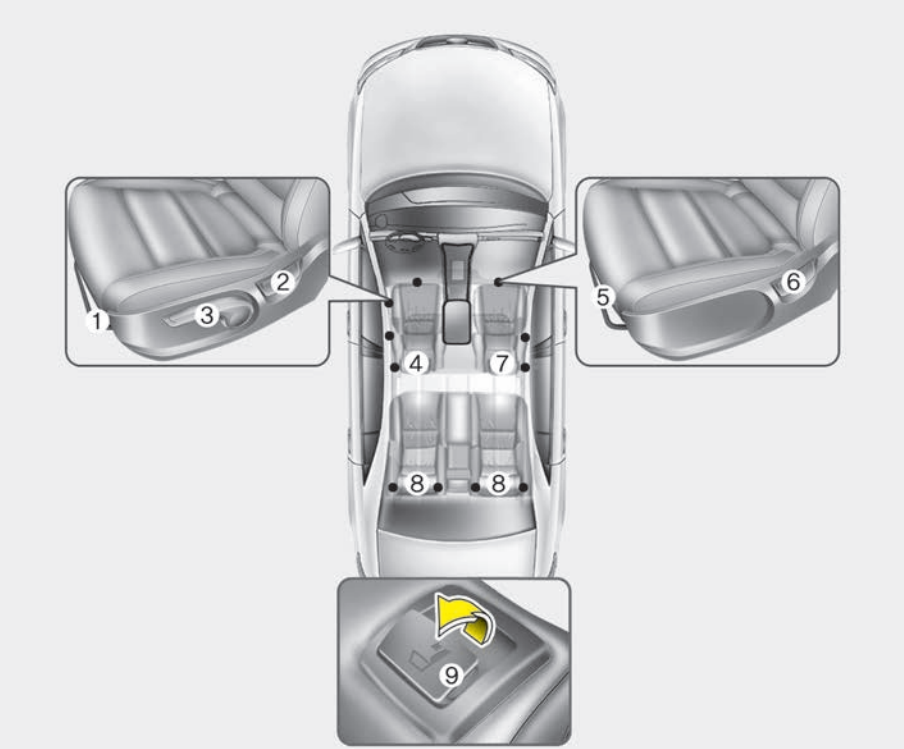

❊ The actual seats in the vehicle may differ from the illustration.

OSC037001N

Driver's seat

(1) Forward and backward
(2) Seatback angle
(3) Seat cushion height*
(4) Headrest

Front passenger's seat

(5) Forward and backward
(6) Seatback angle
(7) Headrest

Rear seat

(8) Headrest
(9) Seatback folding*

* : if equipped

⚠ WARNING - Loose objects

Do not place anything in the driver's foot well or under the front seats. Loose objects in the driver's foot area could interfere with the operation of the foot pedals.

⚠ WARNING - Uprighting seat

Do not press the release lever on a manual seatback without holding and controlling the seatback. The seatback will spring upright possibly impacting you or other passengers.

⚠ WARNING - Seat cushion

Occupants should never sit on aftermarket seat cushions or sitting cushions. The passenger's hips may slide under the lap portion of the seat belt during an accident or a sudden stop.

⚠ WARNING - Driver responsibility for passengers

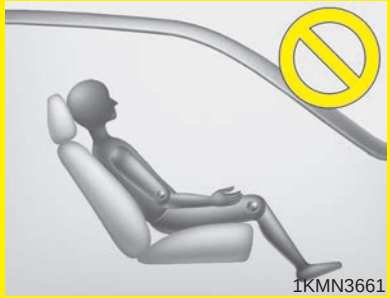

The driver must advise the passenger to keep the seatback in an upright position whenever the vehicle is in motion. If a seat is reclined during an accident, the restraint system's ability to restrain will be greatly reduced.

⚠ WARNING - Driver's seat

- **Never attempt to adjust the seat while the vehicle is moving. This could result in loss of control of your vehicle.**
- **Do not allow anything to interfere with the normal position of the seatback and seatback adjustment.**
- **Sit as far back as possible from the steering wheel while still maintaining comfortable control of your vehicle. A distance of at least 25 cm (10 in) from your chest to the steering wheel is recommended. Failure to do so could result in air bag inflation injuries to the driver.**

⚠ WARNING - Seat adjustment

- **Do not adjust the seat while wearing seat belts. Moving the seat forward will cause strong pressure on the abdomen.**
- **Do not place your hand near the seat bottom or seat track while adjusting the seat. Your hand could get caught in the seat mechanism.**

⚠ WARNING - Small Objects

Use extreme caution when picking small objects trapped under the seats or between the seat and the center console. Your hands might be cut or injured by the sharp edges of the seats mechanism.

Feature of Seat Leather

- Leather is made from the outer skin of an animal, which goes through a special process to be available for use. Since it is a natural substance, each part differs in thickness or density.

  Wrinkles may appear as a natural result of stretching and shrinking depending on the temperature and humidity.
- The seat is made of stretchable fabric to improve comfort.
- The parts contacting the body are curved and the side supporting area is high which provides driving comfort and stability.
- Wrinkles may appear naturally from usage. It is not a fault of the product.

⚠ CAUTION

- ***Belts with metallic accessories, zippers or keys inside your back pants pocket may damage the seat fabric.***
- ***Make sure not to wet the seat. It may change the nature of natural leather.***
- ***Jeans or clothes which contain bleach may contaminate the surface of the seat covering fabric and cause damage or discoloration.***

✻ NOTICE

Wrinkles or abrasions which appear naturally from usage are not covered by warranty.

Front seat adjustment

Forward and backward

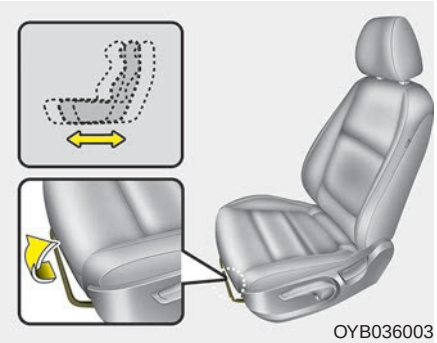

To move the seat forward or backward:

1. Pull the seat slide adjustment lever up and hold it.
2. Slide the seat to the position you desire.
3. Release the lever and make sure the seat is locked in place.

Adjust the seat before driving, and make sure the seat is locked securely by trying to move forward and backward without using the lever. If the seat moves, it is not locked properly.

⚠ WARNING - Unexpected seat movement

After adjusting a manual seat, always check that it is locked by shifting your weight to the front and back. Sudden or unexpected movement of the driver's seat could cause you to lose control of the vehicle.

Seatback angle

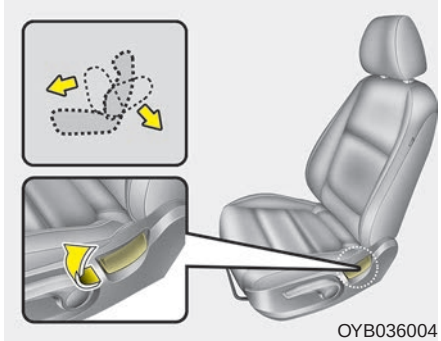

To recline the seatback:

1. Lean forward slightly and lift up the seatback recline lever.
2. Carefully lean back on the seat and adjust the seatback of the seat to the position you desire.
3. Release the lever and make sure the seatback is locked in place. (The lever MUST return to its original position for the seatback to lock.)

Seat Cushion height (if equipped, for driver's seat)

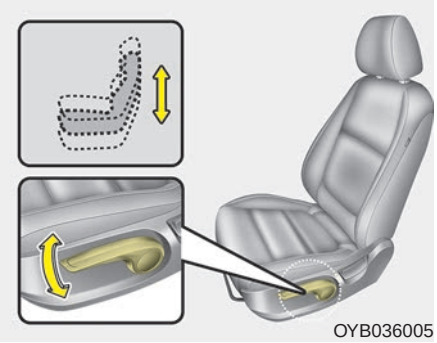

To change the height of the seat cushion push the lever upwards or downwards.

- To lower the seat cushion, push the lever down several times.
- To raise the seat cushion, push the lever up several times.

Headrest (for front seat)

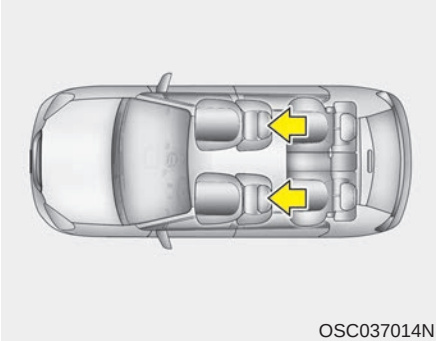

The driver's and front passenger's seats are equipped with a headrest for the occupant's safety and comfort.

The headrest not only provides comfort for the driver and front passenger, but also helps protect the head and neck in the event of a collision.

For maximum effectiveness in case of an accident, the headrest should be adjusted so the middle of the headrest is at the same height of the center of gravity of an occupant's head. Generally, the center of gravity of most people's head is similar with the height of the top of their eyes. Also, adjust the headrest as close to your head as possible.

For this reason, the use of a cushion that holds the body away from the seatback is not recommended.

⚠ WARNING - Headrest removal/adjustment

- **Do not operate the vehicle with the headrests removed. Headrests can provide critical neck and head support in a crash.**
- **Do not adjust the headrest height while the vehicle is in motion. Driver may lose control of the vehicle.**

Adjusting the height up and down

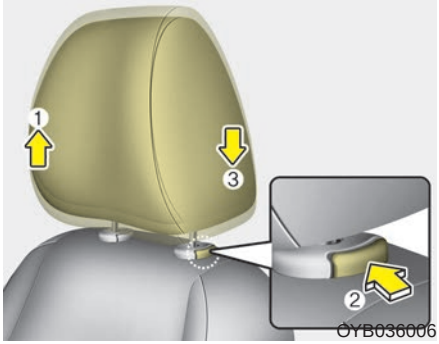

To raise the headrest, pull it up to the desired position (1). To lower the headrest, push and hold the release button (2) on the headrest support and lower the headrest to the desired position (3).

⚠ CAUTION

Excessive pulling or pushing may damage the headrest.

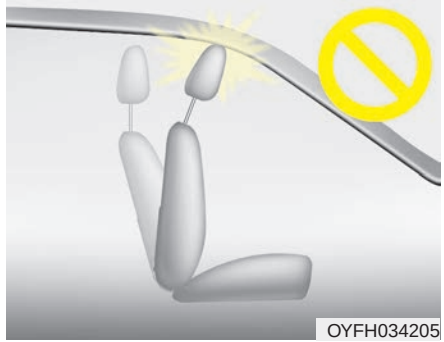

✻ NOTICE

If you recline the seatback towards the front with the headrest and seat cushion raised, the headrest may come in contact with the sunvisor or other parts of the vehicle.

Removal and installation

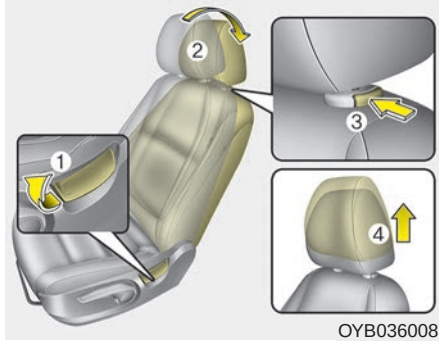

To remove the headrest:

1. Recline the seatback (2) with the recline lever(1).
2. Raise headrest as far as it can go.

3. Press the headrest release button (3) while pulling the headrest up (4).

⚠ WARNING - Headrest Removal

NEVER allow anyone to ride in a seat with the headrest removed. Headrests can provide critical neck and head support in a crash.

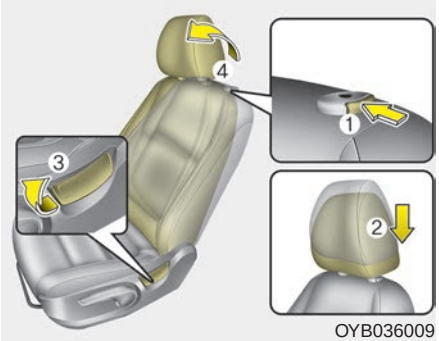

To reinstall the headrest :

1. Put the headrest poles (2) into the holes while pressing the release button (1).
2. Recline the seatback (4) with the recline lever (3).
3. Adjust the headrest to the appropriate height.

⚠ WARNING - Headrest Reinstallation

To reduce the risk of injury to the head or neck, always make sure the head rest is locked into position and adjusted properly after reinstalling.

Seatback pocket

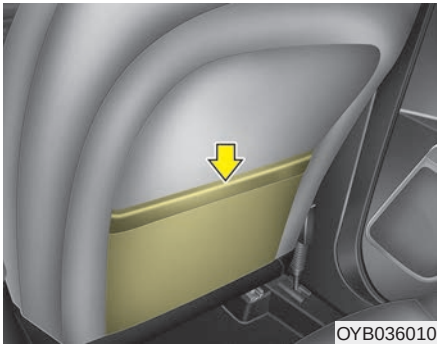
OYB036010

The seatback pocket is provided on the back of the front passenger's seatback.

⚠ WARNING - Seatback pocket

Do not put heavy or sharp objects in the seatback pocket. An occupant could contact such objects in a crash. Heavy objects in the front passenger seatback could also interfere with the air bag sensing system.

Rear seat adjustment

Headrest (for rear seat)

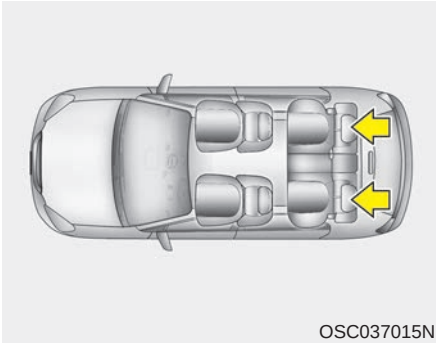
OSC037015N

The rear seat is equipped with headrests in left and right side seating positions for the occupant's safety and comfort.

The headrest not only provides comfort for passengers, but also helps protect the head and neck in the event of a collision.

For maximum effectiveness in case of an accident, the headrest should be adjusted so the middle of the headrest is at the same height of the center of gravity of an occupant's head. Generally, the center of gravity of most people's head is similar with the height as the top of their eyes.

Also adjust the headrest as close to your head as possible. For this reason, the use of a cushion that holds the body away from the seatback is not recommended.

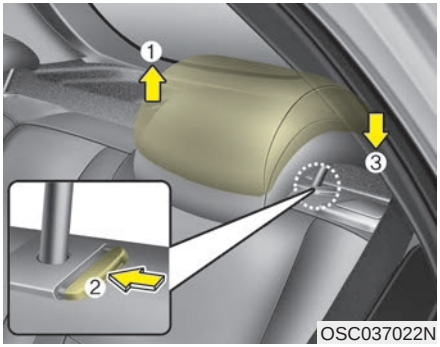

OSC037022N

Adjusting the height up and down (if equipped)

To raise the headrest, pull it up to the desired position (1). To lower the headrest, push and hold the release button (2) on the headrest support and lower the headrest to the desired position (3).

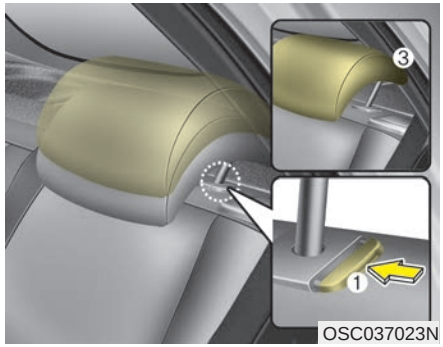

OSC037023N

Removal and installation

To remove the headrest, raise it as far as it can go then press the release button (1) while pulling the headrest upward (2).

To reinstall the headrest, put the headrest poles (3) into the holes while pressing the release button (1). Then adjust it to the appropriate height and ensure that it locks in position.

Folding the rear seat

The rear seatbacks may be folded to facilitate carrying long items or to increase the luggage capacity of the vehicle.

⚠ WARNING - Folded Seatback

Never allow passengers to sit on top of the folded down seatback while the vehicle is moving. This is not a proper seating position and no seat belts are available for use. This could result in serious injury or death in case of an accident or sudden stop.

⚠ WARNING - Objects

Objects carried on the folded down seatback should not extend higher than the top of the front seatbacks. This could allow cargo to slide forward and cause injury or damage during sudden stops.

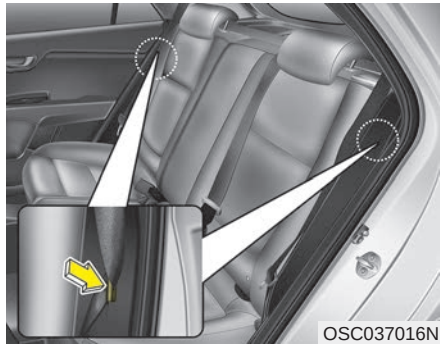
OSC037016N

To fold down the rear seatback (if equipped):

1. When folding the seat back, insert the rear seat belt buckle in the pocket between the rear seatback and cushion then make sure both seatbelts do not interfere with stowed luggage and cargo. Then, insert the seat belt into the two holes located on both sides.
2. Set the front seatback to the upright position and if necessary, slide the front seat forward.
3. Lower the rear headrests to lowest position.

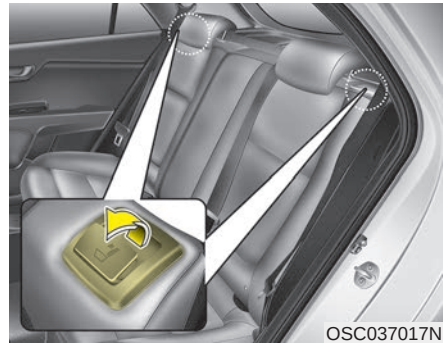
OSC037017N

4. Pull the lock release lever and fold the rear seatback forward and down firmly.

To unfold the rear seat

1. To use the rear seat, lift and pull the seatback rearward. Pull the seatback firmly until it clicks into place. Make sure the seatback is locked in place. When you return the seatback to its upright position, always be sure it has locked into position by pushing on the top of the seatback.
2. Return the rear seat belt to the proper position.
3. When the seatback is completely installed, check the seatback folding lever again.

When returning the rear seatbacks to the upright position, remember to return the rear shoulder belts to their proper position.

⚠ CAUTION

Be careful when loading cargo through the rear passenger seats to prevent damage to the vehicle interior.

⚠ WARNING

Unless the driver's position is properly set according to the driver's physical figure, do not fold the rear seat. It may increase body injuries in a sudden stop or collision.

⚠ WARNING - Uprighting seat

When you return the seatback to its upright position, hold the seatback and return it slowly. If the seatback is returned without holding it, the back of the seat could spring forward resulting in injury caused by being struck by the seatback.

⚠ WARNING

When you return the rear seatback to its upright position after being folded down:

Be careful not to damage the seat belt webbing or buckle. Do not allow the seat belt webbing or buckle to get caught or pinched in the rear seat. Ensure that the seatback is completely locked into its upright position by pushing on the top of the seatback. Otherwise, in an accident or sudden stop, the seat could fold down and allow cargo enter the passenger compartment, which could result in serious injury or death.

⚠ WARNING - Cargo

Cargo should always be secured to prevent it from being thrown about the vehicle in a collision and causing injury to the vehicle occupants. Do not place objects in the rear seats, since they cannot be properly secured and may hit the front seat occupants in a collision.

⚠ WARNING - Objects

Objects carried on the folded down seatback should not extend higher than the top of the front seatbacks. This could allow cargo to slide forward and cause injury or damage during sudden stops.

SEAT BELTS

Seat belt restraint system

Seat belts are designed to bear upon the bony structure of the body, and should be worn low across the front of the pelvis, chest and shoulders, as applicable; wearing the lap section of the belt across the abdominal area must be avoided.

Seat belts should be adjusted as firmly as possible, consistent with comfort, to provide the protection for which they have been designed.

A slack belt will greatly reduce the protection afforded to the wearer.

Care should be taken to avoid contamination of the webbing with polishes, oils and chemicals, and particularly battery acid. Cleaning may safely be carried out using mild soap and water. The belt should be replaced if webbing becomes frayed, contaminated or damaged.

- For maximum restraint system protection, the seat belts must always be used whenever the vehicle is moving. A properly positioned shoulder belt should be positioned midway over your shoulder across your collarbone.
- Never allow children to ride in the front passenger seat. See child restraint system section for further discussion.
- No modifications or additions should be made by the user which would either prevent the seat belt adjusting devices from operating to remove slack, or prevent the seat belt assembly from being adjusted to remove slack.
- When you fasten the seat belt, be careful not to latch the seat belt in buckles of other seats. It's very dangerous and you may not be protected by the seat belt properly.
- Do not unfasten the seat belt and do not fasten and unfasten the seat belt repeatedly while driving. This could result in loss of control, and an accident causing death, serious injury, or property damage.
- When fastening the seat belt, make sure that the seat belt does not pass over objects that are hard or can break easily.

⚠ WARNING - Shoulder belt

Never wear the shoulder belt under your arm or behind your back. An improperly positioned shoulder belt cannot protect the occupant in a crash.

⚠ WARNING - Damaged seat belt

Replace the entire seat belt assembly if any part of the webbing or hardware is damaged as you can no longer be sure that a damaged seat belt will provide protection in a crash.

⚠ WARNING - Twisted seat belt

Make sure your seat belt is not twisted when worn. A twisted seat belt may not properly protect you in an accident and could even cut into your body.

⚠ WARNING - Seat belt buckle

Do not allow foreign material (gum, crumbs, coins, etc.) to obstruct the seat belt buckle. This may prevent the seat belt from fastening securely.

Seat belt warning

OSC037018N

As a reminder to the driver, the driver's seat belt warning lights will illuminate and warning chime will sound for approximately 6 seconds each time you turn the ignition switch ON regardless of belt fastening.

If the driver's seat belt is not fastened when the ignition switch is turned ON or if it is disconnected after the ignition switch is turned ON, the seat belt warning light will illuminate until the belt is fastened.

If you continue not to fasten the seat belt and you drive over 9 km/h (6 mph), the illuminated warning light will illuminate.

If you continue not to fasten the seat belt and you drive over 20 km/h (12 mph), the seat belt warning chime will sound for approximately 100 seconds and the corresponding warning light will blink.

If you unfasten the seat belt while driving under 20 km/h (12 mph), the seat belt warning light will illuminate until the seat belt is fastened.

Seat belt - Driver's 3-point system with emergency locking retractor

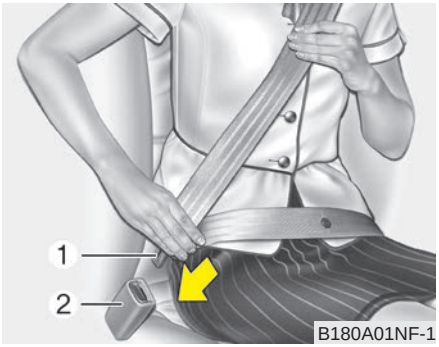

To fasten your seat belt:

To fasten your seat belt, pull it out of the retractor and insert the metal tab (1) into the buckle (2). There will be an audible "click" when the tab locks into the buckle.

The seat belt automatically adjusts to the proper length only after the lap belt portion is adjusted manually so that it fits snugly around your hips. If you lean forward in a slow, easy motion, the belt will extend and let you move around. If there is a sudden stop or impact, however, the belt will lock into position. It will also lock if you try to lean forward too quickly.

If you are unable to pull out the seat belt from the retractor, firmly pull the belt out and release it. Then you will be able to pull the belt out smoothly.

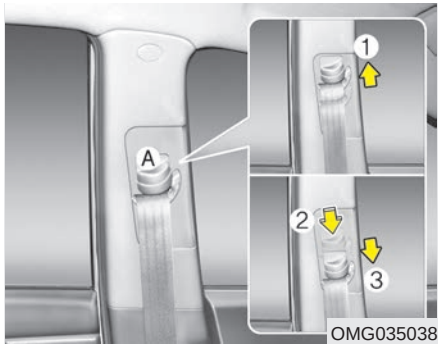

Height adjustment

You can adjust the height of the shoulder belt anchor to one of the 3 positions for maximum comfort and safety.

The height of the adjusting seat belt should not be too close to your neck. The shoulder portion should be adjusted so that it lies across your chest and midway over your shoulder nearest the door and not your neck.

To adjust the height of the seat belt anchor, lower or raise the height adjuster into an appropriate position.

To raise the height adjuster, pull it up (1). To lower it, push it down (3) while pressing the height adjuster button (2).

Release the button to lock the anchor into position. Try sliding the height adjuster to make sure that it has locked into position. Never position the shoulder belt across your neck or face.

Improperly positioned seat belts can cause serious injuries in an accident.

⚠ WARNING - Seat belt replacement

Replace your seat belts after being in an accident. Failure to replace seat belts after an accident could leave you with damaged seat belts that will not provide protection in the event of another collision.

⚠ WARNING - Shoulder belt positioning

Never position the shoulder belt across your neck or face.

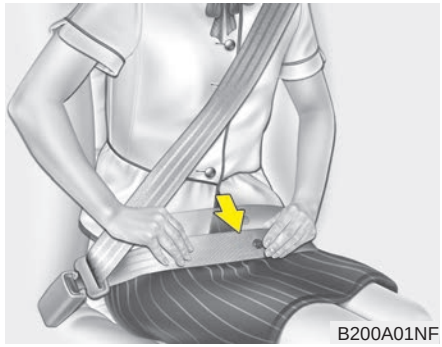

⚠ WARNING

You should place the lap belt portion as low as possible and snugly across your hips, not on your waist. If the lap belt is located too high on your waist, it may increase the chance of injury in the event of a collision. Both arms should not be under or over the belt. Rather, one should be over and the other under, as shown in the illustration.

Never wear the seat belt under the arm near the door.

Seat belts - Front passenger and rear seat 3-point system with combination locking retractor

To fasten your seat belt

Combination retractor type seat belts are installed in the rear seat positions to help accommodate the installation of child restraint systems. Although a combination retractor is also installed in the front passenger seat position, it is strongly recommended that children always be seated in the rear seat. NEVER place an infant restraint system in the front seat of the vehicle.

This type of seat belt combines the features of both an emergency locking retractor seat belt and an automatic locking retractor seat belt. To fasten your seat belt, pull it out of the retractor and insert the metal tab into the buckle. There will be an audible "click" when the tab locks into the buckle. When not securing a child restraint, the seat belt operates in the same way as the driver's seat belt (Emergency Locking Retractor Type).

It automatically adjusts to the proper length only after the lap belt portion of the seat belt is adjusted manually so that it fits snugly around your hips.

When the seat belt is fully extended from the retractor to allow the installation of a child restraint system, the seat belt operation changes to allow the belt to retract, but not to extend (Automatic Locking Retractor Type). Refer to “Using a child restraint system” in this section.

To convert from the automatic locking feature to the emergency locking operation mode, allow the unbuckled seat belt to fully retract.

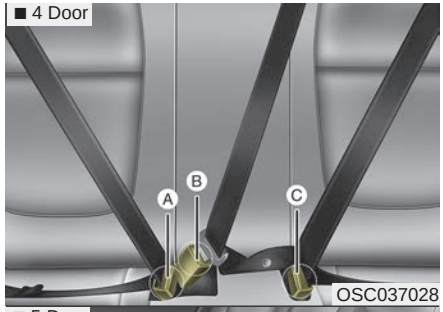

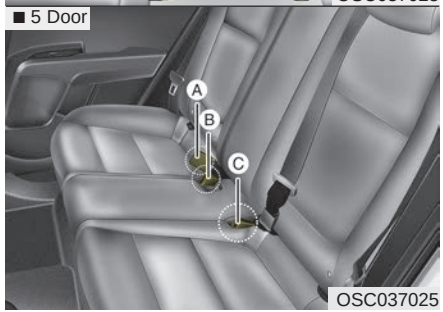

The seat belt should be locked into the buckle on each seat cushion to be properly fastened.

❊ A : Rear right seat belt fastening buckle

B : Rear center seat belt fastening buckle

C : Rear left seat belt fastening buckle

■ 4 Door

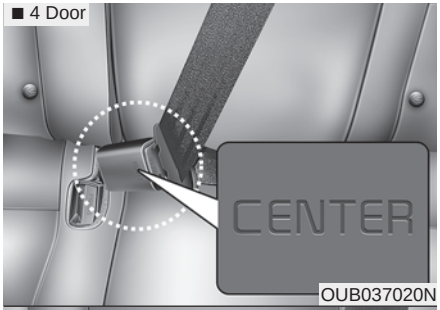

OUB037020N

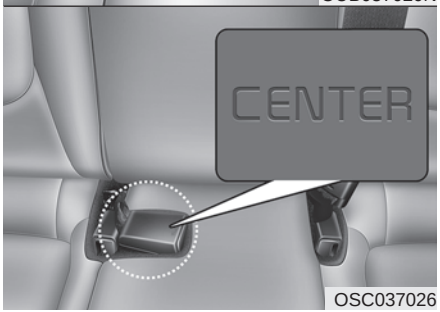

OSC037026

When using the rear center seat belt, the buckle with the “CENTER” mark must be used.

⚠ CAUTION

Do not forcefully lock the left or right seat belt latch into the center seat belt buckle. This may cause damage to the center buckle and prevent the buckle from properly latching in the future.

⚠ WARNING

Be sure you are using the correct latch for the center seat belt buckle. Forcing the left or right seat belt latch into the center buckle can create the appearance of a secure seat belt when in fact the passenger is not properly fastened in the seat belt.

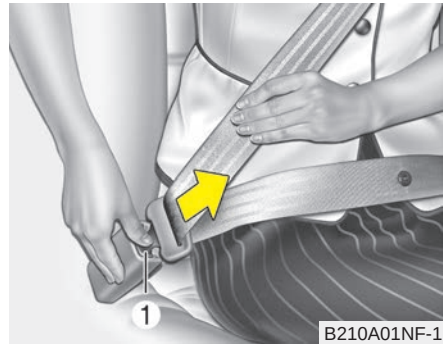

B210A01NF-1

To release the seat belt

The seat belt is released by pressing the release button (1) of the locking buckle. When it is released, the belt should automatically draw back into the retractor.

If this does not happen, check the belt to be sure it is not twisted, then try again.

Pre-tensioner seat belt

Your vehicle is equipped with driver's and front passenger's pre-tensioner seat belts.

1. Retractor pre-tensioner

The retractor pre-tensioner is a supplemental system of the seat belts. The purpose of the retractor pre-tensioner is to tighten the shoulder belt against the occupant's upper body in certain frontal collisions.

The pre-tensioner seat belts may be activated, when a collision is severe enough, together with the air bags.

When the vehicle stops suddenly, or if the occupant tries to lean forward too quickly, the seat belt retractor may lock into position. In certain frontal collisions (or side collisions), the pre-tensioner may activate and pull the seat belt into tighter contact against the occupant's body.

If the system senses excessive tension on the driver or passenger's seat belt when the pre-tensioner activates, the load limiter inside the retractor pre-tensioner will release some of the pressure on the affected seat belt.

2. Emergency Fastening Device (EFD)

The Emergency Fastening Device (EFD) is a supplemental system of the seat belts. The purpose of the EFD is to tighten the lap belt against the occupant's pelvis in certain collisions.

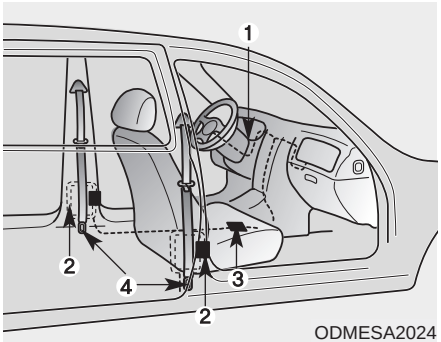

ODMESA2024

The seat belt pre-tensioner system consists mainly of the following components. Their locations are shown in the illustration:

1. SRS air bag warning light
2. Retractor pre-tensioner assembly
3. SRS control module
4. Emergency fastening device (EFD)

To obtain maximum benefit from a pre-tensioner seat belt:

1. The seat belt must be worn correctly and adjusted to the proper position. Please read and follow all of the important information and precautions about your vehicle's occupant safety features - including seat belts and air bags - that are provided in this manual.
2. Be sure you and your passengers always wear seat belts properly.

✻ NOTICE

When the pre-tensioner seat belts are activated, a loud noise may be heard and fine dust, which may appear to be smoke, may be visible in the passenger compartment. These are normal operating conditions and are not hazardous.

⚠ WARNING - Skin irritation

Wash all exposed skin areas thoroughly after an accident in which the pre-tensioner seat belts were activated. The fine dust from the pre-tensioner activation may cause skin irritation and should not be breathed for prolonged periods.

Because the sensor that activates the SRS air bag is connected with the pre-tensioner seat belt, the SRS air bag warning light ( ) on the instrument panel will illuminate for approximately 6 seconds after the ignition switch has been turned to the ON position, and then it should turn off.If the pre-tensioner seat belt does not work properly, this warning light will illuminate even if the SRS air bag has not malfunctioned. If the SRS air bag warning light does not illuminate when the ignition switch is turned ON, or if it remains illuminated after illuminating for approximately 6 seconds, or if it illuminates while the vehicle is being driven, please have an authorized Kia dealer inspect the pre-tensioner seat belt or SRS air bag system as soon as possible.

✻ NOTICE

Do not attempt to service or repair the pre-tensioner seat belt system in any manner. Do not attempt to inspect or replace the pre-tensioner seat belts yourself. This must be done by an authorized Kia dealer.

⚠ WARNING - Hot pre-tensioner

Do not touch the pre-tensioner seat belt assemblies for several minutes after they have been activated. When the pre-tensioner seat belt mechanism fires during a collision the pre-tensioner becomes hot and can burn you.

Pre-tensioners are designed to operate only one time. After activation, pre-tensioner seat belts must be replaced. If the pre-tensioner must be replaced, contact an authorized Kia dealer.

Seat belt precautions

Infant or small child

You should be aware of the specific requirements in your country. Child and/or infant seats must be properly placed and installed in the rear seat. For more information about the use of these restraints, refer to “Child restraint system” in this section.

Larger children

Children who are too large for child restraint systems should always occupy the rear seat and use the available lap/shoulder belts. The lap portion should be fastened snug on the hips and as low as possible. Periodically check belt fit. A child's squirming could put the belt out of position. Children are given the most safety in the event of an accident when they are restrained by a proper restraint system in the rear seat. If a larger child (over age 13) must be seated in the front seat, the child should be securely restrained by the available lap/shoulder belt and the seat should be placed in the rearmost position. Children age 13 and under should be restrained securely in the rear seat. NEVER place a child age 13 and under in the front seat. NEVER place a rear facing child seat in the front seat of a vehicle.

If the shoulder belt portion slightly touches the child's neck or face, try placing the child closer to the center of the vehicle. If the shoulder belt still touches their face or neck they need to be returned to a child restraint system.

⚠ WARNING - Small children

Do not allow small children to ride in the vehicle without an appropriate child restraint system. If the shoulder belt comes in contact with your child's neck or face your child is too small to ride in the vehicle. In a crash the seat belt will inflict injury to your child's neck, throat and face.

Restraint of pregnant women

Pregnant women should wear lap/shoulder belt assemblies whenever possible according to specific recommendations by their doctors. The lap portion of the belt should be worn AS SNUGLY AND LOW AS POSSIBLE on the hips, not across the abdomen.

⚠ WARNING - Pregnant women

Pregnant women must never place the lap portion of the seat belt above or on the abdomen where the fetus is located. The force of the seat belt during a collision will crush the fetus.

Injured person

A seat belt should be used when an injured person is being transported. When this is necessary, you should consult a physician for recommendations.

One person per belt

Two people (including children) should never attempt to use a single seat belt. This could increase the severity of injuries in case of an accident.

Do not lie down

To reduce the chance of injuries in the event of an accident and to achieve maximum effectiveness of the restraint system, all passengers should be sitting up and the front seats should be in an upright position when the vehicle is moving. A seat belt cannot provide proper protection if the person is lying down in the rear seat or if the front seat is in a reclined position.

Care of seat belts

Seat belt systems should never be disassembled or modified. In addition, care should be taken to assure that seat belts and belt hardware are not damaged by seat hinges, doors or other abuse.

Periodic inspection

All seat belts should be inspected periodically for wear or damage of any kind. Any damaged parts should be replaced as soon as possible.

Keep belts clean and dry

Seat belts should be kept clean and dry. If belts become dirty, they can be cleaned by using a mild soap solution and warm water. Bleach, dye, strong detergents or abrasives should not be used because they may damage and weaken the fabric.

When to replace seat belts

The entire in-use seat belt assembly or assemblies should be replaced if the vehicle has been involved in an accident. This should be done even if no damage is visible. Additional questions concerning seat belt operation should be directed to an authorized Kia dealer.

⚠ WARNING - Pinched Seat belts

Make sure that the webbing and/or buckle does not get caught or pinched in the rear seat when returning the rear seatback to its upright position. A caught or pinched webbing/buckle may become damaged and could fail during a collision or sudden stop.

⚠ WARNING

Seatbelts can become hot in a vehicle that has been closed up in sunny weather. They could burn infants and children.

CHILD RESTRAINT SYSTEM (CRS)

Children under age 13 must always ride in the rear seats and must always be properly restrained to minimize the risk of injury in an accident, sudden stop or sudden maneuver. According to accident statistics, children are safer when properly restrained in the rear seats than in the front seat. Larger children who are not in a child restraint should use one of the seat belts provided.

Most countries have child restraint laws which require children to travel in approved child restraint devices.

The laws governing the age or height/weight restrictions at which seat belts can be used instead of child restraints differs among countries, so you should be aware of the specific requirements in your country, and where you are travelling. Child and/or infant safety seats must be properly placed and installed in the rear seat. You must use a commercially available child restraint system that meets the requirements of the Safety standards of your country.

Child restraint systems are generally designed to be secured in vehicle seats by seat belt, or by a tether anchor and/or LATCH anchors.

Children could be injured or killed in a crash if their restraints are not properly secured. For small children and babies, a child seat or infant seat must be used. Before buying a particular child restraint system, make sure it fits your car seat and seat belts, and fits your child. Follow all the instructions provided by the manufacturer when installing the child restraint system.

⚠ WARNING - Restraint location

Never install a child or infant seat on the front passenger's seat.

A child riding in the front passenger seat can be forcefully struck by an inflating air bag.

⚠ WARNING - Hot child restraint

A child restraint system can become very hot if it is left in a closed vehicle on a sunny day. Be sure to check the seat cover, buckles and latches before placing a child in the restraint system.

When the child restraint system is not in use, store it in the luggage area or fasten it with a seat belt so that it will not be thrown forward in case of a sudden stop or an accident.

⚠ WARNING - Holding children

Never hold a child in your arms or lap when riding in a vehicle. The violent forces created during a crash will tear the child from your arms and throw the child against the car's interior.

Always use a child restraint system which is appropriate for your child's height and weight.

⚠ WARNING - Seat belt use

Do not use one seat belt for two occupants at the same time. This will eliminate any safety benefit provided by the seat belt to the occupants.

Using a child restraint system

Rear- facing child restraint system

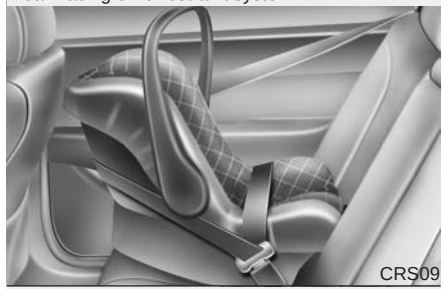

Forward-facing child restraint system

For small children and babies, the use of a child seat or infant seat is required. This child seat or infant seat should be of appropriate size for the child and should be installed in accordance with the manufacturer's instructions.

For safety reasons, we recommend that the child restraint system be used in the rear seats.

Since all passenger seat belts move freely under normal conditions and only lock under extreme or emergency conditions (emergency lock mode), you must manually change these seat belts to the auto lock mode to secure a child restraint.

If the seat belt does not operate as described in this section, have the system checked immediately by your authorized Kia dealer.

⚠ WARNING - Unattended Children

Never leave children unattended in a vehicle. The vehicle can heat up very quickly, resulting in injuries to the child in the vehicle.

⚠ WARNING - Child seat installation

- **Always follow the instructions provided by the child restraint system manufacturer. Child restraint system manufacturers know their products best.**
- **Failure to observe this manual's instructions regarding child restraint system and the instructions provided with the child restraint system could result in the improper installation of the child restraint system which may reduce the protection to your child in a crash or a sudden stop.**

✻ NOTICE

If the vehicle headrest prevents proper installation of a child seat (as described in the child seat system manual), the headrest of the respective seating position shall be readjusted or entirely removed.

Placing a passenger seat belt into the auto lock mode

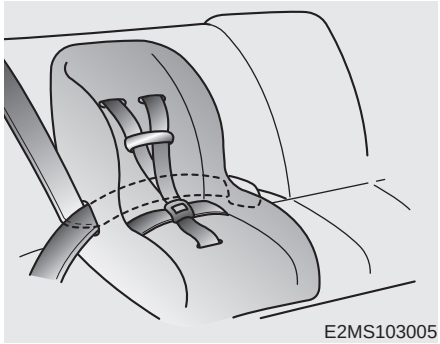

The auto lock mode will help prevent the normal movement of the child in the vehicle from causing the seat belt to loosen and compromise the child restraint system. To secure a child restraint system, use the following procedure.

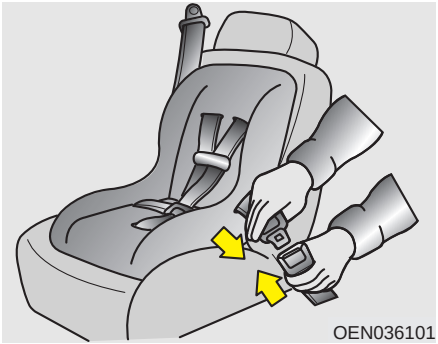

To install a child restraint system on the outboard or center rear seats, do the following:

1. Place the child restraint system in the seat and route the lap/shoulder belt around or through the restraint, following the restraint manufacturer's instructions. Be sure the seat belt webbing is not twisted.
2. Fasten the lap/shoulder belt latch into the buckle. Listen for the distinct "click" sound.

Position the release button so that it is easy to access in case of an emergency.

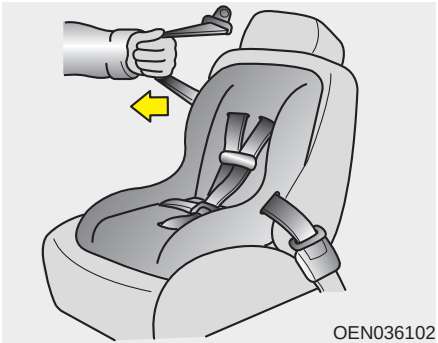

3. Pull the shoulder portion of the seat belt all the way out. When the shoulder portion of the seat belt is fully extended, it will shift the retractor to the “Auto Lock” (child restraint) mode.

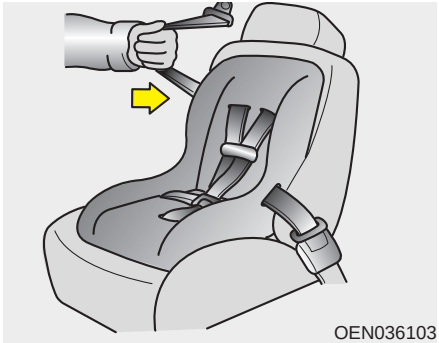

4. Slowly allow the shoulder portion of the seat belt to retract and listen for an audible “clicking” or “ratcheting” sound. This indicates that the retractor is in the “Auto Lock” mode. If no distinct sound is heard, repeat steps 3 and 4.

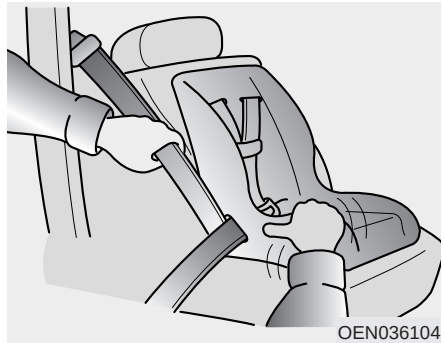

5. Remove as much slack from the belt as possible by pushing down on the child restraint system while feeding the shoulder belt back into the retractor.
6. Push and pull on the child restraint system to confirm that the seat belt is holding it firmly in place. If it is not, release the seat belt and repeat steps 2 through 6.
7. Double check that the retractor is in the “Auto Lock” mode by attempting to pull more of the seat belt out of the retractor. If you cannot, the retractor is in the “Auto Lock” mode.

The lap/shoulder belt automatically returns to the “emergency lock mode” whenever the belt is allowed to retract fully.

Therefore, the preceding seven steps must be followed each time a child restraint is installed.

To remove the child restraint, press the release button on the buckle and then pull the lap/shoulder belt out of the restraint and allow the seat belt to retract fully.

⚠ WARNING - Auto lock mode

Set the retractor to Automatic Lock mode when installing any child restraint system.

If the retractor is not in the Auto Lock mode, the child restraint can move when your vehicle turns or stops suddenly.

Securing a child restraint seat with tether anchorage system

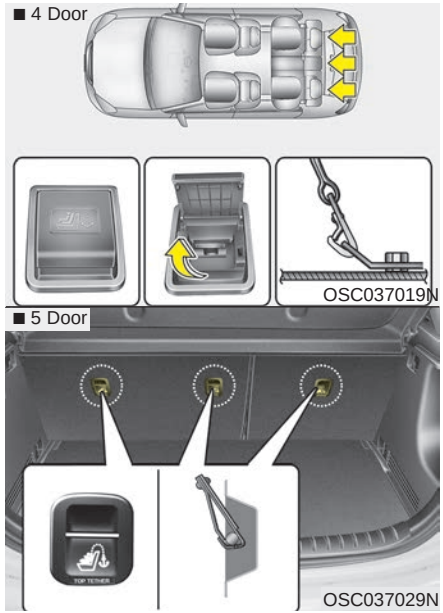

Child restraint hook holders are located on the package tray (4 Door) or the floor behind the rear seat (5 Door).

This symbol indicates the position of the tether anchor.

1. Route the child restraint seat tether strap over the seatback.

   For vehicles with adjustable headrests, route the tether strap under the headrest (remove the headrest and the re-install it) and between the headrest posts, otherwise route the tether strap over the top of the seatback.

2. Connect the tether strap hook to the appropriate child restraint hook holder and tighten to secure the child restraint seat.

⚠ WARNING - Tether strap

Never mount more than one child restraint to a single tether or to a single lower anchorage point. The increased load caused by multiple seats may cause the tethers or anchorage points to break.

Check that the child restraint system is secure by pushing and pulling it in different directions. Incorrectly fitted child restraints may swing, twist, tip or separate causing death or serious injury.

Securing a child restraint seat with child seat lower anchor system

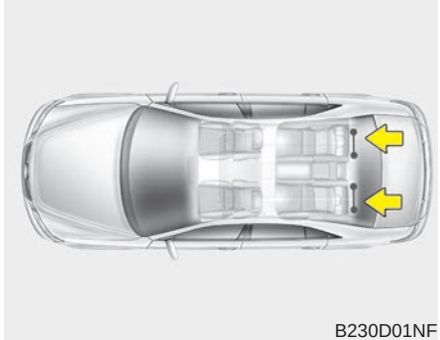

Some child seat manufacturers make child restraint seats that are labeled as LATCH or LATCH-compatible child restraint seats. LATCH stands for "Lower Anchors and Tethers for Children". These seats include two rigid or webbing mounted attachments that connect to two LATCH anchors at specific seating positions in your vehicle. This type of child restraint seat eliminates the need to use seat belts to attach the child seat in the rear seats.

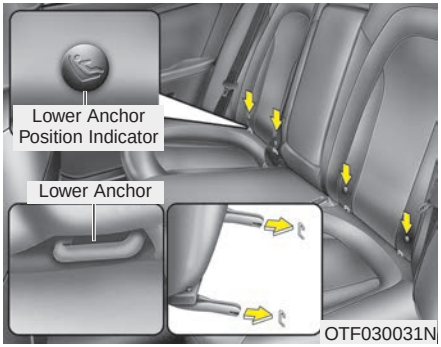

Child restraint symbols are located on the left and right rear seat backs to indicate the position of the lower anchors for child restraints.

⚠ WARNING - Unused rear seatbelts

Always fasten the seatbelts behind the child restraint seat when they are not used to secure the child seat. Failure to do so may result in child strangulation.

LATCH anchors have been provided in your vehicle. The LATCH anchors are located in the left and right outboard rear seating positions. Their locations are shown in the illustration. There is no LATCH anchor provided for the center rear seating position.

The LATCH anchors are located between the seatback and the seat cushion of the rear seat left and right outboard seating positions.

When you install your child's restraint system using the LATCH anchors buckle the shoulder lap belt, then lock the retractor and pull the belt to remove the slack in the belt so it lies flat against the vehicle seat.

Follow the child seat manufacturer's instructions to properly install child restraint seats with LATCH or LATCH-compatible attachments.

Once you have installed the LATCH child restraint, assure that the seat is properly attached to the LATCH and tether anchors.

Also, test the child restraint seat before you place the child in it. Tilt the seat from side to side. Also try to tug the seat forward. Check to see if the anchors hold the seat in place.

⚠ WARNING - LATCH lower anchors

Never attempt to attach a LATCH equipped seat in the center seating position. LATCH lower anchors are only to be used with the left and right rear outboard seating positions. You may damage the anchors or the anchors may fail and break in a collision.

AIR BAG - ADVANCED SUPPLEMENTAL RESTRAINT SYSTEM

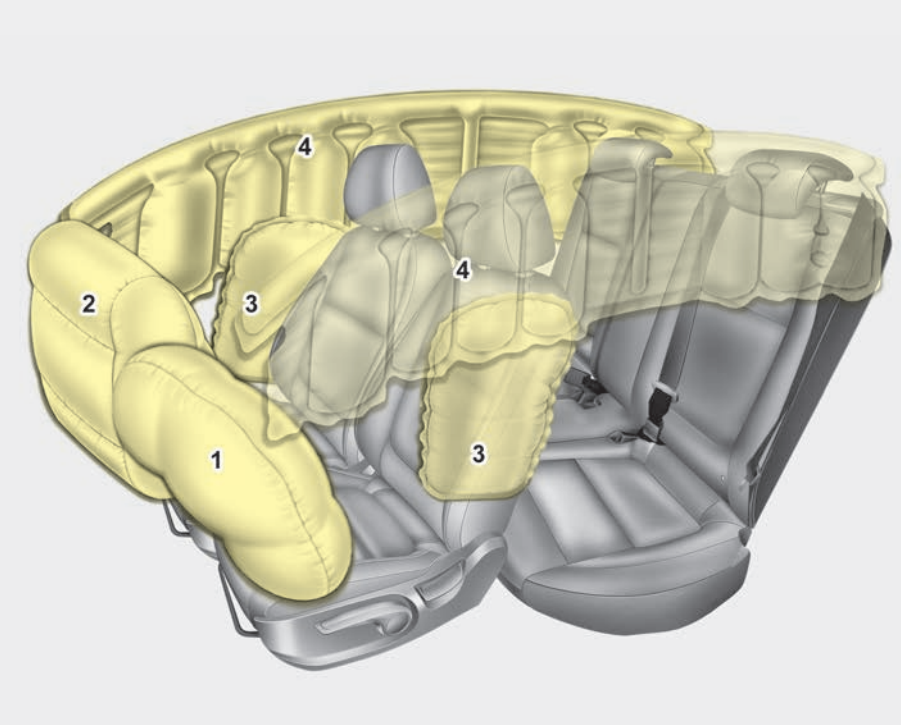

❊ The actual air bags in the vehicle may differ from the illustration.

OSC037030N

(1) Driver's front air bag
(2) Passenger's front air bag
(3) Side air bag
(4) Curtain air bag

Even in vehicles with air bags, you and your passengers must always wear the safety belts provided in order to minimize the risk and severity of injury in the event of a collision or rollover.

How does the air bag system operate

- Air bags are activated (able to inflate if necessary) only when the ignition switch is turned to the ON or START the appropriate position.
- Air bags inflate instantly in the event of serious frontal or side collision (if equipped with side air bag or curtain air bag) in order to help protect the occupants from serious physical injury.

  Generally, air bags are designed to inflate based upon the severity of a collision and its direction. These two factors determine whether the sensors produce an electronic deployment/ inflation signal.
- Air bag deployment depends on a number of complex factors including vehicle speed, angles of impact and the density and stiffness of the vehicles or objects which your vehicle hits in the collision. Though, factors are not limited to those mentioned above. Airbags deploy depending on the severity and angle of the impact.

  Airbags do not deploy in every impact situation.
- The front air bags will completely inflate and deflate in an instant.

  It is virtually impossible for you to see the air bags inflate during an accident. It is much more likely that you will simply see the deflated air bags hanging out of their storage compartments after the collision.
- In addition to inflating in certain side collisions, vehicles equipped with a rollover sensor, side and curtain air bags will inflate if the sensing system detects a rollover.

  When a rollover is detected, side and curtain air bags will remain inflated longer to help provide protection from ejection, especially when used in conjunction with the seat belts.
- In order to help provide protection in a severe collision, the air bags must inflate rapidly. The speed of air bag inflation is a consequence of extremely short time in which a collision occurs and the need to get the air bag between the occupant and the vehicle structures before the occupant impacts those structures. This speed of inflation reduces the risk of serious or life-threatening injuries in a severe collision and is thus a necessary part of air bag design.

However, air bag inflation can also cause injuries which can include facial abrasions, bruises and broken bones because the inflation speed also causes the air bags to expand with a great deal of force.

- **There are even circumstances under which contact with the steering wheel or passenger air bag can cause fatal injuries, especially if the occupant is positioned excessively close to the steering wheel or passenger air bag.**

⚠ WARNING - Airbag Inflation

Sit as far back as possible from the steering wheel while still maintaining comfortable control of the your vehicle. A distance of at least 25 cm (10 in) from your chest to the steering wheel is recommended. Failure to do so can result in airbag inflation injuries to the driver.

Noise and smoke

When the air bags inflate, they make a loud noise and they leave smoke and powder in the air inside of the vehicle. This is normal and is a result of the ignition of the air bag inflator. After the air bag inflates, you may feel substantial discomfort in breathing due to the contact of your chest to both the seat belt and the air bag, as well as from breathing the smoke and powder. **Open your doors and/or windows as soon as possible after the impact in order to reduce discomfort and prevent prolonged exposure to smoke and powder.**

Though smoke and powder are non-toxic,They may cause irritation to the skin (eyes,nose and throat, etc). If this is the case, wash and rinse with cold water immediately and consult a doctor if the symptom persists.

⚠ WARNING
- Hot components

Do not touch the air bag storage area's internal components immediately after air bag inflation. The air bag related parts in the steering wheel, instrument panel and the roof rails above the front and rear doors are very hot. Hot components can result in burn injuries.

⚠ WARNING

Do not install or place any accessories near air bag deployment areas, such as the instrument panel, windows, pillars, and roof rails.

Installing a child restraint on a front passenger's seat is forbidden

Never place a rear-facing child restraint in the front passenger's seat. If the air bag deploys, it would impact the rear-facing child restraint, causing serious or fatal injury.

In addition, do not place front-facing child restraint in the front passenger's seat either. If the front passenger air bag inflates, it would cause serious or fatal injuries to the child.

⚠ WARNING - Air bag deployment

When children are seated in the rear outboard seats of a vehicle equipped with side and/or curtain air bags, install the child restraint system as far away from the door side as possible. Inflation of the side and/or curtain air bags could impact the child.

⚠ WARNING

Do not install or place any accessories new air bag deployment areas.

Air bag warning light

The purpose of the air bag warning light in your instrument panel is to alert you of a potential problem with your air bag - Supplemental Restraint System (SRS).

When the ignition switch is turned ON, the indicator light should illuminate for approximately 6 seconds, then go off.

Have the system checked by an authorized Kia dealer if:

- The light does not turn on briefly when you turn the ignition ON.
- The light stays on after illuminating for approximately 6 seconds.
- The light comes on while the vehicle is in motion.

SRS components and functions

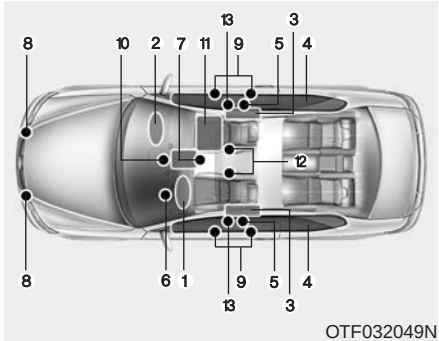

The SRS consists of the following components:

1. Driver's front air bag module
2. Passenger's front air bag module
3. Side air bag modules
4. Curtain air bag modules
5. Retractor pre-tensioner assemblies*
6. Air bag warning light
7. SRS control module (SRSCM) / Rollover sensor

8. Front impact sensors
9. Side impact sensors
10. PASSENGER AIR BAG “OFF” indicator (Front passenger’s seat only)
11. Occupant detection system (Front passenger’s seat only)
12. Driver’s and front passenger’s seat belt buckle sensors
13. Emergency fastening device (EFD)

* : if equipped

The SRSCM continually monitors all SRS components while the ignition switch is ON to determine if a crash impact is severe enough to require air bag deployment or pre-tensioner seat belt deployment.

The SRS air bag warning light on the instrument panel will illuminate for about 6 seconds after the ignition switch is turned to the ON position, after which the air bag warning light should go out.

If any of the following conditions occurs, this indicates a malfunction of the SRS. Have an authorized Kia dealer inspect the air bag system as soon as possible.

- The light does not turn on briefly when you turn the ignition ON.
- The light stays on after illuminating for approximately 6 seconds.
- The light comes on while the vehicle is in motion.

Driver’s front air bag (1)

B240B01L

The air bag modules are located both in the center of the steering wheel and in the front passenger's panel above the glove box. When the SRSCM detects a sufficiently severe impact to the front of the vehicle, it will automatically deploy the front air bags.

Driver's front air bag (2)

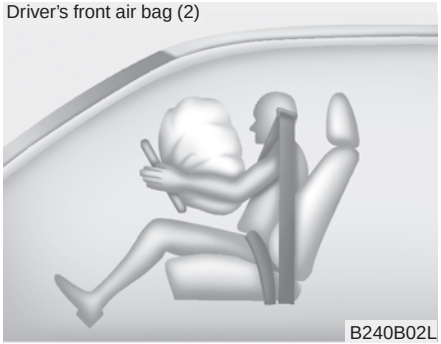

Upon deployment, tear seams molded directly into the pad covers will separate under pressure from the expansion of the air bags. Further opening of the covers then allows full inflation of the air bags.

Driver's front air bag (3)

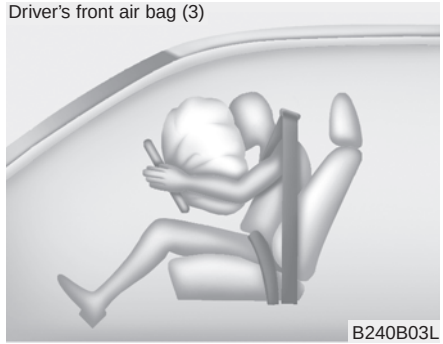

A fully inflated air bag, in combination with a properly worn seat belt, slows the driver's or the passenger's forward motion, reducing the risk of head and chest injury.

After complete inflation, the air bag immediately starts deflating, enabling the driver to maintain forward visibility and the ability to steer or operate other controls.

Passenger's front air bag

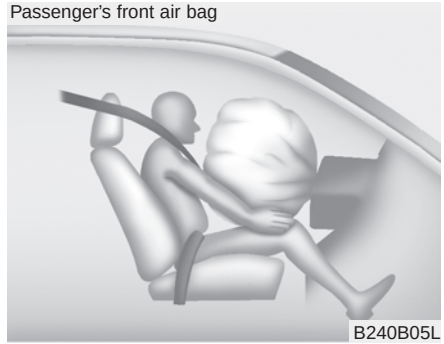

⚠ WARNING - Air bag obstructions

Do not install or place any accessories on the steering wheel, instrument panel, or on the front passenger's panel above the glove box in a vehicle Such objects may become dangerous projectiles if the air bag deploys.

⚠ WARNING - Flying objects

Do not place any objects (an umbrella, bag, etc.) between the front door and the front seat. Such objects may become dangerous projectiles if the side airbag inflates.

- If an air bag deploys, there may be a loud noise followed by a fine dust released in the vehicle. These conditions are normal and are not hazardous - the air bags are packed in this fine powder. The dust generated during air bag deployment may cause skin or eye irritation as well as aggravate asthma for some persons. Always wash all exposed skin areas thoroughly with cold water and a mild soap after an accident in which the air bags were deployed.
- The SRS can function only when the Engine Start/Stop button is in the ON position. If the SRS air bag warning light does not illuminate, or continuously remains on after illuminating for about 6 seconds when the ignition switch is turned to the ON position, or after the engine is started, comes on while driving, the SRS is not working properly. If this occurs, have your vehicle immediately inspected by an authorized Kia dealer.

✻ NOTICE

Before you replace a fuse or disconnect a battery terminal, turn the ignition switch to the LOCK position and remove the ignition key. Never remove or replace the air bag related fuse(s) when the ignition switch is in the ON position. Failure to heed this warning will cause the SRS air bag warning light to illuminate.

Occupant detection system

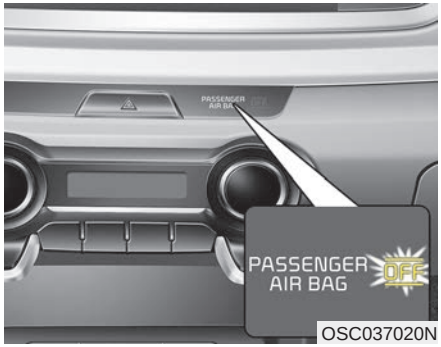

OSC037020N

Your vehicle is equipped with an occupant detection system in the front passenger's seat.

The occupant detection system is designed to detect the presence of a properly-seated front passenger and determine if the passenger's front air bag should be enabled (may inflate) or not. Only the front passenger front air bag is controlled by the Occupant Detection System.

Do not put anything in front of the passenger air bag OFF indicator.

Main components of occupant detection system

- A detection device located within the front passenger seat cushion.
- An electronic system which determines whether the passenger air bag systems should be activated or deactivated.
- An indicator light located on the instrument panel which illuminates the words PASSENGER AIR BAG “OFF” indicating the front passenger air bag system is deactivated.
- The instrument panel air bag warning light is interconnected with the occupant detection system.

If the front passenger seat is occupied by a person that the system determines to be of adult size, and he/she sits properly (sitting upright with the seatback in an upright position, centered on the seat cushion with their seat belt on, legs comfortably extended and their feet on the floor), the PASSENGER AIR BAG “OFF” indicator will turn off and the front passenger's air bag will be able to inflate, if necessary, in frontal crashes.

You will find the PASSENGER AIR BAG “OFF” indicator on the center facia panel. This system detects the conditions 1~4 in the following table and activates or deactivates the front passenger air bag based on these conditions.

Always be sure that you and all vehicle occupants are seated and restrained properly (sitting upright with the seat in an upright position, centered on the seat cushion, with the person’s legs comfortably extended, feet on the floor, and wearing the safety belt properly) for the most effective protection by the air bag and the safety belt.

- The ODS (Occupant Detection System) may not function properly if the passenger takes actions which can defeat the detection system. These include:

(1) Failing to sit in an upright position.

(2) Leaning against the door or center console.

(3) Sitting towards the sides or the front of the seat.

(4) Putting legs on the dashboard or resting them on other locations which reduce the passenger weight on the front seat.

(5) Improperly wearing the safety belt.

(6) Reclining the seat back.

Condition and operation in the front passenger occupant detection system

Condition detected by the occupant detection system	Indicator/Warning light		Devices
	PASSENGER AIR BAG “OFF” indicator light	SRS warning light	Front passenger air bag
1. Adult *1 or child age 13 and up*2	Off	Off	Activated
2. Infant or child restraint system with 12 months old*3 *4	On	Off	Deactivated
3. Unoccupied	On	Off	Deactivated
4. Malfunction in the system	Off	On	Activated

*1) The system judges a person of adult size as an adult. When a smaller adult sits in the front passenger seat, the system may recognize him/her as a child depending on his/her physique and posture.

*2) Do not allow children to ride in the front passenger seat. When a smaller child than the same age sits in the front passenger seat, the system may recognize him/her as an infant depending on his/her physique or posture.

*3) Never install a child restraint system on the front passenger seat.

*4) The PASSENGER AIR BAG “OFF” indicator may turn on or off when a child above 12 months to 12 years old (with or without child restraint system) sits in the front passenger seat. This is a normal condition.

⚠ CAUTION

- ***Do not install a child restraint seat in the passenger seat when the seat is heavily soaked with any type of liquid.***
- ***Do not alter or remodel the ODS (Occupant Detection System). This may damage the system and prevent its proper function in a collision.***

⚠ WARNING - ODS System

Riding in an improper position adversely affects the Occupant Detection System and may result in the deactivation of the front passenger airbag. It is important for the driver to instruct the passenger as to the proper seating instructions as contained in this manual.

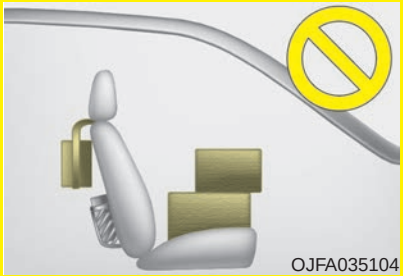

- Do not place a heavy load in the front passenger seatback pocket or on the front passenger seat.

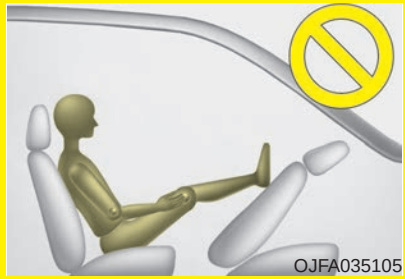

- Do not place feet on the front passenger seatback.

- Never sit with hips shifted towards the front of the seat.

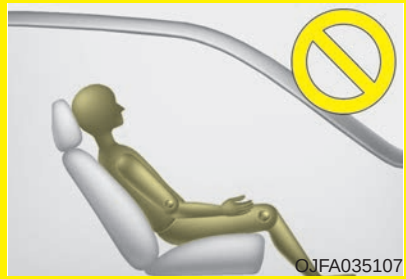

- Never excessively recline the front passenger seatback.

- Do not sit on the passenger seat wearing heavily padded clothes such as ski wear and hip protector.

(Continued)

(Continued)

- **Never place feet on the dashboard.**

- **Do not use car seat accessories such as thick blankets and cushions which cover up the car seat surface.**

- **Never lean on the door or center console.**
- **Never sit on one side of the front passenger seat.**

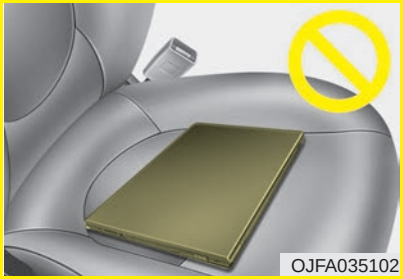

- **Do not place electronic devices such as laptops, DVD player, or conductive materials such as water bottles on the passenger seat.**

Do not use electronic devices such as laptops and satellite radios which use inverter chargers.

⚠ WARNING
- Wet Passenger Seat

Do not spill liquid in the passenger seat. Spilled liquid on the passenger seat may cause the air bag warning light to illuminate or malfunction. If any liquid is spilled, make sure the seat has been completely dried before driving the vehicle.

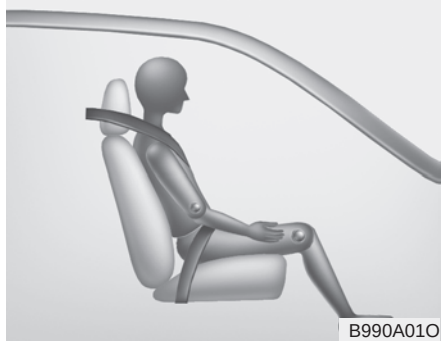

When an adult is seated in the front passenger seat, if the PASSENGER AIR BAG “OFF” indicator is on, turn the ignition switch to the LOCK position and ask the passenger to sit properly (sitting upright with the seat back in an upright position, centered on the seat cushion with their seat belt on, legs comfortably extended and their feet on the floor). Restart the engine and have the person remain in that position. This will allow the system to detect the person and to enable the passenger air bag.

If the PASSENGER AIR BAG “OFF” indicator is still on, ask the passenger to move to the rear seat.

⚠ WARNING - “AIR BAG OFF” light

Do not allow an adult passenger to ride in the front seat when the PASSENGER AIR BAG “OFF” indicator is illuminated, because the air bag will not deploy in the event of a crash. The driver must instruct the passenger to reposition himself in the seat. Failure to properly position yourself may lead to air bag deactivation resulting in air bag non-deployment in a collision. If the PASSENGER AIR BAG “OFF” indicator remains illuminated after the passenger repositions themselves properly and the car is restarted, it is recommended that passenger move to the rear seat because the passenger's front air bag will not deploy.

✻ NOTICE

- Do not use car seat cushions that cover up the surface of the seat and aftermarket manufactured passenger seat heaters.
- After conducting car interior cleaning using steam or detergent, the seat should be dried properly. Afterward, check for normal operation of the "PASS AIR BAG "OFF" and air bag warning lights.
- Any service related to the passenger seat and the ODS must be done at Kia service center.
- After the passenger seat has been removed or installed for repair purposes, check for normal operation of the "PASS AIR BAG "OFF" and air bag warning lights with a person seated or not seated in the passenger seat.

⚠ WARNING - ODS System

Riding in an improper position adversely affects the Occupant Detection System and may result in the deactivation of the front passenger airbag. It is important for the driver to instruct the passenger as to the proper seating instructions as contained in this manual.

✻ NOTICE

When the "PASS AIR BAG "OFF" symbol is illuminated, the passenger air bag system will not operate. The passenger air bag system will operate when necessary if the symbol is not illuminated.

✻ NOTICE

Do not modify or replace the front passenger seat. Don't place anything on or attach anything such as a blanket, front seat cover or after market seat heater to the front passenger seat. This can adversely affect the occupant detection system.

✻ NOTICE

The PASSENGER AIR BAG "OFF" indicator illuminates for about 4 seconds after the ignition switch is turned to the ON position or after the engine is started. If the front passenger seat is occupied, the occupant detection sensor will then classify the front passenger after several more seconds.

Any child age 12 and under should ride in the rear seat. Children too large for child restraints should use the available lap/shoulder belts. No matter what type of crash, children of all ages are safer when restrained in the rear seat.

⚠ WARNING - ODS Interference

- **Do not place a heavy load or an active electronic device (ex. laptop computer, after market DMB/navigation/satellite audio, video game machine, MP3, etc.) in the front passenger seatback pocket or on the front passenger seat.**
- **Do not hang any items such as seatback table on the front passenger seatback.**
- **Do not place feet on the front passenger seatback.**
- **Do not place any items under the front passenger seat.**
- **Do not place sharp objects on the front passenger seat. These may damage the occupant detection system, if they puncture the seat cushion.**
- **Do not spill any liquids on the seat.**

(Continued)

(Continued)

Any of the above could interfere with the proper operation of the ODS sensor thereby increasing the risk of an injury in an accident.

If the occupant detection system is not working properly, the SRS air bag warning light on the instrument panel will illuminate because the passenger's front air bag is connected with the occupant detection system. If there is a malfunction of the occupant detection system, the PASSENGER AIR BAG "OFF" indicator will not illuminate and the passenger's front air bag will inflate in frontal impact crashes even if there is no occupant in the front passenger's seat.

✻ NOTICE

Air bags can only be used once - have an authorized Kia dealer replace the air bag immediately after deployment.

- Even though your vehicle is equipped with the occupant detection system, never install a child restraint system in the front passenger's seat. A deploying air bag can forcefully strike a child resulting in serious injuries or death. Any child age 12 and under should ride in the rear seat. Children too large for child restraints should use the available lap/shoulder belts. No matter what type of crash, children of all ages are safer when restrained in the rear seat.
- If the PASSENGER AIR BAG “OFF” indicator is illuminated when the front passenger's seat is occupied by an adult and he/she sits properly (sitting upright with the seatback in an upright position, centered on the seat cushion with their seat belt on, legs comfortably extended and their feet on the floor), have that person sit in the rear seat.

Driver's and passenger's front air bag

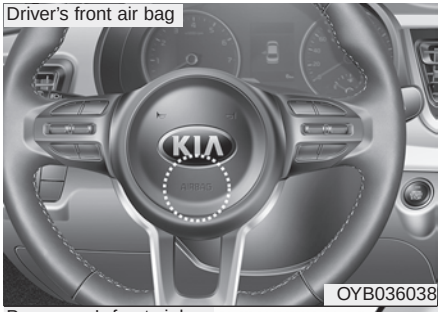

Driver’s front air bag
OYB036038

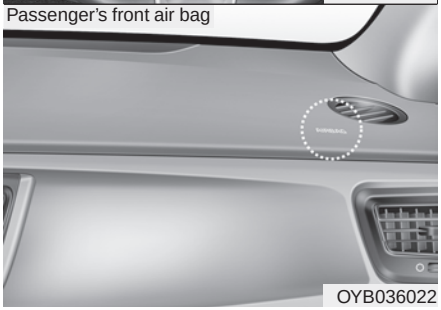
Passenger's front air bag
OYB036022

Your vehicle is equipped with an Advanced Supplemental Restraint (Air Bag) System and lap/shoulder belts at both the driver and passenger seating position.

The indications of the system's presence are the letters "AIR BAG" embossed on the air bag pad cover in the steering wheel and the passenger's side front panel pad above the glove box.

The SRS consists of air bags installed under the pad covers in the center of the steering wheel and the passenger's side front panel above the glove box.

The purpose of the SRS is to provide the vehicle's driver and/or the front passenger with additional protection than that offered by the seat belt system alone in case of a frontal impact of sufficient severity. The SRS uses sensors to gather information about the driver's seat position, the driver's and front passenger's seat belt usage and impact severity.

The seat belt buckle sensors determine if the driver and front passenger's seat belts are fastened.

These sensors provide the ability to control the SRS deployment based on whether or not the seat belts are fastened, and how severe the impact is.

The advanced SRS offers the ability to control the air bag inflation with two levels. A first stage level is provided for moderate-severity impacts. A second stage level is provided for more severe impacts.

The passenger's front air bag is designed to help reduce the injury of children sitting close to the instrument panel in low speed collisions. However, children are safer if they are restraint in the rear seat.

According to the impact severity, seating position and seat belt usage, the SRSCM (SRS Control Module) controls the air bag inflation. Failure to properly wear seat belts can increase the risk or severity of injury in an accident.

Additionally, your vehicle is equipped with an occupant detection system in the front passenger's seat. The occupant detection system detects the presence of a passenger in the front passenger's seat and will turn off the front passenger's air bag under certain conditions. For more detail, see "Occupant detection system" in this section.

Do not place any objects that may cause magnetic fields near the front seat. These may cause a malfunction of the seat track position sensor.

Modification to the seat structure can cause the air bag to deploy at a different level than should be provided.

Manufacturers are required by government regulations to provide a contact point concerning modifications to the vehicle for persons with disabilities, which modifications may affect the vehicle's advanced air bag system. That contact is Kia's toll-free Customer Experience Department at 1-877-KIA-AUTO(1-877-542-2886).

However, Kia does not endorse nor will it support any changes to any part or structure of the vehicle that could affect the advanced air bag system, including the occupant detection system.

⚠ WARNING

- Replacement /Modifications

The front passenger seat, dashboard or door should not be replaced except by an authorized Kia dealer using original Kia parts designed for this vehicle and model. Any other such replacement or modification could adversely affect the operation of the occupant detection system and your advanced air bags.

Advanced air bags are combined with pre-tensioner seat belts to help provide enhanced occupant protection in frontal crashes. Front air bags are not intended to deploy in collisions in which sufficient protection can be provided by the pre-tensioner seat belt alone.

⚠ WARNING - SRS Wiring

Do not tamper with or disconnect SRS wiring or other components of the SRS system. Doing so could result in injury, due to accidental deployment of the air bags or by rendering the SRS inoperative.

Front air bags are not intended to deploy in side-impact, rear-impact or rollover crashes. However, when frontal deployment threshold is satisfied at side-impact, front air bags may deploy. In addition, front air bags will not deploy in frontal crashes below the deployment threshold.

Rear impact

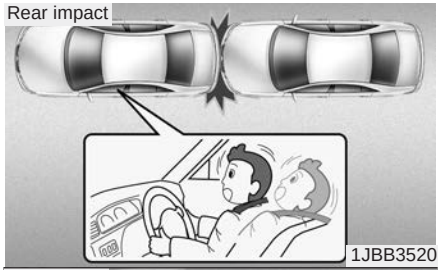

1JBB3520

Side impact

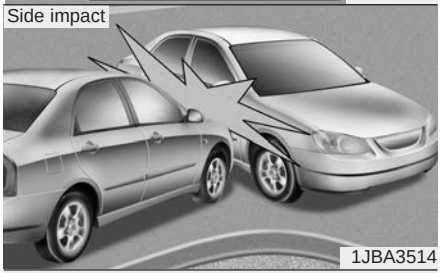

1JBA3514

Rollover

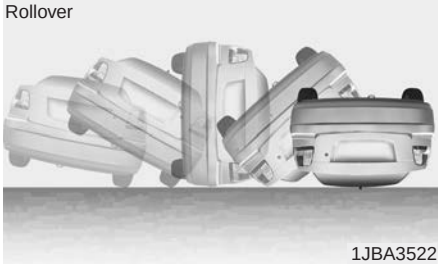

1JBA3522

⚠ WARNING - No attaching objects

No objects (such as crash pad cover, cellular phone holder, cup holder, perfume or stickers) should be placed over or near the air bag modules on the steering wheel, instrument panel, windshield glass, and the front passenger's panel above the glove box. Such objects could cause harm if the vehicle is in a crash severe enough to cause the air bags to deploy. Do not place any objects over the air bag or between the air bag and yourself.

⚠ WARNING

Never place or insert any object into any small opening near side airbag labels attached to the vehicle seats. When the air bag deploys, the object may affect the deployment and result in unexpected accident or bodily harm.

Side air bag

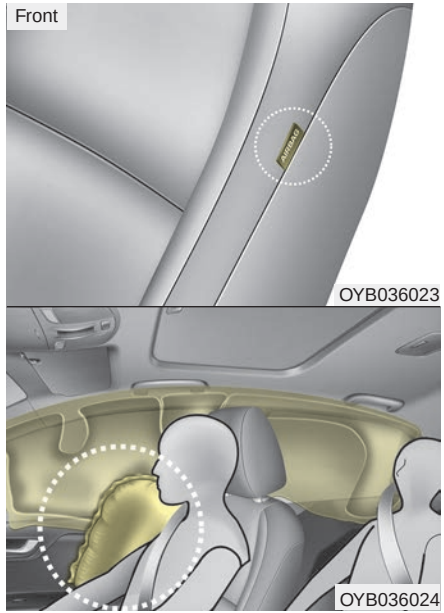

❊ The actual air bags in the vehicle may differ from the illustration.

Your vehicle is equipped with a side air bag in each front seat.

The purpose of the air bag is to provide the vehicle's driver and/or the front passenger with additional protection than that offered by the seat belt alone.

- The side air bags are designed to deploy during certain side-impact collisions, depending on the crash severity, angle, speed and point of impact. However, when side deployment threshold is satisfied at front-impact, side air bags may deploy.
- The side air bags may deploy on the side of the impact or on both sides.
- The side and/or curtain air bags on both sides of the vehicle will deploy if a rollover or possible rollover is detected.
- The side air bags are not designed to deploy in all side impact or rollover situations.

⚠ WARNING - Unexpected deployment

Avoid impact to the side air bag sensor when the ignition switch is ON to prevent unexpected deployment of the side air bag.

The side air bag is supplemental to the driver's and the passenger's seat belt systems and is not a substitute for them. Therefore your seat belts must be worn at all times while the vehicle is in operation.

For best protection from the side air bag system and to avoid being injured by the deploying side air bag, both front seat occupants should sit in an upright position with the seat belt properly fastened. The driver's hands should be placed on the steering wheel at the 9:00 and 3:00 positions. The passenger's arms and hands should be placed on their laps.

⚠ WARNING - Deployment

Do not install any accessories including seat covers, on the side or near the side air bag as this may affect the deployment of the side air bags.

If seat or seat cover is damaged, have the vehicle checked and repaired by an authorized Kia dealer. Inform that your vehicle is equipped with side air bags and an occupant detection system.

⚠ WARNING - Flying objects

Do not place any objects (an umbrella, bag, etc.) between the front door and the front seat. Such objects may become dangerous projectiles if the side air bag inflates.

⚠ WARNING - No attaching objects

- **Do not place any objects over the air bag or between the air bag and yourself. Also, do not attach any objects around the area the air bag inflates such as the door, side door glass, front and rear pillar.**
- **Do not place any objects between the door and the seat. They may become dangerous projectiles if the side air bag inflates.**
- **Do not install any accessories on the side or near the side air bags.**
- **Do not hang heavy items on the coat hooks for safety reasons.**
- **Never place or insert any object into any small opening near side airbag labels attached to the vehicle seats.**

  When the air bag deploys, the object may affect the deployment and result in unexpected accident or bodily harm.

Curtain air bag

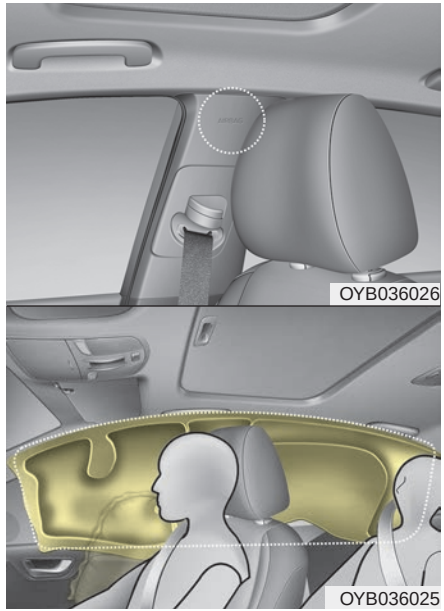

❊ The actual air bags in the vehicle may differ from the illustration.

Curtain air bags are located along both sides of the roof rails above the front and rear doors.

They are designed to help protect occupants in certain side impacts and to help prevent them from ejecting out of the vehicle as a result of a rollover, especially when the seatbelts are also in use.

- The curtain air bags are designed to deploy during certain side impact collisions, depending on the crash severity, angle, speed and point of impact. However, when side deployment threshold is satisfied at front-impact, side air bags may deploy.
- The curtain air bags may deploy on the side of the impact or on both sides.
- Also, the curtain air bags on both sides of the vehicle will deploy in certain rollover situations.
- The curtain air bags are not designed to deploy in all side impact or rollover situations.

Do not allow the passengers to lean their heads or bodies onto doors, put their arms on the doors, stretch their arms out of the window, or place objects between the doors and passengers when they are seated on seats equipped with side and/or curtain air bags.

✻ NOTICE

Never try to open or repair any components of the side curtain air bag system. This should only be done by an authorized Kia dealer.

⚠ WARNING - No attaching objects

- **Do not place any objects over the air bag. Also, do not attach any objects around the area the air bag inflates such as the door, side door glass, front and rear pillar, roof side rail.**
- **Do not hang hard or breakable objects on the clothes hanger.**

Why didn't my air bag go off in a collision? (Inflation and non-inflation conditions of the air bag)

There are many types of accidents in which the air bag would not be expected to provide additional protection.

These include rear impacts, second or third collisions in multiple impact accidents, as well as low speed impacts.

Air bag collision sensors

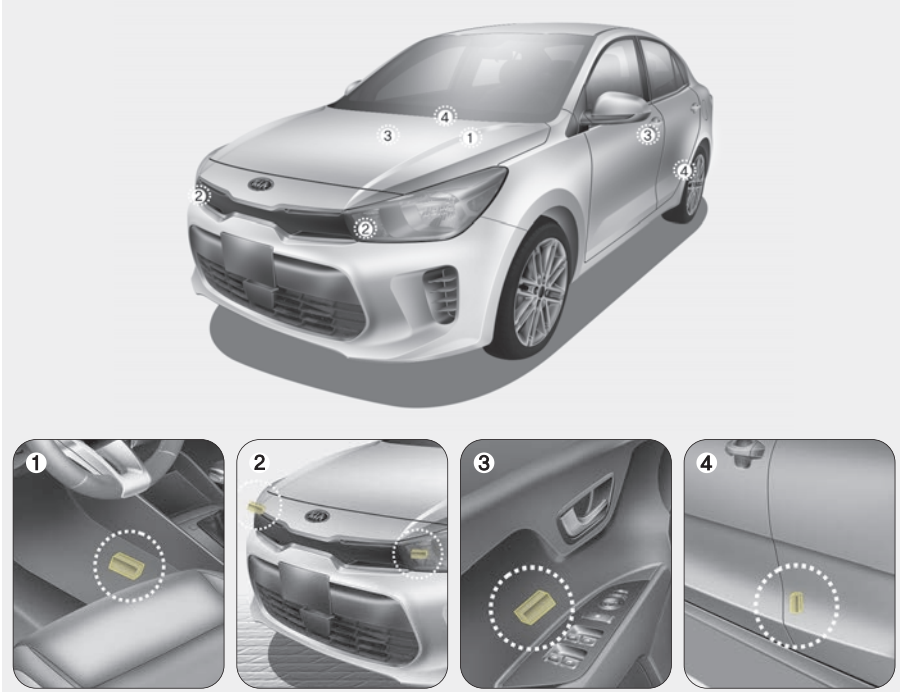

OSC037013N/OYB036032/OSC037024N/OYB036033/OYB036034

(1) SRS control module/ Rollover sensor

(2) Front impact sensor

(3) Side impact sensor

(4) Pressure side impact sensor

⚠ WARNING - Air bag sensors

- **Do not hit or allow any objects to impact the locations where air bag or sensors are installed.**

  This may cause unexpected air bag deployment, which could result in serious personal injury or death.
- **If the installation location or angle of the sensors is altered in any way, the air bags may deploy when they should not or they may not deploy when they should.**

  Therefore, do not try to perform maintenance on or around the air bag sensors. Have the vehicle checked and repaired by an authorized Kia dealer.

Problems may arise if the sensor installation angles are changed due to the deformation of the front bumper, body or B pillar where side collision sensors are installed. Have the vehicle checked and repaired by an authorized Kia dealer.

Installing aftermarket bumper guards or replacing a bumper with non-genuine parts may adversely affect your vehicle's collision and air bag deployment performance.

Air bag inflation conditions

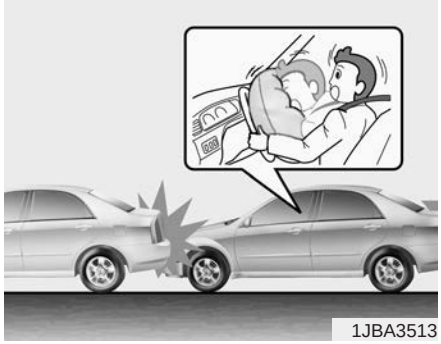

Front air bags

Front air bags are designed to inflate in a frontal collision depending on the severity of impact of the front collision.

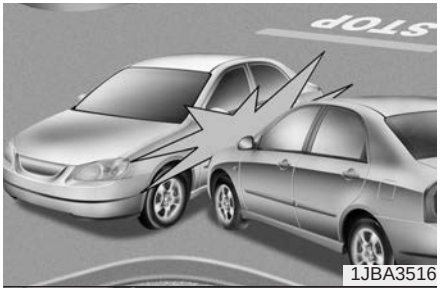

1JBA3516

OYDDSA2040

❊ The actual air bags in the vehicle may differ from the illustration.

Side air bags

Side air bags (side and/or curtain air bags) are designed to inflate when an impact is detected by side collision sensors depending on the severity of impact resulting from a side impact collision.

Also, the side and/or curtain air bags are designed to inflate when a rollover is detected by a rollover sensor.

Although the front air bags (driver's and front passenger's air bags) are designed to inflate in frontal collisions, they also may inflate in other types of collisions if the front impact sensors detect a sufficient frontal force in another type of impact. Side and curtain air bags are designed to inflate in certain side impact collisions. They may inflate in other types of collisions where a side force is detected by the sensors. Side air bag and/or curtain air bags may also inflate where rollover sensors indicate the possibility of a rollover occurring (even if none actually occurs) or in other situations, including when the vehicle is tilted while being towed.

Even where side and/or curtain air bags would not provide impact protection in a rollover, however, they will deploy to prevent ejection of occupants, especially those who are restrained with seat belts.

If the vehicle chassis is impacted by bumps or objects on unimproved roads or sidewalks, air bags may deploy. Drive carefully on unimproved roads or on surfaces not designed for vehicle traffic to prevent unintended air bag deployment.

Air bag non-inflation conditions

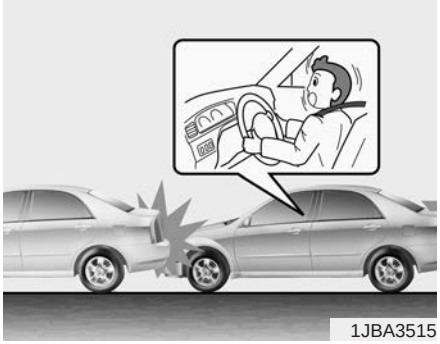
1JBA3515

- In certain low-speed collisions the air bags may not deploy. The air bags are designed not to deploy in such cases because they may not provide benefits beyond the protection of the seat belts in such collisions.

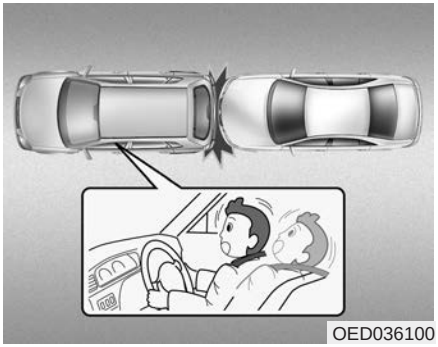
OED036100

- Air bags are not designed to inflate in rear collisions, because occupants are moved backward by the force of the impact. In this case, inflated air bags would not be able to provide any additional benefit.

1JBA3516

- Front air bags may not inflate in side impact collisions, because occupants move to the direction of the collision, and thus in side impacts, front air bag deployment would not provide additional occupant protection.

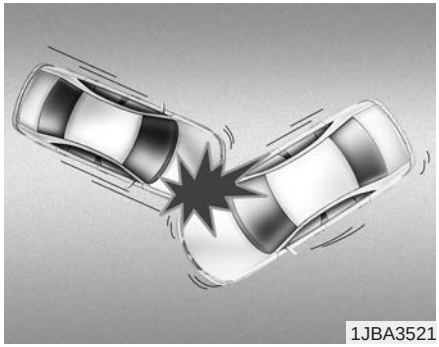
1JBA3521

- In a slant or angled collision, the force of impact may direct the occupants in a direction where the air bags would not be able to provide any additional benefit, and thus the sensors may not deploy any air bags.

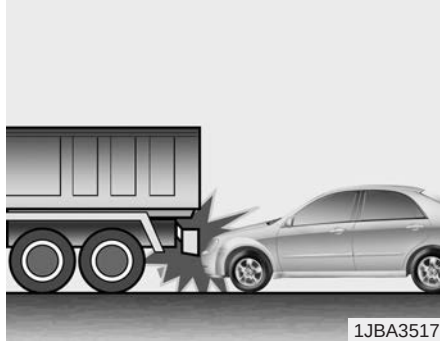
1JBA3517

- Just before impact, drivers often brake heavily. Such heavy braking lowers the front portion of the vehicle causing it to “ride” under a vehicle with a higher ground clearance. Air bags may not inflate in this “under-ride” situation because deceleration forces that are detected by sensors may be significantly replaced by such “under-ride” collisions.

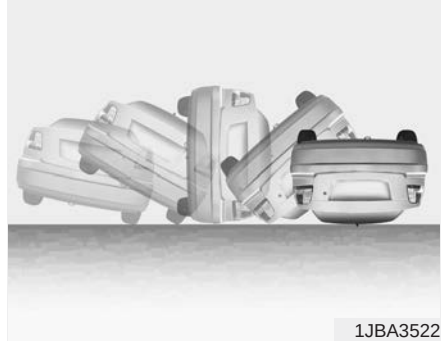
1JBA3522

- Front air bags may not inflate in rollover accidents because front air bag deployment would not provide additional occupant protection. However, side and curtain air bags may inflate when the vehicle is rolled over.

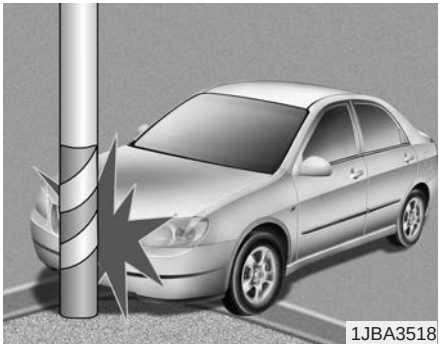

- Air bags may not inflate if the vehicle collides with objects such as utility poles or trees, where the point of impact is concentrated to one area and the full force of the impact is not delivered to the sensors.

SRS Care

The SRS is virtually maintenance-free and there are no parts you can safely service by yourself. If the SRS air bag warning light does not illuminate, or continuously remains on, have your vehicle immediately inspected by an authorized Kia dealer.

Any work on the SRS system, such as removing, installing, repairing, or any work on the steering wheel, the front passenger's panel, and front seats must be performed by an authorized Kia dealer. Improper handling of the SRS system may result in serious personal injury.

For cleaning the air bag pad covers, use only a soft, dry cloth or one which has been moistened with plain water. Solvents or cleaners could adversely affect the air bag covers and proper deployment of the system.

⚠ WARNING - Tampering with SRS

Do not tamper with or disconnect SRS wiring, or other components of the SRS system.

Doing so could result in the accidental inflation of the air bags or render the SRS inoperative.

⚠ WARNING - Towing Vehicle

Always have the Engine Start/Stop button in the OFF position when your vehicle is being towed. The side air bags may inflate if the vehicle is tilted such as when being towed because of the rollover sensors in the vehicle.

If components of the air bag system must be discarded, or if the vehicle must be scrapped, certain safety precautions must be observed. An authorized Kia dealer knows these precautions and can give you the necessary information. Failure to follow these precautions and procedures could increase the risk of personal injury.

Adding equipment to or modifying your air bag-equipped vehicle

If you modify your vehicle by changing your vehicle's frame, bumper system, front end or side sheet metal or ride height, this may affect the operation of your vehicle's air bag system

Air bag warning label

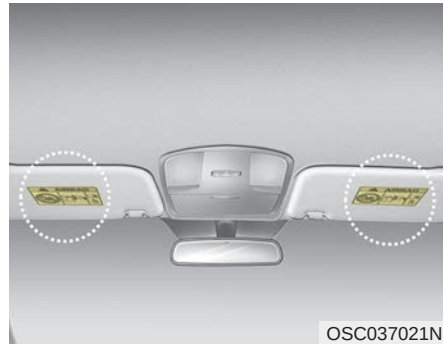

Air bag warning labels, some required by the Canada Motor Vehicle Safety Standards (CMVSS), are attached to the sunvisor to alert the driver and passengers of potential risks of the air bag system.

✻ NOTICE

Be sure to read all of the information about the air bags that are installed on your vehicle in this Owner`s Manual.

Features of your vehicle

Keys 4-4
- Record your key number 4-4
- Key operations 4-4

Smart key 4-6
- Smart key functions 4-6
- Smart key precautions 4-8

Remote keyless entry 4-10
- Remote keyless entry system operations 4-10
- Transmitter precautions 4-11
- Battery replacement 4-12
- Immobilizer system 4-14
- Limp home (override) procedure 4-15

Theft-alarm system 4-16
- Armed stage 4-16
- Theft-alarm stage 4-17
- Disarmed stage 4-18

Door locks 4-19
- Operating door locks from outside the vehicle 4-19
- Operating door locks from inside the vehicle 4-20
- Impact sensing door unlock system 4-22
- Auto door lock/unlock feature 4-22
- Speed sensing door lock system 4-22
- Child-protector rear door lock 4-22

Trunk (for 4 door) 4-24
- Opening the trunk 4-24
- Closing the trunk 4-24
- Emergency trunk safety release 4-25

Smart trunk (for 4 door) 4-26

Tailgate (for 5 door) 4-30
- Opening the tailgate 4-30
- Closing the tailgate 4-30
- Emergency tailgate safety release 4-31

Windows 4-33
- Power windows 4-34
- Manual windows 4-38

Hood 4-39
- Opening the hood 4-39
- Closing the hood 4-40
- Hood open warning 4-40

Fuel filler lid 4-42
- Opening the fuel filler lid 4-42
- Closing the fuel filler lid 4-42

Sunroof 4-45
- Sunroof open warning 4-46
- Sliding the sunroof 4-47
- Tilting the sunroof 4-48
- Sunshade 4-49
- Resetting the sunroof 4-49

Steering wheel 4-51
• Electric Power Steering (EPS) 4-51
• Tilt and telescopic steering 4-52
• Horn 4-52
• Heated steering wheel 4-53
Mirrors 4-54
• Inside rearview mirror 4-54
• Outside rearview mirror 4-54
Instrument cluster 4-57
• Instrument Cluster Control 4-58
• LCD window control 4-58
• Gauges 4-59
• Transmission shift indicator 4-62
LCD windows 4-64
• Over view 4-64
• Trip information (Trip computer) 4-64
• LCD modes (for type B cluster) 4-69
• Service mode 4-70
• User settings mode (for type B cluster) 4-70
Warning and indicator lights 4-79
• Warning lights 4-79
• Indicator lights 4-87
Rear view monitor 4-91
• Rear view monitor 4-91
Lighting 4-92
• Battery saver function 4-92
• Headlight escort function 4-92
• Headlight welcome function 4-92
• Daytime running light 4-93
• Lighting control 4-93
• High beam operation 4-95
• Turn signals and lane change signals 4-96
• Front fog light 4-97
Wipers and washers 4-98
• Windshield wipers 4-99
• Windshield washers (front) 4-100
• Rear window wiper and washer switch
(for 5 door) 4-102
Interior light 4-103
• Automatic turn off function 4-103
• Map lamp 4-103
• Room lamp 4-104
• Luggage room lamp 4-106
• Glove box lamp 4-106
• Vanity mirror lamp 4-107
Defroster 4-108
• Rear window defroster 4-108

Manual climate control system 4-109
• Heating and air conditioning 4-110
• System operation 4-115
• Climate control air filter 4-117
• Checking the amount of air conditioner refrigerant and compressor lubricant 4-118
Automatic climate control system. 4-119
• Automatic heating and air conditioning 4-120
• Manual heating and air conditioning 4-121
• System operation 4-126
Windshield defrosting and defogging. 4-128
• Manual climate control system 4-128
• Automatic climate control system 4-129
• Defogging logic. 4-130
Storage compartment. 4-133
• Center console storage 4-133
• Glove box 4-133
• Sunglass holder 4-134
• Luggage net holder 4-134
Interior features 4-136
• Cup holder 4-136
• Sunvisor 4-136
• Seat warmer 4-137
• Power outlet 4-138
• USB charger. 4-139
• Clothes hanger 4-140
• Floor mat anchor(s). 4-141
• Shopping bag holder 4-141
• Covering shelf (for 5 door) 4-142

KEYS

Record your key number

The key code number is stamped on the key code tag attached to the key set. Should you lose your keys, this number will enable an authorized Kia dealer to duplicate the keys easily. Remove the key code tag and store it in a safe place. Also, record the key code number and keep it in a safe and handy place, but not in the vehicle.

⚠ WARNING - Aftermarket keys

Use only Kia original parts for the ignition key in your vehicle. If an aftermarket key is used, the ignition switch may not return to ON after START. If this happens, the starter will continue to operate causing possible fire due to excessive current in the wiring.

Key operations

Folding key

■ Folding key

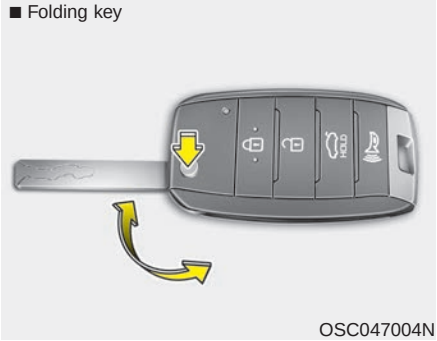

OSC047004N

To unfold the key, press the release button then the key will unfold automatically.

To fold the key, fold the key manually while pressing the release button

⚠ CAUTION - Key button operation

Do not fold the key without pressing the release button. This may damage the key.

Smart key

■ Smart key

OYDDCO2002

To remove the mechanical key, press and hold the release button and remove the mechanical key.

To reinstall the mechanical key, put the key into the hole and push it until a click sound is heard.

⚠ WARNING - Ignition key or smart key

Never leave the keys in your vehicle with unsupervised children. Leaving children unattended in a vehicle with a manual ignition key or a smart key is dangerous.

Children copy adults and they could place the key in the ignition switch or press the start button. The key would enable children to operate power windows or other controls, or even make the vehicle move, which could result in serious bodily injury or death.

SMART KEY (IF EQUIPPED)

Smart key functions

OYDDCO2007

With a smart key, you can lock or unlock a door and even start the engine without inserting the key.

The functions of the buttons on a smart key are similar to the remote keyless entry. (Refer to the “Remote keyless entry” in this chapter.)

Locking

OYB046010

Pressing the button of the front outside door handles with all doors closed and any door unlocked, locks all the doors (and hood, trunk/tailgate).

The hazard warning lights will blink and the chime will sound once to indicate that all doors are locked. The button will only operate when the smart key is within 0.7 ~ 1m (28 ~ 40 in.) from the outside door handle. If you want to make sure that a door has locked or not, you should check the door lock button inside the vehicle or pull the outside door handle.

In some instances, when the outside door button is selected, the doors will not lock and an audible chime will sound for 3 seconds if any of the following occurs:

- The smart key is in the vehicle.
- The ignition switch is in the ACC or ON position.
- Any door except the trunk/tailgate is opened.

Unlocking

Pressing the button of the driver's outside door handle with all doors closed and locked, unlocks the driver's door. The hazard warning lights will blink and the chime will sound twice to indicate that the driver's door is unlocked.

Pressing the button in the front passenger's outside door handle with all doors closed and locked, unlocks all the doors. The hazard warning lights will blink and the chime will sound twice to indicate that all doors are unlocked. The button will only operate when the smart key is within 0.7 ~ 1 m (28 ~ 40 in.) from the outside door handle.

Start-up

You can start the engine without inserting the key. For detailed information refer to “Starting the engine with a smart key” in chapter 6.

Opening the trunk lid (for 4 door)

- When you have the smart key within 70 ~ 100 cm (28 ~ 40 in) from the exterior trunk handle and press the handle, the trunk lid will open.
- When you open and close the trunk lid with all the doors closed, it will lock again (the warning light will blink once).
- When you close the trunk lid with the smart key inside the trunk, the alarm goes off for about 5 seconds. At this time, the trunk lid will not be locked, so you should press the button to open it again.

Unlocking the tailgate (for 5 door)

- When the smart key is within 70 ~ 100 cm (28 ~ 40 in) from the exterior tailgate handle, pressing the handle will open the tailgate.
- When you open and close the tailgate with all the doors closed, it will lock again (the warning light will blink once).
- When you close the tailgate with the smart key inside the tailgate, the smart key reminder will unlock all the doors. At this time, the tailgate will not be locked, so you should press the button to open it again.

Smart key precautions

- If you lose your smart key, you will not be able to start the engine. Tow the vehicle, if necessary, and contact an authorized Kia dealer.
- A maximum of 2 smart keys can be registered to a single vehicle. If you lose a smart key, you should immediately take the vehicle and key to your authorized Kia dealer to protect it from potential theft.
- The smart key will not work if any of following occurs:
  - The smart key is close to a radio transmitter such as a radio station or an airport which can interfere with normal operation of the smart key.
  - The smart key is near a mobile two way radio system or a cellular phone.
  - Another vehicle's smart key is being operated close to your vehicle.

  When the smart key does not work correctly, open and close the door with the mechanical key. If you have a problem with the smart key, contact an authorized Kia dealer.
- If the smart key is in close proximity to your cell phone or smart phone, the signal from the smart key could be blocked by normal operation of your cell phone or smart phone.

  This is especially important when the phone is active such as making calls, receiving calls, text messaging, and/or sending/receiving emails. Avoid placing the smart key and your cell phone or smart phone in the same pants or jacket pocket and maintain adequate distance between the two devices.
- Always carry your smart key when you leave the car. An unattended smart key close to the vehicle can cause the vehicle battery to be discharged.
- Internal circuit damage may occur when the key comes into contact with moisture (beverage, water etc.) or heat. In this case, warranty repair is not available. Damage to the smart key due to exposure to liquids or heat is not covered by the manufacturer's vehicle warranty.

⚠ **CAUTION - Transmitter**

Keep the smart key away from water or any liquid as it can become damaged and not function properly.

This device complies with Industry Canada licence-exempt RSS standard(s).

Operation is subject to the following two conditions:

(1) This device may not cause interference, and

(2) This device must accept any interference, including interference that may cause undesired operation of the device.

✻ NOTICE

Changes or modifications not expressly approved by the party responsible for compliance could void the user's authority to operate the equipment. If the keyless entry system is inoperative due to changes or modifications not expressly approved by the party responsible for compliance, it will not be covered by your manufacturer's vehicle warranty.

REMOTE KEYLESS ENTRY (IF EQUIPPED)

Remote keyless entry system operations

■ Type A

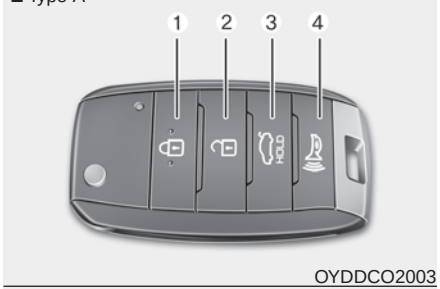

OYDDCO2003

■ Type B

OSC047005N

Lock (1)

All doors (and hood, trunk/tailgate) are locked if the lock button is pressed. If all doors (and hood, trunk/tailgate) are closed, the hazard warning lights will blink and the chime will sound once to indicate that all doors (and hood, trunk/tailgate) are locked.

Also, if the lock button is pressed once more within 4 seconds, the hazard warning lights will blink and the chime will sound once to confirm that the door is locked. (if equipped)

However, if any door remains open, the hazard warning lights (and/or the chime) will not operate. But if all doors are closed after the lock button is pressed, the hazard warning lights will blink once.

Unlock (2)

The driver's door is unlocked if the unlock button is pressed once. The hazard warning lights will blink twice and the chime will sound twice to indicate that the driver’s door is unlocked.

All doors are unlocked if the unlock button is pressed once more within 4 seconds. The hazard warning lights will blink (for smart key, the chime also sounds) twice again to indicate that all doors are unlocked. After pressing this button, the doors will lock automatically unless you open any door within 30 seconds.

If you attempt to lock or unlock the door by pressing the door lock/unlock button in any of the following states, the door will not be locked or unlocked.

- When you want to lock or unlock the door in the ACC or ON state.
- When you want to lock a door in a car with one or more doors open.

Depending on the vehicle, the driver can turn off or set the TWO PRESS UNLOCK setting function.

✻ NOTICE

If the keyless entry system is inoperative due to exposure to water or liquids, it will not be covered by your manufacturer's vehicle warranty.

Trunk open (3)

The trunk is opened if the button is pressed for more than 1 second.

Tailgate unlock (3)

The tailgate is unlocked if the button is pressed for more than 1 second.

However, after pressing this button, the tailgate will lock automatically unless you open the tailgate within 30 seconds.

Also, once the tailgate is opened and then closed, the tailgate will lock automatically.

Alarm (4)

The horn sounds and the hazard warning lights blink for about 30 seconds if this button is pressed for more than 0.5 seconds. To stop the horn and lights, press any button on the transmitter.

Transmitter precautions

The transmitter (or smart key) will not work if any of following occurs:

- The ignition key is in the ignition switch.
- You exceed the operating distance limit (about 30 m [90 feet]).
- The battery in the transmitter (or smart key) is weak.
- Other vehicles or objects may be blocking the signal.
- The weather is extremely cold.
- The transmitter (or smart key) is close to a radio transmitter such as a radio station or an airport which can interfere with normal operation of the transmitter.

When the transmitter (or smart key) does not work properly, open and close the door with the ignition key. If you have a problem with the transmitter (or smart key), contact an authorized Kia dealer.

- If the transmitter is in close proximity to your cell phone or smart phone, the signal from the transmitter could be blocked by normal operation of your cell phone or smart phone. This is especially important when the phone is active such as making calls, receiving calls, text messaging, and/or sending/receiving emails.

  Avoid placing the transmitter and your cell phone or smart phone in the same pants or jacket pocket and maintain adequate distance between the two devices.

This device complies with Industry Canada licence-exempt RSS standard(s).

Operation is subject to the following two conditions:

(1) This device may not cause interference, and

(2) This device must accept any interference, including interference that may cause undesired operation of the device.

✻ NOTICE

Changes or modifications not expressly approved by the party responsible for compliance could void the user's authority to operate the equipment. If the keyless entry system is inoperative due to changes or modifications not expressly approved by the party responsible for compliance, it will not be covered by your manufacturer's vehicle warranty.

Battery replacement

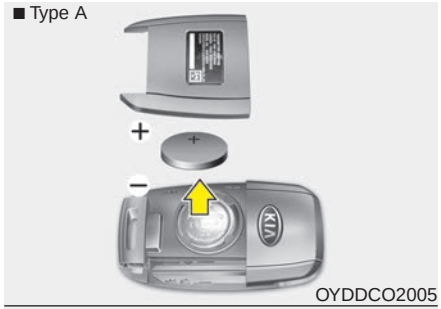

OYDDCO2005

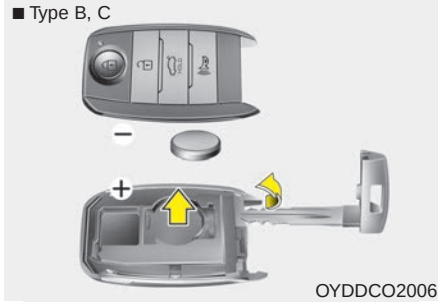

OYDDCO2006

A battery should last for several years, but if the transmitter or smart key is not working properly, try replacing the battery with a new one. If you are unsure how to use or replace the battery, contact an authorized Kia dealer.

Type A

1. Pry open the transmitter cover.
2. Replace the battery with a new battery (CR2032). When replacing the battery, make sure the battery position is correct.
3. Install the battery in the reverse order of removal.

Type B

1. Remove the mechanical key.
2. Pry open the rear cover.
3. Replace the battery with a new battery (CR2032). When replacing the battery, make sure the battery position is correct.
4. Install the battery in the reverse order of removal.

- The transmitter or smart key is designed to give you years of trouble-free use, however it can malfunction if exposed to moisture or static electricity. If you are unsure how to use or replace the battery, contact an authorized Kia dealer.
- Using the wrong battery can cause the transmitter or smart key to malfunction. Be sure to use the correct battery.
- An inappropriately disposed battery can be harmful to the environment and human health. Dispose the battery according to your local law(s) or regulation.

⚠ CAUTION - Transmitter damage

The transmitter or smart key can malfunction if dropped, exposed to moisture, static electricity, heat or direct sunlight.

⚠ IC WARNING

This device complies with Industry Canada licence-exempt RSS standard(s).

Operation is subject to the following two conditions: (1) this device may not cause interference, and (2) this device must accept any interference, including interference that may cause undesired operation of the device.

Immobilizer system

Your vehicle may be equipped with an electronic engine immobilizer system to reduce the risk of unauthorized vehicle use.

Your immobilizer system is comprised of a small transponder in the ignition key and electronic devices inside the vehicle.

With the immobilizer system, whenever you insert your ignition key into the ignition switch and turn it to ON, it checks and determines and verifies that the ignition key is valid.

If the key is determined to be valid, the engine will start.

If the key is determined to be invalid, the engine will not start.

To deactivate the immobilizer system:

Insert the ignition key into the key cylinder and turn it to the ON position.

To activate the immobilizer system:

Turn the ignition key to the OFF position. The immobilizer system activates automatically. Without a valid ignition key for your vehicle, the engine will not start.

Your Immobilizer password is a customer unique password and should be kept confidential. Do not leave this number anywhere in your vehicle.

✻ NOTICE

Keep each key separately in order to avoid a starting malfunction.

Do not put metal accessories near the ignition switch.

Metal accessories may interrupt the transponder signal and may prevent the engine from being started.

If you need additional keys or lose your keys, consult an authorized Kia dealer.

⚠ CAUTION - Immobilizer damage

Do not expose your immobilizer system to moisture, static electricity or rough handling. This may damage your immobilizer.

⚠ CAUTION - Immobilizer alterations

Do not change, alter or adjust the immobilizer system because it could cause the immobilizer system to malfunction.

This device complies with Industry Canada licence-exempt RSS standard(s).

Operation is subject to the following two conditions:

(1) This device may not cause interference, and

(2) This device must accept any interference, including interference that may cause undesired operation of the device.

✻ NOTICE

Changes or modifications not expressly approved by the party responsible for compliance could void the user's authority to operate the equipment.

Limp home (override) procedure

When you turn the ignition switch to the ON position, if the immobilizer indicator ( ) goes off after blinking 5 times, your transponder equipped in the ignition key is out of order. You cannot start the engine without the limp home procedure. To start the engine, you have to input your password by using the ignition switch. Your password is only available from an authorized Kia dealership. Contact an authorized dealer for more information.

The following procedure is how to input your password of “2345” as an example.

1. Turn the ignition switch to the ON position. The immobilizer indicator ( ) will blink 5 times and go off indicating the beginning of the limp home procedure.
2. Turn the ignition switch to the ACC position.
3. To enter the first digit (in this example “2”), turn the ignition switch to the ON and ACC position twice. Perform the same procedure for the next digits between 3 seconds and 10 seconds (for example, for “3”, turn the ignition ON and ACC 3 times).
4. If all of the digits have been input successfully, you have to start the engine within 30 seconds. If you attempt to start the engine after 30 seconds, the engine will not start and you will have to input your password again.

After performing the limp home procedure, you have to see an authorized Kia dealer immediately to inspect and repair your ignition key or immobilizer system.

THEFT-ALARM SYSTEM (IF EQUIPPED)

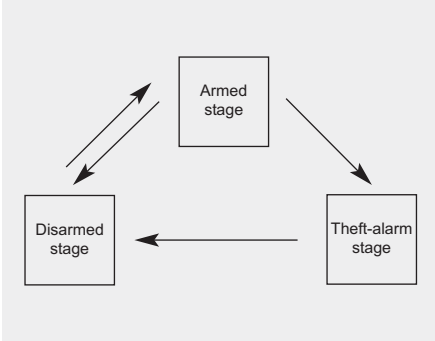

This system is designed to provide protection from unauthorized entry into the vehicle. This system is operated in three stages: the first is the "Armed" stage, the second is the "Theft-alarm" stage, and the third is the "Disarmed" stage. If triggered, the system provides an audible alarm with blinking of the hazard warning lights.

Armed stage

Using the smart key

Park the vehicle and stop the engine. Arm the system as described below.

1. Turn off the engine.
2. Make sure that all doors (and tailgate) and the engine hood are closed and latched.
3. • Lock the doors by pressing the button of the front outside door handle with the smart key in your possession.

   After completion of the steps above, the hazard warning lights operate once to indicate that the system is armed.

   If any door remains open, the doors won't lock and the chime will sound for 3 seconds. Close the door and try again to lock the doors.

   If tailgate or engine hood remains open, the hazard warning lights won't operate and theft-alarm will not arm. After this, if the tailgate and engine hood are closed, the hazard warning lights will blink once.

   • Lock the doors by pressing the lock button on the smart key.

   After completion of the steps above, the hazard warning lights will operate once to indicate that the system is armed.

   If any door (and trunk/tailgate) or engine hood remains open, the hazard warning lights won't operate and theft-alarm will not arm. After this, if all doors (and trunk/tailgate) and engine hood are closed, the hazard warning lights blink once.

Using the transmitter

Park the vehicle and stop the engine. Arm the system as described below.

1. Turn off the engine and remove the ignition key from the ignition switch.
2. Make sure that all doors (and tailgate), the engine hood are closed and latched.
3. Lock the doors by pressing the lock button on the transmitter.

   After completion of the steps above, the hazard warning lights will blink once to indicate that the system is armed.

   If any door (and tailgate) or engine hood remains open, the hazard warning lights won't operate and theft-alarm will not arm. After this, if all doors (and tailgate) and engine hood are closed, the hazard warning lights blink once.

- **Do not arm the system until all passengers have left the vehicle. If the system is armed while a passenger(s) remains in the vehicle, the alarm may be activated when the remaining passenger(s) leave the vehicle. If any door, tailgate or engine hood is opened within 30 seconds after entering the armed stage, the system is disarmed to prevent unnecessary alarm.**

Theft-alarm stage

The alarm will be activated if any of the following occurs while the system is armed.

- A front or rear door is opened without using the mechanical key or transmitter (or smart key).
- The trunk/tailgate is opened without using the mechanical key or transmitter (or smart key).
- The engine hood is opened.

The horn will sound and the hazard warning lights will blink continuously for approximately 27 seconds. To turn off the system, unlock the doors with the transmitter (or smart key).

Disarmed stage

The system will be disarmed when:

Transmitter

- The door unlock button is pressed.
- The engine is started. (within 3 seconds)
- The ignition switch is in the "ON" position for 30 seconds or more.

Smart key

- The door unlock button is pressed.
- The button of the front outside door is pressed while carrying the smart key.
- The engine is started. (within 3 seconds)

After the doors are unlocked, the hazard warning lights will blink twice to indicate that the system is disarmed.

After pressing the unlock button, if any door (or trunk/tailgate) is not opened within 30 seconds, the system will be rearmed.

✻ NOTICE

- **Avoid trying to start the engine while the alarm is activated. The vehicle starting motor is disabled during the theft-alarm stage.**
  If the system is not disarmed with the transmitter, insert the key into the ignition switch, turn the ignition switch to the ON position and wait for 30 seconds. Then the system will be disarmed.
- **If you lose your keys, consult your authorized Kia dealer.**

DOOR LOCKS

Operating door locks from outside the vehicle

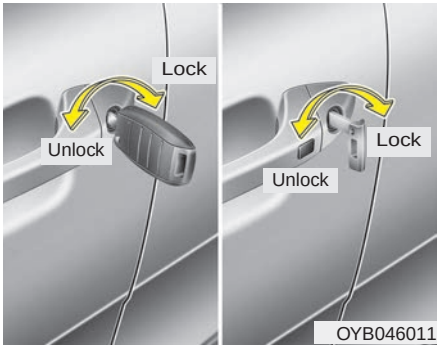

- Turn the key toward the rear of the vehicle to lock and toward the front of the vehicle to unlock.
- If you lock/unlock the door with a key, all vehicle doors will lock/unlock automatically.
- From the driver's door, turn the key toward the front of the vehicle once to unlock the driver's door and once more within 4 seconds to unlock all doors.
- Doors can also be locked and unlocked with the transmitter key (or smart key). (if equipped)
- Once the doors are unlocked, they may be opened by pulling the door handle.
- When closing the door, push the door by hand. Make sure the doors are closed securely.

✻ NOTICE

- **In cold and wet climates, door lock and door mechanisms may not work properly due to freezing conditions.**
- **If the door is locked/unlocked multiple times in rapid succession with either the vehicle key or door lock switch, the system may stop operating temporarily in order to protect the circuit and prevent damage to system components.**

⚠ WARNING

- **Securely close your door before you begin driving. Failure to fully close your door may cause it to open during vehicle operation.**
- **Keep your body out of the way of the closing door to prevent injuries.**

⚠ CAUTION

Do not open and close the door repeatedly if unnecessary or with excessive force. Such action can damage the vehicle door.

⚠ WARNING

If adult passengers must remain in the vehicle while it is very hot or cold outside, there is risk of injuries or danger to life. Do not lock the vehicle from the outside when there are adult passengers in the vehicle.

Operating door locks from inside the vehicle

With the door lock button

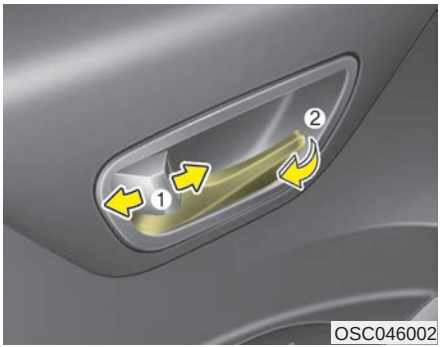

- To unlock a door, pull the door lock button (1) to the “Unlock” position. The red mark on the button will be visible.
- To lock a door, push the door lock button (1) to the “Lock” position. If the door is locked properly, the red mark on the door lock button will not show.
- To open a door, pull the door handle (2) outward.
- If the inner door handle of the front door is pulled when the door lock button is in the lock position, the button will unlock and the door will open.
- Front doors cannot be locked if the ignition key is in the ignition switch (or if the smart key is in the vehicle) and any front door is opened.

If a power door lock ever fails to function while you are in the vehicle, try one or more of the following techniques to exit:

- Operate the door unlock feature repeatedly (both electronic and manual) while simultaneously pulling on the door handle.
- Operate the other door locks and handles, front and rear.
- Lower a front window and use the key to unlock the door from outside.

With central door lock switch (if equipped)

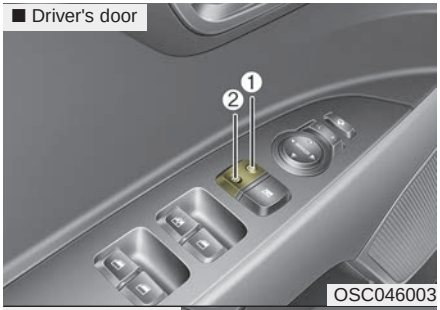

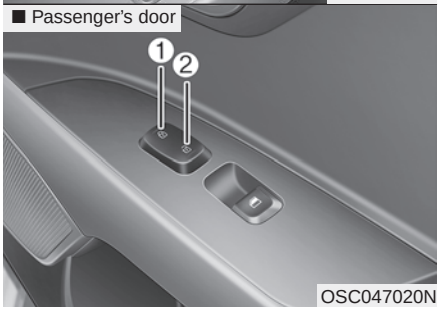

Operate by pressing the central door lock switch.

- Press the switch to the “Lock” position (1), all vehicle doors will lock.
- Press the switch to the “Unlock” position (2), all vehicle doors will unlock.
- If the key is in the ignition switch (or if the smart key is in the vehicle) and any front door is opened, the doors will not lock when the “Lock” position (1) of the central door lock switch is pressed.

⚠ WARNING - Doors

- **The doors should always be fully closed and locked while the vehicle is in motion to prevent accidental opening of the door.**
- **Be careful when opening doors and watch for vehicles, motorcycles, bicycles or pedestrians approaching the vehicle in the path of the door. Opening a door when something is approaching can cause damage or injury.**

⚠ WARNING - Unattended children/animals

Never leave children or animals unattended in your vehicle.

An enclosed vehicle can become extremely hot, causing death or severe injury to unattended children or animals who cannot escape the vehicle.

Impact sensing door unlock system (if equipped)

All doors will automatically unlock when an impact causes the air bags to deploy.

Auto door lock/unlock feature (if equipped)

- All doors will automatically lock when the transmission shift lever is shifted out of P (Park).
- All doors will automatically unlock when the transmission shift lever is shifted into P (Park).

Speed sensing door lock system (if equipped)

All doors will be automatically locked after the vehicle speed exceeds 9 mph. And all doors will be automatically unlocked when you turn the engine off or when you remove the ignition key.

An authorized Kia dealer can activate or deactivate some auto door lock/unlock features as follows;

- Auto door unlock by using the driver's door lock button
- Auto door lock/unlock by shifting the transmission shift lever out of P (Park) or into P (Park)
- Auto door unlock when the ignition key is removed from the ignition switch (for smart key, when the ENGINE START/STOP button is turned to the OFF position)

If you want to activate or deactivate some door lock/unlock feature, consult an authorized Kia dealer.

Child-protector rear door lock

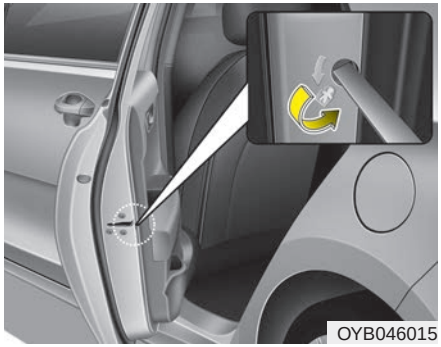

The child safety lock is provided to help prevent children from accidentally opening the rear doors from inside the vehicle. The rear door safety locks should be used whenever children are in the vehicle.

1. Open the rear door.
2. Insert a key (or screwdriver) into the hole and turn it to the lock ( ) position. the child safety lock located on the rear edge of the door to the lock position. When the child safety lock is in the lock position, rear door will not open even when the inner door handle is pulled.

3. Close the rear door.

To open the rear door, pull the outside door handle.

Even though the doors may be unlocked, the rear door will not open by pulling the inner door handle until the rear door child safety lock is unlocked.

⚠ WARNING - Rear door locks

Use the rear door safety locks whenever children are in the vehicle. If a child accidently opens the rear doors while the vehicle is motion, he can fall out.

TRUNK (FOR 4 DOOR)

Opening the trunk

OSC047021N

To open the trunk from inside the vehicle, pull the trunk lid release lever.

Once the trunk is opened and then closed, the trunk locks automatically.

✻ NOTICE

In cold and wet climates, trunk lock and trunk mechanisms may not work properly due to freezing conditions.

⚠ WARNING

The trunk swings upward. Make sure no objects or people are near the rear of the vehicle when opening the trunk.

⚠ CAUTION

Make certain that you close the trunk before driving your vehicle. Possible damage may occur to attached hardware if the trunk is not closed prior to driving.

Closing the trunk

To close, lower the trunk lid, then press down on it until it locks. To be sure the trunk lid is securely fastened, always check by trying to pull it up again.

⚠ WARNING - Exhaust Fumes

The trunk lid should always be kept completely closed while the vehicle is in motion. If it is left open or ajar, poisonous exhaust gases may enter the car and serious illness or death may result.

⚠ WARNING

No one should be allowed to occupy the trunk at any time. The trunk is a very dangerous location in the event of a crash.

Emergency trunk safety release

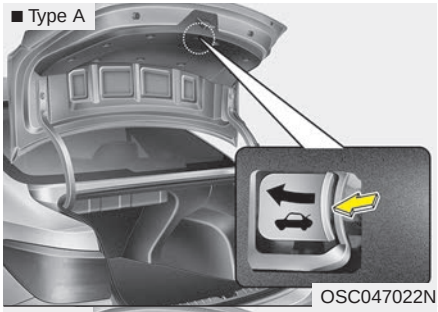

OSC047022N

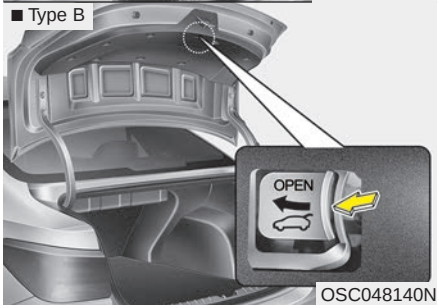

OSC048140N

Your vehicle is equipped with an emergency trunk release lever located inside the trunk. If someone is inadvertently locked in the trunk, moving the handle in the direction of the arrow will release the trunk latch mechanism and open the trunk.

No one should be allowed to occupy the trunk at any time. The trunk is a very dangerous location in the event of a crash.

Use the release lever for emergencies only. Use extreme caution, especially while the vehicle is in motion.

SMART TRUNK (FOR 4 DOOR, IF EQUIPPED)

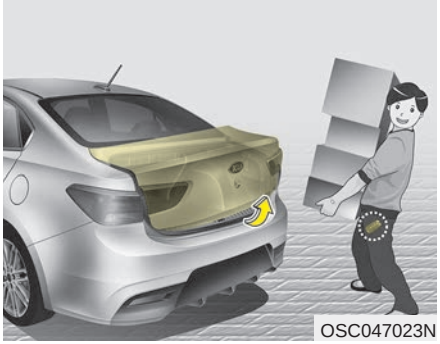
OSC047023N

On a vehicle equipped with a smart key, the trunk can be opened with no-touch activation using the Smart Trunk system.

How to use the Smart Trunk

The trunk can be opened with no-touch activation if the conditions below are satisfied:

- After 15 seconds when all doors are closed and locked
- The smart key is in the detecting area for more than 3 seconds.

✻ NOTICE

- **The Smart Trunk does not operate when:**
  - **The smart key is detected within 15 seconds after the doors are closed and locked, and is continuously detected.**
  - **The smart key is detected within 15 seconds after the doors are closed and locked, and 1.5 m (60 inches) from the front door handles. (for vehicles equipped with Welcome Light)**
- **When smart key is left in the range of detection within 15 seconds after the doors are closed and locked, the function will automatically turn off after 10 minutes.**
  - **A door is not locked or closed.**
  - **The smart key is in the vehicle.**

1. Setting

To activate the Smart Trunk,

(1) Change the LCD modes to User setting mode

(2) Select the Door mode

(3) Check the Smart Trunk.

✻For more details, refer to “LCD Windows” in this chapter

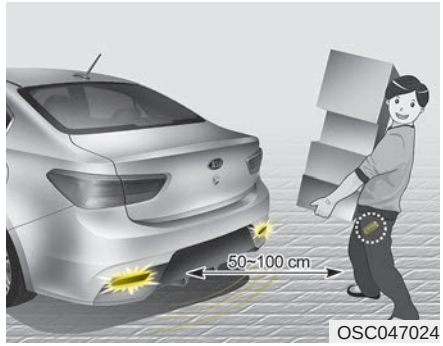

OSC047024

2. Detect and Alert

If you are positioned in the detecting area (50 ~ 100 cm (20 ~ 40 inches) behind the vehicle) carrying a smart key, the hazard warning lights will blink and chime will sound for about 3 seconds to alert you the smart key has been detected and the trunk will open.

✻ NOTICE

Do not approach the detecting area if you do not want the trunk to open. If you have unintentionally entered the detecting area and the hazard warning lights and chime starts to operate, leave the detecting area with the smart key. The trunk will stay closed.

OSC047025N

3. Automatic opening

The hazard warning lights will blink and chime will sound 2 times and then the trunk will open.

⚠ WARNING

Make sure objects in the rear cargo area do not come out when opening the trunk as this could cause serious injury.

✻ NOTICE

The key should be kept out of reach of children. Children may inadvertently open the Smart Trunk while playing around the rear area of the vehicle.

- Make certain that you close the trunk before driving your vehicle.
- Make sure there are no people or objects around the trunkbefore opening or closing the trunk.
- Make sure to deactivate the Smart trunk function when washing your vehicle.

  Otherwise, the trunk may open inadvertently.

How to deactivate the Smart Trunk function using the smart key

OSC047005N

1. Door lock
2. Door unlock
3. Trunk open
4. Alarm

If you press any button of the smart key during the Detect and Alert stage, the Smart Trunk function will be deactivated.

Make sure to be aware of how to deactivate the Smart Trunk function for emergency situations.

✻ NOTICE

- **If you press the door unlock button (2), the Smart Trunk function will be deactivated temporarily. But, if you do not open any door for 30 seconds, the smart trunk function will be activated again.**
- **If you press the trunk open button (3) for more than 1 second, the trunk opens.**
- **If you press the door lock button (1) or trunk open button (3) when the Smart Trunk function is not in the Detect and Alert stage, the smart trunk function will not be deactivated.**
- **In case you have deactivated the Smart Trunk function by pressing the smart key button or opening a door, the smart trunk function can be activated again by closing and locking all doors.**

Detecting area

OSC047026

- The Smart Trunk operates with a welcome alert if the smart key is detected within 50 ~ 100 cm (20 ~ 40 inches) from the trunk.
- The alert stops at once if the smart key is positioned outside the detecting area during the Detect and Alert stage.

✻ NOTICE

- **The Smart Trunk function will not work if any of the following occurs:**
  - **The smart key is close to a radio transmitter such as a radio station or an airport which can interfere with normal operation of the transmitter.**
  - **The smart key is near a mobile two way radio system or a cellular phone.**
  - **Another vehicle's smart key is being operated close to your vehicle.**
- **The detecting range may decrease or increase when :**
  - **One side of the vehicle is raised to replace a tire or to inspect the vehicle.**
  - **The vehicle is parked on a slope or unpaved road, etc.**

TAILGATE (FOR 5 DOOR)

Opening the tailgate

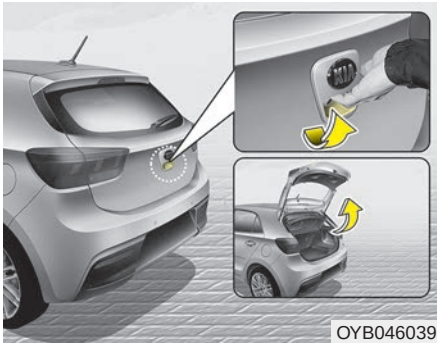
OYB046039

- The tailgate is locked or unlocked when all doors are locked or unlocked with the transmitter (or smart key) or central door lock switch.
- If unlocked, the tailgate can be opened by pressing the handle and pulling it up.
- When all doors are locked, the tailgate unlock button on the smart key is pressed for more than 1 second, only the tailgate is unlocked. Once the tailgate is opened and then closed, the tailgate is locked automatically.

❈ There is no key hole.

✻ NOTICE

In cold and wet climates, tailgate lock and tailgate mechanisms may not work properly due to freezing conditions.

⚠ WARNING

The tailgate swings upward. Make sure no objects or people are near the rear of the vehicle when opening the tailgate.

⚠ CAUTION - Tailgate lift cylinders

Make certain that you close the tailgate before driving your vehicle. Possible damage may occur to the tailgate lift cylinders and attached hardware if the tailgate is not closed prior to driving.

Closing the tailgate

OSC047439N

To close the tailgate, lower and push down the tailgate firmly. Make sure that the tailgate is securely latched.

Make sure your hands, feet and other parts of your body are safely out of the way before closing the tailgate.

⚠ CAUTION - Closing tailgate

Make sure nothing is near the tailgate latch and striker while closing the tailgate. It may damage the tailgate's latch.

⚠ WARNING - Exhaust fumes

If you drive with the tailgate open, you will draw dangerous exhaust fumes into your vehicle which can cause serious injury or death to vehicle occupants.

If you must drive with the tailgate open, keep the air vents and all windows open so that additional outside air comes into the vehicle.

⚠ WARNING - Riding in cargo area

Occupants should never ride in the rear cargo area where no restraints are available. To avoid injury in the event of an accident or sudden stops, occupants should always be properly restrained.

Emergency tailgate safety release

OSC047440N

Your vehicle is equipped with the emergency tailgate safety release lever located on the bottom of the tailgate. If someone is inadvertently locked in the luggage compartment. The tailgate can be opened by doing as follows:

1. Input the mechanical key into the hole.
2. Push the mechanical key to the right.
3. Push up the tailgate.

⚠ WARNING

- **No one should be allowed to occupy the trunk at any time. The trunk is a very dangerous location in the event of a crash.**
- **Use the release lever for emergencies only. Use with extreme caution, especially while the vehicle is in motion.**

WINDOWS

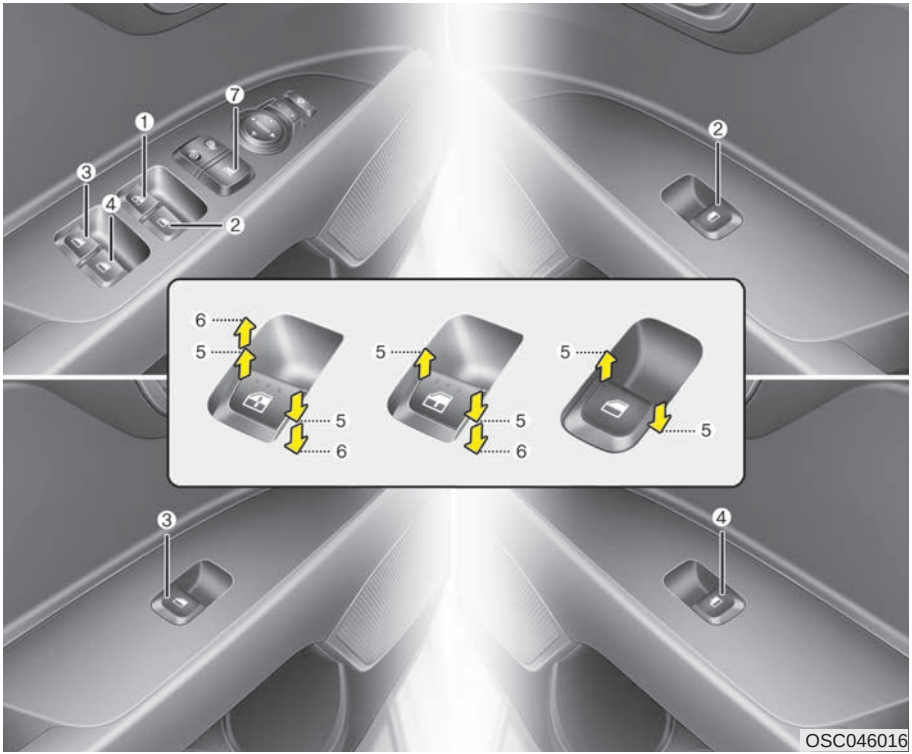

(1) Driver's door power window switch
(2) Front passenger's door power window switch
(3) Rear door (left) power window switch*
(4) Rear door (right) power window switch*
(5) Window opening and closing
(6) Automatic power window UP*/DOWN* (Driver`s window)
(7) Power window lock button*

*: if equipped

✻ NOTICE

In cold and wet climates, power windows may not work properly due to freezing conditions.

Power windows (if equipped)

The ignition switch must be in the ON position for power windows to operate. Each door has a power window switch that controls the door's window. The driver has a power window lock switch which can block the operation of rear passenger windows.

The power windows can be operated for approximately 30 seconds after the ignition key is removed or is set to the ACC or LOCK position. However, if the front doors are opened, the power windows cannot be operated even within the 30 second period.

If the window cannot be closed because it is blocked by objects, remove the objects and close the window.

✻ NOTICE

While driving with the rear windows down or with the sunroof (if equipped) in an open (or partially open) position, your vehicle may demonstrate a wind buffeting or pulsation noise. This noise is a normal occurrence and can be reduced or eliminated by taking the following actions. If the noise occurs with one or both of the rear windows down, partially lower both front windows approximately 2.5 cm (1 in). If you experience the noise with the sunroof open, slightly reduce the size of the sunroof opening.

⚠ CAUTION

Do not install any accessories in the vehicle that extend into the open window area. Such objects will impact the proper function of the Automatic reversal "jam protection" feature described on "Automatic reversal" section of this manual.

Window opening and closing (if equipped)

The driver's door has a master power window switch that controls all the windows in the vehicle.

To open or close a window, press down or pull up the front portion of the corresponding switch to the first detent position (5).

Auto down window (if equipped) (Driver's window)

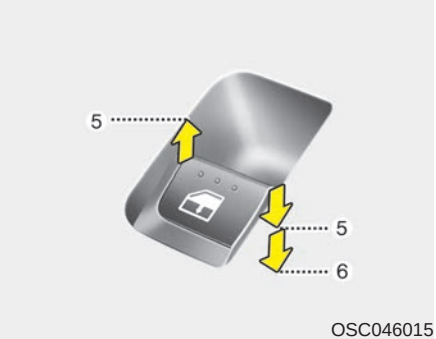

OSC046015

Pressing the power window switch momentarily to the second detent position (6) completely lowers the driver's window even when the switch is released. To stop the window at the desired position while the window is in operation, briefly pull up the switch to the opposite direction of the window movement.

Auto up/down window (if equipped)

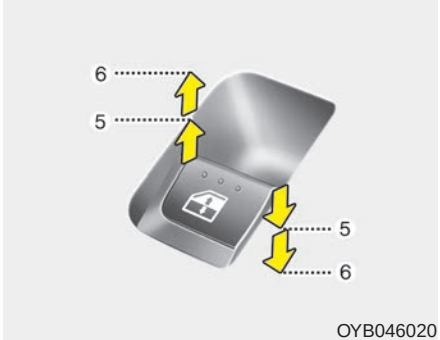

OYB046020

Pressing or pulling up the power window switch momentarily to the second detent position (6) completely lowers or lifts the window even when the switch is released. To stop the window at the desired position while the window is in operation, pull up or press and release the switch to the opposite direction of the movement.

If the power window is not operated correctly, the automatic power window system must be reset as follows:

1. Turn the ignition switch to the ON position.
2. Close the window and continue pulling up on the driver's power window switch for at least 1 second after the window is completely closed.

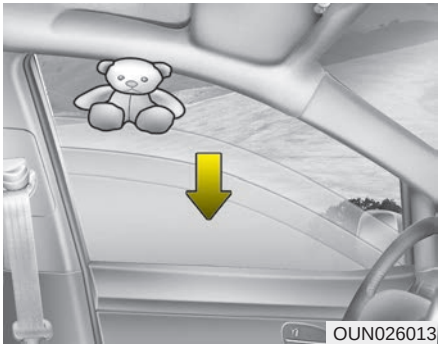

Automatic reversal (if equipped)

If the upward movement of the window is blocked by an object or part of the body, the window will detect the resistance and will stop upward movement. The window will then lower approximately 30 cm. (11.8 in) to allow the object to be cleared.

If the window detects the resistance while the power window switch is pulled up continuously, the window will stop upward movement then lower approximately 2.5 cm. (1 in).

And if the power window switch is pulled up continuously again within 5 seconds after the window is lowered by the automatic window reversal feature, the automatic window reversal will not operate.

The automatic reverse feature for the driver's window is only active when the "auto up" feature is used by fully pulling up the switch. The automatic reverse feature will not operate if the window is raised using the halfway position on the power window switch.

⚠ WARNING

Always check for obstructions before raising any window to avoid injuries or vehicle damage. If an object less than 4 mm (0.16 in.) in diameter is caught between the window glass and the upper window channel, the automatic reverse window may not detect the resistance and will not stop and reverse direction.

⚠ WARNING

The automatic reverse feature doesn't activate while resetting power window system. Make sure body parts or other objects are safely out of the way before closing the windows to avoid injuries or vehicle damage.

⚠ WARNING

Do not install any accessories in the vehicle that extend into the open window area. Such objects could prevent the automatic reverse feature from functioning.

Power window lock button (if equipped)

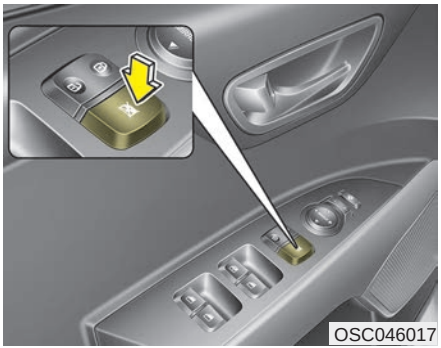

The driver can disable the power window switches on the rear passengers' doors by pressing the power window lock switch to the lock position (pressed).

When the power window lock switch is pressed:

- **The driver's master control can operate all the power windows.**
- **The front passenger's control can operate the front passenger's power window.**
- **The rear passenger's control cannot operate the rear passenger's power window.**

⚠ CAUTION
- Opening/closing Window

To prevent possible damage to the power window system, do not open or close two windows or more at the same time. This will also ensure the longevity of the fuse.

⚠ WARNING - Power windows

- **Do not allow children to play with the power windows. Keep the power window lock button (on the driver's door) in the LOCK (pressed) position.**
- **Do not extend a face or arms outside through the window opening while driving.**

Always double check to make sure all arms, hands, head and other obstructions are safely out of the way before closing a window.

Manual windows (if equipped)

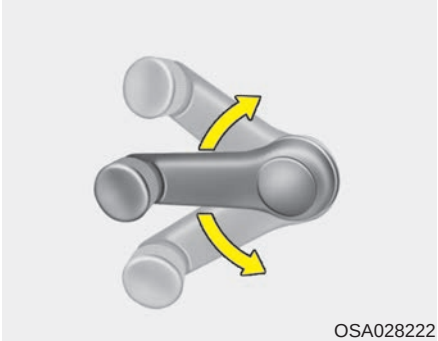

To raise or lower the window, turn the window regulator handle clockwise or counterclockwise.

⚠ WARNING

When opening or closing the windows, make sure your passenger's arms, hands and body are safely out of the way.

HOOD

Opening the hood

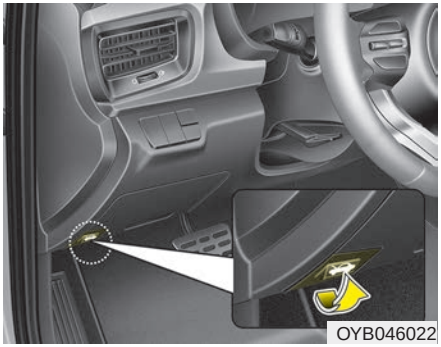

1. Pull the release lever to unlatch the hood. The hood should pop open slightly.

Open the hood after turning off the engine on a flat surface, shifting the shift lever to the P (Park) position for Automatic Transmission and to the 1st (First) gear or R (Reverse) for Manual Transmission, and setting the parking brake.

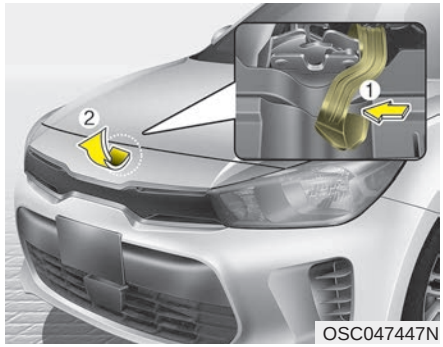

2. Go to the front of the vehicle, raise the hood slightly, push the secondary latch (1) inside of the hood center and lift the hood (2).

3. Pull the support rod from the hood.
4. Hold the hood open with the support rod.

⚠ WARNING - Hot parts

Grasp the support rod in the area wrapped in rubber. The rubber will help prevent you from being burned by hot metal when the engine is hot.

Closing the hood

1. Before closing the hood, check the following:
   - All filler caps in the engine compartment must be correctly installed.
   - Gloves, rags or any other combustible material must be removed from the engine compartment.
2. Return the support rod to its clip to prevent it from rattling.
3. Lower the hood until it is about 30 cm (1 ft) above the closed position and let it drop. Make sure that it locks into place.
4. Check that the hood has engaged properly. If the hood can be raised slightly, it is not properly engaged.

   Open it again and close it with a little more force.

⚠ WARNING - Fire risk

Do not leave gloves, rags or any other combustible material in the engine compartment. Doing so may cause a heat-induced fire.

Hood open warning (if equipped)

OSC047125N

The warning message will appear on the LCD display when hood is open.

The warning chime will operate when the vehicle is being driven at or above 3 km/h (2 mph) with the hood open.

⚠ WARNING - Unsecured engine hood

Always double check to be sure that the hood is firmly latched before driving away. If it is not latched, the hood could fly open while the vehicle is being driven, causing a total loss of visibility, which might result in an accident.

⚠ CAUTION

Before closing the hood, ensure that all obstructions are removed from the engine compartment and surrounding body sheet metal. Closing the hood with an obstruction present could result in damage to the engine, sheet metal or the impacted objects.

⚠ WARNING

The support rod must be inserted completely into the hole whenever you inspect the engine compartment. This will prevent the hood from falling and possibly injuring you.

FUEL FILLER LID

Opening the fuel filler lid

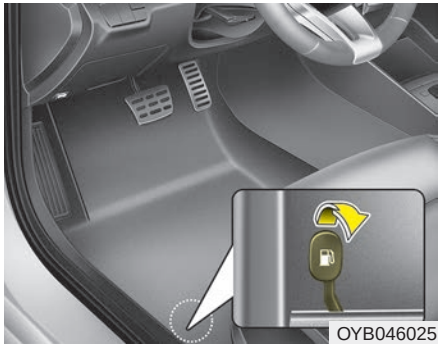

The fuel filler lid must be opened from inside the vehicle by pulling up the fuel filler lid opener.

If the fuel filler lid does not open because ice has formed around it, tap lightly or push on the lid to break the ice and release the lid. Do not pry on the lid. If necessary, spray around the lid with an approved de-icer fluid (do not use radiator anti-freeze) or move the vehicle to a warm place and allow the ice to melt.

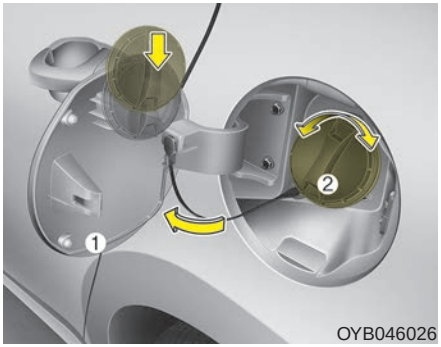

1. Stop the engine.
2. To open the fuel filler lid, pull the fuel filler lid opener up.
3. Pull open the fuel filler lid (1) out to fully open.
4. To remove the cap turn the fuel filler cap (2) counterclockwise.
5. Refuel as needed.

Closing the fuel filler lid

1. To install the cap, turn it clockwise until it “clicks” one time. This indicates that the cap is securely tightened.
2. Close the fuel filler lid and push it lightly and make sure that it is securely closed.

⚠ WARNING - Refueling

Always remove the fuel cap carefully and slowly. If the cap is venting fuel or if you hear a hissing sound, wait until the condition stops before completely removing the cap.

If pressurized fuel sprays out, it can cover your clothes or skin and subject you to the risk of fire and burns.

✻ NOTICE

When refueling on unlevel ground, the fuel gauge may not point to the F position.
It is not a malfunction. If you move your vehicle to a level ground, the fuel gauge will move to the full position.

✻ NOTICE

Tighten the cap until it clicks one time, otherwise the fuel cap open warning indicator light will illuminate.

Always check that the fuel cap is installed securely to prevent fuel spillage in the event of an accident.

⚠ WARNING - Fire/ explosion risk

Read and follow all warnings posted at the gas station facility. Failure to follow all warnings will result in severe personal injury, severe burns or death due to fire or explosion.

⚠ WARNING - Static electricity

- **Before touching the fuel nozzle, you should eliminate potentially dangerous static electricity discharge by touching another metal part of the vehicle, a safe distance away from the fuel filler neck, nozzle, or other gas source.**
- **Do not get back into a vehicle once you have begun refueling since you can generate static electricity by touching, rubbing or sliding against any item or fabric (polyester, satin, nylon, etc.) capable of producing static electricity. Static electricity discharge can ignite fuel vapors resulting in rapid burning. If you must re-enter the vehicle, you should once again eliminate potentially dangerous static electricity discharge by touching a metal part of the vehicle, away from the fuel filler neck, nozzle or other gasoline source.**

⚠ WARNING - Portable fuel container

When using an approved portable fuel container, be sure to place the container on the ground prior to refueling. Static electricity discharge from the container can ignite fuel vapors causing a fire. Once refueling has begun, contact with the vehicle should be maintained until the filling is complete. Use only approved portable plastic fuel containers designed to carry and store gasoline.

⚠ WARNING - Cell phone fires

Do not use cellular phones while refueling. Electric current and/or electronic interference from cellular phones can potentially ignite fuel vapors causing a fire.

⚠ WARNING - Refueling& Vehicle fires

When refueling, always shut the engine off. Sparks produced by electrical components related to the engine can ignite fuel vapors causing a fire. Once refueling is complete, check to make sure the filler cap and filler door are securely closed, before starting the engine.

⚠ WARNING - Smoking

DO NOT use matches or a lighter and DO NOT SMOKE or leave a lit cigarette in your vehicle while at a gas station especially during refueling. Automotive fuel is highly flammable and can, when ignited, result in fire.

Make sure to refuel your vehicle according to the “Fuel requirements” suggested in chapter 1.

If the fuel filler cap requires replacement, use only a genuine Kia cap or the equivalent specified for your vehicle. An incorrect fuel filler cap can result in a serious malfunction of the fuel system or emission control system.

⚠ CAUTION - Exterior paint

Do not spill fuel on the exterior surfaces of the vehicle. Any type of fuel spilled on painted surfaces may damage the paint.

SUNROOF (IF EQUIPPED)

OYB046027

If your vehicle is equipped with a sunroof, you can slide or tilt your sunroof with the sunroof control lever located on the overhead console.

The sunroof can only be opened, closed, or tilted when the ignition switch is in the ON position.

⚠ CAUTION

To prevent damage to the sunroof, periodically remove any dirt that may accumulate on the guide rail.

In cold and wet climates, the sunroof may not work properly due to freezing conditions.

After the vehicle is washed or in a rainstorm, be sure to wipe off any water that is on the sunroof before operating it.

The sunroof cannot slide when it is in the tilt position nor can it be tilted while in an open or slide position.

⚠ CAUTION - Sunroof control lever

Do not continue to press the sunroof control lever after the sunroof is fully opened, closed, or tilted. Damage to the motor or system components could occur.

⚠ WARNING - Sunroof operation

When closing the sunroof, make sure there are no body parts in the movement range of the sliding roof. Parts of the body could become trapped or crushed.

⚠ WARNING

Never adjust the sunroof or sunshade while driving. This could result in loss of control and an accident that may cause death, serious injury, or property damage.

⚠ WARNING

In order to prevent accidental operation of the sunroof, especially by a child, do not let a child operate the sunroof.

⚠ WARNING

Do not sit on the top of the vehicle. It may cause vehicle damage.

⚠ CAUTION

Do not extend any luggage outside the sunroof while driving.

Sunroof open warning (if equipped)

OSC047126N

If the driver removes the ignition key (smart key: turns off the engine) and opens the driver-side door when the sunroof is not fully closed, the warning chime will sound for a few seconds and a warning image will appear on the LCD display.

Close the sunroof securely when leaving your vehicle.

⚠ CAUTION

Make sure the sunroof is fully closed when leaving your vehicle. If the sunroof is opened, rain or snow may leak through the sunroof and wet the interior as well as allow theft to occur.

Sliding the sunroof

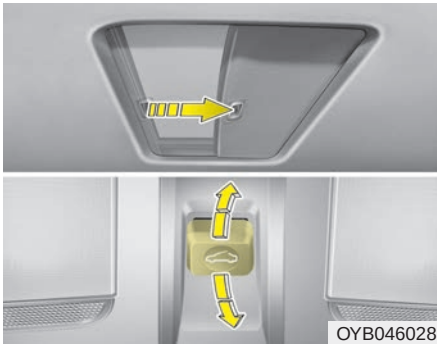

To open the sunroof automatically:

Pull the sunroof control lever backward to the second detent position and then release it. The sunroof will slide all the way open.

The sunroof will slide to the recommended open position (5 cm (about 2 in.) before the maximum slide open position).
To stop the sunroof sliding at any point, pull or push the sunroof control lever briefly.

To open the sunroof to the maximum slide open position, press the switch towards the rear of the vehicle once again and hold it until the sunroof slide all the way open.
To reduce wind noise while driving, we recommend you to drive at the recommended position (about 5 cm (2 in) before the maximum slide open position).

To close the sunroof automatically:

Push the sunroof control lever forward to the second detent position and then release it. The sunroof will automatically close all the way.

To stop the sunroof sliding at any point, pull or push the sunroof control lever briefly.

While driving with the sunroof in an open (or partially open position), your vehicle may demonstrate a wind buffeting or pulsation noise. This noise is a normal occurrence and can be reduced or eliminated by taking the following actions. If you experience the noise with the sunroof open, slightly reduce the size of the sunroof opening.

Automatic reversal

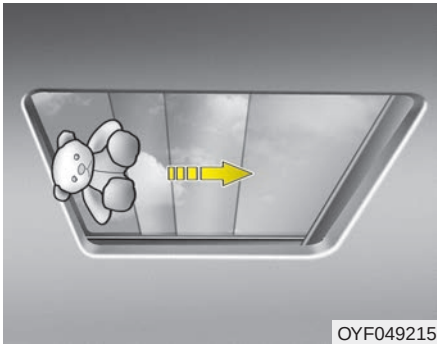
OYF049215

If an object or part of the body is detected while the sunroof glass or sunshade is closing automatically, it will reverse the direction, and then stop.

The auto reverse function does not work if a tiny obstacle is between the sliding glass or sunshade and the sunroof chassis. You should always check that all passengers and objects are away from the sunroof before closing it.

⚠ WARNING

Make sure heads, other body parts or other objects are safely out of the way before closing the window to avoid injuries or vehicle damage.

Objects less than 4 mm (0.16 inch) in diameter caught between the sunroof glass and the front window channel may not be detected by the automatic reverse window and the window will not stop and reverse direction.

Tilting the sunroof

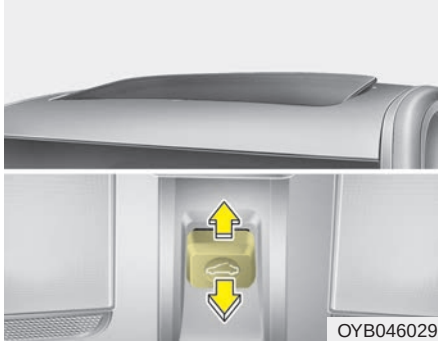
OYB046029

To tilt open the sunroof, push the sunroof control lever upward until the sunroof moves to the desired position.

To close the sunroof, push the sunroof lever forward or pull downward until the sunroof moves to the desired position.

⚠ WARNING - Sunroof

- **Be careful that no head, hands and body parts are obstructed by a closing sunroof.**
- **Do not extend the face, neck, arms or body outside the sunroof while driving.**

⚠ CAUTION - Sunroof motor damage

If you try to open the sunroof when the temperature is below freezing or when the sunroof is covered with snow or ice, the glass or the motor could be damaged.

Sunshade

When opening the sunroof, the sunshade will also open. Once the sunroof is closed, the sunshade can be manually closed.

Resetting the sunroof

Whenever the vehicle battery is disconnected or discharged, or related fuse is blown, you must reset your sunroof system as follows:

1. The ignition switch must be in the ON position.
2. Close the sunroof completely.
3. Release the control lever.
4. Push the control lever forward until the sunroof tilts and slightly moves up and down. Then, release lever.
5. Push the control lever forward until the sunroof is operated as follows:

   TILT OPEN → SLIDE OPEN → SLIDE CLOSE

   Then, release the control lever.

✻ NOTICE

Do not release the lever until the operation is completed.
If you release the lever during operation, try again from step 2.

❊ For more detailed information, contact an authorized Kia dealer.

❊ NOTICE

If the sunroof is not reset when the vehicle battery is disconnected or discharged, or related fuse is blown, the sunroof may operate improperly.

STEERING WHEEL

Electric power steering (EPS)

Power steering uses the motor to assist you in steering the vehicle. If the engine is off or if the power steering system becomes inoperative, the vehicle may still be steered, but it will require increased steering effort.

The electric power steering is controlled by the power steering control unit which senses the steering wheel torque and vehicle speed to command the motor.

The steering wheel becomes heavier as the vehicle's speed increases and becomes lighter as the vehicle's speed decreases for better control of the steering wheel.

Should you notice any change in the effort required to steer during normal vehicle operation, have the power steering checked by an authorized Kia dealer.

✻ NOTICE

The following symptoms may occur during normal vehicle operation:

- **The steering effort is increased immediately after turning the ignition switch on. This happens as the system performs the EPS system diagnostics. When the diagnostics are completed, the steering wheel will return to its normal condition**
- **A click noise may be heard from the EPS relay after the ignition switch is turned to the ON or LOCK position.**
- **Motor noise may be heard when the vehicle is at a stop or at a low driving speed.**
- **The steering effort increases if the steering wheel is rotated continuously when the vehicle is not in motion. However, after a few minutes, it will return to its normal condition.**
- **When you operate the steering wheel in low temperature, noise may occur. If the temperature rises, the noise will likely disappear. This is a normal condition.**

(Continued)

(Continued)

- **When the charging system warning light comes on or the battery voltage is low (when the alternator or battery does not operate normally), the steering wheel may get heavy and become difficult to control operate abnormally.**

If the Electric Power Steering System does not operate normally, the warning light will illuminate on the instrument cluster. The steering wheel may require increased steering effort. Take your vehicle to an authorized Kia dealer and have the vehicle checked as soon as possible.

Tilt and telescopic steering (if equipped)

Tilt steering allows you to adjust the steering wheel before you drive. You can also raise it to give your legs more room when you exit and enter the vehicle.

The steering wheel should be positioned so that it is comfortable for you to drive, while permitting you to see the instrument panel warning lights and gauges.

⚠ WARNING - Steering wheel adjustment

Never adjust the angle and height of the steering wheel while driving. You may lose steering control

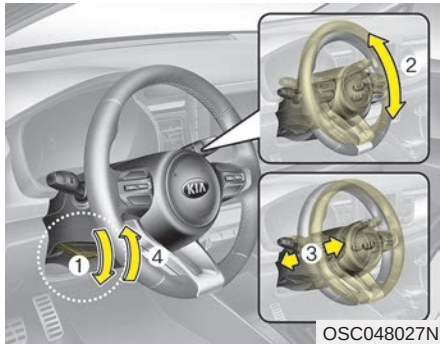

OSC048027N

To change the steering wheel angle, pull down the lock release lever (1), adjust the steering wheel to the desired angle (2) and height (3), then pull up the lock-release lever to lock (4) the steering wheel in place. Be sure to adjust the steering wheel to the desired position before driving.

✻ NOTICE

After adjustment, sometimes the lock release lever may not lock the steering wheel. It is not a malfunction. This occurs when two gears are not engaged correctly. In this case, adjust the steering wheel again and then lock the steering wheel.

Horn

OYB046031

To sound the horn, press the horn symbol on your steering wheel. Check the horn regularly to be sure it operates properly.

To sound the horn, press the area indicated by the horn symbol on your steering wheel (see illustration). The horn will operate only when this area is pressed.

Heated steering wheel (if equipped)

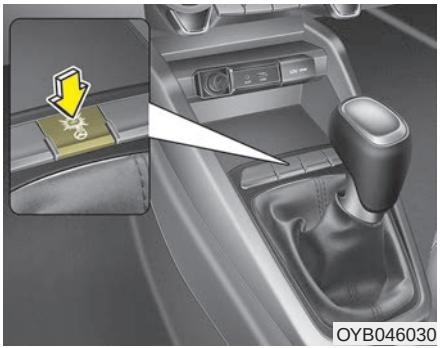

With the ignition switch in the ON position, pressing the heated steering wheel button warms the steering wheel. The indicator on the button will illuminate.

To turn the heated steering wheel off, press the button once again. The indicator on the button will turn off.

If you turn off the ignition while the steering wheel heater is ON, the heater will be OFF.

✻ NOTICE

The heated steering wheel will turn off automatically approximately 30 minutes after the heated steering wheel is turned on.

⚠ CAUTION

- ***Do not install any grip to operate the steering wheel. This causes damage to the heated steering wheel system.***
- ***When cleaning the heated steering wheel, do not use an organic solvent such as paint thinner, benzene, alcohol and gasoline. Doing so may damage the surface of the steering wheel.***
- ***If the surface of the steering wheel is damaged by a sharp object, damage to the heated steering wheel components could occur.***

⚠ WARNING

If the steering wheel becomes too warm, turn the system off. The heated steering wheel may cause burns even at low temperatures, especially if used for long periods of time.

MIRRORS

Inside rearview mirror

Adjust the rearview mirror so that the center view through the rear window is seen. Make this adjustment before you start driving.

Do not place objects in the rear seat which would interfere with your vision through the rear window.

⚠ WARNING - Mirror adjustment

Do not adjust the rearview mirror while the vehicle is moving. This could result in loss of control.

⚠ WARNING

Do not modify the inside mirror in any manner including installing a wider mirror. Doing so could result in injury during an accident or deployment of the air bag.

Day/night rearview mirror

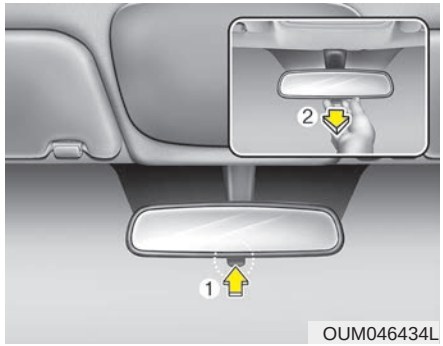

Make this adjustment before you start driving and while the day/night lever is in the day position (1).

Pull the day/night lever toward you (2) to reduce the glare from the headlights of the vehicles behind you during night driving.

Remember that you lose some rearview clarity in the night position.

❈ (1) : Day, (2) : Night

Outside rearview mirror

Be sure to adjust mirror angles before driving.

Your vehicle is equipped with both left-hand and right-hand outside rearview mirrors. The mirrors can be adjusted remotely with the remote switch (if equipped). The mirror heads can be folded to prevent damage during an automatic car wash or when passing through a narrow street.

The right outside rearview mirror is convex. Objects seen in the mirror are closer than they appear.

Use your interior rearview mirror or direct observation to determine the actual distance of following vehicles when changing lanes.

⚠ CAUTION - Rearview mirror

Do not scrape ice off the mirror face; this may damage the surface of the glass. If ice should restrict movement of the mirror, do not force the mirror for adjustment. To remove ice, use a deicer spray, or a sponge or soft cloth with very warm water.

⚠ WARNING - Mirror adjustment

Do not adjust or fold the outside rearview mirrors while the vehicle is moving. This could result in loss of control.

⚠ CAUTION

When cleaning the mirror, use a paper towel or similar material dampened with glass cleaner. Do not spray glass cleaner directly on the mirror. It may cause the liquid cleaner to enter the mirror housing.

Remote control

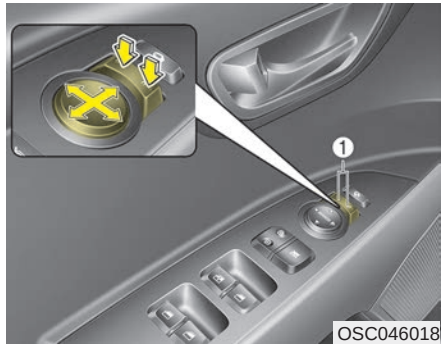

Electric type

The electric remote control mirror switch allows you to adjust the position of the left and right outside rearview mirrors. To adjust the position of either mirror the ignition switch should be in the ACC or ON position.

To adjust the position of either mirror, press the R or L button (1) to select the right side mirror or the left side mirror, then press a corresponding point (▲) on the mirror adjustment control to position the selected mirror up, down, left or right.

After adjustment, press the R or L button again to prevent any inadvertent adjustment.

⚠ CAUTION - Outside mirror

- ***The mirrors stop moving when they reach the maximum adjusting angles, but the motor continues to operate while the switch is pressed. Do not press the switch longer than necessary, the motor may be damaged.***
- ***Do not attempt to adjust the outside rearview mirror by hand. Doing so may damage the parts.***

Folding the outside rearview mirror

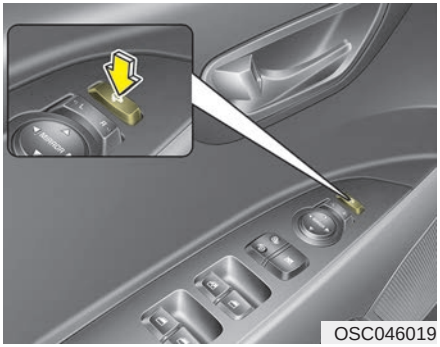

Electric type

To fold the outside rearview mirror, depress the button.

To unfold it, depress the button again.

✻ NOTICE

- Electric type outside rearview mirror

The electric type outside rearview mirror operates even though the ignition switch is in the OFF position. However, to prevent unnecessary battery discharge, do not adjust the mirrors longer than necessary while the engine is not running.

⚠ CAUTION

Do no fold an electric type outside rearview mirror by hand. Doing so could cause motor failure.

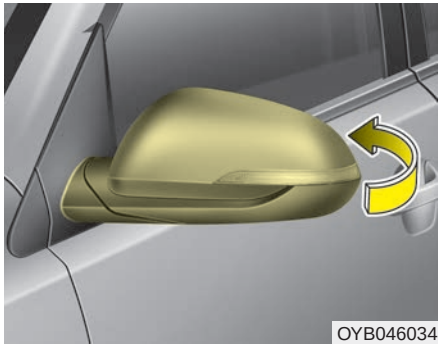

Manual type

To fold outside rearview mirror, grasp the housing of mirror and then fold it toward the rear of the vehicle.

INSTRUMENT CLUSTER

■ **Type A**

■ **Type B**

1. Tachometer
2. Speedometer
3. Engine coolant temperature gauge
4. Fuel gauge
5. Warning and indicator lights
6. LCD display

❊ The actual cluster and contents of the LCD display in the vehicle may differ from the illustration.

OSC048100C/OSC047101C

Instrument Cluster Control

Adjusting Instrument Cluster Illumination

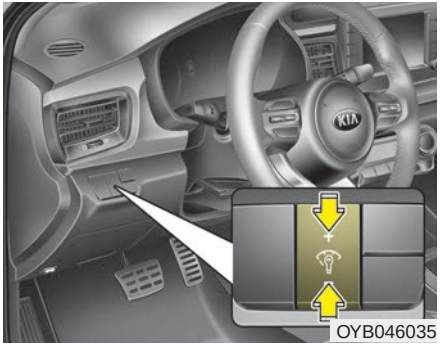

OYB046035

The instrument panel illumination intensity can be adjusted by pressing the control switch with the headlight switch in any position when the ignition switch is in the ON position.

The illumination intensity is shown on the instrument cluster LCD window.

■ Type A

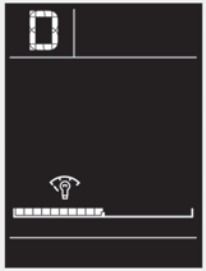

OSC047127N

■ Type B

OYB046121

- If you hold the illumination control button (“+” or “-”), the brightness will be changed continuously.
- If the brightness reaches to the maximum or minimum level, an alarm will sound.

LCD window Control

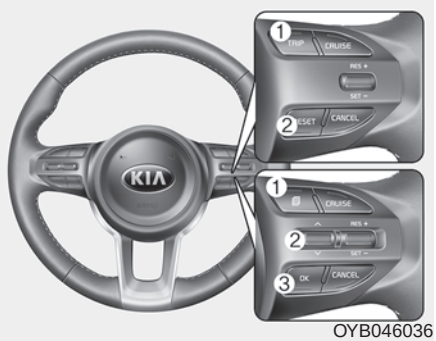

OYB046036

The LCD window modes can be changed by using the control buttons on the steering wheel.

[Type A]

(1) TRIP : TRIP button for changing trip modes

(2) RESET : RESET button for resetting items

[Type B]

(1) 🗐 : MODE button for change the LCD MODES

(2) ∧/∨ : MOVE scroll switch for select the items

(3) OK : SET/RESET button for set the items or reset the items

❈ For the LCD modes, refer to “LCD window” in this chapter.

Gauges

Speedometer

OSC047448C

The speedometer indicates the forward speed of the vehicle.

The speedometer is calibrated in miles per hour and/or kilometers per hour.

Tachometer

OYB046106

The tachometer indicates the approximate number of engine revolutions per minute (rpm).

Use the tachometer to select the correct shift points and to prevent lugging and/or over-revving the engine.

The tachometer pointer may move slightly when the ignition switch is in ACC or ON position with the engine OFF. This movement is normal and will not affect the accuracy of the tachometer once the engine is running.

⚠ CAUTION - Red zone

Do not operate the engine within the tachometer's RED ZONE. This may cause severe engine damage.

⚠ WARNING - Hot radiator

Never remove the radiator cap when the engine is hot. The engine coolant is under pressure and could cause severe burns. Wait until the engine is cool before adding coolant to the reservoir.

Engine coolant temperature gauge

OSC047104N

This gauge shows the temperature of the engine coolant when the ignition switch is ON.

Do not continue driving with an overheated engine. If your vehicle overheats, refer to “If the engine overheats” in chapter 7.

If the gauge pointer moves beyond the normal range area toward the “H” position, it indicates overheating that may damage the engine.

Fuel gauge

OSC047105C

The fuel gauge indicates the approximate amount of fuel remaining in the fuel tank. The fuel tank capacity is given in chapter 9. The fuel gauge is supplemented by a low fuel warning light, which will illuminate when the fuel tank is nearly empty.

On inclines or curves, the fuel gauge pointer may fluctuate or the low fuel warning light may come on earlier than usual due to the movement of fuel in the tank.

✻ NOTICE - Fuel gauge

Running out of fuel can expose vehicle occupants to danger. You must stop and obtain additional fuel as soon as possible after the warning light comes on or when the gauge indicator comes close to the "E" (Empty) level.

⚠ CAUTION - Low fuel

Avoid driving with extremely low fuel level. Running out of fuel could cause the engine to misfire, damaging the catalytic converter.

✻ NOTICE

The fuel display may not be accurate if the vehicle is on an incline.

Odometer

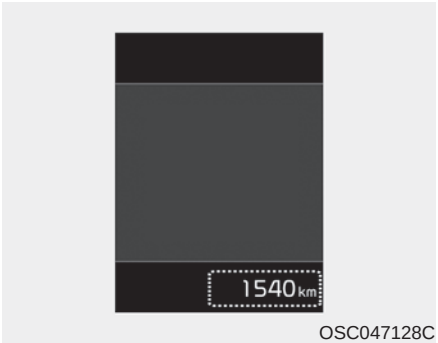

OSC047128C

Odometer

The odometer indicates the total distance the vehicle has been driven.

You will also find the odometer useful to determine when periodic maintenance should be performed.

- Odometer range :

  0 ~ 1,599,999 km or 999,999 miles.

Outside Temperature Gauge

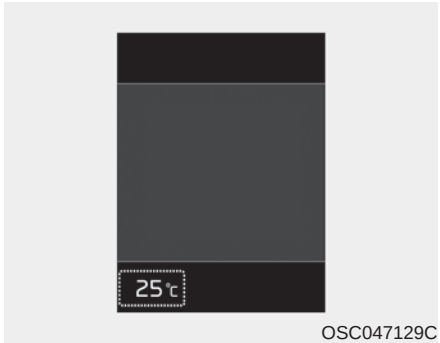

OSC047129C

This gauge indicates the current outside air temperatures by 1°C (1°F).

- Temperature range :
- Type A Cluster : - 40°C ~ 85°C (- 40°F ~ 199°F)
- Type B Cluster : - 40°C ~ 85°C (- 40°F ~ 211°F)

The outside temperature on the display may not change immediately like a general thermometer to prevent the driver from being inattentive.

To change the temperature unit (from °C to °F or from °F to °C)

• Type A Cluster

Press the TRIP button for 5 seconds and more.

• Type B Cluster

The temperature unit can be changed by using the “User Settings” mode of the LCD Windows.

❊ For more details, refer to “LCD Windows” in this chapter.

Transmission Shift Indicator

Automatic Transmission Shift Indicator (if equipped)

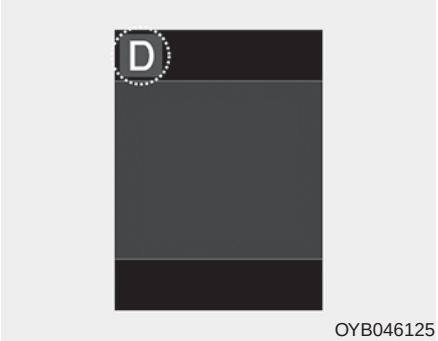

OYB046125

This indicator displays which Automatic Transmission shift lever is selected.

- Park : P
- Reverse : R
- Neutral : N
- Drive : D
- Sports Mode : 1, 2, 3, 4, 5, 6

Manual Transmission shift indicator (if equipped)

OSC047130N

This indicator informs which gear is desired while driving to save fuel.

- Shifting up : ▲2, ▲3, ▲4, ▲5, ▲6
- Shifting down : ▼3, ▼4, ▼5

For example

▲3: Indicates that shifting up to the 3rd gear is desired (currently the shift lever is in the 2nd or 1st gear).

▼3: Indicates that shifting down to the 3rd gear is desired (currently the shift lever is in the 4th, 5th, or 6th gear).

When the system is not working properly, the indicator is not displayed.

LCD WINDOWS (IF EQUIPPED)

Over view

LCD windows show the following various information to drivers.

- Trip information
- LCD modes
- Warning messages

Trip information (Trip computer)

The trip computer is a microcomputer-controlled driver information system that displays information related to driving.

✻ NOTICE

Some driving information stored in the trip computer (for example Average Vehicle Speed) resets if the battery is disconnected.

Trip Modes

- For Type A cluster

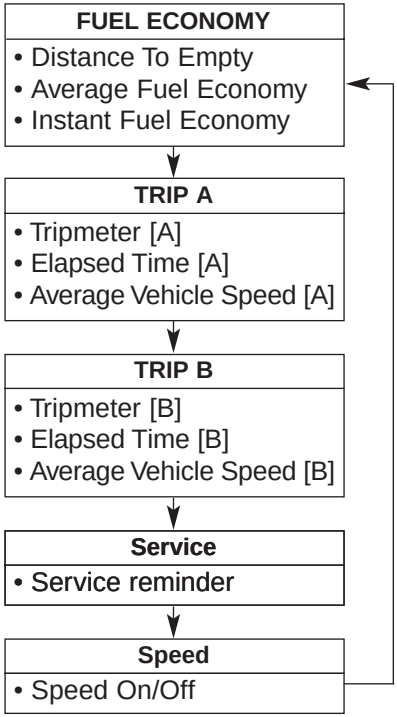

To change the trip mode, press the TRIP button.

- For Type B cluster

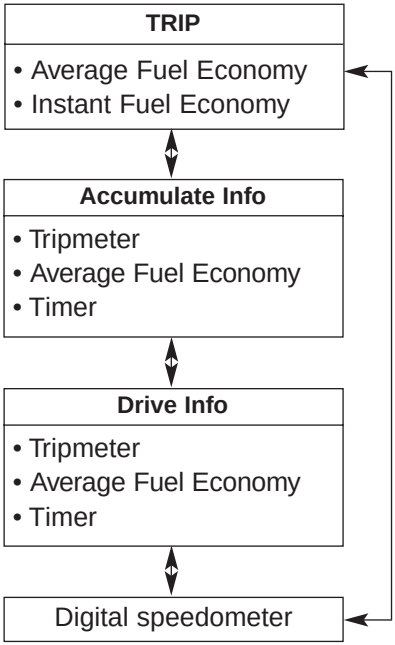

To change the trip mode, scroll the MOVE scroll switch (∧/∨) in the trip computer mode.

Fuel Economy

■ Type A

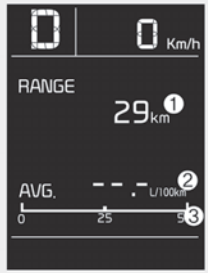

OSC047132C

■ Type B

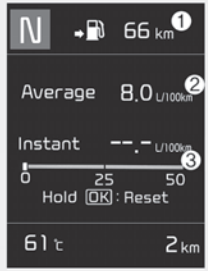

OSC047131C

Distance To Empty (1)

- The range is the estimated distance the vehicle can be driven with the remaining fuel.
  - Distance range : 1 ~ 9,999 km or 1 ~ 99,999 mi.
- If the estimated distance is below 1 km (1 mi.), the trip computer will display “---” as distance to empty.

✻ NOTICE

- **If the vehicle is not on level ground or the battery power has been interrupted, the distance to empty function may not operate correctly.**
- **The distance to empty may differ from the actual driving distance as it is an estimate of the available driving distance.**
- **The trip computer may not register additional fuel if less than 6 liters (1.6 gallons) of fuel are added to the vehicle.**
- **The fuel economy and distance to empty may vary significantly based on driving conditions, driving habits, and condition of the vehicle.**

Average Fuel Economy (2)

- The average fuel economy is calculated by the total driving distance and fuel consumption since the last average fuel economy reset.
  - Fuel economy range: 0.0 ~ 99.9 L/100 km, km/L or MPG
- The average fuel economy can be reset both manually and automatically.

Manual reset

To clear the average fuel economy manually, press the RESET (for Type A cluster), OK (for Type B cluster) (reset) on the steering wheel for more than 1 second when the average fuel economy is displayed.

Automatic reset (for type B cluster)

To make the average fuel economy be reset automatically whenever refueling, select the “Fuel economy auto reset” mode in User Setting menu of the LCD window (Refer to “LCD window”).

- OFF - You may set to default manually by using the trip switch reset button.
- After ignition - The vehicle will automatically set to default once 4 hours pass after the Ignition is in OFF.
- After refueling - After refueling more than 6 liters (1.6 gallons) and driving over 1 km/h (1 mph), the vehicle will reset to default automatically.

✻ NOTICE

The average fuel economy is not displayed for more accurate calculation if the vehicle does not drive more than 10 seconds or 50 meters (0.03 miles) since the ignition switch or Engine Start/Stop button is turned to ON.

Instant Fuel Economy (3)

- This mode displays the instant fuel economy during the last few seconds when the vehicle speed is more than 10 km/h (6.2 mph).
  - Fuel economy range:
    30.0 L/100 km or 0.0 ~ 50.0 MPG

Trip A/B (for type A cluster)

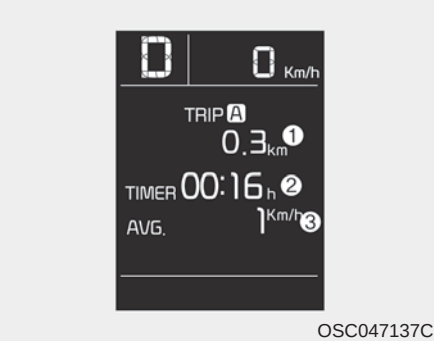

OSC047137C

Tripmeter (1)

- The tripmeter is the total driving distance since the last tripmeter reset.
  - Distance range : 0 ~ 1599999 km or 0 ~ 999999 mi
- To reset the tripmeter, press the RESET button on the steering wheel for more than 1 second when the tripmeter is displayed.

Elapsed Time (2)

- The elapsed time is the total driving time since the last elapsed time reset.
  - Time range (hh:mm) : 00:00 ~ 99:59
- To reset the elapsed time, press the RESET button on the steering wheel for more than 1 second when the elapsed time is displayed.

✻ NOTICE

Even if the vehicle is not in motion, the elapsed time keeps going while the engine is running.

Average Vehicle Speed (3)

- The average vehicle speed is calculated by the total driving distance and driving time since the last average vehicle speed reset.
  - Speed range : 0 ~ 999 km/h or mph
- To reset the average vehicle speed, press the RESET button on the steering wheel for more than 1 second when the average vehicle speed is displayed.

✻ NOTICE

- **The average vehicle speed is not displayed if the driving distance is less than 50 meters (0.03 miles) or the driving time is less than 10 seconds since the ignition switch or Engine Start/Stop button is turned to ON.**
- **Even if the vehicle is not in motion, the average vehicle speed keeps going while the engine is running.**

Digital speedometer

■ Type A

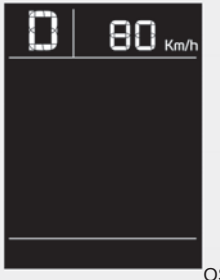

OSC047135C

■ Type B

OSC047136C

This mode displays the current speed of the vehicle.

Accumulated driving information mode (for type B cluster)

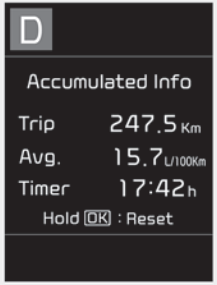

OSC047133C

Displays accumulated information starting from mileage/fuel efficiency/time default point.

- Accumulated information is calculated after the vehicle has run for more than 300 meters (0.2 miles).
- If you press “OK” button for more than 1 second after the Cumulative Information is displayed, the information will be reset.
- If the engine is running, even when the vehicle is not in motion, the information will be accumulated.

One time driving information mode (for type B cluster)

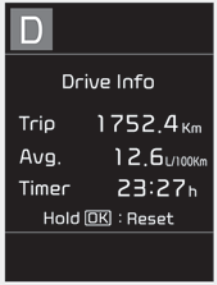

OSC047134C

The vehicle will display Driving Information once per one ignition cycle.

- Fuel efficiency is calculated after the vehicle has run for more than 300 meters (0.2 miles).
- The Driving Information will be reset 4 hours after ignition has been turned off. So, when the vehicle ignition is turned on within 4 hours, the information will not be reset.
- If you press “OK” button for more than 1 second after the Driving Information is displayed, the information will be reset.

- If the engine is running, even when the vehicle is not in motion, the information will be accumulated.

LCD Modes (for type B cluster)

(1) Trip Computer mode

This mode displays driving information like the tripmeter, fuel economy, and so on.

❊ For more details, refer to “Trip Computer” in this chapter.

(2) User Setting mode

On this mode, you can change settings of the doors, lamps and so on.

(3) Master warning mode

This mode informs of warning messages related to TPMS fail, low pressure (if equipped) or Low engine oil (if equipped).

❊ For controlling the LCD modes, refer to “LCD window Control” in this chapter.

Service Mode

Service in

It calculates and displays when you need a scheduled maintenance service (mileage or days).

If the remaining mileage or time reaches 1,500 km (900 mi.) or 30 days, “Service in” message is displayed for several seconds each time you set the ignition switch or Engine Start/Stop Button to the ON position.

Service required

If you do not have your vehicle serviced according to the already inputted service interval, “Service required” message is displayed for several seconds each time you set the ignition switch or Engine Start/Stop Button to the ON position.

To reset the service interval to the mileage and days you inputted before:

- Press the RESET button for more than 1 second. (for Type A cluster)
- Press the OK button (Reset) for more than 1 second. (for Type B cluster)

✻ NOTICE

If any of the following conditions occurs, the mileage and days may be incorrect.
- The battery cable is disconnected.
- The fuse switch is turned off.
- The battery is discharged.

User Settings Mode (for type B cluster)

On this mode, you can change setting of the doors, lamps, and so on.

⚠ WARNING

Do not adjust the User Setting while driving. You may lose your steering control which could cause an accident and severe bodily injury.

Edit settings after shifting to P/Edit settings after engaging parking brake

This warning message appears if you try to adjust the User Settings while driving.

- Automatic Transmission

For your safety, change the User Settings after parking the vehicle, applying the parking brake and moving the shift lever to P (Park).

- Manual Transmission

For your safety, change the User Settings after engaging the parking brake and moving the shift lever to N (Neutral).

Driver Assistance (if equipped)

- **Forward Collision-Avoidance Assist (FCA) (if equipped)** : To activate or deactivate the Forward Collision-Avoidance Assist (FCA) system.

❊For more details, refer to “Forward Collision-avoidance Assist (FCA)” in chapter 6.

- **Forward Collision Warning (FCW) (if equipped)** : Choose the sensitivity of the Forward Collision Warning (FCW).

❊For more details, refer to “Forward Collision-avoidance Assist (FCA)” in chapter 6.

Door

- **Automatically Lock**

- Enable on Speed : All doors will be automatically locked when the vehicle speed exceeds 9.3mph (15km/h).
- Enable on Shift : All doors will be automatically locked if the Automatic Transmission shift lever is shifted from the P (Park) position to the R (Reverse), N (Neutral), or D (Drive) position.

- **Automatically Unlock**
- Disable : The auto door unlock operation will be canceled.
- Vehicle Off/On, Key out : All doors will be automatically unlocked when the ignition key is removed from the ignition switch or the Engine Start/Stop button is set to the OFF position.
- On Shift to P : All doors will be automatically unlocked if the Automatic Transmission shift lever is shifted to the P (Park) position.

- **Two Press Unlock (if equipped)**
- Off : The two press unlock function will be deactivated. Therefore, all doors will unlock if the unlock button on the driver's door is pressed.
- On : The driver's door will unlock if the unlock button on the driver's door is pressed. When the same button is pressed again within 4 seconds, all doors will unlock.

- **Horn Feedback (if equipped)** : If this item is checked, the door lock sound function will be activated when locking doors.
- **Smart Trunk (if equipped)** : To activate or deactivate the Smart Trunk system.

❊For more details, refer to “Smart Trunk” in this chapter.

Lights

- **One Touch Turn Signal**
- Off : The one touch turn signal function will be deactivated.
- 3, 5, 7 Flashes : The lane change signals will blink 3, 5, or 7 times when the turn signal lever is moved slightly.

❊For more details, refer to “Light” in this chapter

- **Head Lamp Delay**
- If this item is checked, the head lamp delay function will be activated.

Convenience

- **Wiper/Light Display (if equipped)** : If this item is checked, the Wiper/Light Display will be activated.
- **Auto rear wiper (reverse) (If equipped)** : If this item is checked, the rear wiper will automatically activated when the front wiper is in ON position and shift lever is in R (reverse) position.
- **Gear Position Pop-up (if equipped)** : If this item is checked, the gear position pop-up display will be activated.
- **Icy road warning (if equipped)** : If this item is checked, the Icy road warning will be activated.

Service interval

- **Service Interval**

  To activate or deactivate the service interval function.
- **Adjust Interval**

  To adjust the interval to kilometer (or mileage) and period.
- **Reset**

  To reset the service interval function.

Other Features

- **Fuel Economy Auto Reset**

- Off : The average fuel economy will not reset automatically whenever refueling.
- After Ignition : The average fuel economy will reset automatically whenever it has passed 4 hours after turning OFF the engine.
- After Refueling : The average fuel economy will reset automatically when refueling.

- **Fuel Economy Unit**

  To select the fuel economy unit.

  (UK gallon ↔ US gallon)
- **Temperature Unit**

  To select the temperature unit. (°C,°F)
- **Tire Pressure Unit (if equipped)** : Choose the tire pressure unit. (psi, kPa, bar)

Language

Choose the language

Reset

You can reset the menus in the User Settings Mode. All menus in the User Settings Mode are initialized, except language and service interval.

Warning messages

Warning messages appear on the LCD to warn the driver. It is located in the center of the instrument cluster.

The warning message may appear differently depending on the type of instrument cluster and some may not show the warning message at all.

The warning message is shown in either symbol, symbol and text, or text type only. You can choose the preferred language (for Type B only) by selecting the User setting menu in LCD mode.

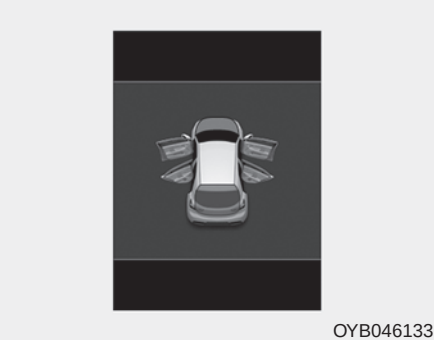

OYB046133

Door, hood, trunk (tailgate) open

- This warning is displayed indicating which door, or the hood, or the trunk (tailgate) is open.

Sunroof Open (if equipped)

- This warning is displayed if you turn off the engine when the sunroof is open.

Engine has overheated

This warning message illuminates when the engine coolant temperature is above 120°C (248°F). This means that the engine is overheated and may be damaged.

❊If your vehicle is overheated, refer to “Overheating” in chapter 7.

Shift to P (for smart key system and automatic transmission)

- This warning message illuminates if you try to turn off the engine without the shift lever in P (Park) position.
- At this time, the Engine Start/Stop Button turns to the ACC position (If you press the Engine Start/Stop Button once more, it will turn to the ON position).

Low Key Battery (for smart key system)

- This warning message illuminates if the battery of the smart key is discharged when the Engine Start/Stop Button changes to the OFF position.

Press START button while turn steering (for smart key system)

- This warning message illuminates if the steering wheel does not unlock normally when the Engine Start/Stop Button is pressed.
- It means that you should press the Engine Start/Stop Button while turning the steering wheel right and left.

Steering wheel unlocked (for smart key system)

- This warning message illuminates if the steering wheel does not lock when the Engine Start/Stop Button changes to the OFF position.

Check Steering Wheel Lock System (for smart key system)

- This warning message illuminates if the steering wheel does not lock normally when the Engine Start/Stop Button changes to the OFF position.

Press brake pedal to start engine (for smart key system and automatic transmission)

- This warning message illuminates if the Engine Start/Stop Button changes to the ACC position twice by pressing the button repeatedly without depressing the brake pedal.
- It means that you should depress the brake pedal to start the engine.

Press clutch pedal to start engine (for smart key system and manual transmission)

- This warning message illuminates if the Engine Start/Stop Button changes to the ACC position twice by pressing the button repeatedly without depressing the clutch pedal.
- It means that you should depress the clutch pedal to start the engine.

Key not in vehicle (for smart key system)

- This warning message illuminates if the smart key is not in the vehicle when you press the Engine Start/Stop Button.
- It means that you should always have the smart key with you.

Key not detected (for smart key system)

- This warning message illuminates if the smart key is not detected when you press the Engine Start/Stop Button.

Press START button again (for smart key system)

- This warning message illuminates if you can not operate the Engine Start/Stop Button when there is a problem with the Engine Start/Stop Button system.
- It means that you could start the engine by pressing the Engine Start/ Stop Button once more.
- If the warning illuminates each time you press the Engine Start/Stop Button, have your vehicle inspected by an authorized Kia dealer.

Press START button with smart key (for smart key system)

- This warning message illuminates if you press the Engine Start/Stop Button while the warning message “Key not detected” is illuminating.
- At this time, the immobilizer indicator light blinks.

Check fuse “BRAKE SWITCH” (for smart key system and automatic transmission)

- This warning message illuminates if the brake switch fuse is disconnected.
- It means that you should replace the fuse with a new one. If that is not possible, you can start the engine by pressing the Engine Start/Stop Button for 10 seconds in the ACC position.

Shift to P or N to start engine (for smart key system and automatic transmission)

- This warning message illuminates if you try to start the engine with the shift lever not in the P (Park) or N (Neutral) position.

✻ NOTICE

You can start the engine with the shift lever in the N (Neutral) position. But, for your safety, we recommend that you start the engine with the shift lever in the P (Park) position.

Icy Road Warning Light (if equipped)

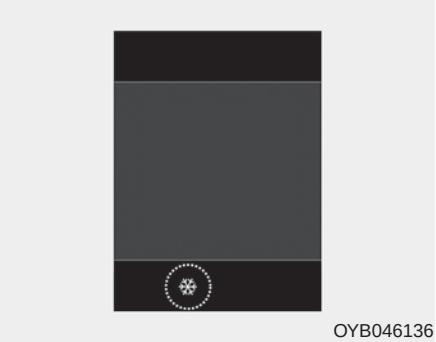

This warning light is to warn the driver the road may be icy.

When the following conditions occur, the warning light (including Outside Temperature Gauge) blinks 5 times and then illuminates, and also warning chime sounds once.

- The temperature on the Outside Temperature Gauge is below approximately 4°C (40°F).

✻ NOTICE

If the icy road warning light appears while driving, you should drive more attentively and refrain from speeding, rapid acceleration, sudden braking or sharp turning.

WARNING AND INDICATOR LIGHTS

Warning lights

✻ NOTICE - Warning lights

Make sure that all warning lights are OFF after starting the engine. If any light is still ON, this indicates a situation that needs attention.

Air bag Warning Light

This warning light illuminates:

- Once you set the ignition switch or Engine Start/Stop Button to the ON position.
  - It illuminates for approximately 6 seconds and then goes off.
- When there is a malfunction with the SRS.

  In this case, have your vehicle inspected by an authorized Kia dealer.

Seat Belt Warning Light

This warning light informs the driver that the seat belt is not fastened.

❊ For more details, refer to the “Seat Belts” in chapter 3.

Parking Brake & Brake Fluid Warning Light

This warning light illuminates:

- Once you set the ignition switch or Engine Start/Stop Button to the ON position.
  - It illuminates for approximately 3 seconds
  - It remains on if the parking brake is applied.
- When the parking brake is applied.
- When the brake fluid level in the reservoir is low.
  - If the warning light illuminates with the parking brake released, it indicates the brake fluid level in reservoir is low.

If the brake fluid level in the reservoir is low:

1. Drive carefully to the nearest safe location and stop your vehicle.
2. With the engine stopped, check the brake fluid level immediately and add fluid as required (For more details, refer to “Brake Fluid” in chapter 8).

   Then check all brake components for fluid leaks. If any leak on the brake system is still found, the warning light remains on, or the brakes do not operate properly, do not drive the vehicle.

   In this case, have your vehicle towed to an authorized Kia dealer and inspected.

Dual-diagonal braking system

Your vehicle is equipped with dual-diagonal braking systems. This means you still have braking on two wheels even if one of the dual systems should fail.

With only one of the dual systems working, greater pedal pressure will be required to stop the vehicle.

Also, the vehicle will require increased stopping distance with only a portion of the brake system working.

If the brakes fail while you are driving, shift to a lower gear for additional engine braking and stop the vehicle as soon as it is safe to do so.

Driving the vehicle with a warning light ON is dangerous. If the Parking Brake & Brake Fluid Warning Light illuminates with the parking brake released, it indicates that the brake fluid level is low.

In this case, have your vehicle inspected by an authorized Kia dealer.

Anti-lock Brake System (ABS) Warning Light

This warning light illuminates:

- Once you set the ignition switch or Engine Start/Stop Button to the ON position.
  - It illuminates for approximately 3 seconds and then goes off.
- When there is a malfunction with the ABS (The normal braking system will still be operational without the assistance of the anti-lock brake system).

  In this case, have your vehicle inspected by an authorized Kia dealer.

Electronic Brake force Distribution (EBD) System Warning Light

These two warning lights illuminate at the same time while driving:

- When the ABS and regular brake system may not work normally.

  In this case, have your vehicle inspected by an authorized Kia dealer.

⚠ WARNING - ABS/Brake Light

When both ABS and Parking Brake & Brake Fluid Warning Lights are on, the brake system will not work normally and you may experience an unexpected and dangerous situation during sudden braking thereby increasing the risk of a crash or injury.

In this case, avoid high speed driving and abrupt braking. Have your vehicle inspected by an authorized Kia dealer as soon as possible.

✻ NOTICE - Electronic Brake force Distribution (EBD) System Warning Light

When the ABS Warning Light is on or both ABS and Parking Brake & Brake Fluid Warning Lights are on, the speedometer, odometer, or trip-meter may not work. Also, the EPS Warning Light may illuminate and the steering effort may increase or decrease.
In this case, have your vehicle inspected by an authorized Kia dealer as soon as possible.

Electronic Power Steering (EPS) Warning Light (if equipped)

This warning light illuminates:

- Once you set the ignition switch or Engine Start/Stop Button to the ON position.
  - It remains on until the engine is started.
- When there is a malfunction with the EPS.

  In this case, have your vehicle inspected by an authorized Kia dealer.

Malfunction Indicator Lamp (MIL)

This warning light illuminates:

- Once you set the ignition switch or Engine Start/Stop Button to the ON position.
  - It remains on until the engine is started.
- When there is a malfunction with the emission control system.

  In this case, have your vehicle inspected by an authorized Kia dealer.

⚠ CAUTION

If the Malfunction Indicator Lamp (MIL) illuminates, potential catalytic converter damage is possible which could result in loss of engine power.

In this case, have your vehicle inspected by an authorized Kia dealer as soon as possible.

⚠ CAUTION - Malfunction Indicator Lamp (MIL)

Driving with the Malfunction Indicator Lamp (MIL) on may cause damage to the emission control systems which could effect drivability and/or fuel economy.

Charging System Warning Light

This warning light illuminates:

- Once you set the ignition switch or Engine Start/Stop Button to the ON position.
  - It remains on until the engine is started.
- When there is a malfunction with either the alternator or electrical charging system.

If there is a malfunction with either the alternator or electrical charging system:

1. Drive carefully to the nearest safe location and stop your vehicle.
2. Turn the engine off and check the alternator drive belt for looseness or breakage.

   If the belt is adjusted properly, there may be a problem in the electrical charging system.

   In this case, have your vehicle inspected by an authorized Kia dealer as soon as possible.

Engine Oil Pressure Warning Light

This warning light illuminates:

- Once you set the ignition switch or Engine Start/Stop Button to the ON position.
  - It remains on until the engine is started.
- When the engine oil pressure is low.

If the engine oil pressure is low:

1. Drive carefully to the nearest safe location and stop your vehicle.
2. Turn the engine off and check the engine oil level (For more details, refer to “Engine Oil” in section 8). If the level is low, add oil as required.

   If the warning light remains on after adding oil or if oil is not available, have your vehicle inspected by an authorized Kia dealer as soon as possible.

⚠ **CAUTION - Engine Overheating**

Do not continue driving with the engine overheated. Otherwise the engine may be damaged.

⚠ **CAUTION - Engine damage**

If the engine is not stopped immediately after the engine oil pressure warning light is illuminated and stays on while the engine is running, serious engine damage may result.

If the warning light stays on while the engine is running, there may be serious engine damage. In this case,

1. Stop the vehicle as soon as it is safe to do so.
2. Turn off the engine and check the oil level. If the oil level is low, fill the engine oil to the proper level.
3. Start the engine again. If the warning light stays on after the engine is started, turn the engine off immediately. In this case, have your vehicle inspected by an authorized Kia dealer.

Low Fuel Level Warning Light

This warning light illuminates:

When the fuel tank is nearly empty.

If the fuel tank is nearly empty:

Add fuel as soon as possible.

⚠ **CAUTION - Low Fuel Level**

Driving with the Low Fuel Level warning light on or with the fuel level below "E" can cause the engine to misfire and damage the catalytic converter (if equipped).

Low Tire Pressure Warning Light (if equipped)

This warning light illuminates:

- Once you set the ignition switch or Engine Start/Stop Button to the ON position.
  - It illuminates for approximately 3 seconds and then goes off.
- When one or more of your tires are significantly underinflated.

❊For more details, refer to “Tire Pressure Monitoring System (TPMS)” in chapter 7.

This warning light remains on after blinking for approximately 60 seconds or repeats blinking on and off at the intervals of approximately 3 seconds:

- When there is a malfunction with the TPMS.

  In this case, have your vehicle inspected by an authorized Kia dealer as soon as possible.

❊For more details, refer to “Tire Pressure Monitoring System (TPMS)” in chapter 7.

⚠ WARNING
- Low tire pressure

- **Significantly low tire pressure makes the vehicle unstable and can contribute to loss of vehicle control and increased braking distances.**
- **Continued driving or low pressure tires will cause the tires to overheat and fail.**

The TPMS cannot alert you to severe and sudden tire damage caused by external factors.

If you notice any vehicle instability, immediately take your foot off the accelerator pedal, apply the brakes gradually with light force, and slowly move to a safe position off the road.

Door Ajar Warning Light (if equipped)

This warning light illuminates:

When a door is not closed securely.

Trunk (tailgate) Open Warning Light (if equipped)

This warning light illuminates:

When the trunk (tailgate) is not closed securely.

Washer Fluid Warning Light (if equipped)

This warning light illuminates:

- When the washer fluid level in the reservoir is nearly empty.

  In this case, you should refill the washer fluid.

Master Warning Mode (if equipped)

- This warning light informs the driver of the following situations:
  - Forward Collision-Avoidance Assist (FCA) malfunction (if equipped)
  - Forward Collision Warning (FCW) malfunction (if equipped)
  - Forward Collision-Avoidance Assist (FCA) radar blind (if equipped)

If the warning situation is solved, the master warning light will turn off.

LED Headlamp Warning Light (if equipped)

This warning light illuminates:

- Once you set the Engine Start/Stop Button to the ON position.
  - It illuminates for approximately 3 seconds and then goes off.
- When there is a malfunction with the LED headlamp.

In this case, have the vehicle inspected by an authorized Kia dealer.

This warning light blinks:

- When there is a malfunction with a LED headlamp related part.

In this case, have the vehicle inspected by an authorized Kia dealer.

✻ NOTICE

Continuous driving with the LED Headlamp Warning Light on or blinking can reduce LED headlamp (low beam) life.

Indicator Lights

Electronic Stability Control (ESC) Indicator Light

This indicator light illuminates:

- Once you set the ignition switch or Engine Start/Stop Button to the ON position.
  - It illuminates for approximately 3 seconds and then goes off.
- When there is a malfunction with the ESC system.

  In this case, have your vehicle inspected by an authorized Kia dealer.

This indicator light blinks:

While the ESC is operating.

❊For more details, refer to “Electronic Stability Control (ESC)” in chapter 6.

Electronic Stability Control (ESC) OFF Indicator Light

This indicator light illuminates:

- Once you set the ignition switch or Engine Start/Stop Button to the ON position.
  - It illuminates for approximately 3 seconds and then goes off.
- When you deactivate the ESC system by pressing the ESC OFF button.

❊For more details, refer to “Electronic Stability Control (ESC)” in chapter 6.

Immobilizer Indicator Light (Without Smart Key)

This indicator light illuminates:

- When the vehicle detects the immobilizer in your key properly while the ignition switch is ON.
  - At this time, you can start the engine.
  - The indicator light goes off after starting the engine.

This indicator light blinks:

- When there is a malfunction with the immobilizer system.

  In this case, have your vehicle inspected by an authorized Kia dealer.

Immobilizer Indicator Light (With Smart Key)

This indicator light illuminates for up to 30 seconds:

- When the vehicle detects the smart key in the vehicle properly while the Engine Start/Stop Button is ACC or ON.
  - At this time, you can start the engine.
  - The indicator light goes off after starting the engine.

This indicator light blinks for about 10 seconds:

- When the smart key is not in the vehicle.
  - At this time, you cannot start the engine.

This indicator light illuminates for 2 seconds and goes off:

- When the vehicle can not detect the smart key which is in the vehicle while the Engine Start/Stop Button is ON.

  In this case, have your vehicle inspected by an authorized Kia dealer.

This indicator light blinks:

- When the battery of the smart key is weak.
  - At this time, you can not start the engine. However, you can start the engine if you press the Engine Start/Stop Button with the smart key. (For more details, refer to “Starting the Engine” in section 6).
- When there is a malfunction with the immobilizer system.

  In this case, have your vehicle inspected by an authorized Kia dealer.

Turn Signal Indicator Light

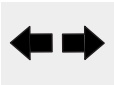

This indicator light blinks:

- When you turn the turn signal light on.

If any of the following occurs, there may be a malfunction with the turn signal system. In this case, have your vehicle inspected by an authorized Kia dealer.

- The indicator light does not blink but illuminates.
- The indicator light blinks more rapidly.
- The indicator light does not illuminate at all.

High Beam Indicator Light

This indicator light illuminates:

- When the headlights are on and in the high beam position
- When the turn signal lever is pulled into the Flash-to-Pass position.

Light ON Indicator Light

This indicator light illuminates:

- When the tail lights or headlights are on.

Front Fog Indicator Light (if equipped)

This indicator light illuminates:

- When the front fog lights are on.

Cruise Indicator Light (if equipped)

CRUISE

This indicator light illuminates:

- When the cruise control system is enabled.

❊For more details, refer to “Cruise Control System” in chapter 6.

Cruise SET Indicator Light (if equipped)

SET

This indicator light illuminates:

- When the cruise control speed is set.

❊For more details, refer to “Cruise Control System” in chapter 6.

SPORT Mode Indicator Light (if equipped)

SPORT

This indicator light illuminates:

- When you select “SPORT” mode as drive mode.

❊For more details, refer to “Sport Mode” in chapter 6.

REAR VIEW MONITOR

Rear view monitor

OYB046401

OSC047438N

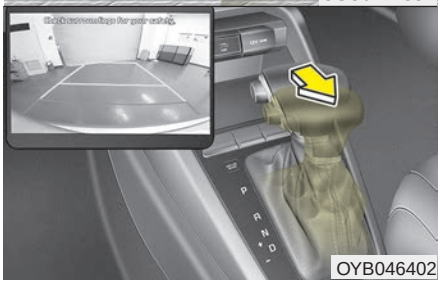

OYB046402

The rear view monitor will activate with the ignition switch on and the shift lever in the R (Reverse) position.

Please note that during initial start up, the rear view monitor may not display instantly due to the audio system booting up.

Approximately two to four seconds may be required before displaying during initial reverse selection. This occurs when starting and immediately shifting to reverse.

This system is a supplemental system that shows behind the vehicle through the UVO audio or navigation display backing-up.

It is the responsibility of the driver to always check the inside/outside rearview mirrors and the area behind the vehicle before and while backing up.

Always keep the camera lens clean. If lens is covered with foreign matter, the camera may not operate normally.

The rear view monitor is not a substitute for proper and safe backing-up procedures. Always drive safely and use caution when backing up.

The rear view monitor may not display every object behind the vehicle.

⚠ WARNING - Backing Up & Using Camera

Never rely solely on the rear view monitor when backing up. Prior to entering your vehicle always do a visual check of the area behind your vehicle, and before backing up be aware of your surroundings and supplement the rear view monitor by looking over your shoulders and checking your rear view mirrors.

Due to the difficulty of ensuring that the area behind you remains clear, always back up slowly and stop immediately if you even suspect that a person, and especially a child, might be behind you.

LIGHTING

Battery saver function

- The purpose of this feature is to prevent the battery from being discharged. The system automatically turns off the parking lights when the driver removes the ignition key and opens the driver-side door.
- With this feature, the parking lights will turn off automatically if the driver parks on the side of the road at night.

  If necessary, to keep the lights on when the ignition key is removed, perform the following:

  1) Open the driver-side door.
  2) Turn the parking lights OFF and ON again using the light switch on the steering column.

Headlight escort function (if equipped)

The headlights (and/or taillights) will remain on for approximately 5 minutes after the ignition key is removed or turned to the ACC or LOCK position. However, if the driver's door is opened and closed, the headlights are turned off after 15 seconds.

The headlights can be turned off by pressing the lock button on the transmitter (or smart key) twice or turning off the light switch from the headlight or Auto light position.

If the driver gets out of the vehicle through other doors (except driver's door), the battery saver function does not operate and the headlight escort function does not turn off automatically. Therefore, It causes the battery to be discharged. In this case, make sure to turn off the lamp before getting out of the vehicle.

If the headlights are not working properly have your vehicle inspected by an authorized Kia dealer.

Don't attempt to inspect or replace the wiring yourself to prevent malfunction.

Headlight welcome function (if equipped)

When the headlight switch is in the ON or AUTO position and all doors (and tailgate) are closed and locked, if you press the door unlock button on the transmitter (or smart key), the headlights will come on for about 15 seconds.

If the headlight switch is in the AUTO position, the function can only operate at night.

At this time, if you press the door unlock button again or door lock button on the transmitter (or smart key), the headlights will turn off immediately.

Daytime running light

The Daytime Running Lights (DRL) can make it easier for others to see the front of your vehicle during the day. DRL can be helpful in many different driving conditions, and it is especially helpful after dawn and before sunset.

The DRL system turns OFF when:

1. The headlight switch is ON.
2. The engine is OFF.
3. The front fog light is on.
4. Engaging the Parking Brake

Lighting control

■ Type A

OSC046400

■ Type B

OSC047414N

The light switch has a Headlight and a Parking light position.

To operate the lights, turn the knob at the end of the control lever to one of the following positions:

(1) OFF position
(2) Auto light position (if equipped)
(3) Parking light position
(4) Headlight position

Parking light position ( )

■ Type A

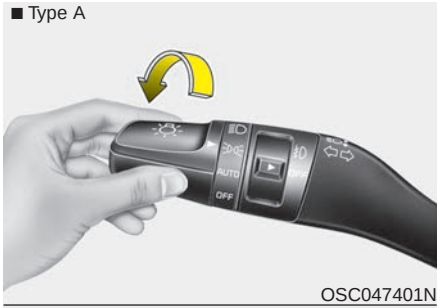

OSC047401N

■ Type B

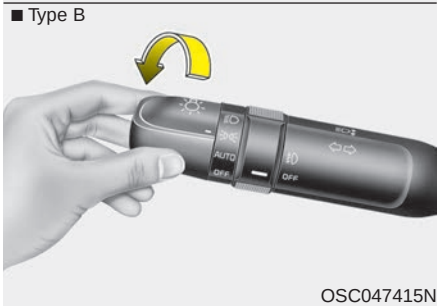

OSC047415N

When the light switch is in the parking light position (3rd position), the tail, position, license and instrument panel lights will turn ON.

Headlight position ( )

■ Type A

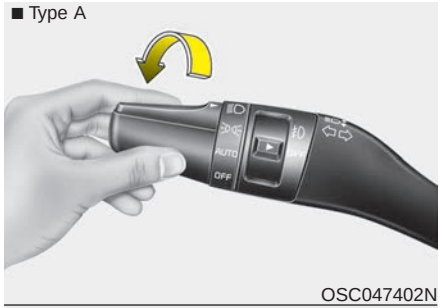

OSC047402N

■ Type B

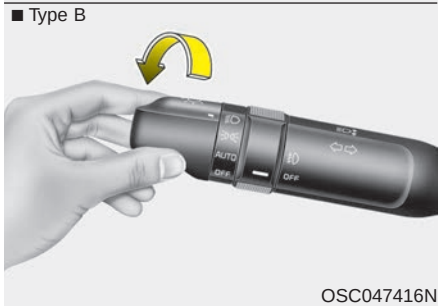

OSC047416N

When the light switch is in the headlight position (4th position) the head, tail, position, license and instrument panel lights will turn ON.

The ignition switch must be in the ON position to turn on the headlights.

Auto light position (if equipped)

■ Type A

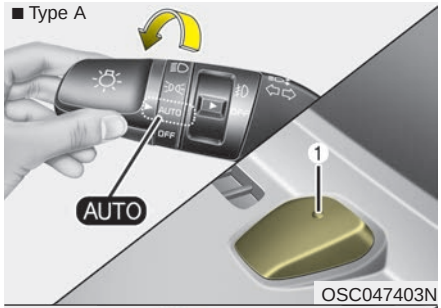

OSC047403N

■ Type B

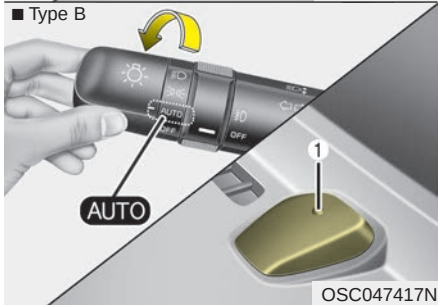

OSC047417N

When the light switch is in the AUTO light position, the taillights and headlights will turn ON or OFF automatically depending on the amount of light outside the vehicle.

⚠ **CAUTION**

Never place anything over the sensor (1) located on the instrument panel. This will ensure better auto-light system control.

Do not clean the sensor using a window cleaner, the cleaner may leave a light film which could interfere with sensor operation.

If your vehicle has window tint or other types of metallic coating on the front windshield, the Auto light system may not work properly.

High beam operation

■ Type A

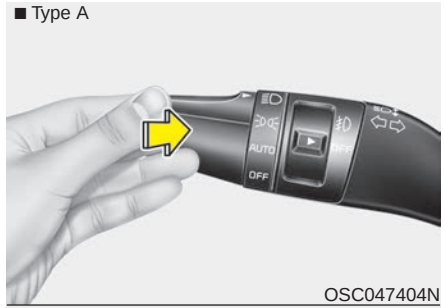

OSC047404N

■ Type B

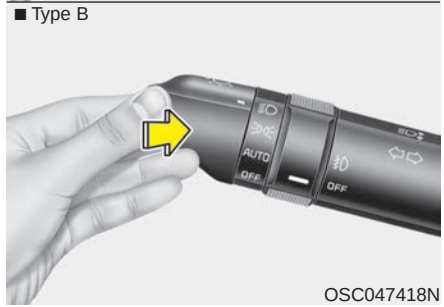

OSC047418N

To turn on the high beam headlights, push the lever away from you. Pull it back for normal (low beam) position.

The high-beam indicator will light when the headlight high beams are switched on.

To prevent the battery from being discharged, do not leave the lights on for a prolonged time while the engine is not running.

⚠ **WARNING - High beams**

Do not use high beam when there are other vehicles. Using high beam could obstruct the other driver's vision.

■ Type A

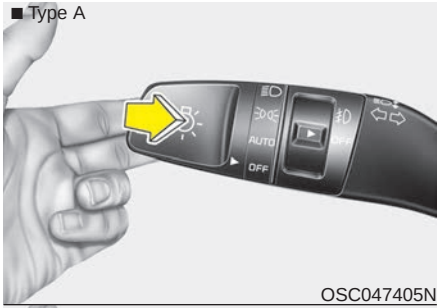

OSC047405N

■ Type B

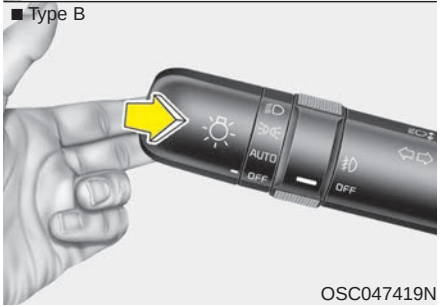

OSC047419N

To flash the headlights, pull the lever towards you. It will return to the normal (low-beam) position when released. The headlight switch does not need to be on to use this flashing feature.

Turn signals and lane change signals

■ Type A

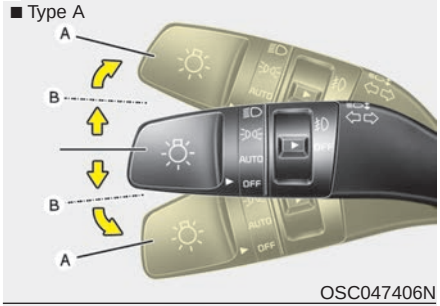

OSC047406N

■ Type B

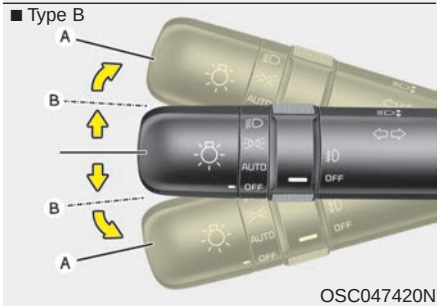

OSC047420N

The ignition switch must be on for the turn signals to function. To turn on the turn signals, move the lever up or down (A). The green arrow indicators on the instrument panel indicate which turn signal is operating.

They will self-cancel after a turn is completed. If the indicator continues to flash after a turn, manually return the lever to the OFF position.

To signal a lane change, move the turn signal lever slightly and hold it in position (B). The lever will return to the OFF position when released.

If an indicator stays on and does not flash or if it flashes abnormally, one of the turn signal bulbs may be burned out and will require replacement.

One-touch lane change function

To activate a one-touch lane change function, move the turn signal lever slightly and then release it. The lane change signals will blink 3, 5 or 7 times.

You can choose one-touch lane change blinking function in “One touch turn signal” of “User setting”. Refer to “User setting” in chapter 4. (if equipped)

✻ NOTICE

If an indicator flash is abnormally quick or slow, the bulb may be burned out or have a poor electrical connection in the circuit.

Front fog light (if equipped)

■ Type A

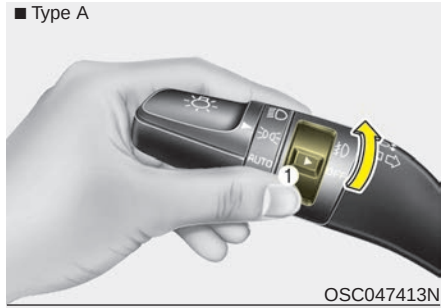

OSC047413N

■ Type B

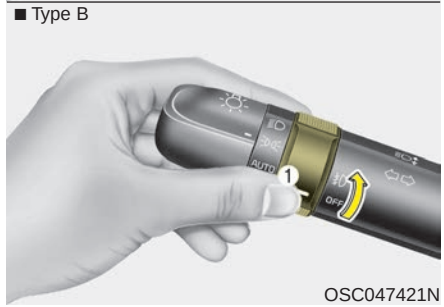

OSC047421N

Fog lights are used to provide improved visibility when visibility is poor due to fog, rain or snow, etc. The fog lights will turn on when the fog light switch (1) is turned to the on position after the headlights are turned on.

To turn off the fog lights, turn the switch (1) to the off position.

When in operation, the fog lights consume large amounts of vehicle electrical power. Only use the fog lights when visibility is poor.

WIPERS AND WASHERS

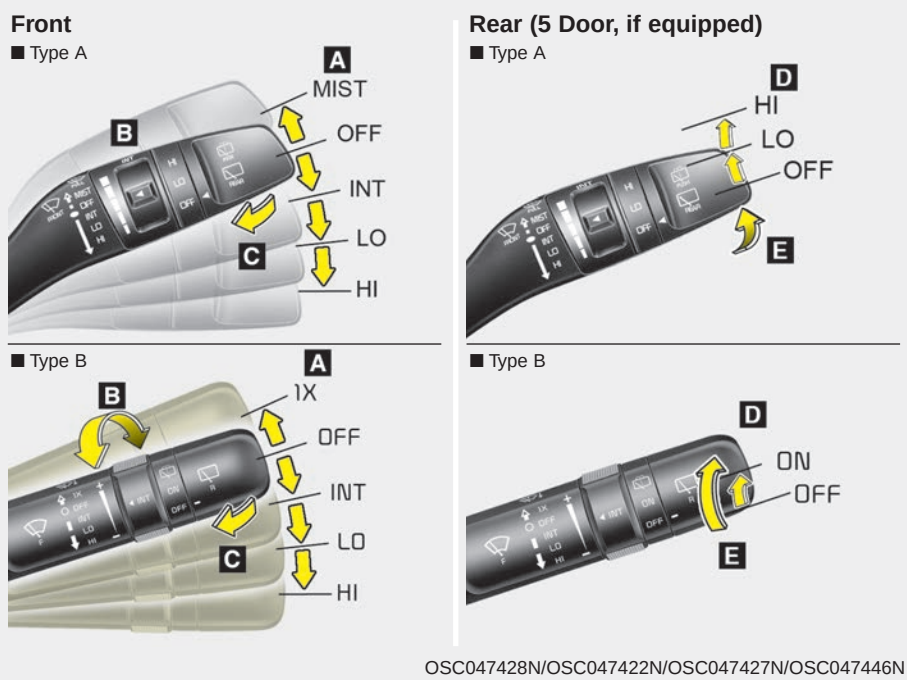

OSC047428N/OSC047422N/OSC047427N/OSC047446N

A : Wiper speed control (front)
- · HI – High wiper speed
- · LO – Low wiper speed
- · INT – Intermittent wipe
- · AUTO* – Automatic control wipe
- · OFF – Off
- · MIST – Single wipe

B : Intermittent control wipe time adjustment

C : Wash with brief wipes (front)*

D : Rear wiper/washer control
- · /ON – Continuous wipe
- · O/OFF – Off
- · HI – High wiper speed
- · LO – Low wiper speed

E : Wash with brief wipes (rear)

* : if equipped

Windshield wipers

Operates as follows when the ignition switch is turned ON.

MIST : For a single wiping cycle, push the lever upward and release it. The wipers will operate continuously if the lever is held in this position.

OFF : Wiper is not in operation

INT : Wiper operates intermittently at the same wiping intervals. Use this mode in a light rain or mist. To vary the speed setting, turn the speed control knob.

LO : Normal wiper speed

HI : Fast wiper speed

✻ NOTICE

If there is a heavy accumulation of snow or ice on the windshield, defrost the windshield for about 10 minutes, or until the snow and/or ice is removed before using the windshield wipers to ensure proper operation.

If you do not remove the snow and/or ice before using the wiper and washer, it may damage the wiper and washer system.

AUTO (Automatic) control (if equipped)

OSC047411N

The rain sensor located on the upper end of the windshield glass senses the amount of rainfall and controls the wiping cycle for the proper interval. The more it rains, the faster the wiper operates. When the rain stops, the wiper stops.

To vary the speed setting, turn the speed control knob (1).

If the wiper switch is set in AUTO mode when the ignition switch is ON, the wiper will operate once to perform a self-check of the system. Set the wiper to off position when the wiper is not in use.

⚠ CAUTION

When the ignition switch is ON and the windshield wiper switch is placed in the AUTO mode, use caution in the following situations to avoid any injury to the hands or other parts of the body:

- ***Do not touch the upper end of the windshield glass facing the rain sensor.***
- ***Do not wipe the upper end of the windshield glass with a damp or wet cloth.***
- ***Do not put pressure on the windshield glass.***

⚠ CAUTION

When washing the vehicle, set the wiper switch in the off position to stop the auto wiper operation.

The wiper may operate and be damaged if the switch is set in the AUTO mode while washing the vehicle.

Do not remove the sensor cover located on the upper end of the passenger side windshield glass. Damage to system parts could occur and may not be covered by your vehicle warranty.

When starting the vehicle in winter, set the wiper switch in the off position. Otherwise, wipers may operate and ice may damage the windshield wiper blades. Always remove all snow and ice and defrost the windshield properly prior to operating the windshield wipers.

Windshield washers (front)

■ Type A

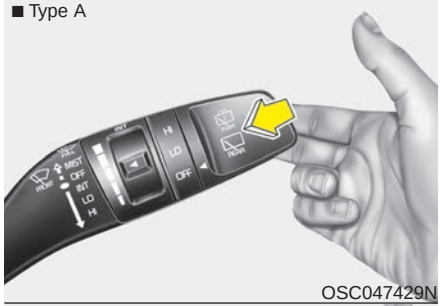

OSC047429N

■ Type B

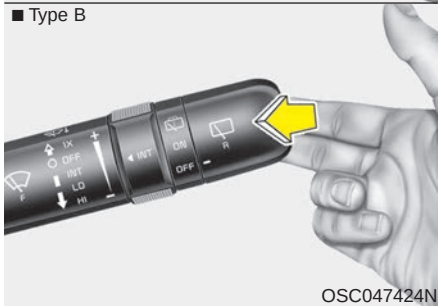

OSC047424N

In the OFF position, pull the lever gently toward you to spray washer fluid on the windshield and to run the wipers 1-3 cycles.

Use this function when the windshield is dirty.

The spray and wiper operation will continue until you release the lever. If the washer does not work, check the washer fluid level.

If the fluid level is not sufficient, you add appropriate non-abrasive windshield washer fluid to the washer reservoir.

The reservoir filler neck is located in the front of the engine compartment on the passenger side.

⚠ CAUTION - Washer pump

To prevent possible damage to the washer pump, do not operate the washer when the fluid reservoir is empty.

⚠ WARNING - Obscured visibility

Do not use the washer in freezing temperatures without first warming the windshield with the defrosters; the washer solution could freeze on the windshield and obscure your vision.

⚠ CAUTION - Wiper position

When washing the vehicle, set the wiper switch in the off position to stop the auto wiper operation. The wiper may operate and be damaged if the switch is set in the AUTO mode while washing the vehicle.

⚠ CAUTION - Wipers & windshields

- ***To prevent possible damage to the wipers or windshield, do not operate the wipers when the windshield is dry.***
- ***To prevent damage to the wiper blades, do not use gasoline, kerosene, paint thinner, or other solvents on or near them.***
- ***To prevent damage to the wiper arms and other components, do not attempt to move the wipers manually.***

Rear window wiper and washer switch (for 5 door)

■ Type A

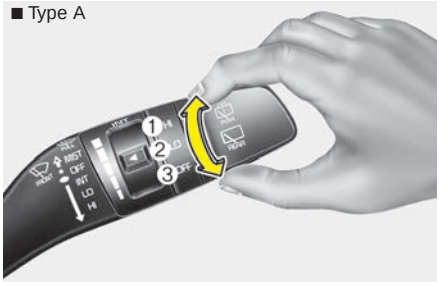

OSC047430N

■ Type B

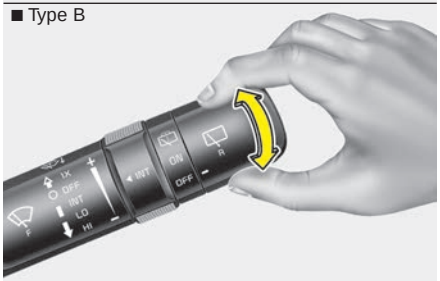

OSC047425N

The rear window wiper and washer switch is located at the end of the wiper and washer switch lever. Turn the switch to operate the rear wiper and washer.

ON - Normal wiper operation

(1) HI - High wiper speed

(2) LO - Low wiper speed

(3) OFF - Wiper is not in operation

■ Type A

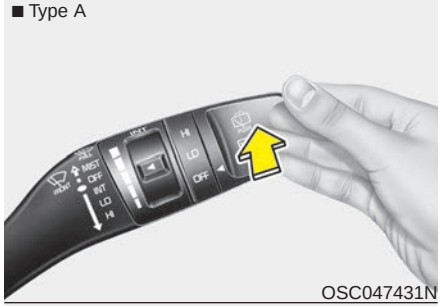

OSC047431N

■ Type B

OSC047426N

Push the lever away from you or turn the wiper lever switch upwards fully to spray rear washer fluid and to run the rear wipers 1~3 cycle. The spray and wiper operation will continue until you release the lever.

INTERIOR LIGHT

Do not use the interior lights for extended periods when the engine is not running.

It may cause battery discharge.

⚠ WARNING - Interior light

Do not use the interior lights when driving in the dark. The glare from the interior lights may obstruct your view and cause an accident.

Automatic turn off function (if equipped)

The interior lights automatically turn off approximately 20 minutes after the ignition switch is turned off.

If your vehicle is equipped with the theft alarm system, the interior lights automatically turn off approximately 5 seconds after the system is in armed stage.

Map lamp (if equipped)

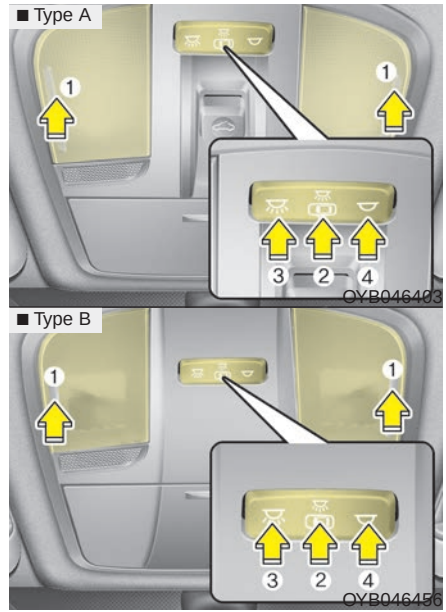

Push the lens (1) to turn the map lamp on or off. This light produces a spot beam for convenient use as a map lamp at night or as a personal lamp for the driver and front passenger.

• DOOR (2) :

In the DOOR position, the map lamp and the room lamp come on when any door is opened regardless of the ignition switch position. When doors are unlocked by the transmitter (or smart key), the map lamp and the room lamp come on for approximately 30 seconds as long as any door is not open.

The map lamp and the room lamp turn off gradually after approximately 30 seconds if the door is closed. However, if the ignition switch is ON or all doors are locked, the map lamp and the room lamp will turn off immediately. If a door is opened with the ignition switch in the ACC or LOCK position, the map lamp and the room lamp stays on for about 20 minutes. However, if a door is opened with the ignition switch in the ON position, the map lamp and the room lamp stays on continuously. If the type B room lamp switch is OFF, it doesn't work.

• ON (3) : The map lamp and the room lamp stay on at all times.

• OFF (4) : The lights turn off even if a door is opened.

✻ NOTICE

When the lamp is turned ON by pressing the lens (1), the lamp does not turn off even if the switch (2) is in the OFF position.

Room lamp

■ Type A

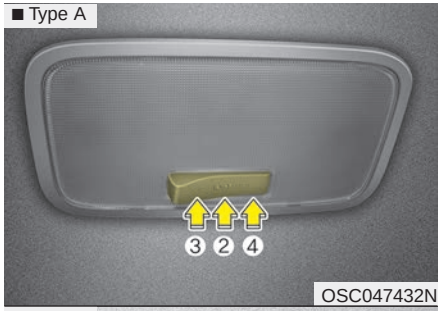

OSC047432N

■ Type B

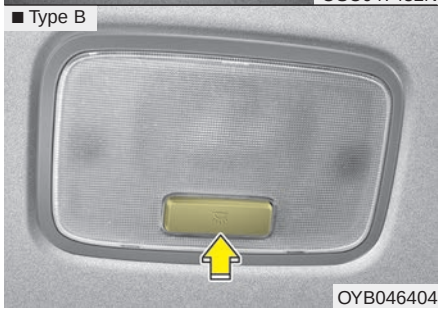

OYB046404

To turn the room lamp ON or OFF, push the switch.

If your vehicle is not equipped with a map lamp, the room lamp will also turn on or off as follows.

- The room lamp comes on when a door is opened. The lamps go out after approximately 30 seconds.
- The room lamp comes on for approximately 30 seconds when doors are unlocked with a transmitter or smart key as long as the doors are not opened.
- The room lamp will stay on for approximately 20 minutes if a door is opened with the ignition switch in the ACC or LOCK/OFF position.
- The room lamp will stay on continuously if the door is opened with the ignition switch in the ON position.
- The room lamp will go out immediately if the ignition switch is changed to the ON position or all doors are locked.

• DOOR (2) :

In the DOOR position, the map lamp and the room lamp come on when any door is opened regardless of the ignition switch position. When doors are unlocked by the transmitter (or smart key), the map lamp and the room lamp come on for approximately 30 seconds as long as any door is not open.

The map lamp and the room lamp turn off gradually after approximately 30 seconds if the door is closed. However, if the ignition switch is ON or all doors are locked, the map lamp and the room lamp will turn off immediately. If a door is opened with the ignition switch in the ACC or LOCK position, the map lamp and the room lamp stays on for about 20 minutes. However, if a door is opened with the ignition switch in the ON position, the map lamp and the room lamp stays on continuously. If the type B room lamp switch is OFF, it doesn't work.

• ON (3) : The map lamp and the room lamp stay on at all times.

• OFF (4) : The lights turn off even if a door is opened.

✻ NOTICE

When the lamp is turned ON by pressing the lens (1), the lamp does not turn off even if the switch (2) is in the OFF position.

Luggage room lamp

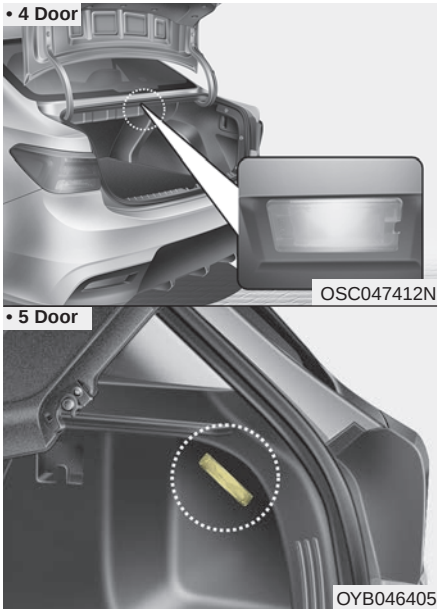

The luggage room lamp comes on when the trunk (tailgate) is opened.

The luggage lamp comes on as long as the trunk lid (tailgate) is open. To prevent unnecessary charging system drain, close the trunk lid (tailgate) securely after using the luggage room.

Glove box lamp

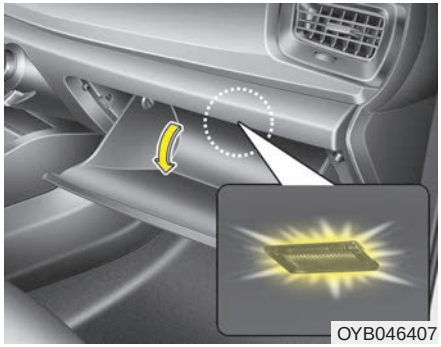

The glove box lamp comes on when the glove box is opened. To prevent unnecessary charging system drain, close the glove box securely after use.

Vanity mirror lamp (if equipped)

Push the switch to turn the light on or off.

- : The lamp will turn on if this button is pressed.
- ◯ : The lamp will turn off if this button is pressed.

⚠ CAUTION

Always have the switch in the off position when the vanity mirror lamp is not in use. If the sunvisor is closed without turning the lamp off, it may discharge the battery or damage the sunvisor.

DEFROSTER

⚠ **CAUTION - Conductors**

To prevent damage to the conductors bonded to the inside surface of the rear window, never use sharp instruments or window cleaners containing abrasives to clean the window.

If you want to defrost and defog the front windshield, refer to “Windshield Defrosting and Defogging” in this section.

Rear window defroster

OYB046324

The defroster heats the window to remove frost, fog and thin ice from the interior and exterior of the rear window, while the engine is running.

To activate the rear window defroster, press the rear window defroster button located in the center facia switch panel. The indicator on the rear window defroster button illuminates when the defroster is on.

If there is heavy accumulation of snow on the rear window, brush it off before operating the rear defroster.

The rear window defroster automatically turns off after approximately 20 minutes or when the ignition switch is turned off. To turn off the defroster manually, press the rear window defroster button again.

Outside mirror defroster (if equipped)

If your vehicle is equipped with the outside rearview mirror defrosters, they will operate at the same time you turn on the rear window defroster.

MANUAL CLIMATE CONTROL SYSTEM

■ **Type A**

■ **Type B**

1. Fan speed control knob
2. Mode selection knob
3. Temperature control knob
4. Air conditioning button (if equipped)
5. Rear window defroster button
6. Air intake control button

OSC047300N/OSC047301N

Heating and air conditioning

1. Start the engine.
2. Set the mode to the desired position.

   To improve the effectiveness of heating and cooling :

   - Heating:
   - Cooling:
3. Set the temperature control to the desired position.
4. Set the air intake control to the outside (fresh) air or recirculated air position.
5. Set the fan speed control to the desired speed.
6. If air conditioning is desired, turn the air conditioning system on.

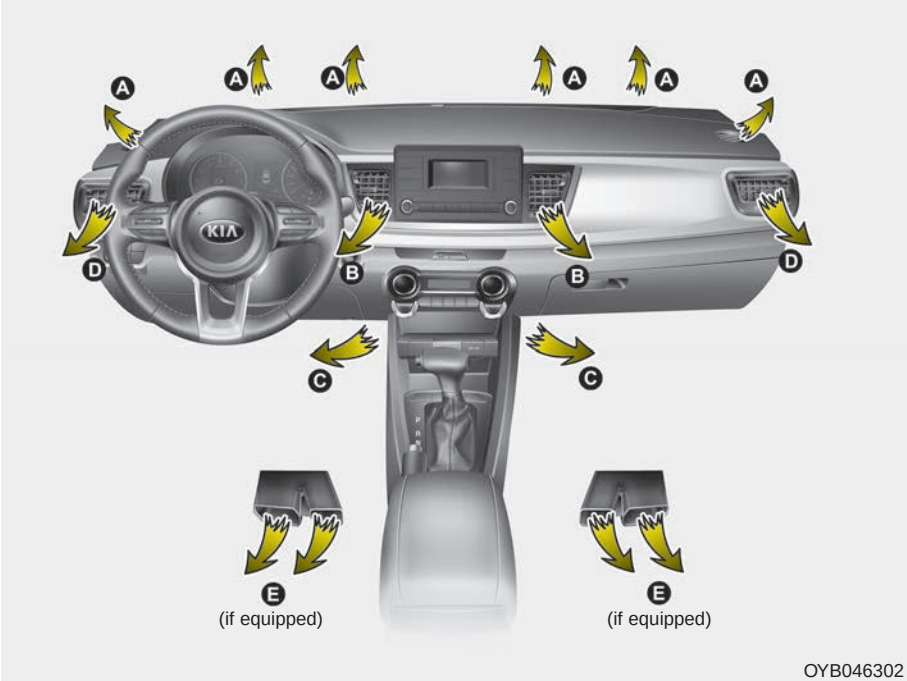

Mode selection

OYB046303

The mode selection knob controls the direction of the air flow through the ventilation system.

Air can be directed to the floor, dashboard outlets, or windshield. Six symbols are used to represent Face, Bi-Level, Floor, Floor-Defrost and Defrost air position.

Face-Level (B, D)

Air flow is directed toward the upper body and face. Additionally, each outlet can be controlled to direct the air discharged from the outlet.

Bi-Level (B, C, D, E)

Air flow is directed towards the face and the floor.

Floor-Level (A, C, D, E)

Most of the air flow is directed to the floor, with a small amount of the air being directed to the windshield and side window defrosters.

Floor/Defrost-Level (A, C, D, E)

Most of the air flow is directed to the floor and the windshield with a small amount directed to the side window defrosters.

Defrost-Level (A, D)

Most of the air flow is directed to the windshield with a small amount of air directed to the side window defrosters.

MAX A/C-Level (B, D) (if equipped)

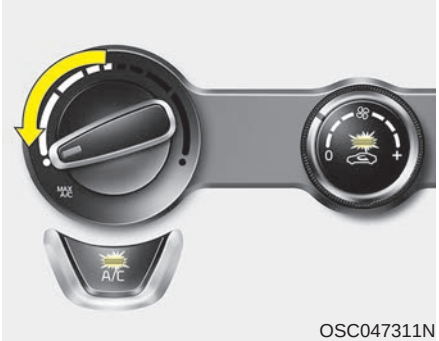

OSC047311N

The MAX A/C mode is used to cool the inside of the vehicle faster. Air flow is directed toward the upper body and face.

In this mode, the air conditioning and the recirculated air position will be selected automatically.

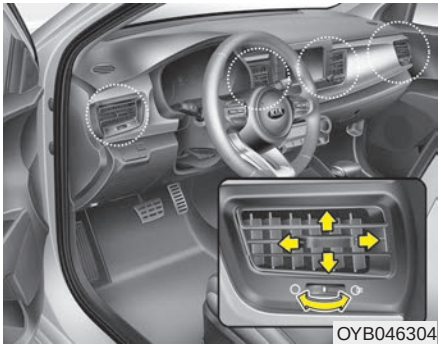

OYB046304

Instrument panel vents

The outlet vents can be opened or closed separately using the thumb-wheel.

Also, you can adjust the direction of air delivered from these vents using the vent control lever as shown.

Temperature control

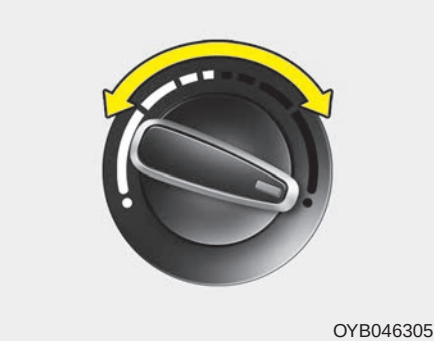

OYB046305

The temperature control knob allows you to control the temperature of the air flowing from the ventilation system. To change the air temperature in the passenger compartment, turn the knob to the right for warm air or left for cooler air.

Air intake control

OSC047312N

This is used to select outside (fresh) air position or recirculated air position.

To change the air intake control position, push the control button.

Recirculated air position

With the recirculated air position selected, air from the passenger compartment will be drawn through the heating system and heated or cooled according to the function selected.

Outside (fresh) air position

If the recirculated air position is not selected or turned off, air enters the vehicle from outside and is heated or cooled according to the function selected.

Prolonged operation of the heater in the recirculated air position (without air conditioning selected) may cause fogging of the windshield and side windows and the air within the passenger compartment may become stale.

In addition, prolonged operation of the air conditioning with the recirculated air position selected will result in excessively dry air in the passenger compartment.

⚠ WARNING - Reduced Visibility

Continuous use of the climate control system in the recirculated air position may allow humidity to increase inside the vehicle which may fog the glass and obscure visibility.

⚠ WARNING - Recirculated Air

Continue using the climate control system in the recirculated air position can cause drowsiness or sleepiness, and loss of vehicle control. Set the air intake control to the outside (fresh) air position as much as possible while driving.

⚠ WARNING - Sleeping with A/C on

Do not sleep in a vehicle with the air conditioning or heating on as this may cause serious harm or death due to a drop in the oxygen level and/or body temperature.

Fan speed control

OSC047313N

The ignition switch must be in the ON position for fan operation.

The fan speed control knob allows you to control the fan speed of the air flowing from the ventilation system. To change the fan speed, turn the knob to the right for higher speed or left for lower speed.

To turn off the blowers

OSC047314N

To turn off the blowers, turn the fan speed control knob to the “0” position.

Air conditioning

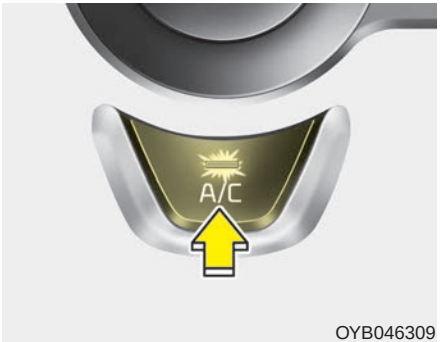

OYB046309

Press the A/C button to turn the air conditioning system on (indicator light will illuminate). Press the button again to turn the air conditioning system off.

System operation

Ventilation

1. Set the mode to the position.
2. Set the air intake control to the outside (fresh) air position.
3. Set the temperature control to the desired position.
4. Set the fan speed control to the desired speed.

Heating

1. Set the mode to the position.
2. Set the air intake control to the outside (fresh) air position.
3. Set the temperature control to the desired position.
4. Set the fan speed control to the desired speed.
5. If dehumidified heating is desired, turn the air conditioning system (if equipped) on.

- If the windshield fogs up, set the mode to the , position.

Operation Tips

- To prevent dust or unpleasant fumes from entering the vehicle through the ventilation system, temporarily set the air intake control to the recirculated air position. Be sure to return the control to the fresh air position when the dust or fumes has passed to keep fresh air in the vehicle. This will help keep the driver alert and comfortable.
- Air for the heating/cooling system is drawn in through the grilles just ahead of the windshield. Care should be taken that these are not blocked by leaves, snow, ice or other obstructions.
- To prevent interior fog on the windshield, set the air intake control to the fresh air position and fan speed to the desired position, turn on the air conditioning system, and adjust the temperature control to desired temperature.

Air conditioning

Kia Air Conditioning Systems are filled with R-1234yf refrigerant.

1. Start the engine. Push the air conditioning button.
2. Set the mode to the position.
3. Set the air intake control to the recirculated air position. However, prolonged operation in the recirculated air position will excessively dry the air. In this case, change the air position.
4. Adjust the fan speed control and temperature control to maintain maximum comfort.

- The refrigerant system should only be serviced by trained and certified technicians to insure proper and safe operation.
- The refrigerant system should be serviced in a well-ventilated place.
- The air conditioning evaporator (cooling coil) shall never be repaired or replaced with one removed from a used or salvaged vehicle and new replacement MAC evaporators should be certified (and labeled) as meeting SAE Standard J2842.

⚠ CAUTION - Excessive A/C

While using the air conditioning system, monitor the temperature gauge closely while driving up hills or in heavy traffic when outside temperatures are high. Air conditioning system operation may cause engine overheating and potential engine damage. Continue to use the blower fan but turn the air conditioning system off if the temperature gauge indicates engine overheating.

✻ NOTICE

When opening the windows in humid weather, air conditioning may create water droplets inside the vehicle. Since excessive water droplets may cause damage to electrical equipment, air conditioning should only be used with the windows closed.

Air conditioning system operation tips

- If the vehicle has been parked in direct sunlight during hot weather, open the windows for a short time to let the hot air inside the vehicle escape.
- To help reduce moisture inside of the windows on rainy or humid days, decrease the humidity inside the vehicle by operating the air conditioning system.
- During air conditioning system operation, you may occasionally notice a slight change in engine speed as the air conditioning compressor cycles. This is a normal system operation characteristic.
- Use the air conditioning system every month only for a few minutes to ensure maximum system performance.
- When using the air conditioning system, you may notice clear water dripping (or even puddling) on the ground under the passenger side of the vehicle. This is a normal system operation characteristic.
- Operating the air conditioning system in the recirculated air position provides maximum cooling, however, continual operation in this mode may cause the air inside the vehicle to become stale.
- During cooling operation, you may occasionally notice a misty air flow because of rapid cooling and humid air intake. This is a normal system operation characteristic.

Climate control air filter

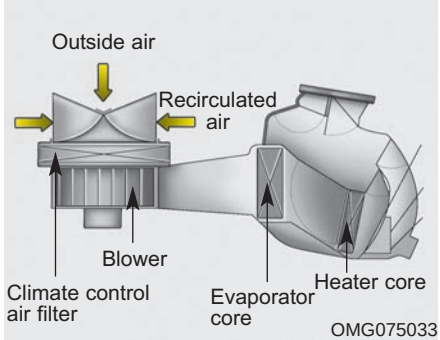

The climate control air filter installed behind the glove box filters the dust or other pollutants that come into the vehicle from the outside through the heating and air conditioning system. If dust or other pollutants accumulate in the filter over a period of time, the air flow from the air vents may decrease, resulting in moisture accumulation on the inside of the windshield even when the outside (fresh) air position is selected. If this happens, have the climate control air filter replaced by an authorized Kia dealer.

✻ NOTICE

- **Replace the filter according to the Maintenance Schedule.**
  If the vehicle is being driven in severe conditions such as dusty, rough roads, more frequent climate control air filter inspections and changes are required.
- **When the air flow rate suddenly decreases, the system should be checked at an authorized Kia dealer.**

Checking the amount of air conditioner refrigerant and compressor lubricant

When the amount of refrigerant is low, the performance of the air conditioning is reduced. Overfilling also has a negative influence on the air conditioning system.

Therefore, if abnormal operation is found, have the system inspected by an authorized Kia dealer.

⚠ WARNING - Vehicles equipped with R-1234yf

Because the refrigerant is mildly inflammable and at very high pressure, the air conditioning system should only be serviced by trained and certified technicians. It is important that the correct type and amount of oil and refrigerant is used.

Otherwise, it may cause damage to the vehicle and personal injury.

⚠ WARNING

The oil and refrigerant in your vehicle's air conditioning system is under very high pressure. If proper service procedures are not followed an explosion may result. To reduce the risk of serious injury or death, the air conditioning system in your vehicle should only be serviced by trained and certified technicians.

⚠ CAUTION

It is important that the correct type and amount of oil and refrigerant is used, otherwise damage to the vehicle may occur.

To prevent damage, the air conditioning system in your vehicle should only be serviced by trained and certified technicians.

The air conditioning system should be serviced by an authorized Kia dealer.

AUTOMATIC CLIMATE CONTROL SYSTEM (IF EQUIPPED)

1. Temperature control knob
2. AUTO (automatic control) button
3. Climate control display
4. Fan speed control knob
5. OFF button
6. Front windshield defroster button
7. Rear window defroster button
8. Mode selection button
9. Air conditioning button (if equipped)
10. Air intake control button

⚠ CAUTION

Operating the blower when the ignition switch is in the ON position could cause the battery to discharge. It is best to operate the blower when the engine is running.

OYB046300

Automatic heating and air conditioning

OYB046313

1. Push the AUTO button. The modes, fan speeds, air intake and air-conditioning will be controlled automatically by temperature setting.

OYB046314

2. Turn the temperature control knob to set the desired temperature.

✻ NOTICE

- **To turn the automatic operation off, select any button or switch of the following:**
  - **Mode selection button**
  - **Air conditioning button**
  - **Front windshield defroster button (Press the button one more time to deselect the front windshield defroster function. The 'AUTO' sign will illuminate on the information display once again.)**
  - **Air intake control button**
  - **Fan speed control knob**

  The selected function will be controlled manually while other functions operate automatically.
- **For your convenience and to improve the effectiveness of the climate control, use the AUTO button and set the temperature to 23°C (73°F).**

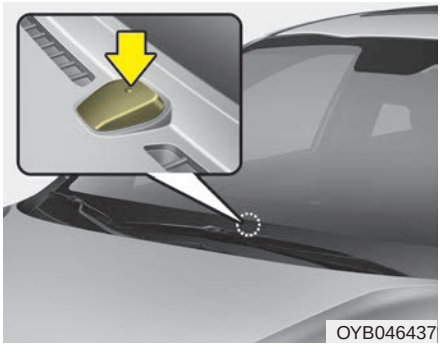

✻ NOTICE

Never place anything over the sensor located on the instrument panel to ensure better control of the heating and cooling system.

Manual heating and air conditioning

The heating and cooling system can be controlled manually by pushing buttons other than the AUTO button. In this case, the system works sequentially according to the order of buttons selected.

1. Start the engine.
2. Set the mode to the desired position.

   To improve the effectiveness of heating and cooling :

   - Heating:
   - Cooling:
3. Set the temperature control to the desired position.
4. Set the air intake control to the outside (fresh) air or recirculated air position.
5. Set the fan speed control to the desired speed.
6. If air conditioning is desired, turn the air conditioning system on.

Press the AUTO button in order to convert to full automatic control of the system.

Mode selection

The mode selection button controls the direction of the air flow through the ventilation system.

Every time you press the mode selection button, the mode will change as follows:

Refer to the illustration in the “Manual climate control system”.

Face-Level (B, D)

Air flow is directed toward the upper body and face. Additionally, each outlet can be controlled to direct the air discharged from the outlet.

Bi-Level (B, C, D, E)

Air flow is discharged towards the face and floor.

Floor-Level (C, A, D, E)

Most of the air flow is directed to the floor, with a small amount of the air being directed to the windshield and side window defroster.

Floor/Defrost-Level (A, C, D, E)

Most of the air flow is directed to the floor and the windshield with a small amount directed to the side window defrosters.

OYB046321

Defrost-level

Most of the air flow is directed to the windshield with a small amount of air directed to the side window defrosters.

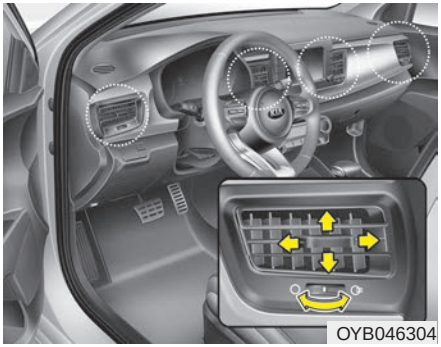
OYB046304

Instrument panel vents

The outlet vents can be opened or closed separately using the thumb-wheel.

Also, you can adjust the direction of air delivered from these vents using the vent control lever as shown.

Temperature control

OYB046314

The temperature control knob allows you to control the temperature of the air flowing from the ventilation system. To change the air temperature in the passenger compartment, turn the knob to the right for warm air or left for cooler air.

Air intake control

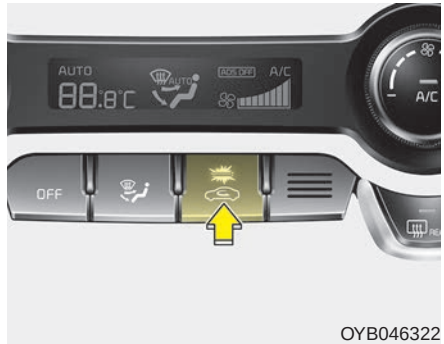

OYB046322

The air intake control is used to select outside (fresh) air position or recirculated air position.

To change the air intake control position, push the control button.

Recirculated air position

With the recirculated air position selected, air from the passenger compartment will be drawn through the heating system and heated or cooled according to the function selected.

Outside (fresh) air position

If the recirculated air position is not selected or turned off, air enters the vehicle from outside and is heated or cooled according to the function selected.

Prolonged operation of the heater in the recirculated air position (without air conditioning selected) may cause fogging of the windshield and side windows and the air within the passenger compartment may become stale.

In addition, prolonged operation of the air conditioning with the recirculated air position selected will result in excessively dry air in the passenger compartment.

⚠ WARNING - Reduced Visibility

Continuous use of the climate control system in the recirculated air position may allow humidity to increase inside the vehicle which may fog the glass and obscure visibility.

⚠ WARNING - Sleeping with A/C on

Do not sleep in a vehicle with the air conditioning or heating system on as this may cause serious harm or death due to a drop in the oxygen level and/or body temperature.

⚠ WARNING - Recirculated air

Continued use of the climate control system in the recirculated air position can cause drowsiness or sleepiness, and loss of vehicle control. Set the air intake control to the outside (fresh) air position as much as possible while driving.

Fan speed control

OYB046315

The fan speed can be set to the desired speed by operating the fan speed control knob.

The higher the fan speed is, the more air is delivered.

Pressing the OFF button turns off the fan.

Air conditioning

OYB046316

Press the A/C button to turn the air conditioning system on (indicator light will illuminate).

Press the button again to turn the air conditioning system off.

OFF mode

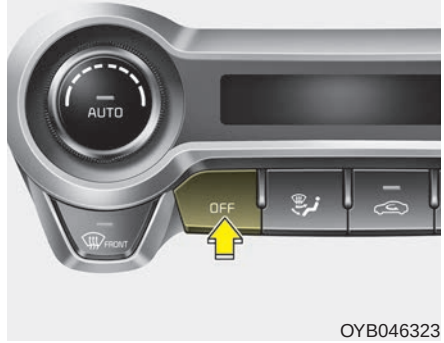

OYB046323

Press the OFF button to turn off the air climate control system. However you can still operate the mode and air intake buttons as long as the ignition switch is in the ON position.

System operation

Ventilation

1. Set the mode to the position.
2. Set the air intake control to the outside (fresh) air position.
3. Set the temperature control to the desired position.
4. Set the fan speed control to the desired speed.

Heating

1. Set the mode to the position.
2. Set the air intake control to the outside (fresh) air position.
3. Set the temperature control to the desired position.
4. Set the fan speed control to the desired speed.
5. If dehumidified heating is desired, turn the air conditioning system (if equipped) on.

- If the windshield fogs up, set the mode to the or position.

Operation Tips

- To keep dust or unpleasant fumes from entering the vehicle through the ventilation system, temporarily set the air intake control to the recirculated air position. Be sure to return the control to the fresh air position when the dust or fumes has passed to keep fresh air in the vehicle. This will help keep the driver alert and comfortable.
- Air for the heating/cooling system is drawn in through the grilles just ahead of the windshield. Care should be taken that these are not blocked by leaves, snow, ice or other obstructions.
- To prevent interior fog on the windshield, set the air intake control to the fresh air position and fan speed to the desired position, turn on the air conditioning system, and adjust the temperature control to desired temperature.

Air conditioning

Kia Air Conditioning Systems are filled with R-1234yf refrigerant.

1. Start the engine. Press the air conditioning button.
2. Set the mode to the position.
3. Set the air intake control to the outside air or recirculated air position.
4. Adjust the fan speed control and temperature control to maintain maximum comfort.

- The refrigerant system should only be serviced by trained and certified technicians to insure proper and safe operation.
- The refrigerant system should be serviced in a well-ventilated place.
- The air conditioning evaporator (cooling coil) shall never be repaired or replaced with one removed from a used or salvaged vehicle and new replacement MAC evaporators should be certified (and labeled) as meeting SAE Standard J2842.

⚠ **CAUTION**

- ***When using the air conditioning system, monitor the temperature gauge closely while driving up hills or in heavy traffic when outside temperatures are high. Air conditioning system operation may cause engine overheating. Continue to use the blower fan but turn the air conditioning system off if the temperature gauge indicates engine overheating.***
- ***When opening the windows in humid weather air conditioning may create water droplets inside the vehicle. Since excessive water droplets may cause damage to electrical equipment, air conditioning should only be used with the windows closed.***

Air conditioning system operation tips

- If the vehicle has been parked in direct sunlight during hot weather, open the windows for a short time to let the hot air inside the vehicle escape.
- To help reduce moisture inside of the windows on rainy or humid days, decrease the humidity inside the vehicle by operating the air conditioning system.
- During air conditioning system operation, you may occasionally notice a slight change in engine speed as the air conditioning compressor cycles. This is a normal system operation characteristic.
- Use the air conditioning system every month only for a few minutes to ensure maximum system performance.
- When using the air conditioning system, you may notice clear water dripping (or even puddling) on the ground under the passenger side of the vehicle. This is a normal system operation characteristic.
- Operating the air conditioning system in the recirculated air position provides maximum cooling, however, continual operation in this mode may cause the air inside the vehicle to become stale.
- During cooling operation, you may occasionally notice a misty air flow because of rapid cooling and humid air intake. This is a normal system operation characteristic.
- If you operate air conditioner excessively, the difference between the temperature of the outside air and that of the windshield could cause the outer surface of the windshield to fog up, causing loss of visibility. In this case, set the mode selection knob or button to the position and fan speed control to the lower speed.

WINDSHIELD DEFROSTING AND DEFOGGING

⚠ WARNING - Windshield heating

Do not use the ( ) or ( ) position during cooling operation in extremely humid weather. The difference between the temperature of the outside air and the windshield could cause the outer surface of the windshield to fog up, causing loss of visibility.

- For maximum defrosting, set the temperature control to the extreme right/hot position and the fan speed control to the highest speed.
- If warm air to the floor is desired while defrosting or defogging, set the mode to the floor-defrost position.
- Before driving, clear all snow and ice from the windshield, rear window, outside rear view mirrors, and all side windows.
- Clear all snow and ice from the hood and air inlet in the cowl grill to improve heater and defroster efficiency and to reduce the probability of fogging up the inside of the windshield.

Manual climate control system

To defog inside windshield

1. Select any fan speed except "0" position.
2. Select desired temperature.
3. Select the or position.
4. The outside (fresh) air will be selected automatically.

If the outside (fresh) air position is not selected automatically, press the corresponding button manually.

To defrost outside windshield

1. Set the fan speed to the highest (extreme right) position.
2. Set the temperature to the extreme hot position.
3. Select the position.
4. The outside (fresh) air will be selected automatically.

Automatic climate control system

To defog inside windshield

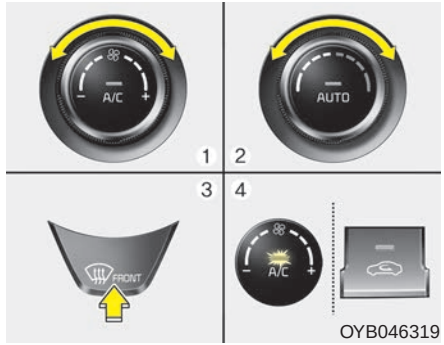

1. Select desired fan speed.
2. Select desired temperature.
3. Press the defroster button ( ).
4. The outside (fresh) air position will be selected automatically.

If the outside (fresh) air position is not selected automatically, adjust the corresponding button manually.

If the position is selected, lower fan speed is adjusted to a higher fan speed.

To defrost outside windshield

1. Set the fan speed to the highest position.
2. Set the temperature to the extreme hot (HI) position.
3. Press the defroster button ( ).
4. The outside (fresh) air position will be selected automatically.

If the position is selected, lower fan speed is adjusted to a higher fan speed.

Defogging Logic

To reduce the probability of fogging up inside of the windshield, the air intake or air conditioning are controlled automatically according to certain conditions such as or position. Logic can be disabled and enabled by doing following :

Manual climate control system

1. Turn the ignition switch to the ON position.
2. Turn the mode selection knob to the defrost position ( ).
3. Select any fan speed except “0” position.
4. While pressing the air conditioning button (A/C), press the air intake control button ( ) at least 5 times within 3 seconds.

The indicator light in the air intake control button will blink 3 times with 0.5 second of interval. It indicates that the defogging logic is canceled or returned to the programmed status.

If the battery has been discharged or disconnected, it resets to the defog logic status.

Automatic climate control system

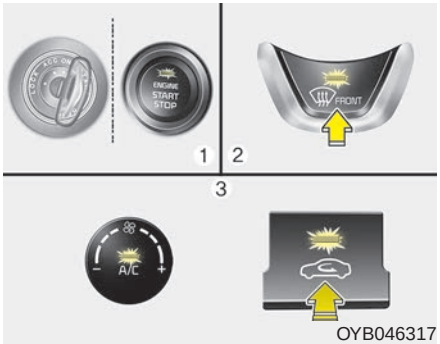

OYB046317

1. Turn the ignition switch to the ON position.
2. Select the defroster position before pressing the defroster button ( ).
3. While pressing the air conditioning button (A/C), press the air intake control button ( ) at least 5 times within 3 seconds.

The indicator on the air intake button blinks 3 times with 0.5 seconds of interval. It indicates that the defogging logic is canceled or returned to the programmed status.

If the battery has been discharged or disconnected, it resets to the defog logic status.

Auto defogging system (if equipped)

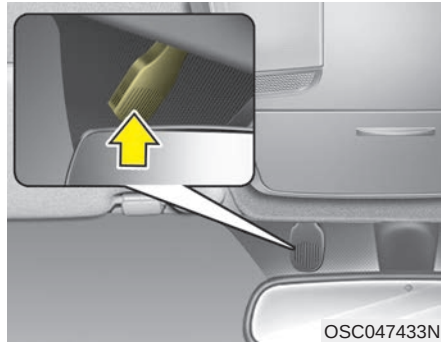
OSC047433N

Auto defogging reduces the possibility of fogging up the inside of the windshield by automatically sensing the moisture inside the windshield and air flow toward the windshield can increase.

The auto defogging system operates when the AUTO mode is on.

This indicator illuminates when the auto defogging system senses the moisture of inside the windshield and operates.

If more moisture is in the vehicle, the auto defogging system addresses excess moisture on the inside of the windshield in stages as follows:

Step 1 : Operating the air conditioning

Step 2 : Outside air position

Step 3 : Blowing air flow toward the windshield

Step 4 : Increasing air flow toward the windshield

If your vehicle is equipped with the auto defogging system, it is automatically activated when the conditions are met.

However, if you would like to deactivate the auto defogging system, keep the front defroster button pressed longer than 3 seconds.

The “ADS OFF” symbol will be shown in the climate display to inform you that the system is deactivated.

To re-activate the auto defogging system again, follow the procedure mentioned above and the “ADS OFF” symbol will disappear.

If the battery has been disconnected or discharged, it resets to the auto defogging status.

✻ NOTICE

- **When the air conditioning is turned on by Auto defogging system, if you try to turn off the air conditioning, the indicator will blink 3 times and the air conditioning will not be turned off.**
- **For efficiency, do not select recirculated air position while Auto defogging system is operating.**

⚠ CAUTION

Do not remove the sensor cover located on the upper end of the driver side windshield glass. Damage to the system parts could occur and may not be covered by your vehicle warranty.

STORAGE COMPARTMENT

These compartments can be used to store small items.

To avoid possible theft, do not leave valuables in the storage compartment.

Always keep the storage compartment covers closed while driving.

⚠ WARNING - Flammable materials

Do not store flammable/explosive materials in the vehicle. These items may catch fire and/or explode if the vehicle is exposed to hot temperatures for extended periods.

Center console storage (if equipped)

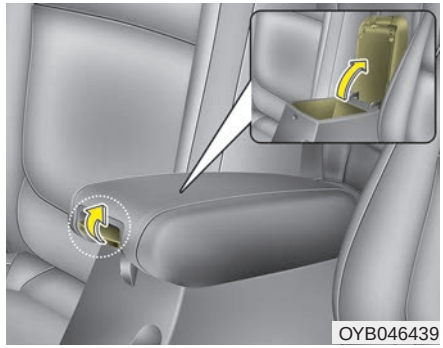

To open the center console storage, pull up the lever.

Glove box

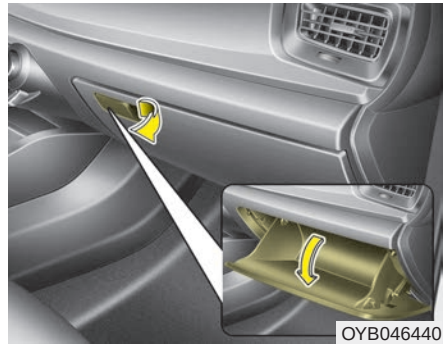

To open the glove box, pull the handle and the glove box will automatically open. Close the glove box after use.

Always keep the glove box closed while the vehicle is in motion.

⚠ WARNING - Glove box

To reduce the risk of injury in an accident or sudden stop, always keep the glove box door closed while driving.

Sunglass holder (if equipped)

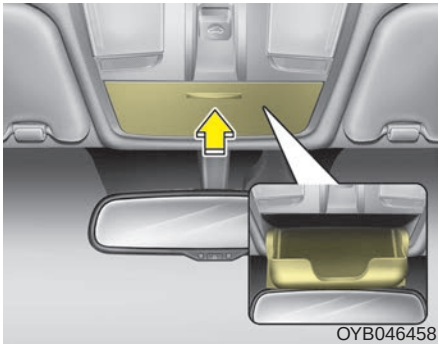
OYB046458

To open the sunglass holder, press the cover and the holder will slowly open. Place your sunglasses with the lenses facing out. To close the sunglass holder, push it up.

⚠ WARNING

Do not open the sunglass holder while the vehicle is moving. The rear view mirror of the vehicle can be blocked by an open sunglass holder.

⚠ WARNING - Sunglass holder

Do not keep objects except sunglasses inside the sunglass holder. Heavier objects can be thrown from the holder in the event of a sudden stop or an accident, possibly injuring the passengers.

Luggage net holder (if equipped)

OUB041147

To keep items from shifting in the cargo area, you can use the 4 holders located in the cargo area to attach the luggage net.

If necessary, we recommend that you contact an authorized Kia dealer.

⚠ CAUTION

To prevent damage to the goods or the vehicle, care should be taken when carrying fragile or bulky objects in the luggage compartment.

⚠ WARNING

To avoid bodily injury, DO NOT overstretch the luggage net and ALWAYS keep your face and body out of the luggage net's recoil path. DO NOT use when the strap has visible signs of wear or damage.

INTERIOR FEATURES

Cup holder

⚠ WARNING - Hot liquids

Do not place uncovered cups of hot liquid in the cup holder while the vehicle is in motion. If the hot liquid spills, you may burn yourself. Such a burn to the driver could lead to loss of control of the vehicle.

⚠ CAUTION

Keep your drinks sealed while driving to prevent spilling your drink. If liquid spills, it may get into the vehicle's electrical/electronic system and damage electrical/electronic parts.

✻ NOTICE

When cleaning spilled liquids, do not dry the cup holder at high temperature. This may damage the cup holder.

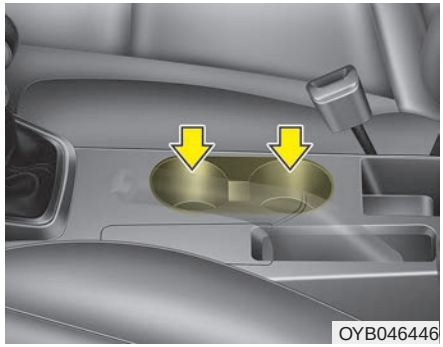

Cups or small beverage cans may be placed in the cup holders.

Sunvisor

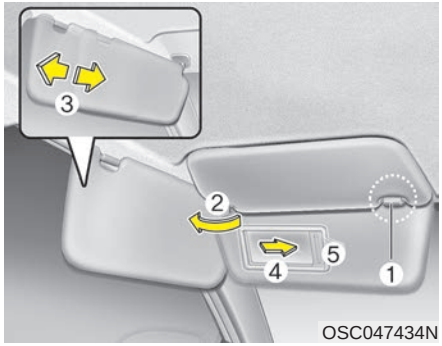

Use the sunvisor to shield direct light through the front or side windows.

To use the sunvisor, pull it downward.

To use the sunvisor for the side window, pull it downward, unsnap it from the bracket (1) and swing it to the side (2).

Adjust the sunvisor extension forward or backward (3).

To use the vanity mirror, pull down the visor and slide the mirror cover (4).

The ticket holder (5) is provided for holding a tollgate ticket (if equipped).

⚠ **CAUTION - Vanity mirror lamp**

Close the vanity mirror cover securely and return the sunvisor to its original position after use. If the vanity mirror is not closed securely, the lamp will stay on and could result in battery discharge and possible sunvisor damage.

Seat warmer (if equipped)

The seat warmer is provided to warm the front seats during cold weather.

With the ignition switch in the ON position, push either of the switches to warm the driver's seat or the front passenger's seat.

During mild weather or under conditions where the operation of the seat warmer is not needed, keep the switches in the OFF position.

- Each time you push the button, the temperature setting of the seat is changed as follows :

OFF→HIGH( )→MIDDLE( )→LOW( )

- The seat warmer defaults to the OFF position whenever the ignition switch is turned on.

✻ NOTICE

With the seat warmer switch in the ON position, the heating system in the seat turns off or on automatically depending on the seat temperature.

⚠ CAUTION - Seat damage

- ***When cleaning the seats, do not use an organic solvent such as thinner, benzene, alcohol and gasoline. Doing so may damage the surface of the heater or seats.***
- ***To prevent overheating the seat warmer, do not place anything on the seats that insulates against heat, such as blankets, cushions or seat covers while the seat warmer is in operation.***
- ***Do not place heavy or sharp objects on seats equipped with seat warmers. Damage to the seat warming components could occur.***

⚠ WARNING - Seat warmer burns

The seat warmer may cause burns even at low temperatures, especially if used for long periods of time. The occupants must be able to feel if the seat is becoming too warm and to turn the seat warmer off.

In particular, the driver must exercise extreme care for the following types of passengers:

1. **Infants, children, elderly or disabled persons, or hospital outpatients**
2. **Persons with sensitive skin or those that burn easily**
3. **Fatigued individuals**
4. **Intoxicated individuals**
5. **Individuals taking medication that can cause drowsiness or sleepiness (sleeping pills, cold tablets, etc.)**

Power outlet (if equipped)

OSC047442N

The power outlet is designed to provide power for mobile telephones or other devices designed to operate with vehicle electrical systems. The devices should draw less than 12V, 15A with the engine running.

Use the power outlet only when the engine is running and remove the accessory plug after use. Using the accessory plug for prolonged periods of time with the engine off could cause the battery to discharge.

Only use 12V electric accessories which are less than 15A in electric capacity.

Adjust the air-conditioner or heater to the lowest operating level when using the power outlet.

Close the cover when not in use.

Some electronic devices can cause electronic interference when plugged into a vehicle's power outlet. These devices may cause excessive audio static and malfunctions in other electronic systems or devices used in your vehicle.

Using electrical products which exceed the limited capacity might cause heating to the power outlet and wiring that could lead to an electrical breakdown. Always make sure the electrical part is firmly plugged into the power outlet. Incomplete plugging may cause electrical breakdown.

Electrical products with a built-in battery might cause current flow, which could lead to malfunction of the electric/electronic device in your vehicle. Only use electrical products which include reverse current prevention

⚠ WARNING - Electric shock

Do not put a finger or a foreign object (pen, etc.) into a power outlet and do not touch with a wet hand. You may receive an electric shock.

USB charger (if equipped)

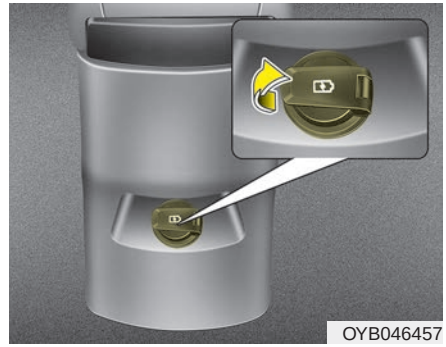

The USB charger is designed to recharge batteries of small size electrical devices using a USB cable. The electrical devices can be recharged when the Engine Start/Stop button is in ACC/ON/START position.

The battery charging state may be monitored on the electrical device.

Disconnect the USB cable from the USB port after use.

- Some devices are not supported for fast charging but will be charged with normal speed.
- Use the USB charger when the engine is running to prevent battery discharge.
- Only devices that fit the USB port can be used.
- The USB charger can be used only for battery charging purposes.
- Battery chargers cannot be charged.

Clothes hanger (if equipped)

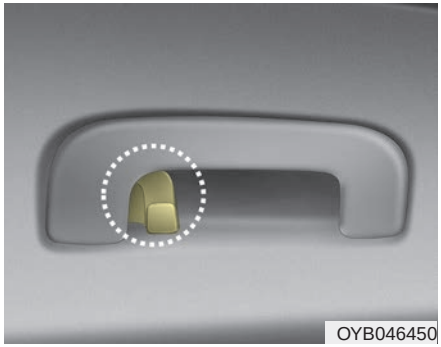

The clothes hanger is located on the roof of the rear seats.

⚠ CAUTION - Hanging clothing

Do not hang heavy clothes, since those may damage the hook.

⚠ WARNING

Do not hang other objects such as hangers or hard objects except clothes. Also, do not put heavy, sharp or breakable objects in the clothe pockets. In an accident or when the curtain air bag is inflated, it may cause vehicle damage or personal injury.

Floor mat anchor(s)

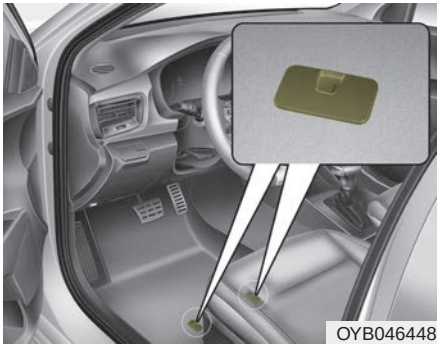
OYB046448

When using a floor mat on the floor carpet, make sure it attaches to the floor mat anchor(s) in the front and rear floor carpet of your vehicle. This keeps the floor mat from sliding forward.

⚠ WARNING - Aftermarket floor mat

Do not install aftermarket floor mats that are not capable of being securely attached to the vehicle's floor mat anchors. Unsecured floor mats can interfere with pedal operation.

The following must be observed when installing ANY floor mat in the vehicle.

- Ensure that the floor mats are securely attached to the vehicle's floor mat anchor(s) before driving the vehicle.
- Do not use ANY floor mat that cannot be firmly attached to the vehicle's floor mat anchors.
- Do not stack floor mats on top of one another (e.g. ,all-weather rubber mat on top of a carpeted floor mat). Only a single floor mat should be installed in each position.

✻ NOTICE

Your vehicle was manufactured with driver's side floor mat anchors that are designed to securely hold the floor mat in place. To avoid any interference with pedal operation, Kia recommends that only the Kia floor mat designed for use in your vehicle be installed.

Shopping bag holder (if equipped)

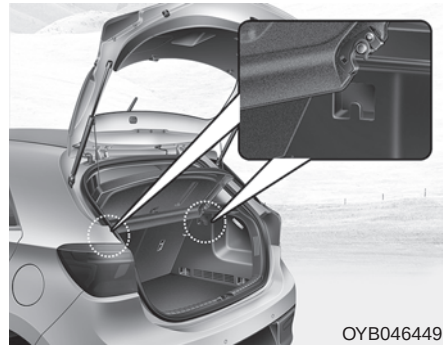
OYB046449

⚠ CAUTION

- ***Do not hang a bag weighing more than 3 kg (7 lbs.). It may cause damage to the shopping bag holder.***
- ***Do not hang a bag with frail objects when you drive on a rough road as the objects may be damaged.***

Covering shelf (for 5 Door)

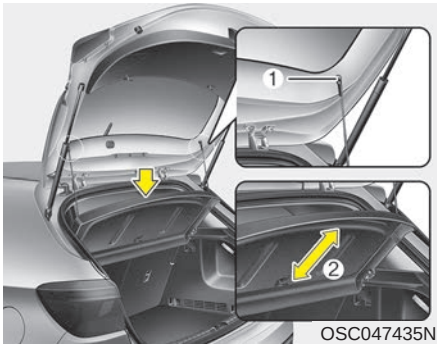

OSC047435N

Use the cover to hide items stored in the cargo area.

The covering shelf will be lifted when the tailgate is opened. Disconnect the strap (1) from holder if you want to return the cover to original position. To remove the covering shelf completely, lift the cover to a 43-degree angle and pull it out to the full (2). For installation of the cover, reverse the removal procedure.

When you return the covering shelf to its original position, hold the cover and lower it.

⚠ CAUTION

- ***Do not operate the vehicle with the cover removed. It may damage the cover.***
- ***Since the covering shelf may be damaged or malformed, do not apply excessive force to the cover.***

⚠ WARNING

Do not place objects on the covering shelf while driving. Such objects may be thrown about inside the vehicle and possibly injure vehicle occupants during an accident or when braking.

Never allow anyone to ride in the luggage compartment. It is designed for luggage only.

Maintain the balance of the vehicle and locate the weight as far forward as possible.

Audio system

Audio system 5-2
- **Antenna 5-2**
- **AUX, USB port 5-3**
- **How vehicle audio works 5-3**

Audio (with touch screen) 5-8
- **Feature of your audio 5-9**
- **Radio. 5-15**
- **SiriusXM 5-18**
- **Media 5-20**
- **Phone 5-30**
- **Setup 5-39**

Declaration of conformity 5-42
- **IC 5-42**

AUDIO SYSTEM

✻ NOTICE

If you install an aftermarket HID head lamp, your vehicle's audio and electronic device may malfunction.

Antenna

Roof antenna

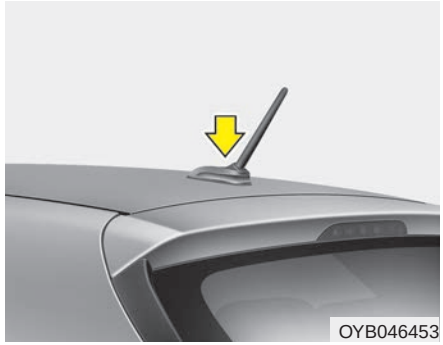

Your car uses a roof antenna to receive both AM and FM broadcast signals. This antenna is a removable type.

To remove the antenna, turn it counterclockwise. To install the antenna, turn it clockwise.

When reinstalling your antenna, it is important that it is fully tightened and adjusted to the upright position to ensure proper reception. But it could be removed when parking the vehicle or when loading cargo on the roof rack.

When cargo is loaded on the roof rack, do not place the cargo near the antenna pole to ensure proper reception.

⚠ CAUTION

Before entering a place with a low height clearance or a car wash, remove surely the antenna by rotating it counter-clockwise. If not, the antenna may be damaged.

AUX, USB port (if equipped)

OSC047443N

You can use the AUX port to connect audio devices and the USB port to plug in a USB device or iPod®.

✻ NOTICE

When using a portable audio device connected to the power outlet, noise may occur during playback. If this happens, use the power source of the portable audio device.

How vehicle audio works

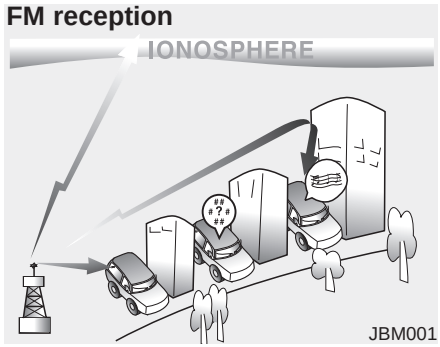

AM and FM radio signals are broadcast from transmitter towers located around your city. They are intercepted by the radio antenna on your vehicle. This signal is then received by the radio and sent to your vehicle speakers.

When a strong radio signal has reached your vehicle, the precise engineering of your audio system ensures the best possible quality reproduction. However, in some cases the signal coming to your vehicle may not be strong and clear.

This can be due to factors, such as the distance from the radio station, closeness of other strong radio stations or the presence of buildings, bridges or other large obstructions in the area.

AM reception

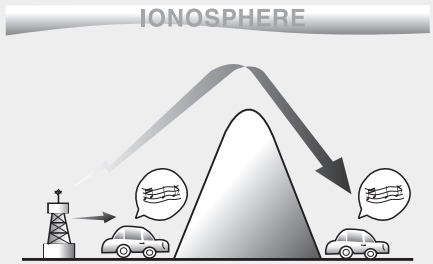

JBM002

AM broadcasts can be received at greater distances than FM broadcasts. This is because AM radio waves are transmitted at low frequencies. These long, low frequency radio waves can follow the curvature of the earth rather than travelling straight out into the atmosphere. In addition, they curve around obstructions so that they can provide better signal coverage.

FM radio station

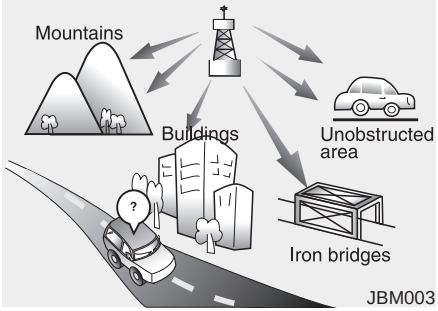

JBM003

FM broadcasts are transmitted at high frequencies and do not bend to follow the earth's surface. Because of this, FM broadcasts generally begin to fade at short distances from the station. Also, FM signals are easily affected by buildings, mountains, or other obstructions. These can result in certain listening conditions which might lead you to believe a problem exists with your radio. The following conditions are normal and do not indicate radio trouble:

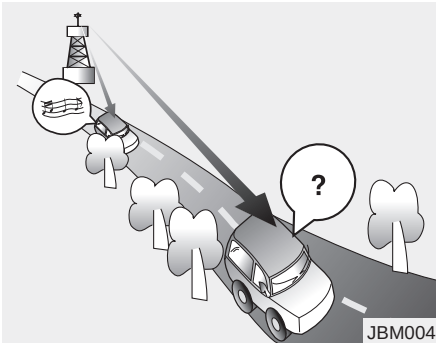

JBM004

- Fading - As your vehicle moves away from the radio station, the signal will weaken and sound will begin to fade. When this occurs, we suggest that you select another stronger station.
- Flutter/Static - Weak FM signals or large obstructions between the transmitter and your radio can disturb the signal causing static or fluttering noises to occur. Reducing the treble level may lessen this effect until the disturbance clears.

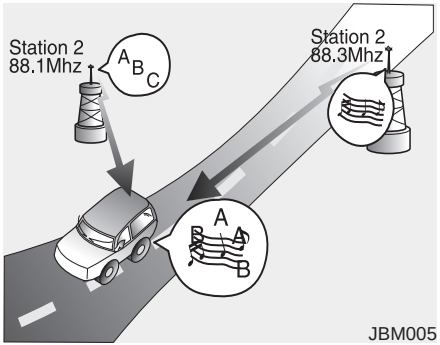

- Station Swapping - As a FM signal weakens, another more powerful signal near the same frequency may begin to play. This is because your radio is designed to lock onto the clearest signal. If this occurs, select another station with a stronger signal.
- Multi-Path Cancellation - Radio signals being received from several directions can cause distortion or fluttering. This can be caused by a direct and reflected signal from the same station, or by signals from two stations with close frequencies. If this occurs, select another station until the condition has passed.

Using a cellular phone or a two-way radio

When a cellular phone is used inside the vehicle, noise may be produced from the audio system. This does not mean that something is wrong with the audio equipment. In such a case, use the cellular phone at a place as far as possible from the audio equipment.

When using a communication system such as a cellular phone or a radio set inside the vehicle, a separate external antenna must be fitted. When a cellular phone or a radio set is used with an internal antenna alone, it may interfere with the vehicle's electrical system and adversely affect safe operation of the vehicle.

⚠ WARNING

Do not use a cellular phone while driving. Stop at a safe location to use a cellular phone.

⚠ WARNING - Distracted driving

Driving while distracted can result in a loss of vehicle control that may lead to an accident, severe personal injury, and death. The driver's primary responsibility is in the safe and legal operation of a vehicle, and use of any handheld devices, other equipment, or vehicle systems which take the driver's eyes, attention and focus away from the safe operation of a vehicle or which are not permissible by law should never be used during operation of the vehicle.

⚠ WARNING - Audio System

Do not disassemble, assemble, or modify this audio system. Such acts could result in fire or electric shock.

⚠ WARNING - Antenna

Do not touch the antenna during thunder or lightening as such acts may lead to lightning induced electric shock.

iPod®

iPod® is a trademark of Apple Inc.

Bluetooth® Wireless Technology

A compatible *Bluetooth®* Wireless Technology-enabled cell phone is required to use *Bluetooth®* Wireless Technology.

The Bluetooth® word mark and logos are registered trademarks owned by Bluetooth SIG, Inc. and any use of such marks by Kia is under license.

Other trademarks and trade names are those of their respective owners.

A Bluetooth® enabled cell phone is required to use *Bluetooth®* Wireless Technology.

Bluetooth® Wireless Technology phone compatibility can be checked by visiting http://www.kia.com.

AUDIO (With Touch Screen)

(With *Bluetooth*® Wireless Technology)

H8H4G0001EC

Feature of Your Audio

Head Unit

❊ The actual image in the vehicle may differ from the illustration.

(1) **LCD screen**

- Tap the screen to select a button.

(2) **RADIO**

- Start FM, AM and SiriusXM.

(3) **MEDIA**

- Select USB(iPod®), *Bluetooth®* Wireless Technology(BT) Audio or AUX.
- Display the media menu when two or more media are connected or when the **[MEDIA]** button is pressed in media mode.

(4) **PHONE**

- Start *Bluetooth®* Wireless Technology Phone mode.

(5) **POWER/VOL** knob

- Turn to adjust the volume.
- Press to turn the device on or off.

(6) **RESET**

- Shutdown and restart the system.

(7) **SEEK/TRACK**

- Search for frequencies in radio mode.
- Change the current song in media mode.

(8) **DISP**

- Turn the display on or off.

(9) **CLOCK**

- Display the time/date/day.

(10) **SETUP**

- Access Display, Sound, Date/Time, Bluetooth, System, Screen Saver and Display Off settings.

(11) **TUNE** knob

- Turn to navigate through the stations/songs list.
- Press to select an item.

⚠ WARNING

- Clock Setting Distraction

Do not adjust the clock while driving. You may lose your steering control and cause severe personal injury or accidents.

Steering wheel remote control

(*Bluetooth®* Wireless Technology equipped model)

❊ The actual image in the vehicle may differ from the illustration.

(1) **MODE**

- Press the button to change the mode in the following order: Radio ➟ Media.
- Press and hold the button to turn off.

(2) **VOLUME**

- Press to adjust the volume.

(3) **UP/DOWN**

- Press the button in radio mode to search Presets.
- Press and hold the button in radio mode to search frequencies.
- Press the button in media mode to change the current song.
- Press and hold the button in media mode to quick search through songs.

(4) **MUTE**

- Press to mute audio output.

(5) **CALL**

- Pressing the button
  - If not in *Bluetooth®* Wireless Technology Handsfree mode or receiving a phone call.

    First press: Display Dial Number screen.

    Second press: Automatically display the most recently Dialed call number.

    Third press: Dial the phone number entered.
  - Press in the Incoming Call notification screen to accept the phone call.
  - Press in *Bluetooth®* Wireless Technology Handsfree mode to switch to the waiting call.

- Pressing and holding the button
  - If not in *Bluetooth®* Wireless Technology Handsfree mode or receiving a phone call, the most recently Dialed Call number is dialed.
  - Press in *Bluetooth®* Wireless Technology Handsfree mode to transfer the call to your cell phone.
  - Press in cell phone mode to switch to *Bluetooth®* Wireless Technology Handsfree mode.

(6) **END**

- Press in *Bluetooth®* Wireless Technology Handsfree mode to end the phone call.
- Press in the incoming call screen to reject the call.

⚠ WARNING

Driving while distracted can result in a loss of vehicle control that may lead to an accident, severe personal injury, and death. The driver's primary responsibility is in the safe and legal operation of a vehicle, and use of any handheld devices, other equipment, or vehicle systems which take the driver's eyes, attention and focus away from the safe operation of a vehicle or which are not permissible by law should never be used during operation of the vehicle.

- Adjust the volume to levels that allow the driver to hear sounds from outside of the vehicle. Driving in a state where external sounds cannot be heard may lead to accidents.
- Pay attention to the volume setting when turning the device on. A sudden output of extreme volume upon turning the device on could lead to hearing impairment. (Adjust the volume to a suitable levels before turning off the device.)
- Turn on the car ignition before using this device. Do not operate the audio system for long periods of time with the ignition turned off as such operations may lead to battery discharge.
- In case of product malfunction, please contact your place of purchase or After Service center.
- Placing the audio system within an electromagnetic environment may result in noise interference.

⚠ **CAUTION - LCD Monitor**

Do not subject the device to severe shock or impact. Direct pressure onto the front side of the monitor may cause damage to the LCD or touch screen.

⚠ **CAUTION**

- ***When cleaning the device, make sure to turn off the audio system and use a dry and smooth cloth.***
- ***Do not place beverages close to the audio system. Spilling beverages may lead to system malfunction.***
- ***Never use tough materials, chemical cloths, or solvents (alcohol, benzene, thinners, etc.) as such materials may damage the device panel or cause color/quality deterioration.***
- ***Prevent caustic solutions such as perfume and cosmetic oil from contacting the dashboard because they may cause damage or discoloration.***
- ***Refrain from use if the screen is blank or no sound can be hear as these signs may indicate product malfunction.***

  Continued use in this condition may further damage the system.

Information on status icons

Icons showing audio status are shown in the upper-right corner of the screen.

Icon		Description
	Mute	Mute engaged
	Battery	Remaining battery life of a connected *Bluetooth®* Wireless Technology device
	Handsfree + Audio streaming connection	*Bluetooth®* Wireless Technology Handsfree call and audio streaming available
	Handsfree connection	*Bluetooth®* Wireless Technology Handsfree call available
	Bluetooth® Wireless Technology audio streaming	*Bluetooth®* Wireless Technology audio streaming available
	Downloading contacts	Downloading contacts through *Bluetooth®* Wireless Technology wireless communications
	Downloading call history	Downloading call history through *Bluetooth®* Wireless Technology wireless communications
	Line busy	Phone call in progress
	Mute mic	Mic muted during a call (caller cannot hear your voice)
	Phone signal strength	Display the phone signal strength for a cell phone connected by *Bluetooth®* Wireless Technology

Radio

You can listen to FM, AM and SiriusXM radio.

(1) Band

Switch between FM, AM and SiriusXM.

(2) Presets

Change the preset number on the main screen.

(3) List

Display all available stations.

(4) Menu

Navigate to the menu screen.

(5) Presets 1~40

Save or listen to favorite stations.

Switching between FM, AM and SiriusXM

- Press the **[RADIO]** button on the audio system to switch between FM, AM and SiriusXM.
- Select [Band] on the screen to switch between FM, AM and SiriusXM.

Searching frequencies

Searching frequencies by pressing the **[SEEK/TRACK]** button on the product.

< Presets >

By selecting [< Presets >], the buttons for Presets 1~40 displayed on the screen can be changed.

Presets 1~40

Select the button to listen to a preset.

Press and hold the button number to save the current station. If the slot is empty, simply selecting saves the station to the slot.

List

A list of all available stations is displayed. Select the desired station.

Favorite stations can be saved to [Presets] by selecting [+].

Menu

Select [Menu], and select the desired function.

- Presets: Save up to 40 frequently used stations.

  To listen to a preset, select the desired station.

  Press and hold the desired slot from 1 through 40. This saves the current station in the selected slot.

  If the slot is empty, simply selecting saves the station to the slot.
- Scan: All stations available in the current location of the vehicle are played for five seconds each.
- Information: View detailed station information.
- Sound Settings: Audio sound settings can be changed.
- Station Info: Set whether to receive station information such as Station Name, Program Type or Information.

✻ NOTICE - SiriusXM® Satellite Radio information

- **Satellite Radio channels:**
  Enjoy SiriusXM Satellite Radio with a 3-month trial subscription to the Sirius Select package. You'll get over variable channels, including commercialfree music, plus all your favorite sports, exclusive talk, entertainment, and a selection of premium programming. For more information and a complete list of SiriusXM channels, visit siriusxm.com in the United States, siriusxm.ca in Canada, or call SiriusXM at 1-888-539-7474.
- **Satellite Radio reception factors:**
  To receive the satellite signal, your vehicle has been equipped with a satellite radio antenna located on the roof of your vehicle. The vehicle roof provides the best location for an unobstructed, open view of the sky, a requirement of a satellite radio system. Like AM/FM, there are several factors that can affect satellite radio reception performance:

(Continued)

(Continued)

  - **Antenna obstructions: For optimal reception performance, keep the antenna clear of snow and ice build-up and keep luggage and other material as far away from the antenna as possible.**
- **SiriusXM Satellite Radio service:**
  SiriusXM is a subscription-based satellite radio service that broadcasts music, sports, news and entertainment programming to radio receivers, which are available for installation in motor vehicles or factory installed, as well as for the home, portable and wireless devices, and through an Internet connection on a personal computer.
  Vehicles that are equipped with a factory installed SiriusXM Satellite Radio system include:
  - **Hardware and an introductory trial subscription term, which begins on the date of sale or lease of the vehicle.**
  - **For a small upgrade fee, access to SiriusXM music channels, and other select channels over the Internet using any computer connected to the Internet (U.S. customers only).**

(Continued)

(Continued)

- **SiriusXM services require a subscription sold separately, or as a package, by Sirius XM Radio Inc. If you decide to continue service after your trial, the subscription plan you choose will automatically renew thereafter and you will be charged according to your chosen payment method at then-current rates. Fees and taxes apply. To cancel you must call SiriusXM at 1-866-635-2349. See SiriusXM Customer Agreement for complete terms at www.siriusxm.com. SiriusXM U.S. satellite and data services are available only in the 48 contiguous states, DC and Puerto Rico (with coverage limitations). SiriusXM satellite service is also available in Canada; see www.siriusxm.ca. All fees and programming subject to change. Sirius, XM and all related marks and logos are trademarks of Sirius XM Radio Inc.**

SiriusXM

(1) Band

Switch between FM, AM and SiriusXM.

(2) Presets

Change the preset number on the main screen.

(3) List

Display all channels.

(4) Menu

Navigate to the menu screen.

(5) Presets 1~40

Save or listen to favorite channels.

(6) Play Live

Switches to the live broadcast mode.

(7) Skip Backward

Repeats the previously broadcasted program.

- Holding for less than 0.8 seconds: Moves to the previous segment.
- Holding for over 1.0 seconds: Moves to the previous 5 seconds.

(8) Play/Pause

Pauses/plays the current broadcasting program.

(9) Skip Forward

Moves to the next segment.

Switching between FM, AM and SiriusXM

- Press the **[RADIO]** button on the audio system to switch between FM, AM and SiriusXM.
- Select [Band] on the screen to switch between FM, AM and SiriusXM.

Searching channels

Press the **[SEEK/TRACK]** button to search channels.

< Presets >

By selecting [< Presets >], the buttons for Presets 1~40 displayed on the screen can be changed.

Presets 1~40

Select the button to listen to a preset.

Press and hold the button number to save the current channel.

List

A list of all channels is displayed. Select the desired channel.

Favorite channels can be saved to [Presets] by selecting [+].

Menu

Select [Menu], and select the desired function.

- Presets: Save up to 40 frequently used channels.

  To listen to a preset, select the desired channel.

  Press and hold the desired slot from 1 through 40. This saves the current channel in the selected slot.

  If the slot is empty, simply selecting saves the channel to the slot.
- Categories: Channels can be searched by category.
- Direct Tune: The desired channel can be selected by entering numbers.
- Sound Settings: Audio sound settings can be changed.
- Tag Song: Tag the current song information.

  When an Apple device (iPhone®, iPod®) is connected, tagged song information is sent automatically to the connected device.

✻ NOTICE

Up to 50 songs can be tagged.

- Scan: All channels available in the vehicle's current location are played for ten seconds each.
- Program Schedule: View the program schedule.
- Featured Favorites: The Featured Favorites feature allows SiriusXM™ to broadcast additional presets.
  - Example 1: During holidays, "Holiday Music" might include all SiriusXM™ channels that are playing holiday music for easy access by users.

  Multiple sets of Featured Favorites data can be broadcast by SiriusXM™ and can change from time to time.
- Information: View detailed channel information.
- Category Lock: Search or scan channels in the current category only.

Media

MP3

Supported audio formats

Compressed audio formats	MPEG1 Audio Layer3
	MPEG2 Audio Layer3
	MPEG2.5 Audio Layer3
	Windows Media Audio Ver 7.X & 8.X

✻ NOTICE

File formats other than the formats above may not be recognized or playable. Information such as filename may not be displayed.

Range of supported compressed file types

1. Bitrate range (Kbps)

BIT RATE(kbps)	MPEG1	MPEG2	MPEG2.5	WMA
	Layer3			High Range
	32	8	8	48
	40	16	16	64
	48	24	24	80
	56	32	32	96
	64	40	40	128
	80	48	48	160
	96	56	56	192
	112	64	64	
	128	80	80	
	160	96	96	
	192	112	112	
	224	128	128	
	256	144	144	
	320	160	160	

2. Sampling frequency (Hz)

MPEG1	MPEG2	MPEG2.5	WMA
44100	22050	11025	32000
48000	24000	12000	44100
32000	16000	8000	48000

- The sound quality of MP3/WMA compressed files may vary depending on the bitrate. (A higher bitrate can have better sound quality.)
- The product only recognizes files with the MP3 or WMA extension. Files without one of these extensions are not recognized.

3. Number of recognizable folders and files
- Folders: 2,000 for USB
- Files: 6,000 for USB
- No recognition limit for folder hierarchies

4. Character display range (Unicode)
- Filenames: Up to 64 English characters (64 Korean characters)
- Foldernames: Up to 32 English characters (32 Korean characters)

Languages supported (Unicode support)

- Korean: 2,604 characters
- English: 94 characters
- Common Chinese characters: 4,888 characters
- Special symbols: 986 characters

✻ NOTICE

Japanese/Simplified Chinese characters are not supported.

✻ NOTICE - Using the USB Devices

- **Starting the vehicle while a USB device is connected can damage the device. Please disconnect USB devices before starting the vehicle.**
- **Starting the vehicle or stopping the engine while an external USB device is connected can result in failure of the external USB device to operate.**
- **Be cautious of static electricity when connecting/disconnecting external USB devices.**
- **An encrypted MP3 player is not recognized when connected as an external device.**
- **External USB devices may not be recognized, depending on the state of the external USB device.**
- **Only products with byte/sectors formatted at 4 KB or lower are recognized.**
- **Only USB devices in FAT12/16/32 format are recognized; NTFS and ExFAT file systems are not recognized.**
- **Some USB devices are not recognized due to compatibility issues.**

(Continued)

(Continued)

- **Do not touch the USB connections.**
- **Connecting and disconnecting USB devices rapidly over a short period of time can cause equipment failure.**
- **Abnormal sounds may be audible when the USB device is disconnected.**
- **Turn the audio off before connecting or disconnecting external USB devices.**
- **Recognition may take longer depending on the type, capacity or file format of the external USB device.**
- **Image display and video playback are not supported.**
- **Use of USB accessories, including charge and heat though the USB I/F, can lead to reduced product performance or malfunctions. Do not use USB devices or accessories for these purposes.**

(Continued)

(Continued)

- **Use of aftermarket USB hubs and extension cables can result in the vehicle's audio system failing to recognize your USB device. Connect the USB device directly to the multimedia port of your vehicle.**
- **When using high-capacity USB devices with logical drive divisions, only files saved on the highest level logical drive can be played.**
  If applications are loaded on a USB drive, file playback may fail.
- **Some MP3 players, cell phones, digital cameras, etc. (USB devices that are not recognized as mobile storage) may not operate normally when connected.**
- **USB charging may not be supported by some mobile devices.**
- **Operation is guaranteed only for standard (Metal Cover Type) USB Memory drives.**
- **Operation of HDD, CF, SD and memory stick devices is not guaranteed.**

(Continued)

(Continued)

- **DRM (Digital Rights Management) files cannot be played.**
- **SD-type USB memory, CF-type USB memory, and other USB memory devices that require adapters for connection are not supported.**
- **Proper operation of USB HDDs or USB drives with connectors that loosen due to vehicle vibrations is not guaranteed. (iStick, etc.)**
- **USB products that are used as key chains or cell phone accessories may damage the USB jack and affect proper file playback. Please refrain from use. Use only products with plug connectors, as shown in the following illustration.**

- **When MP3 devices or cell phones are connected simultaneously through AUX, BT Audio and USB modes, a popping noise or malfunction may occur.**

USB

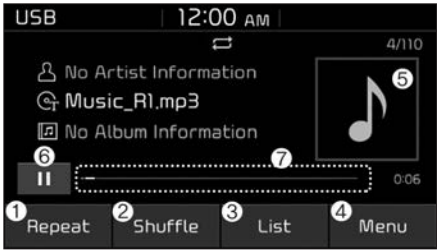

(1) Repeat

Enable/disable repeat.

(2) Shuffle

Enable/disable shuffle play.

(3) List

View a list of all songs.

(4) Menu

Navigate to the menu screen.

(5) Album Image

View song info.

(6) Pause

Pause or play music.

(7) Playback progress

Select to skip to the desired location.

Playback

- Press the **[MEDIA]** button, and select [USB].
- Connect a USB drive to the USB port to automatically play files on the USB drive.

Changing songs

- Press the **[SEEK/TRACK]** button to play the previous or next song.
- Press and hold the **[SEEK/TRACK]** button to rewind or fast forward the currently playing song.
- Search songs by turning **TUNE** knob, and press the knob to play.

Selecting songs from a list

Select [List] to see a list of songs available for play.

Select and play the desired song.

Repeat play

Select [Repeat] to enable or disable ‘Repeat all’, ‘Repeat current song’, ‘Repeat folder’ or ‘Repeat category’.

- Repeat all: All songs in the playlist are repeated.
- Repeat current song: The currently playing song is repeated.
- Repeat folder: All songs in the current folder are repeated.
- Repeat category: Repeat all songs in the current category.

✻ NOTICE

The repeat folder function is available only when songs are playing from the [File] category under [List].

Shuffle play

Select [Shuffle] to enable/disable 'Shuffle', 'Shuffle folder' or 'Shuffle category' play.

- Shuffle: Songs are played in random order.
- Shuffle folder: Songs within the current folder are played in random order.
- Shuffle category: Songs within the current category are played in random order.

Menu

Select [Menu], and select the desired function.

- Information: Detailed information on the currently playing song is displayed.
- Sound Settings: Audio sound settings can be changed.

✻ NOTICE - Using the iPod® Devices

- **To use the audio system's iPod® control function, use the dedicated cable provided with your iPod®.**
- **Connecting the iPod® to the vehicle during play may result in a loud noise that lasts about one to two seconds. Connect the iPod® to the vehicle after stopping or pausing play.**
- **Connect the iPod® with the vehicle in the ACC ON state to begin charging.**
- **When connecting the iPod® cable, be sure to fully push the cable into the port.**
- **When EQ effects are enabled simultaneously on external devices, such as iPod®s and the audio system, the EQ effects may overlap, causing sound quality deterioration or distortion. Deactivate the EQ function for all external devices, if possible.**
- **Noise may occur when your iPod® or the AUX port is connected. Disconnect and store separately when not in use.**

(Continued)

(Continued)

- **There may be noise if the audio system is used with an iPod® or AUX external device connected to the power jack. In these cases, disconnect the iPod® or external device from the power jack.**
- **Play may be interrupted, or device malfunctions may occur depending on the characteristics of your iPod®/iPhone®.**
- **Play may fail if your iPhone® is connected through both *Bluetooth*® Wireless Technology and USB. In this case, select Dock connector or *Bluetooth*® Wireless Technology on your iPhone® to change the sound output settings.**
- **If your software version does not support the communication protocol or your iPod® is not recognized due to device failure, anomalies or defects, iPod® mode cannot be used.**

(Continued)

(Continued)

- **The search and song play order in the iPod® device may be different from the search order in the audio system.**
- **If the iPod® has failed due to an internal defect, please reset the iPod® (consult your iPod® manual).**
- **Depending on the software version, the iPod® may fail to sync with the system. If the media is removed or disconnected before recognition, the previous mode may not be restored (iPad® cannot be charged).**
- **Cables other than the 1-meter cable provided with iPod®/iPhone® products may not be recognized.**
- **When other music apps are used on your iPod®, the system sync function may fail due to malfunction of the iPod® application.**

iPod®

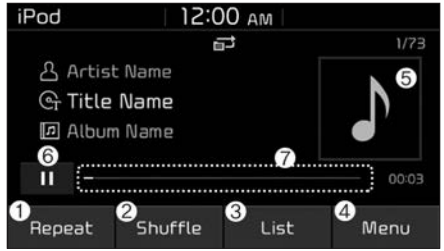

(1) Repeat

Enable/disable repeat.

(2) Shuffle

Enable/disable shuffle play.

(3) List

View a list of all songs.

(4) Menu

Navigate to the menu screen.

(5) Album Image

View song info.

(6) Pause

Pause or play music.

(7) Playback progress

Select to skip to the desired location.

Playback

- Connect your iPod® to the audio USB port, press the **[MEDIA]** button, and select [iPod].

Changing songs

- Press the **[SEEK/TRACK]** button to play the previous or next song.
- Press and hold the **[SEEK/TRACK]** button to rewind or fast forward the currently playing song.
- Search songs by turning the **TUNE** knob, and press the knob to play.

Selecting songs from a list

Select [List] to see a list of songs available for play.

Select and play the desired song.

Repeat play

Select [Repeat] to enable or disable 'Repeat category', 'Repeat current song'.

- Repeat category: Repeat all songs in the current category.
- Repeat current song: The currently playing song is repeated.

Shuffle play

Select [Shuffle] to enable/disable 'Shuffle category' play.

- Shuffle category: Songs within the current category are played in random order.

Menu

Select [Menu], and select the desired function.

- Information: Detailed info on the currently playing song is displayed.
- Sound Settings: Audio sound settings can be changed.

When other music programs are running

When songs saved on your iPod® are playing through a separate music app, the following screen is displayed.

(1) Play/Pause: Pause or play music.

(2) Play iPod Files: Play music saved on your iPod®.

(3) Album Image: View playback info.

✻ NOTICE

Operation cannot be carried out correctly due to iPod® application malfunction.

Playing iPod files

- Select [Play iPod Files] to play songs saved on your iPod®.

  If there are no songs saved on your iPod®, the [Play iPod Files] is disabled.

⚠ WARNING - Distracted driving

Driving while distracted can result in a loss of vehicle control that may lead to an accident, severe personal injury, and death. The driver's primary responsibility is in the safe and legal operation of a vehicle, and use of any handheld devices, other equipment, or vehicle systems which take the driver's eyes, attention and focus away from the safe operation of a vehicle or which are not permissible by law should never be used during operation of the vehicle.

✻ NOTICE

- Using *Bluetooth®* Wireless Technology Audio

- ***Bluetooth®*** **Wireless Technology Audio mode can only be used if a *Bluetooth®* Wireless Technology-enabled phone is connected. Only devices that support *Bluetooth®* Wireless Technology audio can be used.**
- **If the *Bluetooth®* Wireless Technology-enabled phone is disconnected during play, the music stops.**
- **When the TRACK UP/DOWN buttons are used during *Bluetooth®* Wireless Technology audio streaming, a popping noise or sound interruptions may occur, depending on the cell phone device.**
- **Depending on the cell phone model, the audio streaming function may not be supported.**
- **If a phone call is made or received when music is playing in *Bluetooth®* Wireless Technology Audio mode, the call may mix with the music.**

(Continued)

(Continued)

- **When returning to *Bluetooth®* Wireless Technology Audio mode after ending a call, play might not resume automatically for some cell phone models.**

Precautions for Safe Driving

Bluetooth® Wireless Technology Handsfree is a feature that enables drivers to practice safe driving. Connecting the car audio system with a *Bluetooth®* Wireless Technology phone allows the user to conveniently make calls, receive calls, and manage the phone book. Before using the *Bluetooth®* Wireless Technology, carefully read the contents of this user's manual.

⚠ WARNING - Distracted driving

Driving while distracted can result in a loss of vehicle control that may lead to an accident, severe personal injury, and death. The driver's primary responsibility is in the safe and legal operation of a vehicle, and use of any handheld devices, other equipment, or vehicle systems which take the driver's eyes, attention and focus away from the safe operation of a vehicle or which are not permissible by law should never be used during operation of the vehicle.

Bluetooth® Wireless Technology (BT) Audio

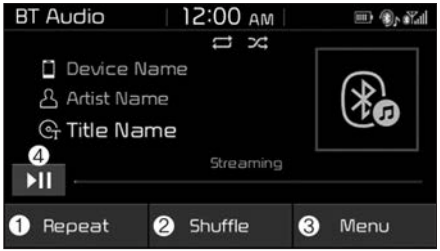

(1) Repeat

Enable/disable repeat.

(2) Shuffle

Enable/disable shuffle play.

(3) Menu

Navigate to the menu screen.

(4) Play/Pause

Pause or play music.

✻ NOTICE

- **Some cell phone models may not support particular functions.**
- ***Bluetooth®* Wireless Technology audio volume is synced with cell phone media volume.**

Playback

- Press the **[MEDIA]** button, and select [BT Audio].

Changing songs

- Press the **[SEEK/TRACK]** button to play the previous or next song.

✻ NOTICE

Some cell phones may not support this function.

Repeat play

Select [Repeat] to enable or disable 'Repeat all', 'Repeat current song' or 'Repeat category'.

- Repeat all: All songs in the playlist are repeated.
- Repeat current song: The currently playing song is repeated.
- Repeat category: Repeat all songs in the current category.

✻ NOTICE

The repeat play function is engaged depending on the operation of the connected *Bluetooth®* Wireless Technology device.

Shuffle play

Select [Shuffle] to enable/disable 'Shuffle', 'Shuffle category' play.

- Shuffle: Songs are played in random order.
- Shuffle category: Songs within the current category are played in random order.

✻ NOTICE

The shuffle function is engaged depending on the operation of the connected *Bluetooth®* Wireless Technology device.

Menu

Select [Menu], and select the desired function.

- Connections: The currently connected *Bluetooth®* Wireless Technology device can be changed.
- Information: Detailed information on the currently playing song is displayed.
- Sound Settings: Audio sound settings can be changed.

AUX

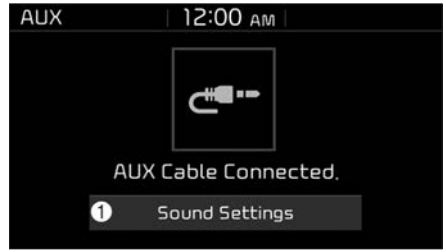

Running AUX

- Press the **[MEDIA]** button, and select [AUX].
- Connect the external device connection jack to the AUX terminal to run AUX.

(1) Sound Settings: Audio sound settings can be changed.

Phone

✻ NOTICE
- Using *Bluetooth®* Wireless Technology Phone

- *Bluetooth®* Wireless Technology is a near-field wireless networking technology that uses the 2.4 GHz frequency to connect various devices within a certain distance wirelessly.
- The technology is used in PCs, peripherals, *Bluetooth®* Wireless Technology phones, tablet PCs, household appliances and automobiles. Devices supporting *Bluetooth®* Wireless Technology can exchange data at high speeds without physical cable connections.
- *Bluetooth®* Wireless Technology Handsfree devices enable convenient access to phone functions through cell phones equipped with *Bluetooth®* Wireless Technology.
- Some *Bluetooth®* Wireless Technology devices may not be supported by the *Bluetooth®* Wireless Technology Handsfree function.

(Continued)

(Continued)

- When *Bluetooth®* Wireless Technology is connected and calls are attempted through a connected cell phone from outside the vehicle, the call is connected through the *Bluetooth®* Wireless Technology Handsfree function of the vehicle.
- Please be sure to disconnect the *Bluetooth®* Wireless Technology Handsfree function through your *Bluetooth®* Wireless Technology device or the audio screen.
- The *Bluetooth®* Wireless Technology Handsfree function helps drivers to drive safely. By connecting a *Bluetooth®* Wireless Technology-enabled phone to the vehicle's audio system, phone calls can be made and received through the audio system and contacts can be managed. Consult the user manual before use.

⚠ WARNING - Distracted driving

Driving while distracted can result in a loss of vehicle control that may lead to an accident, severe personal injury, and death. The driver's primary responsibility is in the safe and legal operation of a vehicle, and use of any handheld devices, other equipment, or vehicle systems which take the driver's eyes, attention and focus away from the safe operation of a vehicle or which are not permissible by law should never be used during operation of the vehicle.

Precautions when connecting *Bluetooth®* Wireless Technology devices

- The vehicle supports the following *Bluetooth®* Wireless Technology functions. Some *Bluetooth®* Wireless Technology devices may not support some functions.
  1) *Bluetooth®* Wireless Technology Handsfree phone calls
  2) Operations during a call (Private, Switch, Out Vol. controls)
  3) Download call history saved to the *Bluetooth®* Wireless Technology device
  4) Download contacts saved to the *Bluetooth®* Wireless Technology device
  5) Automatic contacts/call history download when *Bluetooth®* Wireless Technology is connected
  6) Automatic *Bluetooth®* Wireless Technology device connection when the vehicle is started
  7) *Bluetooth®* Wireless Technology audio streaming playback
- Before connecting the audio system to your device, make sure your device supports *Bluetooth®* Wireless Technology.
- Even if your device supports *Bluetooth®* Wireless Technology, a *Bluetooth®* Wireless Technology connection cannot be established if the device's *Bluetooth®* Wireless Technology function is switched off. Search and connect with the *Bluetooth®* Wireless Technology function enabled.
- Pair or connect *Bluetooth®* Wireless Technology devices to the audio system with the vehicle at a standstill.
- If a *Bluetooth®* Wireless Technology connection is lost due to abnormal conditions while a *Bluetooth®* Wireless Technology device is connected (communication range exceeded, device power OFF, communication errors, etc.), the disconnected *Bluetooth®* Wireless Technology device is searched for and automatically reconnected.
- If you want to disable the *Bluetooth®* Wireless Technology device auto connect function, turn the *Bluetooth®* Wireless Technology function OFF on your device when you are not driving or when the car is parked.

  Consult the user manuals for individual devices to see whether *Bluetooth®* Wireless Technology is supported.
- Handsfree call quality and volume may vary depending on the type of *Bluetooth®* Wireless Technology device.

- Some *Bluetooth®* Wireless Technology devices are subject to intermittent *Bluetooth®* Wireless Technology connection failures. In this case, use the following method.
  1) Turn the *Bluetooth®* Wireless Technology function off on your *Bluetooth®* Wireless Technology device ➟ Turn it on and try again.
  2) Delete the paired device from both the audio system and *Bluetooth®* Wireless Technology device, then pair again.
  3) Power down your *Bluetooth®* Wireless Technology device ➟ Turn it on and try again.
  4) Completely remove the battery from your *Bluetooth®* Wireless Technology device; reinsert it, reboot, and attempt connection.
  5) Restart the vehicle and reattempt connection.

Pairing a Bluetooth® Wireless Technology device

Information on pairing *Bluetooth®* Wireless Technology devices

- Pairing refers to the process of pairing *Bluetooth®* Wireless Technology cell phones or devices with the system prior to connection. This is a necessary procedure for *Bluetooth®* Wireless Technology connection and usage.
- Up to five devices can be paired.

Pairing the first *Bluetooth®* Wireless Technology device

Press the **[PHONE]** button on the audio system or the **[CALL]** button on the steering wheel remote control ➟ Search for the vehicle from the *Bluetooth®* Wireless Technology device, and pair ➟ Enter the passkey on the *Bluetooth®* Wireless Technology device or approve passkey ➟ *Bluetooth®* Wireless Technology pairing completed.

1. When the **[PHONE]** button on the audio or the **[CALL]** button on the steering wheel remote control is pressed, the following screen is displayed. Devices can now be paired.

(1) Vehicle Name: Searched name in *Bluetooth®* Wireless Technology device.

✻ NOTICE

The vehicle name in the image above is an example. Refer to your device for the actual name of your device.

2. Search for available *Bluetooth®* Wireless Technology devices in the *Bluetooth®* Wireless Technology menu of your *Bluetooth®* Wireless Technology device (cell phone, etc.).
3. Confirm that the vehicle name in your *Bluetooth®* Wireless Technology device matches the vehicle name shown on the audio screen, then select it.

4-1. For devices that require passkey entry, a passkey entry screen is shown on your *Bluetooth®* Wireless Technology device.
- Enter the passkey '0000', in your *Bluetooth®* Wireless Technology device.

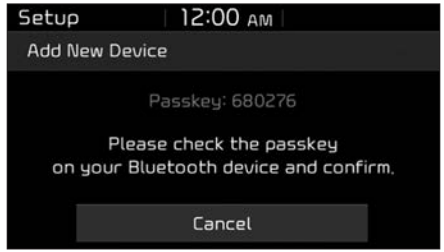

4-2. For devices that require passkey confirmation, the following screen is shown on the audio system. A 6-digit passkey input screen is shown in the *Bluetooth®* Wireless Technology device.
- After confirming that the 6-digit passkey on the audio screen and the *Bluetooth®* Wireless Technology device are identical, select [OK] in your *Bluetooth®* Wireless Technology device.

✻ NOTICE

The 6-digit passkey in the image above is an example. Refer to your vehicle for the actual passkey.

Pairing a second *Bluetooth®* Wireless Technology device

Press the **[SETUP]** button on the audio system ➟ Select [Bluetooth] ➟ Select [Connections] ➟ Select [Add New].

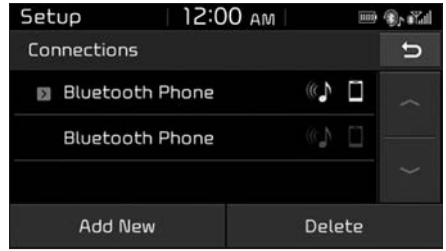

- The pairing procedure from this point is identical to [Pairing the first Bluetooth device].

✻ NOTICE

- ***Bluetooth®* Wireless Technology standby mode lasts for three minutes. If a device is not paired within three minutes, pairing is canceled. Start over from the beginning.**
- **For most *Bluetooth®* Wireless Technology devices, a connection is established automatically after pairing. Some devices, however, require separate confirmation when connecting after pairing. Be sure to check your *Bluetooth®* Wireless Technology device after pairing to confirm that it has connected.**

Connecting Bluetooth® Wireless Technology devices

If there are no connected devices

Press the **[PHONE]** button on the audio system or the **[CALL]** button in the steering wheel remote control ➟ List of paired *Bluetooth®* Wireless Technology devices ➟ Select the desired *Bluetooth®* Wireless Technology device from the list ➟ Connect *Bluetooth®* Wireless Technology.

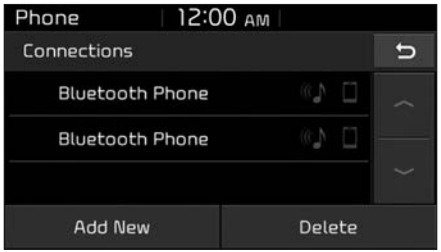

If there are connected devices

Press the **[PHONE]** button on the audio system ➟ Select [Settings] ➟ Select [Connections] ➟ Select *Bluetooth®* Wireless Technology device to connect ➟ Select [Connect] ➟ Connect *Bluetooth®* Wireless Technology.

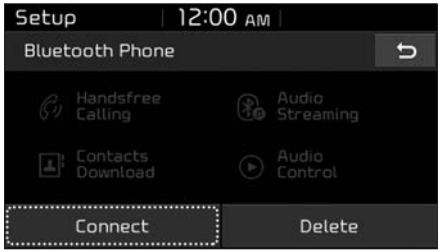

✻ NOTICE

- **Only one *Bluetooth®* Wireless Technology device can be connected at a time.**
- **When a *Bluetooth®* Wireless Technology device is connected, other devices cannot be paired.**

Accepting/rejecting phone calls

Receiving phone calls with *Bluetooth®* Wireless Technology connected.

(1) Caller name: If the caller number is in your contacts, the corresponding name is displayed.

(2) Incoming phone number: Incoming phone number is displayed.

(3) Accept: Accept call.

(4) Reject: Reject call.

✻ NOTICE

- **When the incoming call screen is displayed, audio mode and the settings screen cannot be shown. Only call volume control is supported.**
- **Some *Bluetooth®* Wireless Technology devices may not support the call reject function.**
- **Some *Bluetooth®* Wireless Technology devices may not support the phone number display function.**

Operation during calls

Incoming call with *Bluetooth®* Wireless Technology connected ➟ Select [Accept].

(1) Call duration: Call duration display.

(2) Caller name: If the caller number is in your contacts, the corresponding name is displayed.

(3) Incoming phone number: Incoming phone number is displayed.

(4) Keypad: Number keypad for Automatic Response Service input is displayed.

(5) Private: Call is transferred to a cell phone.

(6) Outgoing Volume: Adjust outgoing voice volume.

(7) End: End call.

✻ NOTICE

- **Some *Bluetooth*® Wireless Technology devices may not support the Private function.**
- **The outgoing voice volume may vary depending on the type of *Bluetooth*® Wireless Technology device. If the outgoing voice volume is too high or low, adjust the Out Vol.**

Favorites

Press the **[PHONE]** button on the audio system ➟ Select [Favorites] ➟ Favorites list displayed.

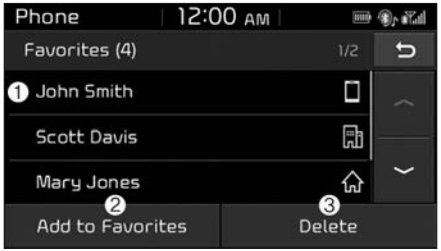

(1) Favorites list: A list of paired favorites is displayed.
Connect a call when selected.

(2) Add to Favorites: Add a downloaded phone number to favorites.

(3) Delete: Delete a saved favorites.

✻ NOTICE

- **Up to 20 favorites can be paired for each paired *Bluetooth*® Wireless Technology device.**
- **Favorites can be accessed when the *Bluetooth*® Wireless Technology device they were paired from is connected.**
- **The audio system does not download favorites from *Bluetooth*® Wireless Technology devices. Favorites must be newly saved before use.**
- **To add to favorites, contacts must be downloaded first.**
- **Saved favorites are not updated even if the contacts of the connected *Bluetooth*® Wireless Technology device are changed. In this case, favorites need to be deleted and added again.**

Call history

Press the **[PHONE]** button on the audio system ➞ Select [Call history] ➞ Call history is displayed.

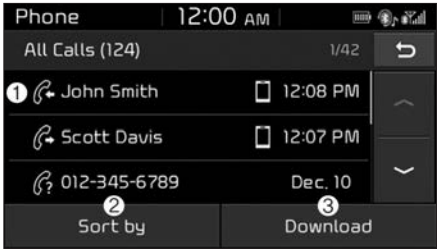

(1) Call history: Display the downloaded call history list.

Connect a call when selected.

(2) Sort by: Sort by all calls, dialed calls, received calls or missed calls.

(3) Download: Download call history from connected *Bluetooth®* Wireless Technology devices.

✻ NOTICE

- **Up to 50 dialed, received and missed calls are saved.**
- **When the latest call history is received, the existing call history is deleted.**

Contacts

Press the **[PHONE]** button on the audio system ➞ Select [Contacts] ➞ Select letter (ABC) ➞ Contacts displayed.

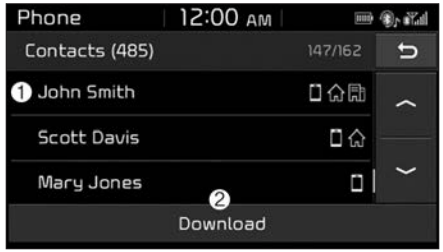

(1) Contacts: Display downloaded contacts.

Connect a call when selected.

(2) Download: Download contacts from connected *Bluetooth®* Wireless Technology devices.

✻ NOTICE

- **Only supported contacts format can be downloaded and displayed from the *Bluetooth®* Wireless Technology device, contacts from some applications will not be included.**
- **Up to 2,000 contacts can be saved.**
- **In some cases, additional confirmation from your *Bluetooth®* Wireless Technology device is necessary when downloading contacts. If downloading of contacts unsuccessful, consult your *Bluetooth®* Wireless Technology device's settings or the audio screen to approve the download.**
- **Contacts without phone numbers are not displayed.**

Dial

Press the **[PHONE]** button on the audio ➟ Select [Dial].

(1) Phone number entry window: The phone number entered using the keypad is displayed.

(2) Clear

- Select to delete individual digits.
- Press and hold to delete the entire phone number.

(3) Keypad: Enter phone number.

(4) *Bluetooth®* Wireless Technology phone name

- The name of the connected *Bluetooth®* Wireless Technology device is displayed.
- Contacts matching the keypad number/letter input are displayed.

(5) Call

- Enter and select a phone number to call.
- Select without entering a phone number to see the most recent dialed call.

Connections (if equipped)

Press the **[PHONE]** button on the audio ➟ Select [Connections].

- For connections setting, refer to Setup ➟ Select [Bluetooth] ➟ Select [Connections] page.

Setup

Press the **[PHONE]** button on the audio ➟ Select [Settings].

- For phone Setup, refer to Setup page ➟ Select [Bluetooth].

⚠ WARNING - Distracted driving

Driving while distracted can result in a loss of vehicle control that may lead to an accident, severe personal injury, and death. The driver's primary responsibility is in the safe and legal operation of a vehicle, and use of any handheld devices, other equipment, or vehicle systems which take the driver's eyes, attention and focus away from the safe operation of a vehicle or which are not permissible by law should never be used during operation of the vehicle.

Setup

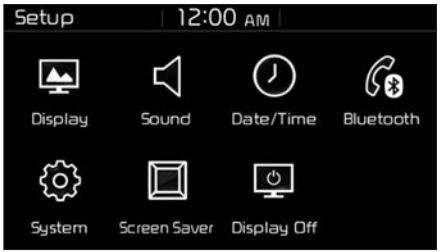

Access Display, Sound, Date/Time, Bluetooth, System, Screen Saver and Display Off settings.

Press the **[SETUP]** button on the audio system.

Display

Press the **[SETUP]** button on the audio system ➟ Select [Display].

- Mode: Audio screen brightness can be adjusted to the time of day.
- Illumination: The brightness of the audio screen can be changed.

Sound

Press the **[SETUP]** button on the audio system ➟ Select [Sound].

- Position: Sound balance and panning can be adjusted.
- Tone: Sound tone color can be adjusted.
- Back-up Warning Priority: Automatically lower audio volume while reversing.
- Speed Dependent Volume: Automatically adjust volume based on vehicle speed.
- Beep: Select whether to play a sound when the screen is touched.

Date/Time

Press the **[SETUP]** button on the audio system ➟ Select [Date/Time].

- Set Time: Set the time displayed on the audio screen.
- Time Format: Choose between 12-hour and 24-hour time formats.
- Set Date: Set the date displayed on the audio screen.

Bluetooth

Press the **[SETUP]** button on the audio system ➞ Select [Bluetooth].

- Connections: Control pairing, deletion, connection and disconnection of *Bluetooth®* Wireless Technology devices.
- Auto Connection Priority: Set the connection priority of *Bluetooth®* Wireless Technology devices when the vehicle is started.
- Download Contacts: Contacts can be downloaded from connected *Bluetooth®* Wireless Technology devices.
- Bluetooth Voice Prompts: Play or mute voice prompts for *Bluetooth®* Wireless Technology device pairing, connection and errors.

✻ NOTICE

- **When paired devices are deleted, the call history and contacts of the device saved to the audio system are deleted.**
- **For *Bluetooth®* Wireless Technology connections with low connection priority, some time may be required for the connection to be established.**
- **Contacts can be downloaded only from the currently connected *Bluetooth®* Wireless Technology device.**
  If no *Bluetooth®* Wireless Technology device is connected, the download contacts button is disabled.

System

Press the **[SETUP]** button on the audio system ➞ Select [System].

- Language: Change the user language.

Screen Saver

Set the information displayed when the audio system is switched off or the screen is turned off.

Press the **[SETUP]** button on the audio system ➟ Select [Screen Saver].

- Analog: An analog clock is displayed.
- Digital: A digital clock is displayed.
- None: No information is displayed.

Display Off

To prevent glare, the screen can be turned off with the audio system in operation.

Press the **[SETUP]** button on the audio system ➟ Select [Display Off].

Declaration of Conformity

IC

This device complies with Industry Canada license-exempt RSS standard(s). Operation is subject to the following two conditions: (1) This device may not cause interference; and (2) This device must accept any interference, including interference that may cause undesired operation of the device.

Le présent appareil est conforme aux CNR d'Industrie Canada applicables aux appareils radio exempts de licence.

L'exploitation est autorisée aux deux conditions suivantes: (1) l'appareil ne doit pas produire de brouillage, et (2) l'utilisateur de l'appareil doit accepter tout brouillage radioélectrique subi, même si le brouillage est susceptible d'en compromettre le fonctionnement.

RF Exposure

The antenna (or antennas) must be installed so as to maintain at all times a distance minimum of at least 20 cm between the radiation source (antenna) and any individual. This device may not be installed or used in conjunction with any other antenna or transmitter.

l'exposition aux RF

L’antenne (ou les antennes) doit tre install e de fa on maintenir tout instant une distance minimum de au moins 20 cm entre la source de radiation (l’antenne) et toute personne physique.

Driving your vehicle

Before driving 6-4
- Before entering vehicle 6-4
- Necessary inspections 6-4
- Before starting 6-4

Key positions 6-6
- Ignition switch position 6-6

Engine start/stop button 6-8
- Illuminated engine start/stop button 6-8
- Engine start/stop button position 6-8

Starting the engine 6-12
- Starting the engine with an ignition key 6-12
- Starting the engine with a smart key 6-13

Manual transmission 6-15
- Manual transmission operation 6-15
- Good driving practices 6-17

Automatic transmission 6-18
- Automatic transmission operation 6-18
- Good driving practices 6-23

Brake system 6-24
- Power brakes 6-24
- Parking brake 6-26
- Anti-lock Brake System (ABS) 6-29
- Electronic Stability Control (ESC) 6-30
- Hill-start assist control (HAC) 6-34
- Vehicle Stability Management (VSM) 6-35
- Good braking practices 6-37

Forward Collision-avoidance Assist (FCA) system (Radar type) 6-39
- FCA warning message and system control 6-41
- Brake operation 6-42
- Sensor to detect the distance from the vehicle in front (front radar) 6-43
- System malfunction 6-44
- Limitation of the system 6-45

Cruise Control System 6-50
- Cruise Control Switch 6-50
- To set cruise control speed 6-51
- To increase cruise control set speed 6-52
- To decrease the cruising speed 6-52
- To temporarily accelerate with the cruise control on . 6-52
- To cancel cruise control 6-53
- To resume cruising speed at more than approximately 30 km/h (20 mph) 6-53
- To turn cruise control off 6-54

Sport mode integrated control system 6-55
- Sport mode 6-55

Economical operation 6-56

Special driving conditions 6-58
• Hazardous driving conditions 6-58
• Rocking the vehicle 6-58
• Smooth cornering 6-59
• Driving at night 6-59
• Driving in the rain. 6-60
• Driving in flooded areas 6-61
• Driving off-road. 6-61
• Highway driving 6-61
Winter driving 6-63
• Snowy or icy conditions 6-63
• Use high quality ethylene glycol coolant. 6-64
• Check battery and cables 6-64
• Change to "winter weight" oil if necessary 6-64
• Check spark plugs and ignition system. 6-64
• To keep locks from freezing 6-64
• Use approved window washer anti-freeze in system . 6-64
• Don't let your parking brake freeze 6-65
• Don't let ice and snow accumulate underneath 6-65
• Carry emergency equipment 6-65
Vehicle load limit 6-66
• Tire and loading information label 6-66
• Certification label 6-69
Vehicle weight 6-71
• Base curb weight 6-71
• Vehicle curb weight 6-71
• Cargo weight 6-71
• GAW (Gross Axle Weight) 6-71
• GAWR (Gross Axle Weight Rating) 6-71
• GVW (Gross Vehicle Weight). 6-71
• GVWR (Gross Vehicle Weight Rating) 6-71

Be sure the exhaust system does not leak.

The exhaust system should be checked whenever the vehicle is raised to change the oil or for any other purpose. If you

hear a change in the sound of the exhaust or if you drive over something that strikes the underneath side of the vehicle, have the exhaust system checked as soon as possible by an authorized Kia dealer.

⚠ WARNING - Engine exhaust

Do not inhale exhaust fumes or leave your engine running in an enclosed area for a prolonged time.

Exhaust fumes contain carbon monoxide, a colorless, odorless gas that can cause unconsciousness and death by asphyxiation.

⚠ WARNING - Open trunk/tailgate

Do not drive with the trunk/tailgate open.

Poisonous exhaust gases can enter the passenger compartment. If you must drive with the trunk/tailgate open proceed as follows:

1.Close all windows.

2.Open side vents.

3.Set the air intake control at "Fresh", the air flow control at "Floor" or "Face" and the fan at the highest speed.

BEFORE DRIVING

Before entering vehicle

- Be sure that all windows, outside mirror(s), and outside lights are clean.
- Check the condition of the tires.
- Check under the vehicle for any sign of leaks.
- Be sure there are no obstacles behind you if you intend to back up.

Necessary inspections

Fluid levels, such as engine oil, engine coolant, brake fluid, and washer fluid should be checked on a regular basis, with the exact interval depending on the fluid. Further details are provided in Chapter 8, “Maintenance”.

⚠ WARNING - Distracted driving

Focus on the road while driving.

The driver's primary responsibility is in the safe and legal operation of the vehicle. Use of any hand held devices, other equipment or vehicle systems that distract the driver should not be used during vehicle operation.

Before starting

- Close and lock all doors.
- Position the seat so that all controls are easily reached.
- Buckle your seat belt.
- Adjust the inside and outside rearview mirrors.
- Be sure that all lights work.
- Check all gauges.
- Check the operation of warning lights when the ignition switch is turned to the ON position.
- Release the parking brake and make sure the brake warning light goes off.

For safe operation, be sure you are familiar with your vehicle and its equipment.

⚠ WARNING - Fire risk

When you intend to park or stop the vehicle with the engine on, be careful not to depress the accelerator pedal for a long period of time. It may overheat the engine or exhaust system and cause fire.

⚠ WARNING - Check surroundings

Always check the surrounding areas near your vehicle for people, especially children, before putting a vehicle into D (Drive) or R (Reverse).

⚠ WARNING - Loose objects

Securely store items in your vehicle. When you make a sudden stop or turn the steering wheel rapidly, loose objects may drop on the floor and it could interfere with the operation of the foot pedals, possibly causing an accident.

⚠ WARNING - Proper footwear

Always wear appropriate shoes when operating your vehicle.

Unsuitable shoes (high heels, ski boots, sandals, etc.) may interfere with your ability to use the brake and accelerator pedals.

⚠ WARNING - Driving while intoxicated

Do not drive while intoxicated. Drinking and driving is dangerous. Even a small amount of alcohol will affect your reflexes, perceptions and judgment.

Driving while under the influence of drugs is as dangerous as or more dangerous than driving drunk.

KEY POSITIONS

Ignition switch position

LOCK

OSC057001N

The steering wheel locks to protect against theft.

The ignition key can be removed only in the LOCK position. When turning the ignition switch to the LOCK position, push the key inward at the ACC position and turn the key toward the LOCK position.

The anti-theft steering column lock is not a substitute for the parking brake.

Before leaving the driver's seat, always make sure the shift lever is engaged in 1st gear for the Manual Transmission or P (Park) for the Automatic Transmission, set the parking brake fully and shut the engine off.

ACC (Accessory)

The steering wheel is unlocked and electrical accessories are operative.

If difficulty is experienced turning the ignition switch to the ACC position, turn the key while turning the steering wheel right and left to release the tension.

ON

The warning lights can be checked before the engine is started. This is the normal running position after the engine is started.

Do not leave the ignition switch ON if the engine is not running to prevent battery discharge.

START

Turn the ignition switch to the START position to start the engine. The engine will crank until you release the key; then it returns to the ON position. The brake warning light can be checked in this position.

✻ NOTICE

If you leave the ignition switch to the ACC or ON position for a long time, the battery may discharge.

⚠ WARNING - Ignition switch

Never turn the ignition switch to LOCK or ACC while the vehicle is moving. This would result in loss of directional control and braking function, which could cause an accident.

⚠ WARNING - Steering wheel

Never reach for any controls through the steering wheel while the vehicle is in motion. The presence of your hand or arm in this area could cause a loss of vehicle control.

⚠ WARNING - Key holder

Do not attach small purses, multiple keys, or any other heavy accessories to the driver's key chain used to start the vehicle. This may cause the driver to accidentally make the key inserted in the vehicle to change the ignition position to the ACC position while the vehicle is moving thereby increasing the risk of an accident and causing the deactivation of several safety features.

⚠ WARNING - Leaving the vehicle

To avoid unexpected or sudden vehicle movement, never leave your vehicle if the transmission is not locked in the P (Park) position and the parking brake is fully engaged. Before leaving the driver's seat, always make sure the shift lever is engaged in P (Park), set the parking brake fully and shut the engine off.

ENGINE START/STOP BUTTON (IF EQUIPPED)

Illuminated ENGINE START/STOP button

OYB056001

Whenever the front door is opened, the ENGINE START/STOP button will illuminate for your convenience. The light will go off after about 30 seconds when the door is closed. It will also go off immediately when the theft-alarm system is armed.

ENGINE START/STOP button position

OFF

Not illuminated

• With Manual Transmission

To turn off the engine (START/RUN position) or vehicle power (ON position), stop the vehicle then press the ENGINE START/STOP button.

• With Automatic Transmission

To turn off the engine (START/RUN position) or vehicle power (ON position), press the ENGINE START/STOP button with the shift lever in the P (Park) position. When you press the ENGINE START/STOP button without the shift lever in the P (Park) position, the ENGINE START/STOP button will not change to the OFF position but to the ACC position.

Also, the steering wheel locks when the ENGINE START/STOP button is in the OFF position to protect you against theft. It locks when the door is opened.

Vehicles equipped with anti-theft steering column lock

The steering wheel locks when the engine start/stop button is in the OFF position to protect you against theft. It locks when the door is opened.

If the steering wheel is not locked properly when you open the driver's door, the warning chime will sound. If the problem is not solved, we recommend that the system be checked by an authorized Kia dealer.

In addition, if the ENGINE START/STOP button is in the OFF position after the driver's door is opened, the steering wheel will not lock and the warning chime will sound. In such a situation, close the door. Then the steering wheel will lock and the warning chime will stop.

✻ NOTICE

If the steering wheel doesn't unlock properly, the ENGINE START/STOP button will not work. Press the ENGINE START/STOP button while turning the steering wheel right and left to release the tension.

- **If difficulty is experienced turning the engine start/stop button to the ACC position, turn the steering wheel right and left to release the tension while pressing the engine start/stop button.**
- **When you turn off the engine, the vehicle should be stopped.**

✻ NOTICE

You are able to turn off the engine (START/RUN) or vehicle power (ON), only when the vehicle is not in motion.

⚠ CAUTION

In an emergency situation while the vehicle is in motion, you are able to turn the engine off and to the ACC position by pressing the engine start/stop button for more than 2 seconds or 3 times successively within 3 seconds. If the vehicle is still moving, you can restart the engine without depressing the brake pedal by pressing the engine start/stop button with the shift lever in the N (Neutral) position.

ACC(Accessory)

Orange

• With Manual Transmission

Press the engine start/stop button when the button is in the OFF position without depressing the clutch pedal.

• With Automatic Transmission

Press the ENGINE START/STOP button while it is in the OFF position without depressing the brake pedal.

The steering wheel unlocks and electrical accessories are operational.

If the ENGINE START/STOP button is in the ACC position for more than 1 hour, the button is turned off automatically to prevent battery discharge.

ON

Red

• With Manual Transmission

Press the engine start/stop button when the button is in the ACC position without depressing the clutch pedal.

• With Automatic Transmission

Press the ENGINE START/STOP button while it is in the ACC position without depressing the brake pedal.

The warning lights can be checked before the engine is started. Do not leave the ENGINE START/STOP button in the ON position for a long time. The battery may discharge, because the engine is not running.

START/RUN

Not illuminated

• With Manual Transmission

To start the engine, depress the clutch pedal and brake pedal, then press the engine start/stop button with the shift lever in the N (Neutral) position.

• With Automatic Transmission

To start the engine, depress the brake pedal and press the engine start/stop button with the shift lever in the P (Park) or the N (Neutral) position. For your safety, start the engine with the shift lever in the P (Park) position.

If you leave the ENGINE START/STOP button in the ACC or ON position for a long time, the battery will discharge.

⚠ WARNING - Starting vehicle

Never press the ENGINE START/STOP button while the vehicle is in motion except in an emergency. This would result in loss of directional control and braking function, which could cause an accident.

STARTING THE ENGINE

⚠ WARNING - Proper footwear

Always wear appropriate shoes when operating your vehicle. Unsuitable shoes (high heels, ski boots, sandals, etc.) may interfere with your ability to use the brake and accelerator pedals.

Starting the engine with an ignition key (if equipped)

1. Make sure the parking brake is applied.
2. **Manual Transmission -** Depress the clutch pedal fully and shift the transmission into Neutral. Keep the clutch pedal and brake pedal depressed while turning the ignition switch to the start position.

   Automatic Transmission - Place the transmission shift lever in P (Park). Depress the brake pedal fully.

   You can also start the engine when the shift lever is in the N (Neutral) position.
3. Turn the ignition switch to START and hold it there until the engine starts (a maximum of 10 seconds), then release the key.

It should be started ***without depressing the accelerator.***

4. Do not wait for the engine to warm up while the vehicle remains stationary.

   Start driving at moderate engine speeds. (Steep accelerating and decelerating should be avoided.)

If the engine stalls while the vehicle is in motion, do not attempt to move the shift lever to the P (Park) position. If traffic and road conditions permit, you may put the shift lever in the N (Neutral) position while the vehicle is still moving and turn the ignition switch to the START position in an attempt to restart the engine.

⚠ CAUTION - Starter

Do not engage the starter for more than 10 seconds. If the engine stalls or fails to start, wait 5 to 10 seconds before re-engaging the starter. Improper use of the starter may damage it.

Starting the engine with a smart key (if equipped)

1. Carry the smart key or leave it inside the vehicle.
2. Make sure the parking brake is firmly applied.
3. Place the transmission shift lever in P (Park).
4. Press the ENGINE START/STOP button while depressing the brake pedal.
5. In extremely cold weather (below 0°F / -18°C) or after the vehicle has not been operated for several days, let the engine warm up without depressing the accelerator.

Whether the engine is cold or warm, it should be started without depressing the accelerator.

- Even if the smart key is in the vehicle, but is far away from you, the engine may not start.
- When the ENGINE START/STOP button is in the ACC position or above, if any door is opened, the system checks for the smart key. If the smart key is not in the vehicle,the " KEY OUT " or " " indicator will blink or the warning "Key not in vehicle" will illuminate on the LCD display. And if all doors are closed, the chime will sound for 5 seconds. The indicator or warning will turn off while the vehicle is moving. Always have the smart key with you.

The engine will start only when the smart key is in the vehicle.

⚠ WARNING - Unintended vehicle movement

Never leave the smart key in the vehicle with children or vehicle occupants who are unfamiliar with the vehicle operation. Pushing the ENGINE START/STOP button while the smart key is in the vehicle may result in unintended engine activation and/or unintended vehicle movement.

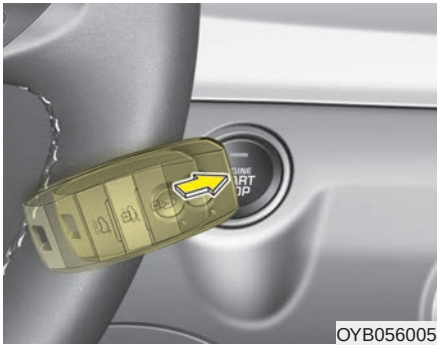
OYB056005

- If the battery is weak or the smart key does not work correctly, you can start the engine by pressing the engine start/stop button with the smart key.
- When the stop lamp fuse is blown, you cannot start the engine normally. Replace the fuse with a new one. If it is not possible, you can start the engine by pressing the ENGINE START/STOP button for 10 seconds while it is in the ACC position. The engine can start without depressing the brake pedal. But for your safety always depress the brake pedal before starting the engine.

⚠ CAUTION

Do not press the ENGINE START/ STOP button for more than 10 seconds except when the stop lamp fuse is blown.

MANUAL TRANSMISSION (IF EQUIPPED)

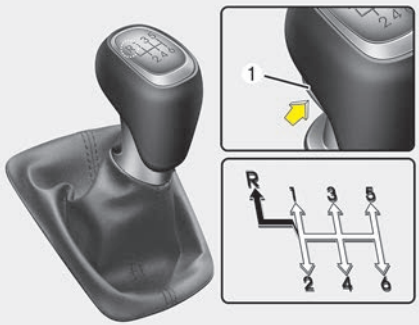

⇨ The shift lever can be moved without-pressing the button.

➡ The button (1) should be pressed when moving the shift lever into reverse.

OYB056058

Manual Transmission operation

The manual transmission has 6 forward gears.

This shift pattern is imprinted on the shift knob. The transmission is fully synchronized in all forward gears so shifting to either a higher or a lower gear is easily accomplished.

Depress the clutch pedal down fully while shifting, then release it slowly.

If your vehicle is equipped with an ignition lock switch, the engine will not start when starting the engine without depressing the clutch pedal.

The shift lever must be returned to the neutral position before shifting into R (Reverse). The button (1) located below the shift knob must be pulled upward while moving the shift lever to the R (Reverse) position.

Make sure the vehicle is completely stopped before shifting into R (Reverse).

Never operate the engine with the tachometer (rpm) in the red zone.

⚠ CAUTION - Downshifting

- ***When downshifting from fifth gear to fourth gear, caution should be taken not to inadvertently press the shift lever sideways in such a manner that the second gear is engaged. Such a drastic downshift may cause the engine speed to increase to the point that the tachometer will enter the red-zone. Such over-revving of the engine and transmission may possibly cause engine damage.***
- ***Do not downshift more than 2 gears or downshift the gear when the engine is running at high speed (5,000 RPM or higher). Such a downshifting may damage the engine, clutch and the transmission.***

- During cold weather, shifting may be difficult until the transmission lubricant is warmed up. This is normal and not harmful to the transmission.
- If you've come to a complete stop and it's hard to shift into 1st or R (Reverse), leave the shift lever at neutral position and release the clutch. Depress the clutch pedal and then shift into 1st or R (Reverse) gear position.

⚠ CAUTION - Premature wear

Do not use the shift lever as a handrest during driving, as this can result in premature wear of the transmission shift forks.

⚠ CAUTION

- ***To prevent possible damage to the clutch system, do not start with the 2nd (second) gear engaged except when you start on a slippery road.***
- ***If the clutch pedal is released rapidly after shifting into 1st or R(Reverse), it could cause the engine to stall and lead to an accident.***
- ***The clutch pedal should be fully depressed. When the pedal is released, make sure not to depress the pedal again before it returns to the normal position. Failure to do so repeatedly may cause damage to the clutch system.***
- ***Do not overload the vehicle. Driving with the vehicle overloaded could cause abnormal friction heat to the clutch disk and damage the clutch cover and disk.***

⚠ WARNING - Shift lever position

- **Before leaving the driver's seat, always set the parking brake fully and shut the engine off. Then make sure the transmission is shifted into 1st gear when the vehicle is parked on a level or uphill grade, and shifted into R (Reverse) on a downhill grade. Unexpected and sudden vehicle movement can occur if these precautions are not followed in the order identified.**
- **Do not use the engine brake (shifting from a high gear to lower gear) rapidly on slippery roads. The vehicle may slip causing an accident.**

Using the clutch

The clutch should be depressed all the way to the floor before shifting, then released slowly. The clutch pedal should always be fully released while driving. Do not rest your foot on the clutch pedal while driving. This can cause unnecessary wear. Do not partially engage the clutch to hold the vehicle on an incline. This causes unnecessary wear. Use the foot brake or parking brake to hold the vehicle on an incline. Do not operate the clutch pedal rapidly and repeatedly.

Downshifting

When you must slow down in heavy traffic or while driving up steep hills, downshift before the engine starts to labor. Downshifting reduces the chance of stalling and gives better acceleration when you need to increase your speed again. When the vehicle is traveling down steep hills, downshifting helps maintain safe speed and prolongs brake life.

Good driving practices

- Never take the vehicle out of gear and coast down a hill. This is extremely hazardous. Always leave the vehicle in gear.
- Don't "ride" the brakes. This can cause them to overheat and malfunction. Instead, when you are driving down a long hill, shift to a lower gear. When you do this, engine braking will help slow down the vehicle.
- Slow down before shifting to a lower gear. This will help avoid over-revving the engine, which can cause damage.
- Slow down when you encounter cross winds. This gives you much better control of your vehicle.
- Be sure the vehicle is completely stopped before you attempt to shift into R (Reverse). The transmission can be damaged if you do not.

⚠ WARNING

- **Exercise extreme caution when driving on a slippery surface. Be especially careful when braking, accelerating or shifting gears. On a slippery surface, an abrupt change in vehicle speed can cause the drive wheels to lose traction and the vehicle to go out of control.**
- **Always buckle-up! In a collision, an unbelted occupant is significantly more likely to be seriously injured or killed than a properly belted occupant.**
- **Never exceed posted speed limits.**
- **Avoid high speeds when cornering or turning. High speed cornering and turning increases the risk of vehicle rollover due to loss of vehicle control. Rollover accidents are extremely violent and unpredictable.**

AUTOMATIC TRANSMISSION (IF EQUIPPED)

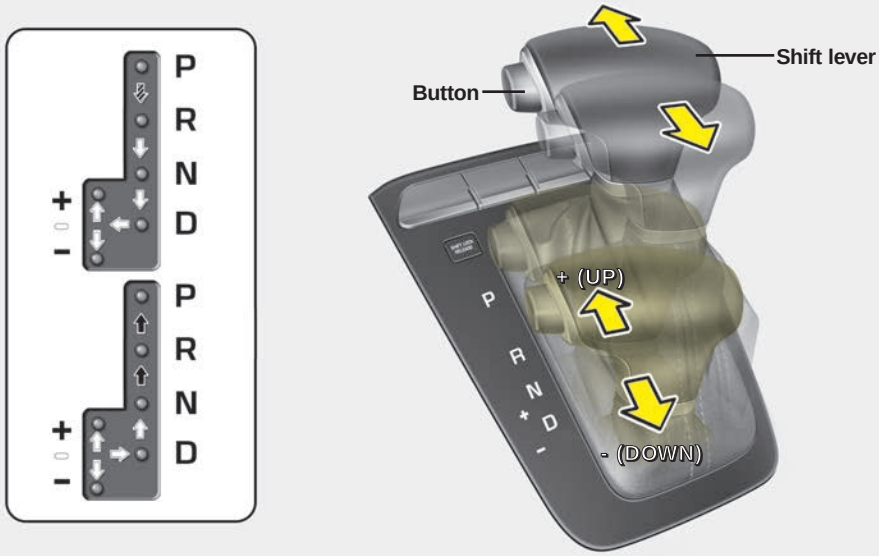

To shift, depress the brake pedal and press the button.

Press the button when shifting.

The shift lever can be shifted freely.

OYB056071

Automatic Transmission operation

The automatic transmission has 6 forward speeds and one reverse speed. The individual speeds are selected automatically, depending on the position of the shift lever.

✻ NOTICE

For the first few shifts on a new vehicle, if the battery has been disconnected, may be somewhat abrupt. This is a normal condition, and the shifting sequence will adjust after shifts are cycled a few times by the TCM (Transmission Control Module) or PCM (Powertrain Control Module).

For smooth operation, depress the brake pedal when shifting from N (Neutral) to a forward or reverse gear.

⚠ WARNING - Automatic Transmission

Before leaving the driver's seat, always make sure the shift lever is engaged in P (Park), set the parking brake fully and shut the engine off. Unexpected and sudden vehicle movement may occur if these precautions are not followed.

⚠ WARNING

- **ALWAYS check the surrounding areas near your vehicle for people, especially children, before shifting a vehicle into D (Drive) or R (Reverse).**
- **Do not use engine braking (rapidly shifting from a high gear to lower gear) on slippery roads. The vehicle may slip causing an accident.**

⚠ CAUTION - Transmission

To avoid damage to your transmission, do not accelerate the engine in R (Reverse) or any forward gear position with the brakes on. The transmission may be damaged if you shift into P (Park) while the vehicle is in motion.

When stopped on an incline, do not hold the vehicle stationary with engine power.

Use the service brake or the parking brake.

Transmission ranges

The indicator light in the instrument cluster displays the shift lever position when the ignition switch is in the ON position.

P (Park)

Always come to a complete stop before shifting into P (Park). This position locks the transmission and prevents the front wheels from rotating.

⚠ WARNING

Shifting into P (Park) while the vehicle is in motion will cause the drive wheels to lock which will cause you to lose control of the vehicle.

R (Reverse)

Use this position to drive the vehicle backward.

⚠ CAUTION - Shifting

Always come to a complete stop before shifting into or out of R (Reverse); you may damage the transmission if you shift into R (Reverse) while the vehicle is in motion, except when "Rocking the Vehicle" explained in this chapter.

N (Neutral)

The wheels and transmission are not engaged. The vehicle will roll freely even on the slightest incline unless the parking brake or service brakes are applied.

- Parking in N (Neutral) gear

Follow the steps below when parking and you want the vehicle to move when pushed.

1. After parking your vehicle, step on the brake pedal and move the shift lever to [P] with the ignition button in [ON] or while the engine is running.
2. If the parking brake is applied unlock the parking brake.
3. While pressing the brake pedal, turn the ignition button [OFF].
   - For smart key equipped vehicles, the ignition switch can be moved to [OFF] only when the shift lever is in [P].
4. Change the gear shift lever to [N] (Neutral) while pressing the brake pedal and pushing [SHIFT LOCK RELEASE] button or inserting a tool (e.g. flathead screw-driver) into the [SHIFT LOCK RELEASE] access hole at the same time. Then, the vehicle will move when external force is applied.

⚠ WARNING

- **With the exception of parking in neutral gear, always park the vehicle in [P] (Park) for safety and engage the parking brake.**
- **Before parking in N (Neutral) gear, first make sure the parking ground is level and flat. Do not park in [N] gear on any slopes or gradients.**

  If parked and left in [N], the vehicle may move and cause serious damage and injury.

D (Drive)

This is the normal forward driving position. The transmission will automatically shift through a 6-gear sequence, providing the best fuel economy and power.

For extra power when passing another vehicle or climbing grades, depress the accelerator fully, at which time the transmission will automatically downshift to the next lower gear.

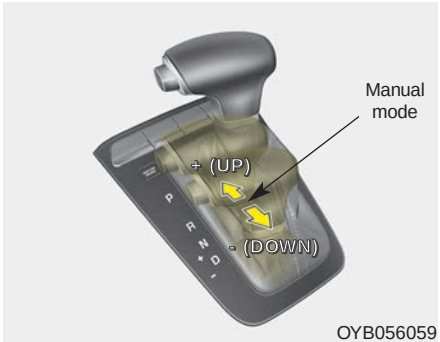

Manual mode

Whether the vehicle is stopped or in motion, manual mode is selected by pushing the shift lever from the D (Drive) position into the manual gate. To return to D (Drive) range operation, push the shift lever back into the main gate.

In manual mode, moving the shift lever backwards and forwards will allow you to make gearshifts rapidly. In contrast to a manual transmission, the manual mode allows gearshifts with the accelerator pedal depressed.

Up (+) : Push the lever forward once to shift up one gear.

Down (-) : Pull the lever backwards once to shift down one gear.

- In manual mode, the driver must execute upshifts in accordance with road conditions, being careful to keep the engine speed below the red zone.
- In manual mode, only the 6 forward gears can be selected. To reverse or park the vehicle, move the shift lever to the R (Reverse) or P (Park) position as required.
- In manual mode, downshifts are made automatically when the vehicle slows down. When the vehicle stops, 1st gear is automatically selected.
- In manual mode, when the engine rpm approaches the red zone, shift points are varied to upshift automatically.

- To maintain the required levels of vehicle performance and safety, the system may not execute certain gearshifts when the shift lever is operated.
- When driving on a slippery road, push the shift lever forward into the +(up) position. This causes the transmission to shift into the 2nd gear which is better for smooth driving on a slippery road. Push the shift lever to the -(down) side to shift back to the 1st gear.

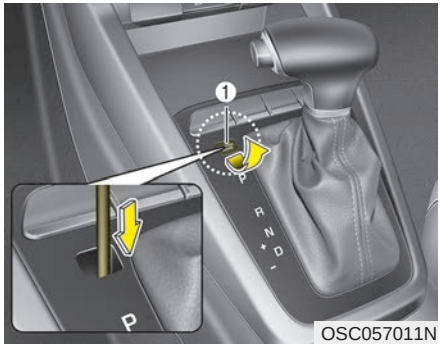

OSC057011N

Shift-lock override (with smart key system)

If the shift lever cannot be moved from the P (Park) position into the R (Reverse) position with the brake pedal depressed, continue depressing the brake, then do the following:

1. Carefully remove the cap covering the shift-lock access hole (1).
2. Insert screwdriver into the access hold and press down on the screwdriver.
3. Move the shift lever.
4. Have your vehicle inspected by an authorized Kia dealer immediately.

Ignition key interlock system (if equipped)

The ignition key cannot be removed unless the shift lever is in the P (Park) position.

Good driving practices

- Never move the shift lever from P (Park) or N (Neutral) to any other position with the accelerator pedal depressed.
- Never move the shift lever into P (Park) when the vehicle is in motion.

  Be sure the vehicle is completely stopped before you attempt to shift into R (Reverse) or D (Drive).
- Slow down before shifting to a lower gear. Otherwise, the lower gear may not be engaged.
- Always use the parking brake. Do not depend on placing the transmission in P (Park) to keep the vehicle from moving.
- Optimum vehicle performance and economy is obtained by smoothly depressing and releasing the accelerator pedal.

Moving up a steep grade from a standing start

To move up a steep grade from a standing start, depress the brake pedal, release the parking brake, and shift the shift lever to D (Drive). Select the appropriate gear depending on load weight and steepness of the grade, and release the parking brake. Depress the accelerator gradually while releasing the service brakes.

⚠ WARNING

Exercise extreme caution when driving on a slippery surface. Be especially careful when braking, accelerating or shifting gears. On a slippery surface, an abrupt change in vehicle speed can cause the drive wheels to lose traction and the vehicle to go out of control.

BRAKE SYSTEM

Power brakes

Your vehicle has power-assisted brakes that adjust automatically through normal usage.

In the event that the power-assisted brakes lose power because of a stalled engine or some other reason, you can still stop your vehicle by applying greater force to the brake pedal than you normally would. The stopping distance, however, will be longer.

When the engine is not running, the reserve brake power is partially depleted each time the brake pedal is applied. Do not pump the brake pedal when the power assist has been interrupted.

Pump the brake pedal only when necessary to maintain steering control on slippery surfaces.

⚠ CAUTION - Brake pedal

Do not drive with your foot resting on the brake pedal. This will create abnormally high brake temperatures which can cause excessive brake lining and pad wear.

⚠ WARNING - Steep hill braking

Avoid continuous application of the brakes when descending a long or steep hill by shifting to a lower gear. Continuous brake application will cause the brakes to overheat and could result in a temporary loss of braking performance.

Wet brakes may impair the vehicle's ability to safely slow down; the vehicle may also pull to one side when the brakes are applied. Applying the brakes lightly will indicate whether they have been affected in this way. Always test your brakes in this fashion after driving through deep water. To dry the brakes, apply them lightly while maintaining a safe forward speed until brake performance returns to normal.

In the event of brake failure

If service brakes fail to operate while the vehicle is in motion, you can make an emergency stop with the parking brake. The stopping distance, however, will be much greater than normal.

⚠ WARNING - Parking brake

Avoid applying the parking brake to stop the vehicle while it is moving except in an emergency situation. Applying the parking brake while the vehicle is moving at normal speeds can cause a sudden loss of control of the vehicle. If you must use the parking brake to stop the vehicle, use great caution in applying the brake.

Disc brakes wear indicator

When your brake pads are worn and new pads are required, you will hear a high-pitched warning sound from your front brakes or rear brakes (if equipped). You may hear this sound come and go or it may occur whenever you depress the brake pedal.

Please remember that some driving conditions or climates may cause a brake squeal when you first apply (or lightly apply) the brakes. This is normal and does not indicate a problem with your brakes.

Always replace the front or rear brake pads as pairs.

⚠ CAUTION - Replace brake pads

Do not continue to drive with worn brake pads. Continuing to drive with worn brake pads can damage the braking system and result in costly brake repairs.

⚠ WARNING - Brake wear

Do not ignore high pitched wear sounds from your brakes. If you ignore this audible warning, you will eventually lose braking performance, which could lead to a serious accident.

Rear drum brakes (if equipped)

Your rear drum brakes do not have wear indicators. Therefore, have the rear brake linings inspected if you hear a rear brake rubbing noise. Also have your rear brakes inspected each time you change or rotate your tires and when you have the front brakes replaced.

Parking brake

Applying the parking brake

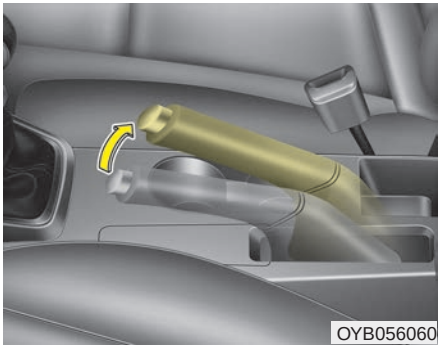

To engage the parking brake, first apply the foot brake and then without pressing the release button in, pull the parking brake lever up as far as possible. In addition it is recommended that when parking the vehicle on a gradient, the shift lever should be positioned in the appropriate low gear for Manual Transmission vehicles or in the P (Park) position for Automatic Transmission vehicles.

⚠ CAUTION - Parking brake

Driving with the parking brake applied will cause excessive brake pad (or lining) and brake rotor wear.

Releasing the parking brake

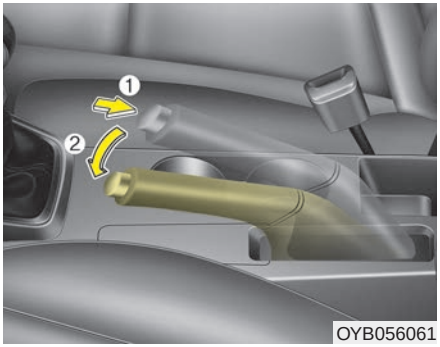

To release the parking brake, first apply the foot brake and pull up the parking brake lever slightly. Secondly, press the release button (1) and lower the parking brake lever (2) while holding the button.

⚠ WARNING - Parking brake use

- **Never allow a passenger to touch the parking brake. If the parking brake is released unintentionally, serious injury may occur.**
- **All vehicles should always have the parking brake fully engaged when parking to avoid inadvertent movement of the vehicle which can injure occupants or pedestrians.**

- If your vehicle is equipped with an Automatic Transmission, don't let your vehicle creep forward. To avoid cleeping forward, keep your foot firmly on the brake pedal when the vehicle is stopped.
- Be cautious when parking on a hill. Firmly engage the parking brake and place the shift lever in P (Automatic Transmission) or in first or revers gear (Manual Transmission). If your vehicle is facing downhill, turn the front wheels into the curb to help keep the vehicle from rolling. If your vehicle is facing uphill, turn the front wheels away from the curb to help keep the vehicle from rolling. If there is no curb or if it is required by other conditions to keep the vehicle from rolling, block the wheels.

- Under some conditions your parking brake can freeze in the engaged position. This is most likely to happen when there is an accumulation of snow or ice aroud or near the rear brakes or if the brakes are wet. If there is a risk that the parking brake may freeze, apply it only temporarily while you put the shift lever in P (Automatic Transmission) or in first or reverse gear (Manual Transmission) and block the rear wheels so the vehicle cannot roll. Then release the parking brake.
- Do not hold the vehicle on the upgrade with the accelerator pedal. This can cause the transmission to overheat. Always use the brake pedal or parking brake.

W-75

Check the brake warning light by turning the ignition switch ON (do not start the engine). This light will illuminate when the parking brake is applied with the ignition switch in the START or ON position.

Before driving, be sure the parking brake is fully released and the brake warning light is off.

If the brake warning light remains on after the parking brake is released while the engine is running, there may be a malfunction in the brake system. Immediate attention is necessary.

If at all possible, stop driving the vehicle immediately. If that is not possible, use extreme caution while operating the vehicle and only continue to drive the vehicle until you can reach a safe location or repair shop.

Anti-lock brake system (ABS)

ABS (or ESC) will not prevent accidents due to improper or dangerous driving maneuvers. Even though vehicle control is improved during emergency braking, always maintain a safe distance between you and objects ahead. Vehicle speeds should always be reduced during extreme road conditions.

The vehicle should be driven at reduced speeds in the following circumstances:

- When driving on rough, gravel or snow-covered roads
- When driving on roads where the road surface is pitted or has different surface heights.

Driving in these conditions increases the stopping distance for your vehicle.

The ABS continuously senses the speed of the wheels. If the wheels are going to lock, the ABS system repeatedly modulates the hydraulic brake pressure to the wheels.

When you apply your brakes under conditions which may lock the wheels, you may hear a “tik-tik” sound from the brakes, or feel a corresponding sensation in the brake pedal. This is normal and it means your ABS is active.

In order to obtain the maximum benefit from your ABS in an emergency situation, do not attempt to modulate your brake pressure and do not try to pump your brakes. Press your brake pedal as hard as possible or as hard as the situation allows the ABS to control the force being delivered to the brakes.

✻ NOTICE

A click sound may be heard in the engine compartment when the vehicle begins to move after the engine is started. These conditions are normal and indicate that the anti-lock brake system is functioning properly.

- Even with the anti-lock brake system, your vehicle still requires sufficient stopping distance. Always maintain a safe distance from the vehicle in front of you.
- Always slow down when cornering. The anti-lock brake system cannot prevent accidents resulting from excessive speeds.
- On loose or uneven road surfaces, operation of the anti-lock brake system may result in a longer stopping distance than for vehicles equipped with a conventional brake system.

W-78

The ABS warning light will stay on for approximately 3 seconds after the ignition switch is ON. During that time, the ABS will go through self-diagnosis and the light will go off if everything is normal. If the light stays on, you may have a problem with your ABS but your regular brakes will work normally. Contact an authorized Kia dealer as soon as possible.

- When you drive on a road with poor traction, such as an icy road, and operated your brakes continuously, the ABS will be active continuously and the ABS warning light may illuminate. Pull your vehicle over to a safe place and stop the engine.
- Restart the engine. If the ABS warning light goes off, then your ABS system is normal. Otherwise, you may have a problem with the ABS. Contact an authorized Kia dealer as soon as possible.

✻ NOTICE

When you jump start your vehicle because of a drained battery, the engine may not run as smoothly and the ABS warning light may turn on at the same time. This happens because of the low battery voltage. It does not mean your ABS has malfunctioned.

- **Do not pump your brakes!**
- **Have the battery recharged before driving the vehicle.**

Electronic stability control (ESC)

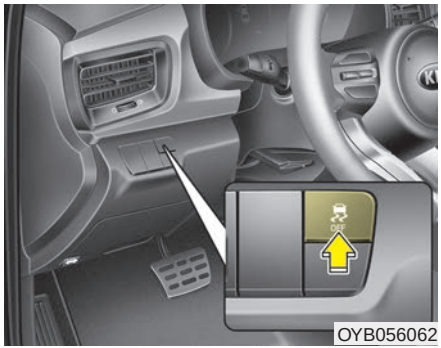
OYB056062

The Electronic Stability control (ESC) system is designed to stabilize the vehicle during cornering maneuvers. ESC checks where you are steering and where the vehicle is actually going. ESC applies the brakes on individual wheels and intervenes with the engine management system to stabilize the vehicle.

Electronic stability control (ESC) will not prevent accidents. Excessive speed in turns, abrupt maneuvers and hydroplaning on wet surfaces can still result in serious accidents. Only a safe and attentive driver can prevent accidents by avoiding maneuvers that cause the vehicle to lose traction. Even with ESC installed, always follow all the normal precautions for driving - including driving at safe speeds for the conditions.

The Electronic Stability Control (ESC) system is an electronic system designed to help the driver maintain vehicle control under adverse conditions. It is not a substitute for safe driving practices. Factors including speed, road conditions and driver steering input can all affect whether ESC will be effective in preventing a loss of control. It is still your responsibility to drive and corner at reasonable speeds and to leave a sufficient margin of safety.

When you apply your brakes under conditions which may lock the wheels, you may hear a “tik-tik” sound from the brakes, or feel a corresponding sensation in the brake pedal. This is normal and it means your ESC is active.

⚠ WARNING

For maximum protection, always wear your seat belt. No system, no matter how advanced, can compensate for all driver error and/or driving conditions. Always drive responsibly.

ESC operation

ESC ON condition

-

- When the ignition is turned ON, ESC and ESC OFF indicator lights illuminate for approximately 3 seconds, then ESC is turned on.
- Press the ESC OFF button for at least half a second after turning the ignition ON to turn ESC off. (ESC OFF indicator will illuminate). To turn the ESC on, press the ESC OFF button (ESC OFF indicator light will go off).
- When starting the engine, you may hear a slight ticking sound. This is the ESC performing an automatic system self-check and does not indicate a problem.

When operating

When the ESC is in operation, ESC indicator light blinks.

- When the Electronic Stability Control is operating properly, you can feel a slight pulsation in the vehicle. This is only the effect of brake control and indicates nothing unusual.
- When moving out of the mud or slippery road, pressing the accelerator pedal may not cause the engine rpm (revolutions per minute) to increase.

ESC operation off

ESC OFF state

This car has 2 kinds of ESC off states.

If the engine stops when ESC is off, ESC remains off. Upon restarting the engine, the ESC will automatically turn on again.

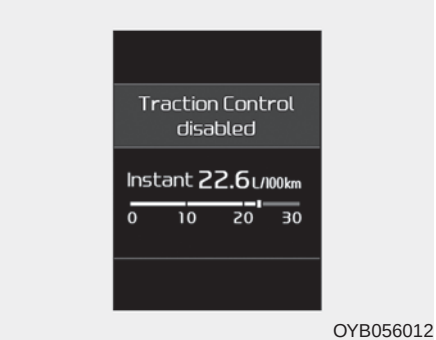

OYB056012

- **ESC off state 1 : “Traction Control disabled”**

To turn off the traction control function and only operate the brake control function of the ESC, press the ESC OFF button (ESC OFF) for less than 3 seconds and the ESC OFF indicator light (ESC OFF) will illuminate. At this state, only the brake function will operate.

OYB056013

- **ESC off state 2 : "Traction & Stability Control disabled"**

To turn off the traction control function and the brake control function of the ESC, press the ESC OFF button (ESC OFF) for more than 3 seconds. ESC OFF indicator light (ESC OFF) will illuminate and ESC OFF warning chime will sound. At this state, the car stability control function does not operate any more.

Indicator light

■ ESC indicator light

■ ESC OFF indicator light

When the ignition switch is turned ON, the indicator light illuminates, then goes off if ESC system is operating normally.

The ESC indicator light blinks whenever ESC is operating or illuminates when ESC fails to operate.

The ESC OFF indicator light comes on when the ESC is turned off with the button.

⚠ WARNING

Driving with varying tire or wheel sizes may cause the ESC system to malfunction. When replacing tires, make sure they are the same size as your original tires.

⚠ WARNING - Electronic stability control

Drive carefully even though your vehicle has Electronic Stability Control. It can only assist you in maintaining control under certain circumstances.

ESC OFF usage

When driving

- It's a good idea to keep the ESC turned on for daily driving whenever possible.
- To turn ESC off while driving, press the ESC OFF button while driving on a flat road surface.

⚠ WARNING - Operating ESC

Never press the ESC OFF button while ESC is operating.

If the ESC is turned off while ESC is operating, the vehicle may go out of control.

Hill-start assist control (HAC)

The Hill-start Assist Control (HAC) is designed to prevent the vehicle from rolling back by applying the brakes automatically for about 2 seconds. The brakes are released when the accelerator pedal is depressed or after about 2 seconds.

The HAC is activated only for about 2 seconds, so when the vehicle is starting off always depress the accelerator pedal.

⚠ WARNING - Maintaining Brake Pressure on Incline

HAC does not replace the need to apply brakes while stopped on an incline. While stopped, make sure you maintain brake pressure sufficient to prevent your vehicle from rolling backward and causing an accident. Don't release the brake pedal until you are ready to accelerate forward.

⚠ CAUTION

- ***The HAC does not operate when the transmission shift lever is in the P (Park) or N (Neutral) position.***
- ***The HAC activates even though the ESC is off but it does not activate when the ESC has malfunctioned.***

Vehicle stability management (VSM)

This system is designed to provide further enhancements to vehicle stability and steering responses when a vehicle is driving on a slippery road or a vehicle detected changes in coefficient of friction between right wheels and left wheels when braking.

VSM operation

When the VSM is in operation, ESC indicator light ( ) blinks.

When the vehicle stability management is operating properly, you can feel a slight pulsation in the vehicle and/or abnormal steering responses (EPS). This is only the effect of brake and EPS control and indicates nothing unusual.

The VSM does not operate when:

- Driving on bank roads such as gradient or incline
- Driving in reverse
- ESC OFF indicator light ( ) remains on the instrument cluster
- EPS indicator light remains on the instrument cluster

VSM operation off

If you press the ESC OFF button to turn off the ESC, the VSM will also cancel and the ESC OFF indicator light ( ) illuminates.

To turn on the VSM, press the button again. The ESC OFF indicator light goes out.

⚠ WARNING - Vehicle stability management

Drive carefully even though your vehicle has Vehicle stability management. It can only assist you in maintaining control under certain circumstances.

Malfunction indicator

The VSM can be deactivated even if you don't cancel the VSM operation by pressing the ESC OFF button. It indicates that a malfunction has been detected somewhere in the Electric Power Steering system or VSM system. If the ESC indicator light ( ) or EPS warning light remains on, take your vehicle to an authorized Kia dealer and have the system checked.

- The VSM is designed to function above approximately 15 km/h (9 mph) on curves.
- The VSM is designed to function above approximately 30 km/h (18 mph) when a vehicle is braking on a split-mu road. The split-mu road is made of surfaces which have different friction forces.
- Your vehicle is designed to activate according to the driver's intention, even with installed VSM. Always follow all the normal precautions for driving at safe speeds for the conditions – including driving in inclement weather and on a slippery road.

⚠ WARNING

The Vehicle Stability Management system is not a substitute for safe driving practices but a supplementary function only. It is the responsibility of the driver to always check the speed and the distance to the vehicle ahead. Always hold the steering wheel firmly while driving.

⚠ WARNING - Tire/Wheel size

When replacing tires and wheels, make sure they are the same size as the original tires and wheels installed. Driving with varying tire or wheel sizes may affect the vehicle's handling.

⚠ WARNING

For maximum protection, always wear your seat belt. No system, no matter how advanced, can compensate for all driver error and/or driving conditions. Always drive responsibly.

Good braking practices

- Check to be sure the parking brake is not engaged and that the parking brake indicator light is out before driving away.
- Driving through water may get the brakes wet. They can also get wet when the vehicle is washed. Wet brakes can be dangerous! Your vehicle will not stop as quickly if the brakes are wet. Wet brakes may cause the vehicle to pull to one side.

  To dry the brakes, apply the brakes lightly until the braking action returns to normal, taking care to keep the vehicle under control at all times. If the braking action does not return to normal, stop as soon as it is safe to do so and call an authorized Kia dealer for assistance.
- Don't coast down hills with the vehicle out of gear. This is extremely hazardous. Keep the vehicle in gear at all times, use the brakes to slow down, then shift to a lower gear so that engine braking will help you maintain a safe speed.
- Don't "ride" the brake pedal. Resting your foot on the brake pedal while driving can be dangerous because the brakes might overheat and lose their effectiveness. It also increases the wear of the brake components.
- If a tire goes flat while you are driving, apply the brakes gently and keep the vehicle pointed straight ahead while you slow down. When you are moving slowly enough for it to be safe to do so, pull off the road and stop in a safe place.
- If your vehicle is equipped with an Automatic Transmission, don't let your vehicle creep forward. To avoid creeping forward, keep your foot firmly on the brake pedal when the vehicle is stopped.

- Be cautious when parking on a hill. Firmly engage the parking brake and place the shift lever in P (Automatic Transmission) or in first or reverse gear (Manual Transmission). If your vehicle is facing downhill, turn the front wheels into the curb to help keep the vehicle from rolling. If your vehicle is facing uphill, turn the front wheels away from the curb to help keep the vehicle from rolling. If there is no curb or if it is required by other conditions to keep the vehicle from rolling, block the wheels.
- Under some conditions your parking brake can freeze in the engaged position. This is most likely to happen when there is an accumulation of snow or ice around or near the rear brakes or if the brakes are wet. If there is a risk that the parking brake may freeze, apply it only temporarily while you put the shift lever in P (Automatic Transmission) or in first or reverse gear (Manual Transmission) and block the rear wheels so the vehicle cannot roll. Then release the parking brake.
- Do not hold the vehicle on an incline with the accelerator pedal. This can cause the transmission to overheat. Always use the brake pedal or parking brake.

FORWARD COLLISION-AVOIDANCE ASSIST (FCA) SYSTEM (RADAR TYPE) (IF EQUIPPED)

The FCA system is designed to detect and monitor a vehicle ahead in the roadway through sensors (i.e., radar) to warn the driver that a collision is imminent and, if necessary, apply emergency braking.

❊ Radar type FCA system does not operate to detect pedestrians in front.

⚠ WARNING

- Forward Collision-Avoidance Assist (FCA) Limitations

The FCA system is a supplemental system and is not a substitute for safe driving practices. It is the responsibility of the driver to always check the speed and distance to the vehicle ahead to ensure it is safety to use the FCA system.

⚠ WARNING

Take the following precautions when using the Forward Collision-Avoidance Assist (FCA) system:

- **This system is only a supplemental system and it is not intended to, nor does it replace the need for extreme care and attention of the driver. The sensing range and objects detectable by the sensors are limited. Pay attention to the road conditions at all times.**
- **NEVER drive too fast in accordance with the road conditions or while cornering.**
- **Always drive cautiously to prevent unexpected and sudden situations from occurring. FCA does not stop the vehicle completely and does not avoid collisions.**

System setting and activation

System setting

The driver can activate the FCA by placing the ignition switch to the ON position and by selecting 'User Settings' → 'Driver Assistance' → 'Forward Collision-Avoidance Assist (FCA) system'.

The FCA deactivates when the driver cancels the system setting.

The warning light illuminates on the LCD display, when you cancel the FCA system. It illuminates even with the ESC (Electronic Stability Control) OFF. The driver can monitor the FCA ON/OFF status on the LCD display. When the warning light remains ON with the FCA activated, have the system checked by an authorized Kia dealer.

The driver can select the initial warning activation time in the User Settings in the instrument cluster LCD display. The options for the initial Forward Collision Warning include the following:

- EARLY - When this condition is selected, the initial Forward Collision Warning is activated earlier than normal. If the “EARLY” warning seems to be too sensitive, change it to “NORMAL”.
- NORMAL - When this condition is selected, the initial Forward Collision Warning is activated normally.
- LATE - When this condition is selected, the initial Forward Collision Warning is activated later than normal. Select this condition only when traffic is light and you are driving at low speed.

Prerequisite for activation

The FCA will activate when the FCA is selected on the LCD display, and when the following prerequisites are satisfied:

- The ESC (Electronic Stability Control) is activated.
- The driving speed is over 10 km/h (6 mph). (The FCA only works within a certain range of vehicle speeds)
- When the FCA recognizes a vehicle in front.

⚠ WARNING

The FCA may not recognize every obstacle or provide warnings and braking in every situation, so do not rely on the FCA to stop the vehicle in instances where the driver sees an obstacle and has the ability to apply the brakes.

⚠ WARNING

Set or cancel FCA with controlling switches on steering wheel after stopping the vehicle in a safe place.

- The FCA automatically activates when you turn the vehicle on.

  The driver can deactivate the FCA by canceling the system setting on the LCD display.
- The FCA automatically deactivates when canceling the ESC. When the ESC is canceled, the FCA cannot be activated on the LCD display. In this case, the FCA warning light will illuminate, but it does not indicate a malfunction.

FCA warning message and system control

The FCA produces warning messages, warning alarms, and emergency braking based on the level of risk of a frontal collision, such as when a vehicle ahead suddenly brakes.

Forward Warning (1st warning)

OYB056050

The warning message appears on the LCD display with the warning.

Collision Warning (2nd warning)

OYB056051

- The warning message appears on the LCD display with the warning chime.
- The vehicle will reduce its speed to a certain limit.

  - The brake activates gradually for vehicles ahead.

  - The brake control activates within an arranged limit to ease the impact from a collision.

Emergency braking (3rd warning)

OYB056073

- The warning message appears on the LCD display with the warning chime.
- The vehicle will reduce its speed to a certain limit.

  - The brake control activates within an arranged limit to ease the impact from a collision. Maximum brake control is activated just before the collision.

Brake operation

- In an urgent situation, the braking system enters into the ready status for prompt reaction against the driver's depressing the brake pedal.
- The FCA system provides additional braking power for optimum braking performance, when the driver depresses the brake pedal.
- The braking control is automatically deactivated, when the driver sharply depresses the accelerator pedal, or when the driver abruptly turns the steering wheel.
- The braking control is automatically canceled when risk factors disappear.

⚠ CAUTION

The driver should always exercise caution when operating the vehicle, even though there is no warning message or warning alarm.

⚠ WARNING

The FCA is a supplemental system and cannot completely stop the vehicle in all situations or avoid all collisions. It is the responsibility of the driver to safely drive and control the vehicle.

⚠ WARNING

Never deliberately drive dangerously to activate the system as such conduct increases the risk of an accident.

⚠ WARNING

The FCA system assesses the risk of a collision by monitoring several variables, such as the distance to the vehicle ahead, the speed of the vehicle ahead, and the driver's operation of the vehicle. Certain conditions such as inclement weather and road conditions may affect the operation of the FCA system.

Sensor to detect the distance from the vehicle in front (front radar)

The sensor is to maintain a certain distance from the vehicle in front. However, a sensor covered or dirty with foreign substances, such as snow and rain, adversely affects the sensing performance. It may even temporarily cancel the FCA. Always keep the sensor clean.

Warning message and warning light

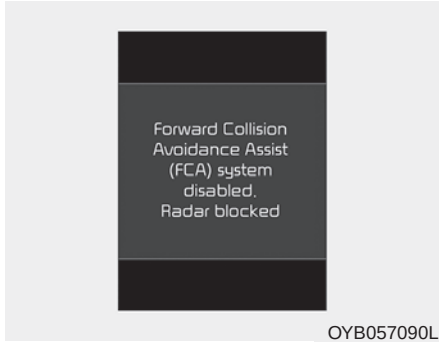

When the sensor is covered or dirty with foreign substances, such as snow or rain, the FCA operation may temporarily stop. In this case, a warning message will appear to notify the driver.

To operate the FCA again, remove the foreign substances.

✻ NOTICE

- **Do not install any accessories, such as a license plate bracket or bumper sticker near the sensor area. Do not replace the bumper by yourself. Doing so may adversely affect the sensing performance.**
- **Always keep the sensor/bumper area clean.**
- **Use only a soft cloth to wash the vehicle. Also, do not spray highly pressurized water on the sensor installed on the bumper.**
- **Be careful not to apply unnecessary force on the frontal sensor area. When the sensor moves out of the correct position due to external force, the system may not operate correctly even without the warning light or message. In this case, have the vehicle inspected by an authorized Kia dealer.**

(Continued)

(Continued)

- **Use only the genuine Kia sensor cover. Do not apply paint on the sensor cover.**
- **Do not remove or impact the radar components.**
- **If the audio volume is too high, you may not be able to hear a warning alarm from the FCA system.**

System malfunction

- When the FCA is not working properly, the FCA warning light (🚗) will illuminate and the warning message (“Check FCA system”) will appear for a few seconds. After the message disappears, the master warning light (⚠) will illuminate. In this case, have the vehicle inspected by an authorized Kia dealer.
- The FCA warning message may appear along with the illumination of the ESC warning light.

⚠ WARNING

The FCA is only a supplemental system for the driver’s convenience.

It is the driver's responsibility to control the vehicle. Do not solely depend on the FCA system. Rather, maintain a safe braking distance, and, if necessary, depress the brake pedal to lower the driving speed.

⚠ WARNING

- **Due to sensing limitation, the FCA may not produce warning messages or warning alarms in certain situations. Read the section "Limitation of the system" for more information.**
- **When there is a malfunction with the FCA, the automatic braking control does not operate even with other braking systems normally operating.**
- **The FCA system only recognizes vehicles in front of it while driving forward. It does not identify any animals or vehicles in the opposite direction.**
- **The FCA cannot recognize cross-traffic or parked vehicles presenting a side-profile.**

(Continued)

(Continued)

- **If the vehicle ahead suddenly stops, there is a risk of collision. The driver must always pay caution in case of dangerous situations.**
- **When the driver depresses the brake in a risk of collision, the FCA system may not operate.**

Limitation of the system

The FCA system is designed to monitor the vehicle ahead through radar signals to warn the driver that a collision is imminent, and if necessary, apply emergency braking. In certain situations, the radar sensor may not be able to detect the vehicle ahead. In these cases, the FCA system may not operate. The driver must pay careful attention in the following situations where the FCA operation may be limited:

Recognizing vehicles

- Sensor or sensor cover is contaminated with foreign substances.
- It heavily rains or snows.
- There is electromagnetic interference.
- Something in the path of travel deflects the radar waves.
- The vehicle in front has a narrow body. (i.e. motorcycles)
- The vehicle in front is a special vehicle, such as a heavily-loaded truck or a trailer.
- The vehicle driving is unstable.
- The radar sensor recognition is limited.
- Driving on unpaved and uneven road surfaces, or through sudden gradient changes.
- In construction zones or on railroad tracks, or there are metallic objects on the road.
- Driving indoors such as in an underground parking lot.
- Entering a tunnel or tollgate.
- There are materials which easily reflect radar signals. (guardrails, approaching vehicles, etc.)

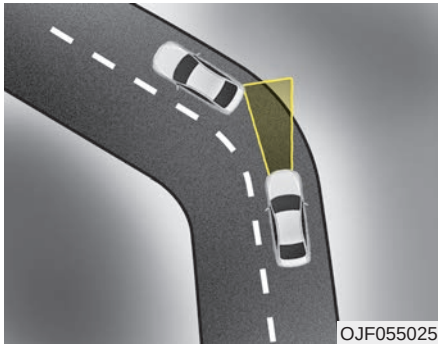

- Driving on a curve

The FCA performance may be limited while driving on a curve. The FCA may not recognize the vehicle in front even if in the same lane. It may produce the warning message and the warning alarm prematurely, or it may not produce the warning message or the warning alarm at all. When driving on a curve, exercise caution, maintain a safe braking distance, and if necessary, depress the brake pedal to reduce your driving speed in order to maintain a safe distance.

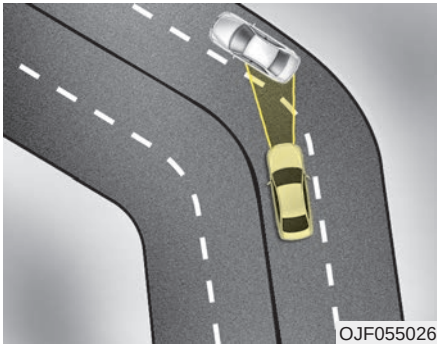

The FCA system may recognize a vehicle in an adjacent lane when driving on a curved road. In this case, the system may apply the brake. Always pay attention to road and driving conditions while driving. If necessary, depress the brake pedal to reduce your driving speed in order to maintain a safe distance. Also, when necessary, you may depress the accelerator pedal to prevent the system from unnecessarily decelerating your vehicle. Always check the traffic conditions around the vehicle.

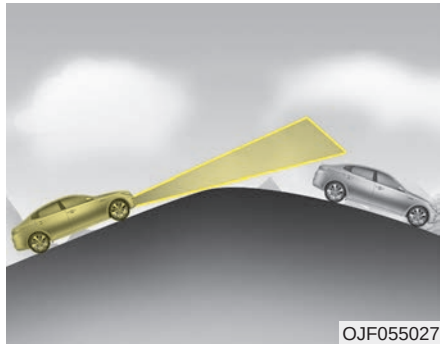

- Driving on a slope

The FCA performance may be limited while driving upward or downward on a slope, and may not recognize a vehicle in front in the same lane. It may produce the warning message and the warning alarm prematurely, or it may not produce the warning message and the warning alarm at all.

When the FCA suddenly recognizes the vehicle in front while passing over a slope, you may experience sharp deceleration.

Always keep your eyes forward while driving upward or downward on a slope, and, if necessary, depress the brake pedal to reduce your driving speed in order to maintain a safe distance.

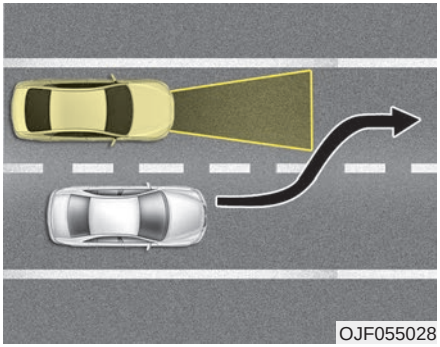
OJF055028

- Changing lanes

When a vehicle changes lanes in front of you, the FCA system may not immediately detect the vehicle, especially if the vehicle changes lanes abruptly. In this case, you must maintain a safe braking distance, and if necessary, depress the brake pedal to reduce your driving speed in order to maintain a safe distance.

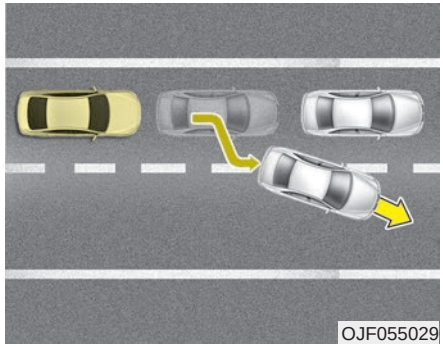
OJF055029

When driving in stop-and-go traffic, and a stopped vehicle in front of you merges out of the lane, the FCA system may not immediately detect the new vehicle that is now in front of you. In this case, you must maintain a safe braking distance, and if necessary, depress the brake pedal to reduce your driving speed in order to maintain a safe distance.

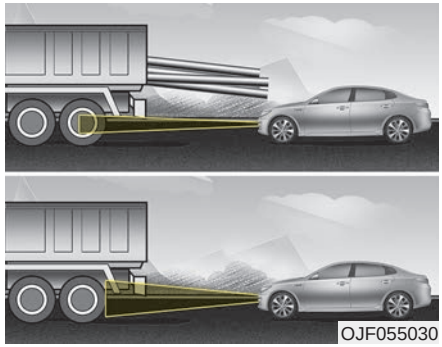
OJF055030

- Recognizing the vehicle

If the vehicle in front of you has cargo that extends rearward from the cab, or when the vehicle in front of you has higher ground clearance, additional special attention is required. The FCA system may not be able to recognize the cargo extending from the vehicle. In these instances, you must maintain a safe braking distance from the rearmost object, and if necessary, depress the brake pedal to reduce your driving speed in order to maintain distance.

⚠ WARNING - Testing the FCA

The FCA does not operate in certain situations. Thus, never test-operate the FCA against a vehicle or an object. It may cause a severe injury or even death.

⚠ WARNING - FCA and Towing

Cancel the FCA in the User Settings on the LCD display, before towing another vehicle. While towing, the brake application may adversely affect your vehicle safety.

✻ NOTICE

In some instances, the FCA system may be canceled when subjected to electromagnetic interference.

⚠ WARNING

- **Use extreme caution when the vehicle in front of you has cargo that extends rearward from the cab, or when the vehicle in front of you has higher ground clearance.**
- **The FCA system is designed to detect and monitor the vehicle ahead through sensor recognition. It is not designed to detect bicycles, motorcycles, or smaller wheeled objects such as luggage bags, shopping carts, or strollers.**

CRUISE CONTROL SYSTEM (IF EQUIPPED)

The cruise control system allows you to program the vehicle to maintain a constant speed without depressing the accelerator pedal.

This system is designed to function above approximately 30 km/h (20 mph).

If the cruise control is left on, (CRUISE indicator light in the instrument cluster illuminated) the cruise control can be switched on accidentally. Keep the cruise control system off (CRUISE indicator light OFF) when the cruise control is not in use, to avoid inadvertently setting a speed.

Use the cruise control system only when traveling on open highways in good weather.

Do not use the cruise control when driving in heavy or varying traffic, or on slippery (rainy, icy or snow-covered) or winding roads or over 6% up-hill or down-hill roads.

✻ NOTICE

- **During normal cruise control operation, when the SET switch is activated or reactivated after applying the brakes, the cruise control will energize after approximately 3 seconds. This delay is normal.**
- **To activate cruise control, depress the brake pedal at least once after turning the ignition switch to the ON position or starting the engine.**

⚠ WARNING - Misuse of Cruise Control

Do not use cruise control if the traffic situation does not allow you to drive safely at a constant speed and with sufficient distance to the vehicle in front.

Cruise control switch

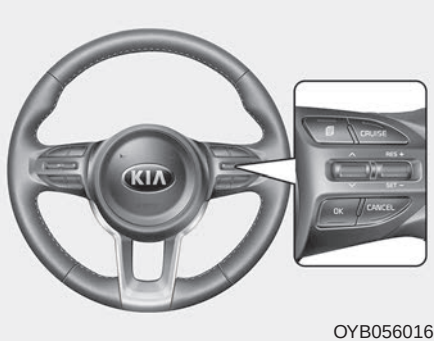

OYB056016

CRUISE : Turns cruise control system on or off.

CANCEL: Cancels cruise control operation.

RES+: Resumes or increases cruise control speed.

SET-: Sets or decreases cruise control speed.

To set cruise control speed:

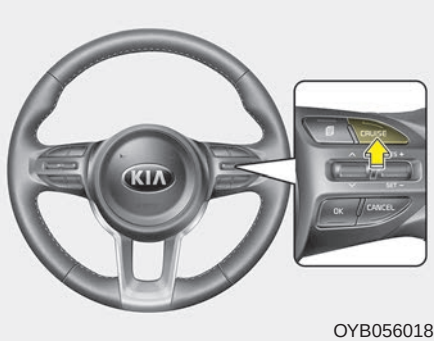

OYB056018

1. Press the CRUISE button on the steering wheel to turn the system on. The CRUISE indicator light in the instrument cluster will illuminate.
2. Accelerate to the desired speed, which must be more than 30 km/h (20 mph).

✻ NOTICE - Manual Transmission

For Manual Transmission vehicles, you should depress the brake pedal at least once to set the cruise control after starting the engine.

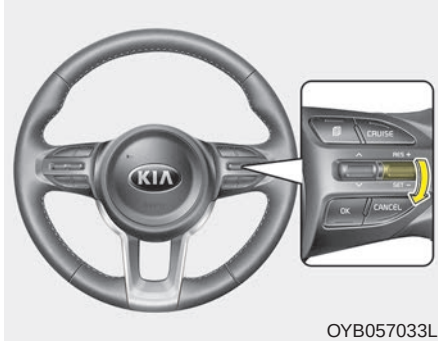

OYB057033L

3. Move the lever down (to SET-), and release it at the desired speed. The SET indicator light in the instrument cluster will illuminate. Release the accelerator pedal at the same time. The desired speed will automatically be maintained.

On a steep grade, the vehicle may slow down or speed up slightly while going uphill or downhill.

To increase cruise control set speed:

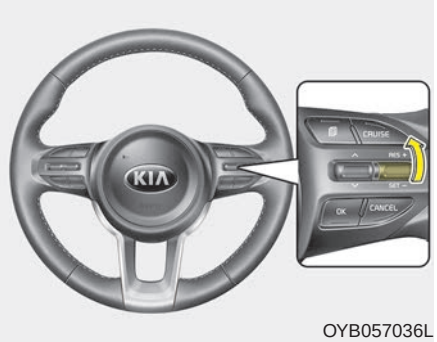

OYB057036L

Follow either of these procedures:

- Move the lever up (to RES+) and hold it. Your vehicle will accelerate. Release the lever at the speed you want.
- Move the lever up (to RES+) and release it immediately.

  The cruising speed will increase by 2 km/h (1 mph) each time you move the lever up (to RES+) in this manner.

To decrease the cruising speed:

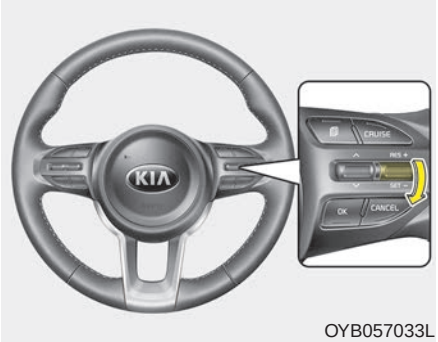

OYB057033L

Follow either of these procedures:

- Move the lever down (to SET-) and hold it. Your vehicle will gradually slow down. Release the lever at the speed you want to maintain.
- Move the lever down (to SET-) and release it immediately.

  The cruising speed will decrease by 2 km/h (1 mph) each time you move the lever down (to SET-) in this manner.

To temporarily accelerate with the cruise control on:

If you want to speed up temporarily when the cruise control is on, depress the accelerator pedal. Increased speed will not interfere with cruise control operation or change the set speed.

To return to the set speed, take your foot off the accelerator pedal.

To cancel cruise control, do one of the following:

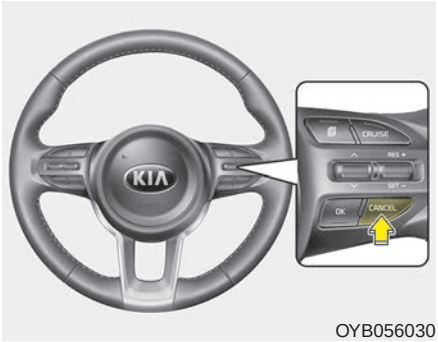

OYB056030

- Depress the brake pedal.
- Depress the clutch pedal with a Manual Transmission.
- Shift into N (Neutral) with an Automatic Transmission.
- Press the CANCEL button.
- Decrease the vehicle speed lower than the memory speed by 20 km/h (12 mph).
- Decrease the vehicle speed to less than approximately 30 km/h (20 mph).

Each of these actions will cancel cruise control operation (the SET indicator light in the instrument cluster will go off), but it will not turn the system off. If you wish to resume cruise control operation, move up the lever (to RES+) located on your steering wheel. You will return to your previously preset speed.

To resume cruising speed at more than approximately 30 km/h (20 mph):

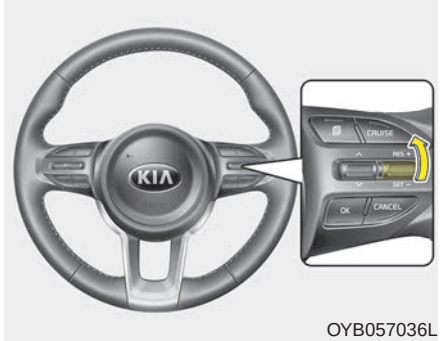

OYB057036L

If any method other than the CRUISE button was used to cancel cruising speed and the system is still activated, the most recent set speed will automatically resume when you move the lever up (to RES+).

It will not resume, however, if the vehicle speed has dropped below approximately 30 km/h (20 mph).

✻ NOTICE

Always check the road conditions before you move the lever up (to RES+) to resume the speed.

To turn cruise control off, do one of the following:

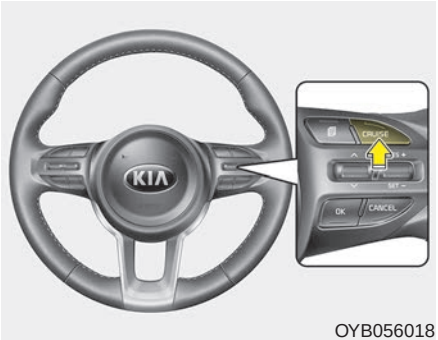

OYB056018

- Press the CRUISE button (the CRUISE indicator light in the instrument cluster will go off).
- Turn the ignition off.

Both of these actions cancel cruise control operation. If you want to resume cruise control operation, repeat the steps provided in “To set cruise control speed” on the previous page.

SPORT MODE INTEGRATED CONTROL SYSTEM

SPORT mode

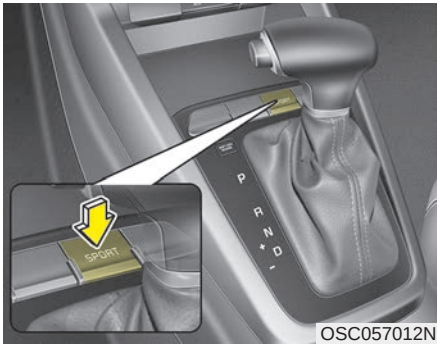

OSC057012N

The sport mode may be selected according to the driver's preference or road condition.

The mode changes whenever the SPORT MODE button is pressed.

NORMAL ⇄ SPORT

❊ When normal mode is selected, it is not displayed on the cluster.

SPORT mode

SPORT

SPORT mode focuses on dynamic driving by automatically adjusting the steering wheel, engine and transmission system.

- When the SPORT MODE button is pressed, the SPORT indicator (yellow or white) will illuminate.
- When the SPORT mode is activated, and the engine start/stop button is turned off and on it will change to NORMAL mode. To turn on the SPORT mode press SPORT MODE button again.
- If the system is activated:
  - While holding vehicle speed, it maintains the gear and RPM for some time even though the accelerator pedal is not depressed.
  - Up-shifting is delayed.

❊ NOTICE

In Sport drive mode, the fuel efficiency may decrease.

ECONOMICAL OPERATION

Your vehicle's fuel economy depends mainly on your style of driving, where you drive and when you drive.

Each of these factors affects how many miles (kilometers) you can get from a gallon (liter) of fuel. To operate your vehicle as economically as possible, use the following driving suggestions to help save money in both fuel and repairs:

- Drive smoothly. Accelerate at a moderate rate. Don't make "jack-rabbit" starts or full-throttle shifts and maintain a steady cruising speed. Don't race between stop-lights. Try to adjust your speed to the traffic so you don't have to change speeds unnecessarily. Avoid heavy traffic whenever possible. Always maintain a safe distance from other vehicles so you can avoid unnecessary braking. This also reduces brake wear.
- Drive at a moderate speed. The faster you drive, the more fuel your vehicle uses. Driving at a moderate speed, especially on the highway, is one of the most effective ways to reduce fuel consumption.
- Don't "ride" the brake pedal. This can increase fuel consumption and also increase wear on these components. In addition, driving with your foot resting on the brake pedal may cause the brakes to overheat, which reduces their effectiveness and may lead to more serious consequences.
- Take care of your tires. Keep them inflated to the recommended pressure. Incorrect inflation, either too much or too little, results in unnecessary tire wear. Check the tire pressures at least once a month.
- Be sure that the wheels are aligned correctly. Improper alignment can result from hitting curbs or driving too fast over irregular surfaces. Poor alignment causes faster tire wear and may also result in other problems as well as greater fuel consumption.
- Keep your vehicle in good condition. For better fuel economy and reduced maintenance costs, maintain your vehicle in accordance with the maintenance schedule in section 8. If you drive your vehicle in severe conditions, more frequent maintenance is required (see section 8 for details).
- Keep your vehicle clean. For maximum service, your vehicle should be kept clean and free of corrosive materials. It is especially important that mud, dirt, ice, etc. not be allowed to accumulate on the underside of the vehicle. This extra weight can result in increased fuel consumption and also contribute to corrosion.
- Travel lightly. Don't carry unnecessary weight in your vehicle. Weight reduces fuel economy.
- Don't let the engine idle longer than necessary. If you are waiting (and not in traffic), turn off your engine and restart only when you're ready to go.

- Remember, your vehicle does not require extended warm-up. After the engine has started, allow the engine to run for 10 to 20 seconds prior to placing the vehicle in gear. In very cold weather, however, give your engine a slightly longer warm-up period.
- Don't “lug” or “over-rev” the engine. Lugging is driving too slowly in a very high gear resulting in engine bucking. If this happens, shift to a lower gear. Over-revving is racing the engine beyond its safe limit. This can be avoided by shifting at the recommended speed.
- Use your air conditioning sparingly. The air conditioning system is operated by engine power so your fuel economy is reduced when you use it.
- Open windows at high speeds can reduce fuel economy.
- Fuel economy is reduced by cross-winds and headwinds. To help off-set some of this loss, slow down when driving in these conditions.

Keeping a vehicle in good operating condition is important both for economy and safety. Therefore, have an authorized Kia dealer perform scheduled inspections and maintenance.

⚠ WARNING - Engine off during motion

Never turn the engine off to coast down hills or anytime the vehicle is in motion. The power steering and power brakes will not function properly without the engine running. In addition, turning off the ignition while driving could engage the steering wheel lock resulting in loss of vehicle steering. Keep the engine on and downshift to an appropriate gear for engine braking effect.

SPECIAL DRIVING CONDITIONS

Hazardous driving conditions

When hazardous driving conditions are encountered such as water, snow, ice, mud, sand, or similar hazards, follow these suggestions:

- Drive cautiously and allow extra distance for braking.
- Avoid sudden braking or steering.
- When braking with non-ABS brakes pump the brake pedal with a light up-and-down motion until the vehicle is stopped.

Do not pump the brake pedal on a vehicle equipped with ABS.

- If stalled in snow, mud, or sand, use second gear. Accelerate slowly to avoid spinning the drive wheels.
- Use sand, rock salt, or other non-slip material under the drive wheels to provide traction when stalled in ice, snow, or mud.

⚠ WARNING - Downshifting

Do not downshift with an Automatic Transmission while driving on slippery surfaces. The sudden change in tire speed could cause the tires to skid and result in an accident.

Rocking the vehicle

If it is necessary to rock the vehicle to free it from snow, sand, or mud, first turn the steering wheel right and left to clear the area around your front wheels. Then, shift back and forth between 1st (First) and R (Reverse) in vehicles equipped with a Manual Transmission or R (Reverse) and any forward gear in vehicles equipped with an Automatic Transmission. Do not race the engine, and spin the wheels as little as possible. If you are still stuck after a few tries, have the vehicle pulled out by a tow vehicle to avoid engine overheating and possible damage to the transmission.

The ESC system should be turned OFF prior to rocking the vehicle.

⚠ CAUTION - Vehicle rocking

Prolonged rocking may cause engine overheating, transmission damage or failure, and tire damage.

⚠ **CAUTION - Spinning tires**

Do not spin the wheels, especially at speeds more than 56 km/h (35 mph). Spinning the wheels at high speeds when the vehicle is stationary could cause a tire to overheat which could result in tire damage.

⚠ **WARNING - Sudden vehicle movement**

Do not attempt to rock the vehicle if people or objects are nearby. The vehicle may suddenly move forward or backwards as it becomes unstuck.

Smooth cornering

Avoid braking or gear changing in corners, especially when roads are wet. Ideally, corners should always be taken under gentle acceleration. If you follow these suggestions, tire wear will be held to a minimum.

Driving at night

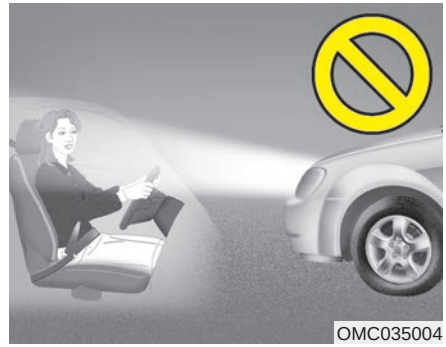

Because night driving presents more hazards than driving in the daylight, here are some important tips to remember:

- Slow down and keep more distance between you and other vehicles, as it may be more difficult to see at night, especially in areas where there may not be any street lights.

- Adjust your mirrors to reduce the glare from other driver's headlights.
- Keep your headlights clean and properly aimed on vehicles not equipped with the automatic headlight aiming feature. Dirty or improperly aimed headlights will make it much more difficult to see at night.
- Avoid staring directly at the headlights of oncoming vehicles. You could be temporarily blinded, and it will take several seconds for your eyes to readjust to the darkness.

Driving in the rain

Rain and wet roads can make driving dangerous, especially if you're not prepared for the slick pavement. Here are a few things to consider when driving in the rain:

- A heavy rainfall will make it harder to see and will increase the distance needed to stop your vehicle, so slow down.
- Keep your windshield wiping equipment in good shape. Replace your windshield wiper blades when they show signs of streaking or missing areas on the windshield.
- If your tires are not in good condition, making a quick stop on wet pavement can cause a skid and possibly lead to an accident. Be sure your tires are in good shape.
- Turn on your headlights to make it easier for others to see you.
- Driving too fast through large puddles can affect your brakes. If you must go through puddles, try to drive through them slowly.
- If you believe you may have gotten your brakes wet, apply them lightly while driving until normal braking operation returns.

Driving in flooded areas

Avoid driving through flooded areas unless you are sure the water is no higher than the bottom of the wheel hub. Drive through any water slowly. Allow adequate stopping distance because brake performance may be affected.

After driving through water, dry the brakes by gently applying them several times while the vehicle is moving slowly.

Driving off-road

Drive carefully off-road because your vehicle may be damaged by rocks or roots of trees. Become familiar with the off-road conditions where you are going to drive before you begin driving.

Highway driving

Tires

Adjust the tire inflation pressures to specification. Low tire inflation pressures will result in overheating and possible failure of the tires.

Avoid using worn or damaged tires which may result in reduced traction or tire failure.

Never exceed the maximum tire inflation pressure shown on the tires.

⚠ WARNING - Tire tread

Always check the tire tread before driving your vehicle. Worn-out tires can result in loss of vehicle control. Worn-out tires should be replaced as soon as possible. For further information and tread limits, refer to “Tires and wheels” in section 8.

⚠ WARNING - Under/Over Inflated Tires

Always check the tires for proper inflation before driving. Underinflated or overinflated tires can cause poor handling, loss of vehicle control, and sudden tire failure leading to accidents, injuries, and even death.

Fuel, engine coolant and engine oil

High speed travel consumes more fuel than urban motoring. Do not forget to check both the engine coolant and engine oil.

Drive belt

A loose or damaged drive belt may overheat the engine.

WINTER DRIVING

1JBB3305

Severe weather conditions in the winter result in greater wear and other problems. To minimize the problems of winter driving, you should follow these suggestions:

Snowy or Icy conditions

To drive your vehicle in deep snow, it may be necessary to use snow tires. If snow tires are needed, it is necessary to select tires equivalent in size and type of the original equipment tires. Failure to do so may adversely affect the safety and handling of your car. Furthermore, speeding, rapid acceleration, sudden brake applications, and sharp turns are potentially very hazardous practices.

During deceleration, use engine braking to the fullest extent. Sudden brake applications on snowy or icy roads may cause skids. You need to keep sufficient distance between the vehicle in operation in front and your vehicle. Also, apply the brake gently.

Snow tires

If you mount snow tires on your vehicle, make sure they are radial tires of the same size and load range as the original tires. Mount snow tires on all four wheels to balance your vehicle's handling in all weather conditions. Keep in mind that the traction provided by snow tires on dry roads may not be as high as your vehicle's original equipment tires. You should drive cautiously even when the roads are clear. Check with the tire dealer for maximum speed recommendations.

Do not install studded tires without first checking local, state and municipal regulations for possible restrictions against their use.

⚠ WARNING - Snow tire size

Snow tires should be equivalent in size and type to the vehicle's standard tires. Otherwise, the safety and handling of your vehicle may be adversely affected.

Use high quality ethylene glycol coolant

Your vehicle is delivered with high quality ethylene glycol coolant in the cooling system. It is the only type of coolant that should be used because it helps prevent corrosion in the cooling system, lubricates the water pump and prevents freezing. Be sure to replace or replenish your coolant in accordance with the maintenance schedule in section 8. Before winter, have your coolant tested to assure that its freezing point is sufficient for the temperatures anticipated during the winter.

Check battery and cables

Winter puts additional burdens on the battery system. Visually inspect the battery and cables as described in section 8. The level of charge in your battery can be checked by an authorized Kia dealer or a service station.

Change to "winter weight" oil if necessary

In some climates it is recommended that a lower viscosity "winter weight" oil be used during cold weather. See section 9 for recommendations. If you aren't sure what weight oil you should use, consult an authorized Kia dealer.

Check spark plugs and ignition system

Inspect your spark plugs as described in section 8 and replace them if necessary. Also check all ignition wiring and components to be sure they are not cracked, worn or damaged in any way.

To keep locks from freezing

To keep the locks from freezing, squirt an approved de-icer fluid or glycerine into the key opening. If a lock is covered with ice, squirt it with an approved de-icing fluid to remove the ice. If the lock is frozen internally, you may be able to thaw it out by using a heated key. Handle the heated key with care to avoid injury.

Use approved window washer anti-freeze in system

To keep the water in the window washer system from freezing, add an approved window washer anti-freeze solution in accordance with instructions on the container. Window washer anti-freeze is available from an authorized Kia dealer and most auto parts outlets. Do not use engine coolant or other types of anti-freeze as these may damage the paint finish.

Don't let your parking brake freeze

Under some conditions your parking brake can freeze in the engaged position. This is most likely to happen when there is an accumulation of snow or ice around or near the rear brakes or if the brakes are wet. If there is a risk the parking brake may freeze, apply it only temporarily while you put the shift lever in P (Automatic Transmission) or in first or reverse gear (Manual Transmission) and block the rear wheels so the vehicle cannot roll. Then release the parking brake.

Don't let ice and snow accumulate underneath

Under some conditions, snow and ice can build up under the fenders and interfere with the steering. When driving in severe winter conditions where this may happen, you should periodically check underneath the car to be sure the movement of the front wheels and the steering components is not obstructed.

Carry emergency equipment

Depending on the severity of the weather you should carry appropriate emergency equipment. Some of the items you may want to carry include tow straps or chains, emergency flares, sand, a shovel, jumper cables, a window scraper, gloves, ground cloth, coveralls, a blanket, etc.

TRAILER TOWING

We do not recommend using this vehicle for trailer towing.

VEHICLE LOAD LIMIT

Tire and loading information label

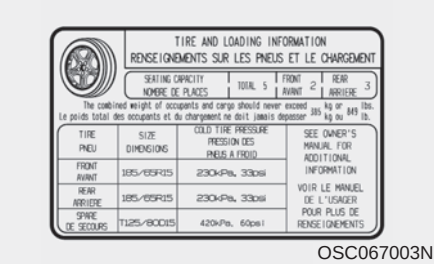

OSC067003N

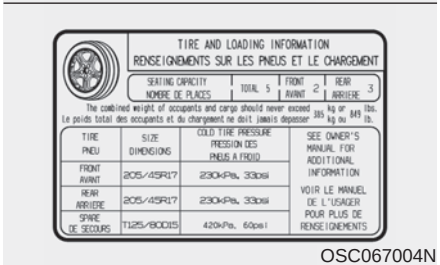

OSC067004N

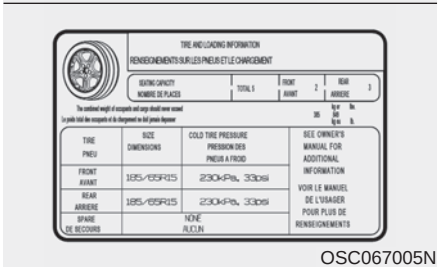

OSC067005N

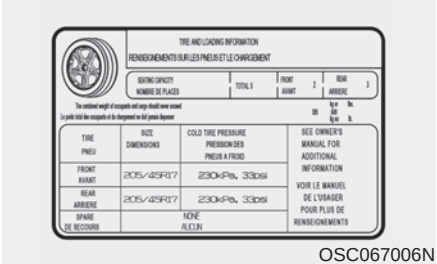

OSC067006N

The label located on the driver's door sill gives the original tire size, cold tire pressures recommended for your vehicle, the number of people that can be in your vehicle and vehicle capacity weight.

Vehicle capacity weight:

385 kg (849 lbs.)

Vehicle capacity weight is the maximum combined weight of occupants and cargo. If your vehicle is equipped with a trailer, the combined weight includes the tongue load.

Seating capacity:

Total : 5 persons
(Front seat : 2 persons,
Rear seat : 3 persons)

Seating capacity is the maximum number of occupants including a driver, your vehicle may carry.

However, the seating capacity may be reduced based upon the weight of all of the occupants, and the weight of the cargo being carried or towed.

Do not overload the vehicle as there is a limit to the total weight, or load limit including occupants and cargo, the vehicle can carry.

Towing capacity:

We do not recommend using this vehicle for trailer towing.

Cargo capacity:

The cargo capacity of your vehicle will increase or decrease depending on the weight and the number of occupants.

Steps For Determining Correct Load Limit -

1. Locate the statement "The combined weight of occupants and cargo should never exceed XXX kg or XXX lbs." on your vehicle's placard.
2. Determine the combined weight of the driver and passengers that will be riding in your vehicle.
3. Subtract the combined weight of the driver and passengers from XXX kg or XXX lbs.
4. The resulting figure equals the available amount of cargo and luggage load capacity. For example, if the “XXX” amount equals 635 kg (1400 lbs.) and there will be five 68 kg (150 lb) passengers in your vehicle, the amount of available cargo and luggage load capacity is 295 kg (650 lbs).

   (635-340 (5 x 68) = 295 kg or 1400-750 (5 x 150) = 650 lbs.)
5. Determine the combined weight of luggage and cargo being loaded on the vehicle. That weight may not safely exceed the available cargo and luggage load capacity calculated in Step 4.
6. If your vehicle will be towing a trailer, load from your trailer will be transferred to your vehicle. Consult this manual to determine how this reduces the available cargo and luggage load capacity of your vehicle.

Example 1

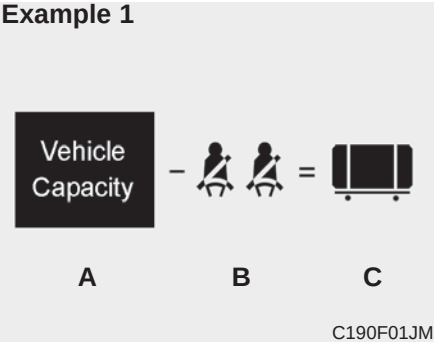

Item	Description	Total
A	Vehicle Capacity Weight	385 kg (849 lbs)
B	Subtract Occupant Weight 68 kg (150 lbs) × 2	136 kg (300 lbs)
C	Available Cargo and Luggage weight	249 kg (549 lbs)

Example 2

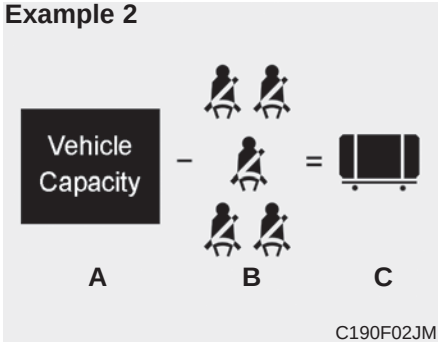

Item	Description	Total
A	Vehicle Capacity Weight	385 kg (849 lbs)
B	Subtract Occupant Weight 68 kg (150 lbs) × 5	340 kg (750 lbs)
C	Available Cargo and Luggage weight	45 kg (99 lbs)

Example 3

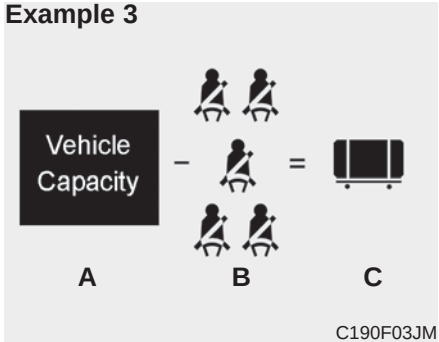

Item	Description	Total
A	Vehicle Capacity Weight	385 kg (849 lbs)
B	Subtract Occupant Weight 173 kg (61 lbs) × 5	365 kg (805 lbs)
C	Available Cargo and Luggage weight	20 kg (44 lbs)

Refer to your vehicle’s tire and loading information label for specific information about your vehicle's capacity weight and seating positions. The combined weight of the driver, passengers and cargo should never exceed your vehicle's capacity weight.

Certification label

The certification label is located on the driver's door sill at the center pillar.

This label shows the maximum allowable weight of the fully loaded vehicle. This is called the GVWR (Gross Vehicle Weight Rating). The GVWR includes the weight of the vehicle, all occupants, fuel and cargo.

This label also tells you the maximum weight that can be supported by the front and rear axles, called Gross Axle Weight Rating (GAWR).

To find out the actual loads on your front and rear axles, you need to go to a weigh station and weigh your vehicle. Your dealer can help you with this. Be sure to spread out your load equally on both sides of the centerline.

⚠ WARNING - Over loading

Never exceed the GVWR for your vehicle, the GAWR for either the front or rear axle and vehicle capacity weight. Exceeding these ratings can affect your vehicle's handling and braking ability.

The label will help you decide how much cargo and installed equipment your vehicle can carry.

If you carry items inside your vehicle - like suitcases, tools, packages, or anything else - they are moving as fast as the vehicle. If you have to stop or turn quickly, or if there is a crash, the items will keep going and can cause an injury if they strike the driver or a passenger.

⚠ WARNING - Over loading

Do not overload your vehicle. Overloading your vehicle can cause heat buildup in your vehicle's tires and possible tire failure, increased stopping distances and poor vehicle handling--all of which may result in a crash.

✻ NOTICE

Overloading your vehicle may cause damage. Repairs would not be covered by your warranty. Do not overload your vehicle.

⚠ WARNING - Loose cargo

Do not travel with unsecured blunt objects in the passenger compartment of your vehicle (e.g. suit cases or unsecured child seats). These items may strike occupant during a sudden stop or crash.

VEHICLE WEIGHT

This section will guide you in the proper loading of your vehicle and/or trailer, to keep your loaded vehicle weight within its design rating capability, with or without a trailer. Properly loading your vehicle will provide maximum return of the vehicle design performance. Before loading your vehicle, familiarize yourself with the following terms for determining your vehicle's weight ratings, with or without a trailer, from the vehicle's specifications and the compliance label:

Base curb weight

This is the weight of the vehicle including a full tank of fuel and all standard equipment. It does not include passengers, cargo, or optional equipment.

Vehicle curb weight

This is the weight of your new vehicle when you picked it up from your dealer plus any aftermarket equipment.

Cargo weight

This figure includes all weight added to the Base Curb Weight, including cargo and optional equipment.

GAW (Gross axle weight)

This is the total weight placed on each axle (front and rear) - including vehicle curb weight and all payload.

GAWR (Gross axle weight rating)

This is the maximum allowable weight that can be carried by a single axle (front or rear). These numbers are shown on the compliance label.

The total load on each axle must never exceed its GAWR.

GVW (Gross vehicle weight)

This is the Base Curb Weight plus actual Cargo Weight plus passengers.

GVWR (Gross vehicle weight rating)

This is the maximum allowable weight of the fully loaded vehicle (including all options, equipment, passengers and cargo). The GVWR is shown on the certification label located on the driver’s door sill.

What to do in an emergency

Road warning 7-2
- Hazard warning flasher 7-2

In case of an emergency while driving. 7-3
- If the engine stalls at a crossroad or crossing. 7-3
- If you have a flat tire while driving. 7-3
- If engine stalls while driving 7-3

If the engine will not start 7-4
- If the engine doesn't turn over or turns over slowly. . 7-4
- If engine turns over normally but does not start 7-4

Emergency starting 7-5
- Jump starting 7-5

If the engine overheats. 7-6

Tire Pressure Monitoring System (TPMS - Type A) 7-7
- Low tire pressure telltale 7-8
- TPMS (Tire Pressure Monitoring System) malfunction indicator 7-9
- Changing a tire with TPMS 7-10

Tire Pressure Monitoring System (TPMS - Type B) 7-12
- Check tire pressure 7-12
- Low tire pressure telltale 7-14
- Low tire pressure position telltale 7-14
- Changing a tire with TPMS 7-16

If you have a flat tire (with Tire Mobility Kit) . . 7-18
- Introduction 7-18
- Notes on the safe use of the Tire Mobility Kit 7-19
- Components of the Tire Mobility Kit 7-20
- Using the Tire Mobility Kit 7-21
- Distributing the sealant. 7-23
- Checking the tire inflation pressure 7-24
- Technical data 7-25

If you have a flat tire (with spare tire). 7-26
- Jack and tools 7-26
- Removing and storing the spare tire 7-27
- Changing tires 7-28
- Jack label 7-35

Towing 7-36
- Towing service 7-36
- Removable towing hook (Front) 7-37
- Emergency towing. 7-37

ROAD WARNING

Hazard warning flasher

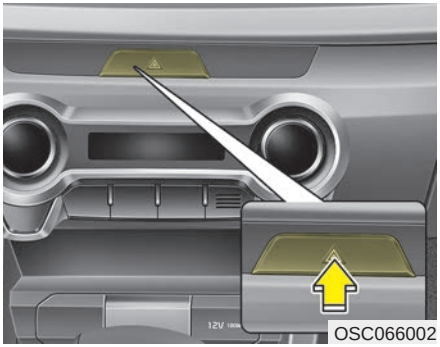

OSC066002

The hazard warning flasher serves as a warning to other drivers to exercise extreme caution when approaching, overtaking, or passing your vehicle.

It should be used whenever emergency repairs are being made or when the vehicle is stopped near the edge of a roadway.

Depress the flasher switch with the ignition switch in any position. The flasher switch is located in the center console switch panel. All turn signal lights will flash simultaneously.

- The hazard warning flasher operates whether your vehicle is running or not.
- The turn signals do not work when the hazard flasher is on.
- Care must be taken when using the hazard warning flasher while the vehicle is being towed.

IN CASE OF AN EMERGENCY WHILE DRIVING

In an emergency situation while the vehicle is in motion, you are able to turn the engine off and to the ACC position by pressing the ENGINE START/STOP button for more than 2 seconds or 3 times successively within 3 seconds. If the vehicle is still moving, you can restart the engine without depressing the brake pedal by pressing the ENGINE START/STOP button with the shift lever in the N (Neutral) position (if smart key equipped).

If the engine stalls at a cross-road or crossing

If the engine stalls at a crossroad or crossing, set the shift lever in the N (Neutral) position and then push the vehicle to a safe place.

If you have a flat tire while driving

If a tire goes flat while you are driving:

1. Take your foot off the accelerator pedal and let the vehicle slow down while driving straight ahead. Do not apply the brakes immediately or attempt to pull off the road as this may cause a loss of control. When the vehicle has slowed down to such a speed that it is safe to do so, brake carefully and pull off the road. Drive off the road as far as possible and park on a firm level ground. If you are on a divided highway, do not park in the median area between the two traffic lanes.
2. When the vehicle is stopped, turn on your emergency hazard flashers, set the parking brake and put the transmission in P (Automatic Transmission) or reverse (Manual Transmission).
3. Have all passengers get out of the vehicle. Be sure they all get out on the side of the vehicle that is away from traffic.
4. When changing a flat tire, follow the instruction provided later in this section.

If engine stalls while driving

1. Reduce your speed gradually, keeping a straight line. Move cautiously off the road to a safe place.
2. Turn on your emergency flashers.
3. Try to start the engine again. If your vehicle will not start, contact an authorized Kia dealer or seek other qualified assistance.

IF THE ENGINE WILL NOT START

If the engine doesn't turn over or turns over slowly

1. If your vehicle has an Automatic Transmission, be sure the shift lever is in N (Neutral) or P (Park) and the emergency brake is set.
2. Check the battery connections to be sure they are clean and tight.
3. Turn on the interior light. If the light dims or goes out when you operate the starter, the battery is discharged.
4. Check the starter connections to be sure they are securely tightened.
5. Do not push or pull the vehicle to start it. See instructions for “Jump starting”.

⚠ WARNING - Push/pull start

Do not push or pull the vehicle to start it. Push or pull starting may cause the catalytic converter to overload and create a fire hazard.

If engine turns over normally but does not start

1. Check fuel level.
2. With the ignition switch in the LOCK position, check all connectors at the ignition coil and spark plugs. Reconnect any that may be disconnected or loose.
3. Check the fuel line in the engine compartment.
4. If the engine still does not start, call an authorized Kia dealer or seek other qualified assistance.

EMERGENCY STARTING

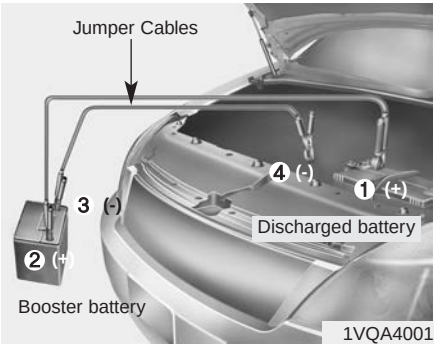

Connect cables in numerical order and disconnect in reverse order.

Jump starting

Jump starting can be dangerous if done incorrectly. Therefore, to avoid harm to yourself or damage to your vehicle or battery, follow these jump starting procedures. If in doubt, we strongly recommend that you have a competent technician or towing service jump start your vehicle.

⚠ CAUTION - 12 volt battery

Use only a 12-volt jumper system. You can damage a 12-volt starting motor, ignition system, and other electrical parts beyond repair by use of a 24-volt power supply (either two 12-volt batteries in series or a 24-volt motor generator set).

⚠ WARNING - Battery

Never attempt to check the electrolyte level of the battery as this may cause the battery to rupture or explode.

⚠ WARNING - Frozen batteries

Do not attempt to jump start the vehicle if the discharged battery is frozen or if the electrolyte level is low as the battery may rupture or explode.

⚠ WARNING - Battery

Keep all flames or sparks away from the battery. The battery produces hydrogen gas which will explode if exposed to flame or sparks.

⚠ WARNING - Sulfuric acid risk

When jump starting your vehicle be careful not to get acid on yourself, your clothing or on the vehicle. Automobile batteries contain sulfuric acid. This is poisonous and highly corrosive.

IF THE ENGINE OVERHEATS

If your temperature gauge indicates overheating, you will experience a loss of power, or hear loud pinging or knocking, the engine is probably too hot. If this happens, you should:

1. Pull off the road and stop as soon as it is safe to do so.
2. Place the shift lever in P (Automatic Transmission) or neutral (Manual Transmission) and set the parking brake. If the air conditioning is on, turn it off.
3. If engine coolant is running out under the vehicle or steam is coming out from underneath the hood, stop the engine. Do not open the hood until the coolant has stopped running or the steaming has stopped. If there is no visible loss of engine coolant and no steam, leave the engine running and check to be sure the engine cooling fan is operating. If the fan is not running, turn the engine off.
4. Check to see if the water pump drive belt is missing. If it is not missing, check to see that it is tight. If the drive belt seems to be satisfactory, check for coolant leaking from the radiator, hoses or under the vehicle. (If the air conditioning had been in use, it is normal for cold water to be draining from it when you stop).

⚠ WARNING - Under the hood

While the engine is running, keep hair, hands and clothing away from moving parts such as the fan and drive belts.

5. If the water pump drive belt is broken or engine coolant leaks, stop the engine immediately and call the nearest authorized Kia dealer for assistance.

⚠ WARNING - Radiator cap

Do not remove the radiator cap when the engine is hot. This can allow coolant to be blown out of the opening and cause serious burns.

6. If you cannot find the cause of the overheating, wait until the engine temperature has returned to normal. Then, if coolant has been lost, carefully add coolant to the reservoir to bring the fluid level in the reservoir up to the halfway mark.
7. Proceed with caution, keeping alert for further signs of overheating. If overheating happens again, call an authorized Kia dealer for assistance.

Serious loss of coolant indicates there is a leak in the cooling system and this should be checked as soon as possible by an authorized Kia dealer.

TIRE PRESSURE MONITORING SYSTEM (TPMS - TYPE A, IF EQUIPPED)

(1) Low tire pressure telltale / TPMS malfunction indicator

Each tire, including the spare (if provided), should be checked monthly when cold and inflated to the inflation pressure recommended by the vehicle manufacturer on the vehicle placard or tire inflation pressure label. (If your vehicle has tires of a different size than the size indicated on the vehicle placard or tire inflation pressure label, you should determine the proper tire inflation pressure for those tires.)

As an added safety feature, your vehicle has been equipped with a tire pressure monitoring system (TPMS) that illuminates a low tire pressure telltale when one or more of your tires is significantly under-inflated. Accordingly, when the low tire pressure telltale illuminates, you should stop and check your tires as soon as possible, and inflate them to the proper pressure. Driving on a significantly under-inflated tire causes the tire to overheat and can lead to tire failure. Under inflation also reduces fuel efficiency and tire tread life, and may affect the vehicle's handling and stopping ability.

Please note that the TPMS is not a substitute for proper tire maintenance, and it is the driver's responsibility to maintain correct tire pressure, even if under-inflation has not reached the level to trigger illumination of the TPMS low tire pressure telltale.

Your vehicle has also been equipped with a TPMS malfunction indicator to indicate when the system is not operating properly. The TPMS malfunction indicator is combined with the low tire pressure telltale. When the system detects a malfunction, the telltale will flash for approximately one minute and then remain continuously illuminated. This sequence will continue upon subsequent vehicle start-ups as long as the malfunction exists. When the malfunction indicator is illuminated, the system may not be able to detect or signal low tire pressure as intended. TPMS malfunctions may occur for a variety of reasons, including the installation of replacement or alternate tires or wheels on the vehicle that prevent the TPMS from functioning properly. Always check the TPMS malfunction telltale after replacing one or more tires or wheels on your vehicle to ensure that the replacement or alternate tires and wheels allow the TPMS to continue to function properly.

✻ NOTICE

If the TPMS indicator does not illuminate for 3 seconds when the ignition switch is turned to the ON position or engine is running, or if it comes on after blinking for approximately one minute, take your car to your nearest authorized Kia dealer and have the system checked.

Low tire pressure telltale

When the tire pressure monitoring system warning indicator is illuminated, one or more of your tires is significantly under-inflated.

If the telltale illuminates, immediately reduce your speed, avoid hard cornering and anticipate increased stopping distances. You should stop and check your tires as soon as possible. Inflate the tires to the proper pressure as indicated on the vehicle's placard or tire inflation pressure label located on the driver's side center pillar outer panel. If you cannot reach a service station or if the tire cannot hold the newly added air, replace the low pressure tire with the spare tire.

Then the Low Tire Pressure telltale may flash for approximately one minute and then remain continuously illuminated after restarting and about 20 minutes of continuous driving before you have the low pressure tire repaired and replaced on the vehicle.

In winter or cold weather, the low tire pressure telltale may be illuminated if the tire pressure was adjusted to the recommended tire inflation pressure in warm weather. It does not mean your TPMS is malfunctioning because the decreased temperature leads to a proportional lowering of tire pressure.

When you drive your vehicle from a warm area to a cold area or from a cold area to a warm area, or the outside temperature is greatly higher or lower, you should check the tire inflation pressure and adjust the tires to the recommended tire inflation pressure.

When filling tires with more air, conditions to turn off the low tire pressure telltale may not be met. This is because a tire inflator has a margin of error in performance. The low tire pressure telltale will be turned off if the tire pressure is above the recommended tire inflation pressure.

⚠ WARNING - Low pressure damage

Do not drive on low pressure tires. Significantly low tire pressure can cause the tires to overheat and fail making the vehicle unstable resulting in increased braking distances and a loss of vehicle control.

TPMS (Tire Pressure Monitoring System) malfunction indicator

The TPMS malfunction indicator will illuminate after it blinks for approximately one minute when there is a problem with the Tire Pressure Monitoring System. If the system is able to correctly detect an under inflation warning at the same time as system failure then it will illuminate the TPMS malfunction indicator.

Have the system checked by an authorized Kia dealer as soon as possible to determine the cause of the problem.

The TPMS malfunction indicator may be illuminated if the vehicle is moving around electric power supply cables or radio transmitters such as at police stations, government and public offices, broadcasting stations, military installations, airports, or transmitting towers, etc. This can interfere with normal operation of the Tire Pressure Monitoring System (TPMS).

The TPMS malfunction indicator may illuminate if snow chains or some separately purchased devices such as notebook computers, mobile charger, remote starter, navigation etc. are used in the vehicle. This can interfere with normal operation of the Tire Pressure Monitoring System (TPMS).

Changing a tire with TPMS

If you have a flat tire, the Low Tire Pressure will come on. Have the flat tire repaired by an authorized Kia dealer as soon as possible or replace the flat tire with the spare tire.

⚠ **CAUTION - Repair Agents**

Never use a puncture-repairing agent not approved by Kia to repair and/or inflate a low pressure tire. The tire sealant not approved by Kia may damage the tire pressure sensor.

Each wheel is equipped with a tire pressure sensor mounted inside the tire behind the valve stem. You must use TPMS specific wheels. It is recommended that you always have your tires serviced by an authorized Kia dealer.

Even if you replace the low pressure tire with the spare tire, the Low Tire Pressure telltale will blink or remain on until the low pressure tire is repaired and placed on the vehicle. After you replace the low pressure tire with the TPMS spare tire, the Low Tire Pressure telltale may blink or illuminate after a few minutes because the TPMS sensor mounted on the spare wheel is not initiated.

Once the low pressure tire is reinflated to the recommended pressure and installed on the vehicle or the TPMS sensor mounted on the replaced spare wheel is initiated by an authorized Kia dealer, the TPMS malfunction indicator and the low tire pressure telltale will extinguish within a few minutes of driving.

If the indicator is not extinguished after a few minutes of driving, please visit an authorized Kia dealer.

If an original mounted tire is replaced with the spare tire, the TPMS sensor on the replaced spare wheel should be initiated and the TPMS sensor on the original mounted wheel should be deactivated. If the TPMS sensor on the original mounted wheel located in the spare tire carrier still activates, the tire pressure monitoring system may not operate properly. Have the tire with TPMS serviced or replaced by an authorized Kia dealer.

You may not be able to identify a low tire by simply looking at it. Always use a good quality tire pressure gauge to measure the tire's inflation pressure. Please note that a tire that is hot (from being driven) will have a higher pressure measurement than a tire that is cold.

A cold tire means the vehicle has been sitting for 3 hours and driven for less than 1.6 km (1 mile) in that 3 hour period.

Allow the tire to cool before measuring the inflation pressure. Always be sure the tire is cold before inflating to the recommended pressure.

The TPMS cannot alert you to severe and sudden tire damage caused by external factors such as nails or road debris.

If you feel any vehicle instability, immediately take your foot off the accelerator, apply the brakes gradually and with light force, and slowly move to a safe position off the road.

✻ NOTICE

Tampering with, modifying, or disabling the Tire Pressure Monitoring System (TPMS) components may interfere with the system's ability to warn the driver of low tire pressure conditions and/or TPMS malfunctions. Tampering with, modifying, or disabling the Tire Pressure Monitoring System (TPMS) components may void the warranty for that portion of the vehicle.

This device complies with Industry Canada licence-exempt RSS standard(s).

Operation is subject to the following two conditions:

(1) This device may not cause interference, and

(2) This device must accept any interference, including interference that may cause undesired operation of the device.

TIRE PRESSURE MONITORING SYSTEM (TPMS - TYPE B, IF EQUIPPED)

(1) Low tire pressure telltale / TPMS malfunction indicator

(2) Low tire pressure position telltale (Shown on the LCD display)

Check tire pressure

- You can check the tire pressure in the information mode on the cluster.
  - Refer to “User settings mode” in chapter 4.
- If tire pressure is not displayed when the vehicle is stopped, “Drive to display” message displays. After driving, check the tire pressure.
- You can change the tire pressure unit in the user settings mode on the cluster.
  - psi, kpa, bar (Refer to “User settings mode” in chapter 4).

✻ NOTICE

- **The tire pressure may change due to factors such as parking condition, driving style, and altitude above sea level.**
- **Low tire pressure warning may sound when a tire’s pressure unit is equal or higher than nearby tires. This is a normal occurrence, which is due to the change in tire pressure along with tire temperature.**

Each tire, including the spare (if provided), should be checked monthly when cold and inflated to the inflation pressure recommended by the vehicle manufacturer on the vehicle placard or tire inflation pressure label. (If your vehicle has tires of a different size than the size indicated on the vehicle placard or tire inflation pressure label, you should determine the proper tire inflation pressure for those tires.)

As an added safety feature, your vehicle has been equipped with a tire pressure monitoring system (TPMS) that illuminates a low tire pressure telltale when one or more of your tires is significantly under-inflated. Accordingly, when the low tire pressure telltale illuminates, you should stop and check your tires as soon as possible, and inflate them to the proper pressure. Driving on a significantly under-inflated tire causes the tire to overheat and can lead to tire failure. Under inflation also reduces fuel efficiency and tire tread life, and may affect the vehicle's handling and stopping ability.

Please note that the TPMS is not a substitute for proper tire maintenance, and it is the driver's responsibility to maintain correct tire pressure, even if under-inflation has not reached the level to trigger illumination of the TPMS low tire pressure telltale.

Your vehicle has also been equipped with a TPMS malfunction indicator to indicate when the system is not operating properly. The TPMS malfunction indicator is combined with the low tire pressure telltale. When the system detects a malfunction, the telltale will flash for approximately one minute and then remain continuously illuminated. This sequence will continue upon subsequent vehicle start-ups as long as the malfunction exists. When the malfunction indicator is illuminated, the system may not be able to detect or signal low tire pressure as intended. TPMS malfunctions may occur for a variety of reasons, including the installation of replacement or alternate tires or wheels on the vehicle that prevent the TPMS from functioning properly.

Always check the TPMS malfunction telltale after replacing one or more tires or wheels on your vehicle to ensure that the replacement or alternate tires and wheels allow the TPMS to continue to function properly.

✻ NOTICE

If the TPMS, Low Tire Pressure indicator does not illuminate for 3 seconds when the ignition switch is turned to the ON position or engine is running, or if they remain illuminated after coming on for approximately 3 seconds, take your vehicle to your nearest authorized Kia dealer and have the system checked.

Low tire pressure telltale

Low tire pressure position telltale

OSC047139N

When the tire pressure monitoring system warning indicators are illuminated, one or more of your tires is significantly under-inflated.

If the telltale illuminates, immediately reduce your speed, avoid hard cornering and anticipate increased stopping distances. You should stop and check your tires as soon as possible.

Inflate the tires to the proper pressure as indicated on the vehicle's placard or tire inflation pressure label located on the driver's side center pillar outer panel. If you cannot reach a service station or if the tire cannot hold the newly added air, replace the low pressure tire with the spare tire.

Then the TPMS malfunction indicator and the Low Tire Pressure telltale may turn on and illuminate after restarting and about 20 minutes of continuous driving before you have the low pressure tire repaired and replaced on the vehicle.

In winter or cold weather, the low tire pressure telltale may be illuminated if the tire pressure was adjusted to the recommended tire inflation pressure in warm weather. It does not mean your TPMS is malfunctioning because the decreased temperature leads to a proportional lowering of tire pressure.

When you drive your vehicle from a warm area to a cold area or from a cold area to a warm area, or the outside temperature is greatly higher or lower, you should check the tire inflation pressure and adjust the tires to the recommended tire inflation pressure.

⚠ WARNING - Low pressure damage

Do not drive on low pressure tires. Significantly low tire pressure can cause the tires to overheat and fail making the vehicle unstable resulting in increased braking distances and a loss of vehicle control.

⚠ CAUTION

When filling tires with more air, conditions to turn off the low tire pressure telltale may not be met. This is because a tire inflator has a margin of error in performance. The low tire pressure telltale will be turned off if the tire pressure is above the recommended tire inflation pressure.

TPMS (Tire Pressure Monitoring System) malfunction indicator

The low tire pressure telltale will illuminate after it blinks for approximately one minute when there is a problem with the Tire Pressure Monitoring System. If the system is able to correctly detect an underinflation warning at the same time as system failure then it will illuminate both the TPMS malfunction and low tire pressure position telltales e.g. if Front Left sensor fails, the TPMS malfunction indicator illuminates, but if the Front Right, Rear Left, or Rear Right tire is under-inflated, the low tire pressure position telltales may illuminate together with the TPMS malfunction indicator.

Have the system checked by an authorized Kia dealer as soon as possible to determine the cause of the problem.

- The TPMS malfunction indicator may be illuminated if the vehicle is moving around electric power supply cables or radios transmitters such as at police stations, government and public offices, broadcasting stations, military installations, airports, or transmitting towers, etc. This can interfere with normal operation of the Tire Pressure Monitoring System (TPMS).
- The TPMS malfunction indicator may be illuminated if snow chains are used or some separate electronic devices such as notebook computer, mobile charger, remote starter or navigation etc., are used in the vehicle. This can interfere with normal operation of the Tire Pressure Monitoring System (TPMS).

Changing a tire with TPMS

If you have a flat tire, the Low Tire Pressure telltale will come on. Have the flat tire repaired by an authorized Kia dealer as soon as possible or replace the flat tire with the spare tire.

⚠ **CAUTION - Repair Agents**

Never use a puncture-repairing agent not approved by Kia to repair and/or inflate a low pressure tire. The sealant not approved by Kia may damage the tire pressure sensor.

Each wheel is equipped with a tire pressure sensor mounted inside the tire behind the valve stem. You must use TPMS specific wheels. It is recommended that you always have your tires serviced by an authorized Kia dealer.

Even if you replace the low pressure tire with the spare tire, the Low Tire Pressure telltale will remain on until the low pressure tire is repaired and placed on the vehicle.

After you replace the low pressure tire with the spare tire, the TPMS malfunction indicator may illuminate after a few minutes because the TPMS sensor mounted on the spare wheel is not initiated.

Once the low pressure tire is inflated again to the recommended pressure and installed on the vehicle or the TPMS sensor mounted on the replaced spare wheel is initiated by an authorized Kia dealer, the TPMS malfunction indicator and the low tire pressure telltale will turn off within a few minutes of driving.

If the indicator has not disappeared after a few minutes of driving, please visit an authorized Kia dealer.

If an original mounted tire is replaced with the spare tire, the TPMS sensor on the replaced spare wheel should be initiated and the TPMS sensor on the original mounted wheel should be deactivated. If the TPMS sensor on the original mounted wheel located in the spare tire carrier still activates, the tire pressure monitoring system may not operate properly. Have the tire with TPMS serviced or replaced by an authorized Kia dealer.

You may not be able to identify a low tire by simply looking at it. Always use a good quality tire pressure gauge to measure the tire's inflation pressure. Please note that a tire that is hot (from being driven) will have a higher pressure measurement than a tire that is cold (from sitting stationary for at least 3 hours and driven less than 1.6 km (1 mile) during that 3 hour period).

Allow the tire to cool before measuring the inflation pressure. Always be sure the tire is cold before inflating to the recommended pressure.

A cold tire means the vehicle has been sitting for 3 hours and driven for less than 1.6 km (1 mile) in that 3 hour period.

Never use tire sealant if your vehicle is equipped with a Tire Pressure Monitoring System. The liquid sealant can damage the tire pressure sensors.

- The TPMS cannot alert you to severe and sudden tire damage caused by external factors such as nails or road debris.
- If you feel any vehicle instability, immediately take your foot off the accelerator, apply the brakes gradually and with light force, and slowly move to a safe position off the road.

✻ NOTICE - Protecting TPMS

Tampering with, modifying, or disabling the Tire Pressure Monitoring System (TPMS) components may interfere with the system's ability to warn the driver of low tire pressure conditions and/or TPMS malfunctions. Tampering with, modifying, or disabling the Tire Pressure Monitoring System (TPMS) components may void the warranty for that portion of the vehicle.

This device complies with Industry Canada licence-exempt RSS standard(s).

Operation is subject to the following two conditions:

(1) This device may not cause interference, and

(2) This device must accept any interference, including interference that may cause undesired operation of the device.

IF YOU HAVE A FLAT TIRE (WITH TIRE MOBILITY KIT, IF EQUIPPED)

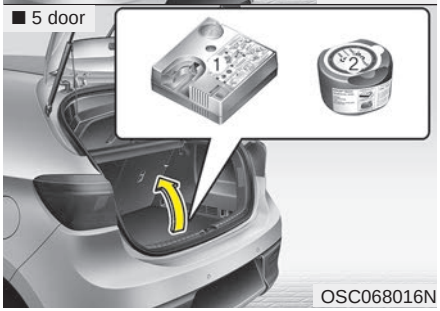

For safe operation, carefully read and follow the instructions in this manual before use.

(1) Compressor

(2) Sealant bottle

The Tire Mobility Kit is a temporary fix to the tire and the tire should be inspected by an authorized Kia dealer as soon as possible.

⚠ WARNING - Tire wall

Do not use the Tire Mobility Kit to repair punctures in the tire walls. This can result in an accident due to tire failure.

✻ NOTICE

The Tire Mobility Kit sealing compound in the bottle is to be used for one tire only. See your Kia dealership for additional replacement sealant bottles.

Have your tire repaired as soon as possible. The tire may loose air pressure at any time after inflating with the Tire Mobility Kit.

Introduction

With the Tire Mobility Kit you stay mobile even after experiencing a tire puncture.

The system of compressor and sealing compound effectively and comfortably seals most punctures in a passenger car tire caused by nails or similar objects and reinflates the tire.

After you ensured that the tire is properly sealed you can drive cautiously on the tire (up to 200 km (120 miles)) at a max. speed of 80 km/h (50 mph) in order to reach a service station or tire dealer to have the tire repaired or replaced.

It is possible that some tires, especially with larger punctures or damage to the sidewall, cannot be sealed completely.

Air pressure loss in the tire may adversely affect tire performance.

For this reason, you should avoid abrupt steering or other driving maneuvers, especially if the vehicle is heavily loaded or if a trailer is in use.

The Tire Mobility Kit is not designed or intended as a permanent tire repair method and is to be used for one tire only.

This instruction shows you step by step procedure to temporarily seal the puncture.

Read the section "Notes on the safe use of the Tire Mobility Kit".

Notes on the safe use of the Tire Mobility Kit

- Park your car at the side of the road so that you can work with the Tire Mobility Kit away from moving traffic.
- To be sure your vehicle will not move, even when you're on fairly level ground, always set your parking brake.
- Only use the Tire Mobility Kit for sealing/inflation passenger car tires. Only punctured areas located within the tread region of the tire can be sealed using the tire mobility kit.
- Do not use on motorcycles, bicycles or any other type of tires.
- When the tire and wheel are damaged, do not use Tire Mobility Kit for your safety.
- Use of the Tire Mobility Kit may not be effective for tire damage larger than approximately 6 mm (0.24 in).

  Please contact the nearest Kia dealership if the tire cannot be made roadworthy with the Tire Mobility Kit.
- Do not use the Tire Mobility Kit if a tire is severely damaged by driving run flat or with insufficient air pressure.
- Do not remove any foreign objects such as nails or screws that have penetrated the tire.
- Provided the car is outdoors, leave the engine running. Otherwise operating the compressor may eventually drain the car battery.
- Never leave the Tire Mobility Kit unattended while it is being used.
- Do not leave the compressor running for more than 10 min. at a time or it may overheat.
- Do not use the Tire Mobility Kit if the ambient temperature is below -30°C (22°F).

Components of the Tire Mobility Kit

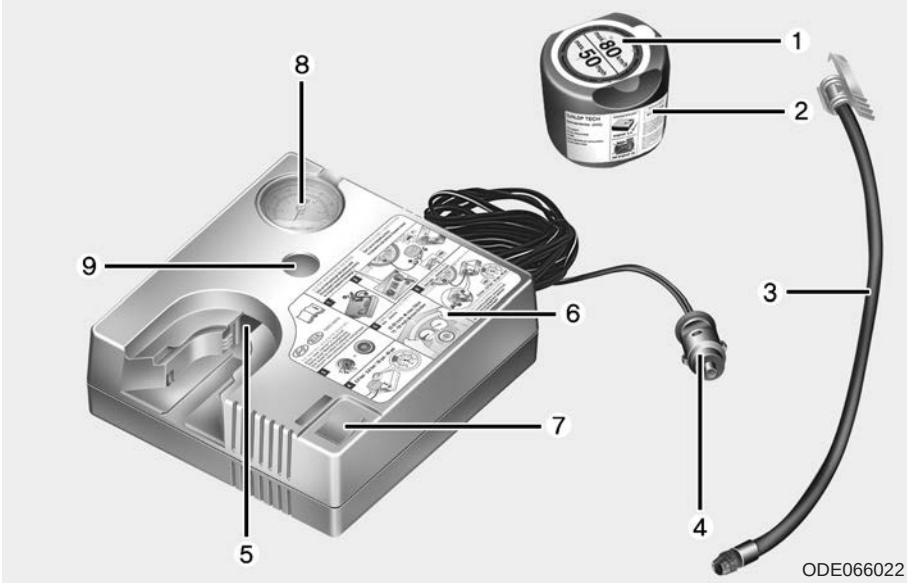

1. Speed restriction label
2. Sealant bottle and label with speed restriction
3. Filling hose from sealant bottle to wheel
4. Connectors and cable for the power outlet direct connection
5. Holder for the sealant bottle
6. Compressor
7. On/off switch
8. Pressure gauge for displaying the tire inflation pressure
9. Button for reducing tire inflation pressure

Connectors, cable and connection hose are stored in the compressor housing.

⚠ WARNING - Expired sealant

Do not use the Tire sealant after expiration date noted on the sealant bottle. This can increase the risk of tire failure.

⚠ WARNING - Sealant

- **Keep out of reach of children.**
- **Avoid contact with eyes.**
- **Do not swallow.**

Strictly follow the specified sequence, otherwise the sealant may escape under high pressure.

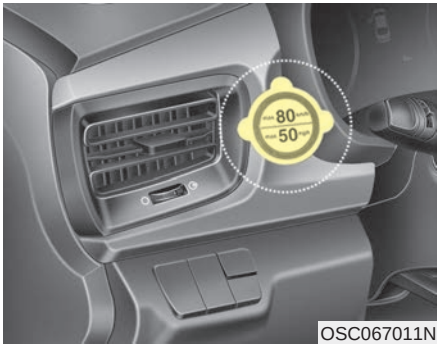

OSC067011N

✻ NOTICE

Before using the tire repair kit, please read carefully the instruction attached on the sealant case. Detach the speed limit label on the sealant case and put it on a highly visible place. Always drive within the speed limit.

Using the Tire Mobility Kit

OTAM061022

Carefully follow below steps.

1. Shake the sealant case.

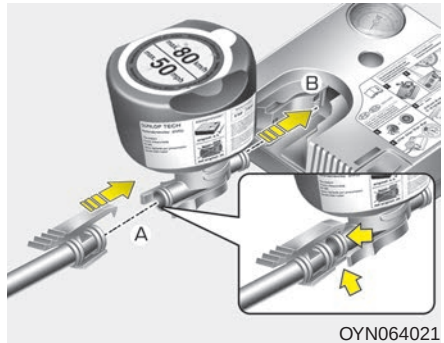

OYN064021

2. Connect the filling hose (3) onto the connector of the sealant bottle (A).
3. Insert the sealant bottle into the housing of the compressor(B) so that the bottle is upright.
4. Ensure that button (9) on the compressor is not pressed.

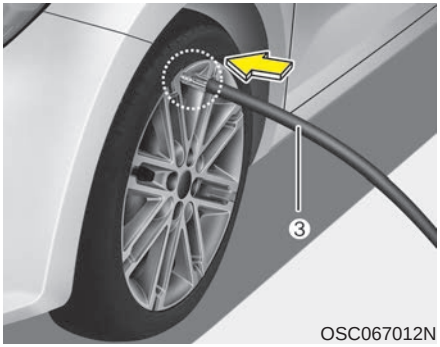

OSC067012N

5. Unscrew the valve cap from the valve of the defective wheel and screw filling hose (3) of the sealant bottle onto the valve.

OSC067013N

✻ NOTICE

If the sealant is injected when the tire air pressure injection valve and sealant injection hose are not fully interlocked, the sealant may overflow and clog the valve.

✻ NOTICE

If a visable foreign object has punctured the tire, do not remove it before using Tire Mobility Kit.

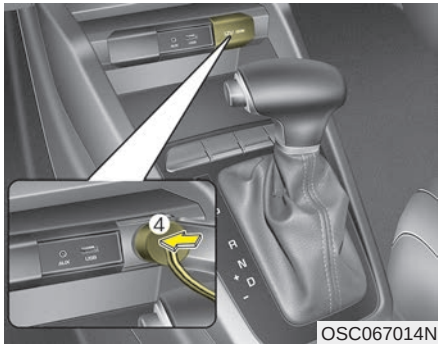

OSC067014N

6. Ensure that the compressor is switched off, position 0.
7. Connect between compressor and the vehicle power outlet (4) using the cable and connectors.

8. With the engine start/stop button position on or ignition switch position on, switch on the compressor and let it run for approximately 5~7 minutes to fill the sealant up to proper pressure. (refer to the Tire and Wheels, chapter 9). The inflation pressure of the tire after filling is unimportant and will be checked/corrected later. Be careful not to overinflate the tire and stay away from the tire when filling it.

⚠ WARNING - Tire pressure

Do not attempt to drive your vehicle if the tire pressure is below 200 kPa (29 psi). This could result in an accident due to sudden tire failure.

9. Switch off the compressor.
10. Detach the hoses from the sealant bottle connector and from the tire valve.

Return the Tire Mobility Kit to its storage location in the vehicle.

⚠ WARNING - Carbon monoxide

Carbon monoxide poisoning and suffocation is possible if the engine is left running in a poorly ventilated or unventilated location (such as inside a building).

Distributing the sealant

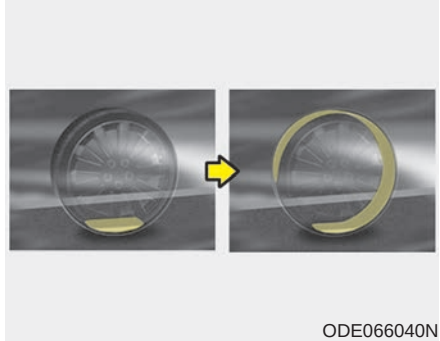

ODE066040N

11. Immediately drive approximately 7~10 km or, about 10 min (4~6 miles) to evenly distribute the sealant in the tire.

Do not exceed a speed of 80 km/h (50 mph). If possible, do not fall below a speed of 20 km/h (12 mph).

While driving, if you experience any unusual vibration, ride disturbance or noise, reduce your speed and drive with caution until you can safely pull off of the side of the road.

Call for road side service or towing. When you use the Tire Mobility Kit, the tire pressure sensors and wheel may be stained by sealant. Therefore, remove the tire pressure sensors and wheel stained by sealant and have your vehicle inspected by an authorized Kia dealer.

Checking the tire inflation pressure

1. After driving approximately 7 ~ 10 km or about 10 min (4 ~ 6 miles), stop at a safe location.
2. Connect the filling hose (3) of the compressor (clip mounted side) directly and then connect the fill ing hose (3) (opposite side) to the tire valve.
3. Connect between compressor and the vehicle power outlet using the cable and connectors.
4. Adjust the tire inflation pressure to the recomended tire inflation. With the ignition switch on, proceed as follows.
   - **To increase the inflation pressure :** Switch on the compressor, position I. To check the current inflation pressure setting, briefly switch off the compressor.

✻ NOTICE

The pressure gauge may show higher than actual reading when the compressor is running. To get an accurate tire reading, the compressor needs to be turned off.

- **To reduce the inflation pressure:** Press the button (9) on the compressor.

⚠ **CAUTION - Tire pressure sensor**

When you use the Tire Mobility Kit including sealant not approved by Kia, the tire pressure sensors may be damaged by sealant. The sealant on the tire pressure sensor and wheel should be removed when you replace the tire with a new one and inspect the tire pressure sensors at an authorized dealer.

Technical Data

System voltage: DC 12 V
Working voltage: DC 10 - 15 V
Amperage rating: max. 10A ± 1A
(at DC 12V operation)
Suitable for use at temperatures:
-30 ~ +70°C (-22 ~ +158°F)
Max. working pressure:
6 bar (87 psi)
Size
Compressor: 161 X 150 X 55.8 mm
(6.3 X 5.9 X 2.2 in.)
Sealant bottle: 81 x 85 ø mm
(3.2 x 3.3 ø in.)
Compressor weight:
735 g ± 25 g (1.62 lbs ± 0.06 lbs)
Sealant volume:
200 ml (12.2 cu. in.)

❊ Sealant and spare parts can be obtained and replaced at an authorized vehicle or tire dealer. Empty sealant bottles may be disposed of at home. Liquid residue from the sealant should be disposed of by your vehicle or tire dealer or in accordance with local waste disposal regulations.

IF YOU HAVE A FLAT TIRE (WITH SPARE TIRE, IF EQUIPPED)

Jack and tools

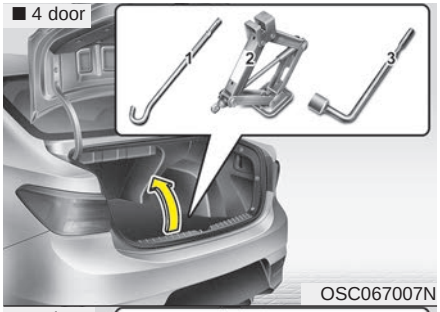

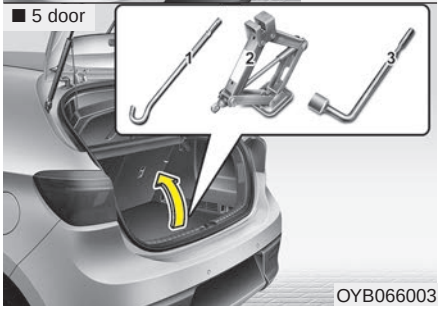

The spare tire, jack, jack handle and wheel lug nut wrench are stored in the luggage compartment.

Remove the luggage under tray out of the way to reach the equipment.

(1) Jack handle

(2) Jack

(3) Wheel lug nut wrench

Jacking instructions

The jack is provided for emergency tire changing only.

To prevent the jack from “rattling” while the vehicle is in motion, store it properly.

Follow jacking instructions to reduce the possibility of personal injury.

⚠ WARNING - Changing tires

Never attempt vehicle repairs in the traffic lanes of a public road or highway.

Always move the vehicle completely off the road and onto the shoulder before trying to change a tire. The jack should be used on firm level ground. If you cannot find a firm level place off the road, call a towing service company for assistance.

Be sure to use the correct front and rear jacking positions on the vehicle; never use the bumpers or any other part of the vehicle for jack support.

⚠ WARNING - Tire Jack

Do not place any portion of your body under a vehicle that is only supported by a jack since the vehicle can easily roll off the jack. Use vehicle support stands.

Do not allow anyone to remain in the vehicle while it is on the jack.

Make sure any children present are in a secure place away from the road and from the vehicle to be raised with the jack.

⚠ WARNING -Running vehicle on jack

Do not start or run the engine of the vehicle while the vehicle is on the jack as this may cause the vehicle to fall off the jack.

Removing and storing the spare tire

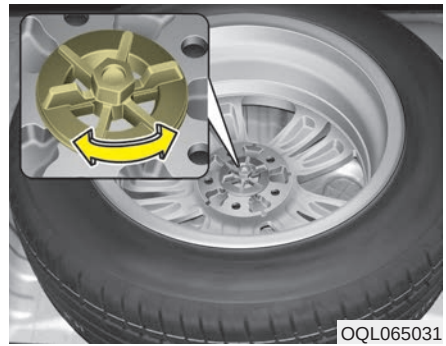

Turn the tire hold-down wing bolt counterclockwise to remove the spare tire.

Store the tire in the reverse order of removal.

To prevent the spare tire and tools from “rattling” while the vehicle is in motion, store them properly.

OQL065032

If it is hard to loosen the tire hold-down wing bolt by hand, you can loosen it easily using the jack handle.

1. Put the jack handle (1) inside of the tire hold-down wing bolt.
2. Turn the tire hold-down wing bolt counterclockwise with the jack handle.

Changing tires

OED066033

1. Park on a level surface and apply the parking brake firmly.
2. Shift the shift lever into R (Reverse) for Manual Transmission or P (Park) for Automatic Transmission.
3. Activate the hazard warning flashers.

1JBA6504

4. Remove the wheel lug nut wrench, jack, jack handle, and spare tire from the vehicle.
5. Block both the front and rear of the wheel that is diagonally opposite the jack position.

⚠ WARNING - Changing a tire

- **To prevent vehicle movement while changing a tire, always set the parking brake fully, and always block the wheel diagonally opposite the wheel being changed.**
- **We recommend that the wheels of the vehicle be blocked, and that no person remain in a vehicle that is being jacked.**

6. Loosen the wheel lug nuts counterclockwise one turn each, but do not remove any nut until the tire has been raised off the ground.

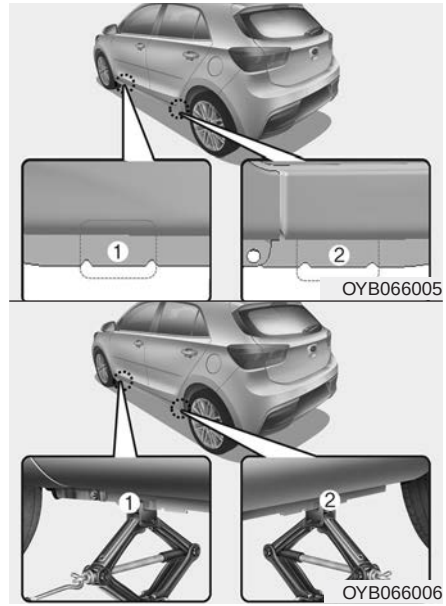

7. Place the jack at the front (1) or rear (2) jacking position closest to the tire you are changing. Place the jack at the designated locations under the frame. The jacking positions are plates welded to the frame with two tabs and a raised dot to index with the jack.

⚠ WARNING - Jack location

To reduce the possibility of injury, be sure to use only the jack provided with the vehicle in the correct jack position; never use any other part of the vehicle for jack support.

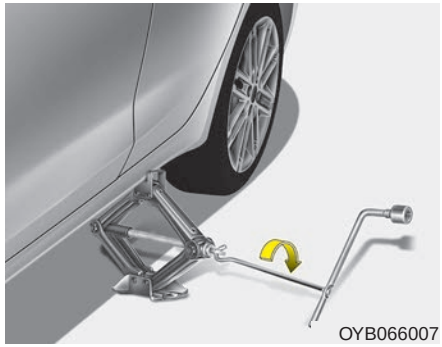

8. Insert the jack handle into the jack and turn it clockwise, raising the vehicle until the tire just clears the ground. This measurement is approximately 30 mm (1 in). Before removing the wheel lug nuts, make sure the vehicle is stable and that there is no chance for movement or slippage.
9. Loosen the wheel nuts and remove them with your fingers. Slide the wheel off the studs and lay it flat so it cannot roll away. To put the wheel on the hub, pick up the spare tire, line up the holes with the studs and slide the wheel onto them. If this is difficult, tip the wheel slightly and get the top hole in the wheel lined up with the top stud. Then jiggle the wheel back and forth until the wheel can be slid over the other studs.

Wheels and wheel covers may have sharp edges. Handle them carefully to avoid possible injury. Before putting the wheel into place, be sure that there is nothing on the hub or wheel (such as mud, tar, gravel, etc.) that prevents the wheel from fitting solidly against the hub.

⚠ WARNING - Installing a wheel

Make sure the wheel makes good contact with the hub when installed. If the contact of the mounting surface between the wheel and hub is not good, the wheel nuts could come loose and cause the loss of a wheel. Loss of a wheel may result in loss of control of the vehicle.

10. To install the wheel, hold it on the studs, put the wheel nuts on the studs and tighten them finger tight. Jiggle the tire to be sure it is completely seated, then tighten the nuts as much as possible with your fingers again.
11. Lower the vehicle to the ground by turning the wheel nut wrench counterclockwise.

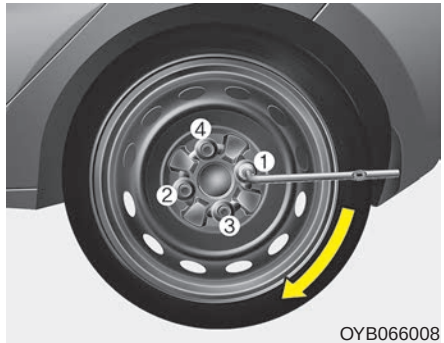

OYB066008

Then position the wrench as shown in the drawing and tighten the wheel nuts. Be sure the socket is seated completely over the nut. Do not stand on the wrench handle or use an extension pipe over the wrench handle.

Go around the wheel tightening every nut following the numerical sequence shown in the image until they are tight. Then double-check each nut for tightness. After changing the wheels, have an authorized Kia dealer tighten the wheel nuts to their proper torque as soon as possible.

Wheel nut tightening torque:

Steel wheel & aluminium alloy wheel:

11 ~ 13 kgf·m (79 ~ 94 lbf·ft)

If you have a tire gauge, remove the valve cap and check the air pressure. If the pressure is lower than recommended, drive slowly to the nearest service station and inflate to the correct pressure. If it is too high, adjust it until it is correct. Always reinstall the valve cap after checking or adjusting the tire pressure. If the cap is not replaced, air may leak from the tire. If you lose a valve cap, buy another and install it as soon as possible.

After you have changed wheels, always secure the flat tire in its place and return the jack and tools to their proper storage locations.

⚠ CAUTION

When replacing the tires, after driving for about 50 km (30 miles), tighten the wheel nuts to check that there is no looseness.

Recheck and tighten the wheel nuts again after driving for about 1,000 km (620 miles).

⚠ CAUTION - Replacing lug nuts

Make certain during wheel removal that the same nuts that were removed are reinstalled - or, if replaced, that nuts with metric threads and the same chamfer configuration are used. Your vehicle has metric threads on the wheel studs and nuts. Installation of a non-metric thread nut on a metric stud will not secure the wheel to the hub properly and will damage the stud so that it must be replaced.

Note that most lug nuts do not have metric threads. Be sure to use extreme care in checking for thread style before installing aftermarket lug nuts or wheels. If in doubt, consult an authorized Kia dealer.

⚠ WARNING - Wheel studs

Do not drive your vehicle with damaged wheel studs. If the studs are damaged, they may lose their ability to retain the wheel. This could lead to the loss of the wheel and a collision.

To prevent the jack, jack handle, wheel lug nut wrench and spare tire from rattling while the vehicle is in motion, store them properly.

Check the inflation pressures as soon as possible after installing the spare tire. Adjust it to the specified pressure, if necessary. Refer to “Tires and wheels” in section 8.

Important - use of compact spare tire (if equipped)

Your vehicle is equipped with a compact spare tire. This compact spare tire takes up less space than a regular-size tire. This tire is smaller than a conventional tire and is designed for temporary use only.

You should drive carefully when the compact spare is in use. The compact spare should be replaced by the proper conventional tire and rim at the first opportunity.

The operation of this vehicle is not recommended with more than one compact spare tire in use at the same time.

⚠ WARNING - Spare tire

Do not operate your vehicle on this compact spare at speeds over 80 km/h (50 mph). The compact spare tire is for emergency use only. The original tire should be repaired or replaced as soon as possible to avoid failure of the spare that may possibly lead to bodily injury or death.

The compact spare should be inflated to 420 kPa (60 psi).

✻ NOTICE

Check the inflation pressure after installing the spare tire. Adjust it to the specified pressure, as necessary.

When using a compact spare tire, observe the following precautions:

- Under no circumstances should you exceed 80 km/h (50 mph); a higher speed could damage the tire.
- Ensure that you drive slowly enough for the road conditions to avoid all hazards. Any road hazard, such as a pothole or debris, could seriously damage the compact spare.
- Any continuous road use of this tire could result in tire failure, loss of vehicle control, and possible personal injury.
- Do not exceed the vehicle's maximum load rating or the load-carrying capacity shown on the sidewall of the compact spare tire.
- Avoid driving over obstacles. The compact spare tire diameter is smaller than the diameter of a conventional tire and reduces the ground clearance approximately 25 mm (1 inch), which could result in damage to the vehicle.
- Do not take this vehicle through an automatic car wash while the compact spare tire is installed.
- The compact spare tire should not be installed on the front axle if the vehicle must be driven in snow or on ice.

- Do not use the compact spare tire on any other vehicle because this tire has been designed especially for your vehicle.
- The compact spare tire's tread life is shorter than a regular tire. Inspect your compact spare tire regularly and replace worn compact spare tires with the same size and design, mounted on the same wheel.
- The compact spare tire should not be used on any other wheels, nor should standard tires, snow tires, wheel covers or trim rings be used with the compact spare wheel. If such use is attempted, damage to these items or other car components may occur.
- Do not use more than one compact spare tire at a time.
- Do not tow a trailer while the compact spare tire is installed.

Jack label

■ Example

• Type A

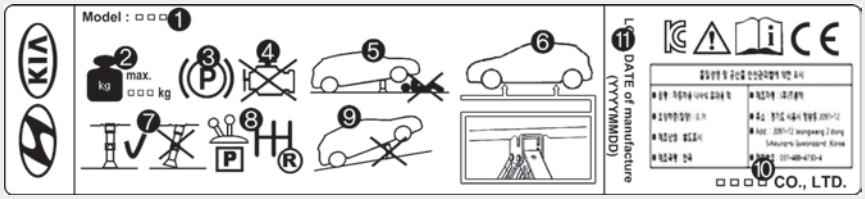

OHYK064001

• Type B

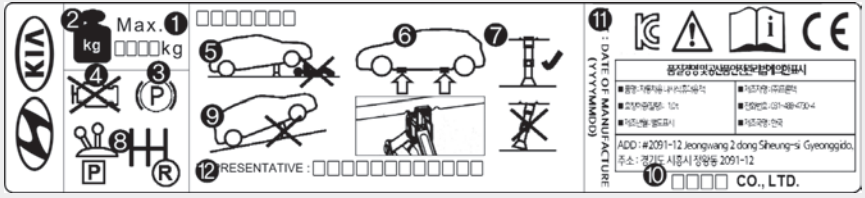

OHYK064005

• Type C

OHYK064002

❊ The actual Jack label in the vehicle may differ from the illustration. For more detailed specifications, refer to the label attached to the jack.

1. Model Name
2. Maximum allowable load
3. When using the jack, set your parking brake.
4. When using the jack, stop the engine.
5. Do not get under a vehicle that is supported by a jack.
6. The designated locations under the frame
7. When supporting the vehicle, the base plate of jack must be vertical under the lifting point.
8. Shift into Reverse gear on vehicles with Manual Transmission or move the shift lever to the P position on vehicles with Automatic Transmission.
9. The jack should be used on firm level ground.
10. Jack manufacturer
11. Production date
12. Representative company and address

TOWING

Towing service

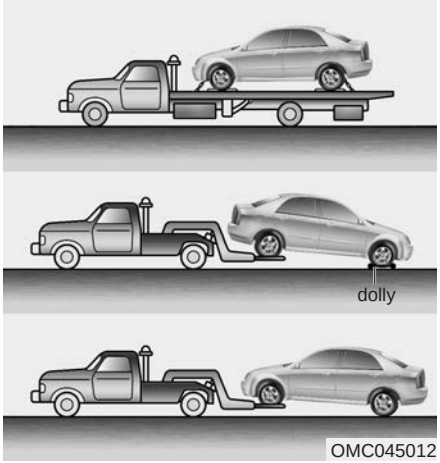

If emergency towing is necessary, we recommend having it done by an authorized Kia dealer or a commercial tow-truck service. Proper lifting and towing procedures are necessary to prevent damage to the vehicle. The use of wheel dollies or flatbed is recommended.

It is acceptable to tow the vehicle with the rear wheels on the ground (without dollies) and the front wheels off the ground.

If any of the loaded wheels or suspension components are damaged or the vehicle is being towed with the front wheels on the ground, use a towing dolly under the front wheels.

When being towed by a commercial tow truck and wheel dollies are not used, the front of the vehicle should always be lifted, not the rear.

⚠ WARNING - Side and curtain air bag

If your vehicle is equipped with side and curtain air bag, set the ignition switch to LOCK or ACC position when the vehicle is being towed. The side and curtain air bag may deploy when the ignition is ON, and the rollover sensor detects the situation as a rollover.

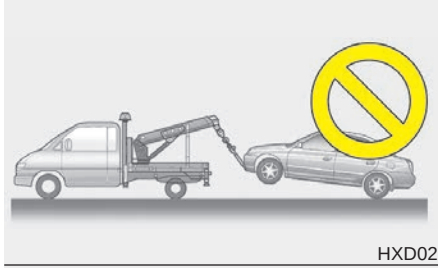

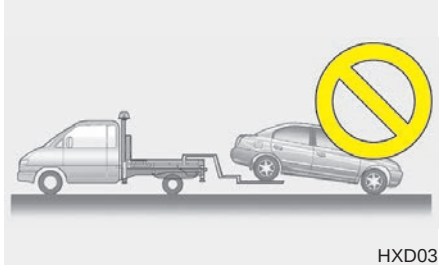

⚠ CAUTION - Towing

- ***Do not tow the vehicle backwards with the front wheels on the ground as this may cause damage to the vehicle.***
- ***Do not tow with sling-type equipment. Use wheel lift or flatbed equipment.***

When towing your vehicle in an emergency without wheel dollies :

1. Set the ignition switch in the ACC position.
2. Place the transmission shift lever in N (Neutral).
3. Release the parking brake.

⚠ **CAUTION - Towing gear position**

Always place the transmission shift lever in N (Neutral) when towing your vehicle. Failure to place the transmission shift lever in N (Neutral) may cause internal damage to the transmission.

Removable towing hook (front) (if equipped)

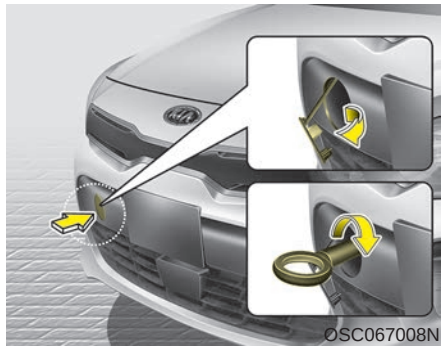

1. Remove the towing hook from the tool case located in the trunk/tailgate.
2. Remove the hole cover pressing the lower part of the cover on the front bumper.
3. Install the towing hook by turning it clockwise into the hole until it is fully secured.
4. Remove the towing hook and install the cover after use.

Emergency towing

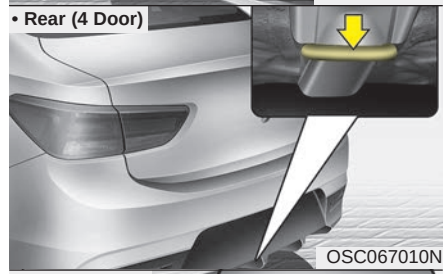

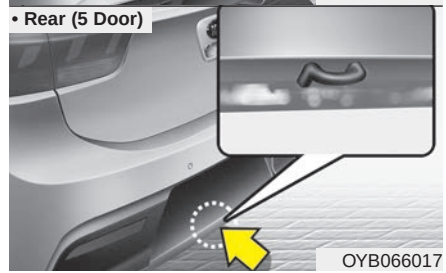

If towing is necessary, we recommend you have it done by an authorized Kia dealer or a commercial tow truck service.

If towing service is not available in an emergency, your vehicle may be temporarily towed using a cable or chain secured to the emergency towing hook under the front (or rear) of the vehicle. Use extreme caution when towing the vehicle. A driver must be in the vehicle to steer it and operate the brakes.

Towing in this manner may be done only on hard-surfaced roads for a short distance and at low speeds. Also, the wheels, axles, power train, steering and brakes must all be in good condition.

- Do not use the towing hooks to pull a vehicle out of mud, sand or other conditions from which the vehicle cannot be driven out under its own power.
- Avoid towing a vehicle heavier than the vehicle doing the towing.
- The drivers of both vehicles should communicate with each other frequently.
- Attach a towing strap to the towing hook.
- Using a portion of the vehicle other than the tow hooks for towing may damage the body of your vehicle.
- Use only a cable or chain specifically intended for use in towing vehicles. Securely fasten the cable or chain to the towing hook provided.
- Before emergency towing, check that the hook is not broken or damaged.
- Fasten the towing cable or chain securely to the hook.
- Do not jerk the hook. Apply it steadily with even force.
- To avoid damaging the hook, do not pull from the side or at a vertical angle. Always pull straight ahead.

⚠ CAUTION

Using a portion of the vehicle other than the tow hooks for towing may damage the body of your vehicle.

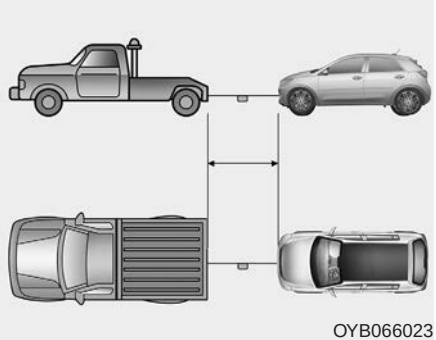

OYB066023

- Use a towing strap less than 5 m (16 feet) long. Attach a white or red cloth (about 30 cm (12 inches) wide) in the middle of the strap for easy visibility.
- Drive carefully so that the towing strap is not loosened during towing.

⚠ WARNING - Emergency Towing Precautions

Use extreme caution when towing the vehicle.

- **Avoid sudden starts or erratic driving maneuvers which would place excessive stress on the emergency towing hook and towing cable or chain. The hook and towing cable or chain may break and cause serious injury or damage.**
- **If the disabled vehicle is unable to be moved, do not forcibly continue the towing. In this case, contact an authorized Kia dealer or a commercial tow truck service for assistance.**
- **Tow the vehicle as straight ahead as possible.**
- **Keep away from the vehicle during towing.**

Emergency towing precautions

- Turn the ignition switch to ACC so the steering wheel isn't locked.
- Place the transmission shift lever in N (Neutral).
- Release the parking brake.
- Press the brake pedal with more force than normal since you will have reduced brake performance.
- More steering effort will be required because the power steering system will be disabled.
- If you are driving down a long hill, the brakes may overheat and brake performance will be reduced. Stop often and let the brakes cool off.

If the car is being towed with all four wheels on the ground, it can be towed only from the front. Be sure that the transmission is in neutral. Be sure the steering is unlocked by placing the ignition switch in the ACC position. A driver must be in the towed vehicle to operate the steering and brakes.

⚠ CAUTION - Automatic Transmission

- ***To avoid serious damage to the Automatic Transmission, limit the vehicle speed to 10 mph (15 km/h) and drive less than 1 mile (1.5 km/h) when towing.***
- ***Before towing, check for an Automatic Transmission fluid leak under your vehicle. If the Automatic Transmission fluid is leaking, a flatbed equipment or towing dolly must be used.***

Maintenance

Engine compartment 8-4
Maintenance services 8-5
• Owner's responsibility 8-5
• Owner maintenance precautions 8-6
Owner maintenance 8-7
• Owner maintenance schedule. 8-7
Scheduled maintenance service. 8-10
• Scheduled maintenance service precaution 8-10
Explanation of scheduled maintenance items . . . 8-16
Checking fluid levels 8-20
Engine oil. 8-21
• Checking the engine oil level 8-21
• Changing the engine oil and filter 8-22
Engine coolant 8-23
• Checking the coolant level 8-23
• Changing the coolant 8-25
Brake/clutch fluid. 8-26
• Checking the brake/clutch fluid level 8-26
Washer fluid 8-27
• Checking the washer fluid level. 8-27
Parking brake. 8-28
• Checking the parking brake. 8-28
Air cleaner. 8-29
• Filter replacement 8-29
Climate control air filter 8-31
• Filter inspection. 8-31
Wiper blades 8-33
• Blade inspection. 8-33
• Blade replacement 8-33
Battery. 8-37
• For best battery service 8-37
• Recharging the battery 8-38
• Reset items 8-39
Tires and wheels 8-40
• Tire care 8-40
• Recommended cold tire inflation pressures 8-40
• Tire pressure 8-41
• Checking tire inflation pressure. 8-41
• Tire rotation. 8-42
• Wheel alignment and tire balance. 8-43
• Tire replacement 8-44
• Wheel replacement 8-45
• Tire traction. 8-45
• Tire maintenance. 8-45
• Tire sidewall labeling 8-45
• All season tires. 8-52
• Summer tires 8-52
• Snow tires. 8-53

• Radial-ply tires 8-53
• Low aspect ratio tire 8-54

Fuses 8-55

• Inner panel fuse replacement 8-57
• Memory fuse 8-58
• Engine compartment fuse replacement 8-59
• Fuse/relay panel description 8-61

Light bulbs 8-70

• Bulb replacement precaution 8-70
• Light bulb position (front) 8-72
• Light bulb position (rear) (5 door) 8-73
• Light bulb position (rear) (4 door) 8-74
• Light bulb position (side) 8-75
• Headlamp (Low/High beam) (Bulb type) bulb replacement (Headlamp Type A) 8-75
• Side marker (front) (Bulb type) bulb replacement (Headlamp Type A) 8-76
• Front turn signal lamp bulb replacement (Headlamp Type A) 8-77
• Headlamp (Low/High beam) (Bulb type) bulb replacement (Headlamp Type B) 8-78
• Headlamp (Low/High beam) (LED type) bulb replacement (Headlamp Type B) 8-79
• Front turn signal lamp bulb replacement (Headlamp Type B) 8-79
• Side marker (front) (LED type) bulb replacement (Headlamp Type B) 8-80
• Front fog lamp bulb replacement 8-80
• Position lamp + DRL (LED type) bulb replacement . 8-81
• Daytime running lamp (Bulb type) bulb replacement 8-81
• Side repeater lamp (LED type) bulb Replacement . 8-82
• Side repeater lamp (bulb type) bulb Replacement . 8-82
• Stop and tail lamp bulb replacement (for 5 door) . . 8-83
• Rear turn signal lamp bulb replacement (for 5 door) 8-84
• Stop and tail lamp (LED type) bulb replacement (for 5 door) 8-85
• Back-up lamp bulb replacement (for 5 door) 8-86
• Tail lamp (inside) bulb replacement (for 5 door) . . . 8-86
• Side marker (rear) (Bulb type) bulb replacement (Rear combination lamp Type A) (for 5 door) 8-87
• Side marker (rear) (LED type) bulb replacement (Rear combination lamp Type B) (for 5 door) 8-88
• High mounted stop lamp bulb replacement (for 5 door) 8-89
• License plate lamp bulb replacement 8-89
• Rear turn signal lamp bulb replacement (for 4 door) 8-90
• Stop and tail lamp / Side marker (Bulb type) replacement (for 4 door) 8-91

• Side marker (rear) (LED type) bulb replacement (Rear combination lamp Type B) (for 4 door) 8-92
• Back-up lamp bulb replacement (for 4 door). 8-92
• Tail lamp (Bulb type) bulb replacement (for 4 door) . 8-93
• Stop and tail lamp (LED type) bulb replacement (for 4 door). 8-94
• High mounted stop lamp bulb replacement (for 4 door). 8-94
• Trunk lamp bulb replacement (for 4 door) 8-95
• Map lamp bulb replacement 8-95
• Vanity mirror lamp bulb replacement 8-96
• Room lamp bulb replacement 8-97
• Glove box lamp bulb replacement 8-97
• Tailgate room lamp bulb replacement (for 5 door) . 8-98

Appearance care. 8-99
• Exterior care 8-99
• Interior care. 8-104

Emission control system 8-107
• Crankcase emission control system. 8-107
• Evaporative emission control (including ORVR: Onboard Refueling Vapor Recovery) system. . . . 8-107
• Exhaust emission control system 8-108

ENGINE COMPARTMENT

■ **Gamma 1.6L GDI Engine (Gasoline)**

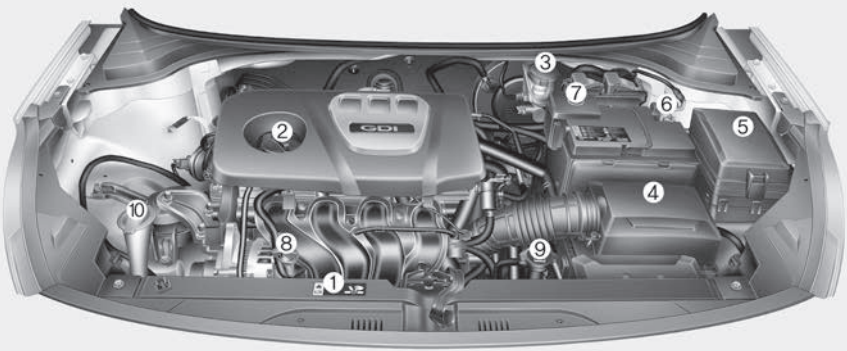

1. Engine coolant reservoir
2. Engine oil filler cap
3. Brake / clutch fluid reservoir
4. Air cleaner
5. Fuse box
6. Negative battery terminal
7. Positive battery terminal
8. Engine oil dipstick
9. Radiator cap
10. Windshield washer fluid reservoir

❊ The actual engine compartment in the vehicle may differ from the illustration.

OSC077013N

MAINTENANCE SERVICES

You should exercise the utmost care to prevent damage to your vehicle and injury to yourself whenever performing any maintenance or inspection procedures.

Should you have any doubts concerning the inspection or servicing of your vehicle, we strongly recommend that you have an authorized Kia dealer perform this work.

An authorized Kia dealer has factory-trained technicians and genuine Kia parts to service your vehicle properly. For expert advice and quality service, see an authorized Kia dealer.

Inadequate, incomplete or insufficient servicing may result in operational problems with your vehicle that could lead to vehicle damage, an accident, or personal injury.

Owner’s responsibility

✻ NOTICE

Maintenance Service and Record Retention are the owner's responsibility.
You should retain documents that show proper maintenance has been performed on your vehicle in accordance with the scheduled maintenance service charts shown on the following pages. You need this information to establish your compliance with the servicing and maintenance requirements of your vehicle warranties.
Detailed warranty information is provided in your Warranty & Consumer Information manual.

Repairs and adjustments required as a result of improper maintenance or a lack of required maintenance are not covered.

We recommend you have your vehicle maintained and repaired by an authorized Kia dealer. An authorized Kia dealer meets Kia’s high service quality standards and receives technical support from Kia in order to provide you with a high level of service satisfaction.

Owner maintenance precautions

Improper or incomplete service may result in problems. This section gives instructions only for the maintenance items that are easy to perform.

As explained earlier in this section, several procedures can be done only by an authorized Kia dealer with special tools.

✻ NOTICE

Improper owner maintenance during the warranty period may affect warranty coverage. For details, read the separate Warranty & Consumer Information manual provided with the vehicle. If you're unsure about any servicing or maintenance procedure, have it done by an authorized Kia dealer.

⚠ WARNING - Maintenance work

Do not wear jewelry or loose clothing while working under the hood of your vehicle with the engine running. These can become entangled in moving parts, if you must run the engine while working under the hood, make certain that you remove all jewelry (especially rings, bracelets, watches, and necklaces) and all neckties, scarves, and similar loose clothing before getting near the engine or cooling fans.

⚠ WARNING - Touching metal parts

Do not touch metal parts (including strut bars) while the engine is operating or hot. Doing so could result in serious personal injury. Turn the engine off and wait until the metal parts cool down to perform maintenance work on the vehicle.

OWNER MAINTENANCE

The following lists are vehicle checks and inspections that should be performed by the owner or an authorized Kia dealer at the frequencies indicated to help ensure safe, dependable operation of your vehicle.

Any adverse conditions should be brought to the attention of your dealer as soon as possible.

These Owner Maintenance Checks are generally not covered by warranties and you may be charged for labor, parts and lubricants used.

Owner maintenance schedule

When you stop for fuel:

- Check the engine oil level.
- Check the coolant level in coolant reservoir.
- Check the windshield washer fluid level.
- Look for low or under-inflated tires.

⚠ WARNING - Hot coolant

Be careful when checking your engine coolant level when the engine is hot. Scalding hot coolant and steam may blow out under pressure.

While operating your vehicle:

- Note any changes in the sound of the exhaust or any smell of exhaust fumes in the vehicle.
- Check for vibrations in the steering wheel. Notice any increased steering effort or looseness in the steering wheel, or change in its straight-ahead position.
- Notice if your vehicle constantly turns slightly or “pulls” to one side when traveling on smooth, level road.
- When stopping, listen and check for unusual sounds, pulling to one side, increased brake pedal travel or “hard-to-push” brake pedal.

- If any slipping or changes in the operation of your transmission occurs, check the transmission fluid level.
- Check manual transmission operation, including clutch operation.
- Check the automatic transmission P (Park) function.
- Check the parking brake.
- Check for fluid leaks under your vehicle (water dripping from the air conditioning system during or after use is normal).

At least monthly:

- Check the coolant level in the engine coolant reservoir.
- Check the operation of all exterior lights, including the stoplights, turn signals and hazard warning flashers.
- Check the inflation pressures of all tires including the spare for tires that are worn, show uneven wear, or are damaged.
- Check for loose wheel lug nuts.

At least twice a year (i.e., every Spring and Fall) :

- Check the radiator, heater and air conditioning hoses for leaks or damage.
- Check the windshield washer spray and wiper operation. Clean the wiper blades with clean cloth dampened with washer fluid.
- Check the headlight alignment.
- Check the muffler, exhaust pipes, shields and clamps.
- Check the lap/shoulder belts for wear and function.

At least once a year :

- Clean the body and door drain holes.
- Lubricate the door hinges and check the hood hinges.
- Lubricate the door and hood locks and latches.
- Lubricate the door rubber weather-strips.
- Check the air conditioning system.
- Inspect and lubricate automatic transmission linkage and controls.
- Clean the battery and terminals.
- Check the brake/clutch fluid level.

SCHEDULED MAINTENANCE SERVICE

Scheduled maintenance service precaution

Follow the Normal Maintenance Schedule if the vehicle is usually operated where none of the following conditions apply. If any of the following conditions apply, follow the Maintenance Under Severe Usage Conditions.

- Repeated driving short distance of less than 8 km (5 miles) in normal temperature or less than 16 km (10 miles) in freezing temperature
- Extensive engine idling or low speed driving for long distances
- Driving on rough, dusty, muddy, unpaved, graveled or salt-spread roads
- Driving in areas using salt or other corrosive materials or in very cold weather
- Driving in heavy dust condition
- Driving in heavy traffic area
- Driving on uphill, downhill, or mountain road repeatedly
- Towing a trailer or using a camper, or roof rack
- Driving as a patrol car, taxi, other commercial use of vehicle towing
- Driving over 170 km/h (106 mph)
- Frequently driving in stop-and-go condition

If your vehicle is operated in any of the prior listed conditions, you should inspect, replace or refill more frequently, using the severe usage maintenance schedule instead of the normal usage maintenance schedule.

Normal Maintenance Schedule - Non Turbo Models

The following maintenance services must be performed to ensure good emission control and performance.

Keep receipts for all vehicle emission services to protect your warranty. Where both mileage and time are shown, the frequency of service is determined by whichever occurs first.

MAINTENANCE INTERVALS / MAINTENANCE ITEM		Number of months or driving distance, whichever comes first														
	Months	12	24	36	48	60	72	84	96	108	120	132	144	156	168	180
	Miles×1,000	7.5	15	22.5	30	37.5	45	52.5	60	67.5	75	82.5	90	97.5	105	112.5
	Km×1,000	12	24	36	48	60	72	84	96	108	120	132	144	156	168	180
Drive belts *1		At first, inspect at 96,000 km (60,000 miles) or 72 months, after that, inspect every 24,000 km (15,000 miles) or 24 months														
Engine oil and engine oil filter	Gamma 1.6L GDI	R	R	R	R	R	R	R	R	R	R	R	R	R	R	R
Fuel additives *2		Add every 12,000 km (7,500 miles) or 12 months														
Air cleaner filter		I	I	I	R	I	I	I	R	I	I	I	R	I	I	I
Spark plugs	Gamma 1.6L GDI	Replace every 156,000 km (97,500 miles)														
Valve clearance *3	Gamma 1.6L GDI	Inspect every 96,000 km (60,000 miles) or 72 months														
Rotate tires		Rotate every 10,000 km (6,000 miles)														

I : Inspect and if necessary, adjust, correct, clean or replace.

R : Replace or change.

*1 : The drive belt should be replaced when cracks occur or tension is reduced.

*2 : If TOP TIER Detergent Gasoline is not available, one bottle of additive is recommended. Additives are available from your authorized Kia dealer along with information on how to use them. Do not mix other additives.

*3 : Inspect for excessive valve noise and/or engine vibration and adjust if necessary. Have an authorized Kia dealer perform the operation.

Normal Maintenance Schedule - Non Turbo Models (CONT.)

MAINTENANCE INTERVALS / MAINTENANCE ITEM	Number of months or driving distance, whichever comes first														
	Months	12	24	36	48	60	72	84	96	108	120	132	144	156	168	180
	Miles×1,000	7.5	15	22.5	30	37.5	45	52.5	60	67.5	75	82.5	90	97.5	105	112.5
	Km×1,000	12	24	36	48	60	72	84	96	108	120	132	144	156	168	180
Climate control air filter (for evaporator and blower unit)		R	R	R	R	R	R	R	R	R	R	R	R	R	R	R
Vacuum hose		I	I	I	I	I	I	I	I	I	I	I	I	I	I	I
Coolant (Engine)		At first, replace at 192,000 km (120,000 miles) or 10 years, after that, replace every 48,000 km (30,000 miles) or 24 months														
Battery condition		I	I	I	I	I	I	I	I	I	I	I	I	I	I	I
Brake lines, hoses and connections (Including booster)		I	I	I	I	I	I	I	I	I	I	I	I	I	I	I
Brake discs and pads		I	I	I	I	I	I	I	I	I	I	I	I	I	I	I
Steering gear rack, linkage and boots		I	I	I	I	I	I	I	I	I	I	I	I	I	I	I
Drive shaft and boots		-	I	-	I	-	I	-	I	-	I	-	I	-	I	-
Suspension ball joints and mounting bolts		I	I	I	I	I	I	I	I	I	I	I	I	I	I	I
Air conditioner compressor/refrigerant		I	I	I	I	I	I	I	I	I	I	I	I	I	I	I
Exhaust system		I	I	I	I	I	I	I	I	I	I	I	I	I	I	I

I : Inspect and if necessary, adjust, correct, clean or replace.

R : Replace or change.

Normal Maintenance Schedule - Non Turbo Models (CONT.)

MAINTENANCE INTERVALS / MAINTENANCE ITEM	Number of months or driving distance, whichever comes first														
	Months	12	24	36	48	60	72	84	96	108	120	132	144	156	168	180
	Miles×1,000	7.5	15	22.5	30	37.5	45	52.5	60	67.5	75	82.5	90	97.5	105	112.5
	Km×1,000	12	24	36	48	60	72	84	96	108	120	132	144	156	168	180
Cooling system		-	-	-	I	-	I	-	I	-	I	-	I	-	I	-
Automatic transmission fluid		No check, No service required														
Manual transmission fluid *4		-	-	-	I	-	-	-	I	-	-	-	I	-	-	-
Vapor hose and fuel filler cap		-	I	-	I	-	I	-	I	-	I	-	I	-	I	-
Fuel tank air filter *5		-	I	-	I	-	I	-	I	-	I	-	I	-	I	-
Fuel lines, hoses and connections		-	-	-	I	-	-	-	I	-	-	-	I	-	-	-
Parking brake		-	I	-	I	-	I	-	I	-	I	-	I	-	I	-
Brake/clutch (if equipped) fluid		-	I	-	I	-	I	-	I	-	I	-	I	-	I	-
Clutch (if equipped) and brake pedal free play		I	I	I	I	I	I	I	I	I	I	I	I	I	I	I
All latch, hinges and locks		-	I	-	I	-	I	-	I	-	I	-	I	-	I	-
Canister		-	-	-	I	-	-	-	I	-	-	-	I	-	-	-

I : Inspect and if necessary, adjust, correct, clean or replace.

R : Replace or change.

*4 : Manual transmission fluid should be changed anytime it has been submerged in water.

*5 : Fuel tank air filter is considered to be maintenance free but periodic inspection is recommended as the level of maintenance will be dependent upon the quality fuel used in the vehicle.

Maintenance Under Severe Usage Conditions - Non Turbo Models

The following items must be serviced more frequently on cars normally used under severe driving conditions. Refer to the chart below for the appropriate maintenance intervals.

R : Replace I : Inspect and, after inspection, clean, adjust, repair or replace if necessary

MAINTENANCE ITEM		MAINTENANCE OPERATION	MAINTENANCE INTERVALS	DRIVING CONDITION
Engine oil and engine oil filter	Gamma 1.6L GDI	R	Every 6,000 km (3,750 miles) or 6 months	A, B, C, D, E, F, G, H, I, J, K
Air cleaner filter		R	More frequently	C, E
Spark plugs		R	More frequently	A, B, F, G, H, I, K
Automatic transmission fluid		R	Every 96,000 km (60,000 miles)	A, C, D, E, F, G, H, I, J
Manual transmission fluid		R	Every 120,000 km (75,000 miles)	C, D, E, F, G, H, I, J
Brake discs and pads, calipers and rotors		I	More frequently	C, D, E, G, H
Parking brake		I	More frequently	C, D, G, H
Steering gear rack, linkage and boots		I	More frequently	C, D, E, F, G
Suspension ball joints and mounting bolts		I	More frequently	C, D, E, F, G

MAINTENANCE ITEM	MAINTENANCE OPERATION	MAINTENANCE INTERVALS	DRIVING CONDITION
Drive shafts and boots	I	More frequently	C, D, E, F, G, H, I, J
Climate control air filter (for evaporator and blower unit)	R	More frequently	C, E, G

Severe driving conditions

A - Repeatedly driving short distance of less than 8 km (5 miles) in normal temperature or less than 16 km (10 miles) in freezing temperature

B - Extensive engine idling or low speed driving for long distances

C - Driving on rough, dusty, muddy, unpaved, graveled or salt-spread roads

D - Driving in areas using salt or other corrosive materials or in very cold weather

E - Driving in heavy dust condition

F - Driving in heavy traffic area

G - Driving on uphill, downhill, or mountain road repeatedly

H - Towing a Trailer, or using a camper, or roof rack

I - Driving as a patrol car, taxi, other commercial use or vehicle towing

J - Driving over 170 km/h (106 mph)

K - Frequently driving in stop-and-go conditions

EXPLANATION OF SCHEDULED MAINTENANCE ITEMS

Engine oil and filter

The engine oil and filter should be changed at the intervals specified in the maintenance schedule. If the vehicle is being driven in severe conditions, more frequent oil and filter changes are required.

Drive belts

Inspect all drive belts for evidence of cuts, cracks, excessive wear or oil saturation and replace if necessary. Drive belts should be checked periodically for proper tension and adjusted as necessary.

Fuel filter (for gasoline)

Kia gasoline vehicle is equipped a lifetime fuel filter that integrated with the fuel tank. Regular maintenance or replacement is not needed but depends on fuel quality. If there are some important safety matters like fuel flow restriction, surging, loss of power, hard starting problem etc, fuel filter inspection or replace is needed.

The fuel filter be Inspected or replaced by an authorized Kia dealer.

Fuel lines, fuel hoses and connections

Check the fuel lines, fuel hoses and connections for leakage and damage. Have an authorized Kia dealer replace any damaged or leaking parts immediately.

Vapor hose and fuel filler cap

The vapor hose and fuel filler cap should be inspected at the intervals specified in the maintenance schedule. Make sure that a new vapor hose or fuel filler cap is installed correctly.

Vacuum crankcase ventilation hoses

Inspect the surface of hoses for evidence of heat and/or mechanical damage. Hard and brittle rubber, cracking, tears, cuts, abrasions, and excessive swelling indicate deterioration. Particular attention should be paid to examine those hose surfaces nearest to high heat sources, such as the exhaust manifold.

Inspect the hose routing to assure that the hoses do not come in contact with any heat source, sharp edges or moving component which might cause heat damage or mechanical wear. Inspect all hose connections, such as clamps and couplings, to make sure they are secure, and that no leaks are present. Hoses should be replaced immediately if there is any evidence of deterioration or damage.

Air cleaner filter

A Genuine Kia air cleaner filter is recommended when the filter is replaced.

Spark plugs

Make sure to install new spark plugs of the correct heat range.

Valve clearance (if equipped)

Inspect excessive valve noise and/or engine vibration and adjust if necessary. An authorized Kia dealer should perform the operation.

Cooling system

Check the cooling system components, such as the radiator, coolant reservoir, hoses and connections for leakage and damage. Replace any damaged parts.

Coolant

The coolant should be changed at the intervals specified in the maintenance schedule.

Manual transmission fluid (if equipped)

Inspect the manual transmission fluid according to the maintenance schedule.

Automatic transmission fluid (if equipped)

Automatic transmission fluid should not be checked under normal usage conditions.

But in severe conditions, the fluid should be changed at an authorized Kia dealer in accordance to the scheduled maintenance at the beginning of this chapter.

✻ NOTICE

Automatic transmission fluid color is basically red.
As the vehicle is driven, the automatic transmission fluid will begin to look darker.
It is normal condition and you should not judge the need to replace the fluid based upon the changed color.

⚠ **CAUTION**

Use only specified automatic transmission fluid. The use of a non-specified fluid could result in a transmission malfunction and failure. (Refer to "Recommended lubricants and capacities" in chapter 9.)

Brake hoses and lines

Visually check for proper installation, chafing, cracks, deterioration and any leakage. Replace any deteriorated or damaged parts immediately.

Brake/Clutch fluid

Check the brake/clutch fluid level in the brake/clutch fluid reservoir. The level should be between “MIN” and “MAX” marks on the side of the reservoir. Use only hydraulic brake/clutch fluid conforming to DOT 3 or DOT 4 specification.

Parking brake

Inspect the parking brake system including the parking brake lever and cables.

Brake discs, pads, calipers and rotors

Check the pads for excessive wear, discs for run out and wear, and calipers for fluid leakage.

Exhaust pipe and muffler

Visually inspect the exhaust pipes, muffler and hangers for cracks, deterioration, or damage. Start the engine and listen carefully for any exhaust gas leakage. Tighten connections or replace parts as necessary.

Suspension mounting bolts

Check the suspension connections for looseness or damage. Retighten to the specified torque.

Steering gear box, linkage & boots/lower arm ball joint

With the vehicle stopped and engine off, check for excessive free-play in the steering wheel.

Check the linkage for bends or damage. Check the dust boots and ball joints for deterioration, cracks, or damage. Replace any damaged parts.

Drive shafts and boots

Check the drive shafts, boots and clamps for cracks, deterioration, or damage. Replace any damaged parts and, if necessary, repack the grease.

Air conditioning refrigerant

Check the air conditioning lines and connections for leakage and damage.

CHECKING FLUID LEVELS

When checking engine oil, engine coolant, brake fluid, and washer fluid, always be sure to clean the area around any filler plug, drain plug, or dipstick before checking or draining any lubricant or fluid. This is especially important in dusty or sandy areas and when the vehicle is used on unpaved roads. Cleaning the plug and dipstick areas will prevent dirt and grit from entering the engine and other mechanisms that could be damaged.

ENGINE OIL

Checking the engine oil level

■ Gamma 1.6L GDI Engine (Gasoline)

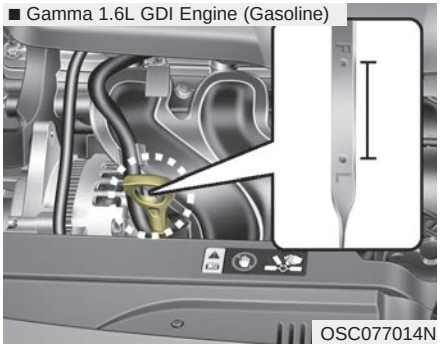

OSC077014N

1. Be sure the vehicle is on level ground.
2. Start the engine and allow it to reach normal operating temperature.
3. Turn the engine off and wait for a few minutes (about 5 minutes) for the oil to return to the oil pan.
4. Pull the dipstick out, wipe it clean, and reinsert it fully.

⚠ WARNING - Radiator hose

Be very careful not to touch the radiator hose when checking or adding the engine oil as it may be hot enough to burn you.

5. Pull the dipstick out again and check the level. The level should be between F and L.

⚠ CAUTION - Replacing engine oil

Do not overfill the engine oil. It may damage the engine.

■ Gamma 1.6L GDI Engine (Gasoline)

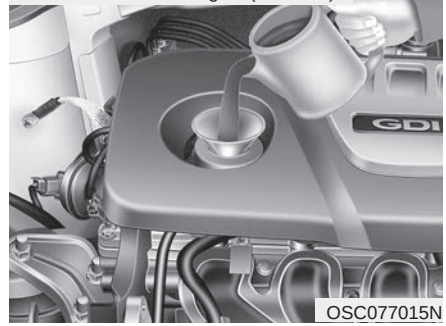

OSC077015N

If it is near or at L, add enough oil to bring the level to F. **Do not overfill.**

Use a funnel to help prevent oil from being spilled on engine components.

Use only the specified engine oil. (Refer to "Recommended lubricants and capacities" in chapter 9.)

Changing the engine oil and filter

Have engine oil and filter changed by an authorized Kia dealer according to the Maintenance Schedule at the beginning of this chapter.

⚠ WARNING - Used engine oil

Used engine oil may cause irritation or cancer of the skin if left in contact with the skin for prolonged periods of time. Always protect your skin by washing your hands thoroughly with soap and warm water as soon as possible after handling used oil.

ENGINE COOLANT

The high-pressure cooling system has a reservoir filled with year round antifreeze coolant. The reservoir is filled at the factory.

Check the antifreeze protection and coolant level at least once a year: at the beginning of the winter season, and before traveling to a colder climate.

Checking the coolant level

⚠ WARNING

Removing radiator cap

Never attempt to remove the radiator cap while the engine is operating or hot. Doing so might lead to cooling system and engine damage and could result in serious personal injury from escaping hot coolant or steam.

- Turn the engine off and wait until it cools down. Use extreme care when removing the radiator cap. Wrap a thick towel around it, and turn it counterclockwise slowly to the first stop. Step back while the pressure is released from the cooling system.

  When you are sure all the pressure has been released, press down on the cap, using a thick towel, and continue turning counterclockwise to remove it.
- Even if the engine is not operating, do not remove the radiator cap or the drain plug while the engine and radiator are hot. Hot coolant and steam may still blow out under pressure, causing serious injury.

⚠ WARNING - Cooling fan

Use caution when working near the blade of the cooling fan. The electric motor (cooling fan) is controlled by engine coolant temperature, refrigerant pressure and vehicle speed. it may sometimes operate even when the engine is not running.

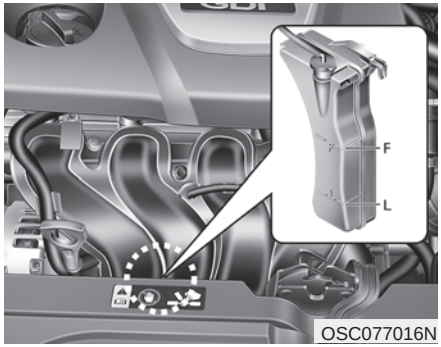

Check the condition and connections of all cooling system hoses and heater hoses. Replace any swollen or deteriorated hoses.

The coolant level should be filled between F and L marks on the side of the coolant reservoir when the engine is cool.

If the coolant level is low, add enough specified coolant to provide protection against freezing and corrosion. Bring the level to F, but do not overfill. If frequent additions are required, see an authorized Kia dealer for a cooling system inspection.

Recommended engine coolant

- When adding coolant, use only deionized water or soft water for your vehicle and never mix hard water in the coolant filled at the factory. An improper coolant mixture can result in serious malfunction or engine damage.
- The engine in your vehicle has aluminum engine parts and must be protected by an ethylene-glycol with phosphate based coolant to prevent corrosion and freezing.
- DO NOT USE alcohol or methanol coolant or mix them with the specified coolant.
- Do not use a solution that contains more than 60% antifreeze or less than 35% antifreeze. This would reduce the effectiveness of the solution.

✻ NOTICE

Make sure that the coolant cap is properly closed after refilling the coolant. Otherwise the engine could overheat while driving.

For mixture percentage, refer to the following table.

Ambient Temperature	Mixture Percentage (volume)	
	Antifreeze	Water
-15°C (5°F)	35	65
-25°C (-13°F)	40	60
-35°C (-31°F)	50	50
-45°C (-49°F)	60	40

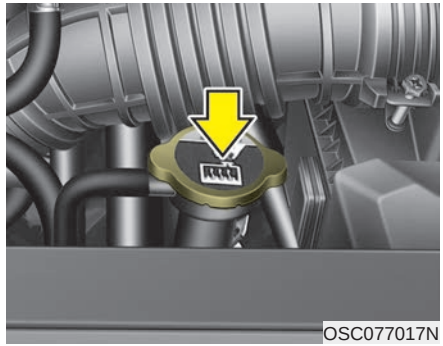
OSC077017N

⚠ WARNING

Radiator cap

Do not remove the radiator cap when the engine and radiator are hot. Scalding hot coolant and steam may blow out under pressure which may result in serious injury.

Changing the coolant

Have the coolant changed by an authorized Kia dealer according to the Maintenance Schedule at the beginning of this chapter.

⚠ CAUTION

Put a thick cloth or fabric around the radiator cap before refilling the coolant in order to prevent the coolant from overflowing into engine parts such as the alternator.

BRAKE/CLUTCH FLUID (IF EQUIPPED)

Checking the brake/clutch fluid level

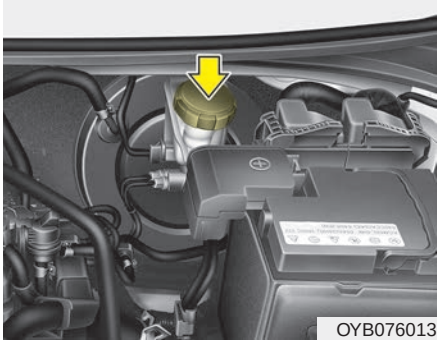

Check the fluid level in the reservoir periodically. The fluid level should be between MAX (Maximum) and MIN (Minimum) marks on the side of the reservoir.

Before removing the reservoir cap and adding brake/clutch fluid, clean the area around the reservoir cap thoroughly to prevent brake/clutch fluid contamination.

⚠ CAUTION - Proper fluid

Only use brake/clutch fluid in brake system. Small amounts of improper fluids (such as engine oil) can cause damage to the brake system.

If the level is low, add fluid to the MAX (Maximum) level. The level will fall with accumulated mileage. This is a normal condition associated with the wear of brake linings. If the fluid level is excessively low, have the brake system checked by an authorized Kia dealer.

Use only the specified brake/clutch fluid. (Refer to “Recommended lubricants and capacities” in chapter 9.)

Never mix different types of fluid.

In the event the brake system requires frequent additions of fluid, the vehicle should be inspected by an authorized Kia dealer.

When changing and adding brake/clutch fluid, handle it carefully. Do not let it come in contact with your eyes. If brake/clutch fluid should come in contact with your eyes, immediately flush them with a large quantity of fresh tap water. Have your eyes examined by a doctor as soon as possible.

⚠ CAUTION - Brake/clutch fluid

Do not allow brake/clutch fluid to contact the vehicle's body paint, as paint damage will result.

Brake/clutch fluid, which has been exposed to open air for an extended time should never be used as its quality cannot be guaranteed. It should be disposed of properly.

WASHER FLUID

Checking the washer fluid level

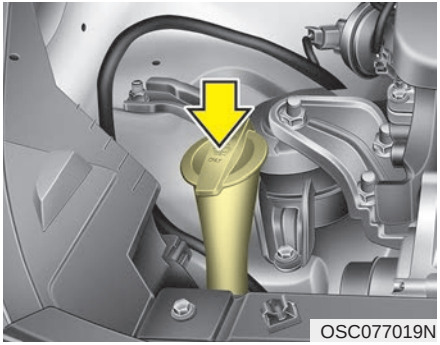
OSC077019N

The reservoir is translucent so that you can check the level with a quick visual inspection.

Check the fluid level in the washer fluid reservoir and add fluid if necessary. In warm climate, plain water may be used if washer fluid is not available. However, use washer solvent with antifreeze characteristics in cold climates to prevent freezing.

⚠ WARNING - Flammable fluid

Do not allow the washer fluid to come in contact with open flames or sparks. The windshield washer fluid reservoir is flammable under certain circumstances. This can result in a fire.

⚠ WARNING - Coolant

- **Do not use radiator coolant or antifreeze in the washer fluid reservoir.**
- **Radiator coolant can severely obscure visibility when sprayed on the windshield and may cause loss of vehicle control.**

⚠ WARNING - Windshield fluid

Do not drink the windshield washer fluid. The windshield washer fluid is poisonous to humans and animals.

PARKING BRAKE

Checking the parking brake

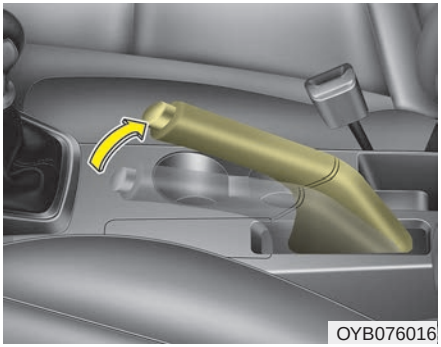

Check the stroke of the parking brake by counting the number of “clicks” heard while fully applying it from the released position. Also, the parking brake alone should securely hold the vehicle on a fairly steep grade. If the stroke is more or less than specified, have the parking brake adjusted by an authorized Kia dealer.

Stroke : 5~7 “clicks” at a force of 20 kg (44 lbs, 196 N).

AIR CLEANER

Filter replacement

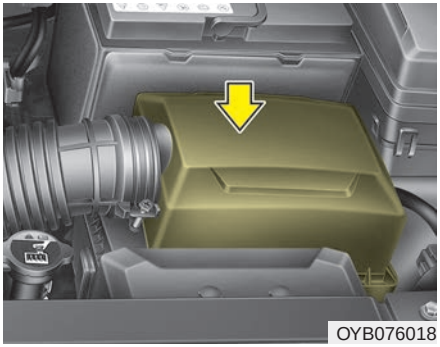
OYB076018

It must be replaced when necessary, and should not be washed.

You can clean the filter when inspecting the air cleaner compartment. Clean the filter by using compressed air.

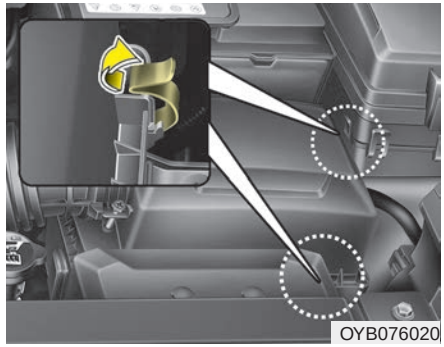
OYB076020

1. Loosen the air cleaner cover attaching clips and open the cover.

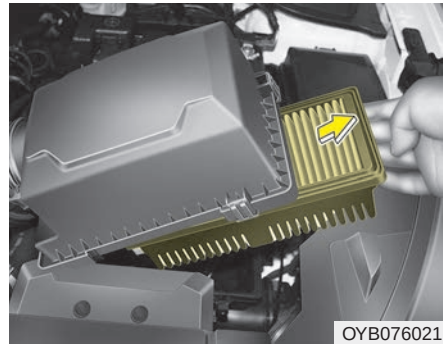
OYB076021

2. Wipe the inside of the air cleaner.
3. Replace the air cleaner filter.
4. Lock the cover with the cover attaching clips.

Replace the filter according to the Maintenance Schedule.

If the vehicle is operated in extremely dusty or sandy areas, replace the element more often than the usual recommended intervals. (Refer to "Maintenance under severe usage conditions" in this chapter.)

⚠ **CAUTION - Air filter maintenance**

- ***Do not drive with the air cleaner removed; this will result in excessive engine wear.***
- ***When removing the air cleaner filter, be careful that dust or dirt does not enter the air intake, or damage may result.***
- ***Use a Kia genuine part. Use of a non-genuine part could damage the air flow sensor.***

CLIMATE CONTROL AIR FILTER

Filter inspection

The climate control air filter should be replaced according to the Maintenance Schedule. If the vehicle is operated in severely air-polluted cities or on dusty rough roads for a long period, it should be inspected more frequently and replaced earlier. When you replace the climate control air filter, replace it performing the following procedure, and be careful to avoid damaging other components.

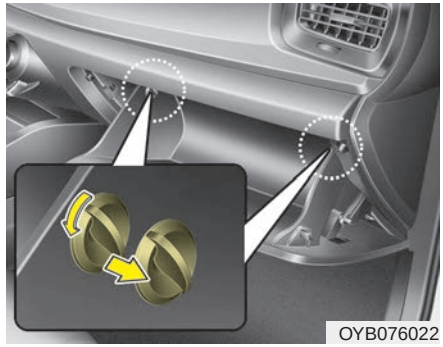

1. Open the glove box and remove the stoppers on both sides.

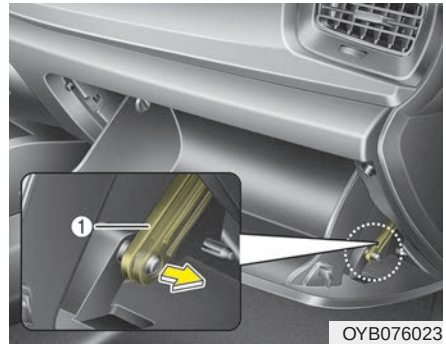

2. With the glove box open, pull the support strap (1).

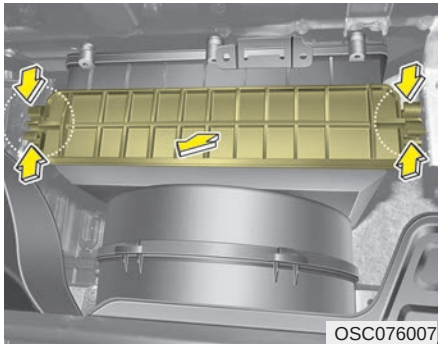

3. Remove the climate control air filter cover while pressing the lock on the both sides of the cover.

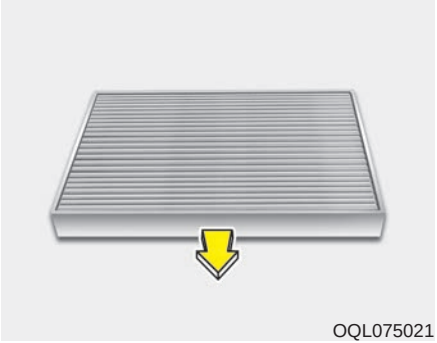

4. Replace the climate control air filter.
5. Reassemble in the reverse order of disassembly.

When replacing the climate control air filter install it properly. Otherwise, the system may produce noise and the effectiveness of the filter may be reduced.

WIPER BLADES

Blade inspection

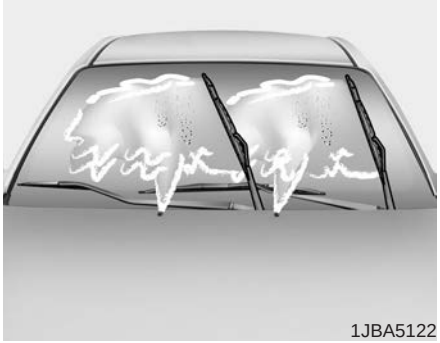

Commercial hot waxes applied by automatic car washes have been known to make the windshield difficult to clean.

Contamination of either the windshield or the wiper blades with foreign matter can reduce the effectiveness of the windshield wipers. Common sources of contamination are insects, tree sap, and hot wax treatments used by some commercial car washes. If the blades are not wiping properly, clean both the window and the blades with a good cleaner or mild detergent, and rinse thoroughly with clean water.

⚠ CAUTION - Wiper blades

To prevent damage to the wiper blades, do not use gasoline, kerosene, paint thinner, or other solvents on or near them.

Blade replacement

When the wipers no longer clean adequately, the blades may be worn or cracked, and require replacement.

To prevent damage to the wiper arms or other components, do not attempt to move the wipers manually.

Aftermarket wiper blades may result in wiper malfunction and/or failure. It is recommended to use certified Kia parts.

Front windshield wiper blade

⚠ CAUTION - Wiper arms

Do not allow the wiper arm to fall against the windshield, since it may chip or crack the windshield.

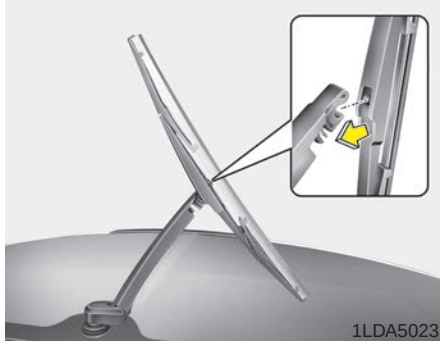

Type A

1. Raise the wiper arm and turn the wiper blade assembly to expose the plastic locking clip.

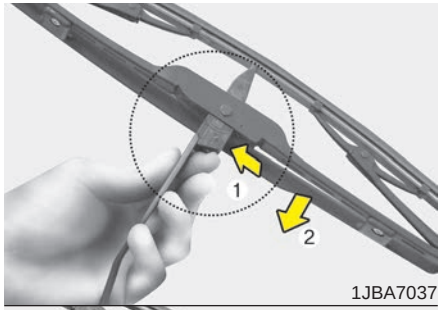

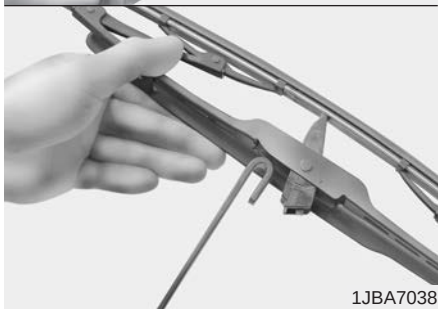

2. Compress the clip (1) and slide the blade assembly downward (2).
3. Lift it off the arm.
4. Install the blade assembly in the reverse order of removal.

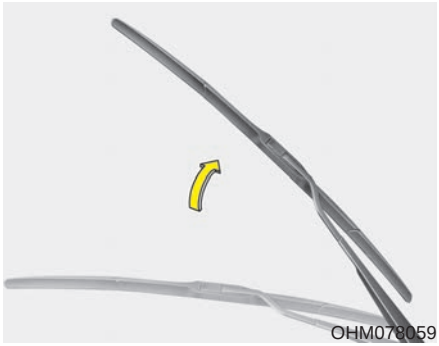

Type B

1. Raise the wiper arm.

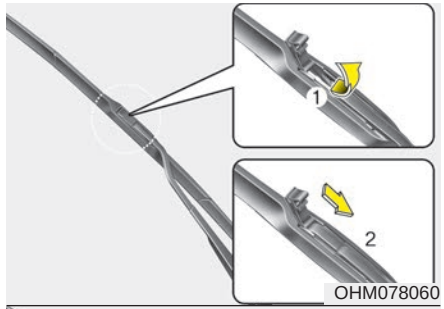

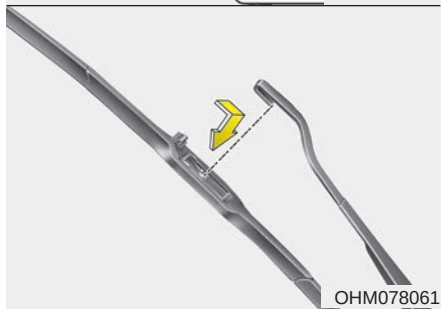

2. Lift up the wiper blade clip. Then pull down the blade assembly and remove it.
3. Install the new blade assembly in the reverse order of removal.

Rear window wiper blade (for 5 Door)

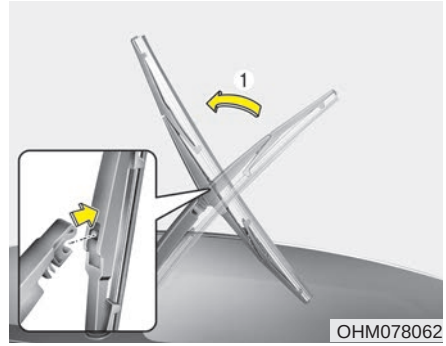

1. Raise the wiper arm and pull out the wiper blade assembly.

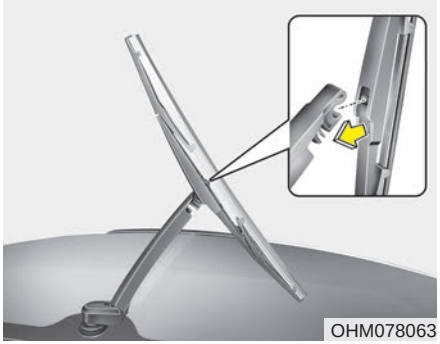

2. Install the new blade assembly by inserting the center part into the slot in the wiper arm until it clicks into place.
3. Make sure the blade assembly is installed firmly by trying to pull it slightly.

To prevent damage to the wiper arms or other components, have an authorized Kia dealer replace the wiper blade.

BATTERY

For best battery service

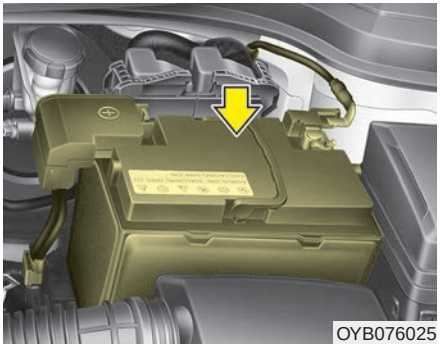
OYB076025

- Keep the battery securely mounted.
- Keep the battery top clean and dry.
- Keep the terminals and connections clean, tight, and coated with petroleum jelly or terminal grease.
- Rinse any spilled electrolyte from the battery immediately with a solution of water and baking soda.
- If the vehicle is not going to be used for an extended time, disconnect the battery cables.

WARNING - Risk of explosion

Keep lit cigarettes and all other flames or sparks away from the battery.

The battery contains hydrogen -- a highly combustible gas which will explode if it comes in contact with a flame or spark.

Keep batteries out of the reach of children because batteries contain highly corrosive SULFURIC ACID and electrolytes. Do not allow battery acid to contact your skin, eyes, clothing or paint finish.

Wear eye protection when charging or working near a battery. Always provide ventilation when working in an enclosed space.

Always read the following instructions carefully when handling a battery.

If any electrolyte gets into your eyes, flush your eyes with clean water for at least 15 minutes and get immediate medical attention.

If electrolyte gets on your skin, thoroughly wash the contacted area. If you feel pain or burning sensation, get medical attention immediately.

An inappropriately disposed battery can be harmful to the environment and human health. Dispose the battery according to your local law(s) or regulation.

The battery contains lead. Do not dispose of it after use. Please return the battery to an authorized Kia dealer to be recycled.

Never attempt to recharge the battery when the battery cables are connected.

⚠ WARNING - Risk of electrocution

Never touch the electrical ignition system while the vehicle is running. This system works with high voltage which can shock you.

⚠ WARNING - Recharging Battery

Never attempt to recharge the battery when the battery cables are connected.

⚠ WARNING - Battery lead compound

Battery posts, terminals, and related accessories contain lead and lead compounds. Wash hands after handling.

✻ NOTICE

If you connect unauthorized electronic devices to the battery, the battery may be discharged. Never use unauthorized devices.

Recharging the battery

Your vehicle has a maintenance-free, calcium-based battery.

- If the battery becomes discharged in a short time (because, for example, the headlamps or interior lamps were left on while the vehicle was not in use), recharge it by slow charging (trickle) for 10 hours.
- If the battery gradually discharges because of high electric load while the vehicle is being used, recharge it at 20-30A for two hours.

When recharging the battery, observe the following precautions:

- The battery must be removed from the vehicle and placed in an area with good ventilation.
- Do not allow cigarettes, sparks, or flame near the battery.
- Watch the battery during charging, and stop or reduce the charging rate if the battery cells begin gassing (boiling) violently or if the temperature of the electrolyte of any cell exceeds 49°C (120°F).
- Wear eye protection when checking the battery during charging.
- Disconnect the battery charger in the following order.

1. Turn off the battery charger main switch.
2. Unhook the negative clamp from the negative battery terminal.
3. Unhook the positive clamp from the positive battery terminal.

- Before performing maintenance or recharging the battery, turn off all accessories and stop the engine.
- The negative battery cable must be removed first and installed last when the battery is disconnected.

Reset items

The following items should be reset after the battery has been discharged or the battery has been disconnected.

- Auto up/down window
- Sunroof
- Trip computer
- Climate control system

TIRES AND WHEELS

Tire care

For proper maintenance, safety, and maximum fuel economy, you must always maintain recommended tire inflation pressures and stay within the load limits and weight distribution recommended for your vehicle.

Recommended cold tire inflation pressures

All tire pressures (including the spare) should be checked when the tires are cold. “Cold Tires” means the vehicle has not been driven for at least three hours or driven less than 1.6 km (1 mile).

Recommended pressures must be maintained for the best ride, top vehicle handling, and minimum tire wear.

For recommended inflation pressure refer to “Tire and wheels” in chapter 9.

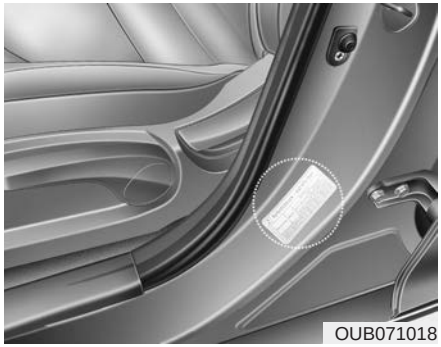
OUB071018

All specifications (sizes and pressures) can be found on a label attached to the driver’s side center pillar.

⚠ WARNING

- Checking the tire inflation pressure

Inflate your tires consistent with the instructions provided in this manual.

Regularly check the tire inflation pressure, and correct it as needed: at least twice a month and before a long trip.

If you fail to observe this precaution, you may be driving on tires with incorrect tire pressures, a condition that may not only compromise your vehicle's driving stability, but also lead to tire damage and the risk of an accident.

This risk is much higher on hot days and when driving for long periods at high speeds.

- Underinflation also results in excessive wear, poor handling and reduced fuel economy. Wheel deformation also is possible. Keep your tire pressures at the proper levels. If a tire frequently needs refilling, have it checked by an authorized Kia dealer.
- Overinflation produces a harsh ride, excessive wear at the center of the tire tread, and a greater possibility of damage from road hazards.
- Warm tires normally exceed recommended cold tire pressures by 28 to 41 kPa (4 to 6 psi). Do not release air from warm tires to adjust the pressure or the tires will be underinflated.
- Be sure to reinstall the tire inflation valve caps. Without the valve cap, dirt or moisture could get into the valve core and cause air leakage. If a valve cap is missing, install a new one as soon as possible.

Tire pressure

Always observe the following:

- Check tire pressure when the tires are cold. (After vehicle has been parked for at least three hours or hasn't been driven more than 1.6 km (1 mile) since startup.)
- Check the pressure of your spare tire each time you check the pressure of other tires.
- Never overload your vehicle. Be careful not to overload a vehicle luggage rack if your vehicle is equipped with one.

⚠ WARNING - Tire Inflation

Overinflation or underinflation can reduce tire life, adversely affect vehicle handling, and lead to sudden tire failure. This could result in loss of vehicle control and potential injury.

Checking tire inflation pressure

Check your tires once a month or more.

Also, check the tire pressure of the spare tire.

How to check

Use a good quality gauge to check tire pressure. You cannot tell if your tires are properly inflated simply by looking at them. Radial tires may look properly inflated even when they're underinflated.

Check the tire's inflation pressure when the tires are cold. - “Cold” means your vehicle has been sitting for at least three hours or driven no more than 1.6 km (1 mile).

Remove the valve cap from the tire valve stem. Press the tire gauge firmly onto the valve to get a pressure measurement. If the cold tire inflation pressure matches the recommended pressure on the tire and loading information label, no further adjustment is necessary. If the pressure is low, add air until you reach the recommended amount.

If you overfill the tire, release air by pushing on the metal stem in the center of the tire valve. Recheck the tire pressure with the tire gauge. Be sure to put the valve caps back on the valve stems. They help prevent leaks by keeping out dirt and moisture.

- Inspect your tires frequently for proper inflation as well as wear and damage. Always use a tire pressure gauge.
- Tires with too much or too little pressure wear unevenly causing poor handling, loss of vehicle control, and sudden tire failure leading to accidents, injuries, and even death. The recommended cold tire pressure for your vehicle can be found in this manual and on the tire label located on the driver's side center pillar.
- Remember to check the pressure of your spare tire. Kia recommends that you check the spare every time you check the pressure of the other tires on your vehicle.

Tire rotation

To equalize tread wear, it is recommended that the tires be rotated every 10,000 km (6,000 miles) or sooner if irregular wear develops.

During rotation, check the tires for correct balance.

When rotating tires, check for uneven wear and damage. Abnormal wear is usually caused by incorrect tire pressure, improper wheel alignment, out-of-balance wheels, severe braking or severe cornering. Look for bumps or bulges in the tread or side of tire. Replace the tire if you find either of these conditions. Replace the tire if fabric or cord is visible. After rotation, be sure to bring the front and rear tire pressures to specification and check lug nut tightness.

Refer to “Tire and wheels” in chapter 9.

Without a spare tire

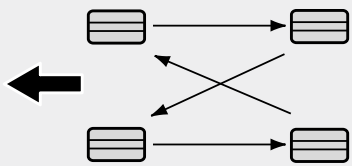

S2BLA790A

Directional tires (if equipped)

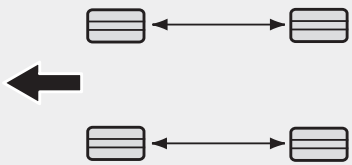

CBGQ0707A

Disc brake pads should be inspected for wear whenever tires are rotated.

Rotate radial tires that have an asymmetric tread pattern only from front to rear and not from right to left.

⚠ WARNING - Mixing tires

- **Do not use the compact spare tire (if equipped) for tire rotation.**
- **Do not mix bias ply and radial ply tires under any circumstances. This may cause unusual handling characteristics.**

Wheel alignment and tire balance

The wheels on your vehicle were aligned and balanced carefully at the factory to give you the longest tire life and best overall performance.

In most cases, you will not need to have your wheels aligned again. However, if you notice unusual tire wear or your vehicle pulling one way or the other, the alignment may need to be reset.

If you notice your vehicle vibrating when driving on a smooth road, your wheels may need to be rebalanced.

⚠ CAUTION - Wheel weight

Improper wheel weights can damage your vehicle's aluminum wheels. Use only approved wheel weights.

Tire replacement

If the tire is worn evenly, a tread wear Indicator (A) will appear as a solid band across the tread. This shows there is less than 1.6 mm (1/16 inch) of tread left on the tire. Replace the tire when this happens.

Do not wait for the band to appear across the entire tread before replacing the tire.

The ABS works by comparing the speed of the wheels. The tire size affects wheel speed. When replacing tires, all 4 tires must use the same size originally supplied with the vehicle. Using tires of a different size can cause the ABS (Anti-lock Brake System) and ESC (Electronic Stability Control) to work irregularly.

✻ NOTICE

- **We recommend that when replacing tires, use the same which were originally supplied with the vehicle. If not, driving performance could be altered.**
- **It is best to replace all four tires at the same time. If that is not possible, or necessary, then replace the two front or two rear tires as a pair. Replacing just one tire can seriously affect your vehicle's handling.**

Compact spare tire replacement

A compact spare tire has a shorter tread life than a regular size tire. Replace it when you can see the tread wear indicator bars on the tire. The replacement compact spare tire should be the same size and design tire as the one provided with your new vehicle and should be mounted on the same compact spare tire wheel. The compact spare tire is not designed to be mounted on a regular size wheel, and the compact spare tire wheel is not designed for mounting a regular size tire.

Wheel replacement

When replacing the metal wheels for any reason, make sure the new wheels are equivalent to the original factory units in diameter, rim width and offset.

A wheel that is not the correct size may adversely affect wheel and bearing life, braking and stopping abilities, handling characteristics, ground clearance, body-to-tire clearance, snow chain clearance, speedometer and odometer calibration, headlight aim and bumper height.

⚠ **CAUTION - Wheel**

Wheels that do not meet Kia's specifications may fit poorly and result in damage to the vehicle or unusual handling and poor vehicle control.

Tire traction

Tire traction can be reduced if you drive on worn tires, tires that are improperly inflated or on slippery road surfaces. Tires should be replaced when tread wear indicators appear. Slow down whenever there is rain, snow or ice on the road, to reduce the possibility of losing control of the vehicle.

Tire maintenance

In addition to proper inflation, correct wheel alignment helps to decrease tire wear. If you find a tire is worn unevenly, have your dealer check the wheel alignment.

When you have new tires installed, make sure they are balanced. This will increase vehicle ride comfort and tire life. Additionally, a tire should always be rebalanced if it is removed from the wheel.

Tire sidewall labeling

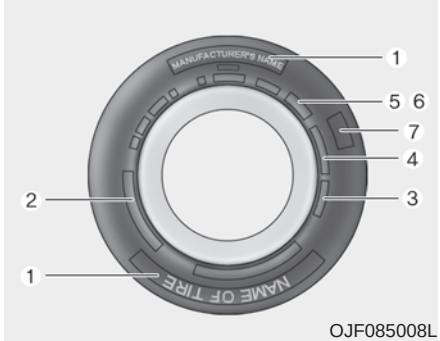

OJF085008L

This information identifies and describes the fundamental characteristics of the tire and also provides the tire identification number (TIN) for safety standard certification. The TIN can be used to identify the tire in case of a recall.

1. Manufacturer or brand name

Manufacturer or Brand name is shown.

2. Tire size designation

A tire's sidewall is marked with a tire size designation. You will need this information when selecting replacement tires for your car. The following explains what the letters and numbers in the tire size designation mean.

Example tire size designation:

(These numbers are provided as an example only; your tire size designator could vary depending on your vehicle.)

P205/55R16 89H

P - Applicable vehicle type (tires marked with the prefix "P" are intended for use on passenger vehicles or light trucks; however, not all tires have this marking).

205 - Tire width in millimeters.

55 - Aspect ratio. The tire's section height as a percentage of its width.

R - Tire construction code (Radial).

16 - Rim diameter in inches.

89 - Load Index, a numerical code associated with the maximum load the tire can carry.

H - Speed Rating Symbol. See the speed rating chart in this section for additional information.

Wheel size designation

Wheels are also marked with important information that you need if you ever have to replace one. The following explains what the letters and numbers in the wheel size designation mean.

Example wheel size designation:

6.0JX16

6.0 - Rim width in inches.

J - Rim contour designation.

16 - Rim diameter in inches.

Tire speed ratings

The chart below lists many of the different speed ratings currently being used for passenger vehicles. The speed rating is part of the tire size designation on the sidewall of the tire. This symbol corresponds to that tire's designed maximum safe operating speed.

Speed Rating Symbol	Maximum Speed
S	180 km/h (112 mph)
T	190 km/h (118 mph)
H	210 km/h (130 mph)
V	240 km/h (149 mph)
Z	Above 240 km/h (149 mph)

3. Checking tire life (TIN : Tire Identification Number)

Any tires that are over 6 years old, based on the manufacturing date, (including the spare tire) should be replaced by new ones. You can find the manufacturing date on the tire sidewall (possibly on the inside of the wheel), displaying the DOT Code. The DOT Code is a series of numbers on a tire consisting of numbers and English letters. The manufacturing date is designated by the last four digits (characters) of the DOT code.

DOT : XXXX XXXX OOOO

The front part of the DOT means a plant code number, tire size and tread pattern and the last four numbers indicate week and year manufactured.

For example:

DOT XXXX XXXX 1618 represents that the tire was produced in the 16th week of 2018.

⚠ WARNING - Tire age

Replace tires within the recommended time frame. Failure to replace tires as recommended can result in sudden tire failure, which could lead to a loss of control and an accident.

4. Tire ply composition and material

The number of layers or plies of rubber-coated fabric in the tire. Tire manufacturers also must indicate the materials in the tire, which include steel, nylon, polyester, and others. The letter "R" means radial ply construction; the letter "D" means diagonal or bias ply construction; and the letter "B" means belted-bias ply construction.

5. Maximum permissible inflation pressure

This number is the greatest amount of air pressure that should be put in the tire. Do not exceed the maximum permissible inflation pressure. Refer to the Tire and Loading Information label for recommended inflation pressure.

6. Maximum load rating

This number indicates the maximum load in kilograms and pounds that can be carried by the tire. When replacing the tires on the vehicle, always use a tire that has the same load rating as the factory installed tire.

7. Uniform tire quality grading

Quality grades can be found where applicable on the tire sidewall between tread shoulder and maximum section width.

For example:

TREADWEAR 440

TRACTION A

TEMPERATURE A

Tread wear

The tread wear grade is a comparative rating based on the wear rate of the tire when tested under controlled conditions on a specified government test course. For example, a tire graded 150 would wear one-and-a-half times (1½) as well on the government course as a tire graded 100.

The relative performance of tires depends upon the actual conditions of their use, however, and may depart significantly from the norm due to variations in driving habits, service practices and differences in road characteristics and climate.

Tires degrade over time, even when they are not being used. Regardless of the remaining tread, we recommend that tires be replaced after approximately six (6) years of normal service. Heat caused by hot climates or frequent high loading conditions can accelerate the aging process.

These grades are molded on the side-walls of passenger vehicle tires. The tires available as standard or optional equipment on your vehicles may vary with respect to grade.

Traction - AA, A, B & C

The traction grades, from highest to lowest, are AA, A, B and C. Those grades represent the tires ability to stop on wet pavement as measured under controlled conditions on specified government test surfaces of asphalt and concrete. A tire marked C may have poor traction performance.

The traction grade assigned to this tire is based on straight-ahead braking traction tests, and does not include acceleration, cornering, hydroplaning, or peak traction characteristics.

Temperature -A, B & C

The temperature grades are A (the highest), B and C representing the tire's resistance to the generation of heat and its ability to dissipate heat when tested under controlled conditions on a specified indoor laboratory test wheel.

Sustained high temperature can cause the material of the tire to degenerate and reduce tire life, and excessive temperature can lead to sudden tire failure. Grades B and A represent higher levels of performance on the laboratory test wheel than the minimum required by law.

Tire terminology and definitions

Air Pressure: The amount of air inside the tire pressing outward on the tire. Air pressure is expressed in kilopascal (kPa) or pounds per square inch (psi).

Accessory Weight: This means the combined weight of optional accessories. Some examples of optional accessories are, automatic transmission, power seats, and air conditioning.

Aspect Ratio: The relationship of a tire's height to its width.

Belt: A rubber coated layer of cords that is located between the plies and the tread. Cords may be made from steel or other reinforcing materials.

Bead: The tire bead contains steel wires wrapped by steel cords that hold the tire onto the rim.

Bias Ply Tire: A pneumatic tire in which the plies are laid at alternate angles less than 90 degrees to the centerline of the tread.

Cold Tire Pressure: The amount of air pressure in a tire, measured in kilopascals (kPa) or pounds per square inch (psi) before a tire has built up heat from driving.

Curb Weight: This means the weight of a motor vehicle with standard and optional equipment including the maximum capacity of fuel, oil and coolant, but without passengers and cargo.

DOT Markings: The DOT code includes the Tire Identification Number (TIN), an alphanumeric designator which can also identify the tire manufacturer, production plant, brand and date of production.

GVWR: Gross Vehicle Weight Rating

GAWR FRT: Gross Axle Weight Rating for the Front Axle.

GAWR RR: Gross Axle Weight Rating for the Rear axle.

Intended Outboard Sidewall: The side of an asymmetrical tire, that must always face outward when mounted on a vehicle.

Kilopascal (kPa): The metric unit for air pressure.

Light truck(LT) tire: A tire designated by its manufacturer as primarily intended for use on lightweight trucks or multipurpose passenger vehicles.

Load Index: An assigned number ranging from 1 to 279 that corresponds to the load carrying capacity of a tire.

Load ratings: The maximum load that a tire is rated to carry for a given inflation pressure.

Maximum Inflation Pressure: The maximum air pressure to which a cold tire may be inflated. The maximum air pressure is molded onto the sidewall.

Maximum Load Rating: The load rating for a tire at the maximum permissible inflation pressure for that tire.

Maximum Loaded Vehicle Weight: The sum of curb weight; accessory weight; vehicle capacity weight; and production options weight.

Normal Occupant Weight: The number of occupants a vehicle is designed to seat multiplied by 68kg (150 lbs.).

Occupant Distribution: Designated seating positions.

Outward Facing Sidewall: The side of a asymmetrical tire that has a particular side that faces outward when mounted on a vehicle. The outward facing sidewall bears white lettering or bears manufacturer, brand, and/or model name molding that is higher or deeper than the same moldings on the inner facing sidewall.

Passenger (P-Metric) Tire: A tire used on passenger cars and some light duty trucks and multipurpose vehicles.

Ply: A layer of rubber-coated parallel cords

Pneumatic tire: A mechanical device made of rubber, chemicals, fabric and steel or other materials, that, when mounted on an automotive wheel, provides the traction and contains the gas or fluid that sustains the load.

Production options weight: The combined weight of installed regular production options weighing over 2.3 kg (5 lb.) in excess of the standard items which they replace, not previously considered in curb weight or accessory weight, including heavy duty brakes, ride levelers, roof rack, heavy duty battery, and special trim.

Recommended Inflation Pressure: Vehicle manufacturer's recommended tire inflation pressure and shown on the tire placard.

Radial Ply Tire: A pneumatic tire in which the ply cords that extend to the beads are laid at 90 degrees to the centerline of the tread.

Rim: A metal support for a tire and upon which the tire beads are seated.

Sidewall: The portion of a tire between the tread and the bead.

Speed Rating: An alphanumeric code assigned to a tire indicating the maximum speed at which a tire can operate.

Traction: The friction between the tire and the road surface. The amount of grip provided.

Tread: The portion of a tire that comes into contact with the road.

Treadwear Indicators: Narrow bands, sometimes called "wear bars," that show across the tread of a tire when only 1/16 inch of tread remains.

UTQGS: Uniform Tire Quality Grading Standards, a tire information system that provides consumers with ratings for a tire's traction, temperature and treadwear. Ratings are determined by tire manufacturers using government testing procedures. The ratings are molded into the sidewall of the tire.

Vehicle Capacity Weight: The number of designated seating positions multiplied by 68kg (150 lbs.) plus the rated cargo and luggage load.

Vehicle Maximum Load on the Tire: Load on an individual tire due to curb and accessory weight plus maximum occupant and cargo weight.

Vehicle Normal Load on the Tire: Load on an individual tire that is determined by distributing to each axle its share of the curb weight, accessory weight, and normal occupant weight and driving by 2.

Vehicle Placard: A label permanently attached to a vehicle showing the original equipment tire size and recommended inflation pressure.

All season tires

Kia specifies all season tires on some models to provide good performance for use all year round, including snowy and icy road conditions. All season tires are identified by ALL SEASON and/or M+S (Mud and Snow) on the tire sidewall. Snow tires have better snow traction than all season tires and may be more appropriate in some areas.

Summer tires

Kia specifies summer tires on some models to provide superior performance on dry roads. Summer tire performance is substantially reduced in snow and ice. Summer tires do not have the tire traction rating M+S (Mud and Snow) on the tire side wall. If you plan to operate your vehicle in snowy or icy conditions, Kia recommends the use of snow tires or all season tires on all four wheels.

⚠ WARNING

Do not use summer tires at temperatures below 7°C (45°F) or when driving on snow or ice. At temperatures below 7°C (45°F), summer tires can lose elasticity, and therefore traction and braking power as well. Change the tires on your vehicle to winter or all-weather tires of the same size as the standard tires of the vehicle. Both types of tires are identified by the M+S (Mud and Snow) marking. Using summer tires at very cold temperatures could cause cracks to form, thereby damaging the tires permanently.

Snow tires

If you equip your car with snow tires, they should be the same size and have the same load capacity as the original tires. Snow tires should be installed on all four wheels; otherwise, poor handling may result.

Snow tires should carry 28 kPa (4 psi) more air pressure than the pressure recommended for the standard tires on the tire label on the driver's side of the center pillar, or up to the maximum pressure shown on the tire sidewall, whichever is less.

Do not drive faster than 120 km/h (75 mph) when your vehicle is equipped with snow tires.

Radial-ply tires

Radial-ply tires provide improved tread life, road hazard resistance and smoother high speed ride. The radial-ply tires used on this vehicle are of belted construction and are selected to complement the ride and handling characteristics of your vehicle.

Radial-ply tires have the same load carrying capacity as bias-ply or bias belted tires of the same size and use the same recommended inflation pressure. Mixing of radial-ply tires with bias-ply or bias belted tires is not recommended. Any combinations of radial-ply and bias-ply or bias belted tires when used on the same vehicle will seriously deteriorate vehicle handling. The best rule to follow is: identical radial-ply tires should always be used as a set of four.

Longer wearing tires can be more susceptible to irregular tread wear. It is very important to follow the tire rotation interval shown in this section to achieve the tread life potential of these tires. Cuts and punctures in radial-ply tires are repairable only in the tread area, because of sidewall flexing. Consult your tire dealer for radial-ply tire repairs.

Low aspect ratio tire (if equipped)

Low aspect ratio tires, whose aspect ratio is lower than 50, are provided for sporty looks.

Because the low aspect ratio tires are optimized for handling and braking, it may be more uncomfortable to ride in and there is more noise compare with normal tires.

⚠ CAUTION

Because the sidewall of the low aspect ratio tire is shorter than the normal, the wheel and tire of the low aspect ratio tire is easier to be damaged. So, follow the instructions below.

- ***When driving on a rough road or off road, drive cautiously because tires and wheels may be damaged. And after driving, inspect tires and wheels.***
- ***When passing over a pothole, speed bump, manhole, or curb stone, drive slowly so that the tires and wheels are not damaged.***
- ***If the tire is impacted, we recommend that you inspect the tire condition or contact an authorized Kia dealer.***
- ***To prevent damage to the tire, inspect the tire condition and pressure every 3,000 km (1,900 miles).***

- It is not easy to recognize the tire damage with your own eyes. In the event that the tire is impacted, have the tire checked or replaced because the tire damage may cause air leakage from the tire.
- If the tire is damaged by driving on a rough road, off road, pothole, manhole, or curb stone, it will not be covered by the warranty.
- You can find out the tire information on the tire sidewall.

FUSES

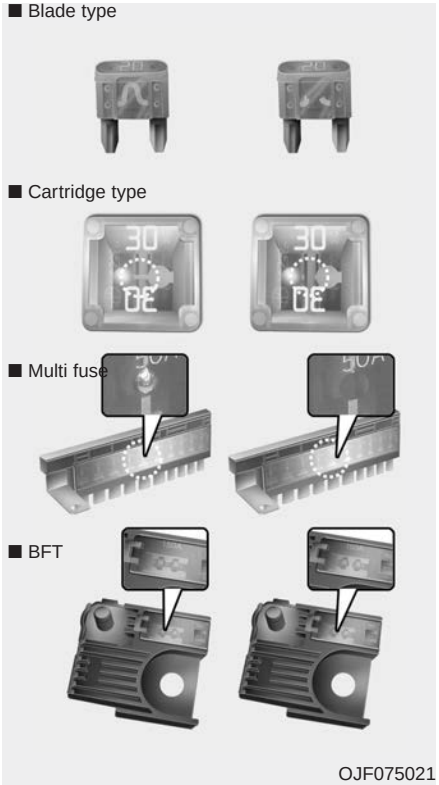

❈ Left side : Normal , Right side : Blown

A vehicle's electrical system is protected from electrical overload damage by fuses.

This vehicle has 2 (or 3) fuse panels, one located in the driver's side panel bolster, the other in the engine compartment near the battery.

If any of your vehicle's lights, accessories, or controls do not work, check the appropriate circuit fuse. If a fuse has blown, the element inside the fuse will melt.

If the electrical system does not work, first check the driver's side fuse panel.

Always replace a blown fuse with one of the same rating.

If the replacement fuse blows, this indicates an electrical problem. Avoid using the system involved and immediately consult an authorized Kia dealer.

Three kinds of fuses are used: blade type for lower amperage rating, cartridge type, and multi fuse for higher amperage ratings.

⚠ WARNING - Fuse replacement

- **Never replace a fuse with anything but another fuse of the same rating.**
- **A higher capacity fuse could cause damage and possibly a fire.**
- **Never install a wire or aluminum foil instead of the proper fuse - even as a temporary repair. It may cause extensive wiring damage and a possible fire.**
- **Do not modify or add-on electric wiring to the vehicle.**

⚠ CAUTION

Do not use a screwdriver or any other metal object to remove fuses because it may cause a short circuit and damage the system.

✻ NOTICE

- When replacing fuse, turn the ignition "OFF" and turn off switches of all electrical devices then remove battery (-) terminal.
- The actual fuse/relay panel label may differ from equipped items.

⚠ WARNING - Electrical Fire

Always ensure replacements fuses and relays are securely fastened when installed. Failure to do so can result in a vehicle fire.

⚠ CAUTION

- *When replacing a blown fuse or relay, make sure the new fuse or relay fits tightly into the clips. Failure to tightly install the fuse or relay may cause damage to the wiring and electric systems.*
- *Do not remove fuses, relays and terminals fastened with bolts or nuts. The fuses, relays and terminals may not be fastened correctly which may cause vehicle damage.*

⚠ CAUTION

- *Do not input any other objects except fuses or relays into fuse/relay terminals such as a driver or wiring. It may cause contact failure and system malfunction.*
- *Do not plug in screwdrivers or aftermarket wiring into the terminal originally designed for fuse and relays only. The electrical system and wiring of the vehicle interior may be damaged or burned due to contact failure.*
- *If you directly connect the wire on the taillight or replace the bulb which is over the regulated capacity to install trailers etc., the inner junction block can get burned.*

Inner panel fuse replacement

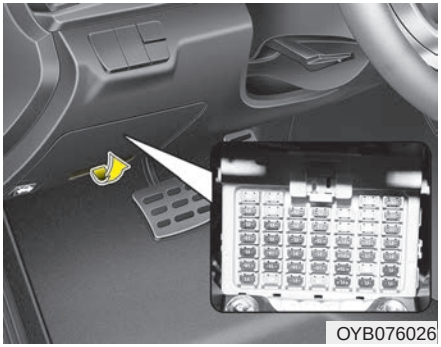
OYB076026

1. Turn the ignition switch and all other switches off.
2. Open the fuse panel cover.

If the switch is located in the “OFF” position, a caution indicator will be displayed in the cluster.

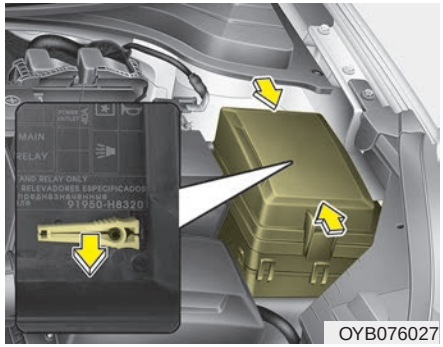

OYB076027

3. Pull the suspected fuse straight out. Use the removal tool provided on the engine compartment fuse panel cover.
4. Check the removed fuse; replace it if it is blown.

   Spare fuses are provided in the engine compartment fuse panel.
5. Push in a new fuse of the same rating, and make sure it fits tightly in the clips.

If it fits loosely, consult an authorized Kia dealer.

If you do not have a spare, use a fuse of the same rating from a circuit you may not need for operating the vehicle, such as the power outlet fuse.

If the head lamp, turn signal lamp, stop signal lamp, fog lamp, DRL, tail lamp, HMSL do not work and the fuses are OK, check the fuse panel in the engine compartment. If a fuse is blown, it must be replaced.

✻ NOTICE

If the headlamp, fog lamp, turn signal lamp, or tail lamp malfunction even without any problem to the lamps, have the vehicle checked by an authorized Kia dealer for assistance.

⚠ **CAUTION - Fuse Panel Covers**

The contact points of the switches may wear out with excessive use. Please refrain from excessive use of the switches (except for long-term parking for over 1 month).

✻ NOTICE

- **Set all switches to ON before driving.**
- **If the vehicle is going to be unused for over 1 month, set all switches to OFF to prevent the batteries from draining.**

Memory fuse

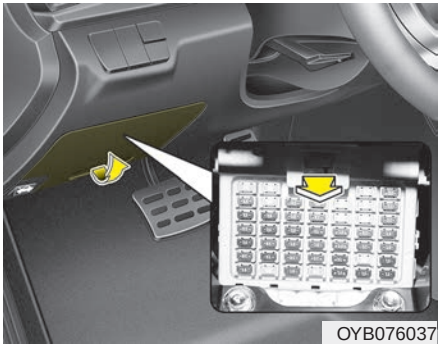

Your vehicle is equipped with the memory fuse to prevent battery discharge if your vehicle is parked without being operated for prolonged periods. Use the following procedures before parking the vehicle for prolonged periods.

1. Turn off the engine.
2. Turn off the headlights and tail lights.
3. Open the driver's side panel cover and pull up the memory fuse.

If the memory fuse is pulled up from the fuse panel, the warning chime, audio, clock and interior lamps, etc., will not operate. Some items must be reset after replacement. Refer to "Battery" in this section.

Even though the memory fuse is pulled up, the battery can still be discharged by operation of the headlights or other electrical devices.

Engine compartment fuse replacement

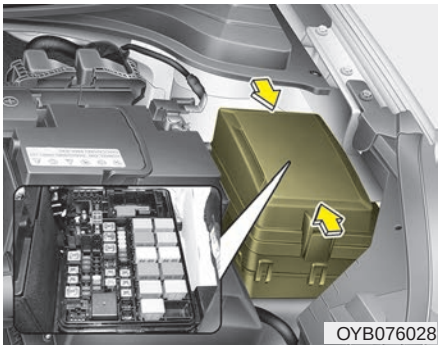

1. Turn the ignition switch and all other switches off.
2. Remove the fuse panel cover by pressing the tab and pulling the cover up. When the blade type fuse is disconnected, remove it by using the clip designed for changing fuses located in the engine compartment fuse box. Upon removal, securely insert reserve fuse of the same rating.
3. Check the removed fuse; replace it if it is blown. To remove or insert the fuse, use the fuse puller in the engine compartment fuse panel.
4. Push in a new fuse of the same rating, and make sure it fits tightly in the clips. If it fits loosely, consult an authorized Kia dealer.

⚠ CAUTION

After checking the fuse panel in the engine compartment, securely install the fuse panel cover through the audible clicking sound.

If not, electrical failures may occur from water contact.

Multi fuse

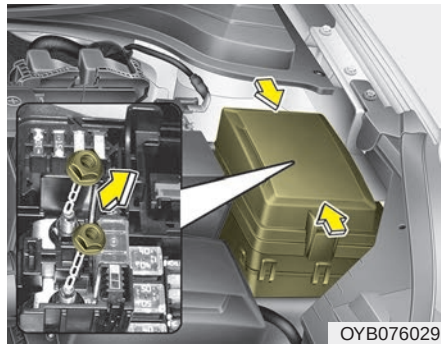

If the multi fuse is blown, it must be removed as follows:

1. Turn off the engine.
2. Disconnect the negative battery cable.
3. Remove the nuts shown in the picture above.
4. Replace the fuse with a new one of the same rating.
5. Reverse these steps to reinstall the multi fuse.

⚠ CAUTION

Do not disassemble nor assemble the multi fuse when it is secured with nuts and bolts. Incorrect or partial assembly torque may cause a fire. Have the vehicle checked by an authorized Kia dealer.

⚠ CAUTION

Visually inspect the battery cap to ensure it is securely closed. If the battery cap is not securely closed, moisture may enter the system and damage the electrical components.

⚠ CAUTION - Random wiring prohibited when retrofitting equipment

Use of random wiring in the vehicle might cause danger due to failure and damage of the vehicle's performance.

Using random wires especially when retrofitting AVN or theft alarm system, remote engine control, car phone or radio might damage the vehicle or cause fire.

⚠ CAUTION - Remodeling Prohibited

Do not try remodeling the vehicle in any way. It is illegal, and may affect the vehicle's performance, durability, and safety. The manufacturer's warranty does not cover any problems caused by remodeling. Remodeling the vehicle can cause malfunction of the vehicle, wiring damage, battery discharge, connector damage, or fire.

✻ NOTICE - Window tinting precaution

Window tint(especially metallic film) might cause communication disorder or poor radio reception, and malfunction of the automatic lighting system due to excessive change of illumination inside the vehicle. The solution used might also flow into electric, electronic devices causing disorder and failure.

Fuse/relay panel description

Driver's side fuse panel

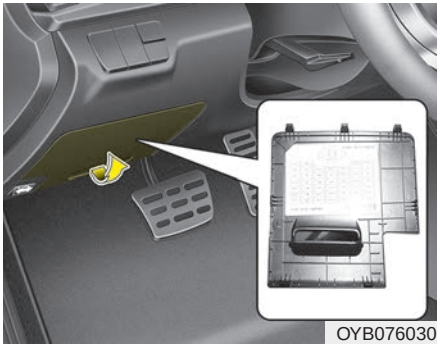

OYB076030

Inside the fuse/relay panel covers, you can find the fuse/relay label describing fuse/relay name and capacity.

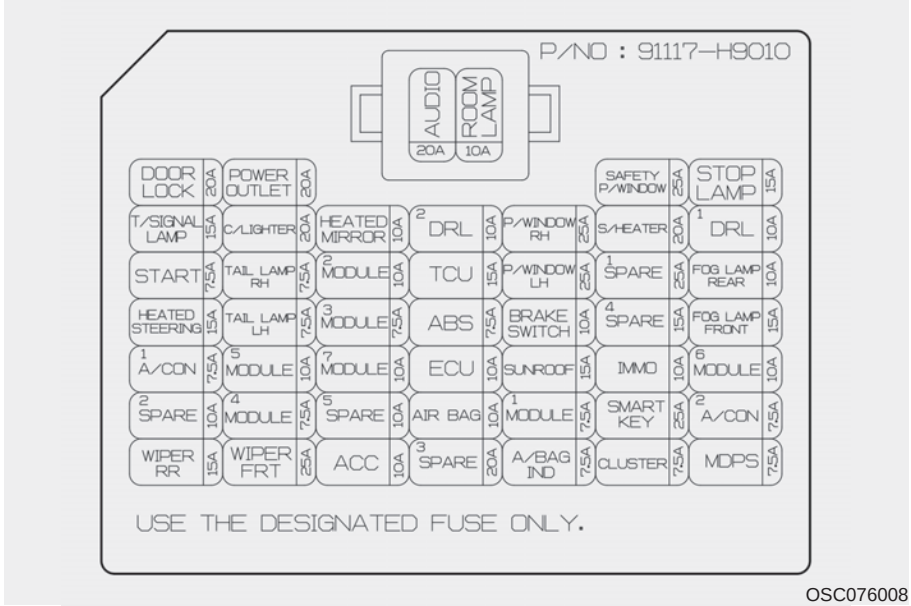

OSC076008

✻ NOTICE

Not all fuse panel descriptions in this manual may be applicable to your vehicle. It is accurate at the time of printing. When you inspect the fuse panel in your vehicle, refer to the fuse panel label.

Instrument panel (Driver's side fuse panel)

Fuse Name	Fuse rating	Circuit Protected
DOOR LOCK	20A	Tail Gate Unlock Relay, Door Lock/Unlock Relay, Two Turn Unlock Relay
POWER OUTLET	20A	Power Outlet
SAFETY P/WINDOW	25A	Driver Safety Power Window Module
STOP LAMP	15A	Stop Signal Electronic Module
T/SIGNAL LAMP	15A	BCM (Body Control Module), SLM (Seat Belt & Lighting Module)
C/LIGHTER	20A	Cigarette Lighter
HEATED MIRROR	10A	Driver Power Outside Mirror, Passenger Power Outside Mirror, Air Conditioner Control Module, ECM (Engine Control Module)/PCM (Power train Control Module)
DRL2	10A	BCM (Body Control Module)
P/WINDOW RH	25A	Power Window Main Switch, Passenger Power Window Switch
S/HEATER	20A	Front Seat Warmer Control Module
DRL1	10A	-
START	7.5A	With Immobilizer : ECM (Engine Control Module)/PCM (Power train Control Module), Engine Room Junction Block(Start Relay), Smart Key Control Module Without Immobilizer : Burglar Alarm Relay
TAIL LAMP RH	7.5A	Head Lamp Right Handle side, Rear Combination Lamp (OUT) Right Handle side, License Lamp Right Handle side, Rear Combination Lamp (IN) Right Handle side, Illumination (+)
MODULE2	10A	Forward Collision-Avoidance Assist (FCA) Unit, Crash Pad Switch

Fuse Name	Fuse rating	Circuit Protected
TCU	15A	Engine Room Junction Block(Back-Up Lamp Switch), Automatic Transmission Shift Lever, Transmission Range Switch, Stop Lamp Switch
P/WINDOW LH	25A	Power Window Main Switch
SPARE1	25A	Spare
FOG LAMP REAR	10A	-
HEATED STEERING	15A	Steering Wheel Heated
TAIL LAMP LH	7.5A	Head Lamp Left Handle side, License Lamp Left Handle side, Rear Combination Lamp (OUT) Left Handle side, Rear Combination Lamp (IN) Left Handle side, Glove Box Lamp
MODULE3	7.5A	Front Seat Warmer Control Module, Audio, Electro Chromic Mirror, Air Conditioner Control Module, Audio/Video & Navigation Head Unit, Clock Spring, Auto Transmission Shift Lever Indicator
ABS	7.5A	Engine Room Junction Block(Multipurpose Check Connector), ESC (Electronic Stability Control) Module
BRAKE SWITCH	10A	Smart Key Control Module, Stop Lamp Switch
SPARE4	15A	Spare
FOG LAMP FRONT	15A	Front Fog Lamp Relay
A/CON1	7.5A	Engine Room Junction Block(Blower Relay), Air Conditioner Control Module
MODULE5	10A	Engine Room Junction Block(Head Lamp Relay, Head Lamp Hi Relay), Rain Sensor, Sunroof Motor, Front Seat Warmer Control Module, Driver Safety Power Window Module
MODULE7	10A	TPMS (Tire Pressure Monitoring System) Unit
ECU	10A	ECM (Engine Control Module)/PCM (Power train Control Module), Immobilizer Module, Smart Key Control Module

Fuse Name	Fuse rating	Circuit Protected
SUNROOF	15A	Sunroof Motor
IMMO	10A	Immobilizer Module
MODULE6	10A	Key Solenoid, Center Facia Switch
SPARE2	10A	Spare
MODULE4	7.5A	SLM (Seat Belt & Lighting Module), BCM (Body Control Module), Smart Key Control Module
SPARE5	10A	Spare
AIR BAG	10A	ACU (Airbag Control Unit), Passenger Occupant Detection Sensor
MODULE1	7.5A	BCM (Body Control Module), SLM (Seat Belt & Lighting Module), Key Interlock
SMART KEY	25A	Smart Key Control Module
A/CON2	7.5A	-
WIPER RR	15A	Multifunction Switch, Rear Wiper Motor, Rear Wiper Relay
WIPER FRT	25A	Multifunction Switch, Front Wiper Motor, Engine Room Junction Block(Wiper Low Relay)
ACC	10A	Power Outlet Relay, BCM (Body Control Module), SLM (Seat Belt & Lighting Module), Audio, Key Interlock, Audio/Video & Navigation Head Unit, USB Charging Connector, Power Outside Mirror Switch, Smart Key Control Module

Fuse Name	Fuse rating	Circuit Protected
SPARE3	20A	Spare
A/BAG IND	7.5A	Instrument Cluster
CLUSTER	7.5A	Instrument Cluster
MDPS	7.5A	MDPS (Motor Driven Power Steering) Unit
AUDIO	20A	Audio, Audio/Video & Navigation Head Unit
ROOM LP	10A	Room Lamp Relay, Glove Box Lamp, Air Conditioner Control Module, SLM (Seat Belt & Lighting Module), BCM (Body Control Module), Auto Light & Photo Sensor, TPMS (Tire Pressure Monitoring System) Unit, Instrument Cluster, Data Link Connector, Room Lamp, Trunk Room Lamp

Engine compartment fuse panel

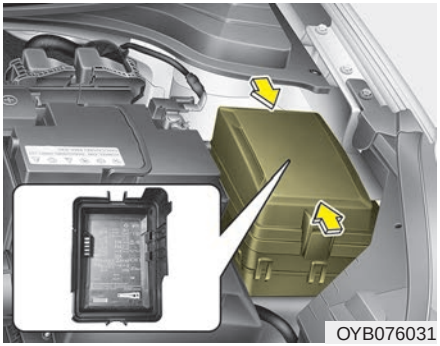

OYB076031

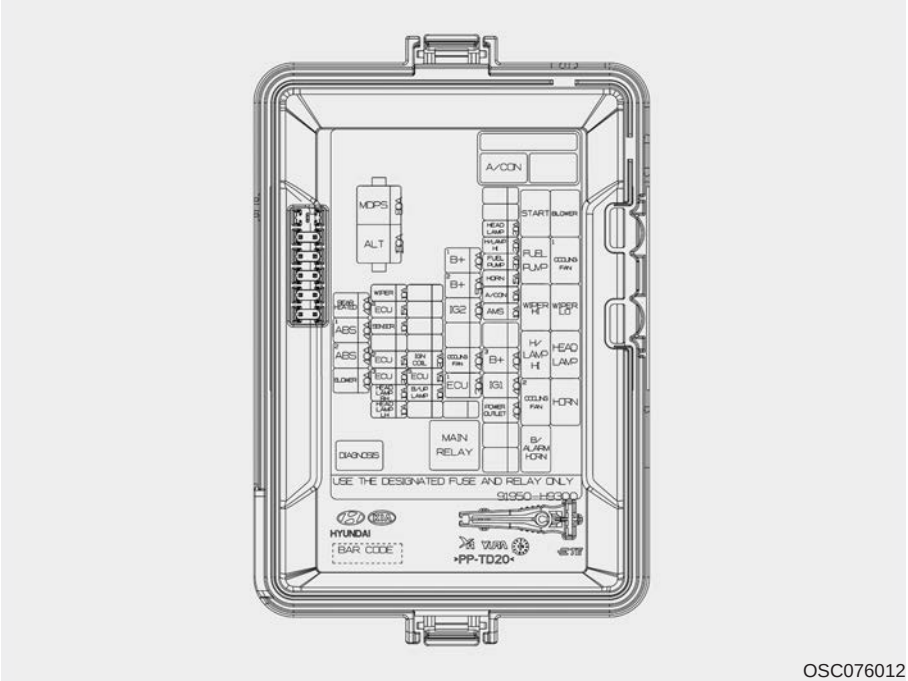

OSC076012

Engine room compartment fuse panel

Fuse Name	Fuse rating	Circuit Protected
MDPS	80A	MDPS (Motor Driven Power Steering) Unit
ALT	150A	Fuse - ABS1, BAS2, BLOWER, REAR HEATED
REAR HEATED	40A	Instrument Panel Junction Block (Rear Defogger Relay)
ABS1	40A	ESC (Electronic Stability Control) Module, Multipurpose Check Connector
ABS2	40A	ESC (Electronic Stability Control) Module
BLOWER	40A	Blower Relay
WIPER	10A	Front Wiper Motor, Multifunction Switch, Wiper Low Relay
ECU4	15A	ECM (Engine Control Module)/PCM (Power train Control Module)
SENSOR	10A	Oil Control Valve #1/#2, Cooling Fan1/2 Relay, Oxygen Sensor (Up), Oxygen Sensor (Down), Variable Intake Solenoid Valve, Air Conditioner Relay, Purge Control Solenoid Valve, Canister Close Valve
ECU2	15A	ECM (Engine Control Module)/PCM (Power train Control Module)
ECU3	20A	ECM (Engine Control Module)/PCM (Power train Control Module)
HEAD LAMP RH	10A	Head Lamp Right Handle side
HEAD LAMP LH	10A	Head Lamp Left Handle side
IGN COIL	20A	Ignition Coil #1~#4, Condenser
ECU5	15A	ECM (Engine Control Module)/PCM (Power train Control Module), Fuel Pump Relay

Fuse Name	Fuse rating	Circuit Protected
B/UP LAMP	10A	Back-Up Lamp Switch
B+1	40A	Instrument Panel Junction Block (Fuse - DRL2, FOGLAMP FRONT, STOP LAMP, MODULE6, Power Connector (AUDIO, ROOM LAMP))
B+2	50A	Instrument Panel Junction Block (Fuse - IMMO, SMART KEY, BRAKE SWITCH, SAFETY P/WINDOW, S/HEATER, SUNROOF, Power Window Relay)
IG2	40A	Ignition Switch, IG2 Relay, Start Relay
COOLING FAN	40A	Cooling Fan1/2 Relay
ECU1	30A	Fuse - ECU3, ECU4, Main Relay
HEAD LAMP	20A	Head Lamp Relay
H/LAMP HI	20A	With CANADA DRL : SLM(Seat Belt & Lighting Module) or BCM(Body Control Module) Without CANADA DRL : Head Lamp HI Relay
FUEL PUMP	20A	Fuel Pump Relay
HORN	15A	Horn Relay/ Burglar Alarm Horn Relay
A/CON	10A	Air Conditioner Relay
AMS	10A	Battery Sensor
B+3	40A	Instrument Panel Junction Block (Fuse - T/SIGNAL LAMP, DOOR LOCK, Tail Lamp Relay)
IG1	40A	Ignition Switch, IG1 Relay, ACC Relay
POWER OUTLET	40A	Instrument Panel Junction Block (Power Outlet Relay)

Relay

Relay Name	Type
Main Relay	MINI
Start Relay	MICRO
Fuel Pump Relay	MICRO
Wiper HI Relay	MICRO
H/Lamp HI Relay	MICRO
Cooling Fan2 Relay	MICRO
B/Alarm Horn Relay	MICRO
Blower Relay	MICRO
Cooling Fan1 Relay	MICRO
Wiper LO Relay	MICRO
Head Lamp Relay	MICRO
Horn Relay	MICRO
A/Con Relay	MICRO

LIGHT BULBS

Bulb replacement precaution

Please keep extra bulbs on hand with appropriate wattage ratings in case of emergencies.

Refer to “Bulb Wattage” in chapter 9.

When changing lamps, first turn off the engine at a safe place, firmly apply the parking brake and detach the battery’s negative (-) terminal.

⚠ WARNING - Working on the lights

Prior to working on the light, firmly apply the parking brake, ensure that the ignition switch is turned to the LOCK position and turn off the lights to avoid sudden movement of the vehicle and burning your fingers or receiving an electric shock.

Use only bulbs of the specified wattage.

⚠ CAUTION - Light replacement

Be sure to replace the burned-out bulb with one of the same wattage rating. Otherwise, it may cause damage to the fuse or electric wiring system.

⚠ CAUTION - Headlamp Lens

To prevent damage, do not clean the headlamp lens with chemical solvents or strong detergents.

- **Lamp part malfunction due to net-work failure**

The headlamp, taillight, and fog light may light up when the head lamp switch is turned ON, and not light up when the taillight or for light switch is turned ON. This may be cause by network failure or vehicle electrical control system malfunction. If there is a problem, we recommend the system be serviced by an authorized Kia dealer.

- **Lamp part malfunction due to electrical control system stabilization**

A normally functioning lamp may flicker momentarily. This momentary occurrence is due to stabilization function of the vehicle's electrical on control system. If the lamp soon returns to normal, the vehicle does not require service.

However, if the lamp goes out after the momentary flickering, or the flickering continues, we recommend the system be serviced by an authorized Kia dealer.

✻ NOTICE

- **If the light bulb or lamp connector is removed while the lamp is still on, the fuse box's electronic system may log it as a malfunction. Therefore, a lamp malfunction incident may be recorded as a Diagnostic Trouble Code (DTC) in the fuse box.**
- **It is normal for an operating lamp to flicker momentarily. This is due to a stabilization function of the vehicle's electronic control device. If the lamp lights up normally after momentarily blinking, then it is functioning as normal. However, if the lamp continues to flicker several times or turns off completely, there may be an error in the vehicle's electronic control device. Please have the vehicle checked by an authorized Kia dealer immediately.**

✻ NOTICE

We recommend that the headlight aiming be adjusted after an accident or after the headlight assembly is reinstalled at an authorized Kia dealer.

✻ NOTICE

After driving in heavy rain or washing, headlamp and taillamp lenses could appear frosty. This condition is caused by the temperature difference between the lamp inside and outside. This is similar to the condensation on your windows inside your vehicle during the rain and doesn't indicate a problem with your vehicle. If the water leaks into the lamp bulb circuitry, we recommend that you have the vehicle checked by an authorized Kia dealer.

If you don't have the necessary tools, the correct bulbs and the expertise, consult an authorized Kia dealer. In many cases, it is difficult to replace vehicle light bulbs because other parts of the vehicle must be removed before you can get to the bulb. This is especially true if you have to remove the headlamp assembly to get to the bulb(s).

Removing/installing the headlamp assembly can result in damage to the vehicle.

If non-genuine parts or substandard bulbs are used, it may lead to blowing a fuse or other wiring damages.

Do not install extra lamps or LEDs to the vehicle. If additional lights are installed, it may lead to lamp malfunctions and flickering. Additionally, the fuse box and other writing may be damaged.

Light bulb position (Front)

■ Head lamp - Type A

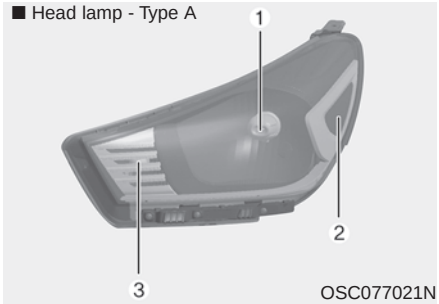

OSC077021N

■ Head lamp - Type B

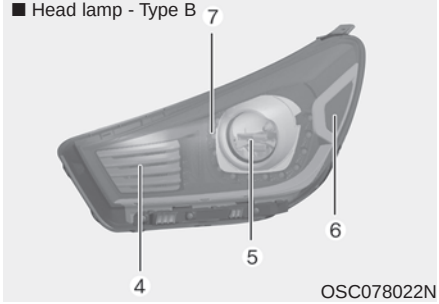

OSC078022N

■ Fog lamp - Type A

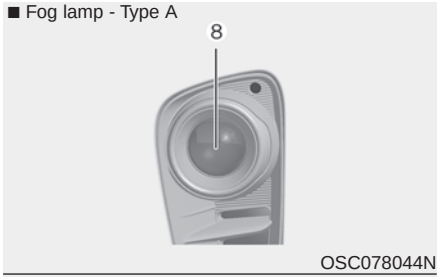

OSC078044N

■ D.R.L. Lamp - Type A

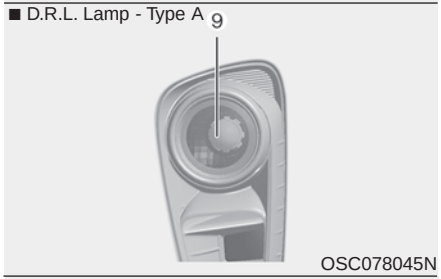

OSC078045N

■ D.R.L. Lamp - Type B

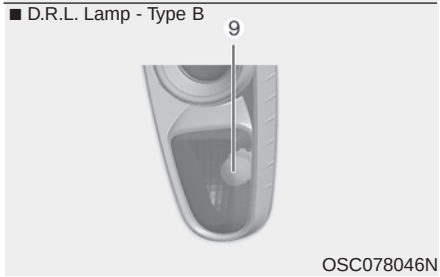

OSC078046N

(1) Headlamp (Low/High) (Bulb type)
(2) Side marker (Bulb type)
(3) Front turn signal lamp/ Position lamp
(4) Front turn signal lamp (Bulb type)
(5) Headlamp (Low/High) (Bulb/LED type)
(6) Side marker (LED type)
(7) Position lamp (LED type) or Position lamp/Day time running lamp (LED type)
(8) Fog lamp (Bulb type)
(9) Day time running lamp (Bulb type)

Light bulb position (Rear) (5 Door)

■ Rear combination lamp (5 Door) - Type A

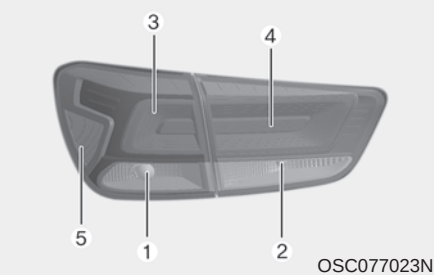

OSC077023N

■ License plate lamp (5 Door)

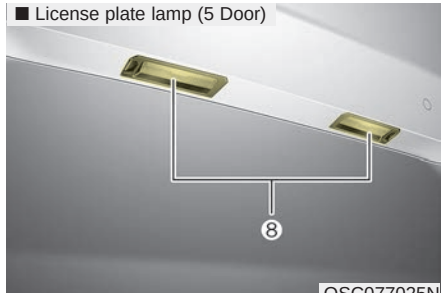

OSC077025N

■ Rear combination lamp (5 Door) - Type B

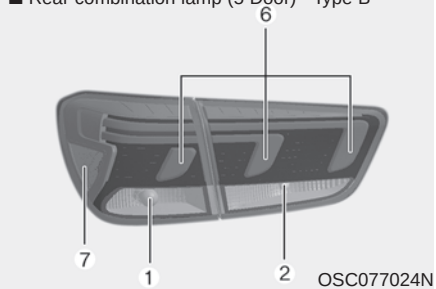

OSC077024N

■ High mounted stop lamp (5 Door)

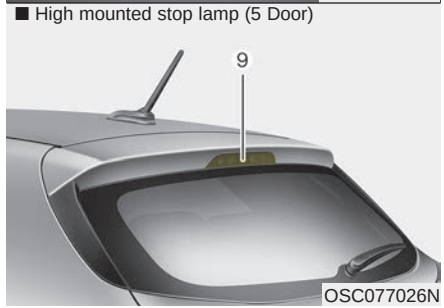

OSC077026N

(1) Rear turn signal lamp (Bulb type)
(2) Back up lamp (Bulb type)
(3) Stop and tail lamp (Bulb type)
(4) Tail lamp (Bulb type)
(5) Side marker (Bulb type)
(6) Stop and tail lamp (LED type)
(7) Side marker (LED type)
(8) License plate lamp
(9) High mounted stop lamp

Light bulb position (Rear) (4 Door)

■ Rear combination lamp (4 Door) - Type A

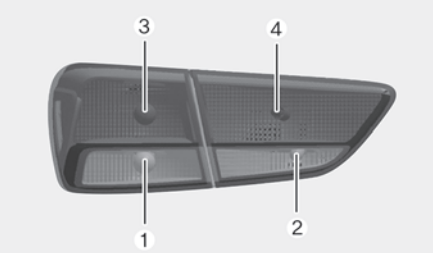

OSC077027N

■ License plate lamp (4 Door)

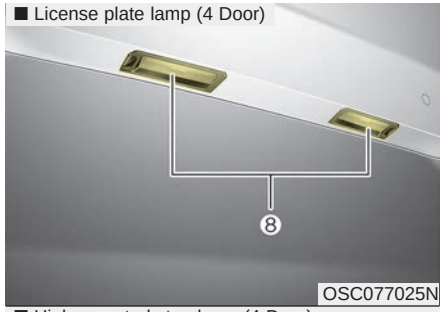

OSC077025N

■ Rear combination lamp (4 Door) - Type B

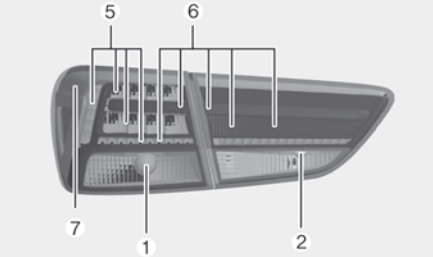

OSC077028N

■ High mounted stop lamp (4 Door)

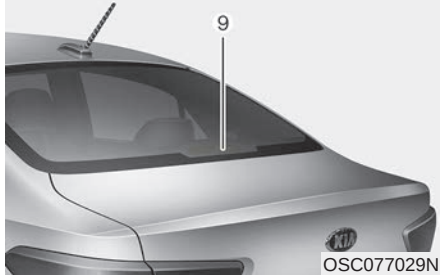

OSC077029N

(1) Rear turn signal lamp (Bulb type)
(2) Back up lamp (Bulb type)
(3) Stop and tail lamp/Side marker (Bulb type)
(4) Tail lamp (Bulb type)
(5) Stop lamp (LED type)
(6) Tail lamp (LED type)
(7) Side marker (LED type)
(8) License plate lamp
(9) High mounted stop lamp

Light bulb position (Side)

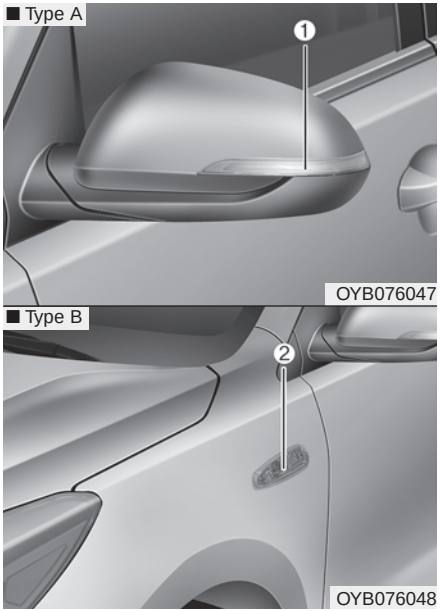

(1) Side repeater lamp (LED type)
(2) Side repeater lamp (bulb type)

Headlamp (Low/High beam) (Bulb type) bulb replacement (Headlamp Type A)

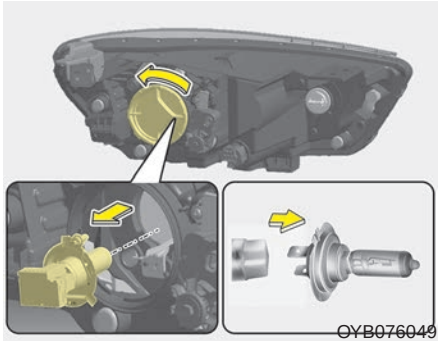

1. Open the hood.
2. Remove the headlamp bulb cover by turning it counterclockwise.
3. Disconnect the headlamp bulb socket-connector.
4. Unsnap the headlamp bulb retaining wire by pressing the end and pushing it upward.
5. Remove the bulb from the head lamp assembly.
6. Install a new headlamp bulb and snap the headlamp bulb retaining wire into position by aligning the wire with the groove on the bulb.
7. Connect the headlamp bulb socket-connector.
8. Install the headlamp bulb cover by turning it clockwise.

Headlamp bulb

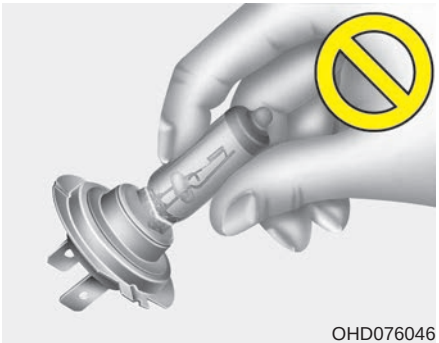
OHD076046

⚠ WARNING - Halogen bulbs

Handle halogen bulbs with care.

- **Halogen bulbs contain pressurized gas that will produce flying pieces of glass if broken.**

(Continued)

(Continued)

- **Always handle them carefully, and avoid scratches and abrasions. If the bulbs are lit, avoid contact with liquids. Never touch the glass with bare hands. Residual oil may cause the bulb to overheat and burst when lit. A bulb should be operated only when installed in a headlamp.**
- **If a bulb becomes damaged or cracked, replace it immediately and carefully dispose of it.**
- **Wear eye protection when changing a bulb. Allow the bulb to cool down before handling it.**

Side marker (front) (Bulb type) bulb replacement (Headlamp Type A)

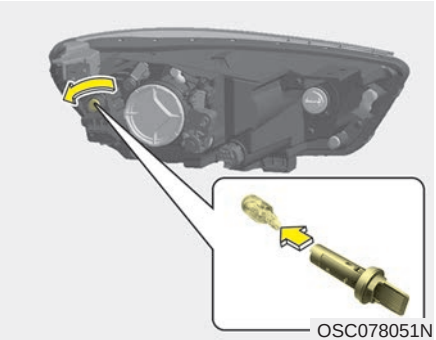
OSC078051N

1. Open the hood.
2. Remove the bulb-socket from the headlamp assembly by turning the bulb-socket counterclockwise until the tabs on the bulb-socket align with the slots on the headlamp assembly.
3. Remove the bulb from the bulb-socket by pulling it out.

4. Insert a new bulb by inserting it into the bulb-socket.
5. Install the socket in the headlamp assembly by aligning the tabs on the bulb-socket with the slots in the assembly. Push the bulb-socket into the headlamp assembly and turn the socket clockwise.

Front turn signal lamp bulb replacement (Headlamp Type A)

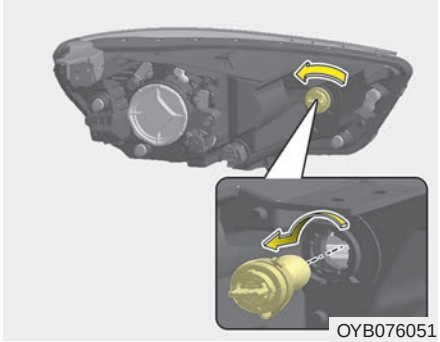

1. Open the hood.
2. Remove the bulb-socket from the headlamp assembly by turning the bulb-socket counterclockwise until the tabs on the bulb-socket align with the slots on the headlamp assembly.
3. Remove the bulb from the bulb-socket by pressing it in and rotating it counterclockwise until the tabs on the bulb align with the slots in the bulb-socket. Pull the bulb out of the bulb-socket
4. Insert a new bulb by inserting it into the bulb-socket and rotating it until it locks into place.
5. Install the socket in the headlamp assembly by aligning the tabs on the bulb-socket with the slots in the assembly. Push the bulb-socket into the headlamp assembly and turn the socket clockwise.

Headlamp (Low/High beam) (Bulb type) bulb replacement (Headlamp Type B)

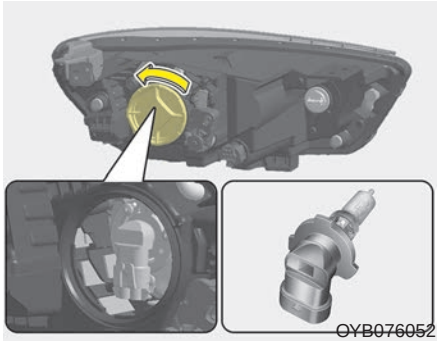

1. Open the hood.
2. Remove the headlamp bulb cover by turning it counterclockwise.
3. Disconnect the headlamp bulb socket-connector.
4. Remove the bulb-socket from the headlamp assembly by turning the bulb-socket counterclockwise until the tabs on the bulb-socket align with the slots on the headlamp assembly.
5. Install a new bulb-socket assembly in the headlamp assembly by aligning the tabs on the bulb-socket with the slots in the headlamp assembly. Push the bulb-socket into the headlamp assembly and turn the bulb-socket clockwise.
6. Install the headlamp bulb cover by turning it clockwise.

Headlamp bulb

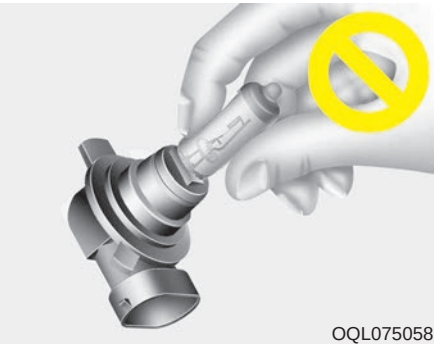

⚠ WARNING - Halogen bulbs

Handle halogen bulbs with care.

- **Halogen bulbs contain pressurized gas that will produce flying pieces of glass if broken.**

(Continued)

(Continued)

- **Always handle them carefully, and avoid scratches and abrasions. If the bulbs are lit, avoid contact with liquids. Never touch the glass with bare hands. Residual oil may cause the bulb to overheat and burst when lit. A bulb should be operated only when installed in a headlamp.**
- **If a bulb becomes damaged or cracked, replace it immediately and carefully dispose of it.**
- **Wear eye protection when changing a bulb. Allow the bulb to cool down before handling it.**

Headlamp (Low/High beam) (LED type) bulb replacement (Headlamp Type B)

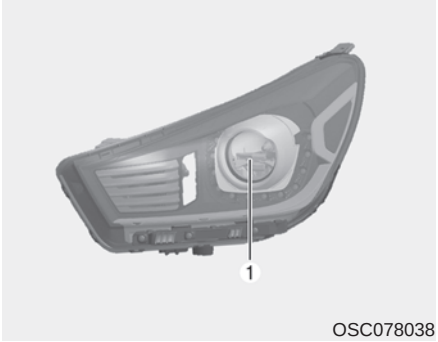

If the headlamp (Low/High beam) (1) does not operate, have the vehicle checked by an authorized Kia dealer.

Front turn signal lamp bulb replacement (Headlamp Type B)

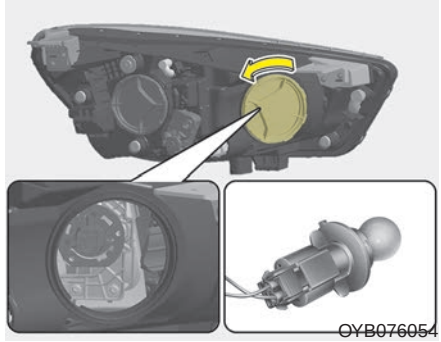

1. Open the hood.
2. Remove the headlamp bulb cover by turning it counterclockwise.
3. Remove the bulb-socket from the headlamp assembly by turning the bulb-socket counterclockwise until the tabs on the bulb-socket align with the slots on the headlamp assembly.

4. Remove the bulb from the bulb socket by pressing it in and rotating it counterclockwise until the tabs on the bulb align with the slots in the bulb-socket. Pull the bulb out of the bulb-socket
5. Insert a new bulb by inserting it into the bulb-socket and rotating it until it locks into place.
6. Install the socket in the headlamp assembly by aligning the tabs on the bulb-socket with the slots in the assembly. Push the bulb-sock et into the headlamp assembly and turn the socket clockwise.
7. Install the headlamp bulb cover by turning it clockwise.

Side marker (front) (LED type) bulb replacement (Headlamp Type B)

OSC078053N

If the Side marker (LED) (1) does not operate, have the vehicle checked by an authorized Kia dealer.

The LED lamps cannot be replaced as a single component because it is part of an integrated unit. The LED lamps have to be replaced with the unit.

A skilled technician should check or repair the Side marker (LED), for it may damage related parts of the vehicle.

Front fog lamp bulb replacement

OYB076055

If the front fog lamp (1) does not operate, have the vehicle checked by an authorized Kia dealer.

A skilled technician should check or repair the front fog lamp, for it may damage related parts of the vehicle.

Position lamp + DRL (LED type) bulb replacement

OSC077037N

If the position lamp + DRL (LED) (1) does not operate, have the vehicle checked by an authorized Kia dealer.

The LED lamps cannot be replaced as a single component because it is part of an integrated unit. The LED lamps have to be replaced with the unit.

A skilled technician should check or repair the position lamp + DRL (LED), for it may damage related parts of the vehicle.

Daytime running lamp (Bulb type) bulb replacement

■ Type A

OYB076057

■ Type B

OYB076058

If the DRL (1) does not operate, have the vehicle checked by an authorized Kia dealer.

A skilled technician should check or repair the DRL bulb, for it may damage related parts of the vehicle.

Side repeater lamp (LED type) bulb Replacement

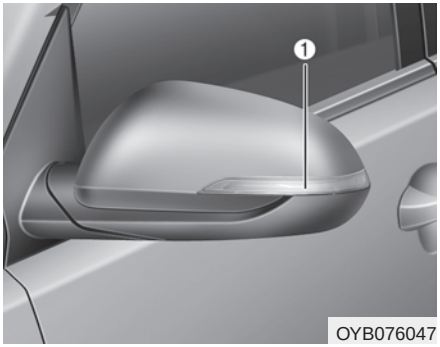

OYB076047

If the side repeater lamp (LED) (1) does not operate, have the vehicle checked by an authorized Kia dealer.

The LED lamps cannot be replaced as a single component because it is part of an integrated unit. The LED lamps have to be replaced with the unit.

A skilled technician should check or repair the side repeater lamp (LED), for it may damage related parts of the vehicle.

Side repeater lamp (bulb type) bulb Replacement

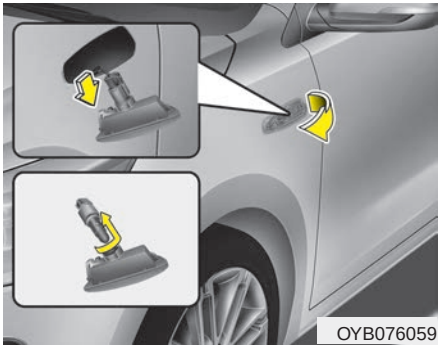
OYB076059

1. Remove the lamp assembly from the vehicle by prying the lens and pulling the assembly out.
2. Disconnect the bulb electrical connector.
3. Separate the socket and the lens parts by turning the socket counterclockwise until the tabs on the socket align with the slots on the lens part.
4. Remove the bulb by pulling it straight out.
5. Insert a new bulb in the socket.
6. Reassemble the socket and the lens part.
7. Connect the bulb electrical connector.
8. Reinstall the lamp assembly to the body of the vehicle.

Stop and tail lamp bulb replacement (for 5 door)

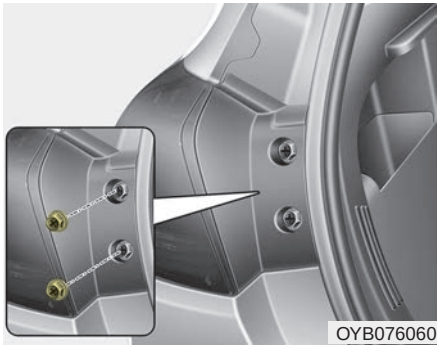
OYB076060

1. Open the trunk lid.
2. Loosen the light assembly retaining screws with a cross-tip screwdriver.

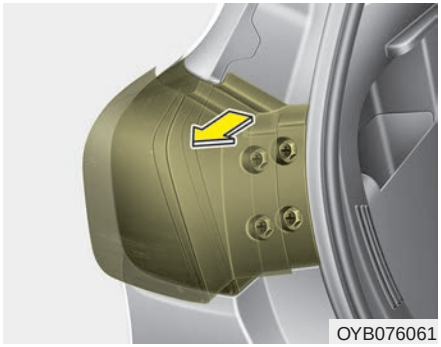
OYB076061

3. Remove the rear combination lamp assembly from the body of the vehicle.
4. Disconnect the rear combination lamp connector.

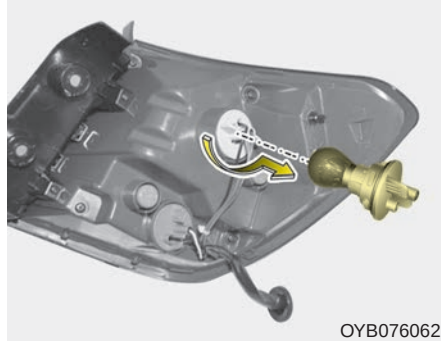
OYB076062

5. Remove the socket from the assembly by turning the socket counterclockwise until the tabs on the socket align with the slots on the assembly.
6. Remove the bulb from the socket by pressing it in and rotating it counterclockwise until the tabs on the bulb align with the slots in the socket. Pull the bulb out of the socket.
7. Insert a new bulb by inserting it into the socket and rotating it until it locks into place.

8. Install the socket in the assembly by aligning the tabs on the socket with the slots in the assembly. Push the socket into the assembly and turn the socket clockwise.
9. Install the rear combination lamp assembly to the body of the vehicle.

Rear turn signal lamp bulb replacement (for 5 door)

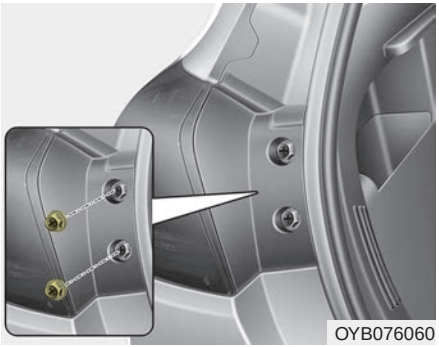
OYB076060

1. Open the trunk lid.
2. Loosen the light assembly retaining screws with a cross-tip screwdriver.

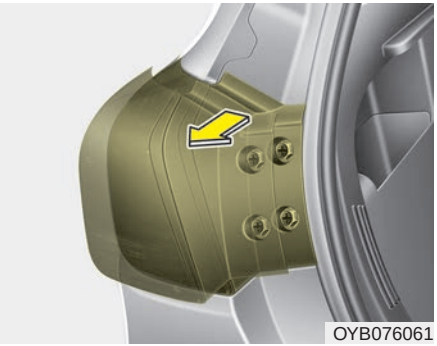
OYB076061

3. Remove the rear combination lamp assembly from the body of the vehicle.
4. Disconnect the rear combination lamp connector.

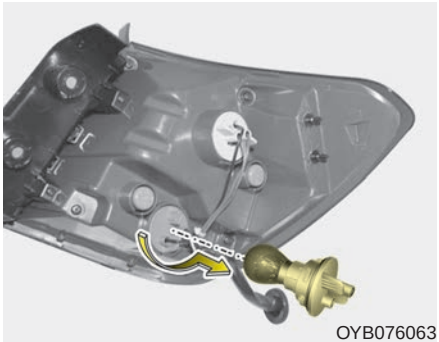
OYB076063

5. Remove the socket from the assembly by turning the socket counterclockwise until the tabs on the socket align with the slots on the assembly.
6. Remove the bulb from the socket by pressing it in and rotating it counterclockwise until the tabs on the bulb align with the slots in the socket. Pull the bulb out of the socket.
7. Insert a new bulb by inserting it into the socket and rotating it until it locks into place.
8. Install the socket in the assembly by aligning the tabs on the socket with the slots in the assembly. Push the socket into the assembly and turn the socket clockwise.
9. Install the rear combination lamp assembly to the body of the vehicle.

Stop and tail lamp (LED type) bulb replacement (for 5 door)

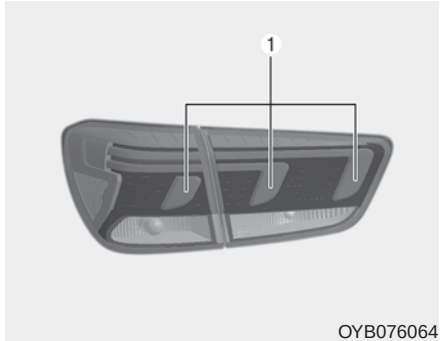

OYB076064

If the stop and tail lamp (LED) (1) does not operate, have the vehicle checked by an authorized Kia dealer.

The LED lamps cannot be replaced as a single component because it is part of an integrated unit. The LED lamps have to be replaced with the unit.

A skilled technician should check or repair the stop and tail lamp (LED), for it may damage related parts of the vehicle.

Back-up lamp bulb replacement (for 5 door)

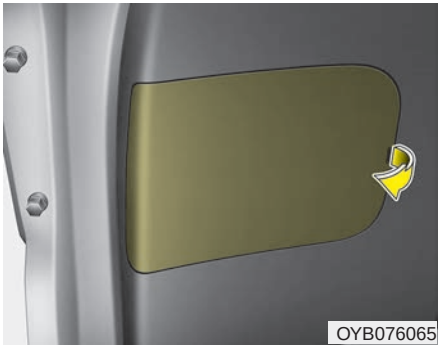

1. Open the tailgate.
2. Remove the service cover.

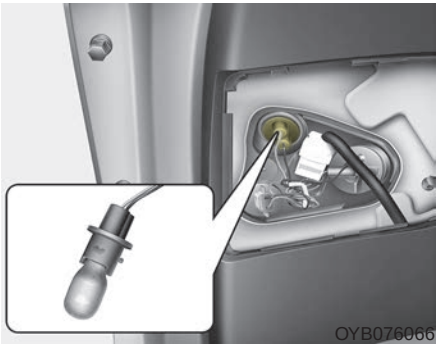

3. Remove the socket from the assembly by turning the socket counterclockwise until the tabs on the socket align with the slots on the assembly.
4. Remove the bulb from bulb-socket by pulling it out.
5. Insert a new bulb by inserting it into the bulb-socket.
6. Install the socket in the assembly by aligning the tabs on the socket with the slots in the assembly. Push the socket into the assembly and turn the socket clockwise.
7. Install the service cover by putting it into the service hole.

Tail lamp (inside) bulb replacement (for 5 door)

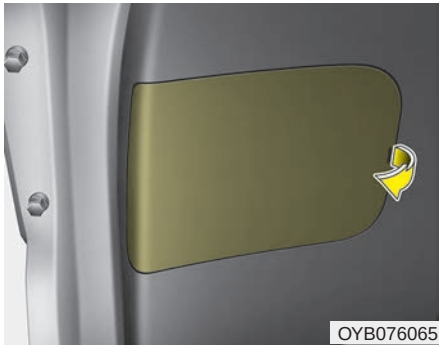

1. Open the tailgate.
2. Remove the service cover.

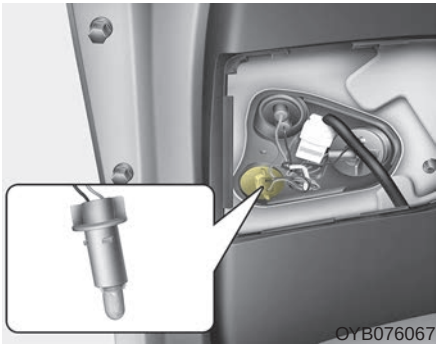

3. Remove the socket from the assembly by turning the socket counterclockwise until the tabs on the socket align with the slots on the assembly.
4. Remove the bulb from bulb-socket by pulling it out.
5. Insert a new bulb by inserting it into the bulb-socket.
6. Install the socket in the assembly by aligning the tabs on the socket with the slots in the assembly. Push the socket into the assembly and turn the socket clockwise.
7. Install the service cover by putting it into the service hole.

Side marker (rear) (Bulb type) bulb replacement (Rear combination lamp Type A) (for 5 door)

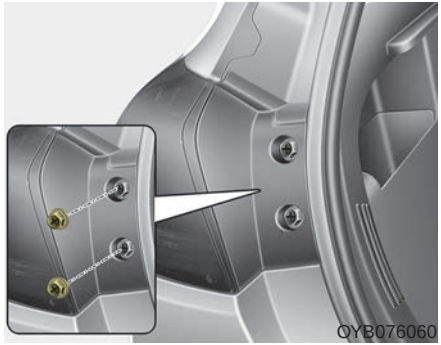

1. Open the liftgate.
2. Remove the service cover.
3. Loosen the light assembly retaining screws with a cross-tip screwdriver.

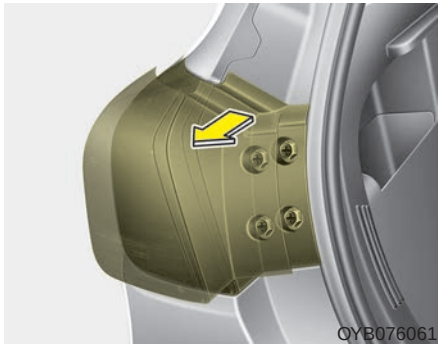

4. Remove the rear combination lamp assembly from the body of the vehicle.
5. Disconnect the rear combination lamp connector.

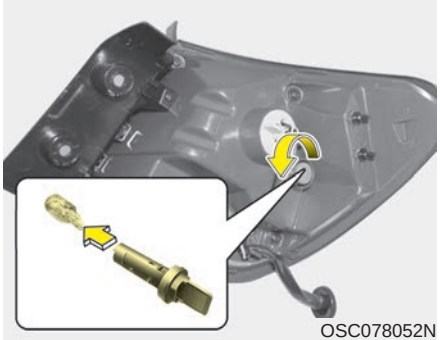
OSC078052N

6. Remove the socket from the assembly by turning the socket counterclockwise until the tabs on the socket align with the slots on the assembly.
7. Remove the bulb from bulb-socket by pulling it out.
8. Insert a new bulb by inserting it into the bulb-socket.
9. Install the socket in the assembly by aligning the tabs on the socket with the slots in the assembly. Push the socket into the assembly and turn the socket clockwise.
10. Connect the rear combination lamp connector.
11. Install the rear combination lamp assembly to the body of the vehicle.
12. Install the service cover.

Side marker (rear) (LED type) bulb replacement (Rear combination lamp Type B) (for 5 door)

OSC078024N

If the Side marker (LED) (1) does not operate, have the vehicle checked by an authorized Kia dealer.

The LED lamps cannot be replaced as a single component because it is part of an integrated unit. The LED lamps have to be replaced with the unit.

A skilled technician should check or repair the Side marker (LED), for it may damage related parts of the vehicle.

High mounted stop lamp bulb replacement (for 5 door)

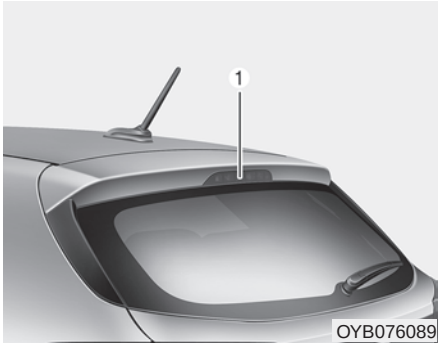

If the high mounted stop lamp (1) does not operate, have the vehicle checked by an authorized Kia dealer.

A skilled technician should check or repair the high mounted stop lamp, for it may damage related parts of the vehicle.

License plate lamp bulb replacement

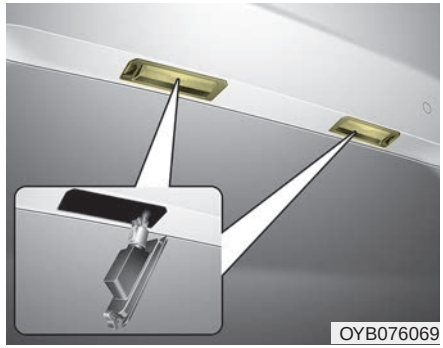

1. Using a flat-blade screwdriver, gently pry the lens cover from lamp housing.
2. Remove the socket from the assembly by turning the socket counterclockwise until the tabs on the socket align with the slots on the assembly.
3. Remove the bulb from bulb-socket by pulling it out.
4. Insert a new bulb by inserting it into the bulb-socket.
5. Install the socket in the assembly by aligning the tabs on the socket with the slots in the assembly. Push the socket into the assembly and turn the socket clockwise.
6. Align the lens cover tabs with the lamp housing notches and snap the lens into place.

Rear turn signal lamp bulb replacement (for 4 door)

OSC077030N

1. Open the trunk lid.
2. Remove the service cover by pulling out the service cover.

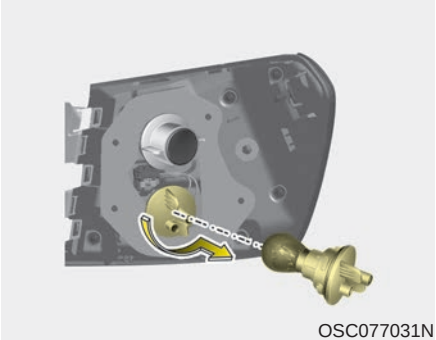
OSC077031N

3. Remove the socket from the assembly by turning the socket counterclockwise until the tabs on the socket align with the slots on the assembly.
4. Remove the bulb from the socket by pressing it in and rotating it counterclockwise until the tabs on the bulb align with the slots in the socket. Pull the bulb out of the socket.
5. Insert a new bulb by inserting it into the socket and rotating it until it locks into place.
6. Install the socket in the assembly by aligning the tabs on the socket with the slots in the assembly. Push the socket into the assembly and turn the socket clockwise.
7. Install the service cover.

Stop and tail lamp / Side marker (Bulb type) replacement (for 4 door)

OSC077030N

1. Open the trunk lid.
2. Remove the service cover by pulling out the service cover.

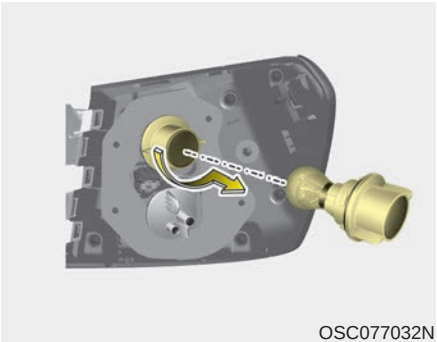
OSC077032N

3. Remove the socket from the assembly by turning the socket counterclockwise until the tabs on the socket align with the slots on the assembly.
4. Remove the bulb from the socket by pressing it in and rotating it counterclockwise until the tabs on the bulb align with the slots in the socket. Pull the bulb out of the socket.
5. Insert a new bulb by inserting it into the socket and rotating it until it locks into place.
6. Install the socket in the assembly by aligning the tabs on the socket with the slots in the assembly. Push the socket into the assembly and turn the socket clockwise.
7. Install the service cover.

Side marker (rear) (LED type) bulb replacement (Rear combination lamp Type B) (for 4 door)

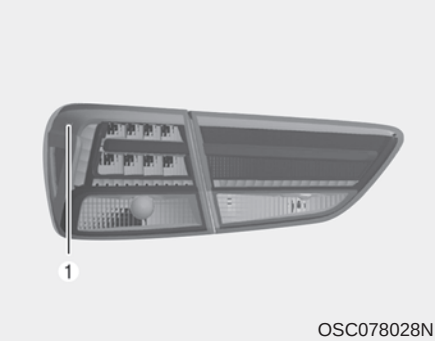

OSC078028N

If the Side marker (LED) (1) does not operate, have the vehicle checked by an authorized Kia dealer.

The LED lamps cannot be replaced as a single component because it is part of an integrated unit. The LED lamps have to be replaced with the unit.

A skilled technician should check or repair the Side marker (LED), for it may damage related parts of the vehicle.

Back-up lamp bulb replacement (for 4 door)

OSC077034N

1. Open the trunk lid.
2. Loosen the retaining screw of the trunk lid cover and then remove the cover.

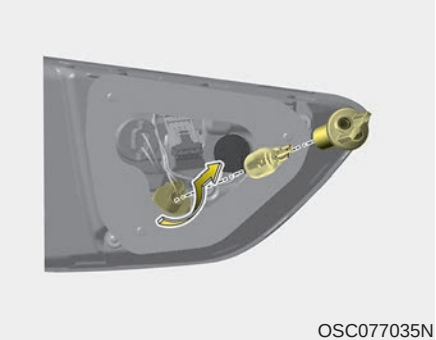
OSC077035N

3. Remove the socket from the assembly by turning the socket counterclockwise until the tabs on the socket align with the slots on the assembly.
4. Remove the bulb from bulb-socket by pulling it out.
5. Insert a new bulb by inserting it into the bulb-socket.
6. Install the socket in the assembly by aligning the tabs on the socket with the slots in the assembly. Push the socket into the assembly and turn the socket clockwise.
7. Install the trunk lid cover.

Tail lamp (Bulb type) bulb replacement (for 4 door)

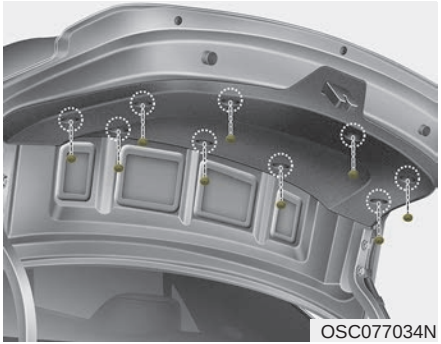
OSC077034N

1. Open the trunk lid.
2. Loosen the retaining screw of the trunk lid cover and then remove the cover.

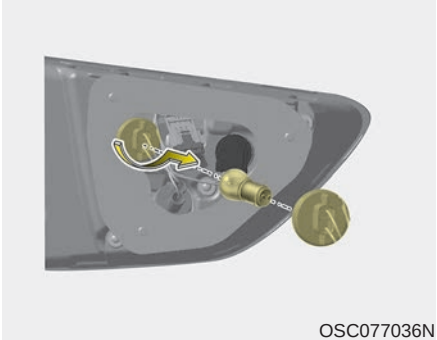
OSC077036N

3. Remove the socket from the assembly by turning the socket counterclockwise until the tabs on the socket align with the slots on the assembly.
4. Remove the bulb from the socket by pressing it in and rotating it counterclockwise until the tabs on the bulb align with the slots in the socket. Pull the bulb out of the socket.
5. Insert a new bulb by inserting it into the socket and rotating it until it locks into place.
6. Install the socket in the assembly by aligning the tabs on the socket with the slots in the assembly. Push the socket into the assembly and turn the socket clockwise.
7. Install the trunk lid cover.

Stop and tail lamp (LED type) bulb replacement (for 4 door)

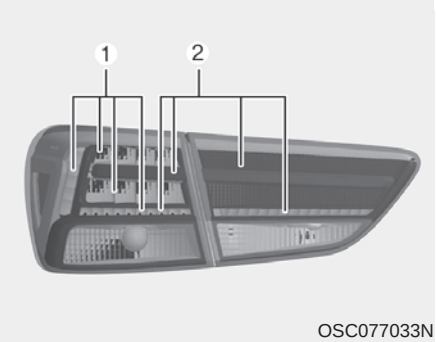

OSC077033N

If the stop and tail lamp (LED) (1,2) does not operate, have the vehicle checked by an authorized Kia dealer.

The LED lamps cannot be replaced as a single component because it is part of an integrated unit. The LED lamps have to be replaced with the unit.

A skilled technician should check or repair the stop and tail lamp (LED), for it may damage related parts of the vehicle.

High mounted stop lamp bulb replacement (for 4 door)

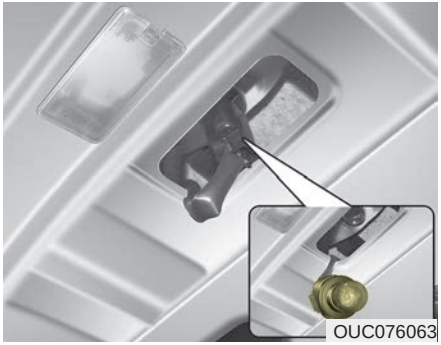
OUC076063

1. Open the trunk lid.
2. Remove the socket from the housing by turning the socket counter-clockwise until the tabs on the socket align with the slots on the housing.
3. Remove the bulb from bulb-socket by pulling it out.
4. Insert a new bulb by inserting it into the bulb-socket.
5. Install the socket in the housing by aligning the tabs on the socket with the slots in the housing. Push the socket into the housing and turn the socket clockwise.

Trunk lamp bulb replacement (for 4 door)

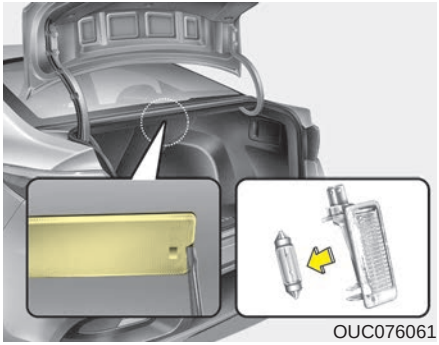
OUC076061

1. Using a flat-blade screwdriver, gently pry the lens cover from lamp housing.
2. Remove the bulb by pulling it straight out.
3. Install a new bulb in the socket.
4. Align the lens cover tabs with the lamp housing notches and snap the lens into place.

⚠ CAUTION

Be careful not to dirty or damage the lens, lens tab, and plastic housings.

Map lamp bulb replacement

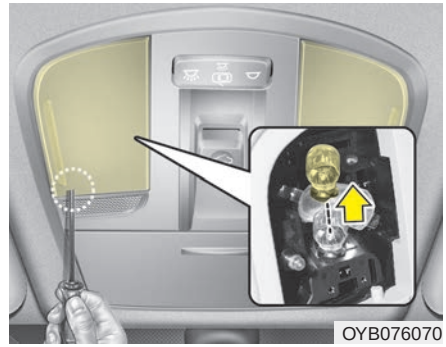
OYB076070

⚠ WARNING - Interior lamps

Prior to working on the Interior lamps, ensure that the "OFF" button is depressed to avoid burning your fingers or receiving an electric shock.

1. Using a flat-blade screwdriver, gently pry the lamp assembly from interior.
2. Remove the bulb by pulling it straight out.
3. Install a new bulb in the socket.
4. Install the lamp assembly to interior.

⚠ CAUTION

Be careful not to dirty or damage the lens, lens tab, and plastic housings.

Vanity mirror lamp bulb replacement

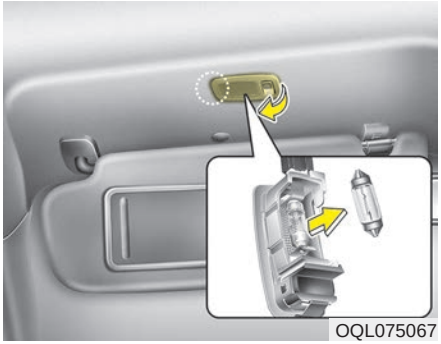

⚠ WARNING - Interior lamps

Prior to working on the Interior lamps, ensure that the "OFF" button is depressed to avoid burning your fingers or receiving an electric shock.

1. Using a flat-blade screwdriver, gently pry the lamp assembly from interior.
2. Remove the bulb by pulling it straight out.
3. Install a new bulb in the socket.
4. Install the lamp assembly to interior.

⚠ CAUTION

Be careful not to dirty or damage the lens, lens tab, and plastic housings.

Room lamp bulb replacement

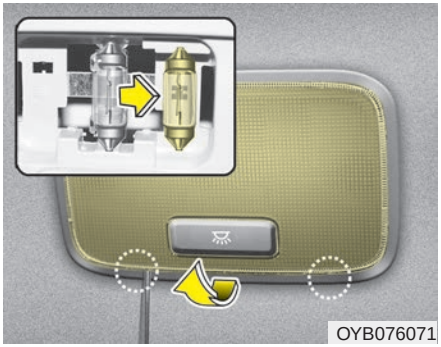

⚠ WARNING - Interior lamps

Prior to working on the Interior lamps, ensure that the "OFF" button is depressed to avoid burning your fingers or receiving an electric shock.

1. Using a flat-blade screwdriver, gently pry the lens cover from lamp housing.
2. Remove the bulb by pulling it straight out.
3. Install a new bulb in the socket.
4. Align the lens cover tabs with the lamp housing notches and snap the lens into place.

⚠ CAUTION

Be careful not to dirty or damage the lens, lens tab, and plastic housings.

Glove box lamp bulb replacement

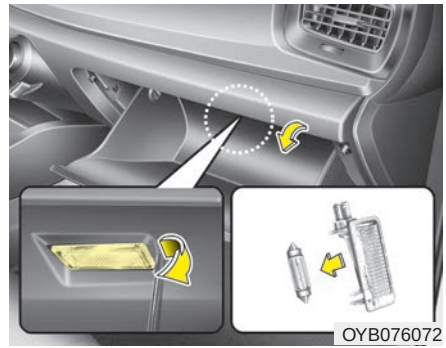

1. Using a flat-blade screwdriver, gently pry the lamp assembly from interior.
2. Remove the bulb by pulling it straight out.
3. Install a new bulb in the socket.
4. Install the lamp assembly to interior.

⚠ **CAUTION**

Be careful not to dirty or damage the lens, lens tab, and plastic housings.

Tailgate room lamp bulb replacement (for 5 door)

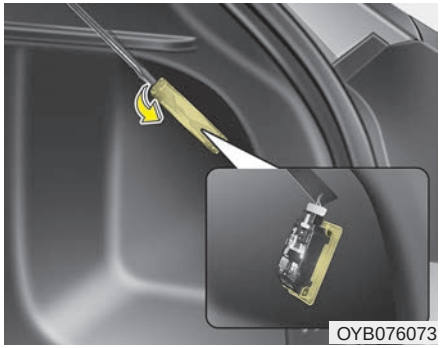

1. Using a flat-blade screwdriver, gently pry the lens cover from lamp housing.
2. Remove the bulb by pulling it straight out.
3. Install a new bulb in the socket.
4. Align the lens cover tabs with the lamp housing notches and snap the lens into place.

⚠ **CAUTION**

Be careful not to dirty or damage the lens, lens tab, and plastic housings.

APPEARANCE CARE

Exterior care

Exterior general caution

It is very important to follow the label directions when using any chemical cleaner or polish. Read all warning and caution statements that appear on the label.

Finish maintenance

Washing

To help protect your vehicle's finish from rust and deterioration, wash it thoroughly and frequently at least once a month with lukewarm or cold water.

If you use your vehicle for off-road driving, you should wash it after each off-road trip. Pay special attention to the removal of any accumulation of salt, dirt, mud, and other foreign materials. Make sure the drain holes in the lower edges of the doors and rocker panels are kept clear and clean.

Insects, tar, tree sap, bird droppings, industrial pollution and similar deposits can damage your vehicle's finish if not removed immediately.

Even prompt washing with plain water may not completely remove all these deposits. A mild soap, safe for use on painted surfaces, may be used.

After washing, rinse the vehicle thoroughly with lukewarm or cold water. Do not allow soap to dry on the finish.

⚠ WARNING

After washing the vehicle, test the brakes while driving slowly to see if they have been affected by water. If braking performance is impaired, dry the brakes by applying them lightly while maintaining a slow forward speed.

High-pressure washing

- When using high-pressure washers, make sure to maintain sufficient distance from the vehicle.

  Insufficient clearance or excessive pressure can lead to component damage or water penetration.
- Do not spray the camera, sensors or its surrounding area directly with a high pressure washer. Shock applied from high pressure water may cause the device to not operate normally.
- Do not bring the nozzle tip close to boots (rubber or plastic covers) or connectors as they may be damaged if they come into contact with high pressure water.

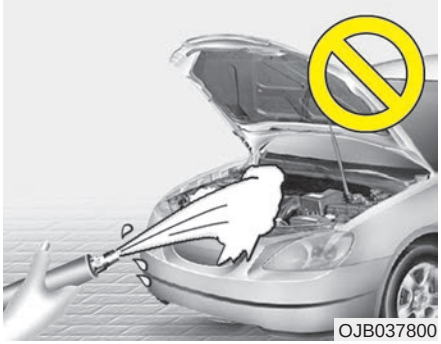
OJB037800

⚠ CAUTION - Wet engine

- ***Water washing in the engine compartment including high pressure water washing may cause the failure of electrical circuits located in the engine compartment.***
- ***Never allow water or other liquids to come in contact with electrical/electronic components inside the vehicle as this may damage them.***

Waxing

Wax the vehicle when water will no longer bead on the paint.

Always wash and dry the vehicle before waxing. Use a good quality liquid or paste wax, and follow the manufacturer's instructions. Wax all metal trim to protect it and to maintain its luster.

Removing oil, tar, and similar materials with a spot remover will usually strip the wax from the finish. Be sure to re-wax these areas even if the rest of the vehicle does not yet need waxing.

Do not apply wax on embossed unpainted unit, as it may tarnish the unit.

⚠ **CAUTION - Drying vehicle**

- ***Wiping dust or dirt off the body with a dry cloth will scratch the finish.***
- ***Do not use steel wool, abrasive cleaners, acid detergents or strong detergents containing high alkaline or caustic agents on chrome-plated or anodized aluminum parts. This may result in damage to the protective coating and cause discoloration or paint deterioration.***

Finish damage repair

Deep scratches or stone chips in the painted surface must be repaired promptly. Exposed metal will quickly rust and may develop into a major repair expense.

If your vehicle is damaged and requires any metal repair or replacement, be sure the body shop applies anti-corrosion materials to the parts repaired or replaced.

Bright-metal maintenance

- To remove road tar and insects, use a tar remover, not a scraper or other sharp object.
- To protect the surfaces of bright-metal parts from corrosion, apply a coating of wax or chrome preservative and rub to a high luster.
- During winter weather or in coastal areas, cover the bright metal parts with a heavier coating of wax or preservative. If necessary, coat the parts with non-corrosive petroleum jelly or other protective compound.

Underbody maintenance

Road salt and other corrosive chemicals are used in cold weather states to melt snow and prevent ice accumulation. If these chemicals are not regularly removed, they will corrode the vehicle underbody and over time damage fuel lines, the fuel tank retention system, the vehicle suspension, the exhaust system, and even the body frame.

- Wash the undercarriage of your vehicle regularly during the winter and whenever your vehicle has been exposed to such salts or chemicals.

- Do a thorough washing of the undercarriage at the end of the winter.
- Use professional service technicians or governmental inspection stations to annually inspect for corrosion.
- Immediately seek an inspection of your vehicle if you become visually aware of corrosion flaking or scaling or if you become aware of a change in vehicle performance, such as soft or spongey brakes, fluids leaking, impairment of directional control, suspension noises or rattling metal straps.

Aluminum wheel maintenance

The aluminum wheels are coated with a clear protective finish.

- Do not use any abrasive cleaner, polishing compound, solvent, or wire brushes on aluminum wheels. They may scratch the finish.
- Clean the wheel when it has cooled.
- Use only a mild soap or neutral detergent, and rinse thoroughly with water. Also, be sure to clean the wheels after driving on salted roads. This helps prevent corrosion.
- Avoid washing the wheels with highspeed vehicle wash brushes.
- Do not use any alkaline or acid detergents It may damage and corrode the aluminum wheels coated with a clear protective finish.

Corrosion protection

Protecting your vehicle from corrosion

By using the most advanced design and construction practices to combat corrosion, we produce vehicles of the highest quality. However, this is only part of the job. To achieve the long-term corrosion resistance your vehicle can deliver, the owner's cooperation and assistance is also required.

Common causes of corrosion

The most common causes of corrosion on your vehicle are:

- Road salt, dirt and moisture that is allowed to accumulate underneath the vehicle.
- Removal of paint or protective coatings by stones, gravel, abrasion or minor scrapes and dents which leave unprotected metal exposed to corrosion.

High-corrosion areas

If you live in an area where your vehicle is regularly exposed to corrosive materials, corrosion protection is particularly important. Some of the common causes of accelerated corrosion are road salts, dust control chemicals, ocean air and industrial pollution.

Moisture breeds corrosion

Moisture creates the conditions in which corrosion is most likely to occur. For example, corrosion is accelerated by high humidity, particularly when temperatures are just above freezing. In such conditions, the corrosive material is kept in contact with the vehicle's surface by moisture that evaporates slowly.

Mud is particularly corrosive because it dries slowly and holds moisture in contact with the vehicle. Although the mud appears to be dry, it can still retain the moisture and promote corrosion.

High temperatures can also accelerate corrosion of parts that are not properly ventilated so the moisture can be dispersed. For all these reasons, it is particularly important to keep your vehicle clean and free of mud or accumulations of other materials. This applies not only to the visible surfaces but particularly to the underside of the vehicle.

To help prevent corrosion

You can help prevent corrosion from beginning by observing the following:

Keep your vehicle clean

The best way to prevent corrosion is to keep your vehicle clean and free of corrosive materials. Attention to the underside of the vehicle is particularly important.

- If you live in a high-corrosion area — where road salts are used, near the ocean, areas with industrial pollution, acid rain, etc.—, you should take extra care to prevent corrosion. In winter, hose off the underside of your vehicle at least once a month and be sure to clean the underside thoroughly when winter is over.
- When cleaning underneath the vehicle, give particular attention to the components under the fenders and other areas that are hidden from view. Do a thorough job; just dampening the accumulated mud rather than washing it away will accelerate corrosion rather than prevent it. Water under high pressure and steam are particularly effective in removing accumulated mud and corrosive materials.

- When cleaning lower door panels, rocker panels and frame members, be sure that drain holes are kept open so that moisture can escape and not be trapped inside to accelerate corrosion.

Keep your garage dry

Don't park your vehicle in a damp, poorly ventilated garage. This creates a favorable environment for corrosion. This is particularly true if you wash your vehicle in the garage or drive it into the garage when it is still wet or covered with snow, ice or mud. Even a heated garage can contribute to corrosion unless it is well ventilated so moisture is dispersed.

Keep paint and trim in good condition

Scratches or chips in the finish should be covered with "touch-up" paint as soon as possible to reduce the possibility of corrosion. If bare metal is showing through, the attention of a qualified body and paint shop is recommended.

Bird droppings: Bird droppings are highly corrosive and may damage painted surfaces in just a few hours. Always remove bird droppings as soon as possible.

Don't neglect the interior

Moisture can collect under the floor mats and carpeting and cause corrosion. Check under the mats periodically to be sure the carpeting is dry. Use particular care if you carry fertilizers, cleaning materials or chemicals in the vehicle.

These should be carried only in proper containers and any spills or leaks should be cleaned up, flushed with clean water and thoroughly dried.

Interior care

Interior general precautions

Prevent chemicals such as perfume, cosmetic oil, sun cream, hand cleaner, and air freshener from contacting the interior parts because they may cause damage or discoloration. If they do contact the interior parts, wipe them off immediately. If necessary, use a vinyl cleaner, see product instructions for correct usage.

⚠ CAUTION - Electrical components

Never allow water or other liquids to come in contact with electrical/electronic components inside the vehicle as this may damage them.

Cleaning the upholstery and interior trim

Vinyl

Remove dust and loose dirt from vinyl with a whisk broom or vacuum cleaner. Clean vinyl surfaces with a vinyl cleaner.

Fabric

Remove dust and loose dirt from fabric with a whisk broom or vacuum cleaner. Clean with a mild soap solution recommended for upholstery or carpets. Remove fresh spots immediately with a fabric spot cleaner. If fresh spots do not receive immediate attention, the fabric can be stained and its color can be affected. Also, its fire-resistant properties can be reduced if the material is not properly maintained.

Using anything but recommended cleaners and procedures may affect the fabric's appearance and fire-resistant properties.

Cleaning the lap/shoulder belt webbing

Clean the belt webbing with any mild soap solution recommended for cleaning upholstery or carpet. Follow the instructions provided with the soap. Do not bleach or re-dye the webbing because this may weaken it.

Cleaning the interior window glass

If the interior glass surfaces of the vehicle become fogged (that is, covered with an oily, greasy or waxy film), they should be cleaned with a glass cleaner. Follow the directions on the glass cleaner container.

⚠ **CAUTION - Rear window**

Do not scrape or scratch the inside of the rear window. This may result in damage of the rear window defroster grid.

Taking care of leather seats

- Vacuum the seat periodically to remove dust and sand on the seat. It will prevent abrasion or damage of the leather and maintain its quality.
- Wipe the natural leather seat cover often with dry or soft cloth.
- Sufficient use of a leather protective may prevent abrasion of the cover and helps maintain the color.

  Be sure to read the instructions and consult a specialist when using leather coating or protective agents.
- Leather with bright colors(beige, cream beige) is easily contaminated and clear in appearance. Clean the seats frequently.
- Avoid wiping with wet cloth. It may cause the surface to crack.

Cleaning the leather seats

- Remove all contaminations instantly. Refer to instructions below for removal of each contaminant.
- Cosmetic products(sunscreen, foundation, etc.)
  - Apply cleansing cream on a cloth and wipe the contaminated point. Wipe off the cream with a wet cloth and remove water with a dry cloth.
- Beverages(coffee, soft drink, etc.)
  - Apply a small amount of neutral detergent and wipe until contaminations do not smear.
- Oil
  - Remove oil instantly with absorbable cloth and wipe with stain remover for natural leather only.
- Chewing gum
  - Harden the gum with ice and remove gradually.

⚠ **CAUTION - Leather**

When cleaning leather products (steering wheel, seats etc.), use neutral detergents or low alcohol content solutions. If you use high alcohol content solutions or acid/alkaline detergents, the color of the leather may fade or the surface may get stripped off.

Fabric seat cover using precautions (If equipped)

Please clean the fabric seats regularly with a vacuum cleaner in consideration of fabric material characteristics. If they are heavily soiled with beverage stains, etc., use a suitable interior cleaner. To prevent damage to seat covers, wipe off the seat covers down to the seams with a large wiping motion and moderate pressure using a soft sponge or microfiber cloth.

Velcro closures on clothing or sharp objects may cause snagging or scratches on the surface of the seats.

Make sure not to rub such objects against the surface.

EMISSION CONTROL SYSTEM

The emission control system of your vehicle is covered by a written limited warranty. Please see the warranty information contained in the Warranty & Consumer Information manual in your vehicle.

Your vehicle is equipped with an emission control system to meet all applicable emission regulations.

There are three emission control systems, as follows.

(1) Crankcase emission control system

(2) Evaporative emission control system

(3) Exhaust emission control system

In order to assure the proper function of the emission control systems, it is recommended that you have your vehicle inspected and maintained by an authorized Kia dealer in accordance with the maintenance schedule in this manual.

Caution for the Inspection and Maintenance Test (With Electronic Stability Control (ESC) system)

- **To prevent the vehicle from misfiring during dynamometer testing, turn the Electronic Stability Control (ESC) system off by pressing the ESC switch.**
- **After dynamometer testing is completed, turn the ESC system back on by pressing the ESC switch again.**

1. Crankcase emission control system

The positive crankcase ventilation system is employed to prevent air pollution caused by blow-by gases being emitted from the crankcase. This system supplies fresh filtered air to the crankcase through the air intake hose. Inside the crankcase, the fresh air mixes with blow-by gases, which then pass through the PCV valve into the induction system.

2. Evaporative emission control (including ORVR: Onboard Refueling Vapor Recovery) system

The Evaporative Emission Control System is designed to prevent fuel vapors from escaping into the atmosphere.

(The ORVR system is designed to allow the vapors from the fuel tank to be loaded into a canister while refueling at the gas station, preventing the escape of fuel vapors into the atmosphere.)

Canister

Fuel vapors generated inside the fuel tank are absorbed and stored in the onboard canister. When the engine is running, the fuel vapors absorbed in the canister are drawn into the surge tank through the purge control solenoid valve.

Purge Control Solenoid Valve (PCSV)

The purge control solenoid valve is controlled by the Engine Control Module (ECM); when the engine coolant temperature is low during idling, the PCSV closes so that evaporated fuel is not taken into the engine. After the engine warms up during ordinary driving, the PCSV opens to introduce evaporated fuel to the engine.

3. Exhaust emission control system

The Exhaust Emission Control System is a highly effective system which controls exhaust emissions while maintaining good vehicle performance.

Vehicle modifications

This vehicle should not be modified. Modification of your vehicle could affect its performance, safety or durability and may even violate governmental safety and emissions regulations.

In addition, damage or performance problems resulting from any modification may not be covered under warranty.

- If you use unauthorized electronic devices, it may cause the vehicle to operate abnormally, wire damage, battery discharge and fire. For your safety, do not use unauthorized electronic devices.

Engine exhaust gas precautions (carbon monoxide)

- Carbon monoxide can be present with other exhaust fumes. Therefore, if you smell exhaust fumes of any kind inside your vehicle, have it inspected and repaired immediately. If you ever suspect exhaust fumes are coming into your vehicle, drive it only with all the windows fully open. Have your vehicle checked and repaired immediately.

⚠ WARNING - Exhaust

Engine exhaust gases contain carbon monoxide (CO). Though colorless and odorless, it is dangerous and could be lethal if inhaled. Follow the instructions on this page to avoid CO poisoning.

- Do not operate the engine in confined or closed areas (such as garages) any more than what is necessary to move the vehicle in or out of the area.
- When the vehicle is stopped in an open area for more than a short time with the engine running, adjust the ventilation system (as needed) to draw outside air into the vehicle.
- Never sit in a parked or stopped vehicle for any extended time with the engine running.
- When the engine stalls or fails to start, excessive attempts to restart the engine may cause damage to the emission control system.

Operating precautions for catalytic converters (if equipped)

⚠ WARNING - Catalytic converter

Keep away from the catalytic converter and exhaust system while the vehicle is running or immediately thereafter. The exhaust and catalytic systems are very hot and may burn you.

⚠ WARNING - Fire

- **Do not park, idle or drive the vehicle over or near flammable objects, such as grass, vegetation, paper, leaves, etc. A hot exhaust system can ignite flammable items under your vehicle.**
- **Also, do not remove the heat sink around the exhaust system, do not seal the bottom of the vehicle or do not coat the vehicle for corrosion control. It may present a fire risk under certain conditions.**

Your vehicle is equipped with a catalytic converter emission control device.

Therefore, the following precautions must be observed:

- Use only UNLEADED FUEL for gasoline engines.
- Do not operate the vehicle when there are signs of engine malfunction, such as misfire or a noticeable loss of performance.
- Do not misuse or abuse the engine. Examples of misuse are coasting with the ignition off and descending steep grades in gear with the ignition off.
- Do not operate the engine at high idle speed for extended periods (5 minutes or more).
- Do not modify or tamper with any part of the engine or emission control system. All inspections and adjustments must be made by an authorized Kia dealer.
- Avoid driving with an extremely low fuel level. Running out of fuel could cause the engine to misfire, damaging the catalytic converter.

Failure to observe these precautions could result in damage to the catalytic converter and to your vehicle. Additionally, such actions could void your warranties.

Specifications & Consumer information

Engine 9-2
Dimensions 9-2
Bulb wattage 9-3
Tires and wheels 9-5
Weight/volume 9-6
Air conditioning system 9-6
Recommended lubricants and capacities 9-7
• Recommended SAE viscosity number 9-9
Vehicle Identification Number (VIN) 9-10
Vehicle certification label 9-10
Tire specification and pressure label 9-11
Engine number 9-11

ENGINE

Item	Gamma 1.6L GDI
Displacement [cc (cu.in)]	1,591 (97.09)
Bore x Stroke [mm (in)]	77 x 85.4 (3.03 x 3.36)
Firing order	1 → 3 → 4 → 2
No. of cylinders	4, In-line

DIMENSIONS

Item		mm (in)
Overall length	4 Door	4,385 (172.6)
	5 Door	4,065 (160)
Overall width		1,725 (67.9)
Overall height	4 Door	1,450 (57.1)
	5 Door	1,450 (57.1)
Front tread	185/65R15	1,524 (60.0)
	205/45R17	1,512 (59.5)
Rear tread	185/65R15	1,529 (60.2)
	205/45R17	1,517 (59.7)
Wheelbase		2,580 (101.6)

BULB WATTAGE

Light Bulb			Wattage(W)	Bulb type
Front	Head lamp (Low/High)	Bulb type	55/60W	HB2
		LED type	LED	LED
	Front turn signal lamps		21W	PY21W
	Front position lamps	Bulb type	8W	PY28/8W
		LED type	0.5W x 12	LED
	Front fog lamps*		51W	HB4
	Daytime running lamp (DRL)*	Bulb type	21W	P21W
		LED type	1W x 12	LED
	Side Marker Lamp	Bulb type	5W	W5W
		LED type	0.5W x 2	LED
Rear	Rear Stop/Tail lamps (outside)	Bulb type	21W/5W	P21/5W
	Rear tail lamps (Inside)		5W	W5W
	Rear Stop/Tail lamps (outside)	LED type	1W	LED
	Rear tail lamps (Inside)		0.2W	LED
	Side Marker Lamp	Bulb type	5W	W5W
		LED type	0.2W x 3	LED
	Rear turn signal lamps		21W	PY21W
	Back-up lamps		16W	W16W
	High mounted stop lamp*		5W x 4	W5W
	License plate lamps		5W x 2	W5W

* If equipped

(Continued)

(Continued)

Light Bulb		Wattage	Bulb type
Interior	Map lamps*	10W x 2	W10W
	Room lamps	8W	FESTOON
	Vanity mirror lamps*	8W	FESTOON
	Glove box lamp*	8W	FESTOON
	Luggage room lamp	8W	FESTOON

* If equipped

TIRES AND WHEELS

Item	Tire size	Wheel size	Inflation pressure [kPa (psi)]				Wheel lug nut torque kgf•m (lbf•ft, N•m)
			Normal load *1		Maximum load		
			Front	Rear	Front	Rear	
Full size tire	185/65R15	5.5J X 15	230 (33)	230 (33)	230 (33)	230 (33)	11~13 (79~94, 107~127)
	205/45R17	6.5J X 17					
Compact spare tire *2	T125/80D15	3.5J x 15	420 (60)	420 (60)	420 (60)	420 (60)	

*1 : Normal load : Up to 3 persons

*2 : If your vehicle is not equipped with a compact spare tire, it will be equipped with a Tire Mobility Kit

⚠ CAUTION

When replacing tires, use the same size originally supplied with the vehicle.
Using tires of a different size may damage the related parts or cause them to operate improperly.

✻ NOTICE

- **We recommend replacing tires with the same make and model originally supplied with the vehicle; not doing so may affect driving performance.**
- **When driving in high altitude grades such as mountainous areas, injection of additional air into tires may be required due to lower atmospheric pressure. Therefore, add 1.5 psi for every 1,000m above sea level at the recommended tire pressure when frequently driving in high mountainous areas.**

WEIGHT/VOLUME

Item		Gamma 1.6L GDI	
		4 Door	5 Door
Gross vehicle weight kg (lbs.)	M/T	1,600 (3,527)	1,600 (3,527)
	A/T	1,640 (3,616)	1,640 (3,616)
Luggage volume *l* (cu ft)		387 (13.7)	493 *1 / 928 *2 (17.4 *1 / 32.8 *2)

*1 : Behind rear seat to upper edge of the seat back.

*2 : Behind front seat to roof.

M/T : Manual transmission

A/T : Automatic transmission

AIR CONDITIONING SYSTEM

Item	Weight of volume	Classification
Refrigerant	480 ± 25g 16.9 ± 0.88 oz	R-1234yf
Compressor lubricant	110 ± 10g 3.9 ± 0.35 oz	FD46XG (IDEMITSU)

We recommend that you contact an authorized Kia dealer for more details.

RECOMMENDED LUBRICANTS AND CAPACITIES

To help achieve proper engine and powertrain performance and durability, use only lubricants of the proper quality. The correct lubricants also help promote engine efficiency that results in improved fuel economy.
These lubricants and fluids are recommended for use in your vehicle.

Lubricant			Volume	Classification
Engine oil [*1] [*2] (drain and refill) Recommends TOTAL QUARTZ	Gamma 1.6L GDI		3.5 *l* (3.7 US qt.)	API Latest (ILSAC Latest)
Manual transmission fluid	Gamma 1.6L GDI		1.6 ~ 1.7 *l* (1.5 ~ 1.6 US qt.)	API Service GL-4 SAE 70W - HK SYN MTF 70W - SPIRAX S6 GHME 70W MTF - GS MTF HD 70W
Automatic transmission fluid	Gamma 1.6L GDI		6.7 *l* (7.1 US qt.)	ATF SP-IV (Recommended MICHANG, SK, NOCA, Kia genuine)
Coolant	Gamma 1.6L GDI	M/T	5.4 *l* (5.70 US qt.)	Mixture of antifreeze and water (Ethylene-glycol with phosphate based coolant for cooling device)
		A/T	5.5 *l* (5.81 US qt.)	

M/T : Manual transmission
A/T : Automatic transmission

Lubricant	Volume	Classification
Brake/clutch fluid	0.7~0.8 *l* (0.7~0.8 US qt.)	FMVSS116 DOT-3 or DOT-4
Fuel	45 *l* (11.9 US gal)	Unleaded gasoline

*1 Refer to the recommended SAE viscosity numbers on the next page.

*2 Engine oils labeled Energy Conserving Oil are now available. Along with other additional benefits, they contribute to fuel economy by reducing the amount of fuel necessary to overcome engine friction. Often, these improvements are difficult to measure in everyday driving, but in a year's time, they can offer significant cost and energy savings.

Recommended SAE viscosity number

Engine oil viscosity (thickness) has an effect on fuel economy and cold weather operation (engine start and engine oil flowability). Lower viscosity engine oils can provide better fuel economy and cold weather performance, however, higher viscosity engine oils are required for satisfactory lubrication in hot weather. Using oils of any viscosity other than those recommended could result in engine damage. When choosing an oil, consider the range of temperature your vehicle will be operated in before the next oil change. Proceed to select the recommended oil viscosity from the chart.

Temperature Range for SAE Viscosity Numbers											
Temperature		°C	-30	-20	-10	0	10	20	30	40	50
		(°F)	-10	0	20	40	60	80	100	120	
Engine Oil	Gamma 1.6L GDI *1				10W-30						
			5W-20*1, 5W-30								

*1 : For better fuel economy, it is recommended to use the engine oil of a viscosity grade SAE 5W-20 (API Latest (ILSAC Latest)). However, if the engine oil is not available in your country, select the proper engine oil using the engine oil viscosity chart.

VEHICLE IDENTIFICATION NUMBER (VIN)

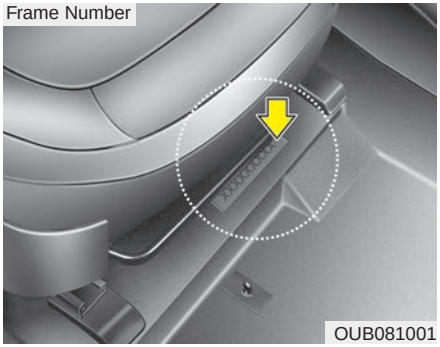

The vehicle identification number (VIN) is the number used in registering your vehicle and in all legal matters pertaining to its ownership, etc.

The number is punched under driver or front passenger seat.

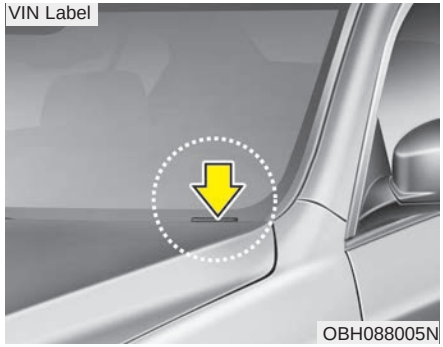

VIN label

The VIN is also on a plate attached to the top of the dashboard. The number on the plate can easily be seen through the windshield from outside.

VEHICLE CERTIFICATION-LABEL

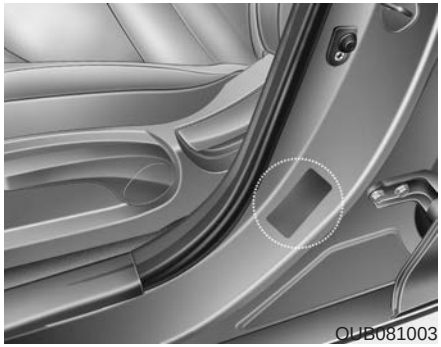

The vehicle certification label attatched on the driver's side center pillar gives the vehicle identification number (VIN).

TIRE SPECIFICATION AND PRESSURE LABEL

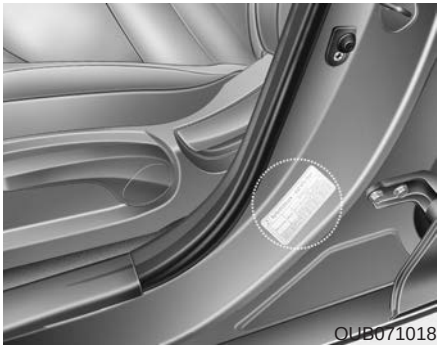

The tires supplied on your new vehicle are chosen to provide the best performance for normal driving.

The tire label located on the driver's side center pillar gives the tire pressures recommended for your vehicle.

ENGINE NUMBER

■ Gamma 1.6L GDI Engine (Gasoline)

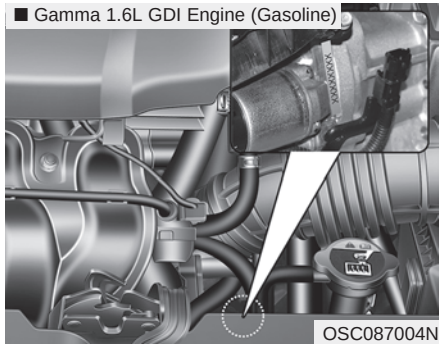

The engine number is stamped on the engine block as shown in the drawing.

Index

A

Air bag - advanced supplemental restraint system.....3-33
Adding equipment to or modifying your air bag-equipped vehicle 3-61
Air bag warning label 3-61
Air bag warning light.....3-37
Curtain air bag 3-53
Driver's and passenger's front air bag 3-48
How does the air bag system operate 3-34
Inflation and non-inflation conditions of the air bag..3-55
Occupant detection system 3-40
Side air bag 3-51
SRS Care 3-60
SRS components and functions 3-37
Air cleaner 8-29
Filter replacement 8-29
Air conditioning system 9-6
Appearance care 8-99
Exterior care.....8-99
Interior care 8-104
Audio (with touch screen) 5-8
Feature of your audio.....5-9
Media 5-20
Phone 5-30
Radio 5-15
Setup 5-39
SiriusXM 5-18
Audio system 5-2
Antenna 5-2
AUX, USB port 5-3
How vehicle audio works 5-3
Automatic climate control system 4-119
Automatic heating and air conditioning 4-120
Manual heating and air conditioning.....4-121
System operation 4-126
Automatic transmission 6-18
Automatic transmission operation 6-18
Good driving practices.....6-23

B

Battery.....8-37
For best battery service 8-37
Recharging the battery.....8-38
Reset items.....8-39
Before driving.....6-4
Before entering vehicle 6-4
Before starting 6-4
Necessary inspections 6-4
Brake system.....6-24
Anti-lock Brake System (ABS) 6-29
Electronic Stability Control (ESC) 6-30
Good braking practices 6-37
Hill-start assist control (HAC).....6-34
Parking brake 6-26

Power brakes 6-24
Vehicle Stability Management (VSM).....6-35
Brake/clutch fluid 8-26
Checking the brake/clutch fluid level 8-26
Bulb wattage 9-3

C

Checking fluid levels 8-20
Child Restraint System (CRS) 3-26
Using a child restraint system 3-27
Climate control air filter 8-31
Filter inspection 8-31
Cruise Control System 6-50
Cruise Control Switch 6-50
To cancel cruise control 6-53
To decrease the cruising speed 6-52
To increase cruise control set speed 6-52
To resume cruising speed at more than approximately 30 km/h (20 mph) 6-53
To set cruise control speed.....6-51
To temporarily accelerate with the cruise control on 6-52
To turn cruise control off 6-54

D

Declaration of conformity 5-42
IC 5-42
Defroster 4-108
Rear window defroster.....4-108
Dimensions 9-2
Door locks.....4-19
Auto door lock/unlock feature 4-22
Child-protector rear door lock 4-22
Impact sensing door unlock system.....4-22
Operating door locks from inside the vehicle 4-20
Operating door locks from outside the vehicle 4-19
Speed sensing door lock system 4-22

E

Economical operation 6-56
Emergency starting 7-5
Jump starting 7-5
Emission control system.....8-107
Crankcase emission control system 8-107
Evaporative emission control (including ORVR: Onboard Refueling Vapor Recovery) system 8-107
Exhaust emission control system.....8-108
Engine 9-2
Engine compartment 2-7, 8-4
Engine coolant 8-23
Changing the coolant 8-25
Checking the coolant level.....8-23
Engine number 9-11

Engine oil 8-21
Changing the engine oil and filter 8-22
Checking the engine oil level 8-21
Engine start/stop button 6-8
Engine start/stop button position 6-8
Illuminated engine start/stop button 6-8
Explanation of scheduled maintenance items 8-16
Exterior overview 2-2

F

Forward Collision-avoidance Assist (FCA) system (Radar type) 6-39
Brake operation 6-42
FCA warning message and system control 6-41
Limitation of the system 6-45
Sensor to detect the distance from the vehicle in front (front radar) 6-43
System malfunction 6-44
Fuel filler lid 4-42
Closing the fuel filler lid 4-42
Opening the fuel filler lid 4-42
Fuel requirements 1-3
Do not use methanol 1-5
Fuel Additives 1-5
Gasoline containing alcohol and methanol 1-3
Fuses 8-55
Engine compartment fuse replacement 8-59
Fuse/relay panel description 8-61
Inner panel fuse replacement 8-57
Memory fuse 8-58

H

Hood 4-39
Closing the hood 4-40
Hood open warning 4-40
Opening the hood 4-39
How to use this manual 1-2

I

If the engine overheats 7-6
If the engine will not start 7-4
If engine turns over normally but does not start 7-4
If the engine doesn't turn over or turns over slowly 7-4
If you have a flat tire (with spare tire) 7-26
Changing tires 7-28
Jack and tools 7-26
Jack label 7-35
Removing and storing the spare tire 7-27
If you have a flat tire (with Tire Mobility Kit) 7-18
Checking the tire inflation pressure 7-24
Components of the Tire Mobility Kit 7-20

Distributing the sealant 7-23
Introduction 7-18
Notes on the safe use of the Tire Mobility Kit 7-19
Technical data 7-25
Using the Tire Mobility Kit 7-21
In case of an emergency while driving.....7-3
If engine stalls while driving 7-3
If the engine stalls at a crossroad or crossing 7-3
If you have a flat tire while driving.....7-3
Instrument cluster 4-57
Gauges 4-59
Instrument Cluster Control 4-58
LCD window control 4-58
Transmission shift indicator.....4-62
Instrument panel overview 2-6
Interior features.....4-136
Clothes hanger 4-140
Covering shelf (for 5 door) 4-142
Cup holder 4-136
Floor mat anchor(s) 4-141
Power outlet 4-138
Seat warmer 4-137
Shopping bag holder 4-141
Sunvisor 4-136
USB charger.....4-139
Interior light 4-103
Automatic turn off function 4-103
Glove box lamp 4-106
Luggage room lamp.....4-106
Map lamp 4-103
Room lamp.....4-104
Vanity mirror lamp.....4-107
Interior overview 2-5

K

Key positions 6-6
Ignition switch position 6-6
Keys 4-4
Key operations 4-4
Record your key number 4-4

L

LCD windows.....4-64
LCD modes (for type B cluster) 4-69
Over view.....4-64
Service mode 4-70
Trip information (Trip computer) 4-64
User settings mode (for type B cluster).....4-70
Light bulbs 8-70
Back-up lamp bulb replacement (for 4 door) 8-92
Back-up lamp bulb replacement (for 5 door) 8-86
Bulb replacement precaution 8-70
Daytime running lamp (Bulb type) bulb
replacement 8-81

Front fog lamp bulb replacement.....8-80
Front turn signal lamp bulb replacement
(Headlamp Type A) 8-77
Front turn signal lamp bulb replacement
(Headlamp Type B) 8-79
Glove box lamp bulb replacement 8-97
Headlamp (Low/High beam) (Bulb type) bulb
replacement (Headlamp Type A).....8-75
Headlamp (Low/High beam) (Bulb type) bulb
replacement (Headlamp Type B).....8-78
Headlamp (Low/High beam) (LED type) bulb
replacement (Headlamp Type B).....8-79
High mounted stop lamp bulb replacement
(for 4 door).....8-94
High mounted stop lamp bulb replacement
(for 5 door).....8-89
License plate lamp bulb replacement 8-89
Light bulb position (front) 8-72
Light bulb position (rear) (4 door).....8-74
Light bulb position (rear) (5 door).....8-73
Light bulb position (side).....8-75
Map lamp bulb replacement 8-95
Position lamp + DRL (LED type) bulb replacement..8-81
Rear turn signal lamp bulb replacement (for 4 door)..8-90
Rear turn signal lamp bulb replacement (for 5 door)..8-84
Room lamp bulb replacement 8-97
Side marker (front) (Bulb type) bulb replacement
(Headlamp Type A) 8-76
Side marker (front) (LED type) bulb replacement
(Headlamp Type B) 8-80
Side marker (rear) (Bulb type) bulb replacement
(Rear combination lamp Type A) (for 5 door) 8-87
Side marker (rear) (LED type) bulb replacement
(Rear combination lamp Type B) (for 4 door) 8-92
Side marker (rear) (LED type) bulb replacement
(Rear combination lamp Type B) (for 5 door) 8-88
Side repeater lamp (bulb type) bulb Replacement 8-82
Side repeater lamp (LED type) bulb Replacement 8-82
Stop and tail lamp (LED type) bulb replacement
(for 4 door).....8-94
Stop and tail lamp (LED type) bulb replacement
(for 5 door).....8-85
Stop and tail lamp / Side marker (Bulb type)
replacement (for 4 door) 8-91
Stop and tail lamp bulb replacement (for 5 door) 8-83
Tail lamp (Bulb type) bulb replacement (for 4 door)..8-93
Tail lamp (inside) bulb replacement (for 5 door) 8-86
Tailgate room lamp bulb replacement (for 5 door) 8-98
Trunk lamp bulb replacement (for 4 door) 8-95
Vanity mirror lamp bulb replacement 8-96
Lighting.....4-92
Battery saver function 4-92
Daytime running light 4-93
Front fog light 4-97
Headlight escort function.....4-92
Headlight welcome function 4-92

High beam operation 4-95
Lighting control 4-93
Turn signals and lane change signals 4-96

M

Maintenance services 8-5
Owner maintenance precautions 8-6
Owner's responsibility 8-5
Manual climate control system.....4-109
Checking the amount of air conditioner refrigerant and compressor lubricant 4-118
Climate control air filter 4-117
Heating and air conditioning 4-110
System operation 4-115
Manual transmission.....6-15
Good driving practices.....6-17
Manual transmission operation 6-15
Mirrors 4-54
Inside rearview mirror 4-54
Outside rearview mirror.....4-54

O

Owner maintenance 8-7
Owner maintenance schedule 8-7

P

Parking brake 8-28
Checking the parking brake.....8-28

R

Rear view monitor 4-91
Rear view monitor 4-91
Recommended lubricants and capacities 9-7
Recommended SAE viscosity number 9-9
Remote keyless entry 4-10
Battery replacement 4-12
Immobilizer system 4-14
Limp home (override) procedure.....4-15
Remote keyless entry system operations.....4-10
Transmitter precautions 4-11
Road warning 7-2
Hazard warning flasher 7-2

S

Scheduled maintenance service 8-10
Scheduled maintenance service precaution 8-10
Seat 3-2
Driver's seat.....3-2
Front passenger's seat 3-2

Front seat adjustment 3-5
Headrest (for front seat)....3-6
Rear seat....3-2
Rear seat adjustment 3-9
Seatback pocket 3-9
Seat belts....3-14
Care of seat belts 3-24
Pre-tensioner seat belt 3-20
Seat belt precautions 3-22
Seat belt restraint system 3-14
Smart key 4-6
Smart key functions 4-6
Smart key precautions 4-8
Smart trunk (for 4 door) 4-26
Special driving conditions 6-58
Driving at night 6-59
Driving in flooded areas 6-61
Driving in the rain 6-60
Driving off-road....6-61
Hazardous driving conditions 6-58
Highway driving 6-61
Rocking the vehicle 6-58
Smooth cornering....6-59
Sport mode integrated control system 6-55
Sport mode....6-55
Starting the engine 6-12
Starting the engine with a smart key 6-13
Starting the engine with an ignition key 6-12
Steering wheel....4-51
Electric Power Steering (EPS)....4-51
Heated steering wheel 4-53
Horn 4-52
Tilt and telescopic steering 4-52
Storage compartment 4-133
Center console storage....4-133
Glove box....4-133
Luggage net holder 4-134
Sunglass holder 4-134
Sunroof 4-45
Resetting the sunroof....4-49
Sliding the sunroof 4-47
Sunroof open warning 4-46
Sunshade 4-49
Tilting the sunroof 4-48

T

Tailgate (for 5 door) 4-30
Closing the tailgate 4-30
Emergency tailgate safety release 4-31
Opening the tailgate....4-30
Theft-alarm system 4-16
Armed stage 4-16
Disarmed stage....4-18
Theft-alarm stage 4-17

Tire Pressure Monitoring System (TPMS - Type A) 7-7
Changing a tire with TPMS 7-10
Low tire pressure telltale 7-8
TPMS (Tire Pressure Monitoring System) malfunction indicator 7-9
Tire Pressure Monitoring System (TPMS - Type B) 7-12
Changing a tire with TPMS 7-16
Check tire pressure.....7-12
Low tire pressure position telltale 7-14
Low tire pressure telltale 7-14
Tire specification and pressure label 9-11
Tires and wheels 9-5
Tires and wheels 8-40
All season tires.....8-52
Checking tire inflation pressure.....8-41
Low aspect ratio tire 8-54
Radial-ply tires.....8-53
Recommended cold tire inflation pressures.....8-40
Snow tires 8-53
Summer tires 8-52
Tire care 8-40
Tire maintenance 8-45
Tire pressure.....8-41
Tire replacement 8-44
Tire rotation 8-42
Tire sidewall labeling.....8-45
Tire traction 8-45
Wheel alignment and tire balance 8-43
Wheel replacement 8-45
Towing 7-36
Emergency towing 7-37
Removable towing hook (Front) 7-37
Towing service 7-36
Trunk (for 4 door).....4-24
Closing the trunk 4-24
Emergency trunk safety release 4-25
Opening the trunk 4-24

V

Vehicle break-in process.....1-6
Vehicle certification label 9-10
Vehicle data collection and event data recorders 1-7
Vehicle Identification Number (VIN).....9-10
Vehicle load limit 6-66
Certification label 6-69
Tire and loading information label 6-66
Vehicle weight 6-71
Base curb weight 6-71
Cargo weight 6-71
GAW (Gross Axle Weight) 6-71
GAWR (Gross Axle Weight Rating) 6-71
GVW (Gross Vehicle Weight) 6-71
GVWR (Gross Vehicle Weight Rating).....6-71
Vehicle curb weight 6-71

W

Warning and indicator lights.....4-79
Indicator lights 4-87
Warning lights 4-79
Washer fluid 8-27
Checking the washer fluid level 8-27
Weight/volume 9-6
Windows 4-33
Manual windows 4-38
Power windows 4-34
Windshield defrosting and defogging.....4-128
Automatic climate control system 4-129
Defogging logic 4-130
Manual climate control system 4-128
Winter driving.....6-63
Carry emergency equipment 6-65
Change to "winter weight" oil if necessary 6-64
Check battery and cables 6-64
Check spark plugs and ignition system 6-64
Don't let ice and snow accumulate underneath 6-65
Don't let your parking brake freeze 6-65
Snowy or icy conditions 6-63
To keep locks from freezing 6-64
Use approved window washer anti-freeze in system 6-64
Use high quality ethylene glycol coolant 6-64
Wiper blades 8-33
Blade inspection.....8-33
Blade replacement 8-33
Wipers and washers 4-98
Rear window wiper and washer switch (for 5 door)..4-102
Windshield washers (front) 4-100
Windshield wipers 4-99