Hybrid/Plug-in Hybrid System Overview

HEV (HYBRID ELECTRIC VEHICLE) SYSTEM / H2
PHEV (PLUG-IN ELECTRIC VEHICLE) SYSTEM / H3
CHARGING THE PLUG-IN HYBRID VEHICLE / H4
DRIVING THE HYBRID/PLUG-IN HYBRID VEHICLE / H21
ENERGY FLOW HYBRID/PLUG-IN HYBRID VEHICLE / H28
STARTING THE HYBRID/PLUG-IN HYBRID VEHICLE (SMART KEY) / H32
COMPONENTS OF THE HYBRID/PLUG-IN HYBRID VEHICLE / H34

HEV (HYBRID ELECTRIC VEHICLE) SYSTEM

The Kia Hybrid Electric Vehicle (HEV) uses both the gasoline engine and the electric motor for power. The electric motor is run by a 270V high-voltage HEV battery.

Depending on the driving conditions, the HEV computer selectively operates between the engine and the electric motor or even both at the same time.

Fuel efficiency increases when the engine is at idle, or when the vehicle is driven by the electric motor with the HEV battery.

The HEV battery charge must be maintained, so at times the engine will come on even at idle to act as a generator.

Charging also occurs when decelerating or by regenerative braking.

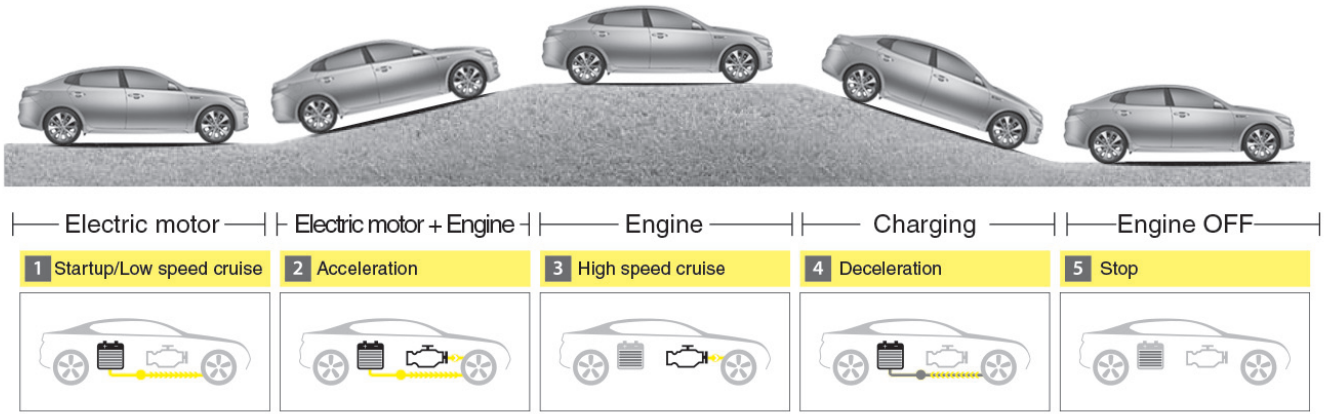

OJFH055281L

PHEV (PLUG-IN ELECTRIC VEHICLE) SYSTEM

The Kia Plug-in Hybrid Electric Vehicle (PHEV) shares the characteristics of both a conventional hybrid electric vehicle and an all-electric vehicle.

When used as a conventional hybrid electric vehicle, the HEV computer selectively operates between the engine and the electric motor or even both at the same time.

When it is operating in the electric vehicle mode, the vehicle is driven only using the electric motor over a certain distance until the hybrid battery becomes low. The driving distance in EV mode depends on customer driving style and road conditions. Aggressive driving maneuvers may at times temporarily enable the engine to operate for maximum power.

The hybrid battery can be fully charged by connecting a plug to an external electric power source.

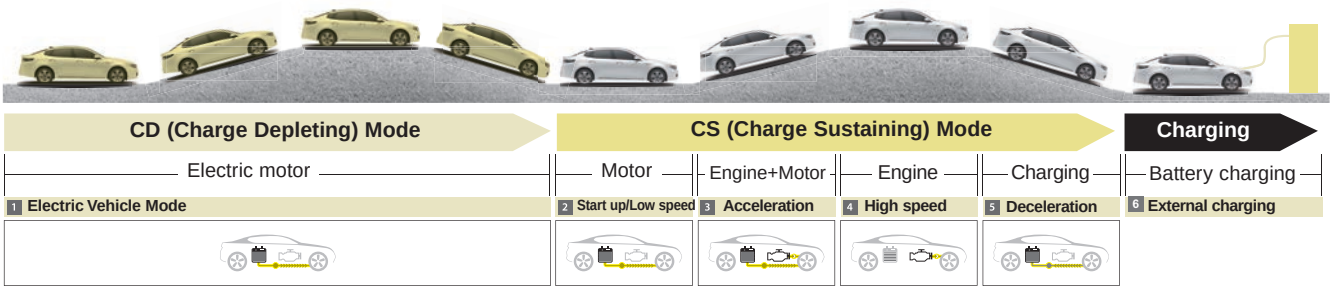

OJFHP056290L

Charging Information

- Normal Charger: The plug-in hybrid vehicle is charged by plugging into a normal charger installed in your home or a public charging station. (For further details, refer to the 'Normal Charge'.)
- Trickle Charger: The plug-in hybrid vehicle can be charged by using household electricity.

The electrical outlet in your home must comply with regulations and can safely accommodate the Voltage / Current (Amps) / Power (Watts) ratings specified on the trickle charge.

Charging Time

- Normal Charger: Takes about from 2 and a half hours to 3 hours at room temperature (Can be charged to 100%.).

Depending on the condition and durability of the high-voltage battery, charger specifications, and ambient temperature, the time required for charging the high-voltage battery may vary.

- Trickle Charger: For charging at home. Please note that the Trickle Charger is slower than the Normal Charger.

Charging Types

Category	Charging Inlet (Vehicle)	Charging Connector	Charging Outlet	Charging Method	Charging Time
Normal Charger	OJFHPQ016006	OJFHPQ016007	OJFHPQ016021L	Normal charger installed in homes or public charging stations	Approximately from 2 and a half hours to 3 hours (to fully charge the plug-in hybrid vehicle, 100%)
Trickle Charger	OJFHPQ016006	OJFHPQ016007	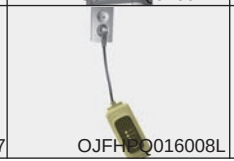 OJFHPQ016008L	Household current	For charging at home. Please note that the Trickle Charger is slower than the Normal Charger.

An actual charger image and a charging method may vary in accordance with the charger manufacturers.

Charging Status

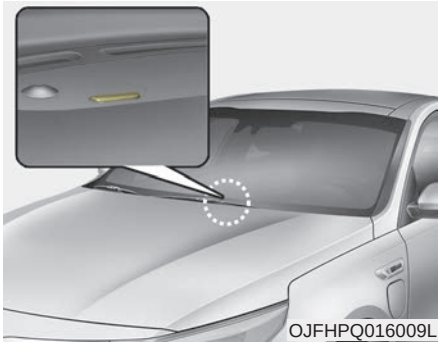

You can monitor the charging status outside of the vehicle when charging the high-voltage battery.

Charging Status	Indicator
Charging in progress	Illuminates (green)
Fully charged	Off
Scheduled charging	Blinks (green) and then turns off
Malfunction	Blinks (red)

Scheduled Charging (if equipped)

- You can set reserved charging using the AVN.

  Refer to the AVN for detailed information about setting reserved charging.
- Scheduled charging can only be done when using a normal charger or the portable charging cable (ICCB: In-Cable Control Box).

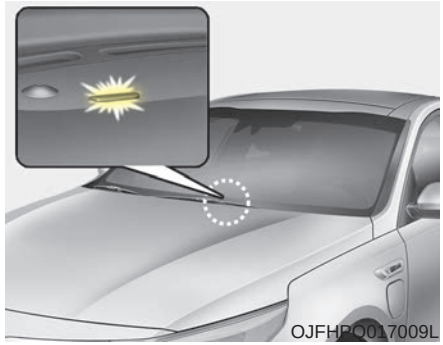

- When scheduled charging is set and the normal charger or the portable charging cable (ICCB: In-Cable Control Box) is connected for charging, the indicator lamp blinks (for 3 minutes) to indicate that scheduled charging is set.

- When scheduled charging is set, charging is not initiated immediately when the normal charger or portable charging cable (ICCB: In-Cable Control Box) is connected. When immediate charging is required, use the AVN to deactivate the scheduled charge setting.

Charging Precautions

■ Normal Charger

⚠ WARNING

- Fires caused by dust or water

Do not connect the charging cable connector plug to the vehicle if there is water or dust on the charging inlet. Connecting while there is water or dust on the charging cable connector and plug may cause a fire or electric shock.

⚠ WARNING

- Public Electric Outlets

Do not use old or worn out public electric outlets to charge your vehicle. There may be a risk of fire and injury when using old worn out public electrical outlets.

⚠ WARNING

- Interference with electronic medical devices

When using medical electric devices such as an implantable cardiac pacemaker, make sure to ask the medical team and manufacturer whether charging your electric vehicle will impact the operation of the medical devices. In some instances, electromagnetic waves that are generated from the charger can seriously impact medical electric devices such as an implantable cardiac pacemaker.

⚠ WARNING

- Touching the charging connector

Do not touch the charging connector, charging plug, and the charging inlet when connecting the charging connector cable to the charging outlet and the charging inlet on the vehicle. Doing so may result in electrocution.

- Comply with the following in order to prevent electrical shock when charging:
  - Use a waterproof charger
  - Make sure to not touch the charging connector and charging plug when your hand is wet
  - Do not charge when there is lightning
  - Do not charge when the charging connector and plug is wet

⚠ WARNING - Charging cable

- **Immediately stop charging when you discover abnormal symptoms (smell, smoke).**
- **Replace the charging cable if the cable coating is damaged to prevent electrical shock.**
- **When connecting or removing the charging cable, make sure to hold the charging connector handle.**

  If you pull the cable itself (without using the handle), the internal wires may disconnect or get damaged. This may lead to electric shock or fire.

⚠ WARNING - Cooling fan

Do not touch the cooling fan while vehicle is charging. When the vehicle is switched OFF while charging, the cooling fan inside the motor compartment may automatically operate.

- Always keep the charging connector and charging plug in clean and dry condition. Be sure to keep the charging cable in a condition where there is no water or moisture.
- Make sure to use the designated charger for charging the vehicle. Using any other charger may cause failure.
- Before charging the battery, turn the vehicle OFF.
- Be careful not to drop the charging connector. The charging connector can be damaged.

Normal Charge

■ Normal Charger

You can charge your vehicle by plugging into a public charger at a charging station.

How to Connect to a Normal Charger

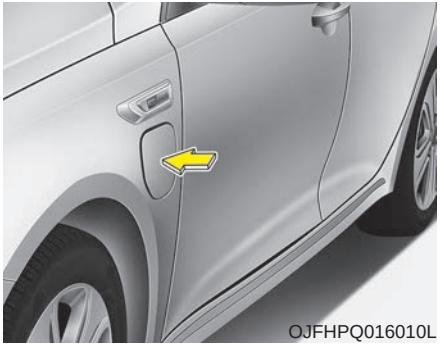

1. Depress the brake pedal and apply the parking brake.
2. Turn OFF all switches, move the shift lever to P (Park), and turn OFF the vehicle.
3. After unlocking doors, open the charging door by pressing it.

✻ NOTICE

- **The charging door does not open when the theft alarm system is armed.**
- **To open the charging inlet cover, all vehicle doors must be unlocked. When the doors are locked, the charging inlet cover will not open.**

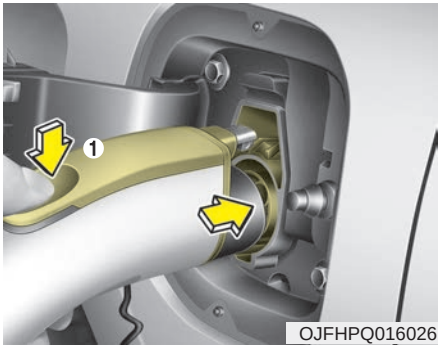

OJFHPQ016026

4. Remove any dust on the charging connector and charging inlet.
5. Hold the charging connector handle and insert it into the charging inlet while pressing the release button(1), until you hear a click sound. If it is not fully connected, a bad connection between the charging connector and the charging terminals may cause a fire.

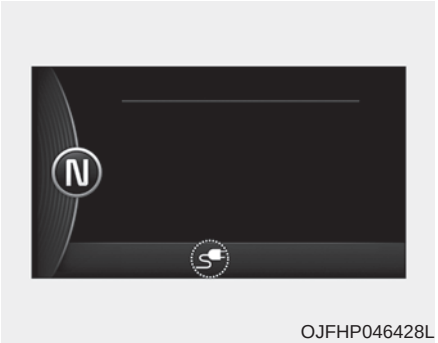

OJFHP046428L

6. Check if the charging cable connection indicator of the high voltage battery in the instrument cluster is turned ON.

   Charging does not occur when the indicator is OFF. When the charging connector is not connected properly, reconnect the charging cable to charge.

✻ NOTICE

- **The charging is in progress only when the shift lever is in P (Park). Charging the battery with the Engine Start/Stop button in the ACC position is possible. However, it may discharge the 12-V battery. Thus, if possible, charge the battery with the Engine Start/Stop button in the OFF position.**
- **Moving the shift lever from P (Park) to R (Reverse)/N(Neutral)/D (Drive) stops the charging process. To restart the charging process, move the shift lever to P (Park), press the Engine Start/Stop button to the OFF position, and disconnect the charging cable. Then, connect the charging cable.**

OJFHP048429N

7. After charging has started, the estimated charging time is displayed on the instrument cluster for about 1 minute. It is also displayed when the driver's door is opened with charging in progress. When scheduled charging is set, the estimated charging time is displayed as “--" .

Unlock Charging Door in Emergency

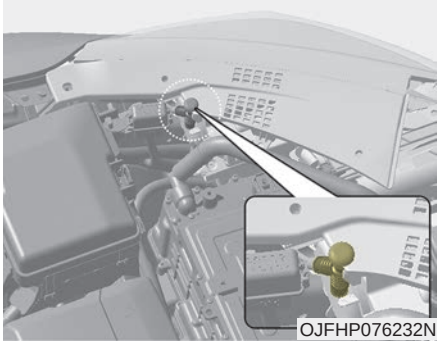
OJFHP076232N

If the charging door does not open due to battery discharge, open the hood and slightly pull the emergency cable which is located in headlamp cover as shown above.

The charging door will then open.

Charging Status

Checking Charging Status

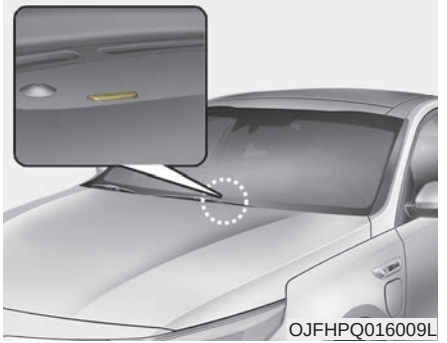
OJFHPQ016009L

You can monitor the charging status outside of the vehicle when charging the high-voltage battery.

Charging Status	Indicator
Charging in progress	Illuminates (green)
Fully charged	Off
Scheduled charging	Blinks (green) and then turns off
Malfunction	Blinks (red)

How to Disconnect a Normal Charger

1. The vehicle doors must be unlocked in order to be able to disconnect the charging connector. A lock system prevents charger cable disconnection when the vehicle's doors are locked.

⚠ CAUTION

In order to disconnect the charging connector, unlock the doors to unlatch the charging connector lock system. If not, the charging connector and the vehicle's charging inlet may be damaged.

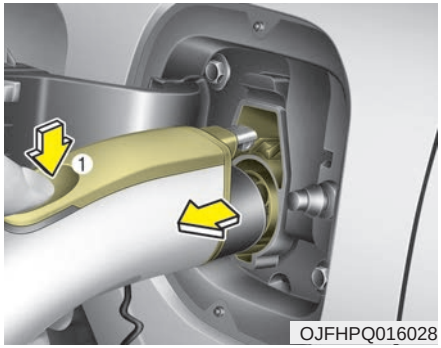

2. Hold the charging connector handle and pull it while pressing the release button(1).

⚠ CAUTION

When disconnecting the charging connector, do not try to disconnect it by force while not pressing the release button. This may damage the charging connector and vehicle charging inlet.

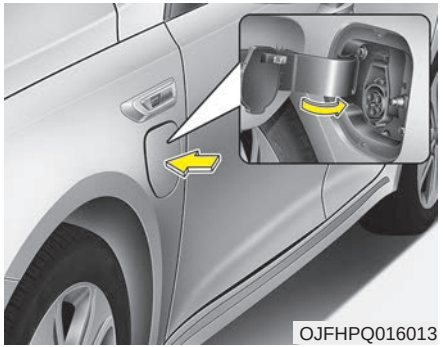
OJFHPQ016013

3. Make sure to securely close the charging door.

✻ NOTICE

- **Keep the charging connector and the charging plug clean and dry. The charging cable should also be kept dry.**
- **Use an air gun to blow any foreign substances from the charging connector and the charging plug.**

⚠ WARNING

Do not modify or disassemble the charging cable components. Doing so may cause a fire or an electric shock resulting in personal injuries.

Trickle Charger

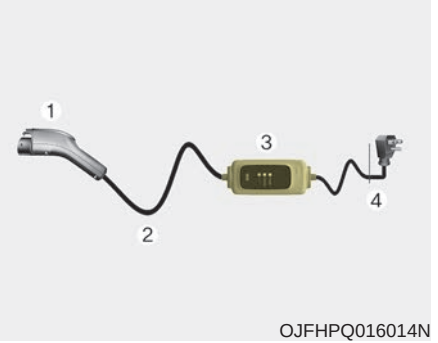

OJFHPQ016014N

Trickle charger can be used if Normal Charger is unavailable.

✻ ① : Charging connector
② : Charging cable
③ : Control box
④ : Cord and plug (cord set)

How to Connect Portable Charging Cable (ICCB: In-Cable Control Box)

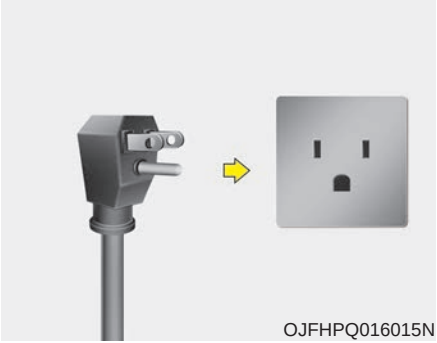
OJFHPQ016015N

1. Turn OFF all switches, move the shift lever to P (Park), and turn OFF the vehicle.
2. Connect the plug to a household electric outlet.

OJFHPQ016016L

3. Check if all LED lamps on the control box blinks for 0.5 seconds. Then, check if the power lamp (green) turns ON.

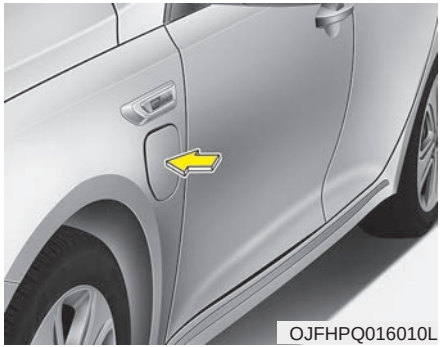
OJFHPQ016010L

4. Depress the brake pedal and apply the parking brake.
5. After unlocking doors, open the charging door by pressing it.

✻ NOTICE

The charging door does not open when the theft alarm system is armed.

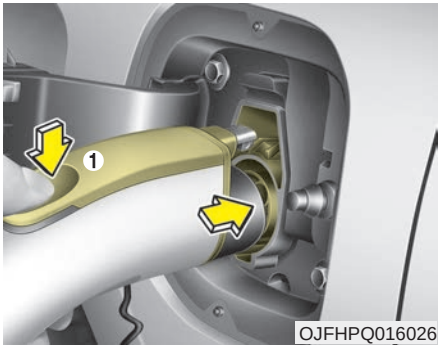

OJFHPQ016026

6. Remove any dust on the charging connector and charging inlet.
7. Hold the charging connector handle and insert it into the charging inlet while pressing the release button(1), until you hear a click sound. If it is not fully connected, improper connection between the charging connector and the charging terminals are a potential fire hazard.

OJFHPQ016016L

8. Charging starts automatically.

   Check if the power lamp and charging lamp (orange) are ON.

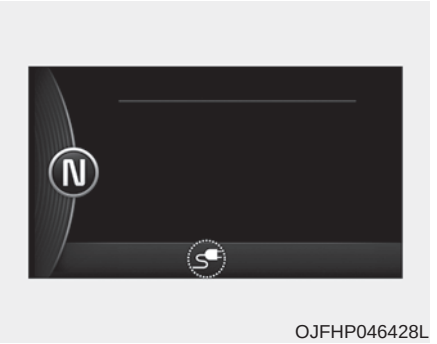
OJFHP046428L

9. Check if the charging cable connection indicator of the high voltage battery in the instrument cluster is turned ON.

   Charging does not occur when the indicator is OFF. When the charging connector is not connected properly, reconnect the charging cable to charge.

✻ NOTICE

- **The charging is in progress only when the shift lever is in P (Park). Charging the battery with the Engine Start/Stop button in the ACC position is possible. However, it may discharge the 12-V battery. Thus, if possible, charge the battery with the Engine Start/Stop button in the OFF position.**
- **Moving the shift lever from P (Park) to R (Reverse)/N(Neutral)/D (Drive) stops the charging process. To restart the charging process, move the shift lever to P (Park), press the Engine Start/Stop button to the OFF position, and disconnect the charging cable. Then, connect the charging cable and restart the vehicle again.**

OJFHP048429N

10. After charging has started, the estimated charging time is displayed on the instrument cluster for about 1 minute. It is also displayed when the driver's door is opened with charging in progress. When scheduled charging is set, the estimated charging time is displayed as "--".

Checking Charging Status

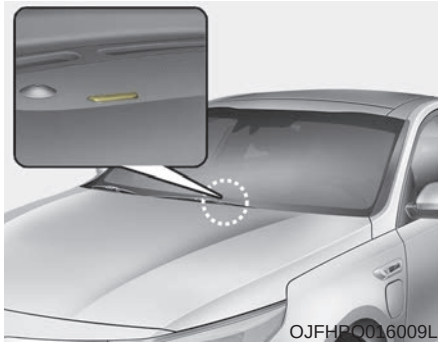
OJFHPQ016009L

You can monitor the charging status outside of the vehicle when charging the high-voltage battery.

Charging Status	Indicator
Charging in progress	Illuminates (green)
Fully charged	Off
Scheduled charging	Blinks (green) and then turns off
Malfunction	Blinks (red)

Charge cable storage

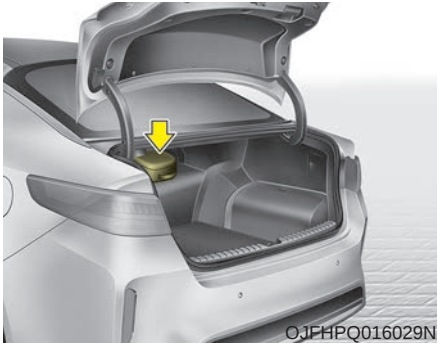

We recommend that the trickle charger cable be put in a storage box after use. Keep the storage box above the main battery pack inside the trunk.

CHARGING THE PLUG-IN HYBRID VEHICLE (CONT.)

Charging Status Indicator Lamp for Portable Charging Cable

Category	Lamp ON	Lamp OFF	Blinking
LED Status	●	-	⦿

Charger Status		Control Box ON/OFF Status	Power	Charge	Fault	Status / Diagnosis / Countermeasure
Initial Preparation Mode		OJFHPQ016017L	●	●	●	When applying power to the initial ICCB wall
Charging Preparation Mode		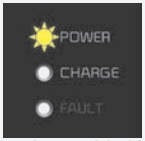 OJFHPQ016018L	●	-	-	When ICCB charging connector is not connected to the vehicle, or connected but charging status is in Standby mode
Charging Mode		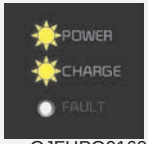 OJFHPQ016019L	●	●	-	Charging
Failure	ICCCB failure or electrical leakage detected	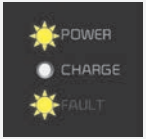 OJFHPQ016020L	●	-	⦿	Stop charging immediately and we recommend you contact an authorized Kia dealer for ICCB check.
			●	-	●	

How to Disconnect Portable Charging Cable

(ICCB: In-Cable Control Box)

1. Before disconnecting the charging connector, make sure the doors are unlocked. When the door is locked, the charging connector lock system will not allow disconnection.

⚠ CAUTION

In order to disconnect the charging connector, unlock the doors to unlatch the charging connector lock system. If not, the charging connector and the vehicle's charging inlet may be damaged.

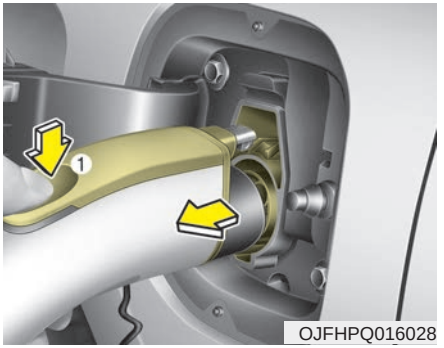

OJFHPQ016028

2. Hold the charging connector handle and pull it while pressing the release button(1).
3. Make sure to securely close the charging door.

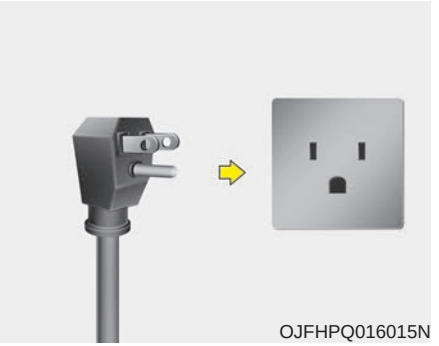
OJFHPQ016015N

4. Disconnect the plug from the household electric outlet. Do not pull the cable when disconnecting the plug.
5. Close the protective cover for the charging connector so that foreign material cannot get into the terminal.
6. Put the charging cable inside the cable compartment to protect it.

Precautions for Portable Charging Cable (ICCB: In-Cable Control Box)

- Use a portable charging cable that is certified by Kia.
- Do not try to repair, disassemble, or adjust the portable charging cable.
- Do not use an extension cord or adapter.
- Stop using immediately if failure warning light occurs.
- Do not touch the plug and charging connector with wet hands.
- Do not touch the terminal part of the normal charging connector and the normal charging inlet on the vehicle.
- Do not connect the charging connector to voltage that does not comply with regulations.
- Do not use the portable charging cable if it is worn out, exposed, or there exists any type of damage on the portable charging cable.
- If the ICCB case and normal charging connector is damaged, cracked, or the wires are exposed in any way, do not use the portable charging cable.
- Do not let children operate or touch the portable charging cable.
- Keep the control box free of water.
- Keep the normal charging connector or plug terminal free of foreign substances.
- Do not step on the cable or cord. Do not pull the cable or cord and do not twist or bend it.
- Do not charge when there is lightning.
- Do not drop the control box or place a heavy object on the control box.
- Do not place an object that can generate high temperatures near the charger when charging.
- Charging with a worn out or damaged household electric outlet can result in a risk of electric shock If you have doubts about the household electric outlet condition, have it checked by a licensed electrician.
- Stop using the portable charging cable immediately if the household electric outlet or any components are overheating or smell burning.

Changing plug-in hybrid mode

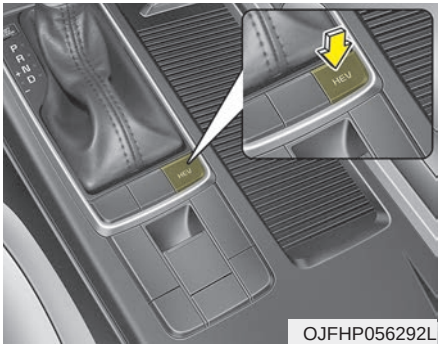

OJFHP056292L

Pressing the HEV button changes he plug-in hybrid system modes, as described:

- Briefly pressed:
  EV mode ↔ HEV mode
- Press and hold:
  It changes to the HEV-charging mode.

When the HEV button is pressed in the HEV-charging mode, the mode changes as below.

- Briefly pressed: It changes to the CS mode.
- Press and hold: It remains in the HEV-charging mode.

Plug-in hybrid mode indicator

- CD (Charge Depleting, Electric) mode

OJFHP048420N

: The high-voltage (hybrid) battery is used to drive the vehicle.

- CS (Charge Sustaining, Hybrid) mode

OJFHP048421N

: The high-voltage (hybrid) battery and gasoline engine is used to drive the vehicle.

- HEV-charging mode

OJFHP048422N

: Gasoline engine is used to drive the vehicle and charge the high-voltage (hybrid) battery

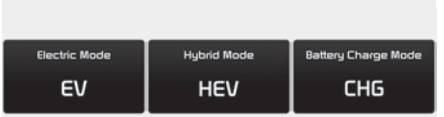

OJFHP046425L/OJFHP046426L/OJFHP046427L

A corresponding message is displayed to indicate the selected mode.

Warning and indicator lights

Ready Indicator

This indicator illuminates :

When the vehicle is ready to be driven.

- ON : Normal driving is possible.
- OFF : Normal driving is not possible, or a problem has occurred.
- Blinking : Emergency driving.

When the ready indicator goes OFF or blinks, there is a problem with the system. In this case, have your vehicle inspected by an authorized Kia dealer.

Hybrid system warning light

This warning light illuminates:

When there is a malfunction with the hybrid system.

In this case, have your vehicle inspected by an authorized Kia dealer.

When the warning light illuminates while driving, or does not go OFF after starting the vehicle, have your vehicle inspected by an authorized Kia dealer.

EV Mode Indicator

This indicator illuminates when the vehicle is driven by the electric motor.

Charging Cable Connection Indicator (Plug-in hybrid)

This indicator illuminates in red when the charging cable is connected.

Coasting guide (if equipped)

A chime will sound and the coasting guide indicator will blink four times to inform the driver when to take the foot off from the accelerator by anticipating a decelerating event* based on the analysis of driving routes and road conditions according to the navigation system. It encourages the driver to remove the driver's foot from the pedal and allow coasting down the road with EV motor only.

This helps prevent unnecessary fuel consumption and may increases fuel efficiency.

❊ Example of a deceleration event is going down an extended hill, approaching a toll booth, and approaching reduced speed zones.

• User settings

Press the Engine Start/Stop button and put the shift lever in P(Park). In the User Settings Mode, select Driving Assist, Coasting Guide, and then On to turn on the system. Cancel the selection of coasting guide to turn off the system. For the explanation of the system, press and hold the [OK] button.

• Operation conditions

To activate the system, take the following procedures. Enter your destination information on the navigation and select the driving route. Select the ECO mode in the Integrated Driving Control System. Then, satisfy the following.

- The driving speed should be between 60 km/h (37 mph) and 160 km/h (99 mph).

❊ The operating speed may vary due to difference between instrument cluster and navigation effected by tire inflation level.

✻ NOTICE

Coasting guide is only a supplemental system to assist with fuel-efficient driving in certain situations. Thus, the operating conditions may be different in accordance with traffic/road conditions (i.e. driving in a traffic jam, driving on a slope, driving on a curve). Thus, take the actual driving conditions into consideration, such as distances from the vehicles ahead/behind, while referring to the coasting guide system as guidance.

Unplug vehicle to start (Plug-in hybrid)

This message is displayed when you start the engine without unplugging the charging cable. Unplug the charging cable, and then start the vehicle.

Shift to P to charge (Plug-in hybrid)

This message is displayed when the charging connector is plugged with the shift lever in R (Reverse), N (Neutral) or D (Drive). Move the shift lever to P (Park) and re-start the charging process.

Remaining time (Plug-in hybrid)

This message is displayed to notify the remaining time to fully charge the battery.

Battery charged. Maintaining current mode (Plug-in hybrid)

This message is displayed when the vehicle is unable to convert to charging mode even when pressing and holding the HEV button during EV/HEV mode driving because the high-voltage (hybrid) battery is already fully charged.

Low battery. Maintaining Hybrid mode (Plug-in hybrid)

This message is displayed when the vehicle is unable to convert to EV mode even when pressing the HEV button during HEV mode driving due to insufficient high-voltage (hybrid) battery level.

Low battery temp. Maintaining current (Plug-in hybrid)

This message is displayed when the vehicle is unable to convert to EV mode even when pressing the HEV button during HEV mode driving due to low battery temperature.

Charging complete. Switching to Hybrid (Plug-in hybrid)

This message is displayed when the vehicle automatically converts to HEV mode due to completed battery charging during charging mode driving.

Charger Error! (Plug-in hybrid)

This message is displayed when the charging failed due to an external charger error.

This message is for and applies to the Normal charger. The purpose of this message informs you there is an issue with the charger. Recommend to use another charger.

Low/High System Temp. Maintaining Hybrid (Plug-in hybrid)

This message is displayed when the vehicle is unable to convert to EV mode even when pressing the HEV button during HEV mode driving due to low/high system temperature.

Switching to Hybrid mode to allow heating (Plug-in hybrid)

- When the coolant temperature is lower than -14 °C (57 °F), and you turn the climate control On for heating, this message will be displayed in the cluster. Then, the vehicle will automatically switch to HEV mode.
- When the coolant temperature is higher than -14 °C (57 °F), or you turn the climate control Off, the vehicle will automatically return to EV mode.

Wait until fuel door opens (Plug-in hybrid)

This message is displayed when you attempt to open the fuel filler lid with the fuel tank pressurized. Wait until the fuel tank is depressurized.

✻ NOTICE

- **It may take up to 20 seconds to open fuel filler lid.**
- **When the fuel filler lid is frozen and does not open after 20 seconds at freezing temperature, slightly tap the fuel filler lid and then attempt to open it.**

Fuel door open (Plug-in hybrid)

This message is displayed when the fuel filler lid is opened.

Also means "Ready to refuel".

Check fuel door (Plug-in hybrid)

This message is displayed when the fuel filler lid is open or an abnormality has occurred.

Refuel after stopping (Plug-in hybrid)

This message is displayed when the fuel filler lid open button is pressed when a vehicle equipped with a plug-in hybrid seal-type fuel tank is in motion (vehicle speed is greater than 0 km/h(mi/h)).

Disconnect charging cable before opening fuel door (Plug-in hybrid)

This message is displayed when you press fuel filler lid open button while charging.

Fuel lid does not open when charging cable is connected to vehicle.

Charging Door Open (Plug-in hybrid)

This message indicates that the charging door is open while in driving-ready state to encourage you to inspect and close the door.

(Driving with the charging door open may result in moisture inflow or damage. This message is used to prevent such occurrences.)

EV / HEV/ CHG modes (Plug-in hybrid)

OJFHP046425L

OJFHP046426L

OJFHP046427L

A corresponding message is displayed when a mode is selected by pressing the HEV button.

ENERGY FLOW HYBRID/PLUG-IN HYBRID VEHICLE

Kia hybrid system notifies the driver of energy flow in various operating modes. Eleven Modes show the driver the current operating condition.

Vehicle Stop

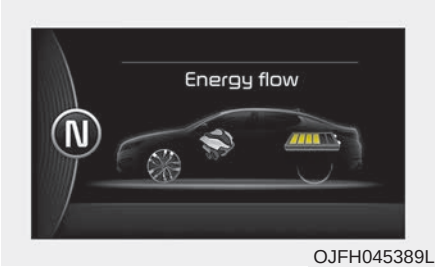

OJFH045389L

The mode means the vehicle is at a complete stop.

(There is no energy flow.)

EV Propulsion

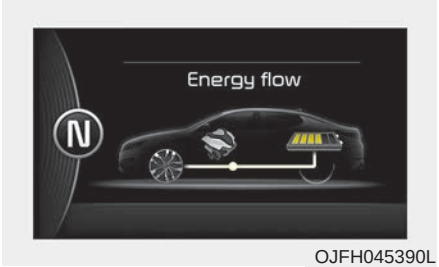

OJFH045390L

Electric power is used to move the vehicle. (Battery ➞ Wheel)

Power Assist

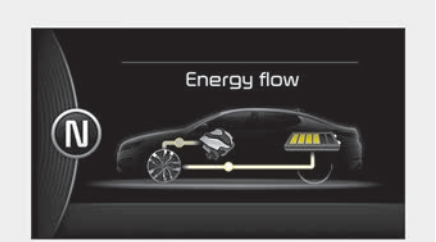

OJFH045392L

Electric and Engine power are used to move the vehicle.

(Battery & Engine ➞ Wheel)

Engine Only Propulsion

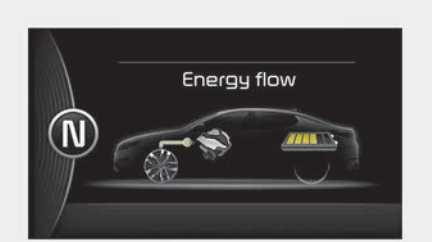

OJFH045391L

Engine power is used to move the vehicle. (Engine ➞ Wheel)

Engine Generation

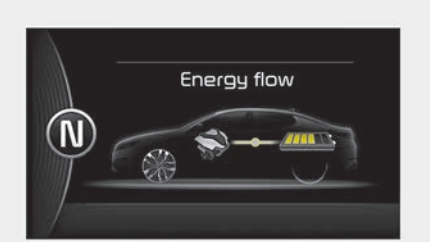

OJFH045393L

Vehicle is stopped with the Engine charging the hybrid battery.

(Engine ➞ Battery)

ENERGY FLOW HYBRID/PLUG-IN HYBRID VEHICLE

Regeneration

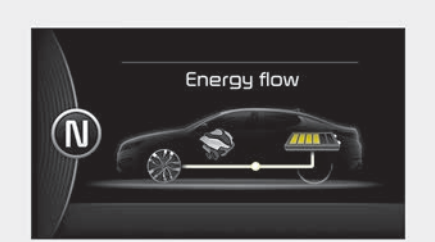

OJFH045394L

Hybrid battery is being charged by regenerative braking.

(Wheel ➞ Battery)

Engine Brake

OJFH045397L

The vehicle is being slowed by engine compression.

(Wheel ➞ Engine)

Power Reserve

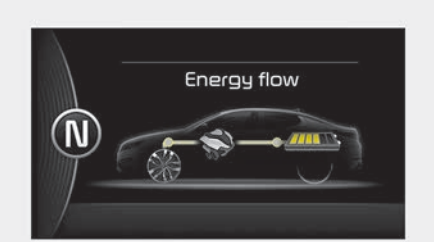

OJFH045395L

Engine is both driving the vehicle and charging the hybrid battery.

(Engine ➞ Wheel & Battery)

Engine Generation/Regeneration

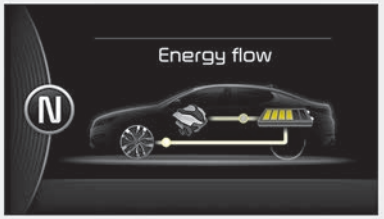

OJFH045396L

The engine and regenerative brake system charge up the high-voltage battery.

(Engine & Wheel ➞ Battery)

Engine Generation/Motor Drive

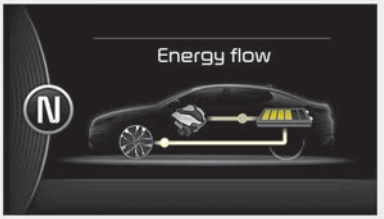

OJFH045398L

The vehicle is being slowed by engine compression and regenerative braking. The hybrid battery is being charged by regenerative braking.

(Engine ➞ Battery ➞ Wheel)

Engine Brake/Regeneration

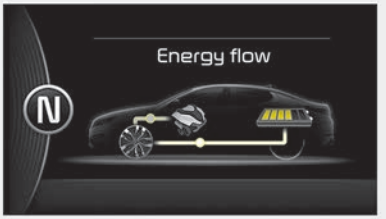

OJFH045399L

The engine compression can be used to slow the vehicle. The regenerative braking system can be used to charge the hybrid system.

(Wheel ➞ Engine & Battery)

Starting the Hybrid System

1. Carry the smart key into the vehicle.
2. Make sure the parking brake is firmly applied.
3. Place the shift lever in the P(Park) position.

   In N (neutral) position, you cannot start the vehicle.
4. Depress the brake pedal.
5. Press the engine start/stop button.
6. The engine should be started without pressing the accelerator. In extremely cold weather or after the vehicle has not been operated for several days, let the engine warm up without depressing the accelerator.
   - Even if the smart key is in the vehicle, if it is far away from you, the engine may not start.
   - When the engine start/stop button is in the ACC or ON position and if any door is open, the system checks for the smart key. If the smart key is not in the vehicle, the warning, "Key is not in vehicle" will come on, and if all doors are closed, the chime will also sound for about 5 seconds. Keep the smart key in the vehicle when using the ACC position or if the vehicle engine is on. The indicator will turn off while the vehicle is moving.

If the starting procedure is followed, the "" symbol on the instrument cluster will turn on. For more details, Please check chapter 6.

ECONOMICAL and SAFE OPERATION of Hybrid system

- Drive smoothly. Accelerate at a moderate rate and maintain a steady cruising speed. Don't make "jack-rabbit" starts. Don't race between stoplights.

  Avoid heavy traffic whenever possible. Always maintain a safe distance from other vehicles so you can avoid unnecessary braking. This also reduces brake wear.
- The regenerative brake generates energy when the vehicle decelerates.
- When the hybrid battery power is low, the hybrid system automatically recharges the hybrid battery.
- When the engine runs in "N" position, the hybrid system cannot generate electricity. The hybrid battery cannot recharge in "N" position. Please refer to chapter 6.

✻ NOTICE

When the hybrid system is in READY mode, the engine will automatically start and stop as needed. The " 🚗 " symbol will illuminate in the cluster when the system is operational.

⚠ CAUTION - Extended cranking

Do not crank the engine for a prolonged period of time without the engine starting. This could result in damage to the HEV battery and become totally discharged.

COMPONENTS OF THE HYBRID/PLUG-IN HYBRID VEHICLE

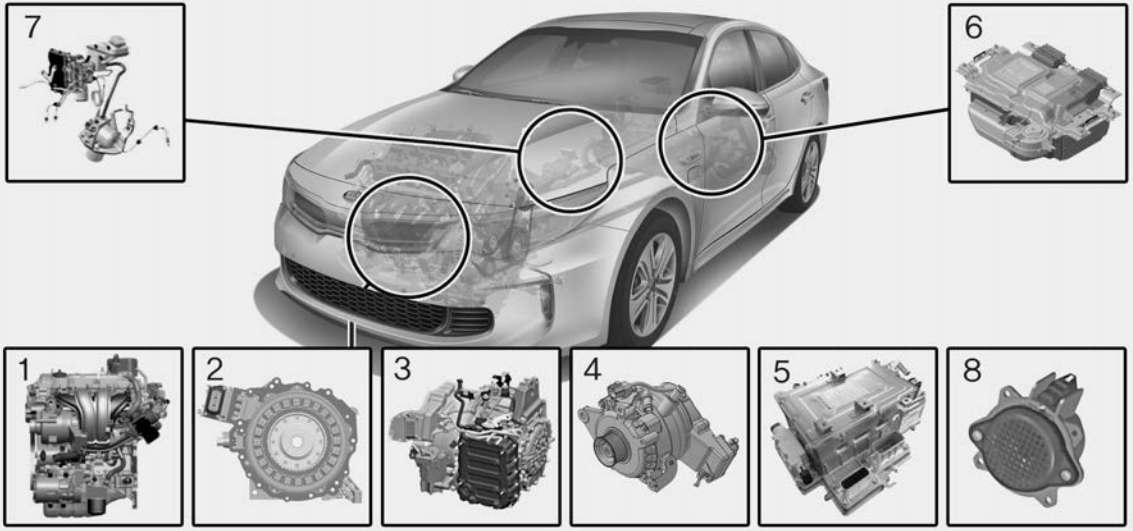

1. Engine : 2.0L
2. Motor : 38kW (Hybrid)/50kW (Plug-in hybrid)
3. Transmission : 6AT
4. Hybrid starter generator (HSG)
5. HPCU (Hybrid Power Control Unit)
6. High voltage battery system
7. Regenerative brake system
8. Virtual Engine Sound System (VESS)

❊ The actual shape may differ from the illustration.

OJFHPQ016001N

The Hybrid battery uses high-voltage to operate the electric motor and other components. High voltage is dangerous if touched.

Your vehicle is equipped with orange colored insulation which covers over the high voltage components to protect people from electric shock. High voltage warning labels are attached to some system components as additional warnings. Your vehicle is recommended to be serviced by an authorized Kia dealer.

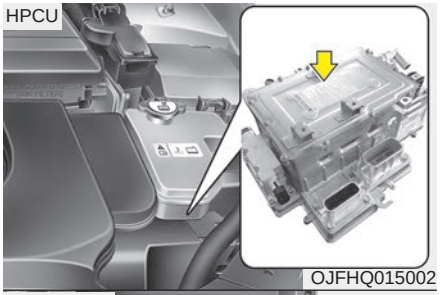

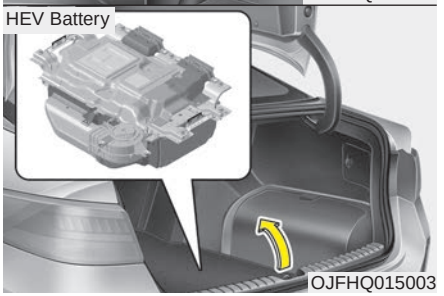

⚠ WARNING - High voltage components

Never touch orange or high-voltage labeled components including wires, cables, and connectors. If the insulators or covers are damaged or removed, severe injury or death from electrocution may occur.

⚠ WARNING - Touching HPCU

When replacing the fuses in the engine compartment, never touch the HPCU. The HPCU carries high voltage. Touching the HPCU could result in electrocution, serious injury, or death.

⚠ CAUTION - High Voltage Battery Damage

When loading your vehicle, be careful transporting items in a manner that could damage the high voltage battery. Do not store items on top of the high voltage battery or overload the trunk area. Such actions may ultimately damage the high voltage battery unit.

⚠ CAUTION - Carrying Liquids in Trunk

Do not load large amounts of liquid in open containers in the vehicle. If spilled onto the HEV battery, the liquid may cause a short or further damage to the battery.

Motor

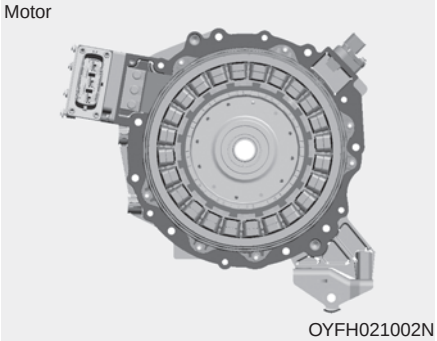

OYFH021002N

⚠ WARNING - Battery Electrolyte

As with all batteries, avoid fluid contact with the Hybrid battery. If the battery is damaged and if electrolyte comes in contact with your body, clothes or eyes, immediately flush with a large quantity of fresh water.

Have your eyes examined by a doctor as soon as possible.

⚠ WARNING - After-market Battery Charger

Do not use an after-market battery charger to charge the Hybrid battery. Doing so may result in death or serious injury.

✻ NOTICE - Prolonged parking

Prolonged parking might cause battery discharge and operation failure due to natural discharge. Driving the vehicle approximately once every 2 months, more than 15 km (9 mile) is recommended. The battery will be charged automatically when driving the vehicle.

⚠ WARNING - High Waters

- **Avoid high waters as this may result in your vehicle becoming saturated with water and could compromise the high voltage components.**
- **Do not touch any of the high voltage components within your vehicle if your vehicle has been submerged in water equal to half of the vehicle height. Touching high voltage components once submerged in water could result in severe burns or electric shock that could result in death or serious injury.**

⚠ CAUTION - Cleaning Engine

When you clean the engine compartment, do not wash using water. Water may cause electric arcing to occur and damage electronic parts and components.

⚠ WARNING - Exposure to High Voltage

- **High voltage in the hybrid battery system is very dangerous and can cause severe burns and electric shock. This may result in serious injury or death.**
- **For your safety, never touch, replace, dismantle or remove any portion of the hybrid battery system including components, cables and connectors.**

⚠ WARNING - Use of Water or Liquids

If water or liquids come into contact with the hybrid system components, and you are also in contact with the water, severe injury or death due to electrocution may occur.

⚠ WARNING - Hot Components

When the hybrid battery system operates, the HEV battery system can be hot. Heat burns may result from touching even insulated components of the HEV system.

Safety plug

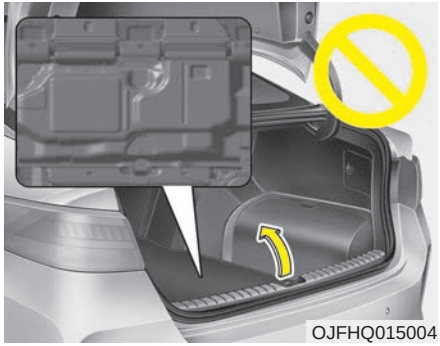

⚠ WARNING - Safety Plug

Never touch the safety plug. Safety plug is attached to high voltage hybrid battery system. Touching safety plug will result in death or serious injury. Service personnel should follow procedure in service manual.

Some Special Features of the Hybrid Vehicle.

Hybrid vehicles sound different than gasoline engine vehicles. When the hybrid system operates, you may hear a sound from the hybrid battery system behind the rear seat. If you apply the accelerator pedal rapidly, you may hear a sound. When you apply the brake pedal, you may hear a sound from the regenerative brake system. When the hybrid system is turned off or on, you may hear a sound in the engine compartment. If you depress the brake pedal repeatedly when the hybrid system is turned on, you may hear a sound in the engine compartment. None of these sounds indicate a problem.

They are characteristics of hybrid vehicles.

When the hybrid system is turned on, the engine may run. This does not indicate a malfunction. If the "" symbol is on, the hybrid system is operating. Even if the gasoline engine is off, you can operate the vehicle.

The HEV system may emit electromagnetic waves which can affect the performance of electronic devices appliances, such as laptop computers, which are not part of the vehicle design.

If you park the vehicle for a long time, the hybrid system will discharge. You need to drive the vehicle several times per month to maintain a charge.

When you start the hybrid system in the "P" transmission position, the "" symbol is illuminated in the cluster. The driver can drive the vehicle even if the engine is stopped.

⚠ WARNING - Turning off HEV system

When you leave the vehicle, you should turn off the hybrid system. If you depress the accelerator pedal by mistake and the vehicle is not in the "P" position, the vehicle will accelerate. This may result in serious injury or death.

Virtual Engine Sound System (VESS)

The Virtual Engine Sound System generates a simulated engine sound for pedestrians to hear the vehicle while at low speeds in EV mode

⚠ WARNING - Interference with electronic medical devices

Electromagnetic waves that are generated from the charger can impact medical electric devices such as an implantable cardiac pacemaker. When using such medical electric devices, ask your medical professional and the device manufacturer whether charging your electric vehicle will impact the operation of the medical electric devices.

High Voltage Battery Air Intake

Hybrid battery air intake

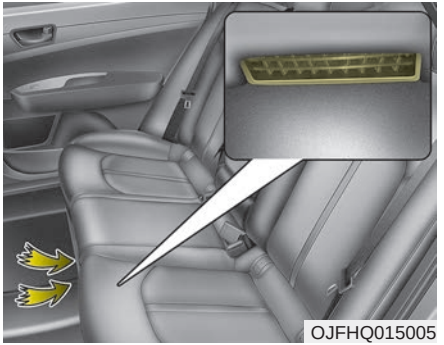

The hybrid battery air intake is located on the bottom of the rear seats. The air intake cools down the hybrid battery.

When the hybrid battery air intake is blocked, the hybrid battery may overheat. Do not obstruct the air intake with any other objects.

Plug-in Hybrid Vehicle

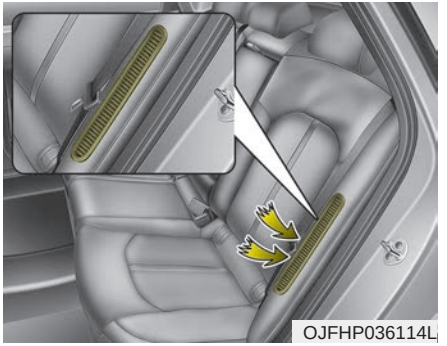

The high-voltage battery air intake is located on the left side of the rear seats. The air intake cools down the high-voltage battery.

When the high-voltage battery air intake is blocked, the high-voltage battery may overheat and the vehicle performance may become limited and set a hybrid warning lamp. Do not obstruct the air intake with any other objects.

⚠ WARNING - Air Intake

- **Blocking the air intake behind the rear seats may damage the HEV battery.**
- **Do not allow any water into the air intake even when cleaning. If any water enters the air intake, the Hybrid battery may cause an electric shock which can cause serious injury or death due to electrocution.**

If An Accident Occurs

- Avoid the engine compartment.
- Avoid making contact with any orange or high voltage wires, cables, or components.
- Assume that a high voltage component is exposed and move away from the vehicle as promptly as possible.
- Refer to Chapter 7 for towing information.

✻ NOTICE

- **If a small scale fire occurs, use a fire extinguisher rated ABC or BC for electrical fires.**
  If it is impossible to extinguish the fire in the early stage, remain a safe distance from the vehicle and immediately call your local fire emergency responders. Also, advise them that a hybrid vehicle is involved.
  If the fire spreads to the high voltage battery, large amount of water is needed to put out the fire.
  Using small amount of water or fire extinguishers not meant for electrical fires could cause serious injury or death from electrical shocks.
- **If you need towing, refer to chapter 7.**

If a vehicle accident occurs:

1. Stop the vehicle and shift the transmission into "P" position.

   And then depress the parking brake.
2. Turn off the Hybrid system by pushing the Engine Start/Stop Button.
3. Step away from the vehicle to a safe place.
4. Call emergency services for help and let them know the vehicle is a Hybrid vehicle.

If an immersion in water occurs:

If your vehicle was flooded and has soaked carpeting or water on the flooring, you should not try to start the Hybrid system. Have the car towed to an authorized Kia dealer.

⚠ WARNING

If a submersion in water occurs:

If your vehicle was flooded and has soaked carpeting or water on the flooring, you should not try to start the Hybrid system. Never touch the high voltage cables, connectors and package modules, because an electrical shock may occur causing injury or death. High Voltage cables are orange in color.

In this case, have the vehicle be towed to and inspected by an authorized Kia dealer.

When the hybrid vehicle shuts off

When the high voltage battery or 12-volt battery discharges, or fuel tank is empty, the hybrid system may not operate.

If the Hybrid system stops operating while the vehicle is moving, reduce the vehicle speed gradually. Pull your vehicle off the road to a safe area, and shift the transmission in to Park (P) position and;

1. Turn on the hazard warning flashers.
2. Set the start button at OFF, and try to start the Hybrid system by applying the brake pedal and pushing the start button.
3. If the Hybrid system will not operate, refer to "EMERGENCY STARTING" in chapter 7.

Before you try to jump start the vehicle, confirm the fuel level. If the fuel level is low, add more fuel before attempting an emergency start.

⚠ WARNING - Accident Vehicle

Never touch electric wires or cables. If exposed electric wires or cables are visible inside or outside of your vehicle, an electric shock may occur.

⚠ WARNING - Putting out fire

Never use a small quantity of water to put out a fire in your vehicle. If a fire occurs, evacuate the car immediately and contact the fire department.

Kia, THE COMPANY

Thank you for becoming the owner of a new Kia vehicle.

As a global car manufacturer focused on building high-quality vehicles with exceptional value, Kia Motors is dedicated to providing you with a customer service experience that exceeds your expectations.

All information contained in this Owner's Manual was accurate at the time of publication. However, Kia reserves the right to make changes at any time so that our policy of continual product improvement can be carried out.

This manual applies to all trims of this vehicle and includes images, descriptions, and explanations of optional as well as standard equipment. As a result, some material in this manual may not be applicable to your specific Kia vehicle. Some images are shown for illustration only and may show features that differ from those on your vehicle.

Drive safely and enjoy your Kia!

Thank you for choosing a Kia vehicle.

When you require service, remember that your Kia dealer knows your vehicle best. Your dealer has factory-trained technicians, recommended special tools and genuine Kia replacement parts. It is dedicated to your complete customer satisfaction.

Because subsequent owners require this important information as well, this publication should remain with the vehicle if it is sold.

This manual will familiarize you with operational, maintenance and safety information about your new vehicle. It is supplemented by a Warranty and Consumer Information manual that provides important information on all warranties regarding your vehicle.

We urge you to read these publications carefully and follow the recommendations to help assure enjoyable and safe operation of your new vehicle.

Kia offers a great variety of options, components and features for its various models. Therefore, some of the equipment described in this manual, along with the various illustrations, may not be applicable to your particular vehicle.

The information and specifications provided in this manual were accurate at the time of printing. Kia reserves the right to discontinue or change specifications or design at any time without notice and without incurring any obligation. If you have questions, always check with your Kia dealer.

We assure you of our continuing interest in your motoring pleasure and satisfaction in your Kia vehicle.

© 2018 Kia Canada Inc.

All rights reserved. Reproduction by any means, electronic or mechanical, including photocopying, recording, or by any information storage and retrieval system or translation in whole or part is not permitted without written authorization from Kia Canada Inc..

Printed in Korea

HOW TO USE THIS MANUAL

We want to help you get the greatest possible driving pleasure from your vehicle. Your Owner's Manual can assist you in many ways. We strongly recommend that you read the entire manual. In order to minimize the chance of death or injury, you must read the WARNING and CAUTION sections in the manual.

Illustrations complement the words in this manual to best explain how to enjoy your vehicle. By reading your manual, you will learn about features, important safety information, and driving tips under various road conditions.

The general layout of the manual is provided in the Table of Contents. Use the index when looking for a specific area or subject; it has an alphabetical listing of all information in your manual.

Sections: This manual has nine sections plus an index. Each section begins with a brief list of contents so you can tell at a glance if that section has the information you want.

You will find various WARNINGs, CAUTIONs, and NOTICEs in this manual. These WARNINGs were prepared to enhance your personal safety. You should carefully read and follow ALL procedures and recommendations provided in these WARNINGs, CAUTIONs and NOTICEs.

⚠ WARNING

A WARNING indicates a situation in which harm, serious bodily injury or death could result if the warning is ignored.

⚠ CAUTION

A CAUTION indicates a situation in which damage to your vehicle could result if the caution is ignored.

✻ NOTICE

A NOTICE indicates interesting or helpful information is being provided.

TABLE OF CONTENTS

Introduction	1
Your vehicle at a glance	2
Safety features of your vehicle	3
Features of your vehicle	4
Audio system	5
Driving your vehicle	6
What to do in an emergency	7
Maintenance	8
Specifications & Consumer information	9
Index	I

Introduction

1

Fuel requirements 1-2
• Gasoline containing alcohol and methanol. 1-2
• Do not use methanol 1-4
• Fuel additives. 1-4
• Operation in foreign countries. 1-4
Vehicle break-in process 1-5
HEV/PHEV powertrain. 1-5
Vehicle data collection and event data recorders. . 1-6

FUEL REQUIREMENTS

Your new vehicle is designed to use only unleaded fuel having a pump octane number ((R+M)/2) of 87 (Research Octane Number 91) or higher. (Do not use methanol blended fuels.)

Your new vehicle is designed to obtain maximum performance with UNLEADED FUEL, as well as minimize exhaust emissions and spark plug fouling.

Never add any fuel system cleaning agents to the fuel tank other than what has been specified. (Consult an authorized Kia dealer for details.)

- Tighten the cap until it clicks one time, otherwise the Check Engine light will illuminate.

⚠ WARNING - Refueling

- **Do not "top off" after the nozzle automatically shuts off. Attempts to force more fuel into the tank can cause fuel overflow onto you and the ground causing a risk of fire.**
- **Always check that the fuel cap is installed securely to prevent fuel spillage, especially in the event of an accident.**

Gasoline containing alcohol and methanol

Gasohol, a mixture of gasoline and ethanol (also known as grain alcohol), and gasoline or gasohol containing methanol (also known as wood alcohol) are being marketed along with or instead of leaded or unleaded gasoline.

Pursuant to EPA regulations, ethanol may be used in your vehicle.

Do not use gasohol containing more than 15% ethanol, and do not use gasoline or gasohol containing any methanol. Ethanol provides less energy than gasoline and it attracts water, and it is thus likely to reduce your fuel efficiency and could lower your MPG results.

Methanol may cause drivability problems and damage to the fuel system, engine control system and emission control system.

Discontinue using gasohol of any kind if drivability problems occur.

Vehicle damage or drivability problems may not be covered by the manufacturer's warranty if they result from the use of:

1. Gasoline or gasohol containing methanol.
2. Leaded fuel or leaded gasohol.
3. Gasohol containing more than 15% ethanol.

"E85" fuel is an alternative fuel comprised of 85 percent ethanol and 15 percent gasoline, and is manufactured exclusively for use in Flexible Fuel Vehicles. “E85” is not compatible with your vehicle. Use of “E85” may result in poor engine performance and damage to your vehicle's engine and fuel system. Kia recommends that customers do not use fuel with an ethanol content exceeding 15 percent.

✻ NOTICE

Your New Vehicle Limited Warranty does not cover damage to the fuel system or any performance problems caused by the use of “E85” fuel.

✻ NOTICE

Never use any fuel containing methanol. Discontinue use of any methanol containing product which may inhibit proper drivability.

Other fuels

Using fuels that contain Silicone (Si), MMT (Manganese, Mn), Ferrocene (Fe), and other metalic additives, may cause vehicle and engine damage or cause misfiring, poor acceleration, engine stalling, catalyst melting, clogging, abnormal corrosion, life cycle reduction, etc.

Also, the Malfunction Indicator Lamp (MIL) may illuminate.

✻ NOTICE

Damage to the fuel system or performance problem caused by the use of these fuels may not be covered by your New Vehicle Limited Warranty.

Use of MTBE

Kia recommends avoiding fuels containing MTBE (Methyl Tertiary Butyl Ether) over 15.0% vol. (Oxygen Content 2.7% weight) in your vehicle.

Fuel containing MTBE over 15.0% vol. (Oxygen Content 2.7% weight) may reduce vehicle performance and produce vapor lock or hard starting.

✻ NOTICE

Your New Vehicle Limited Warranty may not cover damage to the fuel system and any performance problems that are caused by the use of fuels containing methanol or fuels containing MTBE (Methyl Tertiary Butyl Ether) over 15.0% vol. (Oxygen Content 2.7% weight.)

Gasoline containing MMT

Some gasoline contains harmful manganese-based fuel additives such as MMT(Methylcyclopentadienyl Manganese Tricarbonyl). Kia does not recommend the use of gasoline containing MMT. This type of fuel can reduce vehicle performance and affect your emission control system. The Malfunction Indicator Lamp on the cluster may come on.

Do not use methanol

Fuels containing methanol (wood alcohol) should not be used in your vehicle. This type of fuel can reduce vehicle performance and damage components of the fuel system, engine control system and emission control system.

Fuel Additives

Kia recommends that you use good quality gasolines treated with detergent additives such as TOP TIER Detergent Gasoline, which help prevent deposit formation in the engine. These gasolines will help the engine run cleaner and enhance performance of the Emission Control System. For more information on TOP TIER Detergent Gasoline, please go to the website (www.toptiergas.com)

For customers who do not use TOP TIER Detergent Gasoline regularly, and have problems starting or the engine does not run smoothly, additives that can be purchased separately may be added to the gasoline.

If TOP TIER Detergent Gasoline is not available, one bottle of additive should be added to the fuel tank at every 12,000 km (7,500 miles) or every engine oil change is recommended. Additives are available from your authorized Kia dealer along with information on how to use them. Do not mix other additives.

Operation in foreign countries

If you are going to drive your vehicle in another country, be sure to:

- Observe all regulations regarding registration and insurance.
- Determine that acceptable fuel is available.

VEHICLE BREAK-IN PROCESS

No special break-in period is needed. By following a few simple precautions for the first 1,000 km (600 miles) you may add to the performance, economy and life of your vehicle.

- Do not race the engine.
- While driving, keep your engine speed (rpm, or revolutions per minute) between 2,000 rpm and 4,000 rpm.
- Do not maintain a single speed for long periods of time, either fast or slow. Varying engine speed is needed to properly break-in the engine.
- Avoid hard stops, except in emergencies, to allow the brakes to seat properly.

HEV/PHEV POWERTRAIN

By following a few simple precautions for the first 1,000 km (600 miles) you may add to the performance, economy and life of your vehicle.

- Do not race the engine.
- Avoid hard stops, except in emergencies, to allow the brakes to seat properly.

VEHICLE DATA COLLECTION AND EVENT DATA RECORDERS

This vehicle is equipped with an event data recorder (EDR). The main purpose of an EDR is to record, in certain crash or near crash-like situations, such as an air bag deployment or hitting a road obstacle, data that will assist in understanding how a vehicle's systems performed. The EDR is designed to record data related to vehicle dynamics and safety systems for a short period of time, typically 30 seconds or less. The EDR in this vehicle is designed to record such data as:

- **How various systems in your vehicle were operating;**
- **Whether or not the driver and passenger safety belts were buckled/ fastened;**
- **How far (if at all) the driver was depressing the accelerator and/or brake pedal; and,**
- **How fast the vehicle was traveling.**

These data can help provide a better understanding of the circumstances in which crashes and injuries occur. NOTE: EDR data are recorded by your vehicle only if a non-trivial crash situation occurs; no data are recorded by the EDR under normal driving conditions and no personal data (e.g., name, gender, age, and crash location) are recorded. However, other parties, such as law enforcement, could combine the EDR data with the type of personally identifying data routinely acquired during a crash investigation.

To read data recorded by an EDR, special equipment is required, and access to the vehicle or the EDR is needed. In addition to the vehicle manufacturer, other parties, such as law enforcement, that have the special equipment, can read the information if they have access to the vehicle or the EDR.

Your vehicle at a glance

Exterior overview 2-2
Interior overview 2-4
Instrument panel overview 2-5
Engine compartment 2-6

EXTERIOR OVERVIEW

■ Front view

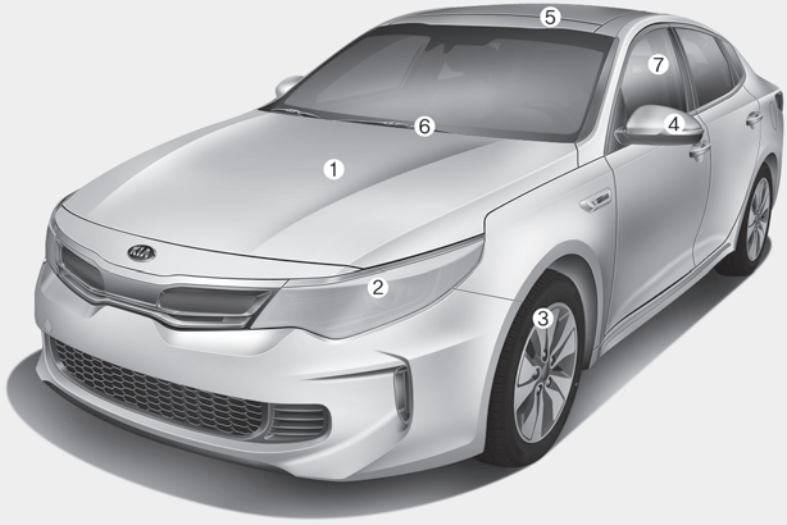

1. Hood 4-29
2. Head lamp (Features of your vehicle) ...4-104
   Head lamp (Maintenance).....8-74
3. Wheel and tire 8-39, 9-4
4. Outside rearview mirror 4-50
5. Panorama sunroof 4-38
6. Front windshield wiper blades
   (Features of your vehicle).....4-113
   Front windshield wiper blades
   (Maintenance) 8-32
7. Windows 4-24

❊ The actual shape may differ from the illustration.

OJFHP016001N

■ Rear view

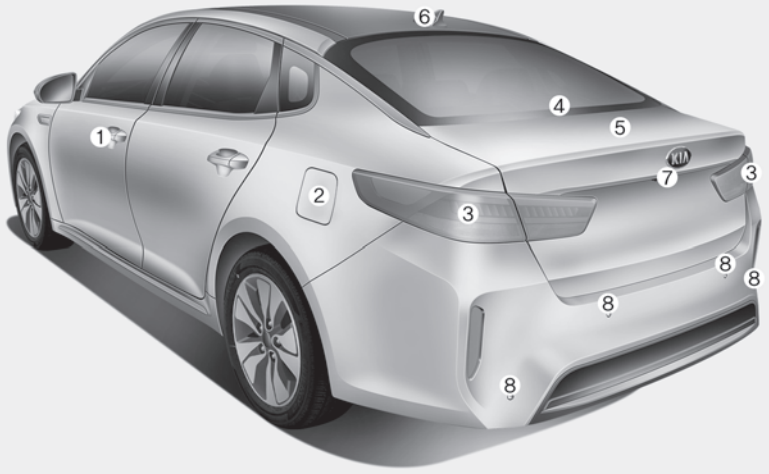

1. Door locks 4-14
2. Fuel filler lid.....4-31, 4-35
3. Rear combination lamp (Maintenance) 8-74
4. High mounted stop lamp (Maintenance) 8-84
5. Trunk.....4-19
6. Antenna.....5-2
7. Rearview monitor 4-102
8. Parking distance warning-reverse 4-99

❊ The actual shape may differ from the illustration.

OJFH018002L

INTERIOR OVERVIEW

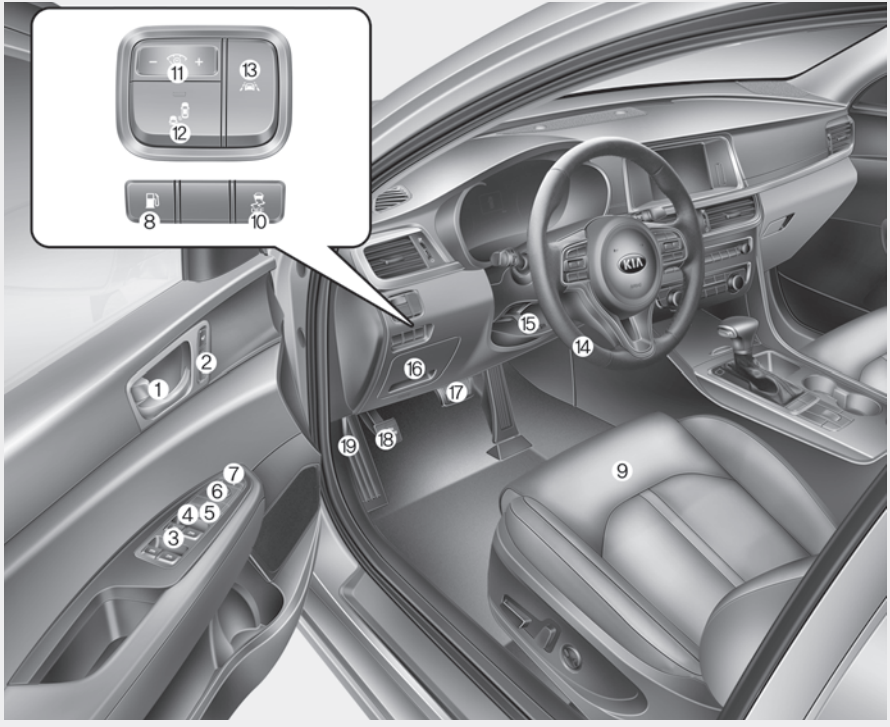

1. Inside door handle 4-15
2. Driver position memory button 3-11
3. Power window switch.....4-24
4. Central door lock switch 4-16
5. Power window lock button 4-28
6. Outside rearview mirror control 4-50
7. Outside rearview mirror folding 4-52
8. Fuel filler lid open button.....4-31, 4-35
9. Seat.....3-4
10. ESC off button 6-33
11. Instrument panel illumination control 4-55
12. BCW On/Off button 6-83
13. LDW On/Off button 6-94
14. Steering wheel.....4-45
15. Tilt and telescopic steering control lever....4-46
16. Inner fuse panel.....8-54
17. Brake pedal.....6-18
18. Parking brake pedal.....6-20
19. Hood release lever 4-29

❊ The actual shape may differ from the illustration.

OJFHP018003N

INSTRUMENT PANEL OVERVIEW

❊ The actual shape may differ from the illustration.

1. Cruise control 6-56
   Smart Cruise Control with Stop&Go ...6-60
2. Driver's front air bag 3-58
3. Horn.....4-48
4. Instrument cluster.....4-54
5. Wiper and washer control lever.....4-113
6. Engine start/stop button 6-6
7. Passenger's front air bag 3-58
8. Glove box 4-140
9. Hazard warning flasher 7-2
10. Automatic climate control system....4-122
11. Shift lever A/T 6-11
12. Heated steering wheel button 4-47
13.Drive mode button (Hybrid vehicle)....6-79
14. Seat warmer 4-143
    Air ventilation seat 4-144
15. Electronic parking brake (EPB) switch..6-21
16. Auto Hold On/Off button 6-27
17. 360° camera monitoring system
    ON/OFF button 4-103
18.Power outlet.....4-145
19. USB charger.....4-146
20. Center console storage box 4-140
21. Smart phone wireless charger 4-147
22. Active ECO button
    (Plug-in hybrid vehicle).....6-81

OJFHP018004C

ENGINE COMPARTMENT

■ **Gasoline Engine (Nu 2.0L - GDI)**

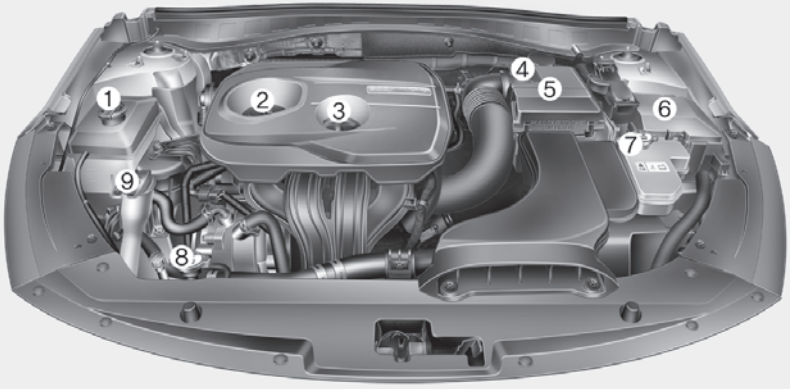

1. Engine coolant reservoir 8-21
2. Engine oil filler cap 8-18
3. Engine oil dipstick 8-18
4. Brake fluid reservoir 8-25
5. Air cleaner.....8-28
6. Fuse box 8-54
7. Inverter coolant reservoir 8-21
8. Radiator cap 8-23
9. Windshield washer fluid reservoir 8-26

❊ The actual engine room in the vehicle may differ from the illustration.

OJFH075161L

Safety features of your vehicle

Important safety precautions 3-2
- Always wear your seat belt. 3-2
- Restrain all children 3-2
- Air bag hazards 3-2
- Driver distraction 3-2
- Control your speed 3-3
- Keep your vehicle in safe condition 3-3

Seat. 3-4
- Front seat adjustment - manual. 3-7
- Front seat adjustment - power 3-8
- Driver position memory system (for power seat). . . 3-11
- Headrest (for front seat) 3-12
- Seatback pocket 3-15
- Rear seat adjustment 3-15

Seat belts 3-21
- Seat belt restraint system 3-21
- Pre-tensioner seat belt 3-27
- Seat belt precautions 3-29
- Care of seat belts 3-31

Child Restraint System (CRS) 3-32
- Children always in the rear 3-32
- Selecting a Child Restraint System (CRS) 3-33
- Installing a Child Restraint System (CRS). 3-36

Air bag - advanced supplemental restraint system 3-43
- How does the air bag system operate? 3-44
- Air bag warning light 3-46
- SRS components and functions 3-47
- Occupant Detection System (ODS) 3-50
- Driver's and passenger's front air bag 3-58
- Side air bag 3-61
- Curtain air bag 3-63
- Inflation and non-inflation conditions of the air bag. . 3-64
- SRS Care 3-69
- Adding equipment to or modifying your air bag-equipped vehicle. 3-70
- Air bag warning label 3-70

IMPORTANT SAFETY PRECAUTIONS

You will find many safety precautions and recommendations throughout this section, and throughout this manual. The safety precautions in this section are among the most important.

Always wear your seat belt

A seat belt is your best protection in all types of accidents. Air bags are designed to supplement seat belts, not replace them. So even though your vehicle is equipped with air bags, ALWAYS make sure you and your passengers wear your seat belts, and wear them properly.

Restrain all children

All children under age 13 should ride in your vehicle properly restrained in a rear seat, not the front seat. Infants and small children should be restrained in an appropriate child restraint. Larger children should use a booster seat with the lap/shoulder belt until they can use the seat belt properly without a booster seat.

Air bag hazards

While air bags can save lives, they can also cause serious or fatal injuries to occupants who sit too close to them, or who are not properly restrained. Infants, young children, and shorter adults are at the greatest risk of being injured by an inflating air bag. Follow all instructions and warnings in this manual.

Driver distraction

Driver distraction presents a serious and potentially deadly danger, especially for inexperienced drivers. Safety should be the first concern when behind the wheel and drivers need to be aware of the wide array of potential distractions, such as drowsiness, reaching for objects, eating, personal grooming, other passengers, and using cellular phones.

Drivers can become distracted when they take their eyes and attention off the road or their hands off the wheel to focus on activities other than driving. To reduce your risk of distraction or getting into an accident:

- ALWAYS set up your mobile devices (i.e., MP3 players, phones, navigation units, etc.) when your vehicle is parked or safely stopped.

- ONLY use your mobile device when allowed by laws and when conditions permit safe use. NEVER text or email while driving. Most countries have laws prohibiting drivers from texting. Some countries and cities also prohibit drivers from using handheld phones.
- NEVER let the use of a mobile device distract you from driving. You have a responsibility to your passengers and others on the road to always drive safely, with your hands on the wheel as well as your eyes and attention on the road.

Control your speed

Excessive speed is a major factor in crash injuries and deaths. Generally, the higher the speed, the greater the risk, but serious injuries can also occur at lower speeds. Never drive faster than is safe for current conditions, regardless of the maximum speed posted.

Keep your vehicle in safe condition

Having a tire blowout or a mechanical failure can be extremely hazardous. To reduce the possibility of such problems, check your tire pressures and condition frequently, and perform all regularly scheduled maintenance.

SEAT

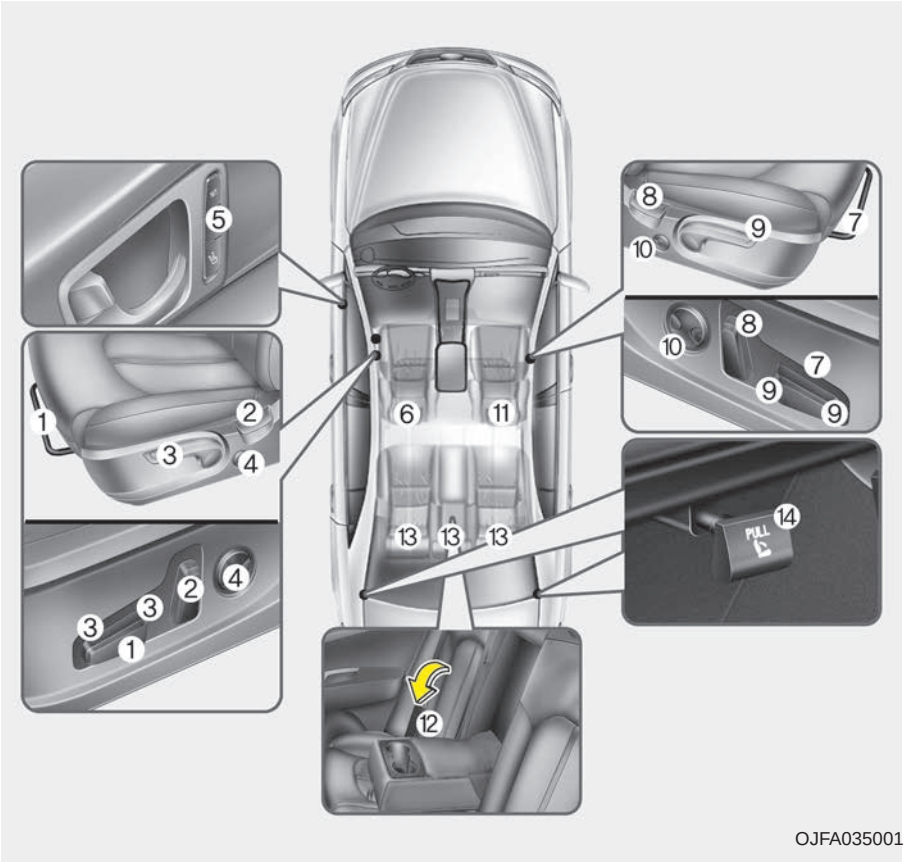

Driver's seat

(1) Seat adjustment, forward / backward
(2) Seatback recliner
(3) Seat adjustment, height
(4) Lumbar support *
(5) Driver position memory system *
(6) Headrest

Front passenger's seat

(7) Seat adjustment, forward / backward
(8) Seatback recliner
(9) Seat cushion height
(10) Lumbar support*
(11) Headrest

Rear seat

(12) Armrest
(13) Headrest
(14) Seat-back folding lever*

* : if equipped

⚠ WARNING - Loose objects

Do not place anything in the driver's foot well or under the front seats. Loose objects in the driver's foot area could interfere with the operation of the foot pedals.

⚠ WARNING - Uprighting seat

Do not press the release lever on a manual seatback without holding and controlling the seatback. The seatback will spring upright possibly impacting you or other passengers.

⚠ WARNING - Driver responsibility for passengers

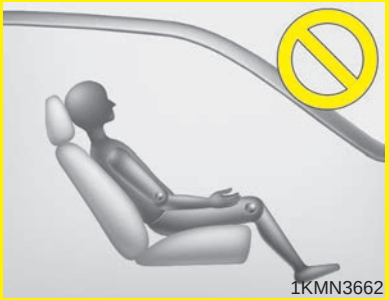

The driver must advise the passengers to keep the seatback in an upright position whenever the vehicle is in motion. If a seat is reclined during an accident, the restraint system's ability to restrain will be greatly reduced.

⚠ WARNING - Seat cushion

Occupants should never sit on aftermarket seat cushions or sitting cushions. The passenger's hips may slide under the lap portion of the seat belt during an accident or a sudden stop.

⚠ WARNING - Driver's seat

- **Never attempt to adjust the seat while the vehicle is moving. This could result in loss of control of your vehicle.**
- **Do not allow anything to interfere with the normal position of the seatback. Storing items against the seatback could result in serious or fatal injury in a sudden stop or collision.**
- **Sit as far back as possible from the steering wheel while still maintaining comfortable control of the your vehicle. A distance of at least 25 cm (10 in.) from your chest to the steering wheel is recommended. Failure to do so can result in air bag inflation injuries to the driver.**

⚠ WARNING - Rear seatbacks

Always lock the rear seatback before driving. Failure to do so could result in passengers or objects being thrown forward injuring vehicle occupants.

⚠ WARNING - Unexpected Seat Movement

After adjusting a manual seat, always check that it is locked by shifting your weight to the front and back. Sudden or unexpected movement of the driver's seat could cause you to lose control of the vehicle.

⚠ WARNING - Seat adjustment

- **Do not adjust the seat while wearing seat belts. Moving the seat forward will cause strong pressure on the abdomen.**
- **Do not place your hand near the seat bottom or seat track while adjusting the seat. Your hand could get caught in the seat mechanism.**

⚠ WARNING - Small Objects

Use extreme caution when picking up small objects trapped under the seats or between the seat and the center console. Your hands might be cut or injured by the sharp edges of the seats mechanism.

Feature of Seat Leather

- Leather is made from the outer skin of an animal, which goes through a special process to be available for use. Since it is a natural substance, each part differs in thickness or density.

  Wrinkles may appear as a natural result of stretching and shrinking depending on the temperature and humidity.
- The seat is made of stretchable fabric to improve comfort.
- The parts contacting the body are curved and the side supporting area is high which provides driving comfort and stability.
- Wrinkles may appear naturally from usage. It is not a fault of the product.

⚠ **CAUTION**

- ***Belts with metallic accessories, zippers or keys inside the back pocket may damage the seat fabric.***
- ***Make sure not to wet the seat. It may change the nature of natural leather.***
- ***Jeans or clothes which could bleach may contaminate the surface of the seat covering fabric.***

✻ **NOTICE**

Wrinkles or abrasions which appear naturally from usage are not covered by warranty.

Front seat adjustment - manual

Forward and backward

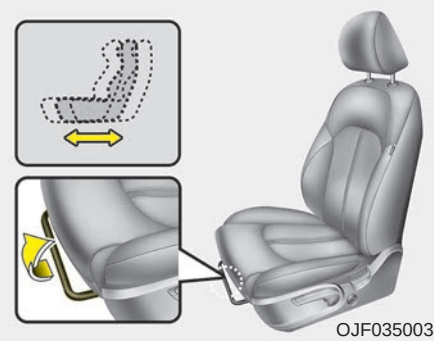

To move the seat forward or backward:

1. Pull the seat slide adjustment lever up and hold it.
2. Slide the seat to the position you desire.
3. Release the lever and make sure the seat is locked in place.

Adjust the seat before driving, and make sure the seat is locked securely by trying to move forward and backward without using the lever. If the seat moves, it is not locked properly.

Seatback angle

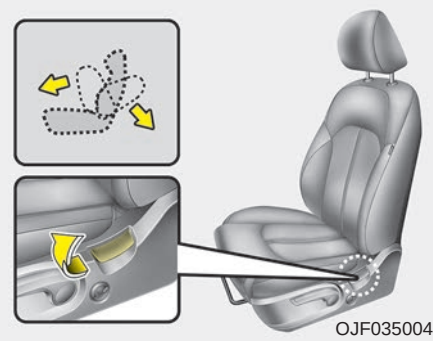

To recline the seatback:

1. Lean forward slightly and lift up the seatback recline lever.
2. Carefully lean back on the seat and adjust the seatback of the seat to the position you desire.
3. Release the lever and make sure the seatback is locked in place. (The lever MUST return to its original position for the seatback to lock.)

Seat height

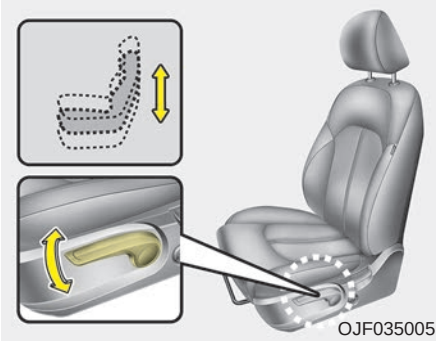

To change the height of the seat, push the lever upwards or downwards.

- To lower the seat cushion, push the lever down several times.
- To raise the seat cushion, pull the lever up several times.

Lumbar support (if equipped)

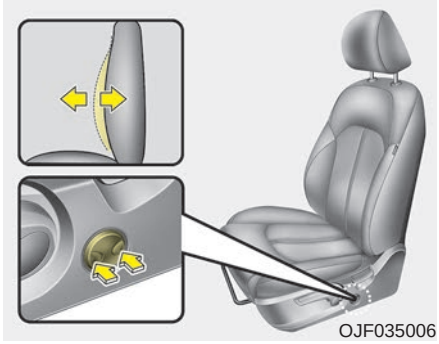

The lumbar support can be adjusted by pressing the lumbar support switch on the side of the seat.

1. Press the front portion of the switch to increase support, or the rear portion of the switch, to decrease support.
2. Release the switch once it reaches the desired position.

Front seat adjustment - power (if equipped)

The front seat can be adjusted by using the control switches located on the outside of the seat cushion. Before driving, adjust the seat to the proper position so you can easily control the steering wheel, pedals and switches on the instrument panel.

⚠ WARNING - Unattended children

Do not leave children unattended in the vehicle. Children might operate features of the vehicle that could injure them.

⚠ **CAUTION - Power seat adjustments**

The power seating controls function by electronic motor.

Excessive operation may cause damage to the electrical equipment.

⚠ **CAUTION - Power Seating**

Do not operate two or more power seat control switches at the same time. Doing so may damage the power seat motor or electrical components.

When in operation, the power seat-consumes a large amount of electrical power. To prevent unnecessary system drain, don't adjust the power seat longer than necessary while the engine is not running.

Forward and backward

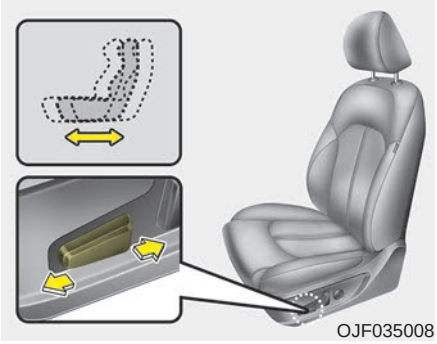

Push the control switch forward or backward to move the seat to the desired position. Release the switch once the seat reaches the desired position.

Seatback angle

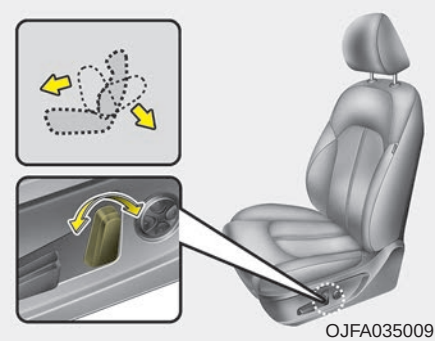

Push the control switch forward or backward to move the seatback to the desired angle. Release the switch once the seat reaches the desired position.

Seat height

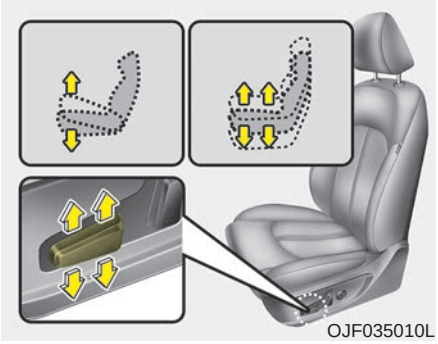

Pull the front portion of the control switch up to raise or press down to lower the front part of the seat cushion. Pull the rear portion of the control switch up to raise or press down to lower the seat cushion. Release the switch once the seat reaches the desired position.

Lumbar support (if equipped)

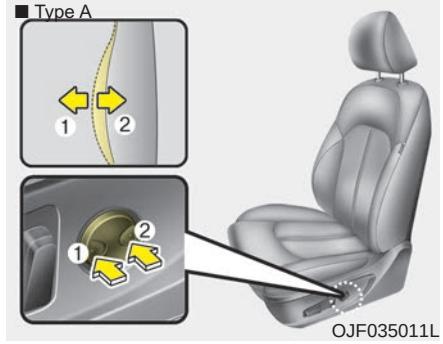

The lumbar support can be adjusted by pressing the lumbar support switch on the side of the seat.

Type A

1. Press the front portion of the switch to increase support, or the rear portion of the switch, to decrease support.
2. Release the switch once it reaches the desired position.

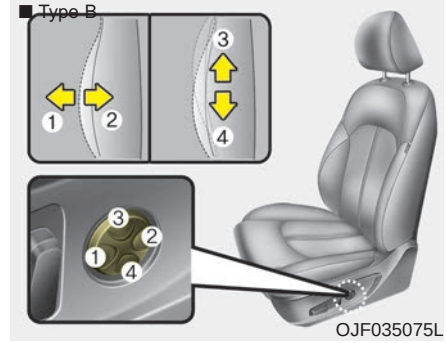

Type B

1. Press the front portion of the switch (1) to increase support, or the rear portion of the switch (2), to decrease support.
2. Release the switch once it reaches the desired position.
3. Press the upper portion (3) of the switch to move the support position up, or press the lower portion (4) of the switch, to move the support position down.
4. Release the switch once it reaches the desired position.

Driver position memory system (if equipped, for power seat)

A driver position memory system is provided to store and recall the driver seat and outside rearview mirror position with a simple button operation. By saving the desired position into the system memory, different drivers can reposition the driver seat and outside rearview mirror based upon their driving preference. If the battery is disconnected, the desired seat position memory will need to be re-saved.

⚠ WARNING - Driver Position Memory System

Never attempt to operate the driver position memory system while the vehicle is moving.

This could result in loss of control, and an accident causing death or serious injury.

Storing positions into memory using the buttons on the door

Storing driver's seat positions

1. Shift the shift lever into P while the engine start/stop button is ON.
2. Adjust the driver's seat and outside rearview mirror comfortable for the driver.
3. Press SET button on the control panel. The system will beep once.
4. Press one of the memory buttons (1 or 2) within 5 seconds after pressing the SET button. The system will beep twice when memory has been successfully stored.

When recalling an adjustment memory button while sitting in the vehicle, you can be surprised by the setting chosen if the memory has been adjusted by someone else. If that occurs, immediately push the seat position control knob in the direction of the desired position to stop further undesired movement.

Recalling positions from memory

1. Shift the shift lever into P while the engine start/stop button is ON.
2. To recall the position in the memory, press the desired memory button (1 or 2). The system will beep once, then the driver's seat will automatically adjust to the stored position.

Adjusting the control switch for the driver's seat and outside rearview mirror while the system is recalling the stored position will cause the movement to stop and move in the direction that the control switch is moved.

Easy access function (if equipped)

The system will move the driver's seat automatically as follows:

- With smart key system
  - It will move the driver's seat rearward when the engine start/stop button is changed to the OFF position.
  - It will move the driver's seat forward when the engine start/stop button is changed to the ACC or START position.

You can activate or deactivate this feature. Refer to "User settings" in chapter 4.

Headrest (for front seat)

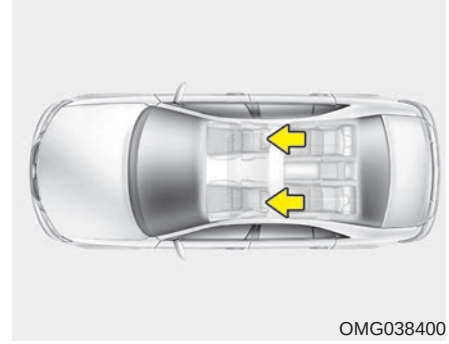

The driver's and front passenger's seats are equipped with a headrest for the occupant's safety and comfort.

The headrest not only provides comfort for the driver and front passenger, but also helps protect the head and neck in the event of a rear collision.

For maximum effectiveness in case of an accident, the headrest should be adjusted so the middle of the headrest is at the same height of the center of gravity of an occupant's head. Generally, the center of gravity of most people's head is similar with the height of the top of their eyes.

Also, adjust the headrest as close to your head as possible. For this reason, the use of a cushion that holds the body away from the seatback is not recommended.

⚠ WARNING - Headrest removal/adjustment

- **Do not operate the vehicle with the headrests removed. Headrests can provide critical neck and head support in a crash.**
- **Do not adjust the headrest height while the vehicle is in motion. Driver may lose control of the vehicle.**

Adjusting the height up and down

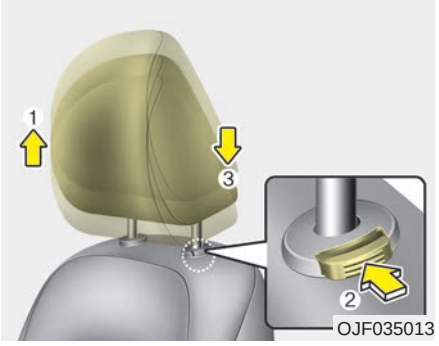

OJF035013

To raise the headrest, pull it up to the desired position (1). To lower the headrest, push and hold the release button (2) on the headrest support and lower the headrest to the desired position (3).

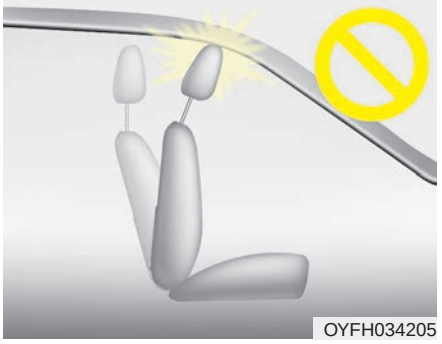
OYFH034205

✻ NOTICE

If you recline the seatback towards the front with the headrest and seat cushion raised, the headrest may come in contact with the sunvisor or other parts of the vehicle.

Removal and reinstallation

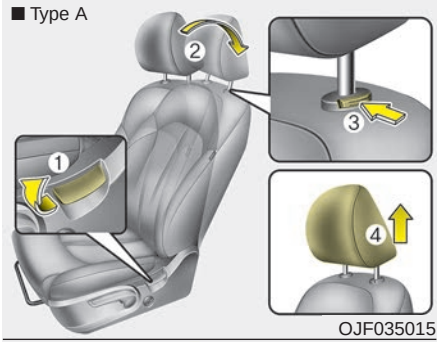

OJF035015

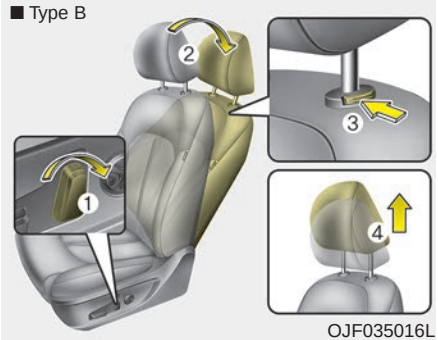

OJF035016L

To remove the headrest:

1. Recline the seatback (2) with the recline lever or switch (1).
2. Raise headrest as far as it can go.
3. Press the headrest release button (3) while pulling the headrest up (4).

⚠ WARNING - Headrest Removal

NEVER allow anyone to ride in a seat with the headrest removed. Headrests can provide critical neck and head support in a crash.

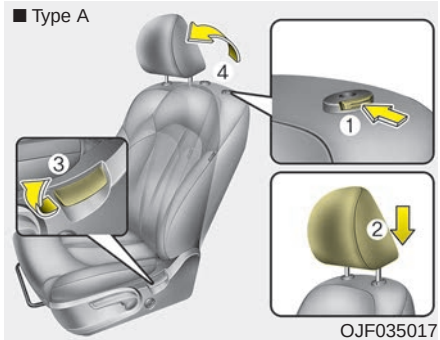

OJF035017

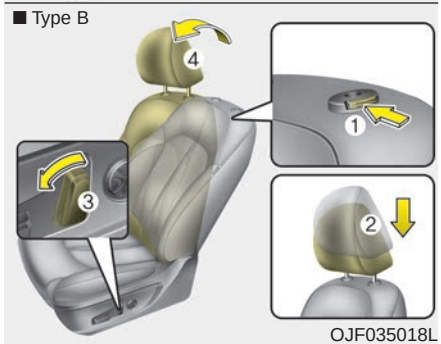

OJF035018L

To reinstall the headrest :

1. Put the headrest poles (2) into the holes while pressing the release button (1) or switch(1).
2. Recline the seatback (4) with the recline lever or switch (3).
3. Adjust the headrest to the appropriate height.

⚠ WARNING - Headrest Reinstallation

To reduce the risk of injury to the head or neck, always make sure the headrest is locked into position and adjusted properly after reinstalling.

Seatback pocket

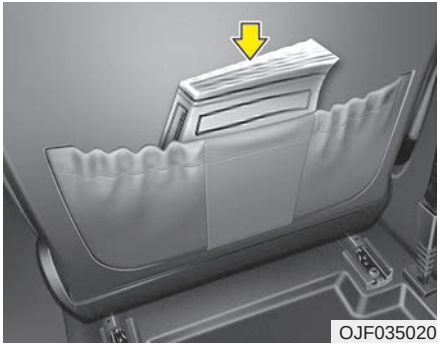
OJF035020

The seatback pocket is provided on the back of the front passenger's and driver's seatbacks.

⚠ WARNING - Seatback pockets

Do not put heavy or sharp objects in the seatback pockets. In an accident they could come loose from the pocket and injure vehicle occupants.

Rear seat adjustment

Headrest

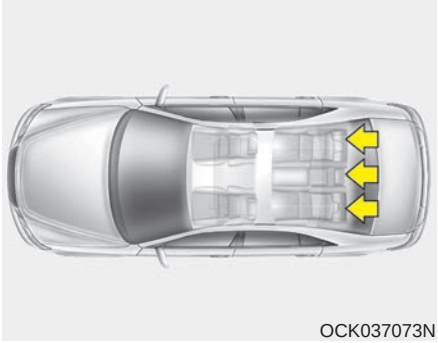
OCK037073N

The rear seat is equipped with headrests in all the seating positions for the occupant's safety and comfort.

The headrest not only provides comfort for passengers, but also helps protect the head and neck in the event of a collision.

For maximum effectiveness in case of an accident, the headrest should be adjusted so the middle of the headrest is at the same height of the center of gravity of an occupant's head. Generally, the center of gravity of most people's heads is similar with the height as the top of their eyes.

Also, adjust the headrest as close to your head as possible. For this reason, the use of a cushion that holds the body away from the seatback is not recommended.

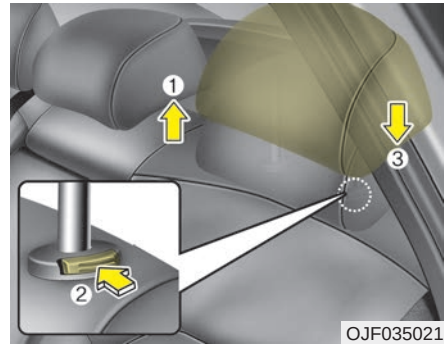

OJF035021

Adjusting the height up and down (if equipped)

To raise the headrest, pull it up to the desired position (1). To lower the headrest, push and hold the release button (2) on the headrest support and lower the headrest to the desired position (3).

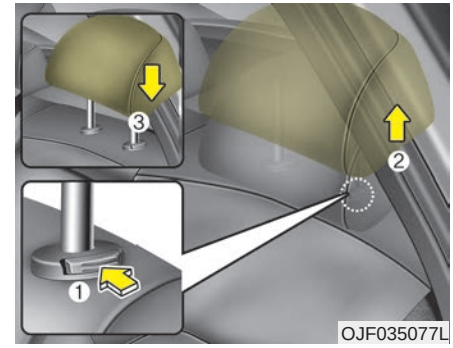

OJF035077L

Removal and reinstallation (if equipped)

To remove the headrest, raise it as far as it can go then press the release button (1) while pulling the headrest upward (2).

To reinstall the headrest, put the headrest poles (3) into the holes while pressing the release button (1). Then adjust it to the appropriate height and ensure that it locks in position.

Armrest

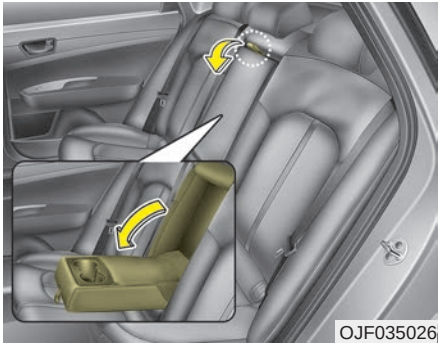

To use the armrest, pull it forward from the seatback.

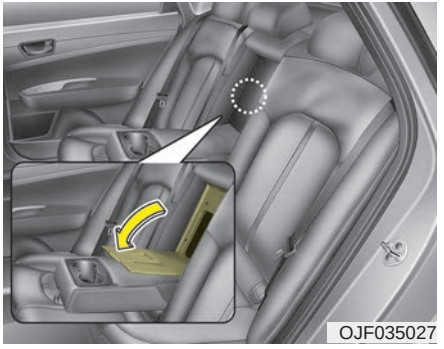

Carrying long/narrow cargo (if equipped)

Additional cargo space is provided to accommodate long/narrow cargo (skis, poles, etc.) not able to fit properly in the trunk when closed.

1. Pull the armrest down.
2. Pull the cover down while pushing the release lever down.

⚠ CAUTION

Be careful when loading cargo through the rear passenger seats to prevent damage to the vehicle interior.

Folding the rear seat (if equipped)

The rear seatbacks may be folded to facilitate carrying long items or to increase the luggage capacity of the vehicle.

⚠ WARNING - Folded Seatback

The purpose of the fold-down rear seatbacks is to allow you to carry longer objects that could not otherwise be accommodated.

- **Never allow a passenger to sit on top of the folded down seatback while the car is moving. This is not a proper seating position since no seat belts are available for use.**
- **To reduce the risk of injury caused by sliding cargo within the passenger compartment of the vehicle, objects carried on the folded down seatback should not extend higher than the top of the front seats.**

⚠ CAUTION - Blocked HEV battery duct

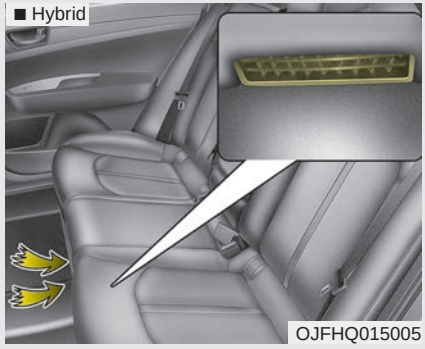

Do not put objects in the center lower part of rear seats. This could block the battery cooling duct causing battery degradation.

⚠ CAUTION - Blocked PHEV Battery Duct

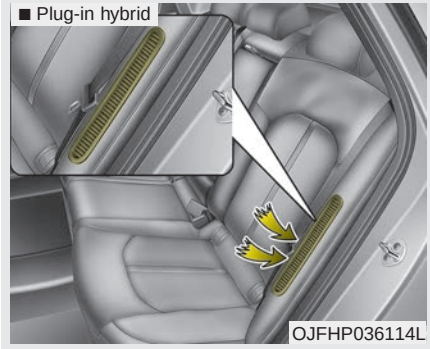

Do not put objects on the left side of rear seat. This could block the battery cooling duct causing battery degradation.

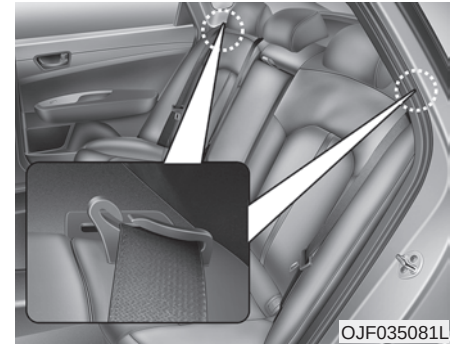

To fold down the rear seatback (for Hybrid, if equipped):

1. Make sure the rear seat belt webbing is in the guide to prevent the seat belt from being damaged.
2. Set the front seatback to the upright position and if necessary, slide the front seat forward.
3. Lower the rear headrests to the lowest position.

⚠ WARNING - Objects

Objects carried on the folded down seatback should not extend higher than the top of the front seatbacks. This could allow cargo to slide forward and cause injury or damage during sudden stops.

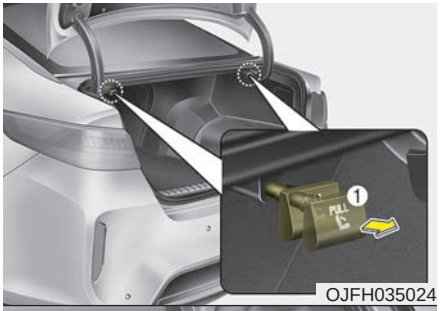

OJFH035024

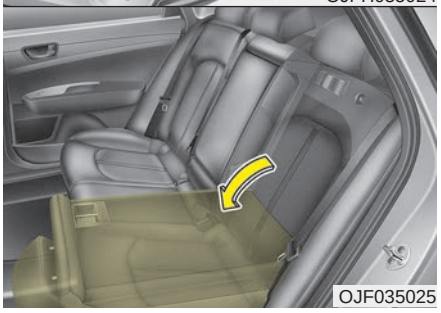

OJF035025

4. Pull out the seatback locking knob(1) in the trunk, then fold the seat toward the front of the vehicle.
5. To use the rear seat, lift and pull the seatback backward. Pull the seatback firmly until it clicks into place. Make sure the seatback is locked in place.
6. Return the rear seat belt to the proper position.

✻ NOTICE

Unless the driver's position is properly set according to the driver's physical figure, do not fold the rear seat. It may increase body injuries in a sudden stop or collision.

⚠ WARNING - Uprighting seat

When you return the seatback to its upright position, hold the seatback and return it slowly. If the seatback is returned without holding it, the back of the seat could spring forward, resulting in injury caused by being struck by the seatback.

⚠ WARNING - Rear Seatback

To ensure maximum protection in the event of an accident or sudden stop, when returning the rear seat to the upright position:

- **Be careful not to damage the seat belt webbing or buckle.**
- **Do not allow the seat belt webbing or buckle to become pinched or caught in the rear seat.**
- **Ensure the seatback is completely locked into its upright position by pushing on the top of the seatback.**

Failure to adhere to any of these instructions could result in serious injury or death in the event of a crash.

⚠ CAUTION - Damaging rear seat belt buckles

When you fold the rear seatback, insert the buckle between the rear seatback and cushion. Doing so can prevent the buckle from being damaged by the rear seatback.

When returning the rear seatbacks to the upright position, remember to return the rear shoulder belts to their proper position.

⚠ WARNING - Cargo

Cargo should always be secured to prevent it from being thrown about the vehicle in a collision and causing injury to the vehicle occupants. Do not place objects in the rear seats, since they cannot be properly secured and may hit the front seat occupants in a collision.

⚠ WARNING - Cargo loading

Make sure the engine is off, the automatic transaxle is in P (Park) and the parking brake is securely applied whenever loading or unloading cargo. Failure to take these steps may allow the vehicle to move if the shift lever is inadvertently moved to another position.

SEAT BELTS

Seat belt restraint system

- For maximum restraint system protection, the seat belts must always be used whenever the vehicle is moving. A properly positioned shoulder belt should be positioned midway over your shoulder across your collarbone.
- Never allow children to ride in the front passenger seat. See child restraint system section for further discussion.

⚠ WARNING - Twisted seat belt

Make sure your seat belt is not twisted when worn. A twisted seat belt may not properly protect you in an accident and could even cut into your body.

⚠ WARNING - Shoulder Belt

- **Never wear the shoulder belt under your arm or behind your back. An improperly positioned shoulder belt cannot protect the occupant in a crash.**
- **Always wear both the shoulder portion and lap portion of the lap/shoulder belt.**

⚠ WARNING - Damaged seat belt

Replace the entire seat belt assembly if any part of the webbing or hardware is damaged as you can no longer be sure that a damaged seat belt will provide protection in a crash.

Seat belts are designed to bear upon the bony structure of the body, and should be worn low across the front of the pelvis, chest and shoulders, as applicable; wearing the lap section of the belt across the abdominal area must be avoided.

Seat belts should be adjusted as firmly as possible, consistent with comfort, to provide the protection for which they have been designed.

A slack belt will greatly reduce the protection afforded to the wearer.

Care should be taken to avoid contamination of the webbing with polishes, oils and chemicals, and particularly battery acid. Cleaning may safely be carried out using mild soap and water. The belt should be replaced if webbing becomes frayed, contaminated or damaged.

- No modifications or additions should be made by the user which would either prevent the seat belt adjusting devices from operating to remove slack, or prevent the seat belt assembly from being adjusted to remove slack.
- When you fasten the seat belt, be careful not to latch the seat belt in buckles of other seat. It's very dangerous and you may not be protected by the seat belt properly.
- Do not unfasten the seat belt and do not fasten and unfasten the seat belt repeatedly while driving. This could result in loss of control, and an accident causing death, serious injury, or property damage.
- When fastening the seat belt, make sure that the seat belt does not pass over objects that are hard or can break easily.

⚠ WARNING - Seat belt buckle

Do not allow foreign material (gum, crumbs, coins, etc.) to obstruct the seat belt buckle. This may prevent the seat belt from fastening securely.

Driver's seat belt warning

As a reminder to the driver, the seat belt warning light will illuminate and warning chime will sound for approximately 6 seconds each time engine start/stop button is ON if the seat belt is unfastened.

If you continue not to fasten the seat belt and you drive over 9km/h (6mph), the warning light will stay illuminated until you drive under 6km/h (4mph). (if equipped)

If you continue not to fasten the seat belt and you drive over 20km/h (12mph) the seat belt warning chime will sound for approximately 100 seconds and the corresponding warning light will blink. (if equipped)

If you unfasten the seat belt while driving under 20km/h (12mph), the seat belt warning light will illuminate until the seat belt is fastened.

If you unfasten the seat belt while driving over 20km/h (12mph), the seat belt warning chime will sound for approximately 100 seconds and the corresponding warning light will blink.

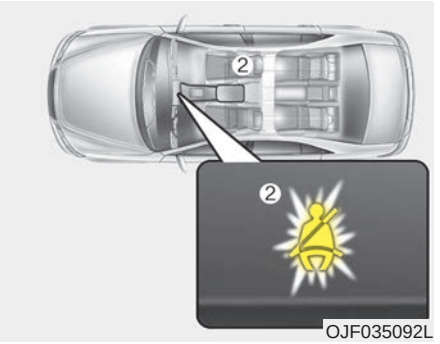

Front passenger's seat belt warning

As a reminder to the front passenger, the front passenger's seat belt warning lights will illuminate for approximately 6 seconds each time engine start/stop button is ON regardless of belt fastening.

If the front passenger continues not to fasten the seatbelt and you drive over 9km/h (6mph), the warning light will stay illuminated.

If the front passenger unfastens the seat belt while driving in case of under 20km/h (12mph) the seat belt warning light will illuminate until the seat belt is fastened.

If the front passenger unfastens the seat belt while driving over 20km/h (12mph), the seat belt warning chime will sound for approximately 100 seconds and the corresponding warning light will blink.

Seat belt - Driver's 3-point system with emergency locking retractor

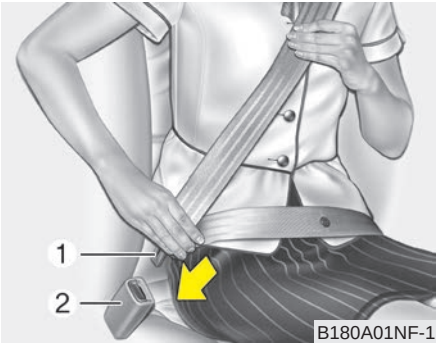

To fasten your seat belt:

To fasten your seat belt, pull it out of the retractor and insert the metal tab (1) into the buckle (2). There will be an audible "click" when the tab locks into the buckle.

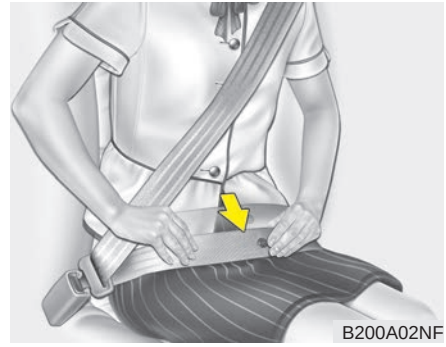

The seat belt automatically adjusts to the proper length only after the lap belt portion is adjusted manually so that it fits snugly around your hips. If you lean forward in a slow, easy motion, the belt will extend and let you move around. If there is a sudden stop or impact, however, the belt will lock into position. It will also lock if you try to lean forward too quickly.

✻ NOTICE

If you are not able to pull out the seat belt from the retractor, firmly pull the belt out and release it. Then you will be able to pull the belt out smoothly.

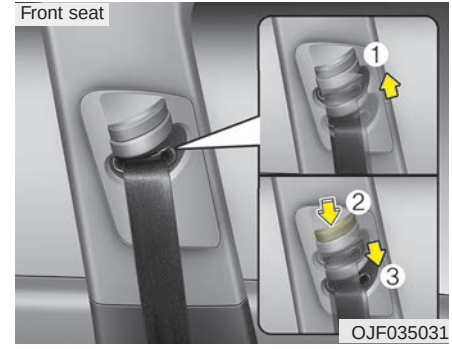

Height adjustment

You can adjust the height of the shoulder belt anchor to one of the 4 positions for maximum comfort and safety.

The height of the adjusting seat belt should not be too close to your neck. The shoulder portion should be adjusted so that it lies across your chest and midway over your shoulder near the door and not your neck.

To adjust the height of the seat belt anchor, lower or raise the height adjuster into an appropriate position.

To raise the height adjuster, pull it up (1). To lower it, push it down (3) while pressing the height adjuster button (2).

Release the button to lock the anchor into position. Try sliding the height adjuster to make sure that it has locked into position.

Improperly positioned seat belts can cause serious injuries in an accident.

⚠ WARNING - Shoulder belt positioning

Never position the shoulder belt across your neck or face.

⚠ WARNING - Seat belt replacement

Replace your seat belts after being in an accident. Failure to replace seat belts after an accident could leave you with damaged seat belts that will not provide protection in the event of another collision.

Seat belts - Front passenger and rear seat 3-point system with combination locking retractor

To fasten your seat belt:

Combination retractor type seat belts are installed in the rear seat positions to help accommodate the installation of child restraint systems. Although a combination retractor is also installed in the front passenger seat position, it is strongly recommended that children always be seated in the rear seat. NEVER place any infant restraint system in the front seat of the vehicle.

This type of seat belt combines the features of both an emergency locking retractor seat belt and an automatic locking retractor seat belt. To fasten your seat belt, pull it out of the retractor and insert the metal tab into the buckle. There will be an audible "click" when the tab locks into the buckle. When not securing a child restraint, the seat belt operates in the same way as the driver's seat belt (Emergency Locking Retractor Type).

It automatically adjusts to the proper length only after the lap belt portion of the seat belt is adjusted manually so that it fits snugly around your hips.

When the seat belt is fully extended from the retractor to allow the installation of a child restraint system, the seat belt operation changes to allow the belt to retract, but not to extend (Automatic Locking Retractor Type). Refer to “Using a child restraint system” in this section.

✻ NOTICE

Although the combination retractor provides the same level of protection for seated passengers in either emergency or automatic locking modes, have the seated passengers use the emergency locking feature for improved convenience. The automatic locking function is intended to facilitate child restraint installation. To convert from the automatic locking feature to the emergency locking operation mode, allow the unbuckled seat belt to fully retract.

⚠ CAUTION

Do NOT fold down the left portion of the rear seat back when the rear center seat belt is buckled. ALWAYS UNBUCKLE the rear center seat belt before folding down the left portion of the rear seat back. If the rear center seat belt is buckled when the left portion of the rear seat back is folded down, distortion and damage to the top portion of the seat back and seat belt garnish may result, causing the seat back to lock into the folded down position.

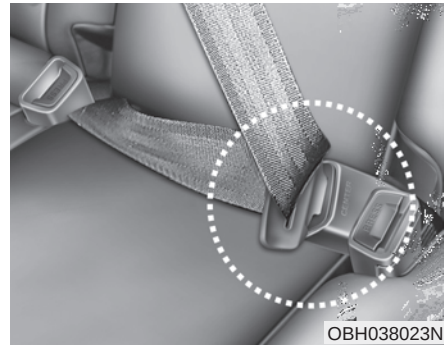

When using the rear center seat belt, the buckle with the “CENTER” mark must be used.

⚠ WARNING

Prior to fastening the rear seat belts, ensure the latch matches the seat belt buckle. Forcefully fastening the left or right seat belt to the center buckle can result in an improper fastening scenario that will not protect you in an accident.

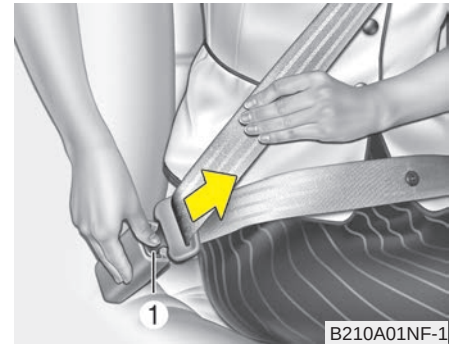

To release the seat belt:

The seat belt is released by pressing the release button (1) on the locking buckle. When it is released, the belt should automatically draw back into the retractor.

If this does not happen, check the belt to be sure it is not twisted, then try again.

Pre-tensioner seat belt

Your vehicle is equipped with driver's and front passenger's pre-tensioner seat belts (retractor pretensioner and EFD (Emergency Fastening Device)). The pre-tensioner seat belts may be activated, when a frontal collision is severe enough, together with the air bags.

When the vehicle stops suddenly, or if the occupant tries to lean forward too quickly, the seat belt retractor may lock into position. In certain frontal collisions, the pre-tensioner will activate and pull the seat belt into tighter contact against the occupant's body.

(1) Retractor Pretensioner

The purpose of the retractor pretensioner is to make sure that the shoulder belts fit in tightly against the occupant's upper body in certain frontal collisions.

(2) EFD (Emergency Fastening Device)

The purpose of the EFD is to make sure that the pelvis belts fit in tightly against the occupant's lower body in certain frontal collisions.

If the system senses excessive tension on the driver or passenger's seat belt when the pre-tensioner system activates, the load limiter inside the retractor pre-tensioner will release some of the pressure on the affected seat belt.

✻ NOTICE

When the pre-tensioner seat belts are activated, a loud noise may be heard and fine dust, which may appear to be smoke, may be visible in the passenger compartment. These are normal operating conditions and are not hazardous.

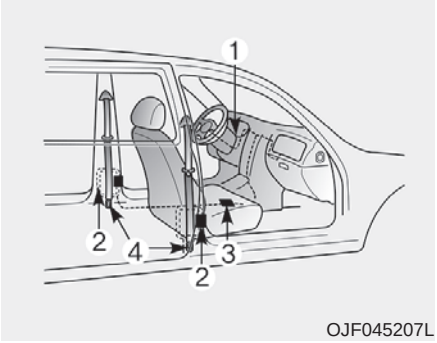

OJF045207L

The seat belt pre-tensioner system consists mainly of the following components. Their locations are shown in the illustration:

(1) SRS air bag warning light

(2) Front retractor pre-tensioner assembly

(3) SRS control module

(4) Emergency fastening device (EFD)

⚠ WARNING - Skin Irritation

Wash all exposed skin areas thoroughly after an accident in which the pre-tensioner seat belts were activated. The fine dust from the pre-tensioner activation may cause skin irritation and should not be breathed for prolonged periods.

✻ NOTICE

- **Both the driver's and front passenger's seat belt pre-tensioner system may be activated not only in certain frontal collisions, but also in certain side collisions or rollovers, if the vehicle is equipped with a side or curtain air bag.**
- **Because the sensor that activates the SRS air bag is connected with the pre-tensioner seat belt, the SRS air bag warning light on the instrument panel will illuminate for approximately 6 seconds after engine start/stop button has been changed to ON position, and then it should turn off.**

If the pre-tensioner seat belt system is not working properly, this warning light will illuminate even if there is not a malfunction with the SRS air bag. If the SRS air bag warning light does not illuminate when engine start/stop button has been changed to ON, or if it remains illuminated after illuminating for approximately 6 seconds, or if it illuminates while the vehicle is being driven, have an authorized Kia dealer inspect the pre-tensioner seat belt and SRS air bag system as soon as possible.

✻ NOTICE

Do not attempt to service or repair the pre-tensioner seat belt system in any manner. Do not attempt to inspect or replace the pre-tensioner seat belts yourself. This must be done by an authorized Kia dealer.

⚠ WARNING - Hot pretensioner

Do not touch the pre-tensioner seat belt assemblies for several minutes after they have been activated. When the pre-tensioner seat belt mechanism fires during a collision the pre-tensioner becomes hot and can burn you.

Pre-tensioners are designed to operate only one time. After activation, pre-tensioner seat belts must be replaced. If the pre-tensioner must be replaced, contact an authorized Kia dealer.

Seat belt precautions

Infant or small child

You should be aware of the specific requirements in your country. Child and/or infant seats must be properly placed and installed in the rear seat. For more information about the use of these restraints, refer to “Child restraint system” in this section.

✻ NOTICE

Small children are best protected from injury in an accident when properly restrained in the rear seat by a child restraint system that meets the requirements of the Safety standards of your country. Before buying any child restraint system, make sure that it has a label certifying that it meets Safety standards of your country. The restraint must be appropriate for your child's height and weight. Check the label on the child restraint for this information. Refer to “Child restraint system” in this section.

Larger children

Children who are too large for child restraint systems should always occupy the rear seat and use the available lap/shoulder belts. The lap portion should be fastened and snugged on the hips as low as possible. Check periodically to insure that the belt fits. A child's squirming could put the belt out of position. Children are given the most safety in the event of an accident when they are restrained by a proper restraint system in the rear seat. If a larger child (over age 13) must be seated in the front seat, the child should be securely restrained by the available lap/shoulder belt and the seat should be placed in the rearmost position. Children age 13 and under should be restrained securely in the rear seat. NEVER place a child age 13 and under in the front seat. NEVER place a rear facing child seat in the front seat of a vehicle.

If the shoulder belt portion slightly touches the child's neck or face, try placing the child closer to the center of the vehicle. If the shoulder belt still touches their face or neck they need to be returned to a child restraint system.

⚠ WARNING - Small children

Do not allow small children to ride in the vehicle without an appropriate child restraint system. If the shoulder belt comes in contact with your child's neck or face your child is too small to ride in the vehicle. In a crash the seat belt will inflict injury to your child's neck, throat and face.

Restraint of pregnant women

Pregnant women should wear lap/shoulder belt assemblies whenever possible according to specific recommendations by their doctors. The lap portion of the belt should be worn AS SECURELY AND LOW AS POSSIBLE.

⚠ WARNING - Pregnant women

Pregnant women must never place the lap portion of the seat belt above or on the abdomen where the fetus is located. The force of the seat belt during a collision will crush the fetus.

Injured person

A seat belt should be used when an injured person is being transported. When this is necessary, you should consult a physician for recommendations.

One person per belt

Two people (including children) should never attempt to use a single seat belt. This could increase the severity of injuries in case of an accident.

Do not lie down

To reduce the chance of injuries in the event of an accident and to achieve maximum effectiveness of the restraint system, all passengers should be sitting up and the front and rear seats should be in an upright position when the vehicle is moving. A seat belt cannot provide proper protection if the person is lying down in the rear seat or if the front and rear seats are in a reclined position.

Care of seat belts

Seat belt systems should never be disassembled or modified. In addition, care should be taken to assure that seat belts and belt hardware are not damaged by seat hinges, doors or other abuse.

⚠ WARNING - Pinched seat belt

Make sure that the webbing and/or buckle does not get caught or pinched in the rear seat when returning the rear seatback to its upright position. A caught or pinched webbing/ buckle may become damaged and could fail during a collision or sudden stop.

⚠ WARNING

Seatbelts can become hot in a vehicle that has been closed up in sunny weather. They could burn infants and children.

Periodic inspection

All seat belts should be inspected periodically for wear or damage of any kind. Any damaged parts should be replaced as soon as possible.

Keep belts clean and dry

Seat belts should be kept clean and dry. If belts become dirty, they can be cleaned by using a mild soap solution and warm water. Bleach, dye, strong detergents or abrasives should not be used because they may damage and weaken the fabric.

When to replace seat belts

The entire in-use seat belt assembly or assemblies should be replaced if the vehicle has been involved in an accident. This should be done even if no damage is visible. Additional questions concerning seat belt operation should be directed to an authorized Kia dealer.

CHILD RESTRAINT SYSTEM (CRS)

Children Always in the Rear

⚠ WARNING - Restraint Location

Never install a child or infant seat on the front passenger's seat. A child riding in the front passenger seat can be forcefully struck by an inflating airbag and seriously injured.

⚠ WARNING - Hot Child Restraint

A child restraint system can become very hot if it is left in a closed vehicle on a sunny day. Be sure to check the seat cover, buckles and latches before placing a child in the restraint system.

Children under age 13 must always ride in the rear seats and must always be properly restrained to minimize the risk of injury in an accident, sudden stop or sudden maneuver. According to accident statistics, children are safer when properly restrained in the rear seats than in the front seat. Even with air bags, children can be seriously injured or killed. Children too large for a child restraint must use the seat belts provided.

Most countries have child restraint laws which require children to travel in approved child restraint devices. The laws governing the age or height/weight restrictions at which seat belts can be used instead of child restraints differs among countries, so you should be aware of the specific requirements in your country, and where you are travelling.

Child restraint systems must be properly placed and installed in the rear seat. You must use a commercially available child restraint system that meets the requirements of the Safety Standards of your country.

Child restraint systems are generally designed to be secured in a vehicle seat by lap belt portion of a lap/shoulder belt, or by a LATCH system in the rear seats of the vehicle.

Child restraint system (CRS)

Infants and younger children must be restrained in an appropriate rear-facing or forward-facing CRS that has first been properly secured to the rear seat of the vehicle. Read and comply with the instructions for installation and use provided by the manufacturer of the child restraint.

⚠ WARNING
- Child Restraint Installation

An improperly secured child restraint can increase the risk of serious injury or death in an accident. Always take the following precautions when using a child restraint system:

- **Always follow the child restraint system manufacturer's instructions for installation and use.**

(Continued)

(Continued)

- **Always properly restrain your child in the child restraint.**
- **If the vehicle head restraint prevents proper installation of a child seat (as described in the child restraint system manual), the head restraint of the respective seating position should be readjusted or entirely removed.**
- **Do not use an infant carrier or a child safety seat that "hooks" over a seatback, it may not provide adequate protection in an accident.**

✻ NOTICE

After an accident, have a Kia dealer check the child restraint system, seat belts, tether anchors and lower anchors.

Selecting a Child Restraint System (CRS)

When selecting a CRS for your child, always:

- Make sure the CRS has a label certifying that it meets applicable Safety Standards of your country.
- Select a child restraint based on your child's height and weight. The required label or the instructions for use typically provide this information.
- Select a child restraint that fits the vehicle seating position where it will be used.
- Read and comply with the warnings and instructions for installation and use provided with the child restraint system.

⚠ WARNING - Holding Children

Never hold a child in your arms or lap when riding in a vehicle. The violent forces created during a crash will tear the child from your arms and throw the child against the car's interior. Always use a child restraint system which is appropriate for your child's height and weight.

⚠ WARNING - Unattended Children

Never leave children unattended in a vehicle. The car can heat up very quickly, resulting in injuries to the child in the vehicle.

⚠ WARNING - Seat Belt Use

Do not use one seat belt for two occupants at the same time. This will eliminate any safety benefit provided by the seat belt to the occupants.

Child restraint system types

There are three main types of child restraint systems: rear-facing seats, forward-facing seats, and booster seats. They are classified according to the child's age, height and weight.

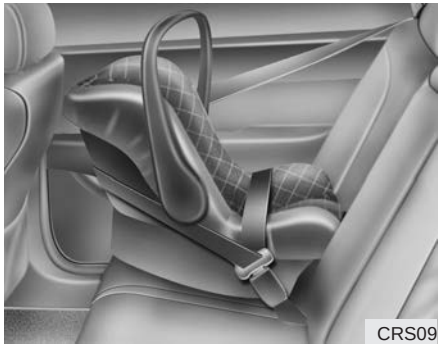

Rear-facing child seats

A rear-facing child seat provides restraint with the seating surface against the back of the child. The harness system holds the child in place, and in an accident, acts to keep the child positioned in the seat and reduces the stress to the neck and spinal cord.

All children under age one must always ride in a rear-facing infant child restraint.

Convertible and 3-in-1 child seats typically have higher height and weight limits for the rear-facing position, allowing you to keep your child rear-facing for a longer period of time.

Continue to use a rear-facing child seat for as long as your child will fit within the height and weight limits allowed by the child seat manufacturer. It's the best way to keep them safe. Once your child has outgrown the rear-facing child restraint, your child is ready for a forward-facing child restraint with a harness.

Forward-facing child restraints

A forward-facing child seat provides restraint for the child's body with a harness. Keep children in a forward-facing child seat with a harness until they reach the top height or weight limit allowed by your child restraint's manufacturer.

Once your child outgrows the forward-facing child restraint, your child is ready for a booster seat.

Booster seats

A booster seat is a restraint designed to improve the fit of the vehicle's seat belt system. A booster seat positions the seat belt so that it fits properly over the lap of your child.

Keep your child in a booster seat until they are big enough to sit in the seat without a booster and still have the seat belt fit properly. For a seat belt to fit properly, the lap belt must lie snugly across the upper thighs, not the stomach. The shoulder belt should lie snug across the shoulder and chest and not across the neck or face. Children under age 13 must always ride in the rear seats and must always be properly restrained to minimize the risk of injury.

Installing a Child Restraint System (CRS)

After selecting a proper child seat for your child, check to make sure it fits properly in your vehicle. Follow the instructions provided by the manufacturer when installing the child seat. Note these general steps when installing the seat to your vehicle:

- **Properly secure the child restraint to the vehicle.** All child restraints must be secured to the vehicle with the lap part of a lap/shoulder belt or with the LATCH system.
- **Make sure the child restraint is firmly secured.** After installing a child restraint to the vehicle, push and pull the seat forward and from side-to-side to verify that it is securely attached to the seat. A child restraint secured with a seat belt should be installed as firmly as possible. However, some side-to-side movement can be expected.\
- **Secure the child in the child restraint.** Make sure the child is properly strapped in the child restraint according to the manufacturer instructions.

Lower Anchors and Tether for Children (LATCH) System

The LATCH system holds a child restraint during driving and in an accident. This system is designed to make installation of the child restraint easier and reduce the possibility of improperly installing your child restraint. The LATCH system uses anchors in the vehicle and attachments on the child restraint. The LATCH system eliminates the need to use seat belts to secure the child restraint to the rear seats.

Lower anchors are metal bars built into the vehicle. There are two lower anchors for each LATCH seating position that will accommodate a child restraint with lower attachments.

To use the LATCH system in your vehicle, you must have a child restraint with LATCH attachments.

The child seat manufacturer will provide you with instructions on how to use the child seat with its attachments for the LATCH lower anchors.

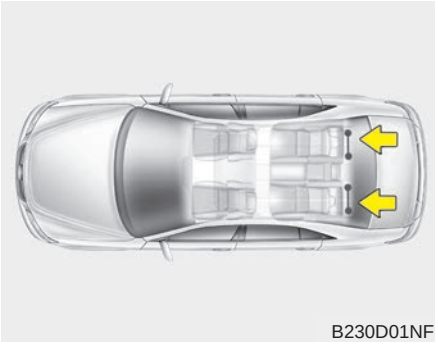
B230D01NF

LATCH anchors have been provided in the left and right outboard rear seating positions. Their locations are shown in the illustration. There are no LATCH anchors provided for the center rear seating position.

⚠ WARNING - LATCH Lower Anchors

Never attempt to attach a LATCH equipped seat in the center seating position. LATCH lower anchors are only to be used in the left and right rear outboard seating positions. You may damage the anchors or the anchors may fail and break in a collision.

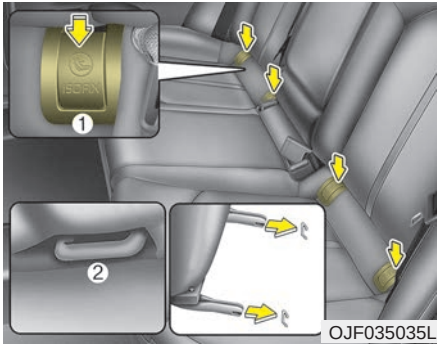

OJF035035L

The lower anchor position indicator symbols are located on the left and right rear seat backs to identify the position of the lower anchors in your vehicle (see arrows in illustration).

The LATCH anchors are located between the seatback and the seat cushion of the rear seat left and right outboard seating positions.

To use the lower anchor, push the upper portion of the lower anchor cover.

❊ (1) : Lower Anchor position indicator
(2) : Lower Anchor

Securing a child restraint with the LATCH anchors system

To install a LATCH-compatible child restraint in either of the rear outboard seating positions:

1. Move the seat belt buckle away from the lower anchors.
2. Move any other objects away from the anchors that could prevent a secure connection between the child restraint and the lower anchors.
3. Place the child restraint on the vehicle seat, then attach the seat to the lower anchors according to the instructions provided by the child restraint manufacturer.
4. Follow the child restraint instructions for properly adjusting and tightening the lower attachments on the child restraint to the lower anchors.

⚠ WARNING

Take the following precautions when using the LATCH system:

- **Read and follow all installation instructions provided with your child restraint system.**
- **To prevent the child from reaching and taking hold of the unused seat belts, buckle all unused rear seat belts before the child is placed into the vehicle. Lock each unused seatbelt following the instructions in the "Automatic locking mode" subsection, and place the webbing behind the child seat or against an unused seatback. Children can be strangled if a shoulder belt becomes wrapped around their neck and the seat belt tightens.**
- **NEVER attach more than one child restraint to a single anchor. This could cause the anchor or attachment to come loose or break.**

(Continued)

(Continued)

- **Always have the LATCH system inspected by your authorized Kia dealer after an accident. An accident can damage the LATCH system and may not properly secure the child restraint.**

Securing a child restraint seat with "Tether Anchor" system

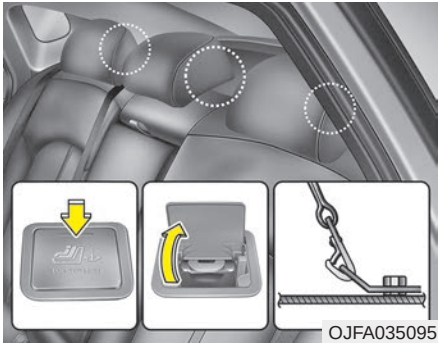
OJFA035095

First secure the child restraint with the LATCH lower anchors or the seat belt. If the child restraint manufacturer recommends that the top tether strap be attached, attach and tighten the top tether strap to the top tether strap anchor.

Child restraint hook holders are located on the shelf behind the rear seats.

⚠ WARNING

Take the following precautions when installing the tether strap:

- **Read and follow all installation instructions provided with your child restraint system.**
- **NEVER attach more than one child restraint to a single tether anchor. This could cause the anchor or attachment to come loose or break.**
- **Do not attach the tether strap to anything other than the correct tether anchor. It may not work properly if attached to something else.**
- **Do not use the tether anchors for adult seat belts or harnesses, or for attaching other items or equipment to the vehicle.**
- **Always fasten the seat belts behind the child restraint seat when they are not used to secure the child seat. Failure to do so may result in child strangulation.**

OJF035034

To install the tether anchor:

1. Route the child restraint tether strap over the child restraint seatback. Route the tether strap under the head restraint and between the head restraint posts, or route the tether strap over the top of the vehicle seatback. Make sure the strap is not twisted.
2. Connect the tether strap hook to the tether anchor, then tighten the tether strap according to the child seat manufacturer's instructions to firmly secure the child restraint to the seat.

3. Check that the child restraint is securely attached to the seat by pushing and pulling the seat forward and from side-to-side.

Securing a child restraint with a lap belt or lap/shoulder belt

When not using the LATCH system, all child restraints must be secured to a vehicle rear seat with the lap part of a lap/shoulder belt.

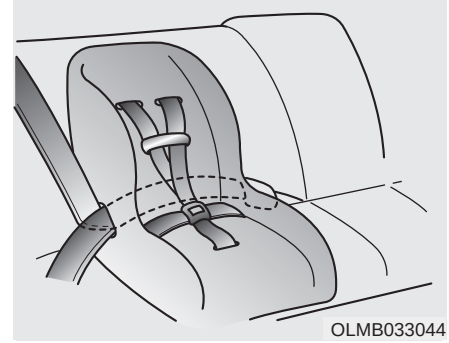

Automatic locking mode

Since all passenger seat belts move freely under normal conditions and only lock under extreme or emergency conditions (emergency locking mode), you must manually pull the seat belt all the way out to shift the retractor to the “Automatic Locking” mode to secure a child restraint.

The “Automatic Locking” mode will help prevent the normal movement of the child in the vehicle from causing the seat belt to loosen and compromise the child restraint system. To secure a child restraint system, use the following procedure.

To install a child restraint system on the rear seats, do the following:

1. Place the child restraint system on a rear seat and route the lap/ shoulder belt around or through the child restraint, following the restraint manufacturer's instructions.

   Be sure the seat belt webbing is not twisted.

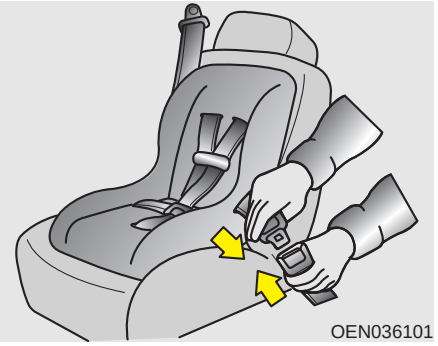

2. Fasten the lap/shoulder belt latch into the buckle. Listen for the distinct "click" sound.

   Position the release button so that it is easy to access in case of an emergency.

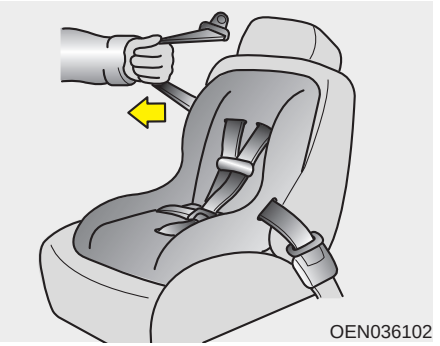

3. Pull the shoulder portion of the seat belt all the way out. When the shoulder portion of the seat belt is fully extended, it will shift the retractor to the "Automatic Locking" (child restraint) mode.

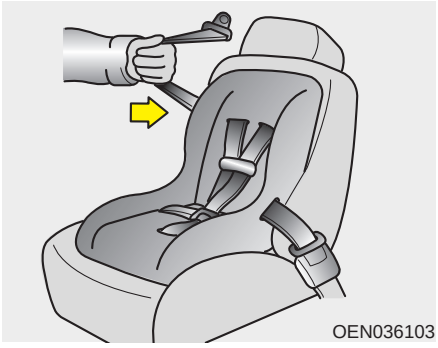

4. Slowly allow the shoulder portion of the seat belt to retract and listen for an audible "clicking" or "ratcheting" sound. This indicates that the retractor is in the "Automatic Locking" mode. If no distinct sound is heard, repeat steps 3 and 4.
5. Remove as much slack from the belt as possible by pushing down on the child restraint system while feeding the shoulder belt back into the retractor.
6. Push and pull on the child restraint system to confirm that the seat belt is holding it firmly in place. If it is not, release the seat belt and repeat steps 2 through 6.
7. Double check that the retractor is in the "Automatic Locking" mode by attempting to pull more of the seat belt out of the retractor. If you cannot, the retractor is in the "Automatic Locking" mode.

If your CRS manufacturer instructs or recommends you to use a tether anchor with the lap/shoulder belt, refer to the previous pages for more information.

✻ NOTICE

When the seat belt is allowed to retract to its fully stowed position, the retractor will automatically switch from the "Automatic Locking" mode to the emergency lock mode for normal adult usage.

⚠ WARNING - Auto lock mode

Set the retractor to Automatic Lock mode when installing any child restraint system. If the retractor is not in the Automatic Locking mode, the child restraint can move when your vehicle turns or stops suddenly.

To remove the child restraint, press the release button on the buckle and then pull the lap/shoulder belt out of the restraint and allow the seat belt to retract fully.

AIR BAG - ADVANCED SUPPLEMENTAL RESTRAINT SYSTEM

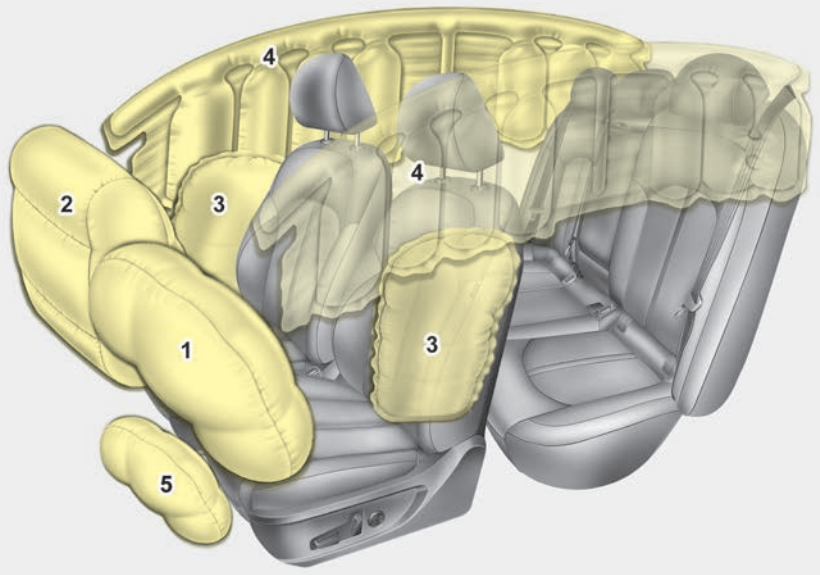

The actual air bags in the vehicle may differ from the illustration.

OJF035036

(1) Driver's front air bag
(2) Passenger's front air bag
(3) Side air bag
(4) Curtain air bag
(5) Driver's knee air bag

Even in vehicles with air bags, you and your passengers must always wear the safety belts provided in order to minimize the risk and severity of injury in the event of a collision or rollover.

How does the air bag system operate?

- Air bags are activated (able to inflate if necessary) only when the engine start/stop button has been changed to ON position.
- The appropriate air bags inflate instantly in the event of a serious frontal collision or side collision in order to help protect the occupants from serious physical injury.
- There is no single speed at which the air bags will inflate.

  Generally, air bags are designed to inflate based upon the severity of a collision and its direction. These two factors determine whether the sensors produce an electronic deployment/ inflation signal.
- Air bag deployment depends on a number of factors including vehicle speed, angles of impact, and, the density and stiffness of the vehicles or objects which your vehicle hits in the collision. The determining factors are not limited to those mentioned above.
- The front air bags will completely inflate and deflate in an instant.

  It is virtually impossible for you to see the air bags inflate during an accident.

  It is much more likely that you will simply see the deflated air bags hanging out of their storage compartments after the collision.
- In addition to inflating in serious side collisions, side and/or curtain air bags will inflate if the sensing system detects a rollover.
- When a rollover is detected, side and/or curtain air bags will remain inflated longer to help provide protection from ejection, especially when used in conjunction with the seat belts.
- In order to help provide protection, the air bags must inflate rapidly. The speed of the air bag inflation is a consequence of extremely short time in which to inflate the air bag between the occupant and the vehicle structures before the occupant impacts those structures. This speed of inflation reduces the risk of serious or life-threatening injuries and is thus a necessary part of the air bag design.

  However, air bag inflation can also cause injuries which can include facial abrasions, bruises and broken bones because the inflation speed also causes the air bags to expand with a great deal of force.
- **There are even circumstances under which contact with the steering wheel or passenger air bag can cause fatal injuries, especially if the occupant is positioned excessively close to the steering wheel or passenger air bag.**

⚠ WARNING - Airbag inflation

Sit as far back as possible from the steering wheel while still maintaining comfortable control of your vehicle. A distance of at least 25 cm (10 in.) from your chest to the steering wheel is recommended. Failure to do so can result in airbag inflation injuries to the driver.

Noise and smoke

When inflated, the air bags make a loud noise and leave smoke and powder in the air inside the vehicle. This is normal and is a result of the ignition of the air bag inflator. After the air bag inflates, you may feel substantial discomfort in breathing due to the contact of your chest with both the seat belt and the air bag, as well as from breathing the smoke and powder. **Open your doors and/or windows as soon as possible after impact in order to reduce discomfort and prevent prolonged exposure to the smoke and powder.**

Though smoke and powder are non-toxic, it may cause irritation to the skin (eyes, nose and throat, etc). If this is the case, wash and rinse with cold water immediately and consult a doctor if the symptom persists.

⚠ WARNING - Hot components

Do not touch the air bag storage area's internal components immediately after airbag inflation. The air bag related parts in the steering wheel, instrument panel and the roof rails above the front and rear doors are very hot. Hot components can result in burn injuries.

⚠ WARNING

Do not install or place any accessories near air bag deployment areas, such as the instrument panel, windows, pillars, and roof rails.

Such objects may become dangerous projectiles if the airbag inflates.

Do not install a child restraint on the front passenger's seat

1JBH3051

Never place a rear-facing child restraint in the front passenger's seat. If the air bag deploys, it would impact the rear-facing child restraint, causing serious or fatal injury.

In addition, do not place front-facing child restraints in the front passenger's seat. If the front passenger air bag inflates, it could cause serious or fatal injuries to the child.

⚠ WARNING - Air bag deployment

When children are seated in the rear outboard seats of a vehicle equipped with side and/or curtain air bags, install the child restraint system as far away from the door side as possible. Inflation of the side and/or curtain air bags could impact the child.

Air bag warning light

W7-147

The purpose of air bag warning light in your instrument panel is to alert you of a potential problem with your air bag system, which could include your side and/or curtain air bags used for rollover protection.

SRS components and functions

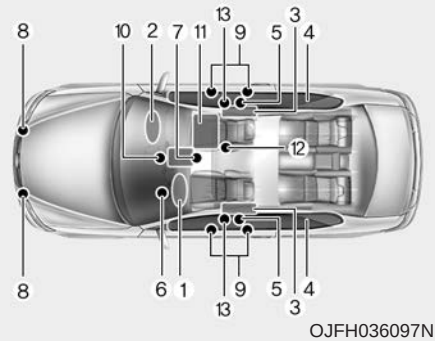

OJFH036097N

The SRS consists of the following components:

1. Driver's front air bag module
2. Passenger's front air bag module
3. Side air bag modules
4. Curtain air bag modules
5. Retractor pre-tensioner assemblies
6. Air bag warning light
7. SRS control module (SRSCM)/ Rollover sensor
8. Front impact sensors
9. Side impact sensors
10. PASSENGER AIR BAG “OFF” indicator (Front passenger’s seat only)
11. Occupant detection system (Front passenger’s seat only)
12. Front passenger’s seat belt buckle sensor
13. Emergency fastening device (EFD)

W7-147

If the air bag warning light is illuminated for more than 6 seconds after engine start/stop button has been changed to ON, or of it illuminates during vehicle operation, an SRS component may not be functioning properly and you should have your vehicle checked by an authorized Kia dealer.

If any of the following conditions occur, this indicates a malfunction in the air bag system. Have an authorized Kia dealer inspect the air bag system as soon as possible.

- The light does not turn on briefly when you change the engine start/stop button to ON.
- The light stays on after illuminating for approximately 6 seconds.
- The light comes on while the vehicle is in motion.
- The light blinks when engine start/stop button is ON position.

Driver's front air bag (1)

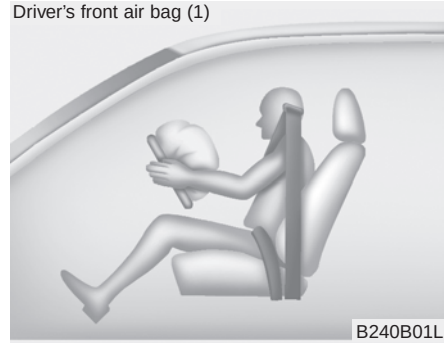

The front air bag modules are located both in the center of the steering wheel and in the front passenger's panel above the glove box. When the SRSCM detects a sufficiently severe impact to the front of the vehicle, it will automatically deploy the front air bags.

Driver's front air bag (2)

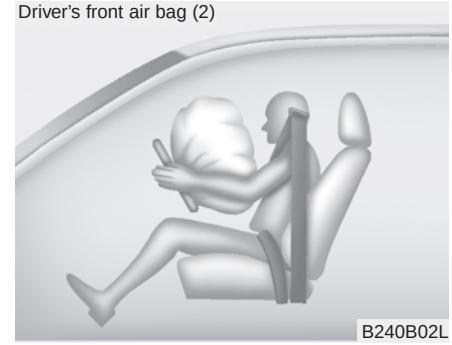

Upon deployment, tear seams molded directly into the pad covers will separate under pressure from the expansion of the air bags. Further opening of the covers then allows full inflation of the air bags.

Driver's front air bag (3)

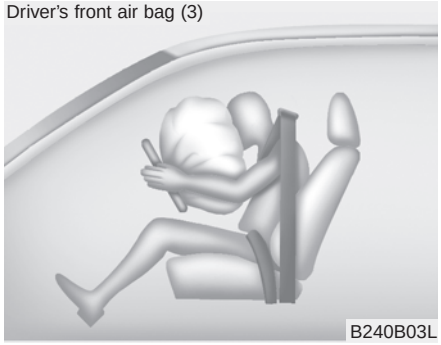

A fully inflated air bag, in combination with a properly worn seat belt, slows the driver's or the passenger's forward motion, reducing the risk of head and chest injury.

After complete inflation, the air bag immediately starts deflating, enabling the driver to maintain forward visibility and the ability to steer or operate other controls.

Passenger's front air bag

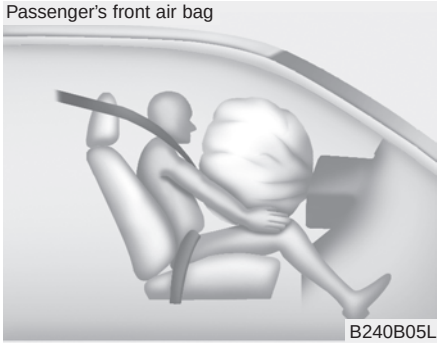

⚠ WARNING - Air bag obstructions

Do not install or place any accessories on the steering wheel, instrument panel, or on the front passenger's panel above the glove box in a vehicle. Such objects may become dangerous projectiles if the air bag deploys.

⚠ WARNING - Flying objects

Do not place any objects (an umbrella, bag, etc.) between the front door and the front seat. Such objects may become dangerous projectiles if the side airbag inflates.

- If an air bag deploys, there may be a loud noise followed by a fine dust released in the vehicle. These conditions are normal and are not hazardous - the air bags are packed in this fine powder. The dust generated during air bag deployment may cause skin or eye irritation as well as aggravate asthma for some persons. Always wash all exposed skin areas thoroughly with cold water and a mild soap after an accident in which the air bags were deployed.

- The SRS can function only when engine start/stop button is ON position. If the SRS air bag warning light does not illuminate, or continuously remains on after illuminating for about 6 seconds when engine start/stop button is ON position, or after the engine is started, comes on while driving, the SRS is not working properly. If this occurs, have your vehicle immediately inspected by an authorized Kia dealer.

✻ NOTICE

Before you replace a fuse or disconnect a battery terminal, change Engine Start/Stop button to the OFF position. Never remove or replace the air bag related fuse(s) when engine start/stop button is ON position. Failure to heed this warning will cause the SRS air bag warning light to illuminate.

Occupant Detection System (ODS)

OJFA035078

Your vehicle is equipped with an occupant detection system in the front passenger's seat.

The occupant detection system is designed to detect the presence of a properly-seated front passenger and determine if the passenger's front air bag should be enabled (may inflate) or not. Only the front passenger front air bag is controlled by the Occupant Detection System.

Do not put anything in front of the passenger air bag OFF indicator.

Main components of the occupant detection system

- An detection device located within the front passenger seat cushion.
- An electronic system which determines whether the passenger air bag systems should be activated or deactivated.
- An indicator light located on the instrument panel which illuminates the words PASSENGER AIR BAG “OFF” indicates the front passenger air bag system is deactivated.
- The instrument panel air bag warning light is interconnected with the occupant detection system.

If the front passenger seat is occupied by a person that the system determines to be of appropriate size, and he/she sits properly (sitting upright with the seatback in an upright position, centered on the seat cushion with their seat belt on, legs comfortably extended and their feet on the floor), the PASSENGER AIR BAG “OFF” indicator will turn off and the front passenger's air bag will be able to inflate, if necessary, in frontal crashes.

You will find the PASSENGER AIR BAG “OFF” indicator on the center facia panel. This system detects the conditions 1~4 in the following table and activates or deactivates the front passenger air bag based on these conditions.

Always be sure that you and all vehicle occupants are seated and restrained properly (sitting upright with the seat in an upright position, centered on the seat cushion, with the person’s legs comfortably extended, feet on the floor, and wearing the safety belt properly) for the most effective protection by the air bag and the safety belt.

- The ODS (Occupant Detection System) may not function properly if the passenger takes actions which can defeat the detection system. These include:

(1) Failing to sit in an upright position.

(2) Leaning against the door or center console.

(3) Sitting towards the sides or the front of the seat.

(4) Putting legs on the dashboard or resting them on other locations which reduce the passenger weight on the front seat.

(5) Improperly wearing the safety belt.

(6) Reclining the seat back.

Condition and operation in the front passenger occupant detection system

Condition detected by the occupant classification system	Indicator/Warning light		Devices
	"PASSENGER AIR BAG OFF" indicator light	SRS warning light	Front passenger air bag
1. Adult*[1]	Off	Off	Activated
2. Child restraint system with child under 12 months old *[2] *[3] *[4]	On	Off	Deactivated
3. Unoccupied	On	Off	Deactivated
4. Malfunction in the system	Off	On	Activated

*[1] The system judges a person of adult size as an adult. When a smaller adult sits in the front passenger seat, the system may recognize him/her as a child depending on his/her physique and posture.

*[2] Do not allow children to ride in the front passenger seat. When a larger child who has outgrown a child restraint system sits in the front passenger seat, the system may recognize him/her as an adult depending upon his/her physique or sitting position.

*[3] Never install a child restraint system on the front passenger seat.

*[4] The PASSENGER AIR BAG "OFF" indicator may turn on or off when a child above 12 months to 13 years old (with or without child restraint system) sits in the front passenger seat. This is a normal condition.

⚠ CAUTION

- ***Do not install a child restraint seat in the passenger seat when the seat is heavily soaked with any type of liquid.***
- ***Do not alter or remodel the ODS (Occupant Detection System). This may damage the system and prevent its proper function in a collision.***

✻ NOTICE

- Do not use car seat cushions that cover up the surface of the seat and aftermarket manufactured passenger seat heaters.
- After conducting car interior cleaning using steam or detergent, the seat should be dried properly. Afterward, check for normal operation of the "PASS AIR BAG "OFF"" and air bag warning lights.
- Any service related to the passenger seat and the ODS must be done at Kia service center.
- After the passenger seat has been removed or installed for repair purposes, check for normal operation of the "PASS AIR BAG "OFF"" and air bag warning lights with a person seated or not seated in the passenger seat.

⚠ WARNING - ODS system

Riding in an improper position or placing items on or under the passenger seat may interfere with the normal operation of the ODS (Occupant Detection System). It is important for the driver to instruct the passenger as to the proper seating instructions as contained in this manual.

✻ NOTICE

When the “PASS AIR BAG “OFF”” symbol is illuminated, the passenger air bag system will not operate. The passenger air bag system will operate when necessary if the symbol is not illuminated.

✻ NOTICE

Do not modify or replace the front passenger seat. Don't place anything on or attach anything such as a blanket, front seat cover or after market seat heater to the front passenger seat. This can adversely affect the occupant detection system.

⚠ WARNING - ODS System

Riding in an improper position adversely affects the Occupant Detection System and may result in the deactivation of the front passenger airbag. It is important for the driver to instruct the passenger as to the proper seating instructions as contained in this manual.

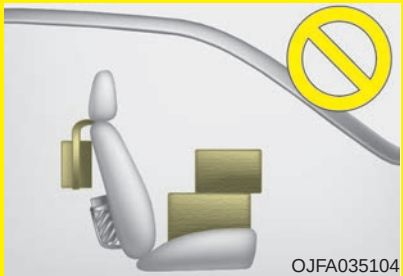

- **Do not place a heavy load in the front passenger seatback pocket or on the front passenger seat.**

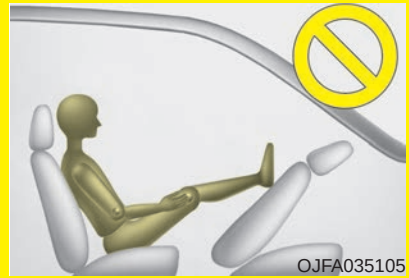

- **Do not place feet on the front passenger seatback.**

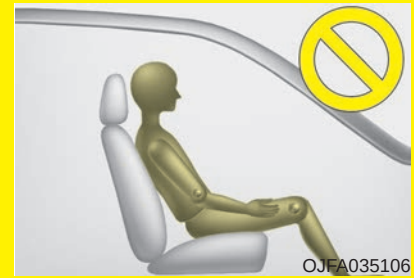

- **Never sit with hips shifted towards the front of the seat.**

(Continued)

(Continued)

- **Never excessively recline the front passenger seatback.**

- **Never place feet on the dashboard.**

- **Never lean on the door or center console.**
- **Never sit on one side of the front passenger seat.**

(Continued)

(Continued)

- **Do not use car seat accessories such as thick blankets and cushions which cover up the car seat surface.**

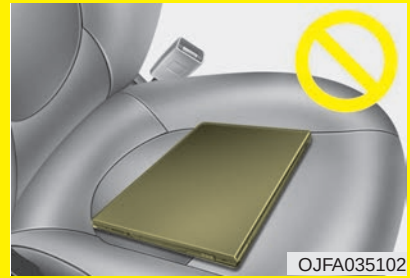

- **Do not place electronic devices such as laptops, DVD player, or conductive materials such as water bottles on the passenger seat.**

Do not use electronic devices such as laptops and satellite radios which use inverter chargers.

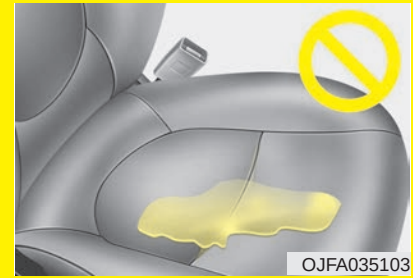

- **Wet Passenger Seat**

Do not spill liquid in the passenger seat. Spilled liquid on the passenger seat may cause the air bag warning light to illuminate or malfunction. If any liquid is spilled, make sure the seat has been completely dried before driving the vehicle.

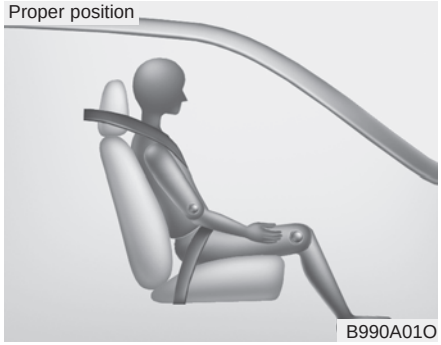

When an adult is seated in the front passenger seat, if the PASSENGER AIR BAG “OFF” indicator is on, change Engine Start/Stop button to the OFF position and ask the passenger to sit properly (sitting upright with the seat back in an upright position, centered on the seat cushion with their seat belt on, legs comfortably extended and their feet on the floor). Restart the engine and have the person remain in that position. This will allow the system to detect the person and to enable the passenger air bag.

If the PASSENGER AIR BAG “OFF” indicator is still on, ask the passenger to move to the rear seat.

⚠ WARNING - “AIR BAG OFF” light

Do not allow an adult passenger to ride in the front seat when the PASSENGER AIR BAG “OFF” indicator is illuminated, because the air bag will not deploy in the event of a crash. The driver must instruct the passenger to reposition himself in the seat. Failure to properly position yourself may lead to air bag deactivation resulting in air bag non-deployment in a collision. If the PASSENGER AIR BAG “OFF” indicator remains illuminated after the passenger repositions themselves properly and the car is restarted, it is recommended that passenger move to the rear seat because the passenger's front air bag will not deploy.

✻ NOTICE

The PASSENGER AIR BAG “OFF” indicator illuminates for about 4 seconds after Engine Start/Stop button is turned to the ON position after the engine is started. If the front passenger seat is occupied, the occupant detection sensor will then classify the front passenger after several more seconds.

- Even though your vehicle is equipped with the occupant detection system, never install a child restraint system in the front passenger's seat. A deploying air bag can forcefully strike a child resulting in serious injuries or death. Any child age 13 and under should ride in the rear seat. Children too large for child restraints should use the available lap/shoulder belts. No matter what type of crash, children of all ages are safer when restrained in the rear seat.
- If the PASSENGER AIR BAG “OFF” indicator is illuminated when the front passenger's seat is occupied by an adult and he/she sits properly (sitting upright with the seatback in an upright position, centered on the seat cushion with their seat belt on, legs comfortably extended and their feet on the floor), have that person sit in the rear seat. Any child age 13 and under should ride in the rear seat. Children too large for child restraints should use the available lap/shoulder belts. No matter what type of crash, children of all ages are safer when restrained in the rear seat.

If the occupant detection system is not working properly, the SRS air bag warning light on the instrument panel will illuminate because the passenger's front air bag is connected with the occupant detection system. If there is a malfunction of the occupant detection system, the PASSENGER AIR BAG “OFF” indicator will not illuminate and the passenger's front air bag will inflate in frontal impact crashes even if there is no occupant in the front passenger's seat.

Driver's and passenger's front air bag

■ Driver’s front air bag

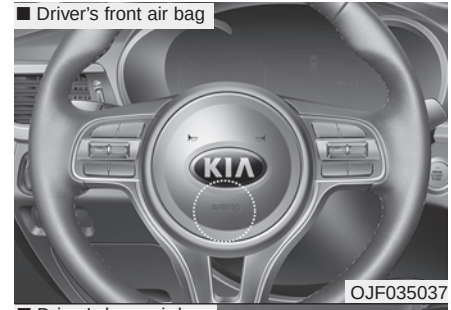

OJF035037

■ Driver’s knee air bag

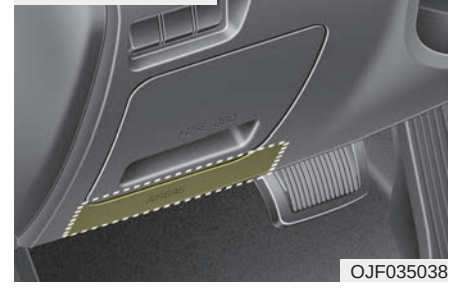

OJF035038

■ Passenger's front air bag

OJF035039

Your vehicle is equipped with an Advanced Supplemental Restraint (Air Bag) System and lap/shoulder belts at both the driver and passenger seating position.

The indication of the system's presence are the letters "AIRBAG" located on the air bag pad cover on the steering wheel and the passenger's side front panel pad above the glove box.

The SRS consists of air bags installed under the pad covers in the center of the steering wheel and the passenger's side front panel above the glove box.

The purpose of the SRS is to provide the vehicle's driver and/or the front passenger with additional protection than that offered by the seat belt system alone in case of a frontal impact of sufficient severity. The SRS uses sensors to gather information about the driver's and front passenger's seat belt usage and impact severity.

The seat belt buckle sensor determines if the front passenger's seat belt is fastened.

These sensors provide the ability to control the SRS deployment based on whether or not the seat belts are fastened, and how severe the impact is.

The advanced SRS offers the ability to control the air bag inflation with two levels. A first stage level is provided for moderate-severity impacts. A second stage level is provided for more severe impacts.

The passenger's front air bag is designed to help reduce the injury of children sitting close to the instrument panel in low speed collisions. However, children are safer if they are restrained in the rear seat.

According to the impact severity and seat belt usage, the SRSCM (SRS Control Module) controls the air bag inflation. Failure to properly wear seat belts can increase the risk or severity of injury in an accident.

Additionally, your vehicle is equipped with an occupant detection system in the front passenger's seat. The occupant detection system detects the presence of a passenger in the front passenger's seat and will turn off the front passenger's air bag under certain conditions. For more detail, see "Occupant detection system" in this chapter.

Modification to the seat structure can cause the air bag to deploy at a different level than should be provided.

Manufacturers are required by government regulations to provide a contact point concerning modifications to the vehicle for persons with disabilities, which modifications may affect the vehicle's advanced air bag system. That contact is Kia's toll-free Customer Experience Department at 1-877-KIA-AUTO (1-877-542-2886).

However, Kia does not endorse nor will it support any changes to any part or structure of the vehicle that could affect the advanced air bag system, including the occupant detection system.

⚠ WARNING - Replacement / modifications

The front passenger seat, dashboard or door should not be replaced except by an authorized Kia dealer using original Kia parts designed for this vehicle and model. Any other such replacement or modification could adversely affect the operation of the occupant detection system and your advanced air bags.

Advanced air bags are combined with pre-tensioner seat belts to help provide enhanced occupant protection in frontal crashes. Front air bags are not intended to deploy in collisions in which sufficient protection can be provided by the pre-tensioner seat belt.

✻ NOTICE

Air bags can only be used once – have an authorized Kia dealer replace the air bag immediately after deployment.

Front air bags are not intended to deploy in side-impact, rear-impact or rollover crashes. However, when frontal deployment threshold is satisfied at side-impact, front air bags may deploy. In addition, front air bags will not deploy in frontal crashes below the deployment threshold.

⚠ WARNING - SRS Wiring

Do not tamper with or disconnect SRS wiring or other components of the SRS system. Doing so could result in injury due to accidental deployment of the air bags or by rendering the SRS inoperative.

⚠ WARNING - No attaching objects

No objects (such as dash pad cover, cellular phone holder, cup holder, perfume or stickers) should be placed over or near the air bag modules on the steering wheel, instrument panel, windshield glass, and the front passenger's panel above the glove box. Such objects could cause harm if the vehicle is in a crash severe enough to cause the air bags to deploy.

Do not place any objects over the air bag or between the air bag and yourself.

⚠ WARNING

Never place or insert any object into any small opening near side airbag labels attached to the vehicle seats. When the air bag deploys, the object may affect the deployment and result in unexpected accident or bodily harm.

Side air bag

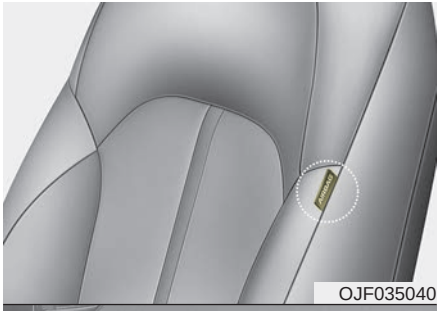

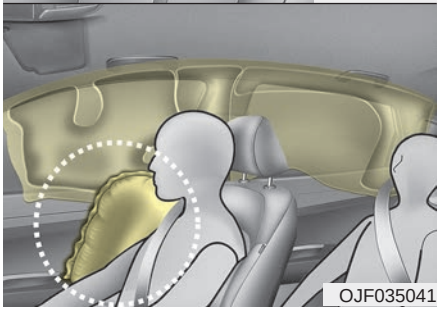

❊ The actual air bags in the vehicle may differ from the illustration.

Your vehicle is equipped with a side air bag in each front seat.

The purpose of the air bag is to provide the vehicle's driver and/or the front passenger with additional protection than that offered by the seat belt alone.

- The side air bags are designed to deploy during certain side-impact collisions, depending on the crash severity, angle, speed and point of impact. However, when side deployment threshold is satisfied at front-impact, side air bags may deploy.
- The side air bags may deploy on the side of the impact or on both sides.
- The side and/or curtain air bags on both sides of the vehicle will deploy if a rollover or possible rollover is detected.
- The side air bags are not designed to deploy in all side impact or rollover situations.

⚠ WARNING - Unexpected deployment

Avoid impact to the side impact airbag sensor when Engine Start/Stop button is ON to prevent unexpected deployment of the side air bag.

- The side air bag is supplemental to the driver's and the passenger's seat belt systems and is not a substitute for them. Therefore your seat belts must be worn at all times while the vehicle is in operation.
- For best protection from the side air bag system and to avoid being injured by the deploying side air bag, both front seat occupants should sit in an upright position with the seat belt properly fastened. The driver's hands should be placed on the steering wheel at the 9:00 and 3:00 positions. The passenger's arms and hands should be placed on their laps.

⚠ WARNING - Deployment

Do not install any accessories including seat covers, on the side or near the side air bag as this may affect the deployment of the side air bags.

- If seat or seat cover is damaged, have the vehicle checked and repaired by an authorized Kia dealer. Inform the dealer that your vehicle is equipped with side air bags and an occupant detection system.

⚠ WARNING - Flying objects

Do not place any objects (an umbrella, bag, etc.) between the front door and the front seat. Such objects may become dangerous projectiles if the side airbag inflates.

⚠ WARNING - No attaching objects

- **Do not place any objects over the air bag or between the air bag and yourself. Also, do not attach any objects around the area the air bag inflates such as the door, side door glass, front and rear pillar.**
- **Do not put any objects between the side airbag label and seat cushion. It could cause harm if the vehicle is in a crash severe enough to cause the air bags to deploy.**
- **Never place or insert any object into any small opening near side airbag labels attached to the vehicle seats. When the air bag deploys, the object may affect the deployment and result in unexpected accident or bodily harm.**
- **Do not install any accessories on the side or near the side air bags.**

Curtain air bag

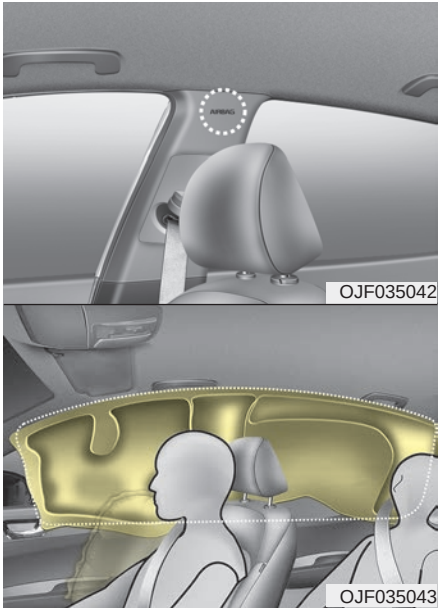

❊ The actual air bags in the vehicle may differ from the illustration.

Curtain air bags are located along both sides of the roof rails above the front and rear doors.

They are designed to help protect occupants in certain side impacts and to help prevent them from ejecting out of the vehicle as a result of a rollover, especially when the seatbelts are also in use.

- The curtain air bags are designed to deploy during certain side impact collisions, depending on the crash severity, angle, speed and point of impact. However, when side deployment threshold is satisfied at front-impact, side air bags may deploy.
- The curtain air bags may deploy on the side of the impact or on both sides.
- Also, the curtain air bags on both sides of the vehicle will deploy in certain rollover situations.
- The curtain air bags are not designed to deploy in all side impact or rollover situations.

Do not allow the passengers to lean their heads or bodies against the doors, put their arms on the doors, stretch their arms out of the window or place objects between the doors and passengers when they are seated on seats equipped with side impact and/or curtain air bags.

❊ NOTICE

Never try to open or repair any components of the side and curtain air bag system. This should only be done by an authorized Kia dealer.

⚠ WARNING - No attaching objects

- **Do not place any objects over the air bag. Also, do not attach any objects around the area the air bag inflates such as the door, side door glass, front and rear pillar, roof side rail.**
- **Do not hang hard or breakable objects on the coat hook.**
- **Do not hang heavy items on the coat hooks for safety reasons.**

Why didn't my air bag go off in a collision? (Inflation and non-inflation conditions of the air bag)

There are many types of accidents in which the air bag would not be expected to provide additional protection.

These include rear impacts, second or third collisions in multiple impact accidents, as well as low speed impacts.

Air bag collision sensors

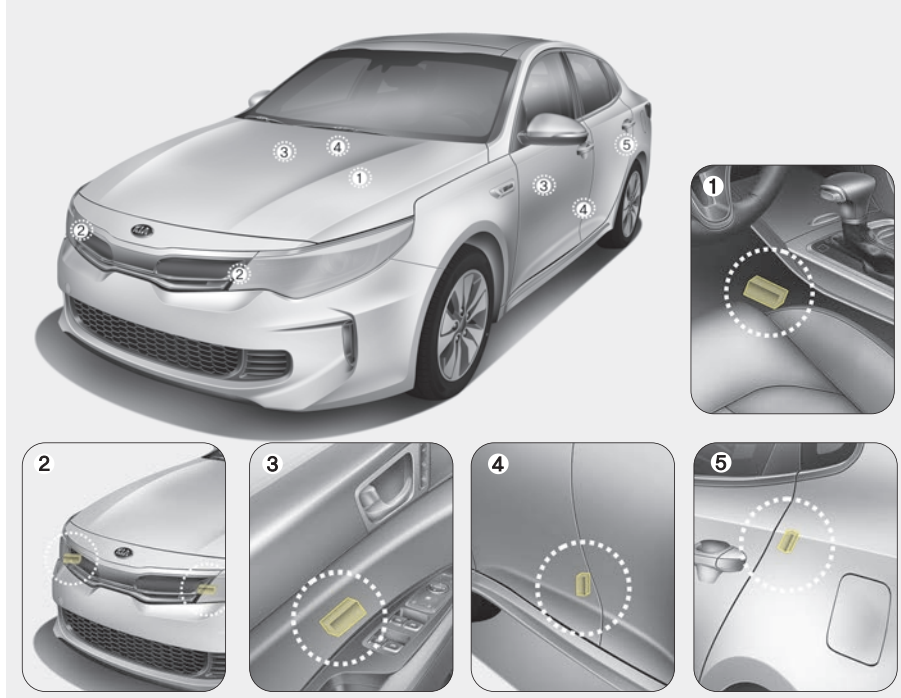

OJFHP036045N/OJF035064/OJFHP036047N/OJF035048/OJF035049/OJF038084

(1) SRS control module/ Rollover sensor
(2) Front impact sensor
(3) Side impact sensor
(4) Side impact sensor
(5) Side impact sensor

⚠ WARNING - Air bag sensors

- **Do not hit or allow any objects to impact the locations where air bags or sensors are installed.**

  This may cause unexpected air bag deployment, which could result in serious personal injury or death.
- **If the installation location or angle of the sensors is altered in any way, the air bags may deploy when they should not or they may not deploy when they should.**

  Therefore, do not try to perform maintenance on or around the air bag sensors. Have the vehicle checked and repaired by an authorized Kia dealer.

Problems may arise if the sensor installation angles are changed due to the deformation of the front bumper, front end module, body or front doors where side collision sensors are installed. Have the vehicle checked and repaired by an authorized Kia dealer.

Installing bumper guards (or side step or running board) or replacing a bumper (or front door module) with non-genuine parts may adversely affect your vehicle's collision and air bag deployment performance.

Air bag inflation conditions

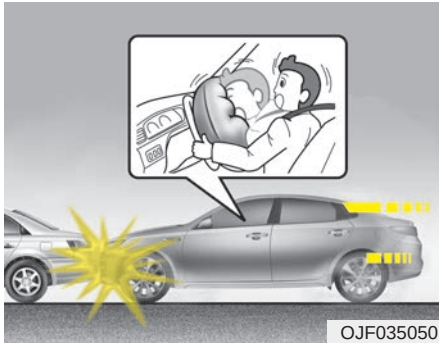

Front air bags

Front air bags are designed to inflate in a frontal collision depending on the intensity, speed or angles of impact of the front collision.

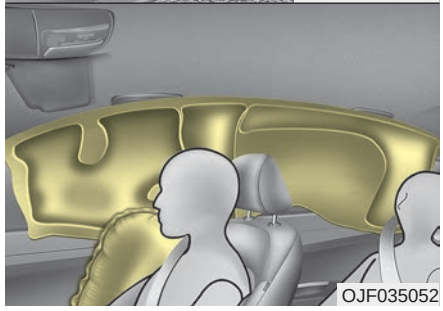

❊ The actual air bags in the vehicle may differ from the illustration.

Side and/or curtain air bags

Side and/or curtain air bags are designed to inflate when an impact is detected by side collision sensors depending on the strength, speed or angles of impact resulting from a side impact collision.

Also, the side and curtain air bags are designed to inflate when a rollover is detected by a rollover sensor.

Although the front air bags (driver's and front passenger's air bags) are designed to inflate in frontal collisions, they also may inflate in other types of collisions if the front impact sensors detect a sufficient frontal force in another type of impact. Side and curtain air bags are designed to inflate in certain side impact collisions. They may inflate in other types of collisions where a side force is detected by the sensors. Side air bag and/or curtain air bags may also inflate where rollover sensors indicate the possibility of a rollover occurring (even if none actually occurs) or in other situations, including when the vehicle is tilted while being towed.

Even where side and/or curtain air bags would not provide impact protection in a rollover, however, they will deploy to prevent ejection of occupants, especially those who are restrained with seat belts.

If the vehicle chassis is impacted by bumps or objects on unimproved roads, the air bags may deploy. Drive carefully on unimproved roads or on surfaces not designed for vehicle traffic to prevent unintended air bag deployment.

Air bag non-inflation conditions

- In certain low-speed collisions, the air bags may not deploy. The air bags are designed not to deploy in such cases because they may not provide benefits beyond the protection of the seat belts in such collisions.

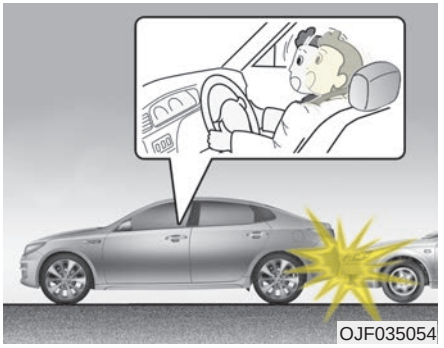

- Air bags are not designed to inflate in rear collisions, because occupants are moved backward by the force of the impact. In this case, inflated air bags would not be able to provide any additional benefit.

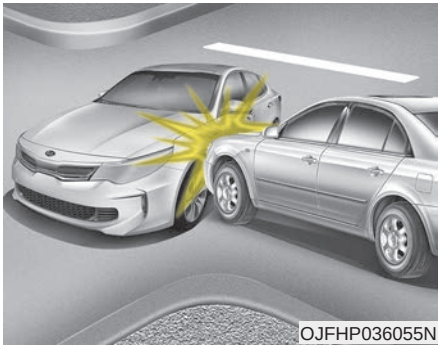

- Front air bags may not inflate in side impact collisions, because occupants move to the direction of the collision, and thus in side impacts, frontal air bag deployment would not provide additional occupant protection.

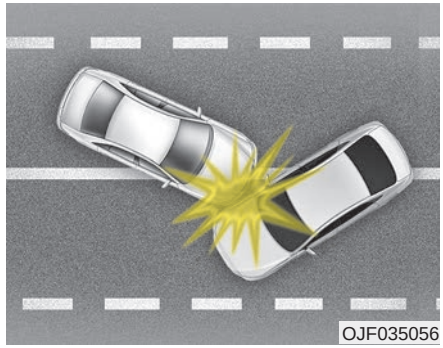

- In an angled collision, the force of impact may direct the occupants in a direction where the air bags would not be able to provide any additional benefit, and thus the sensors may not deploy any air bags.

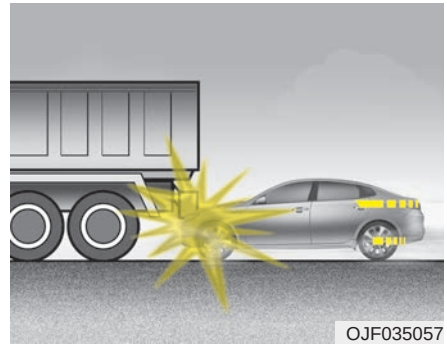

- Just before impact, drivers often brake heavily. Such heavy braking lowers the front portion of the vehicle causing it to “ride” under a vehicle with a higher ground clearance. Air bags may not inflate in this "under-ride" situation because deceleration forces that are detected by sensors may be significantly reduced by such “under-ride” collisions.

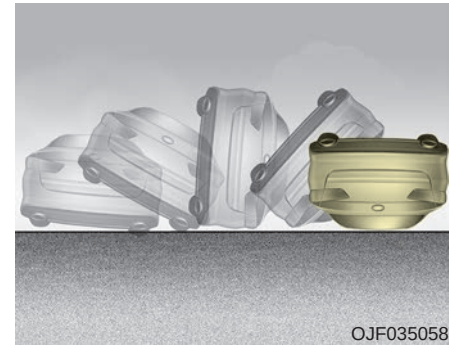

- Front air bags may not inflate in all rollover accidents where the SRSCM indicates that the front air bag deployment would not provide additional occupant protection.

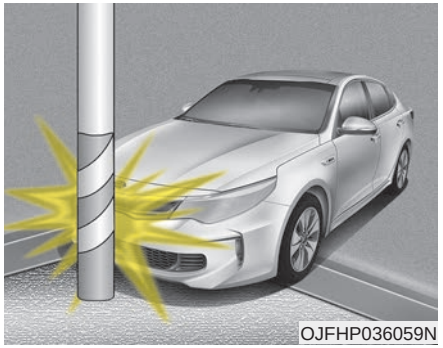
OJFHP036059N

- Air bags may not inflate if the vehicle collides with objects such as utility poles or trees, where the point of impact is concentrated to one area and the full force of the impact is not delivered to the sensors.

SRS Care

The SRS is virtually maintenance-free and so there are no parts you can safely service by yourself. If the SRS air bag warning light does not illuminate, or continuously remains on, have your vehicle immediately inspected by an authorized Kia dealer.

Any work on the SRS system, such as removing, installing, repairing, or any work on the steering wheel, the front passenger's panel, front seats and roof rails must be performed by an authorized Kia dealer. Improper handling of the SRS system may result in serious personal injury.

For cleaning the air bag pad covers, use only a soft, dry cloth or one which has been moistened with plain water. Solvents or cleaners could adversely affect the air bag covers and proper deployment of the system.

If components of the air bag system must be discarded, or if the vehicle must be scrapped, certain safety precautions must be observed. An authorized Kia dealer knows these precautions and can give you the necessary information. Failure to follow these precautions and procedures could increase the risk of personal injury.

⚠ WARNING - Tampering with SRS

Do not tamper with or disconnect SRS wiring, or other components of the SRS system. Doing so could result in the accidental inflation of the air bags or by rendering the SRS inoperative.

⚠ WARNING - Towing Vehicle

Always have the ignition off when your vehicle is being towed. The side air bags may inflate if the vehicle is tilted such as when being towed because of the rollover sensors in the vehicle.

Adding equipment to or modifying your air bag-equipped vehicle

If you modify your vehicle by changing your vehicle's frame, bumper system, front end or side sheet metal or ride height, this may affect the operation of your vehicle's air bag system.

Air bag warning label

Air bag warning labels, some required by the Canada Motor Vehicle Safety Standards (CMVSS), are attached to the sunvisor to alert the driver and passengers of potential risks of the air bag system.

Features of your vehicle

Smart key 4-4
- Record your key number 4-4
- Smart key function 4-4
- Loss of the smart key 4-6
- Smart key precautions 4-7
- Battery replacement 4-8
- Smart key immobilizer system. 4-9

Theft-alarm system 4-11
- Armed stage 4-11
- Theft-alarm stage 4-12
- Disarmed stage. 4-12

Door locks 4-14
- Operating door locks from outside the vehicle 4-14
- Operating door locks from inside the vehicle. 4-15
- Impact sensing door unlock system. 4-17
- Child-protector rear door lock 4-17

Smart trunk 4-19
- How to use the smart trunk 4-19
- How to deactivate the smart trunk function using the smart key 4-21
- Detecting area 4-22
- Emergency trunk safety release. 4-23

Windows 4-24
- Power windows 4-25

Hood. 4-29
- Opening the hood 4-29
- Hood open warning. 4-29
- Closing the hood 4-30

Fuel filler lid (Hybrid) 4-31
- Opening the fuel filler lid 4-31
- Closing the fuel filler lid 4-31
- Emergency fuel filler lid release. 4-34

Fuel filler lid (plug-in Hybrid) 4-35
- Opening the fuel filler lid 4-35
- Closing the fuel filler lid 4-37
- Emergency fuel filler lid release. 4-37

Panoramic sunroof 4-38
- Sunroof open warning. 4-39
- Sunshade. 4-40
- Sliding the sunroof 4-41
- Tilting the sunroof. 4-43
- Closing the sunroof 4-43
- Resetting the sunroof 4-43

Steering wheel. 4-45
- Electric Power Steering (EPS) 4-45
- Tilt and telescopic steering 4-46
- Heated steering wheel 4-47
- Horn 4-48

Mirrors 4-49
• Inside rearview mirror 4-49
• Outside rearview mirror 4-50
Instrument cluster 4-54
• Instrument cluster control 4-55
• LCD display control 4-55
• Gauges 4-56
• Transaxle shift indicator 4-61
LCD display 4-62
• LCD modes 4-62
• Service mode 4-63
• User settings mode 4-65
Trip modes (Trip computer) 4-70
• Trip modes 4-70
• Fuel economy 4-70
• Trip A/B 4-73
• Digital speedometer 4-74
• One time driving information mode 4-74
• Turn by turn mode 4-74
• Assist mode 4-75
• A/V mode 4-75
• Warning messages 4-75
Warning and indicator lights 4-85
• Warning lights 4-85
• Indicator lights 4-93
Parking distance warning-reverse 4-99
• Operation of the parking distance warning-reverse 4-99
• Non-operational conditions of the parking distance warning-reverse system 4-100
• Parking distance warning-reverse system precautions 4-101
• Self-diagnosis 4-101
Rear view monitor 4-102
360° camera monitoring system 4-103
Lighting 4-104
• Battery saver function 4-104
• Daytime running light 4-104
• Lighting control 4-104
• High beam operation 4-106
• High beam assist 4-107
• Turn signals and lane change signals 4-110
• Check headlight 4-111
• Headlight leveling device 4-112
• AFLS (Adaptive Front Lighting System) 4-112
Wipers and washers 4-113
• Windshield wipers 4-113
• Front windshield washers 4-115
Interior lights 4-117
• Automatic turn off function 4-117
• Room lamp 4-117

• Map lamp 4-118
• Trunk room lamp 4-119
• Vanity mirror lamp 4-119
• Glove box lamp 4-119
Welcome system 4-120
• Headlight (Headlamp) escort function 4-120
• Interior light. 4-120
• Pocket lamp 4-120
Defroster 4-121
• Rear window defroster 4-121
Automatic climate control system. 4-122
• Automatic heating and air conditioning 4-123
• Manual heating and air conditioning 4-124
• System operation 4-132
• Climate control air filter. 4-134
• Checking the amount of air conditioner refrigerant and compressor lubricant. 4-134
Windshield defrosting and defogging. 4-136
• Automatic climate control system 4-136
• Defogging logic. 4-137
Clean air 4-139
Storage compartments. 4-140
• Center console storage 4-140
• Glove box 4-140
• Sunglass holder 4-141
Interior features 4-142
• Cup holder 4-142
• Bottle holder. 4-142
• Seat warmer. 4-143
• Air ventilation seat 4-144
• Sunvisor 4-144
• Power outlet 4-145
• USB charger. 4-146
• Wireless smart phone charging system. 4-147
• Coat hook 4-150
• Floor mat anchor(s). 4-151
• Side curtain 4-152

SMART KEY

Record your key number

The key code number is stamped on the bar code tag attached to the key set. Should you lose your keys, this number will enable an authorized Kia dealer to duplicate the keys easily. Remove the bar code tag and store it in a safe place. Also, record the code number and keep it in a safe and handy place, but not in the vehicle.

Smart key function

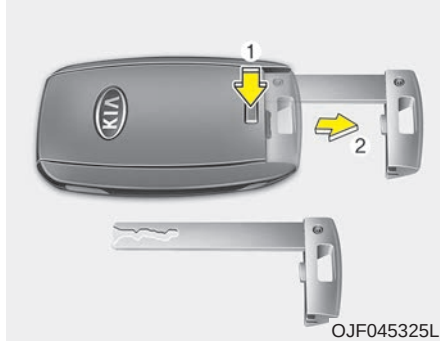

To remove the mechanical key, press and hold the release button(1) and remove the mechanical key (2).

To reinstall the mechanical key, put the key into the hole and push it until a click sound is heard.

With a smart key, you can lock or unlock a door (and trunk) and start the engine.

Refer to the following for more details.

⚠ WARNING - Smart key

Never leave the keys in your vehicle with unsupervised children. Leaving children unattended in a vehicle with a smart key is dangerous. Children copy adults and they could press the start button. The key would enable children to operate power windows or other controls, or even make the vehicle move, which could result in serious bodily injury or death.

Locking

OYDDCO2004

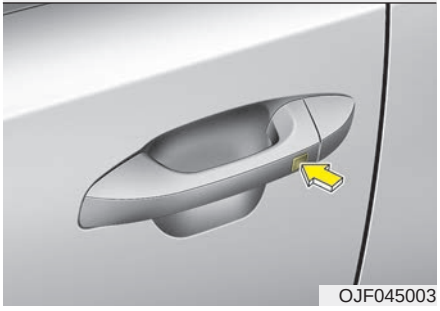

OJF045003

Pressing the button of the front outside door handles with all doors (and trunk) closed and any door unlocked, locks all the doors (and trunk).

The hazard warning lights will blink once to indicate that all doors (and trunk) are locked. The button will only operate when the smart key is within 0.7 ~ 1 m (28 ~ 40 in) from the outside door handle. If you want to make sure that a door has locked, you should look at the door lock button inside the vehicle or pull the outside door handle.

Even though you press the button, the doors will not lock and an audible chime will sound if any of the following occurs:

- The smart key is in the vehicle.
- The ENGINE START/STOP button is in the ACC or ON position.
- Any door except the trunk is opened.

Unlocking

Pressing the button of the front outside door handles with all doors (and trunk) closed and locked, unlocks all the doors (and trunk). The hazard warning lights will blink twice to indicate that all doors (and trunk) are unlocked. The button will only operate when the smart key is within 0.7 ~ 1 m (28 ~ 40 in) from the outside door handle.

When Two press unlock function is activated,

- If you press the Door Unlock button(2) on the smart key, driver's door will unlock.
- If you press Door Unlock button(2) on the smart key within four seconds again, then all the doors will unlock.
- If you press the driver,s outside door handle button, driver's door will unlock.
- If you press the driver,s outside door handle button within four seconds again, then all the doors will unlock.

✻ NOTICE

You can activate or deactivate the Two Press Unlock function. Refer to "User settings" in this chapter.

Trunk unlocking

If you are within 0.7 ~ 1 m (28 ~ 40 in) from the outside trunk handle, with your smart key in possession, the trunk will unlock and open when you press the trunk handle switch.

The hazard warning lights will blink twice to indicate that the trunk is unlocked.

Also, once the trunk is opened and then closed, the trunk will lock automatically.

Panic

1. Press the panic button (4) for more than 1 second.
2. The horn sounds and hazard warning light flash for about 27 seconds.

✻ NOTICE

To stop the horn and lights, press any button on the smart key.

Start-up

You can start the engine without inserting the key. For detailed information refer to the "Engine start/stop button" in chapter 6.

Loss of the smart key

A maximum of 2 smart keys can be registered to a single vehicle.

If you happen to lose your smart key, you will not be able to start the engine. You should immediately take the vehicle and remaining key to your authorized Kia dealer (tow the vehicle, if necessary) to protect it from potential theft.

Smart key precautions

- The smart key will not work if any of the following occur:
  - The smart key is close to a radio transmitter such as a radio station or an airport which can interfere with normal operation of the smart key.
  - The smart key is near a mobile two way radio system or a cellular phone.
  - Another vehicle's smart key is being operated close to your vehicle.
- When the smart key does not work correctly, open and close the door with the mechanical key and contact an authorized Kia dealer.
- If the smart key is in close proximity to your cell phone or smart phone, the signal from the smart key could be blocked by normal operation of your cell phone or smart phone. This is especially important when the phone is active such as making calls, receiving calls, text messaging, and/or sending/receiving emails. Avoid placing the smart key and your cell phone or smart phone in the same pants or jacket pocket and maintain adequate distance between the two devices.

⚠ CAUTION - Transmitter

Keep the transmitter away from water or any liquid, as it can become damaged and not function properly.

✻ NOTICE

If the keyless entry system is inoperative due to exposure to water or liquids, it will not be covered by your manufacturer's vehicle warranty.

Battery replacement

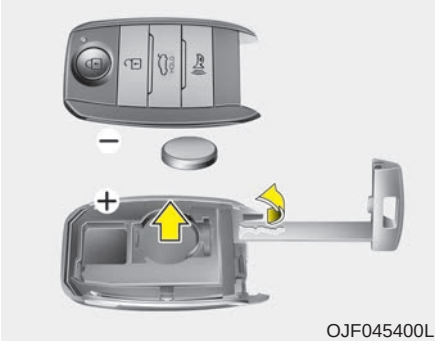

A smart key battery should last for several years, but if the smart key is not working properly, try replacing the battery with a new one. If you are unsure how to use your smart key or replace the battery, contact an authorized Kia dealer.

1. Remove the mechanical key.
2. Pry open the rear cover.
3. Replace the battery with a new battery (CR2032). When replacing the battery, make sure the battery is in the correct position.
4. Install the battery in the reverse order of removal.

- The smart key is designed to give you years of trouble-free use, however it can malfunction if exposed to moisture or static electricity. If you are unsure how to use or replace the battery, contact an authorized Kia dealer.
- Using the wrong battery can cause the smart key to malfunction. Be sure to use the correct battery.
- To avoid damaging the smart key, don't drop it, get it wet, or expose it to heat or sunlight.
- An inappropriately disposed battery can be harmful to the environment and human health. Dispose the battery according to your local law(s) or regulations.

⚠ CAUTION - Smart key damage

Do not drop, get wet or expose the smart key to heat or sunlight, or it will be damaged.

⚠ IC WARNING

This device complies with Industry Canada licence-exempt RSS standard(s).

Operation is subject to the following two conditions: (1) this device may not cause interference, and (2) this device must accept any interference, including interference that may cause undesired operation of the device.

Smart key immobilizer system

Your vehicle is equipped with an electronic engine immobilizer system to reduce the risk of unauthorized vehicle use.

Your immobilizer system is comprised of a small transponder in the smart key and electronic devices inside the vehicle.

With the immobilizer system, whenever you turn the engine start/stop button to the ON position by pressing the button while carrying the smart key, it verifies if the smart key is valid. If the key is determined to be valid, the engine will start.

If the key is determined to be invalid, the engine will not start.

✻ NOTICE

Do not put metal accessories near the ignition switch.
Metal accessories may interrupt the transponder signal and may prevent the engine from being started.

To deactivate the immobilizer system:

Turn the engine start/stop button to the ON position by pressing the button while carrying the smart key.

In order to prevent theft of your vehicle, do not leave spare keys anywhere in your vehicle.

To activate the immobilizer system:

Turn the engine start/stop button to the OFF position. The immobilizer system activates automatically. Without a valid smart key for your vehicle, the engine will not start.

✻ NOTICE

When starting the engine, do not use the key with other immobilizer keys around. Otherwise the engine may not start or may stop soon after it starts. Keep each key separate in order to avoid a starting malfunction.

✻ NOTICE

If you need additional keys or lose your keys, contact an authorized Kia dealer.

⚠ CAUTION - Immobilizer damage

Do not expose your immobilizer system to moisture, static electricity or rough handling. This may damage your immobilizer.

✻ NOTICE - Immobilizer alterations

Do not change, alter or adjust the immobilizer system because it could cause the immobilizer system to malfunction.

This device complies with Industry Canada licence-exempt RSS standard(s).

Operation is subject to the following two conditions:

(1) This device may not cause interference, and

(2) This device must accept any interference, including interference that may cause undesired operation of the device.

✻ NOTICE

Changes or modifications not expressly approved by the party responsible for compliance could void the user's authority to operate the equipment. If the keyless entry system is inoperative due to changes or modifications not expressly approved by the party responsible for compliance, it will not be covered by your manufacturer's vehicle warranty.

THEFT-ALARM SYSTEM

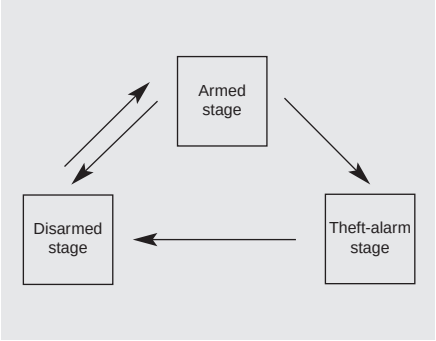

This system is designed to provide protection from unauthorized entry into the vehicle. This system is operated in three stages: the first is the “Armed” stage, the second is the “Theft-alarm” stage, and the third is the “Disarmed” stage. If triggered, the system provides an audible alarm with blinking of the hazard warning lights.

Armed stage

Park the vehicle and stop the engine. Arm the system as described below.

1. Turn off the engine.
2. Make sure that all doors (and trunk) and engine hood are closed and latched.
3. Lock the doors by depressing the door lock button on the smart key.

After completion of the steps above, the hazard warning lights will blink (for smart key, the chime also sounds) once to indicate that the system is armed.

If any door (or trunk) or engine hood remains open, the hazard warning lights and the chime will not operate and the theft-alarm will not arm. If all doors and trunk and engine hood are closed after the lock button is pressed, the hazard warning lights blink once.

The system can also be armed by locking the doors with the key from the front doors; however, the hazard warning lights will not blink using this method.

✻ NOTICE

The theft-alarm system can be deactivated by an authorized Kia dealer. If you want this feature, consult an authorized Kia dealer.

Do not arm the system until all passengers have left the vehicle. If the system is armed while a passenger(s) remains in the vehicle, the alarm may be activated when the remaining passenger(s) leave the vehicle. If any door (or trunk) or engine hood is opened within 30 seconds after the system enters the armed stage, the system is disarmed to prevent an unnecessary alarm.

Theft-alarm stage

The alarm will be activated if any of the following occurs while the system is armed.

- A front or rear door is opened without using the smart key.
- The trunk is opened without using smart key.
- The engine hood is opened.

The horn will sound and the hazard warning lights will blink continuously for approximately 27 seconds, and repeat the horn 3 times unless the system is disarmed. To turn off the system, unlock the doors with the smart key.

Disarmed stage

The system will be disarmed when

- The doors (and trunk) are unlocked with the smart key.

After depressing the unlock button, the hazard warning lights will blink and the chime will sound twice (in smart key) to indicate that the system is disarmed.

After depressing the unlock button, if any door (or trunk) is not opened within 30 seconds, the system will be rearmed.

✻ NOTICE

- **Avoid trying to start the engine while the alarm is activated. The vehicle starting motor is disabled during the theft-alarm stage.**
  If the system is not disarmed with the smart key, open the doors by using the mechanical key and start the engine by directly pressing the Engine Start/Stop button with the smart key.
- **If you lose your keys, consult your authorized Kia dealer.**

⚠ CAUTION - Adjusting alarm system

Do not change, alter or adjust the theft alarm system in your vehicle. Improper installation of the alarm system could damage the vehicle or cause the system to malfunction.

✻ NOTICE

Malfunctions caused by improper alterations, adjustments or modifications to the theft-alarm system are not covered by your vehicle manufacturer warranty.

DOOR LOCKS

Operating door locks from outside the vehicle

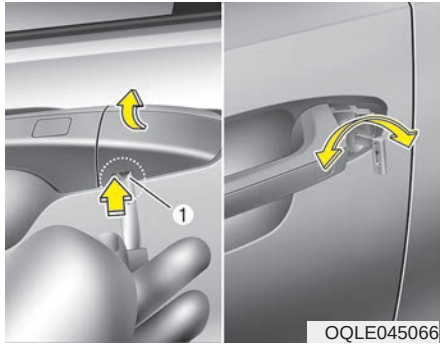

To remove the cover

1. Pull out the door handle.
2. Press the lever (1) located inside the bottom part of the cover with a key or flat-head screwdriver.
3. Push out the cover while pressing the lever.

- Turn the key clockwise to lock and counterclockwise to unlock.
- If you lock the driver's door with a key, all vehicle doors will lock automatically.
- From the driver's door, turn the key to the right once to unlock the door and once more within 4 seconds to unlock all doors.
- Doors can also be locked and unlocked with the transmitter.
- Once the doors are unlocked, they may be opened by pulling the door handle.
- When closing the door, push the door by hand. Make sure the doors are closed securely.

✻ NOTICE

- **In cold and wet climates, door lock and door mechanisms may not work properly due to freezing conditions.**
- **If the door is locked/unlocked multiple times in rapid succession with either the vehicle key or door lock switch, the system may stop operating temporarily in order to protect the circuit and prevent damage to system components.**

⚠ WARNING

- **If you don't close the door securely, the door may open again.**
- **Be careful that someone's body or hands are not trapped when closing the door.**

⚠ WARNING

If people must spend a longer time in the vehicle while it is very hot or cold outside, there is rick of injuries or danger to life. Do not lock the vehicle from the outside when there are people in it.

⚠ CAUTION

Do not frequently repeat opening and closing of doors, or apply excessive force to a door while the door closer is operating.

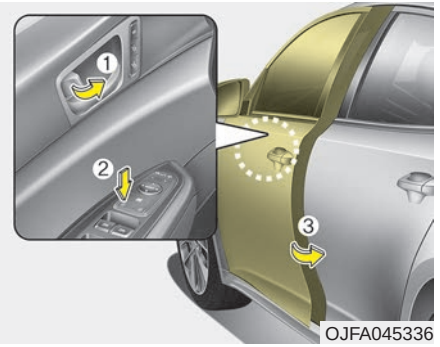

OJFA045336

- To lock a door without the key, push the inside door lock button (1) or central door lock switch (2) to the “Lock” position and close the door (3).
- If you lock the door with the central door lock switch (2), all vehicle doors will lock automatically.

✻ NOTICE

Always turn the Engine Start/Stop button to OFF position, engage the parking brake, close all windows, and lock all doors when leaving your vehicle unattended.

Operating door locks from inside the vehicle

With the door lock button

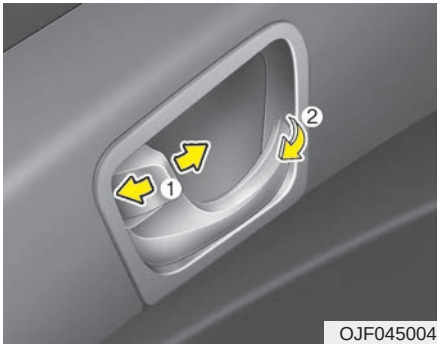

OJF045004

- To unlock a door, pull the door lock button (1) to the “Unlock” position. The red mark on the button will be visible.
- To lock a door, push the door lock button (1) to the “Lock” position. If the door is locked properly, the red mark on the door lock button will not be visible.
- To open a door, pull the door handle (2) outward.

- If the inner door handle of the driver's (or front passenger's) door is pulled when the door lock button is in the lock position, the button will unlock and the door will open.
- Doors cannot be locked if the smart key is in the vehicle and a door is open.

If a power door lock ever fails to function while you are in the vehicle, try one or more of the following techniques to exit:

- Operate the door unlock feature repeatedly (both electronic and manual) while simultaneously pulling on the door handle.
- Operate the other door locks and handles, front and rear.
- Lower a front window and use the key to unlock the door from outside.

⚠ WARNING

Do not pull the inner door handle of driver's(or passenger's) door while the vehicle is moving.

With central door lock switch

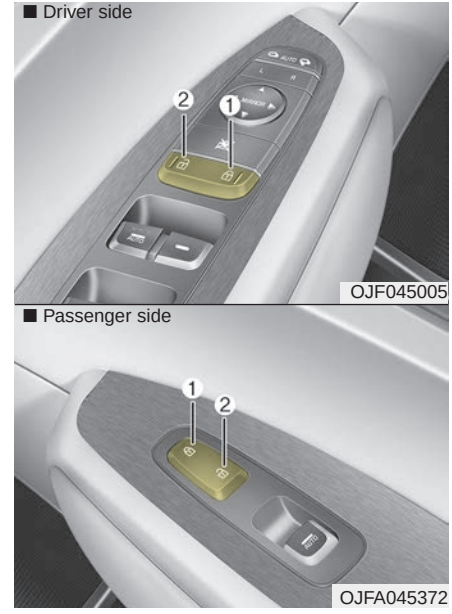

Operate by pressing the central door lock switch.

- When pressing the right portion(1) for driver side or the upper portion(1) for passenger side of the switch, all vehicle doors will lock.

- When pressing the left portion(2) for driver side or the lower portion(2) for passenger side of the switch, all vehicle doors will unlock.
- If the smart key is in the vehicle and any door is opened, the doors will not lock even though the right portion(1) for driver side or upper portion(1) for passenger side of the central door lock switch is pressed.

⚠ WARNING - Doors

The doors should always be fully closed and locked while the vehicle is in motion to prevent accidental opening of the door.

⚠ WARNING - Unattended children/animals

Never leave children or animals unattended in your vehicle. An enclosed vehicle can become extremely hot, causing death or severe injury to unattended children or animals who cannot escape the vehicle.

Impact sensing door unlock system

In the event of air bag deployment resulting from a vehicle impact, all doors will automatically unlock.

✻ NOTICE

You can select some auto door lock/unlock features in "User Settings" For more information, refer to "User Settings" in this chapter.

Child-protector rear door lock

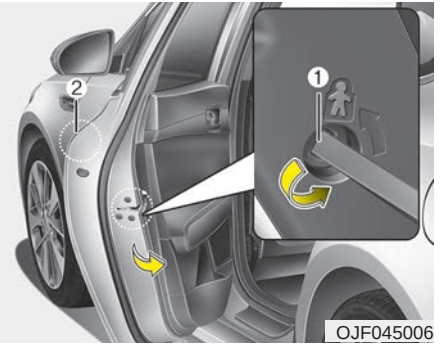

The child safety lock is provided to help prevent children from accidentally opening the rear doors from inside the vehicle. The rear door safety locks should be used whenever children are in the vehicle.

1. Open the rear door.
2. Turn the child safety lock (1) located on the rear edge of the door to the lock ( ) position. When the child safety lock is in the lock position, the rear door will not open even when the inner door handle is pulled.

3. Close the rear door.

To open the rear door, pull the outside door handle (2).

Even though the doors may be unlocked, the rear door will not open by pulling the inner door handle until the rear door child safety lock is unlocked.

⚠ WARNING - Rear door locks

Use the rear door safety locks whenever children are in the vehicle. If a child accidently opens the rear doors while the vehicle is moving, they may fall out.

SMART TRUNK

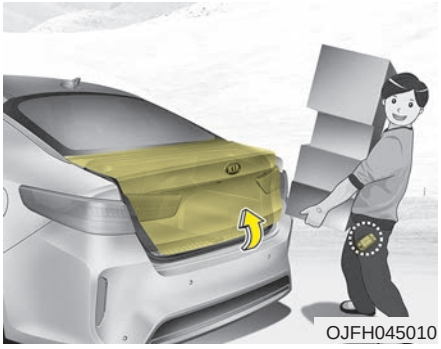

On a vehicle equipped with a smart key, the trunk can be opened with no-touch activation using the Smart Trunk system.

How to use the Smart Trunk

The trunk can be opened with no-touch activation satisfying all the conditions below.

- After 15 seconds when all doors are closed and locked
- Positioned in the detecting area for more than 3 seconds.

✻ NOTICE

- **The Smart Trunk does not operate when:**
  - **The smart key is detected within 15 seconds after the doors are closed and locked, and is continuously detected.**
  - **The smart key is detected within 15 seconds after the doors are closed and locked, and 1.5 m (60 inches) from the front door handles. (for vehicles equipped with Welcome Light)**
  - **A door is not locked or closed.**
  - **The smart key is in the vehicle.**

1. Setting

To activate the Smart Trunk, go to User Settings Mode and select Smart Trunk on the LCD display.

❊ For more details, refer to “LCD Display” in this chapter.

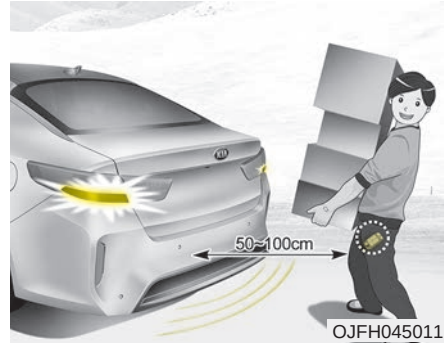

2. Detect and Alert

If you are positioned in the detecting area (50 ~100 cm (20 ~ 40 inches) behind the vehicle) carrying a smart key, the hazard warning lights will blink and the chime will sound for about 3 seconds to alert you the smart key has been detected and the trunk will open.

✻ NOTICE

Do not approach the detecting area if you do not want the trunk to open. If you have unintentionally entered the detecting area and the hazard warning lights and chime starts to operate, leave the detecting area with the smart key. The trunk will stay closed.

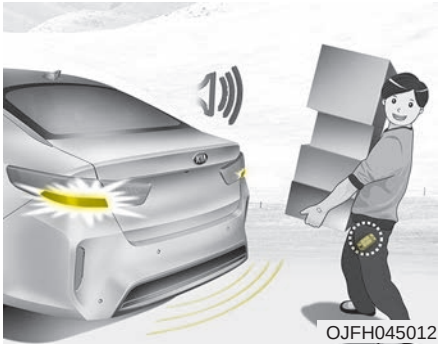
OJFH045012

3. Automatic opening

The hazard warning lights will blink and the chime will sound 2 times and then the trunk will slowly open.

Make certain that you close the trunk before driving your vehicle.

Make sure there are no people or objects around the trunk before opening or closing the trunk.

Make sure to deactivate the Smart trunk function when washing your vehicle.

Otherwise, the trunk may open inadvertently.

⚠ WARNING

Make sure objects in the rear cargo area do not come out when opening the trunk as this could cause serious injury.

✻ NOTICE

The key should be kept out of reach of children. Children may inadvertently open the Smart Trunk while playing around the rear area of the vehicle.

How to deactivate the Smart Trunk function using the smart key

OYDDCO2004

1. Door lock
2. Door unlock
3. Trunk open
4. Panic

If you press any button of the smart key during the Detect and Alert stage, the Smart Trunk function will be deactivated.

Make sure to be aware of how to deactivate the Smart Trunk function for emergency situations.

✻ NOTICE

- **If you press the door unlock button (2), the Smart Trunk function will be deactivated temporarily. But, if you do not open any door for 30 seconds, the smart trunk function will be activated again.**
- **If you press the trunk open button (3) for more than 1 second, the trunk opens.**
- **If you press the door lock button (1) or trunk open button (3) when the Smart Trunk function is not in the Detect and Alert stage, the smart trunk function will not be deactivated.**
- **In case you have deactivated the Smart Trunk function by pressing the smart key button and opened a door, the smart trunk function can be activated again by closing and locking all doors.**

Detecting area

OJFH045014

- The Smart Trunk operates with a welcome alert if the smart key is detected within 50 ~ 100 cm (20 ~ 40 inches) from the trunk.
- The alert stops at once if the smart key is positioned outside the detecting area during the Detect and Alert stage.

✻ NOTICE

- The Smart Trunk function will not work if any of the following occurs:
  - The smart key is close to a radio transmitter such as a radio station or an airport which can interfere with normal operation of the transmitter.
  - The smart key is near a mobile two way radio system or a cellular phone.
  - Another vehicle's smart key is being operated close to your vehicle.
- The detecting range may decrease or increase when :
  - One side of the vehicle is raised to replace a tire or to inspect the vehicle.
  - The vehicle is parked on a slope or unpaved road, etc.

Emergency trunk safety release

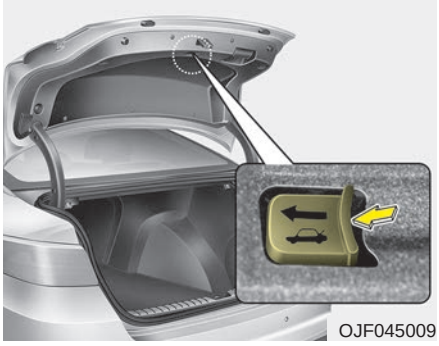
OJF045009

Your vehicle is equipped with an emergency trunk release lever located inside the trunk. If someone is inadvertently locked in the trunk, moving the handle in the direction of the arrow will release the trunk latch mechanism and open the trunk.

⚠ WARNING

- **No one should be allowed to occupy the trunk at any time. The trunk is a very dangerous location in the event of a crash.**
- **Use the release lever for emergencies only. Use extreme caution, especially while the vehicle is in motion.**

WINDOWS

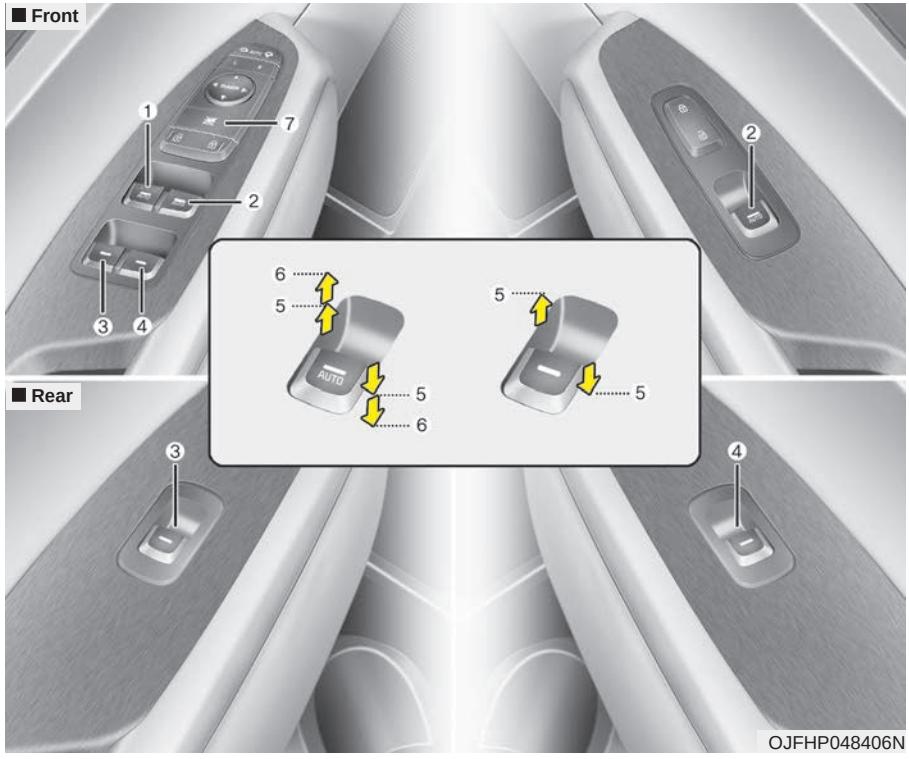

(1) Driver's door power window switch
(2) Front passenger's door power window switch
(3) Rear door (left) power window switch
(4) Rear door (right) power window switch
(5) Window opening and closing*
(6) Automatic power window up/down* (Driver's and Passenger's window)
(7) Power window lock button

* if equipped

In cold and wet climates, power windows may not work properly due to freezing conditions.

Power windows

The Engine Start/Stop button must be in the ON position for power windows to operate.

Each door has a power window switch that controls the door's window. The driver has a power window lock button which can block the operation of passenger windows. The power windows can be operated for approximately 30 seconds after the engine is turned off.

However if the front doors are opened the power windows cannot be operated even within the 30 second period.

If the window cannot be closed because it is blocked by objects, remove the objects and close the window.

✻ NOTICE

While driving with the rear windows down or with the sunroof (if equipped) in an open (or partially open) position, your vehicle may demonstrate a wind buffeting or pulsation noise. This noise is a normal occurrence and can be reduced or eliminated by taking the following actions. If the noise occurs with one or both of the rear windows down, partially lower both front windows approximately 2.5 cm (1 inch). If you experience the noise with the sunroof open, slightly reduce the size of the sunroof opening.

⚠ CAUTION

Do not install any accessories in the vehicle that extend into the open window area. Such objects will impact the proper function of the automatic reversal "jam protection" feature described in this chapter.

⚠ WARNING - Power Windows

Do not extend your face or arms outside of the window opening while the vehicle is in motion. Doing so could result in significant injury.

Window opening and closing

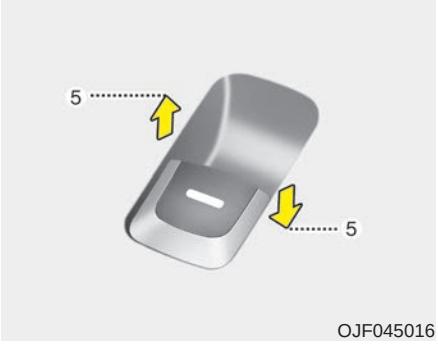

OJF045016

The driver's door has a master power window switch that controls all the windows in the vehicle.

To open or close a window, press down or pull up the front portion of the corresponding switch to the first detent position (5).

Auto up/down window (if equipped)

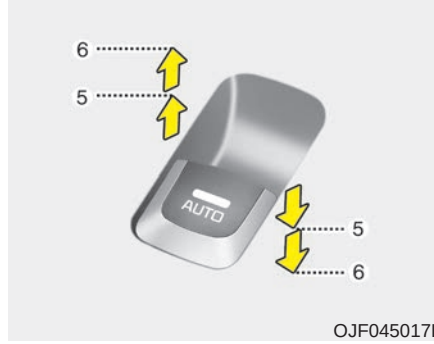

OJF045017L

Pressing or pulling up the power window switch momentarily to the second detent position (6) completely lowers or raises the window even when the switch is released. To stop the window at the desired position while the window is in operation, pull up or press down and release the switch.

If the power window does not operate normally, the automatic power window system must be reset as follows:

1. Turn to the Engine Start/Stop button ON position.
2. Close the driver's and passenger's window and continue pulling up the driver's power window switch for at least 1 second after the window is completely closed.

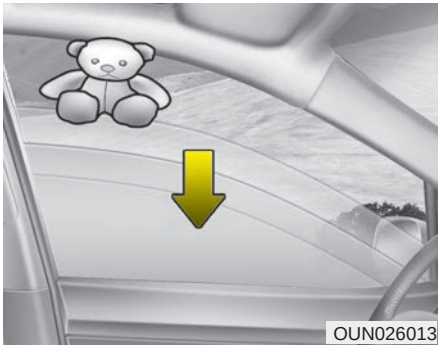

Automatic reversal (for Auto up/down window)

If the upward movement of the window is blocked by an object or part of the body, the window will detect the resistance and will stop upward movement. The window will then lower approximately 30 cm (11.8 in.) to allow the object to be cleared.

The distance may vary based on the size or position of the window. If the window detects the resistance while the power window switch is pulled up continuously, the window will stop upward movement then lower approximately 2.5 cm (1 in.).

If the power window switch is pulled up continuously again within 5 seconds after the window is lowered by the automatic window reversal feature, the automatic window reversal will not operate.

The automatic reverse feature for the driver's window is only active when the "auto up" feature is used by fully pulling up the switch. The automatic reverse feature will not operate if the window is raised using the halfway position on the power window switch.

⚠ WARNING

Always check for obstructions before raising any window to avoid injuries or vehicle damage. If an object less than 4 mm (0.16 in.) in diameter is caught between the window glass and the upper window channel, the automatic reverse window may not detect the resistance and will not stop and reverse direction.

⚠ WARNING

The automatic reverse feature doesn't activate while resetting power window system. Make sure body parts or other objects are safely out of the way before closing the windows to avoid injuries or vehicle damage.

⚠ WARNING

Do not install any accessories in the vehicle that extend into the open window area. Such objects could prevent the automatic reverse feature from functioning.

Power window lock button

OJF045018

- The driver can disable the power window switches on the passenger doors by pressing the power window lock button located on the driver's door to the LOCK position (pressed).

- **When the power window lock button is pressed :**
  - The driver's master control can operate all the power windows.
  - The front passenger's control can operate the front passenger's power window.
  - The rear passenger's control cannot operate the rear passenger's power window.

⚠ **CAUTION - Opening /closing Window**

To prevent possible damage to the power window system, do not open or close two windows or more at the same time. This will also ensure the longevity of the fuse.

Always double check to make sure all arms, hands, head and other obstructions are safely out of the way before closing a window.

⚠ **WARNING - Power windows**

Do not allow children to play with the power windows. Keep the power window lock button (on the driver's door) in the LOCK (pressed) position.

HOOD

Opening the hood

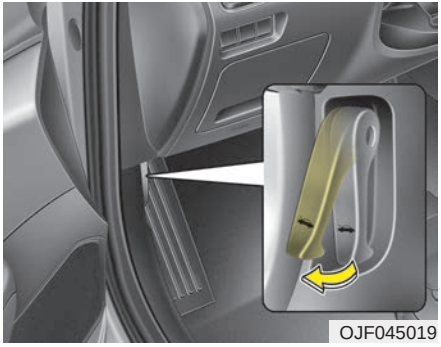
OJF045019

1. Pull the release lever to unlatch the hood. The hood should pop open slightly.

Open the hood after turning off the engine on a flat surface, shifting the shift lever to the P (Park) position and setting the parking brake.

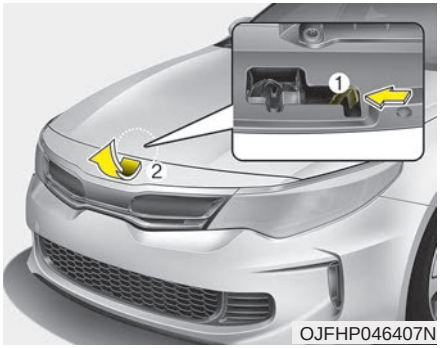

OJFHP046407N

2. Go to the front of the vehicle, raise the hood slightly, push the secondary latch (1) upward inside of the hood center and lift the hood (2).
3. Raise the hood. It will completely rise by itself after it has been raised about halfway.

Hood open warning

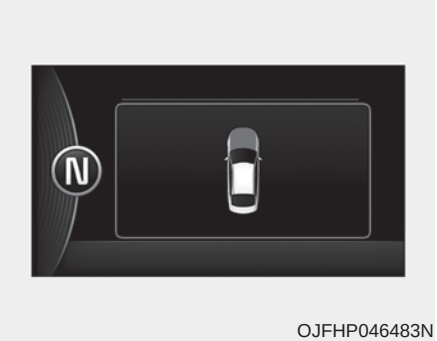
OJFHP046483N

The warning message will appear on the LCD display when hood is open.

The warning chime will operate when the vehicle is being driven at or above 3 km/h (2 mph) with the hood open.

Closing the hood

1. Before closing the hood, check the following:
   - All filler caps in the engine compartment must be correctly installed.
   - Gloves, rags or any other combustible material must be removed from the engine compartment.
2. Lower the hood until it is about 30 cm (1 ft.) above the closed position and let it drop. Make sure that it locks into place.
3. Check that the hood has engaged properly. If the hood can be raised slightly, it is not properly engaged. Open it again and close it with a little more force.

⚠ WARNING - Fire risk

Do not leave gloves, rags or any other combustible material in the engine compartment. Doing so may cause a heat-induced fire.

⚠ WARNING - Unsecured engine hood

Always double check to be sure that the hood is firmly latched before driving away. If it is not latched, the hood could fly open while the vehicle is being driven, causing a total loss of visibility, which might result in an accident.

⚠ CAUTION - Hood obstruction

Before closing the hood, ensure that all obstructions are removed from the hood opening. Closing the hood with an obstruction present in the hood opening may result in property damage.

FUEL FILLER LID (HYBRID)

Opening the fuel filler lid

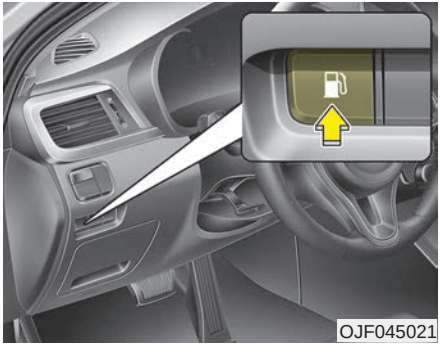

The fuel filler lid must be opened from inside the vehicle by pressing the fuel filler lid opener button.

If the fuel filler lid does not open because ice has formed around it, tap lightly or push on the lid to break the ice and release the lid. Do not pry on the lid. If necessary, spray around the lid with an approved de-icer fluid (do not use radiator anti-freeze) or move the vehicle to a warm place and allow the ice to melt.

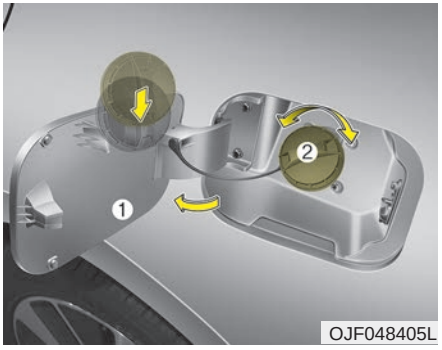

1. Stop the engine.
2. To open the fuel filler lid, push the fuel filler lid opener button.
3. Pull open the fuel filler lid (1).
4. To remove the cap, turn the fuel filler cap (2) counterclockwise (3).
5. Refuel as needed.

Closing the fuel filler lid

1. To install the cap, turn it clockwise until it “clicks” once. This indicates that the cap is securely tightened.
2. Close the fuel filler lid and push it in lightly making sure that it is securely closed.

✻ NOTICE

There may be an intermittent noise near the refueling hole while the engine is idling if the fuel cap is not closed securely. This occurs normally with the OBD system.

✻ NOTICE

When refueling on unlevel ground, the fuel gauge may not point to the F position.
It is not a malfunction. If you move your vehicle to a level ground, the fuel gauge will move to the full position.

⚠ WARNING - Refueling

Always remove the fuel cap carefully and slowly. If the cap is venting fuel or if you hear a hissing sound, wait until the condition stops before completely removing the cap. If pressurized fuel sprays out, it can cover your clothes or skin and subject you to the risk of fire and burns.

Always check that the fuel cap is installed securely to prevent fuel spillage in the event of an accident.

✻ NOTICE

Tighten the cap until it clicks once, otherwise the fuel cap open warning indicator light will illuminate.

⚠ WARNING - Fire/explosion risk

Read and follow all warnings posted at the gas station facility. Failure to follow all warnings may result in severe personal injury, severe burns or death due to fire or explosion.

⚠ WARNING - Static electricity

- **Before touching the fuel nozzle, you should eliminate potentially dangerous static electricity discharge by touching another metal part of the vehicle, a safe distance away from the fuel filler neck, nozzle, or other gas source.**
- **Do not get back into a vehicle once you have begun refueling since you can generate static electricity by touching, rubbing or sliding against any item or fabric (polyester, satin, nylon, etc.) capable of producing static electricity. Static electricity discharge can ignite fuel vapors resulting in rapid burning. If you must reenter the vehicle, you should once again eliminate potentially dangerous static electricity discharge by touching a metal part of the vehicle, away from the fuel filler neck, nozzle or other gasoline source.**

⚠ WARNING - Portable fuel container

When using an approved portable fuel container, be sure to place the container on the ground prior to refueling. Static electricity discharge from the container can ignite fuel vapors causing a fire. Once refueling has begun, contact with the vehicle should be maintained until the filling is complete. Use only approved portable plastic fuel containers designed to carry and store gasoline.

⚠ WARNING - Cell phone fires

Do not use cellular phones while refueling. Electric current and/or electronic interference from cellular phones can potentially ignite fuel vapors causing a fire.

⚠ WARNING - Smoking

DO NOT use matches or a lighter and DO NOT SMOKE or leave a lit cigarette in your vehicle while at a gas station especially during refueling. Automotive fuel is highly flammable and can, when ignited, result in fire.

⚠ WARNING - Refueling & Vehicle fires

When refueling, always shut the engine off. Sparks produced by electrical components related to the engine can ignite fuel vapors causing a fire. Once refueling is complete, check to make sure the filler cap and filler door are securely closed, before starting the engine.

Make sure to refuel your vehicle according to the “Fuel requirements” suggested in chapter 1.

If the fuel filler cap requires replacement, use only a genuine Kia cap or the equivalent specified for your vehicle. An incorrect fuel filler cap can result in a serious malfunction of the fuel system or emission control system.

⚠ CAUTION - Exterior paint

Do not spill fuel on the exterior surfaces of the vehicle. Any type of fuel spilled on painted surfaces may damage the paint.

Emergency fuel filler lid release

OJFH045023

If the fuel filler lid does not open using the remote fuel filler lid release, you can open it manually. Remove the panel in the cargo area. Pull the handle out slightly.

⚠ CAUTION

Do not pull the handle excessively, otherwise the luggage area trim or release handle may be damaged.

FUEL FILLER LID (PLUG-IN HYBRID)

Opening the fuel filler lid

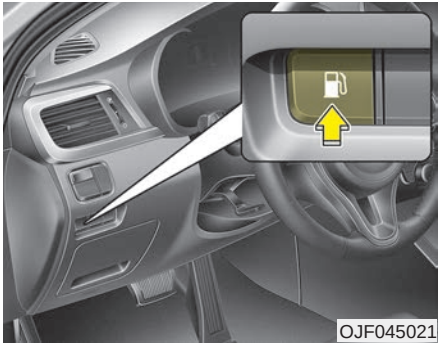

The fuel filler lid must be opened from inside the vehicle by pressing the fuel filler lid opener button.

If the fuel filler lid does not open because ice has formed around it, tap lightly or push on the lid to break the ice and release the lid. Do not pry on the lid. If necessary, spray around the lid with an approved de-icer fluid (do not use radiator anti-freeze) or move the vehicle to a warm place and allow the ice to melt.

Wait until the fuel tank is depressurized. The message is displayed when the fuel filler lid opens after the fuel tank is depressurized.

✻ NOTICE

- **It may take up to 20 seconds to open fuel filler door.**
- **When the fuel filler door is frozen and does not open after 20 seconds at freezing temperature, slightly tap the fuel filler door and then attempt to open it.**

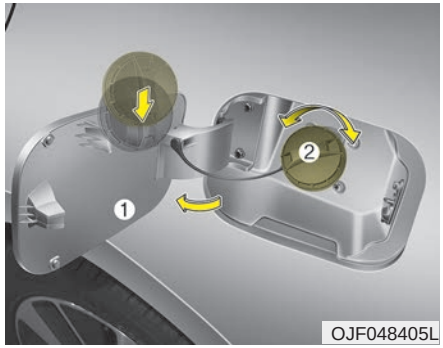

1. Stop the engine.
2. To open the fuel filler lid, push the fuel filler lid opener button.
3. Pull open the fuel filler lid (1).
4. To remove the cap, turn the fuel filler cap (2) counterclockwise(3).
5. Refuel as needed.

✻ NOTICE

- **Add fuel into the fuel tank within 20 minutes after opening the fuel filler lid. After 20 minutes, the fuel tank may shut off, causing fuel to overflow. In this case, re-press the fuel filler lid opening button.**
- **Close the fuel filler lid after fueling the vehicle. If you start the vehicle with the fuel filler lid opened, the message, "Check fuel door", illuminates on the LCD display.**

⚠ WARNING

Do not refuel the vehicle while charging the high voltage hybrid battery. Doing so may cause a fire or an explosion due to static electricity.

⚠ CAUTION

Do not leave the fuel filler door open for an extended period of time. Doing so may cause the battery to discharge.

Closing the fuel filler lid

1. To install the cap, turn it clockwise until it “clicks” once. This indicates that the cap is securely tightened.
2. Close the fuel filler lid and push it in lightly making sure that it is securely closed.

✻ NOTICE - Refueling

Do not "top off" after the nozzle automatically shuts off when refueling. If pressurized fuel sprays out, it can cover your clothes or skin and subject you to the risk of fire and burns. Always remove the fuel cap carefully and slowly. If the cap is venting fuel or if you hear a hissing sound, wait until the condition stops before completely removing the cap.

✻ NOTICE

Always check that the fuel cap is installed securely to prevent fuel spillage in the event of an accident.

Emergency fuel filler lid release

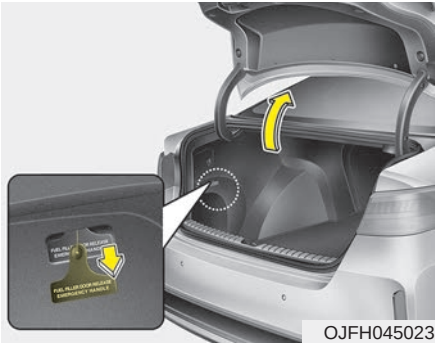

OJFH045023

If the fuel filler lid does not open using the remote fuel filler lid release, you can open it manually. Remove the panel in the cargo area. Pull the handle out slightly.

In this case, slowly open the fuel tank cap, because the fuel tank may be highly pressurized. If fuel leaks out, or if air hisses out, wait until it disappears, open the fuel tank cap, and slowly refuel the vehicle. If you quickly pour fuel into the fuel tank, the fuel may overflow out of the fuel tank.

⚠ CAUTION

Do not pull the handle excessively, otherwise the luggage compartment area trim or release handle may be damaged.

PANORAMIC SUNROOF (IF EQUIPPED)

OJF045024

If your vehicle is equipped with a sunroof, you can slide or tilt your sunroof with the sunroof control lever located on the overhead console.

The sunroof can be operated for approximately 30 seconds after turned to the Engine Start/Stop button OFF position.

However, if the front door is opened, the sunroof cannot be operated even within the 30 second period.

⚠ CAUTION - Sunroof motor damage

To prevent damage to the sunroof, periodically remove any dirt that may accumulate on the guide rail.

In cold and wet climates, the sunroof may not work properly due to freezing conditions.

After the vehicle is washed or in a rainstorm, be sure to wipe off any water that is on the sunroof before operating it.

⚠ CAUTION - Sunroof control lever

Do not continue to press the sunroof control lever after the sunroof is fully opened, closed, or tilted. Damage to the motor or system components could occur.

The sunroof cannot slide when it is in the tilt position nor can it be tilted while in an open or slide position.

⚠ WARNING - Roof cargo

Do not operate the sun roof while using the roof rack to transport cargo. This may cause the cargo to come loose and distract the driver.

⚠ WARNING

Never adjust the sunroof or sunshade while driving. This could result in loss of control and an accident that may cause death, serious injury, or property damage.

⚠ WARNING

Do not allow children to operate the sunroof. This may result in injury to the child.

⚠ CAUTION

Do not extend any luggage outside the sunroof while driving.

⚠ WARNING

- **In order to prevent accidental operation of the sunroof, especially by a child, do not let a child operate the sunroof.**
- **Do not sit on the top of the vehicle. It may cause vehicle damage.**

Sunroof open warning (if equipped)

OJF045216L

If the driver turns off the engine when the sunroof is not fully closed, the warning chime will sound for a few seconds and a message will appear on the LCD display or the warning indicator will illuminate.

Close the sunroof securely when leaving your vehicle.

⚠ CAUTION

Make sure the sunroof is fully closed when leaving your vehicle. If the sunroof is open, rain or snow may leak through the sunroof and wet the interior.

Sunshade

OJF045217L

To open the sunshade

Push the sunroof control lever backward to the 1st detent position.

To close the sunshade when the sunroof glass is closed

Push the sunroof control lever forward to the 1st detent position.

To stop the sliding at any point, press the sunshade control switch momentarily.

✻ NOTICE

Wrinkles formed on the sunshade as material characteristic are normal.

⚠ **CAUTION - Automatic sunroof shade**

- ***Do not pull or push the sunshade by hand as such action may damage the sunshade or cause it to malfunction.***
- ***Close the sunroof when driving in dusty environments. Dust may cause a malfunction of the vehicle system.***

✻ NOTICE

Only the front glass of the panorama sunroof opens and closes.

Sliding the sunroof

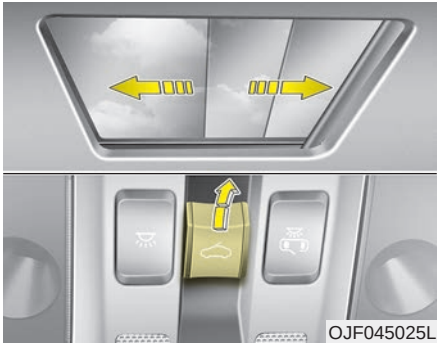

When the sunshade is closed

Push the sunroof control lever backward to the 2nd detent position, and both the sunshade and sunroof glass will slide all the way open. To stop the sunroof movement at any point, push the sunroof control glass lever momentarily.

When the sunshade is opened

Push the sunroof glass control lever backward to the 1st or 2nd detent position, the sunroof glass will be opened.

To stop the sunroof glass movement at any point, push the sunroof control lever momentarily.

Automatic reversal

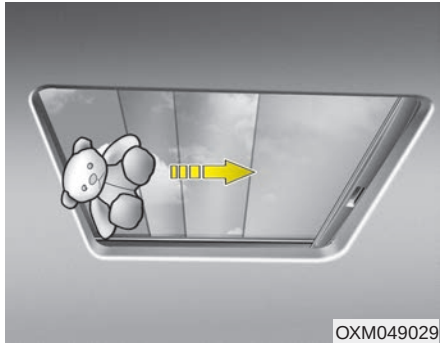

If an object or part of the body is detected while the sunroof is closing automatically, it will reverse the direction, and then stop.

The auto reverse function does not work if a tiny obstacle is between the sliding glass and the sunroof sash. You should always check that all passengers and objects are away from the sunroof before closing it.

Objects less than 4 mm (0.16 inch) in diameter caught between the sunroof glass and the front glass channel may not be detected by the automatic reverse glass and the glass will not stop and reverse direction.

⚠ WARNING - Sunroof

Do not extend the face, neck, arms or body outside the sunroof while driving.

⚠ WARNING - Sunroof Operation

When closing the sunroof, make sure there are no body parts in the movement range of the sliding roof. Parts of the body could become trapped or crushed.

⚠ CAUTION

To prevent damage to the sunroof, periodically remove any dirt that may accumulate on the guide rail.

✻ NOTICE

If you drive with the sunroof opened right after a vehicle wash or rain, water may get inside the vehicle.

⚠ CAUTION - Sunroof motor damage

If you try to open the sunroof when the temperature is below freezing or when the sunroof is covered with snow or ice, the glass or the motor could be damaged.

Tilting the sunroof

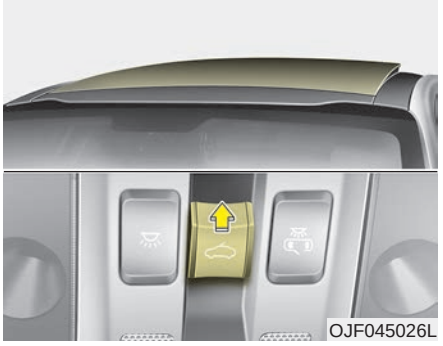

When the sunshade is closed

Push the sunroof control lever upward, the sunshade will slide halfway open then the sunroof glass will tilt.

To stop the sunroof movement at any point, pull or push the sunroof control lever momentarily.

When the sunshade is opened

Push the sunroof control lever upward, the sunroof glass will tilt.

To stop the sunroof movement at any point, pull or push the sunroof control lever momentarily.

Closing the sunroof

To close the sunroof glass with the sunshade

Push the sunroof control lever forward to the 2nd detent position. The sunroof glass and sunshade will close automatically.

To stop the sunroof movement at any point, pull or push the sunroof control lever momentarily.

To close the sunroof glass only

Push the sunroof control lever forward to the 1st detent position. The sunroof glass will close automatically.

To stop the sunroof movement at any point, push the sunroof control lever momentarily.

Resetting the sunroof

Whenever the vehicle battery is disconnected or discharged, you must reset your sunroof system as follows:

1. Start the engine.
2. Close the sunshade and sunroof completely if opened.
3. Release the sunroof control lever.
4. Push the sunroof control lever forward in the direction of close (about 10 seconds) until the sunshade slightly moves. Then, release the lever.
5. Push the sunroof control lever forward in the direction of close, until the sunroof operates as follows again:

   Sunshade Open → Glass Tilt Open → Glass Slide Open → Glass Slide Close → Sunshade Close

   Then, release the lever.

When this is complete, the sunroof system has been reset and one touch open and close should be restored.

✻ NOTICE

If the sunroof is not reset when the vehicle battery is disconnected or discharged, or related fuse is blown, the sunroof may operate improperly.

STEERING WHEEL

Electric power steering (EPS)

The power steering uses a motor to assist you in steering the vehicle. If the engine is off or if the power steering system becomes inoperative, the vehicle may still be steered, but it will require increased steering effort.

The motor driven power steering is controlled by a power steering control unit which senses the steering wheel torque and vehicle speed to command the motor.

The steering becomes heavier as the vehicle's speed increases and becomes lighter as the vehicle's speed decreases for improved steering control.

Should you notice any change in the effort required to steer during normal vehicle operation, have the power steering checked by an authorized Kia dealer.

- If the Electric Power Steering System does not operate normally, the warning light will illuminate on the instrument cluster. The steering wheel may require increased steering effort. Take your vehicle to an authorized Kia dealer and have the vehicle checked as soon as possible.
- When you operate the steering wheel in low temperature, noise may occur. If temperature rises, the noise will likely disappear. This is a normal condition.
- When the vehicle is stationary, and the steering wheel is turned all the way to the left or right continuously, the steering wheel becomes harder to turn. The power assist is limited to protect the motor from overheating.

  As time passes, the steering wheel will return to its normal condition.

✻ NOTICE

The following symptoms may occur during normal vehicle operation:

- **The EPS warning light does not illuminate.**
- **The steering gets heavy immediately after turning the Engine Start/Stop button is ON position. This happens as the system performs the EPS system diagnostics. When the diagnostics are completed, the steering wheel will return to its normal condition.**
- **A click noise may be heard from the EPS relay after turning the Engine Start/Stop button is ON or OFF position.**
- **A motor noise may be heard when the vehicle is at a stop or at a low driving speed.**
- **If the Electric Power Steering System does not operate normally, the warning light will illuminate on the instrument cluster. The steering wheel may become difficult to control or operate abnormally. Take your vehicle to an authorized Kia dealer and have the vehicle checked as soon as possible.**

(Continued)

(Continued)

- **When the charging system warning light comes on due to low voltage (when the alternator or battery do not operate normally or malfunctions), the steering wheel may require increased steering effort.**

Tilt and telescopic steering

Tilt and telescopic steering allows you to adjust the steering wheel before you drive. You can also raise it to give your legs more room when you exit and enter the vehicle.

The steering wheel should be positioned so that it is comfortable for you to drive, while permitting you to see the instrument panel warning lights and gauges.

⚠ WARNING - Steering wheel adjustment

Never adjust the angle and height of the steering wheel while driving. You may lose steering control.

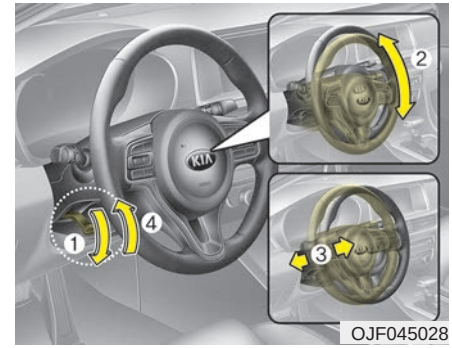

To change the steering wheel angle, pull down the lock-release lever (1), adjust the steering wheel to the desired angle (2) and height (3, if equipped) then pull up the lock-release lever to lock (4) the steering wheel in place. Be sure to adjust the steering wheel to the desired position before driving.

✻ NOTICE

After adjustment, sometimes the lock release lever may not lock the steering wheel. It is not a malfunction. This occurs when two gears are not engaged correctly. In this case, adjust the steering wheel again and then lock the steering wheel.

Heated steering wheel

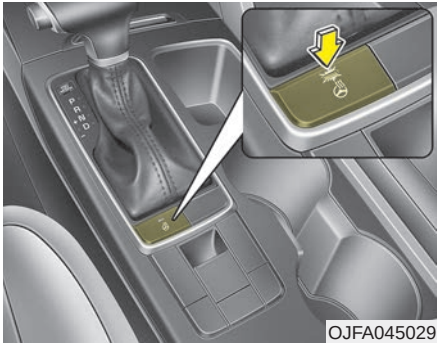

OJFA045029

With the Engine Start/Stop button is ON position, pressing the heated steering wheel button warms the steering wheel. The indicator on the button will illuminate.

To turn the heated steering wheel off, press the button once again. The indicator on the button will turn off.

⚠ WARNING

If the steering wheel becomes too warm, turn the system off. The heated steering wheel may cause burns even at low temperatures, especially if used for long periods of time.

✻ NOTICE

The heated steering wheel will turn off automatically approximately 30 minutes after the heated steering wheel is turned on.

⚠ CAUTION

- ***Do not install any type of grip cover for the steering wheel, it may impair the function of the heated steering wheel system.***
- ***When cleaning the heated steering wheel, do not use an organic solvent such as paint thinner, benzene, alcohol and gasoline. Doing so may damage the surface of the steering wheel.***
- ***If the surface of steering wheel is damaged by sharp object, damage to the heated steering wheel components could occur.***

Horn

OJF045030

To sound the horn, press the horn symbols on your steering wheel. Check the horn regularly to be sure it operates properly.

✻ NOTICE

To sound the horn, press the area indicated by the horn symbol on your steering wheel (see illustration). The horn will operate only when this area is pressed.

MIRRORS

Inside rearview mirror

Adjust the rearview mirror so that the center view through the rear window is seen. Make this adjustment before you start driving.

Do not place objects in the rear seat or cargo area which would interfere with your vision through the rear window.

⚠ WARNING - Mirror adjustment

Do not adjust the rearview mirror while the vehicle is moving. This could result in loss of control.

⚠ WARNING

Do not modify the inside mirror and don't install a wide mirror. It could result in injury during an accident or deployment of the air bag.

Electric chromatic mirror (ECM)

The electric rearview mirror automatically controls the glare from the headlights of the vehicles behind you in nighttime or low light driving conditions. The sensor mounted in the mirror senses the light level around the vehicle and automatically controls the headlight glare from the vehicles behind you.

When the engine is running, the glare is automatically controlled by the sensor mounted in the rearview mirror.

Whenever the shift lever is shifted into reverse (R), the mirror will automatically go to the brightest setting in order to improve the driver's view behind the vehicle.

⚠ CAUTION - Cleaning mirror

When cleaning the mirror, use a paper towel or similar material dampened with glass cleaner. Do not spray glass cleaner directly on the mirror. It may cause the liquid cleaner to enter the mirror housing.

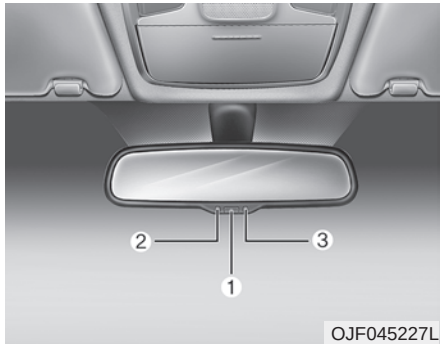

To operate the electric rearview mirror:

- The mirror defaults to the ON position whenever the ignition switch is turned on.
- Press the ON/OFF button (1) to turn the automatic dimming function off. The mirror indicator light (2) will turn off.

  Press the ON/OFF button (1) to turn the automatic dimming function on. The mirror indicator light (2) will illuminate.

❊(2) : Indicator, (3) : Sensor

Outside rearview mirror

Be sure to adjust the mirror angles before driving.

Your vehicle is equipped with both left-hand and right-hand outside rearview mirrors. The mirrors can be adjusted remotely with the remote switch. The mirror heads can be folded back to prevent damage during an automatic vehicle wash or when passing through a narrow street.

The right outside rearview mirror is convex. Objects seen in the mirror are closer than they appear.

Use your interior rearview mirror or direct observation to determine the actual distance of following vehicles when changing lanes.

⚠ **CAUTION - Rearview mirror**

Do not scrape ice off the mirror face; this may damage the surface of the glass. If ice should restrict the movement of the mirror, do not force the mirror for adjustment. To remove ice, use a deicer spray, a sponge or soft cloth with very warm water.

If the mirror is jammed with ice, do not adjust the mirror by force. Use an approved spray de-icer (not radiator antifreeze) to release the frozen mechanism or move the vehicle to a warm place and allow the ice to melt.

⚠ WARNING - Mirror adjustment

Do not adjust or fold the outside rearview mirrors while the vehicle is moving. This could result in loss of control.

Adjusting outside rearview mirror

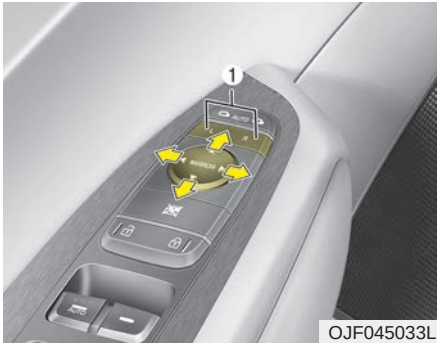

OJF045033L

The electric remote control mirror switch allows you to adjust the position of the left and right outside rearview mirrors. To adjust the position of either mirror, press the R or L button (1) to select the right side mirror or the left side mirror, then press a corresponding point (▲) on the mirror adjustment control to position the selected mirror up, down, left or right.

After adjustment, press the R or L button again to prevent the inadvertent adjustment.

⚠ CAUTION - Outside mirror

- ***The mirrors stop moving when they reach the maximum adjusting angles, but the motor continues to operate while the switch is pressed.***

  Do not press the switch longer than necessary, the motor may be damaged.
- ***Do not attempt to adjust the outside rearview mirror by hand. Doing so may damage the parts.***

Reverse parking aid function (if equipped)

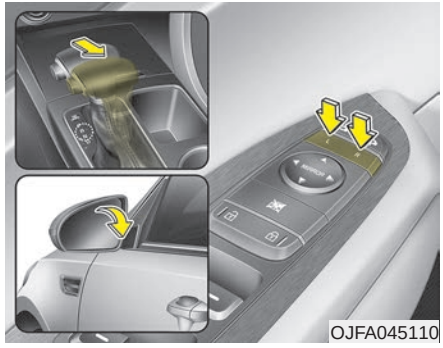

While the vehicle is moving in reverse, the outside rearview mirror(s) will move downward to aid reverse parking. According to the position of the outside rearview mirror switch (1), the outside rearview mirror(s) will operate as follows:

L/R : When the remote control outside rearview mirror switch (1) is selected to the L (left) or R (right) position, both outside rearview mirrors will move downward.

Neutral : When the remote control outside rearview mirror switch is placed in the middle, the outside rearview mirrors will not operate while the vehicle is moving rearward.

The outside rearview mirrors will automatically revert to their original positions under the following conditions :

1. The Engine Start/Stop button is in the OFF position.
2. Shift lever is moved to any position except R (Reverse).
3. Remote control outside rearview mirror switch is placed in the middle.

Folding the outside rearview mirror

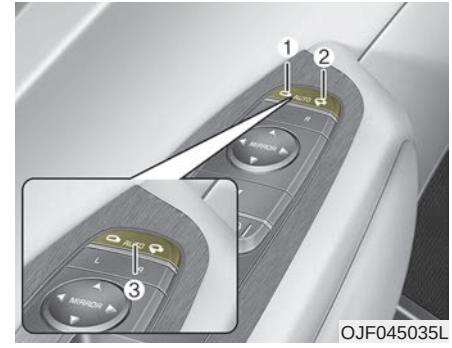

Electric type

The outside rearview mirror can be folded or unfolded by pressing the switch when the Engine Start/Stop button is in the ON position as below.

Left (1) : The mirror will unfold.

Right (2) : The mirror will fold.

Center (AUTO, 3) :

The mirror will fold or unfold automatically as follows:

- The mirror will fold or unfold when the door is locked or unlocked by the folding key or smart key.
- The mirror will fold or unfold when the door is locked or unlocked by the button on the outside door handle.
- The mirror will unfold when you approach the vehicle (all doors closed and locked) with a smart key in possession.

⚠ **CAUTION - Electric type outside rearview mirror**

The electric type outside rearview mirror operates even though the engine start/stop button is in the OFF position. However, to prevent unnecessary battery discharge, do not adjust the mirrors longer than necessary while the engine is not running.

Do not fold by hand electric type outside rearview mirrors; motor failure could occur.

INSTRUMENT CLUSTER

■ **For Hybrid**

1. Hybrid system gauge
2. Fuel gauge
3. Speedometer
4. Warning and indicator lights
5. LCD display (including Trip computer)
6. Battery SOC (State of Charge) gauge

■ **For Plug in Hybrid**

❊ The actual cluster in the vehicle may differ from the illustration.
For more details, refer to the “Gauges” in this chapter.

OJFH046101C/OJFHP046101C

Instrument Cluster Control

Adjusting Instrument Cluster Illumination

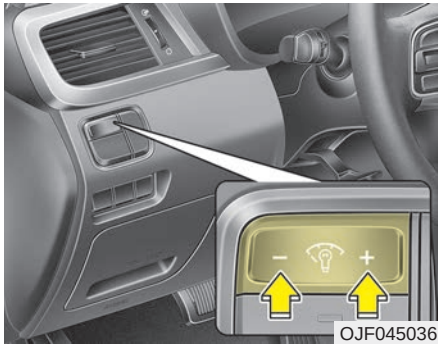

OJF045036

The brightness of the instrument panel illumination is changed by pressing the illumination control button ("+" or "-") when Engine Start/Stop button is ON, or the tail-lights are turned on.

OJFH046132N

- If you hold the illumination control button ("+" or "-"), the brightness will be changed continuously.
- If the brightness reaches to the maximum or minimum level, an alarm will sound.

LCD Display Control

■ Type A

OJF045037L

■ Type B

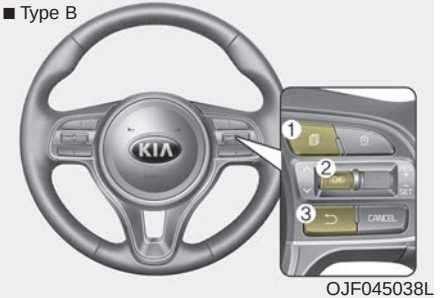

OJF045038L

The LCD display modes can be changed by using the control buttons on the steering wheel.

[Type A]

(1) : MODE button for changing modes

(2) ∧/∨/OK : SELECT scroll switch for setting the selected item and RESET scroll switch for resetting items

[Type B]

(1) : MODE button for changing modes

(2) ∧/∨/OK : SELECT scroll switch for setting the selected item and RESET scroll switch for resetting items

(3) : RETURN button for moving the previous mode or item (if equipped)

❊ For the LCD modes, refer to “LCD Display” in this chapter.

Gauges

Speedometer

OJFA045102C

The speedometer indicates the speed of the vehicle and is calibrated in kilometers per hour (km/h) and/or miles per hour (mph).

Engine coolant temperature gauge

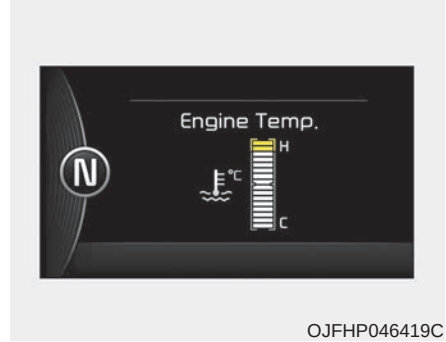

OJFHP046419C

This gauge shows the temperature of the engine coolant when the Engine Start/Stop button is in the ON position.

Do not continue driving with an overheated engine. If your vehicle overheats, refer to “If the engine overheats” in chapter 7.

If the gauge pointer moves beyond the normal range area toward the “Red (H)” position, it indicates overheating that may damage the engine.

⚠ WARNING - Hot radiator

Never remove the radiator cap when the engine is hot. The engine coolant is under pressure and could cause severe burns. Wait until the engine is cool before adding coolant to the reservoir.

Hybrid System Gauge

OJFH045374

The hybrid system gauge indicates whether the current driving condition is fuel efficient or not.

- CHARGE : Shows that the energy made by the vehicle is being converted to electrical energy. (Regenerated energy)
- ECO : Shows that the vehicle is being driven in an Eco-friendly manner.
- POWER : Shows that the vehicle is exceeding the Eco-friendly range.

✻ NOTICE

Based on the hybrid system gauge, the "EV" indicator comes on or off.

- **"EV" indicator ON : Vehicle is using the electric motor or the gasoline engine is stopped.**
- **"EV" indicator OFF : Vehicle is using the gasoline engine.**

Hybrid Battery SOC (State of Charge) Gauge

■ for Hybrid

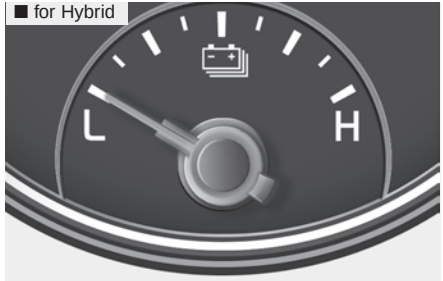

OJFH045375

■ for Plug-in Hybrid

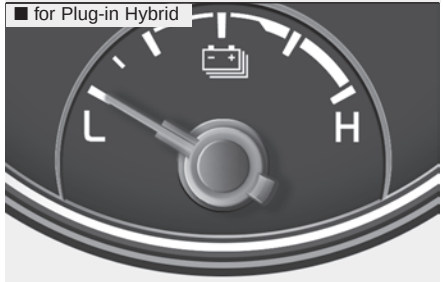

OJFHP046487N

This gauge indicates the remaining hybrid battery power. If the SOC is near the “L (Low)” level, the vehicle automatically operates the engine to charge the battery.

However, if the Service Indicator ( ) and Malfunction Indicator Lamp (MIL) ( ) turns on when the SOC gauge is near the “L (Low)” level, have your vehicle inspected by an authorized Kia dealer.

✻ NOTICE

Never try to start the vehicle if the fuel tank is empty. In this condition, the engine cannot charge the high voltage battery of the hybrid system. If you try to start the vehicle when the fuel is empty, the high voltage battery will become discharged and be damaged.

Plug-in hybrid mode indicator

• CD (Charge Depleting, Electric) mode

OJFHP048420N

: The high-voltage (hybrid) battery is used to drive the vehicle.

• CS (Charge Sustaining, Hybrid) mode

OJFHP048421N

: The high-voltage (hybrid) battery and gasoline engine is used to drive the vehicle.

• HEV-charging mode

OJFHP048422N

: Gasoline engine is used to drive the vehicle and charge the high-voltage (hybrid) battery

A corresponding message is displayed to indicate the selected mode.

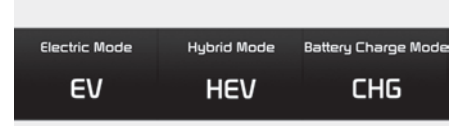

OJFHP046425L/OJFHP046426L/OJFHP046427L

Fuel Gauge

This gauge indicates the approximate amount of fuel remaining in the fuel tank.

✻ NOTICE

- **The fuel tank capacity is given in chapter 9.**
- **The fuel gauge is supplemented by a low fuel warning light which will illuminate when the fuel tank is nearly empty.**
- **On inclines or curves, the fuel gauge pointer may fluctuate or the low fuel warning light may come on earlier than usual due to the movement of fuel in the tank.**

✻ NOTICE - Fuel gauge

Running out of fuel can expose vehicle occupants to danger. You must obtain additional fuel as soon as possible after the warning light comes on or when the gauge indicator comes close to the "E (Empty)" level.

⚠ CAUTION - Low fuel

Avoid driving with an extremely low fuel level. Running out of fuel could cause the engine to misfire damaging the catalytic converter.

✻ NOTICE

Fuel display may not be accurate if the vehicle is on an incline.

Odometer

OJF045133

The odometer Indicates the total distance that the vehicle has been driven and should be used to determine when periodic maintenance should be performed.

- Odometer range : 1,599,999 kilometers or 0 ~ 999,999 miles.

Outside Temperature Gauge

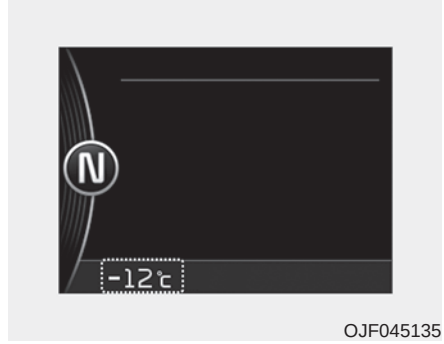

OJF045135

This gauge indicates the current outside air temperatures by 1°C (1°F).

- Temperature range : -40 ~ 60°C (-40 ~ 140°F)

The outside temperature on the display may not change immediately like a general thermometer to prevent the driver from being distracted.

The temperature unit (from C to F or from F to C) can be changed by using the "User Settings" mode of the LCD display.

❈ For more details, refer to “LCD Display” in this chapter.

Transaxle Shift Indicator

Automatic Transaxle Shift Indicator

OJF045138

This indicator displays which automatic transaxle shift lever is selected.

- Park : P
- Reverse : R
- Neutral : N
- Drive : D
- Sports Mode : 1, 2, 3, 4, 5, 6

LCD DISPLAY

LCD Modes

Modes	Symbol	Explanation
Trip Computer		This mode displays driving information like the tripmeter, fuel economy, and so on. ❊ For more details, refer to “Trip Computer” in this chapter.
Turn By Turn (if equipped)		This mode displays the state of the navigation.
Assist Mode (if equipped)		This mode displays the state of the Smart Cruise Control with Stop & Go system and Lane Departure Warning (LDW) system. ❊ For more details, refer to “Smart Cruise Control with Stop & Go system” or “Lane Departure Warning (LDW) system” in chapter 6.
A/V (if equipped)		This mode displays the state of the A/V system.
Service		This mode informs of service interval (mileage or days) and pressure status of each tire.
		This mode informs of warning messages related to low tire pressure, malfunction of Blind-spot Collision Warning (BCW) or any other service issues that require attention.
		When any door is not closed securely, this symbol is illuminated.
User Settings		On this mode, you can change settings of the doors, lamps, etc.

❊ For controlling the LCD modes, refer to “LCD Display Control” in this chapter.

Service Mode

Tire Pressure (if equipped)

OJFHP047487L

This mode displays the pressure status of each tire.

You can change the tire pressure unit in “User settings” mode.

❊ For more information, refer to “Tire Pressure Monitoring System (TPMS)” in chapter 7.

Service Interval

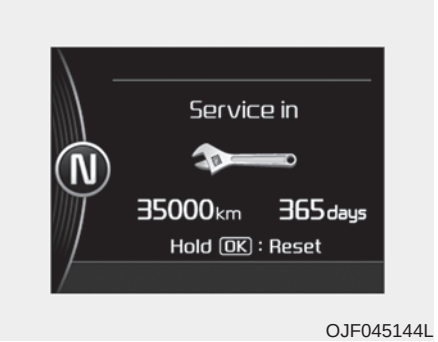

OJF045144L

Service interval

It calculates and displays when you need a scheduled maintenance service (mileage or days).

If the remaining mileage or time reaches 1,500 km (900 mi.) or 30 days, a service interval message will be displayed for several seconds each time you set the Engine Start/Stop Button to the ON position.

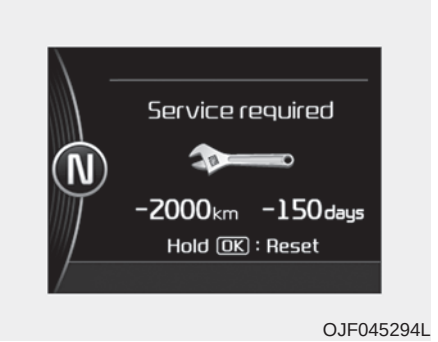

OJF045294L

Service required

If you do not have your vehicle serviced according to the already inputted service interval, the “Service required” message will appear.

The “Service required” message is displayed for several seconds each time you set the Engine Start/Stop Button to the ON position.

To reset the service interval to the mileage and days you inputted before:

Press the OK button (reset) for more than 1 second.

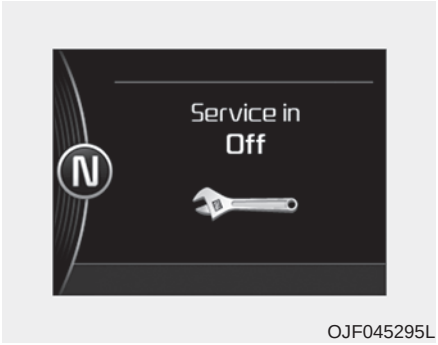

OJF045295L

Service in OFF

If the service interval is not set "Service in OFF" message is displayed on the LCD display.

If you want to activate Service interval function, set the service interval in the User setting mode.

❊ For more details, refer to “User setting mode” in this chapter.

✻ NOTICE

If any of the following conditions occur, the mileage and days may be incorrect.
- The battery cable is disconnected.
- The fuse switch is turned off.
- The battery is discharged.

Master Warning Mode

- This warning light informs the driver of the following situations
  - LED head lamp malfunction (if equipped)
  - Smart Cruise Control with Stop & Go malfunction (if equipped)
  - Forward Collision-Avoidance Assist malfunction (if equipped)
  - Blind-Spot Collision Warning (BCW) malfunction (if equipped)
  - Lamp malfunction
  - High Beam Assist malfunction (if equipped)
  - Tire Pressure Monitoring System (TPMS) malfunction (if equipped)

The Master Warning Light illuminates if one or more of the above warning situations occur.

If the warning situation is resolved, the master warning light turns off.

User Settings Mode

Description

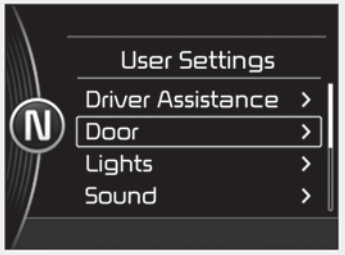

OJFHP048625N

In this mode, you can change setting of the doors, lights, etc.

⚠ WARNING

Do not adjust the User Setting while driving. You may lose your steering control and cause severe personal injury or accidents.

Shift to P to edit settings

This warning message appears if you try to adjust the User Settings while driving.

For your safety, change the User Settings after parking the vehicle, applying the parking brake and moving the shift lever to P (Park).

Driver Assistance (if equipped)

- SCC Reaction (if equipped) :
  - Choose the sensitivity (fast, normal, slow) of the Smart Cruise Control.

❊For more details, refer to “Smart Cruise Control with Stop & Go” in chapter 6.

- Forward Collision-avoidance Assist (FCA) (if equipped) :
  - To activate or deactivate the FCA system.

❊For more details, refer to “Forward Collision-avoidance Assist (FCA)” in chapter 6.

- Forward Collision Warning (FCW) (if equipped) :
  - Choose the inital warning alert time of the forward collision warning. (Late/Normal/Early)

❊For more details, refer to “Forward Collision-avoidance Assist (FCA)” in chapter 6.

- Rear Cross-Traffic Collision Warning (if equipped) :
  - If this item is checked, the rear cross-traffic collision Warning function will be activated.

❊For more details, refer to “Blind-spot Collision Warning” in chapter 6.

- Coasting guide (if equipped):
  - Coasting guide : To activate or deactivate the Coasting guide.
  - Sound : To activate of deactivate the Coasting guide sound.
- Start Coasting (if equipped) :
  - To adjust the sensitivity (Late/Normal/Early) of the Coasting Guide.

Door

- Auto Lock :
  - Enable on Speed : All doors will be automatically locked when the vehicle speed exceeds 15 km/h (9.3 mph).
  - Enable on Shift : All doors will be automatically locked if the transaxle shift lever is shifted from the P (Park) position to the R (Reverse), N (Neutral), or D (Drive) position.
- Auto Unlock :
  - Disable : The auto door unlock operation will be canceled.
  - Vehicle Off : All doors will be automatically unlocked when the Engine Star/Stop button is set to the OFF position.
  - On Shift to P : All doors will be automatically unlocked if the automatic transaxle shift lever is shifted to the P (Park) position.
- Two Press Unlock :
  - If this item is checked, the two press unlock function will be activated.
- Horn Feedback (if equipped) :
  - If this item is checked, the horn feedback function will be activated.
- Smart Trunk (if equipped) :
  - If this item is checked, the smart trunk function will be activated.

❊For more details, refer to “Smart Trunk” in this chapter.

Lights

- One Touch Turn Signal :
  - Off: The one touch turn signal function will be deactivated.
  - 3, 5, 7 Flashes : The lane change signals will blink 3, 5 or 7 times when the turn signal lever is moved slightly.

❊For more details, refer to “Lighting” in this chapter.

- Headlight Delay :
  - If this item is checked, the head lamp delay function will be activated.

❊For more details, refer to “Lighting” in this chapter.

- Welcome Light(if equipped) :
  - If this item is checked, the welcome light function will be activated.

Sound

- Cluster Voice Guidance Volume (if equipped) :
  - Adjust the Cluster voice guidance volume. (Level 1~3)
- Parking Distance Warning Volume (if equipped) :
  - Adjust the Park Assist System volume. (Level 1 ~ 3)
- Blind-Spot Collision Warning Sound (if equipped) :
  - If this item is checked, the blind spot detection sound will be activated.

❊For more details, refer to "Blind-Spot Collision Warning System" in chapter 6.

Convenience

- Seat Easy Access (if equipped) :
  - Off : The seat easy access function will be deactivated.
  - Normal/Extended : When you turn off the engine, the driver’s seat will automatically move backwards 7.6 cm (3 in.) (Enhanced) for you to enter or exit the vehicle more comfortably.

  If you change the ignition switch or Engine Start/Stop Button from OFF position to the ACC position, the driver’s seat will return to the original position.

❊For more details, refer to “Driver Position Memory System” in chapter 3.

- Steering Position :
  - If this item is checked, the warning function regarding the steering wheel alignment will be activated.

❊For more details, refer to “Warning Messages” in this chapter.

- Wireless Charging System (if equipped) :
  - If this item is checked, the wireless charging system will be activated.
- Wiper/Light Display (if equipped) :
  - If this item is checked, the LCD display shows a selected wiper/light mode whenever you changed its mode.

Service Interval

On this mode, you can activate the service interval function with mileage (km or mi.) and period (months).

- Off : The service interval function will be deactivated.
- On : You can set the service interval (mileage and months).

❊For more details, refer to “Service Mode” in this chapter.

Other

- Fuel Economy Reset :
  - If this item checked, the average fuel economy will reset automatically after refueling or after ignition.
- Fuel Economy Unit :
  - Choose the fuel economy unit. (US gallon, UK gallon, L/100 km)
- Temperature Unit :
  - Choose the temperature unit. (°C,°F)
- Tire Pressure Unit (if equipped) :
  - Choose the tire pressure unit. (psi, kPa, bar)

Language (if equipped)

Choose the language.

Reset

You can reset the menus in the User Settings Mode. All menus in the User Settings Mode are initialized, except language and service interval.

TRIP MODES (TRIP COMPUTER)

The trip computer is a microcomputer-controlled driver information system that displays information related to driving.

✻ NOTICE

Some driving information stored in the trip computer (for example Average Vehicle Speed) resets if the battery is disconnected.

Trip Modes

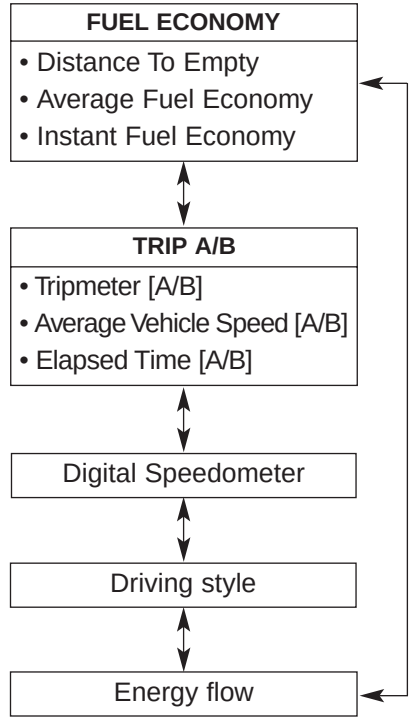

To change the trip mode, scroll the TRIP scroll switch (∧/∨) in the trip computer mode.

Fuel Economy

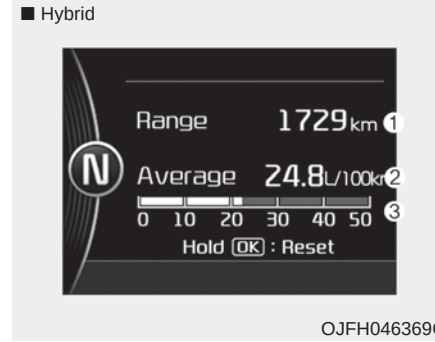

Distance to empty (1, hybrid)

- The range is the estimated distance the vehicle can be driven with the remaining fuel.
  - Distance range : 1 ~ 9,999 km or 1 ~ 9,999 mi.
- If the estimated distance is below 1km (1mi.), the trip computer will display "---" as range.
- If the vehicle is not on level ground or the battery power has been interrupted, the range function may not operate correctly.

- The range may differ from the actual driving distance as it is an estimate of the available driving distance.
- The trip computer may not register additional fuel if less than 6 liters (1.6 gallons) of fuel are added to the vehicle.

✻ NOTICE

The fuel economy and range may vary significantly based on driving conditions, driving habits, and condition of the vehicle.

■ Plug-in hybrid

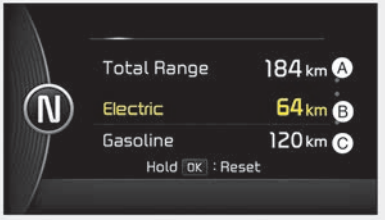

OJFHP046482C

Distance to empty (Plug-in hybrid)

- Total range (A)

  Electric distance to empty(B) + Gasoline distance to empty(C)
- Electric range (B)

  The distance to empty is the estimated distance the vehicle can be driven with the remaining high voltage battery.
- Gasoline range (C)

  The distance to empty is the estimated distance the vehicle can be driven with the remaining fuel.

- If the estimated distance is below 1 km (1 mi.), the trip computer will display “---” as distance to empty.

  - Distance range: 1 ~ 9,999 km or 1 ~ 9,999 mi.

Average Fuel Economy (2)

- The average fuel economy is calculated by the total driving distance and fuel consumption since the last average fuel economy reset.
  - Fuel economy range : 1 ~ 99.9 L/100km or MPG (for Hybrid)/0 ~ 99.9, 100 ~ 999 L/100km or MPG (for Plug-in Hybrid)
- The average fuel economy can be reset both manually and automatically.

Manual reset

To reset average fuel economy manually, press the OK button (reset) on the steering wheel for more than 1 second when the average fuel economy is displayed.

Automatic reset

To make the average fuel economy reset automatically whenever refueling, select the “Auto Reset” mode in User Setting menu of the LCD display (Refer to “LCD Display”).

- OFF - You may set to default manually by using the trip switch reset button.
- When driving - The vehicle will automatically set to default once 4 hours pass after the the engine is OFF.
- When refueling - After refueling more than 6 liters (1.6 gallons) and driving over 1 km/h (1 mph), the vehicle will reset to default automatically.

✻ NOTICE

For a more accurate calculation of the average fuel economy, the vehicle must be continuously driven more than 10 seconds and 50 meters (0.03 miles).

Instant Fuel Economy (3)

- This mode displays the instant fuel economy during the last few seconds when the vehicle speed is more than 10 km/h (6.2 MPH).
  - Fuel economy range: 0 ~ 30 L/100km or 0 ~ 50 MPG

⚠ CAUTION - Low Fuel Level

Level warning light on or with the fuel level below "E" can cause the engine to misfire and damage the catalytic converter (if equipped).

Trip A/B

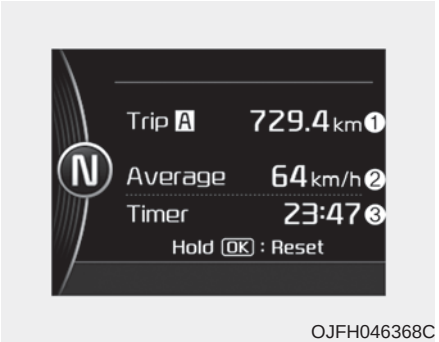

OJFH046368C

Tripmeter (1)

- The tripmeter is the total driving distance since the last tripmeter reset.
  - Distance range: 0.0 ~ 9999.9 km or mi.

To reset the tripmeter, press the OK button (reset) on the steering wheel for more than 1 second when the tripmeter is displayed.

Average Vehicle Speed (2)

- The average vehicle speed is calculated by the total driving distance and driving time since the last average vehicle speed reset.
  - Speed range : 0~260 km/h or 0~160 MPH

To reset the average vehicle speed, press the OK button (reset) on the steering wheel for more than 1 second when the average vehicle speed is displayed.

✻ NOTICE

- **The average vehicle speed is not displayed, when the vehicle drives shorter than 50 meters (0.03 miles) or less than 10 seconds after turning ON the Engine Start/Stop button.**
- **Even if the vehicle is not in motion, the average vehicle speed keeps going while the engine is running.**

Elapsed Time (3)

- The elapsed time is the total driving time since the last elapsed time reset.
  - Time range (hh:mm): 00:00 ~ 99:59

To reset elapsed time, press the OK button (reset) on the steering wheel for more than 1 second when the elapsed time is displayed.

✻ NOTICE

Even if the vehicle is not in motion, the elapsed time keeps going while the engine is running.

Digital speedometer

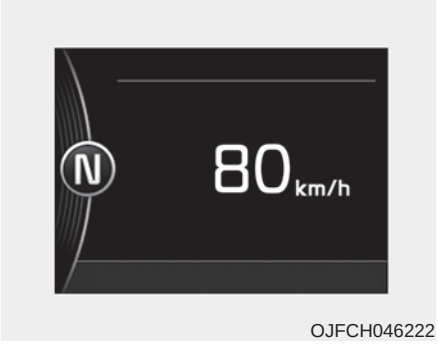

OJFCH046222

This mode displays the current speed of the vehicle.

One time driving information mode

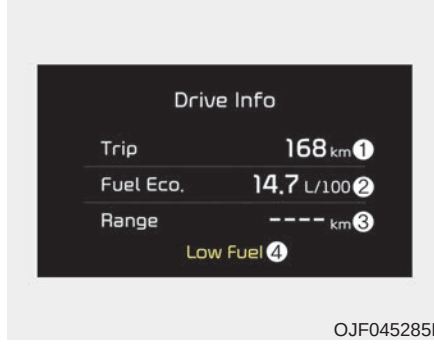

OJF045285L

This display shows trip distance (1), average fuel economy (2) and the approximate distance the vehicle can be driven with the remaining fuel (3).

This information is displayed for a few seconds when you turn off the engine and then goes off automatically. The information provided is calculated according to each trip.

If the estimated distance is below 1km (1mi.), the range (3) will display as “---”.

When low fuel warning light ( ) illuminates in the cluster, the refuel message will appear(4).

Turn By Turn Mode (if equipped)

OJF045223L

This mode displays the state of the navigation.

Assist Mode (if equipped)

OJFHP048627N

This mode displays the state of the Smart Cruise Control with Stop & Go (SCC) and Lane Departure Warning (LDW) system.

❊ For more information, refer to "Smart Cruise Control with Stop & Go (SCC)" and "Lane Departure Warning (LDW) system" in chapter 6.

A/V Mode (if equipped)

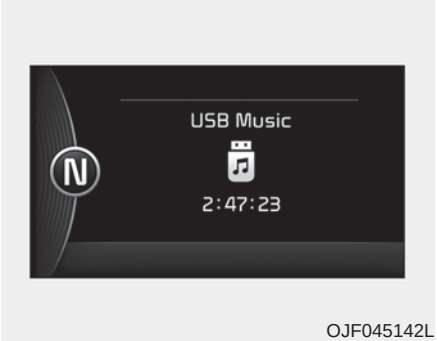

OJF045142L

This mode displays the state of the A/V system.

Warning Messages

Shift to P

- This warning message illuminates if you try to turn off the engine without the shift lever in P (Park) position.
- At this time, the Engine Start/Stop Button turns to the ACC position (If you press the Engine Start/Stop Button once more, it will turn to the ON position).

Low Key Battery

- This warning message illuminates if the battery of the smart key is discharged when the Engine Start/Stop Button changes to the OFF position.

Press start button while turning wheel

- This warning message illuminates if the steering wheel does not unlock normally when the Engine Start/Stop Button is pressed.
- It means that you should press the Engine Start/Stop Button while turning the steering wheel right and left.

Steering wheel not locked

- This warning message illuminates if the steering wheel does not lock when the Engine Start/Stop Button changes to the OFF position.

Check steering wheel lock system

- This warning message illuminates if the steering wheel does not lock normally when the Engine Start/Stop Button changes to the OFF position.

Press brake pedal to start engine

- This warning message illuminates if the Engine Start/Stop Button changes to the ACC position twice by pressing the button repeatedly without depressing the brake pedal.
- It means that you should depress the brake pedal to start the engine.

Key not in vehicle

- This warning message illuminates if the smart key is not in the vehicle when you press the Engine Start/Stop Button.
- It means that you should always have the smart key with you.

Key not detected

- This warning message illuminates if the smart key is not detected when you press the Engine Start/Stop Button.

Press start button again

- This warning message illuminates if you cannot operate the Engine Start/Stop Button when there is a problem with the Engine Start/Stop Button system.
- It means that you could start the engine by pressing the Engine Start/ Stop Button once more.
- If the warning illuminates each time you press the Engine Start/Stop Button, have your vehicle inspected by an authorized Kia dealer.

Press start button with key

- This warning message illuminates if you press the Engine Start/Stop Button while the warning message “Key not detected” is illuminating.
- At this time, the immobilizer indicator light blinks.

Check BRAKE SWITCH fuse

- This warning message illuminates if the brake switch fuse is disconnected.
- It means that you should replace the fuse with a new one. If that is not possible, you can start the engine by pressing the Engine Start/Stop Button for 10 seconds in the ACC position.

Shift to P or N to start engine

- This warning message illuminates if you try to start the engine with the shift lever not in the P (Park) or N (Neutral) position.

✻ NOTICE

You can start the engine with the shift lever in the N (Neutral) position; however; we recommend that you start the engine with the shift lever in the P (Park) position for your safety.

Door / Hood / Trunk Open

OJF045224L

- This warning message means that door, hood, or trunk is open.
- The hood warning message will appear on the LCD display when hood is open.

  The warning chime will operate when the vehicle is being driven at or above 3 km/h (2 mph) with the hood open.

Sunroof Open (if equipped)

OJF045216L

- This warning message illuminates if you turn off the engine when the sunroof is open.

Icy road warning light (if equipped)

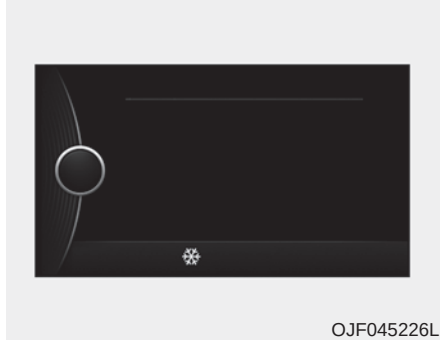

OJF045226L

This warning light is to warn the driver the road may be icy.

When the temperature on the outside temperature gauge is approximately below 4°C (40°F), the Icy Road Warning Light and Outside Temperature Gauge blinks 5 times, and then illuminates. Also, the warning chime sounds 1 times.

✻ NOTICE

If the icy road warning light appears while driving, you should drive more attentively and refraining from speeding, rapid acceleration, sudden braking or sharp turning.

Align steering wheel (if equipped)

- This warning message illuminates if you start the engine when the steering wheel is turned to more than 90 degrees to the left or right.
- It means that you should turn the steering wheel and make the angle of the steering wheel less than 30 degrees.

Low Washer Fluid (if equipped)

- This warning message illuminates on the service reminder mode if the washer fluid level in the reservoir is nearly empty.
- It means that you should refill the washer fluid.

Turn FUSE SWITCH on

- This warning message illuminates if the fuse switch on the fuse box is OFF.
- It means that you should turn the fuse switch on.

❈For more details, refer to “Fuses” in chapter 8.

Low Fuel

This warning message illuminates if the fuel tank is nearly empty.

Add fuel as soon as possible.

Check High Beam Assist (HBA) system (if equipped)

This warning message illuminates if the high beam assist system has a malfunction. In this case, have your vehicle inspected by an authorized Kia dealer.

Check headlight

This warning message illuminates if there is a malfunction (burned-out bulb except LED lamp or circuit malfunction) with the headlamp. In this case, have your vehicle inspected by an authorized Kia dealer.

✻ NOTICE

- **When replacing the bulb, use the same wattage bulb.**
  For more information, refer to “BULB WATTAGE” in chapter 9.
- **If different wattage bulb is equipped with the vehicle, this warning message is not displayed.**

Check Forward Collision-avoidance Assist system (if equipped)

- This warning message illuminates if there is a malfunction with the Forward Collision-avoidance Assist (FCA) system. In this case, have your vehicle inspected by an authorized Kia dealer.

❊For more details, refer to “Forward Collision-avoidance Assist(FCA) system” in chapter 6.

Device in wireless charger (if equipped)

If a smart phone is still left on the wireless charging pad unattended, even when the ignition switch or Engine Start/Stop Button is in ACC OFF and the instrument panel's one time driving information mode has finished, a warning message will lit up on the instrument panel.

❊For more details, refer to “Smart Phone Wireless Charger” in this chapter.

Check Active Air Flap System

This warning message illuminates in the following situations:

- There is a malfunction with the actuator flap
- There is a malfunction with the actuator air flap controller
- The air flap does not open

When all of the above conditions are fixed, the warning will disappear.

Check Hybrid system

This warning message illuminates when there is a problem with the hybrid control system.

Refrain from driving when the warning message is displayed.

In this case, have your vehicle inspected by an authorized Kia dealer.

Check Hybrid system. Turn engine off.

This warning message illuminates when there is a problem with the hybrid system. The “ ” indicator will blink and a warning chime will sound until the problem is solved.

In this case, have your vehicle inspected by an authorized Kia dealer.

Check Hybrid system. Do not start engine.

This warning message illuminates when the hybrid battery power (SOC) level is low. A warning chime will sound until the problem is solved.

In this case, have your vehicle inspected by an authorized Kia dealer.

Stop vehicle and check power supply

This warning message illuminates when a failure occurs in the power supply system.

In this case, park the vehicle in a safe location and tow your vehicle to the nearest authorized Kia dealer and have the vehicle inspected.

Stop vehicle to charge battery

This warning message illuminates when the hybrid battery power (SOC) level is low.

In this case, park the vehicle in a safe location and wait until the hybrid battery is charged.

Refuel to prevent Hybrid battery damage

This warning message illuminates when the fuel tank is nearly empty.

You should refill the fuel tank to prevent hybrid battery damage.

Refill inverter coolant

This warning message illuminates when the inverter coolant is nearly empty.

You should refill the inverter coolant.

Check regenerative brakes

This warning message illuminates when the brake performance is low or the regenerative brake does not work properly due to a failure in the brake system.

In this case, it may take longer for the brake pedal to operate and the braking distance may become longer.

Stop vehicle and check regen. brakes

This warning message is displayed when a failure occurs in the brake system.

In this case, park the vehicle in a safe location and tow your vehicle to the nearest authorized Kia dealer and have the vehicle inspected.

Coasting guide (if equipped)

A chime will sound and the coasting guide indicator will blink four times to inform the driver when to take the foot off the accelerator by anticipating a decelerating event* based on an analysis of driving routes and road conditions based on the navigation. It encourages the driver to remove foot from the pedal and allow coasting down the road with EV motor only. This helps prevent unnecessary fuel consumption and may increases fuel efficiency.

❈ Example of a deceleration event is going down an extended hill, slowing down approaching a toll booth, and approaching reduced speed zones.

• User settings

Press the Engine Start/Stop button and put the shift lever in P(Park). In the User Settings Mode, select Driving Assist, Coasting Guide, and then On to turn on the system. Cancel the selection of coasting guide to turn off the system. For the explanation of the system, press and hold the [OK] button.

• Operation conditions

To activate the system, take the following procedures. Enter your destination information on the navigation and select the driving route. Select the ECO mode in the Integrated Driving Control System. Then, satisfy the following.

- The driving speed should be between 60 km/h (37 mph) and 160km/h (99 mph).

❈ The operating speed may vary due to difference between instrument cluster and navigation effected by tire inflation level.

Unplug vehicle to start (Plug-in hybrid)

This message is displayed when you start the engine without unplugging the charging cable. Unplug the charging cable, and then start the vehicle.

Remaining time (Plug-in hybrid)

This message is displayed to notify the estimated remaining time to fully charge the battery.

Shift to P to charge (Plug-in hybrid)

This message is displayed when the charging connector is plugged with the shift lever in R (Reverse), N (Neutral) or D (Drive). Move the shift lever to P (Park) and re-start the charging process.

EV/HEV/CHG modes (Plug-in hybrid)

A corresponding message is displayed when a mode is selected by pressing the HEV button.

Battery charged. Maintaining current mode (Plug-in hybrid)

This message is displayed when unable to convert to charging mode even when pressing and holding the HEV button during EV/HEV mode driving because the high-voltage(hybrid) battery is already fully charged.

Low battery. Maintaining Hybrid mode (Plug-in hybrid)

This message is displayed when unable to convert to EV mode even when pressing the HEV button during HEV mode driving due to insufficient high-voltage(hybrid) battery level.

Low battery temp. Maintaining current (Plug-in hybrid)

This message is displayed when unable to convert to EV mode even when pressing the HEV button during HEV mode driving due to low battery temperature.

Charging complete. Switching to Hybrid (Plug-in hybrid)

This message is displayed when automatically converting to HEV mode due to completed battery charging during charging mode driving.

Charger Error! (Plug-in hybrid)

This message is displayed when there is a problem with the charger.

The purpose of this message is to let you know an error has occurred in charger itself not in vehicle.

Low/High System Temp. Maintaining Hybrid (Plug-in hybrid)

This message is displayed when unable to convert to EV mode even when pressing the HEV button during HEV mode driving due to low/high system temperature.

Switching to Hybrid mode to allow heating (Plug-in hybrid)

- When the coolant temperature is lower than -14°C (57°F), and you turn the climate control On for heating, the above message will be displayed in the cluster. Then, the vehicle will automatically switch to HEV mode.
- When the coolant temperature is higher than -14°C (57°F), or you turn the climate control Off, the vehicle will automatically return to EV mode.

Wait until fuel door opens (Plug-in hybrid)

This message is displayed when you attempt to open the fuel filler lid with the fuel tank pressurized. Wait until the fuel tank is depressurized.

✻ NOTICE

- **It may take up to 20 seconds to open fuel filler lid.**
- **When the fuel filler lid is frozen and does not open after 20 seconds at freezing temperature, slightly tap the fuel filler lid and then attempt to open it.**

Fuel door open (Plug-in hybrid)

This message is displayed when the fuel filler lid is opened.

Also means “Ready to refuel”.

Check fuel door (Plug-in hybrid)

This message is displayed when the fuel filler lid is open or an abnormality has occurred.

Refuel after stopping (Plug-in hybrid)

This message is displayed when the fuel filler lid open button is pressed when a vehicle equipped with a plug-in hybrid seal-type fuel tank is in motion (vehicle speed is greater than 0 km/h(mi/h)).

Disconnect charging cable before opening fuel door (Plug-in hybrid)

This message is displayed when you press the fuel filler lid open button while charging.

This message explains that refueling is allowed to finish charging.

Fuel lid is not opened when charging cable is connected to vehicle.

Charging Door Open (Plug-in hybrid)

This message indicates that the charging door is open while in driving-ready state to encourage you to inspect and close the door.

(Driving with the charging door open may result in moisture inflow or damage. This message is used to prevent such occurrences.)

WARNING AND INDICATOR LIGHTS

Warning lights

✻ NOTICE - Warning lights

Make sure that all warning lights are OFF after starting the engine. If any light is still ON, this indicates a situation that needs attention.

Hybrid system warning light

This warning light illuminates:

when there is a malfunction with the hybrid system.

In this case, have the vehicle inspected by an authorized Kia dealer.

Air bag Warning Light

This warning light illuminates:

- Once you set the Engine Start/Stop Button to the ON position.
  - It illuminates for approximately 6 seconds and then goes off.
- When there is a malfunction with the SRS.

  In this case, have your vehicle inspected by an authorized Kia dealer.

Seat Belt Warning Light

This warning light informs the driver that the seat belt is not fastened.

❊ For more details, refer to the “Seat Belts” in chapter 3.

Parking Brake & Brake Fluid Warning Light

This warning light illuminates:

- Once you set the Engine Start/Stop Button to the ON position.
  - It illuminates for approximately 3 seconds
  - It remains on if the parking brake is applied.
- When the parking brake is applied.
- When the brake fluid level in the reservoir is low.
  - If the warning light illuminates with the parking brake released, it indicates the brake fluid level in reservoir is low.

If the brake fluid level in the reservoir is low:

1. Drive carefully to the nearest safe location and stop your vehicle.
2. With the engine stopped, check the brake fluid level immediately and add fluid as required (For more details, refer to “Brake Fluid” in chapter 8).

Then check all brake components for fluid leaks. If any leaks in the brake system are still found, the warning light remains on, or the brakes do not operate properly, do not drive the vehicle.

In this case, have your vehicle towed to an authorized Kia dealer and inspected.

Dual-diagonal braking system

Your vehicle is equipped with dual-diagonal braking systems. This means you still have braking on two wheels even if one of the dual systems should fail.

With only one of the dual systems working, greater pedal pressure will be required to stop the vehicle.

Also, the vehicle will require increased stopping distance with only a portion of the brake system working.

If the brakes fail while you are driving, shift to a lower gear for additional engine braking and stop the vehicle as soon as it is safe to do so.

Driving the vehicle with a warning light ON is dangerous. If the Parking Brake & Brake Fluid Warning Light illuminate with the parking brake released, it indicates that the brake fluid level is low.

In this case, have your vehicle inspected by an authorized Kia dealer.

Anti-lock Brake System (ABS) Warning Light

This warning light illuminates:

- Once you set the Engine Start/Stop Button to the ON position.
  - It illuminates for approximately 3 seconds and then goes off.
- When there is a malfunction with the ABS (The normal braking system will still be operational without the assistance of the anti-lock brake system).

  In this case, have your vehicle inspected by an authorized Kia dealer.

Electronic Brake force Distribution (EBD) System Warning Light

These two warning lights illuminate at the same time while driving:

- When the ABS and regular brake system may not work normally.

  In this case, have your vehicle inspected by an authorized Kia dealer.

⚠ WARNING - Electronic Brake force Distribution (EBD) System Warning Light

When both ABS and Parking Brake & Brake Fluid Warning Lights are on, the brake system will not work normally and you may experience an unexpected and dangerous situation during sudden braking thereby increasing the risk of a crash and injury. In this case, avoid high speed driving and abrupt braking. Have your vehicle inspected by an authorized Kia dealer as soon as possible.

✻ NOTICE - Electronic Brake force Distribution (EBD) System Warning Light

When the ABS Warning Light is on or both the ABS and the Parking Brake & Brake Fluid Warning Lights are on, the speedometer, odometer, or tripmeter may not work. Also, the EPS Warning Light may illuminate and the steering effort may increase or decrease.
In this case, have your vehicle inspected by an authorized Kia dealer as soon as possible.

Regenerative Brake Warning Light

This warning light illuminates :

When the regenerative brake does not operate and the brake does not perform well. This causes the Brake Warning light (red) and Regenerative Brake Warning Light (yellow) to illuminate simultaneously.

In this case, drive safely and have your vehicle inspected by an authorized Kia dealer.

Electronic Power Steering (EPS) Warning Light

This warning light illuminates:

- Once you set the Engine Start/Stop Button to the ON position.
  - It remains on until the engine is started.
- When there is a malfunction with the EPS.

  In this case, have your vehicle inspected by an authorized Kia dealer.

Malfunction Indicator Lamp (MIL)

This warning light illuminates:

- Once you set the Engine Start/Stop Button to the ON position.
  - It remains on until the engine is started.
- When there is a malfunction with the emission control system.

  In this case, have your vehicle inspected by an authorized Kia dealer.

⚠ **CAUTION - Malfunction Indicator Lamp (MIL)**

Driving with the Malfunction Indicator Lamp (MIL) on may cause damage to the emission control systems which could affect drivability and/or fuel economy.

⚠ **CAUTION - Catalytic Converter Damage**

If the Malfunction Indicator Lamp (MIL) illuminates, potential catalytic converter damage is possible which could result in loss of engine power.

In this case, have your vehicle inspected by an authorized Kia dealer as soon as possible.

Charging System Warning Light

This warning light illuminates:

- Once you set the Engine Start/Stop Button to the ON position.
  - It remains on until the engine is started.
- When there is a malfunction with either the alternator or electrical charging system.

If there is a malfunction with either the alternator or electrical charging system:

1. Drive carefully to the nearest safe location and stop your vehicle.
2. Turn the engine off and check the alternator drive belt for looseness or breakage.

   If the belt is adjusted properly, there may be a problem in the electrical charging system.

   In this case, have your vehicle inspected by an authorized Kia dealer as soon as possible.

Engine Oil Pressure Warning Light

This warning light illuminates:

- Once you set the Engine Start/Stop Button to the ON position.
  - It remains on until the engine is started.
- When the engine oil pressure is low.

If the engine oil pressure is low:

1. Drive carefully to the nearest safe location and stop your vehicle.
2. Turn the engine off and check the engine oil level (For more details, refer to “Engine Oil” in chapter 8). If the level is low, add oil as required.

   If the warning light remains on after adding oil or if oil is not available, have your vehicle inspected by an authorized Kia dealer as soon as possible.

⚠ CAUTION - Engine damage

If the engine is not stopped immediately after the engine oil pressure warning light is illuminated and stays on while the engine is running, serious engine damage may result.

If the warning light stays on while the engine is running, it indicates that there may be serious engine damage or malfunction. In this case,

1. Stop the vehicle as soon as it is safe to do so.
2. Turn off the engine and check the oil level. If the oil level is low, fill the engine oil to the proper level.
3. Start the engine again. If the warning light stays on after the engine is started, turn the engine off immediately. In this case, have your vehicle inspected by an authorized Kia dealer.

Low Tire Pressure Warning Light (if equipped)

This warning light illuminates:

- Once you set the Engine Start/Stop Button to the ON position.
  - It illuminates for approximately 3 seconds and then goes off.
- When one or more of your tires are significantly underinflated.

❊For more details, refer to “Tire Pressure Monitoring System (TPMS)” in chapter 7.

This warning light remains on after blinking for approximately 60 seconds or repeats blinking on and off at the intervals of approximately 3 seconds:

- When there is a malfunction with the TPMS.

  In this case, have your vehicle inspected by an authorized Kia dealer as soon as possible.

❊For more details, refer to “Tire Pressure Monitoring System (TPMS)” in chapter 7.

⚠ WARNING - Low tire pressure

- **Significantly low tire pressure makes the vehicle unstable and can contribute to loss of vehicle control and increased braking distances.**
- **Continued driving on low pressure tires will cause the tires to overheat and fail.**

- The TPMS cannot alert you to severe and sudden tire damage caused by external factors.
- If you notice any vehicle instability, immediately take your foot off the accelerator pedal, apply the brakes gradually with light force, and slowly move to a safe position off the road.

Electronic Parking Brake (EPB) Warning Light (if equipped)

EPB

This warning light illuminates:

- Once you set the Engine Start/Stop Button to the ON position.
  - It illuminates for approximately 3 seconds and then goes off.
- When there is a malfunction with the EPB.

  In this case, have your vehicle inspected by an authorized Kia dealer.

✻ NOTICE - Electronic Parking Brake (EPB) Warning Light

The Electronic Parking Brake (EPB) Warning Light may illuminate when the Electronic Stability control (ESC) Indicator Light comes on to indicate that the ESC is not working properly (This does not indicate malfunction of the EPB).

Master Warning light (if equipped)

- This warning light informs the driver of the following situations
  - LED head lamp malfunction (if equipped)
  - Smart Cruise Control with Stop & Go malfunction (if equipped)
  - Forward Collision-Avoidance Assist malfunction (if equipped)
  - Blind-Spot Collision Warning (BCW) malfunction (if equipped)
  - Lamp malfunction
  - High Beam Assist malfunction (if equipped)
  - Tire Pressure Monitoring System (TPMS) malfunction (if equipped)

The Master Warning Light illuminates if one or more of the above warning situations occur.

If the warning situation is resolved, the master warning light turns off.

Forward Collision-avoidance Assist Warning light (FCA, if equipped)

This indicator light illuminates:

- When there is a malfunction with the FCA.

In this case, have the vehicle inspected by an authorized Kia dealer.

Adaptive Front Lighting System (AFLS) Warning Light (if equipped)

AFLS

This warning light blinks:

- When there is a malfunction with the AFLS.

If there is a malfunction with the AFLS:

1. Drive carefully to the nearest safe location and stop your vehicle.
2. Turn the engine off and restart the engine. If the warning light remains on, have your vehicle inspected by an authorized Kia dealer.

Engine Coolant Temperature Warning Light

This warning light illuminates:

- When the engine coolant temperature is above 120°C (248°F). This means that the engine is overheated and may be damaged.

  If your vehicle is overheated, refer to “Overheating” in chapter 7.

⚠ **CAUTION - Engine Overheating**

Do not continue driving with the engine overheated. Otherwise the engine may be damaged.

Indicator Lights

Charging Cable Connection Indicator (Plug-in hybrid)

This indicator illuminates in red when the charging cable is connected.

Electronic Stability Control (ESC) Indicator Light

This indicator light illuminates:

- Once you set the Engine Start/Stop Button to the ON position.
  - It illuminates for approximately 3 seconds and then goes off.
- When there is a malfunction with the ESC system.

  In this case, have your vehicle inspected by an authorized Kia dealer.

This indicator light blinks:

While the ESC is operating.

❊For more details, refer to “Electronic Stability Control (ESC)” in chapter 6.

Electronic Stability Control (ESC) OFF Indicator Light

This indicator light illuminates:

- Once you set the Engine Start/Stop Button to the ON position.
  - It illuminates for approximately 3 seconds and then goes off.
- When you deactivate the ESC system by pressing the ESC OFF button.

❊For more details, refer to “Electronic Stability Control (ESC)” in chapter 6.

Immobilizer Indicator Light (Without Smart Key)

This indicator light illuminates:

- When the vehicle detects the immobilizer in your key properly while the Engine Start/Stop button is ON.
  - At this time, you can start the engine.
  - The indicator light goes off after starting the engine.

This indicator light blinks:

- When there is a malfunction with the immobilizer system.

  In this case, have your vehicle inspected by an authorized Kia dealer.

Immobilizer Indicator Light (With Smart Key)

This indicator light illuminates for up to 30 seconds:

- When the vehicle detects the smart key in the vehicle properly while the Engine Start/Stop Button is ACC or ON.
  - At this time, you can start the engine.
  - The indicator light goes off after starting the engine.

This indicator light blinks for a few seconds:

- When the smart key is not in the vehicle.
  - At this time, you can not start the engine.

This indicator light illuminates for 2 seconds and goes off:

- When the vehicle cannot detect the smart key which is in the vehicle while the Engine Start/Stop Button is ON.

  In this case, have your vehicle inspected by an authorized Kia dealer.

This indicator light blinks:

- When the battery of the smart key is weak.
  - At this time, you cannot start the engine. However, you can start the engine if you press the Engine Start/Stop Button with the smart key. (For more details, refer to “Starting the Engine” in chapter 6).
- When there is a malfunction with the immobilizer system.

  In this case, have your vehicle inspected by an authorized Kia dealer.

Turn Signal Indicator Light

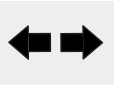

This indicator light blinks:

- When you turn the turn signal light on.

If any of the following occurs, there may be a malfunction with the turn signal system. In this case, have your vehicle inspected by an authorized Kia dealer.

- The indicator light does not blink but illuminates.
- The indicator light blinks more rapidly.
- The indicator light does not illuminate at all.

High Beam Indicator Light

This indicator light illuminates:

- When the headlights are on and in the high beam position
- When the turn signal lever is pulled into the Flash-to-Pass position.

High beam assist indicator (if equipped)

This warning light illuminates :

- When the high-Beam is on with the light switch in the AUTO light position.
- If your vehicle detects oncoming or preceding vehicles, the High beam assist system will switch the high beam to low beam automatically.

❊For more details, refer to “High beam assist” in this chapter.

Light ON Indicator Light

This indicator light illuminates:

- When the tail lights or headlights are on.

Cruise Indicator Light (if equipped)

CRUISE

This indicator light illuminates:

- When the cruise control system is enabled.

❊For more details, refer to “Cruise Control System” in chapter 6.

Cruise SET Indicator Light (if equipped)

SET

This indicator light illuminates:

- When the cruise control speed is set.

❊For more details, refer to “Cruise Control System” in chapter 6.

AUTO HOLD Indicator Light (if equipped)

AUTO HOLD

This indicator light illuminates:

- [White] When you activate the auto hold system by pressing the AUTO HOLD button.
- [Green] When you stop the vehicle completely by depressing the brake pedal with the auto hold system activated.
- [Yellow] When there is a malfunction with the auto hold system.

  In this case, have your vehicle inspected by an authorized Kia dealer.

❊For more details, refer to “Auto Hold” in chapter 6.

Lane Departure Warning(LDW) System Indicator Light (if equipped)

This indicator light illuminates:

- [White] When the lane departure warning system does not detect the lane marker or vehicle speed is less than 65 km/h (40 mph).
- [Green] When the lane departure warning system detects the lane marker.
- [Yellow] When there is a malfunction with the lane departure warning system.

  In this case, have your vehicle inspected by an authorized Kia dealer.

❊ For more details, refer to “Lane Departure Warning(LDW) System” in chapter 6.

ECO Indicator Light (if equipped)

This indicator light illuminates :

- When the Active ECO system is activated by pressing the DRIVE mode button.
- The ECO indicator (green) will illuminate to show that the Active ECO is operating.

❊For more details, refer to “Drive Mode Integrated Control System" in chapter 6.

SPORT Mode Indicator Light (if equipped)

This indicator light illuminates:

- When you select “SPORT” mode as drive mode.

❊For more details, refer to “Drive Mode” in chapter 6.

EV Mode Indicator

This indicator illuminates when the vehicle is driven by the electric motor.

Ready Indicator

This indicator illuminates :

When the vehicle is ready to be driven.

- ON : Normal driving is possible.
- OFF : Normal driving is not possible, or a problem has occurred.
- Blinking : Emergency driving.

When the ready indicator goes OFF or blinks, there is a problem with the system. In this case, have your vehicle inspected by an authorized Kia dealer.

PARKING DISTANCE WARNING-REVERSE (IF EQUIPPED)

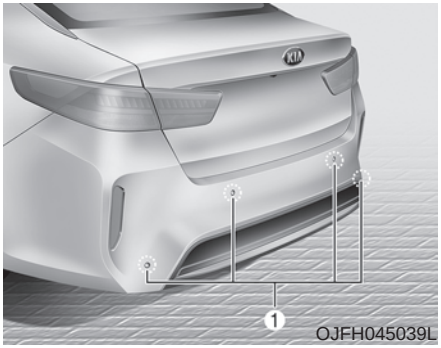

The parking distance warning-reverse assists the driver during backward movement of the vehicle by chiming if any object is sensed within a distance of 120 cm (47 in.) behind the vehicle.

This system is a supplemental system and it is not intended to nor does it replace the need for extreme care and attention of the driver. The sensing range and objects detectable by the back sensors (1) are limited. Whenever backing-up, pay as much attention to what is behind you as you would in a vehicle without a parking distance warning-reverse.

⚠ WARNING

- Parking distance warning-reverse

Never rely solely on the parking distance warning-reverse system. Always perform a visual inspection to make sure the vehicle is clear of all obstructions before moving the vehicle in any direction. Stop immediately if you are aware of a child anywhere near your vehicle. Some objects may not be detected by the sensors, due to the object's size or material.

Operation of the parking distance warning-reverse

Operating condition

- This system will activate when backing up with the ignition switch ON.

  If the vehicle is moving at a speed over 5 km/h (3 mph), the system may not be activated correctly.
- The sensing distance while the back-up warning system is in operation is approximately 120 cm (47 in.) at the rear bumper center area, 60 cm (23.5 in.) at the rear bumper both side area.
- When more than two objects are sensed at the same time, the closest one will be recognized first.

Types of warning sound

- When an object is 120 cm to 61 cm (47 in. to 24 in.) from the rear bumper: Buzzer beeps intermittently.
- When an object is 60 cm to 31 cm (24 in. to 12 in.) from the rear bumper: Buzzer beeps more frequently.
- When an object is within 30 cm (12 in.) of the rear bumper:

  Buzzer sounds continuously.

Non-operational conditions of the parking distance warning-reverse system

The parking distance warning-reverse system may not operate properly when:

1. Moisture is frozen to the sensor. (It will operate normally once the moisture clears.)
2. The sensor is covered with foreign matter, such as snow or water, or the sensor cover is blocked. (It will operate normally when the material is removed or the sensor is no longer blocked.)
3. Driving on uneven road surfaces (unpaved roads, gravel, bumps, gradient).
4. Objects generating excessive noise (vehicle horns, loud motorcycle engines, or truck air brakes) are within range of the sensor.
5. Heavy rain or water spray exists.
6. Wireless transmitters or mobile phones are within range of the sensor.
7. The sensor is covered with snow.
8. Trailer towing.

The detecting range may decrease when:

1. The sensor is covered with foreign matter such as snow or water. (The sensing range will return to normal when removed.)
2. Outside air temperature is extremely hot or cold.

The following objects may not be recognized by the sensor:

1. Sharp or slim objects such as ropes, chains or small poles.
2. Objects which tend to absorb the sensor frequency such as clothes, sound absorbent material or snow.
3. Undetectable objects smaller than 1 m (40 in.) in height and narrower than 14 cm (6 in.) in diameter.

Parking distance warning-reverse system precautions

- The parking distance warning-reverse may not sound consistently depending on the speed and shapes of the objects detected.
- The parking distance warning-reverse system may malfunction if the vehicle bumper height or sensor installation has been modified or damaged. Any non-factory installed equipment or accessories may also interfere with the sensor performance.
- The sensor may not recognize objects less than 40 cm (15 in.) from the sensor, or it may sense an incorrect distance. Use caution.
- When the sensor is frozen or covered with snow, dirt, or water, the sensor may be inoperative until the material is removed using a soft cloth.
- To prevent damage, do not push, scratch or strike the sensor.

✻ NOTICE

This system can only sense objects within the range and location of the sensors. It cannot detect objects in other areas where sensors are not installed. Also, small or slim objects, such as poles or objects located between sensors may not be detected by the sensors.
Always visually check behind the vehicle when backing up.
Be sure to inform any drivers of the vehicle that may be unfamiliar with the system regarding the systems' capabilities and limitations.

Self-diagnosis

If you don't hear an audible warning sound or if the buzzer sounds intermittently when shifting the gear to the R (Reverse) position, this may indicate a malfunction in the parking distance warning-reverse system. If this occurs, have your vehicle checked by an authorized Kia dealer as soon as possible.

✻ NOTICE

Your new vehicle warranty does not cover any accidents or damage to the vehicle or injuries to its occupants due to a parking distance warning-reverse system malfunction. Always drive safely and cautiously.

REAR VIEW MONITOR (IF EQUIPPED)

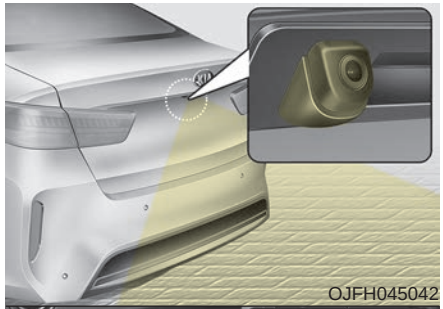

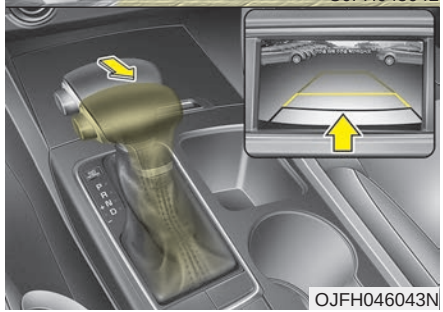

The rear view monitor will activate with the ignition switch ON and the shift lever in the R (Reverse) position.

- This system is a supplemental system only. It is the responsibility of the driver to always check the inside/outside rearview mirrors and the area behind the vehicle before and while backing up.
- Always keep the camera lens clean. If lens is covered with foreign matter, the camera may not operate normally.

❊ If your vehicle is equipped with AVN (Audio, Video and Navigation) system, rearview display image will show through the AVN monitor while backing-up. Refer to a separately supplied manual for detailed information.

⚠ WARNING
- Backing & using monitor

Never rely solely on the rear view monitor. You must always use methods of viewing the area behind you including looking over both shoulders as well as continuously checking all three rear view mirrors. Due to the difficulty of ensuring that the area behind you remains clear, always back up slowly and stop immediately if you suspect that a person, and especially a child, might be behind you.

360° CAMERA MONITORING SYSTEM (IF EQUIPPED)

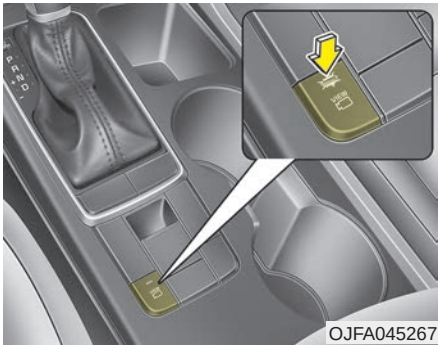

The 360° camera monitoring system is not a substitute for proper and safe parking procedures. The 360° camera monitoring system may not detect every object surrounding the vehicle. Always drive safely and use caution when parking.

The 360° camera monitoring system can assist in parking by allowing the driver to see around the vehicle. Push the button into the [ON] position to operate the system.

To cancel the system, push the button again.

Operating conditions

- When the Engine Start/Stop Button is ON position
- When the transaxle is on D, N or R
- When the vehicle speed is not over 15 km/h (9 mph)

- When the vehicle speed is over 15 km/h (9 mph), the 360° camera monitoring system is turned off. If the vehicle speed then decreases below 15 km/h (9 mph), the 360° camera monitoring system will not automatically turn on again. To operate again, push the 360° camera monitoring system button.
- When the vehicle moves backwards, regardless of On/Off of button and vehicle speed, the 360° camera monitoring system operates automatically.
- When the trunk and driver/passenger door are opened and the outside mirror is folded, a warning is illuminated in the 360° camera monitoring system.
- If the 360° camera monitoring system is not operating normally, the system should be checked by an authorized Kia dealer.
- When the vehicle moves over 15 km/h (9 mph) forward after moving backward, the 360° camera monitoring system screen will be turned off.

⚠ WARNING

This system is a supplemental system only. It is the responsibility of the driver to always check the area around the vehicle before and while moving.

LIGHTING

Battery saver function

- The purpose of this feature is to prevent the battery from being discharged if the lights are left in the ON position. The system automatically shuts off the parking lights 30 seconds after the ignition key is removed and the driver's door is opened and closed.
- With this feature, the parking lights will turn off automatically if the driver parks on the side of the road at night and opens the driver's side door.

  If necessary, to keep the parking lights on when the ignition key is removed, perform the following:

  1) Open the driver-side door.
  2) Turn the parking lights OFF and ON again using the light switch on the steering column.

Daytime running light

The Daytime Running Lights (DRL) can make it easier for others to see the front of your vehicle during the day. DRL can be helpful in many different driving conditions, and it is especially helpful after dawn and before sunset.

The DRL system will turn the dedicated lamp OFF when:

1. The headlight switch is ON.
2. The engine is OFF.
3. Engaging the parking brake.

Lighting control

OJF045045

The light switch has a Headlight and a Parking light position.

To operate the lights, turn the knob at the end of the control lever to one of the following positions:

(1) OFF position

(2) Auto light position

(3) Parking & Tail light

(4) Headlight position

Parking & Tail light ( )

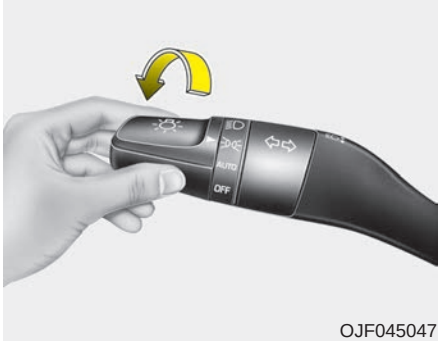

OJF045047

When the light switch is in the parking light position, the tail, license and instrument panel lights will turn ON.

Headlight position ( )

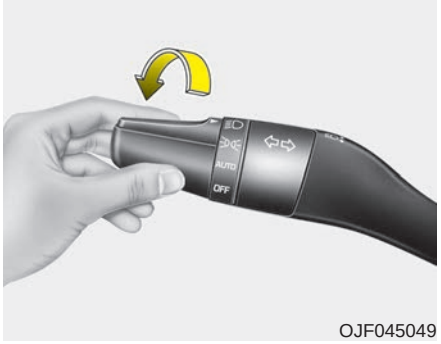

OJF045049

When the light switch is in the headlight position, the head, tail, license lights will turn ON.

✻ NOTICE

The ignition switch must be in the ON position to turn on the headlights.

Auto light position

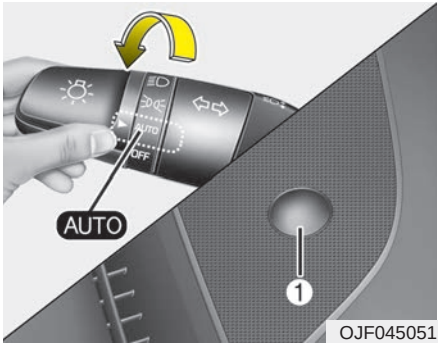

OJF045051

When the light switch is in the AUTO light position, the taillights and headlights will turn ON or OFF automatically depending on the amount of light outside the vehicle.

⚠ **CAUTION**

- ***Never place anything over the sensor (1) located on the instrument panel, this will ensure better auto-light system control.***
- ***Don't clean the sensor using a window cleaner, the cleaner may leave a light film which could interfere with sensor operation.***
- ***If your vehicle has window tint or other types of metallic coating on the front windshield, the Auto light system may not work properly.***

High beam operation

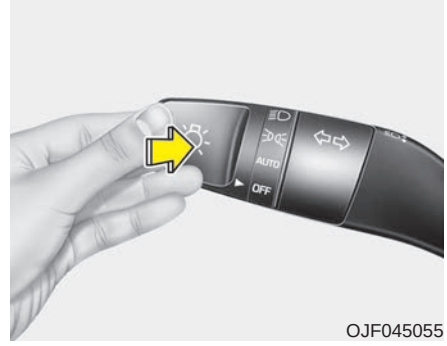

OJF045055

To turn on the high beam headlamp, push the lever away from you. The lever will return to its original position.

The high beam indicator will light when the headlight high beams are switched on.

To prevent the battery from being discharged, do not leave the lights on for a prolonged time while the engine is not running.

⚠ **WARNING - High beams**

Do not use high beam when there are other vehicles in front of or approaching your vehicle. Using high beam could obstruct the other driver's vision.

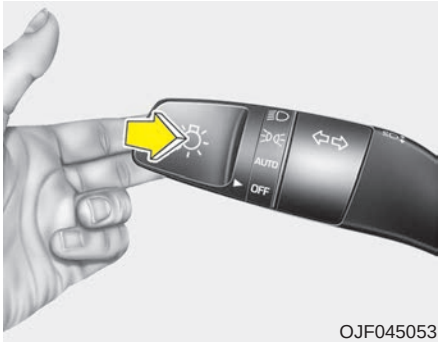

OJF045053

To flash the headlights, pull the lever towards you. It will return to the normal (low beam) position when released. The headlight switch does not need to be on to use this flashing feature.

High Beam Assist (if equipped)

OJFA045357

The High Beam Assist is a system that automatically adjusts the headlamp range (switches between high beam and low beam) according to the brightness of other vehicles and road conditions.

Operating condition

1. Place the light switch in the AUTO position.
2. Turn on the high beam by pushing the lever away from you.
3. The High Beam Assist ( ) indicator will illuminate.
4. The High Beam Assist will turn on when vehicle speed is above 40 km/h (25 mph).
5. The details of operation with the light switch while the High Beam Assist is on are below.
   (1) If the light switch is pushed away, the High Beam Assist will turn off and the high beam will be on continuously.
   (2) If the light switch is pulled towards you when the high beam is off, the high beam will be on without cancellation of the High Beam Assist. (When you release the light switch, the lever will move to the middle and the high beam will turn off.)

(3) If the light switch is pulled towards you when the high beam is on by the High Beam Assist, the low beam will be on and the High Beam Assist will turn off.

(4) If the light switch is turned to the headlamp position ( ) from AUTO position, the High Beam Assist will turn off and the low beam will be on continuously.

When the High Beam Assist is operating, the high beam switches to low beam in the following conditions.

- When the headlamp is detected from the on-coming vehicle.
- When the tail lamp is detected from the front vehicle.
- When headlamp/tail lamp of bicycle/motorcycle is detected.
- When the surrounding is sufficiently bright that high beams are not needed.
- When streetlights or other lights are detected.
- When the light switch is not in the AUTO position.
- When the High Beam Assist is off.
- When vehicle speed is below 24 km/h (15 mph).

Warning light and message

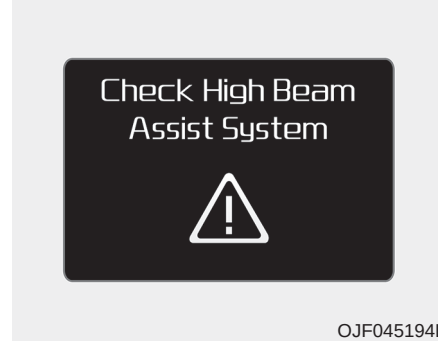

OJF045194L

When the High Beam Assist System is not working properly, the warning message will come on for a few second. After the message disappears, the master warning light ( ) will illuminate. Take your vehicle to an authorized Kia dealer and have the system checked.

⚠ **CAUTION**

The driver must be cautious in the following situations as the High Beam Assist system may not operate:

- ***When the light from on-coming or front vehicle is poor***
  - ***When the light from a vehicle is not detected because of lamp damage, hidden from sight, etc.***
  - ***When the lamp of a vehicle is covered with dust, snow or water.***
- ***When external condition is intervened***
  - ***When there is a similar shape lamp with the front vehicle's lamps.***
  - ***When the headlamp is not repaired or replaced at an authorized Kia dealer.***
  - ***When the headlamp aiming is not properly adjusted.***

(Continued)

(Continued)

- ***When driving on a narrow curved road, rough road, downhill or uphill.***
- ***When only part of the vehicle in front is visible on a cross-road or curved road.***
- ***When there is a traffic light, reflecting sign, flashing sign or mirror ahead.***
- ***When there is a temporary reflector or flash ahead (construction area).***
- ***When the road conditions are bad such as being wet, iced or covered with snow.***
- ***When a vehicle suddenly appears from a curve.***
- ***When the vehicle is tilted from a flat tire or being towed.***

(Continued)

(Continued)

- ***When front visibility is poor***
  - ***When the lamp from a vehicle is covered with dust, snow or water.***
  - ***When the light from a vehicle is not detected because of exhaust fume, smoke, fog, snow, etc.***
  - ***When the front window is covered with foreign matters.***
  - ***When it is hard to see because of fog, heavy rain or snow and etc.***

✻ NOTICE

- **Do not disassemble a front view camera temporarily for tinted window or attaching any types of coatings and accessories. If you disassemble the camera and assemble it again, take your vehicle to an authorized Kia dealer and have the system checked to need a calibration.**
- **When you replace or reinstall the windshield glass, front view camera, take your vehicle to an authorized Kia dealer and have the system checked.**
- **Be careful that water does not get into the High Beam Assist unit and do not remove or damage related parts of the High Beam Assist system.**
- **Do not place objects on the dashboard that reflect light such as mirrors, white paper, etc. The system may not be able to function if sunlight is reflected.**

(Continued)

(Continued)

- **At times, the High Beam Assist may not operate due to system limitations. The system is for your convenience only. It is the responsibility of the driver to use safe driving practices and always check the road conditions for your safety.**
- **When the system does not operate normally, change the lamp position manually between the high beam and low beam.**

Turn signals and lane change signals

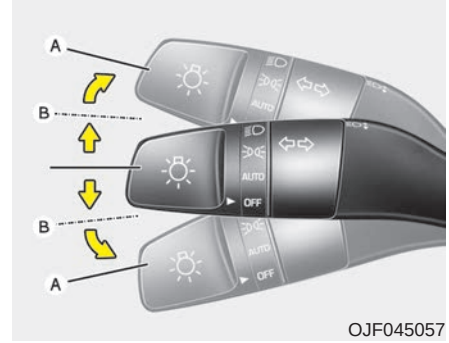

OJF045057

The ignition switch must be on for the turn signals to function. To turn on the turn signals, move the lever up or down (A). The green arrow indicators on the instrument panel indicate which turn signal is operating.

They will self-cancel after a turn is completed. If the indicator continues to flash after a turn, manually return the lever to the OFF position.

To signal a lane change, move the turn signal lever slightly and hold it in position (B). The lever will return to the OFF position when released.

If an indicator stays on and does not flash or if it flashes abnormally, one of the turn signal bulbs may be burned out and will require replacement.

✻ NOTICE

If an indicator flash is abnormally quick or slow, a bulb may be burned out or have a poor electrical connection in the circuit.

Check headlight

OJFA055274

This warning message illuminates if there is a malfunction (burned-out bulb except LED lamp or circuit malfunction) with the headlamp. In this case, have your vehicle inspected by an authorized Kia dealer.

✻ NOTICE

- **When replacing the bulb, use the same wattage bulb.**
  For more information, refer to "BULB WATTAGE" in chapter 9.
- **If a different wattage bulb is installed on the vehicle, this warning message is not displayed.**

Headlight leveling device (if equipped)

Automatic type

To ensure the proper headlight beam is used under various conditions, the headlight beam levels are automatically adjusted depending on the number of passengers, the weight in the trunk, and other driving conditions.

✻ NOTICE

If the headlight beam is irradiated to the high or low position, have the system be inspected by an authorized Kia dealer.
Do not attempt to inspect or replace the wiring yourself.

AFLS (Adaptive Front Lighting System) (if equipped)

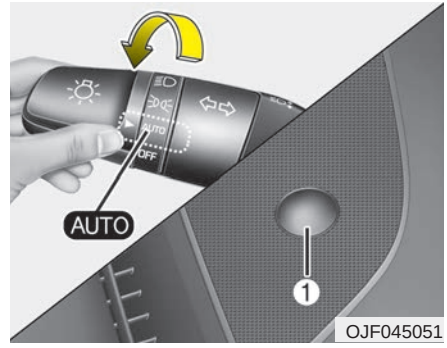

OJF045051

Adaptive front lighting system uses the steering angle and vehicle speed, to keep your field of vision wide by swiveling and leveling the headlamp.

Change the switch to the AUTO position when the engine is running. The adaptive front lighting system will operate when the headlamp is ON. To turn off the AFLS, change the switch to other positions. After turning the AFLS off, headlamp swiveling no longer occurs, but leveling operates continuously.

If the AFLS malfunction indicator comes on, the AFLS is not working properly. Drive to the nearest safe location and restart the engine. If the indicator continuously remains on, have system be checked by an authorized Kia dealer.

WIPERS AND WASHERS

Windshield wiper/washer

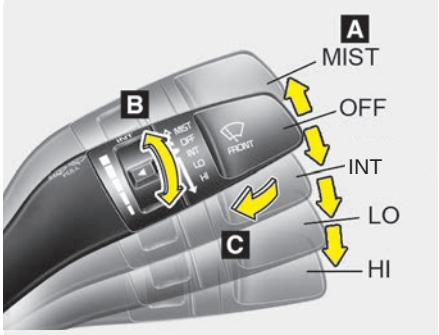

OJF045231L/Q

A : Wiper speed control (front)

- MIST – Single wipe
- OFF – Off
- INT – Intermittent wipe
- LO – Low wiper speed
- HI – High wiper speed

B : Intermittent control wipe time adjustment

C : Wash with brief wipes (front)*

* : if equipped

Windshield wipers

Operates as follows when the ignition switch is turned ON.

MIST : For a single wiping cycle, move the lever to this (MIST) position and release it. The wipers will operate continuously if the lever is held in this position.

OFF : Wiper is not in operation

INT : Wiper operates intermittently at the same wiping intervals. Use this mode in light rain or mist. To vary the speed setting, turn the speed control knob.

LO : Normal wiper speed

HI : Fast wiper speed

✻ NOTICE

If there is heavy accumulation of snow or ice on the windshield, defrost the windshield for about 10 minutes, or until the snow and/or ice is removed before using the windshield wipers to ensure proper operation.
If you do not remove the snow and/or ice before using the wiper and washer, it may damage the wiper and washer system.

Auto control (if equipped)

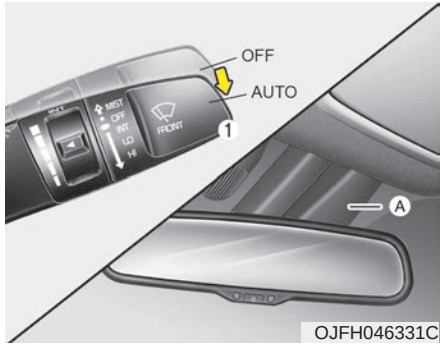

OJFH046331C

The rain sensor (A) located on the upper end of the windshield glass senses the amount of rainfall and controls the wiping cycle for the proper interval. The more it rains, the faster the wiper operates. When the rain stops, the wipers stop.

To vary the speed setting, turn the speed control knob (1).

If the wiper switch is set in AUTO mode when the engine start/stop button is in the ON position, the wiper will operate once to perform a self-check of the system. Set the wiper to OFF position when the wiper is not in use.

⚠ CAUTION

When the engine start/stop button is in the ON position and the windshield wiper switch is placed in the AUTO mode, use caution in the following situations to avoid damaging the rain sensors on the windshield:

- ***Do not touch the upper end of the windshield glass facing the rain sensor.***
- ***Do not wipe the upper end of the windshield glass with a damp or wet cloth.***
- ***Do not put pressure on the windshield glass.***

⚠ CAUTION

- ***When washing the vehicle, set the wiper switch in the OFF position to stop the auto wiper operation.***
- ***The wiper may operate and be damaged if the switch is set in the AUTO mode while washing the vehicle.***
- ***Do not remove the sensor cover located on the upper end of the passenger side windshield glass. Damage to system parts could occur and may not be covered by your vehicle warranty.***

(Continued)

(Continued)

- ***When starting the vehicle in winter, set the wiper switch in the OFF position. Otherwise, wipers may operate and ice may damage the windshield wiper blades. Always remove all snow and ice and defrost the windshield properly prior to operating the windshield wipers.***
- ***When tinting the windshield, be careful of any fluid getting into the sensor located in the top center of the front windshield. It may damage the related parts.***

Front windshield washers

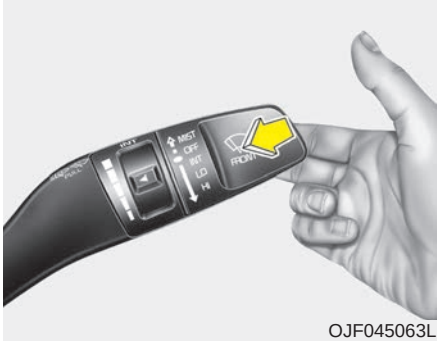

OJF045063L

In the OFF position, pull the lever gently toward you to spray washer fluid on the windshield and to run the wipers 1-3 cycles.

Use this function when the windshield is dirty.

The spray and wiper operation will continue until you release the lever.

If the washer does not work, check the washer fluid level. If the fluid level is not sufficient, you will need to add appropriate non-abrasive windshield washer fluid to the washer reservoir.

The reservoir filler neck is located in the front of the engine compartment on the passenger side.

⚠ CAUTION - Washer pump

To prevent possible damage to the washer pump, do not operate the washer when the fluid reservoir is empty.

⚠ WARNING - Obscured visibility

Do not use the washer in freezing temperatures without first warming the windshield with the defrosters; the washer solution could freeze on the windshield and obscure your vision.

⚠ **CAUTION - Wipers & windshields**

- ***To prevent possible damage to the wipers or windshield, do not operate the wipers when the windshield is dry.***
- ***To prevent damage to the wiper blades, do not use gasoline, kerosene, paint thinner, or other solvents on or near them.***
- ***To prevent damage to the wiper arms and other components, do not attempt to move the wipers manually.***

INTERIOR LIGHTS

Do not use the interior lights for extended periods when the engine is not running.

It may cause battery discharge.

⚠ WARNING - Interior Lights

Do not use the interior lights when driving in the dark. Accidents could happen because the view may be obscured by interior lights.

Automatic turn off function

The interior lights automatically turn off approximately 20 minutes after the ignition switch is turned off, if the lights are in the ON position.

If your vehicle is equipped with the theft alarm system, the interior lights automatically turn off approximately 5 seconds after the system is armed.

Room lamp

■ Type A

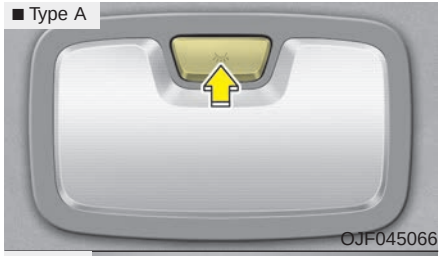

OJF045066

■ Type B

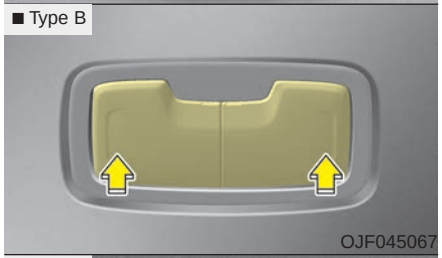

OJF045067

■ Type C

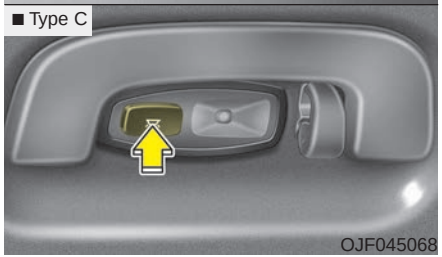

OJF045068

- : The light stays on at all times.

Map lamp

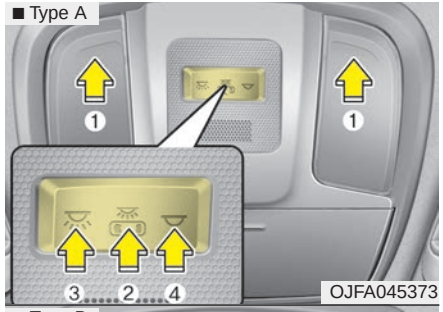

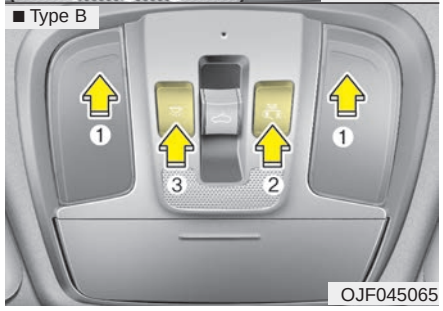

- Press the lens (1) to turn ON the map lamp.

  To turn the map lamp OFF press the lens (1) again.

- (2) : DOOR mode
  - The map lamp and room lamp come on when a door is opened. The lamps go out after approximately 30 seconds.
  - The map lamp and room lamp come on for approximately 30 seconds when doors are unlocked with a transmitter or smart key as long as the doors are not opened.
  - The map lamp and room lamp will stay on for approximately 20 minutes if a door is opened with the ignition switch in the ACC or OFF position.
  - The map lamp and room lamp will stay on continuously if the door is opened with the ignition switch in the ON position.
  - The map lamp and room lamp will go out immediately if the ignition switch is changed to the ON position or all doors are locked.
  - To turn off the DOOR mode, press the DOOR button (2) once again (not pressed).

✻ NOTICE

The DOOR mode and ROOM mode can not be selected at the same time.

Front Room Lamp:

- Type A

(3): Press this switch to turn the front and rear room lamps on.

(4): Press this switch to turn the front and rear room lamps off.

- Type B

(3): Press this switch to turn the front and rear room lamps on and off.

Trunk room lamp

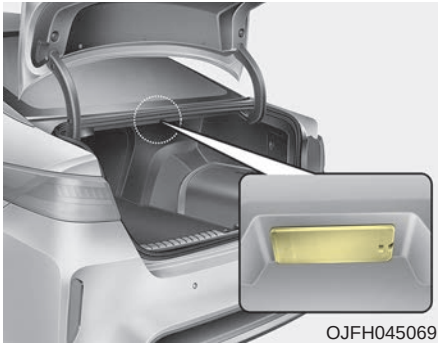

The trunk room lamp comes on when the trunk is opened.

✻ NOTICE

The trunk room lamp comes on as long as the trunk lid opens. To prevent unnecessary battery drain, close the trunk lid securely after using the trunk room.

Vanity mirror lamp

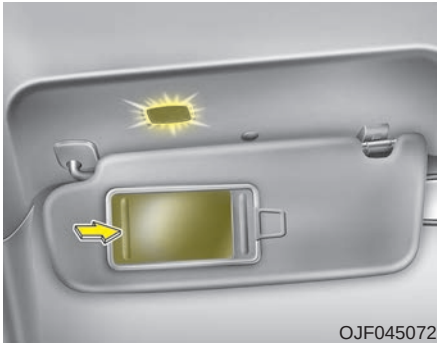

Opening the lid of the vanity mirror will automatically turn on the mirror light.

* The actual sunvisor lamp in the vehicle may differ from the illustration.

⚠ CAUTION - Vanity mirror lamp

Always have the switch in the off position when the vanity mirror lamp is not in use. If the sunvisor is closed without the lamp off, it may discharge the battery or damage the sunvisor.

Glove box lamp

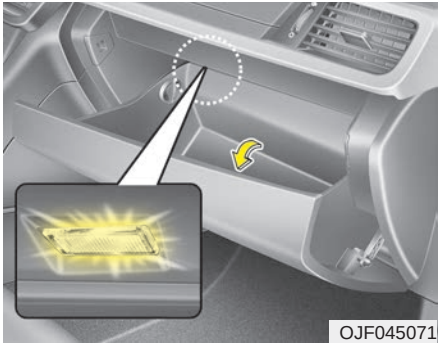

The glove box lamp comes on when the glove box is opened.

To prevent unnecessary battery drain, close the glove box securely after using the glove box.

WELCOME SYSTEM

Headlight (Headlamp) escort function

The headlights (and/or taillights) remain on for approximately 5 minutes after the ignition key is removed or turned to the ACC or OFF position. However, if the driver's door is opened and closed, the headlights are turned off after 15 seconds.

The headlights can be turned off by pressing the lock button on the transmitter or smart key twice or turning off the light switch from the headlight or Auto light position.

Interior light

When the interior light switch is in the DOOR position and all doors (and trunk) are locked and closed, the room lamp will come on for 30 seconds if any of the below is performed.

- With the smart key system
  - When the door unlock button is pressed on the smart key.
  - When the button of the outside door handle is pressed.

At this time, if you press the door lock button, the lamps will turn off immediately.

Pocket lamp

When all doors are locked and closed, the pocket lamp will come on for 15 seconds if any of the below is performed.

- With the smart key system
  - When the door unlock button is pressed on the smart key.
  - When the button of the outside door handle is pressed.

At this time, if you press the door lock button, the lamps will turn off immediately.

DEFROSTER

⚠ **CAUTION - Conductors**

To prevent damage to the conductors bonded to the inside surface of the rear window, never use sharp instruments or window cleaners containing abrasives to clean the window.

If you want to defrost and defog the front windshield, refer to “Windshield defrosting and defogging” in this section.

Rear window defroster

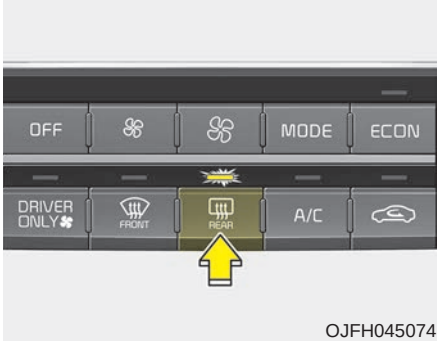

OJFH045074

The defroster heats the window to remove frost, fog and thin ice from the rear window, while the engine is running.

To activate the rear window defroster, press the rear window defroster button located in the center facia switch panel. The indicator on the rear window defroster button illuminates when the defroster is ON.

If there is heavy accumulation of snow on the rear window, brush it off before operating the rear defroster.

The rear window defroster automatically turns off after approximately 20 minutes or when the ignition switch is turned off. To turn off the defroster, press the rear window defroster button again.

Outside rearview mirror defroster

If your vehicle is equipped with the outside rearview mirror defrosters, they will operate at the same time you turn on the rear window defroster.

Wiper deicer

If your vehicle is equipped with the wiper deicer, it will operate at the same time you turn on the rear window defroster.

AUTOMATIC CLIMATE CONTROL SYSTEM

■ **Type A**

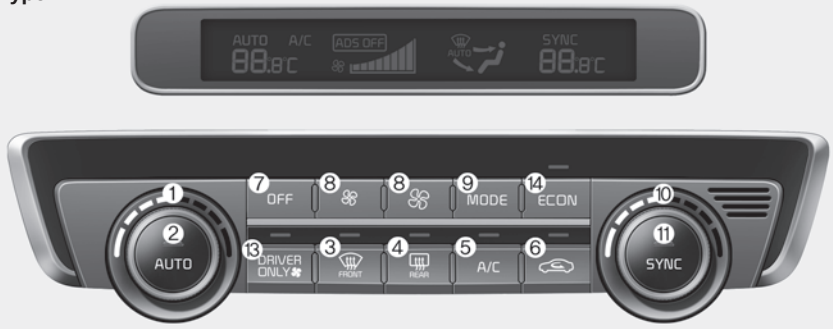

■ **Type B**

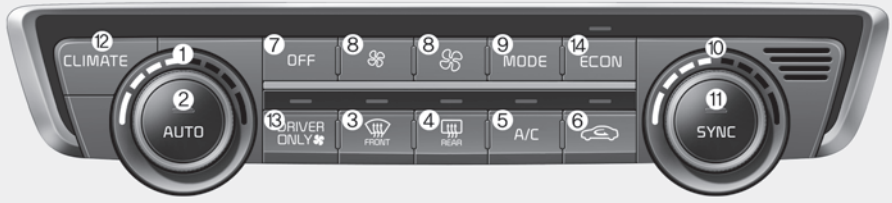

1. Driver's temperature control knob
2. AUTO (automatic control) button
3. Front windshield defroster button
4. Rear window defroster button
5. Air conditioning button
6. Air intake control button
7. OFF button
8. Fan speed control button
9. Mode selection button
10. Passenger's temperature control knob
11. Dual temperature control selection button
12. Climate information screen selection button
13. DRIVER ONLY button
14. ECON (Economy air conditioning) button

✻ NOTICE

Operating the blower when the ignition switch is in the ON position could cause the battery to discharge. Operate the blower when the engine is running.

OJFH045083L/OJFH045084L

Automatic heating and air conditioning

OJF045085

1. Press the AUTO button. The modes, fan speeds, air intake and air-conditioning will be controlled automatically by setting the temperature.

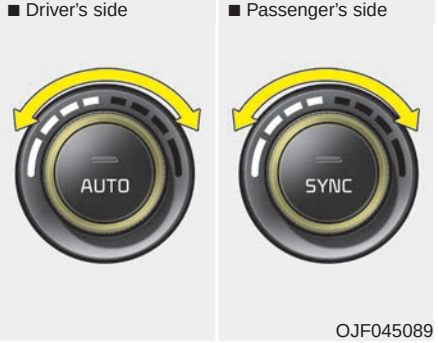

OJF045089

2. Turn the temperature control knob to the desired temperature.

✻ NOTICE

- **To turn the automatic operation off, select any button or switch of the following:**
  - **Mode selection button**
  - **Air conditioning button**
  - **Front windshield defroster button (Press the button one more time to deselect the front windshield defroster function. The 'AUTO' sign will illuminate on the information display once again.)**
  - **Air intake control button**
  - **Fan speed control switch**

  The selected function will be controlled manually while other functions operate automatically.
- **For your convenience and to improve the effectiveness of the climate control, use the AUTO button and set the temperature to 23°C (73°F).**

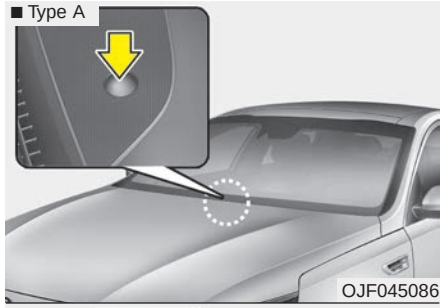

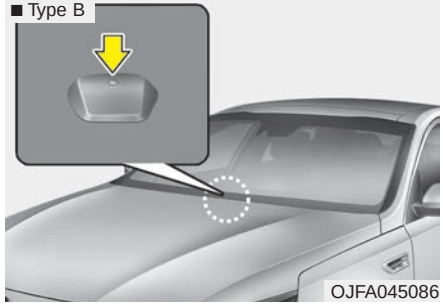

✻ NOTICE

Never place anything over the sensor located on the instrument panel to ensure better control of the heating and cooling system.

Manual heating and air conditioning

The heating and cooling system can be controlled manually by pressing buttons or turning knob(s) other than the AUTO button. In this case, the system works sequentially according to the order of buttons or knob(s) selected.

1. Start the engine.
2. Set the mode to the desired position.

   For improving the effectiveness of heating and cooling;

   - Heating:
   - Cooling:
3. Set the temperature control to the desired position.
4. Set the air intake control to the outside (fresh) air position.
5. Set the fan speed control to the desired speed.
6. If air conditioning is desired, turn the air conditioning system on.

Press the AUTO button in order to convert to full automatic control of the system.

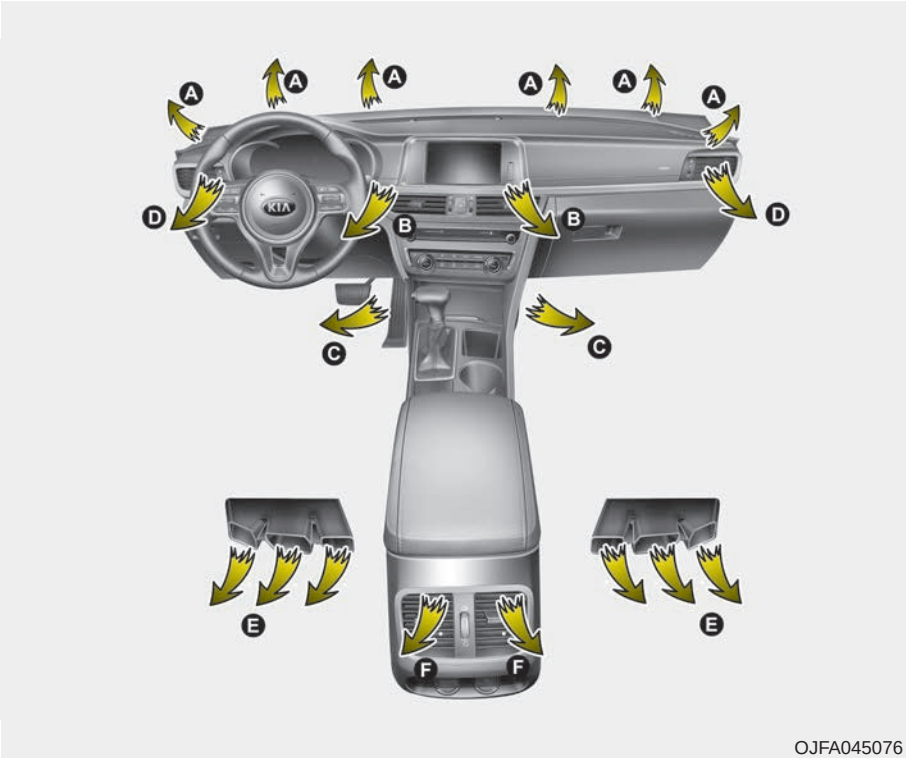

OJFA045076

Mode selection

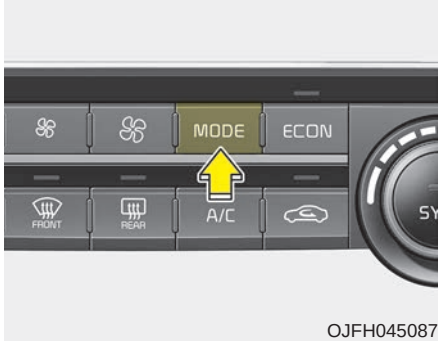

OJFH045087

The mode selection button controls the direction of the air flow through the ventilation system.

The air flow outlet port is converted as follows:

Face-Level (B, D)

Air flow is directed toward the upper body and face. Additionally, each outlet can be controlled to direct the air discharged from the outlet.

Bi-Level (B, C, D, E, F)

Air flow is directed towards the face and the floor.

Floor-Level (A, C, D, E, F)

Most of the air flow is directed to the floor, with a small amount of the air being directed to the windshield and side window defrosters.

Floor/Defrost-Level (A, C, D, E, F)

Most of the air flow is directed to the floor and the windshield with a small amount directed to the side window defrosters.

✻ NOTICE - 2nd row outlet vents (E,F)

- **The air flow of the 2nd row outlet vents is controlled by the front climate control system and delivered through the inside air duct of the floor (E, F).**
- **The air flow of the 2nd row outlet vents (E, F) may be weaker than the instrument panel vents for the long air duct.**

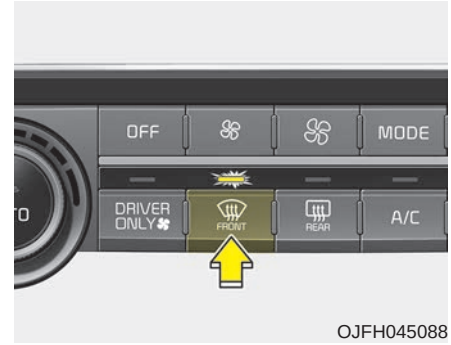

Defrost-Level (A, D)

Most of the air flow is directed to the windshield with a small amount of air directed to the side window defrosters.

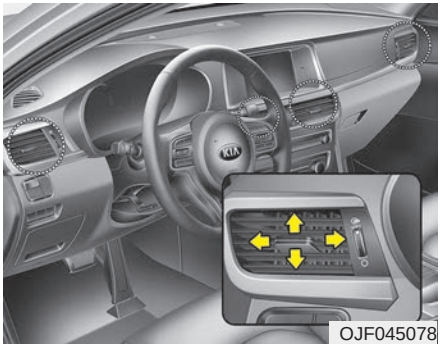

Instrument panel vents

The outlet vents can be opened or closed separately using the thumb-wheel (if equipped).

Also, you can adjust the direction of air delivery from these vents using the vent control lever as shown.

Temperature control

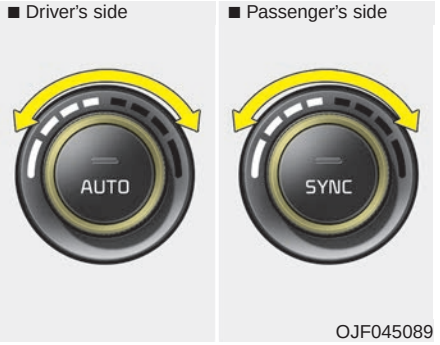

The temperature will increase to the maximum (HI) by turning the knob to the extreme right.

The temperature will decrease to the minimum (Lo) by turning the knob to the extreme left.

When turning the knob, the temperature will increase or decrease by 0.5°C/1°F. When set to the lowest temperature setting, the air conditioning will operate continuously.

Adjusting the driver and passenger side temperature equally

- Press the "SYNC" button to adjust the driver and passenger side temperature equally.

  The passenger side temperature will be set to the same temperature as the driver side temperature.
- Turn the driver side temperature control knob. The driver and passenger side temperature will be adjusted equally.

Adjusting the driver and passenger side temperature individually

- Press the “SYNC” button again to adjust the driver and passenger side temperature individually. The illumination of button turns off.
- Operate the driver side temperature control knob to adjust the driver side temperature.
- Operate the passenger side temperature control knob to adjust the passenger side temperature.

Temperature conversion

You can switch the temperature mode from Centigrade to Fahrenheit as follows:

While pressing the OFF button, press the AUTO button for 3 seconds or more.

The display will change from Centigrade to Fahrenheit, or from Fahrenheit to Centigrade.

If the battery has been discharged or disconnected, the temperature mode display will reset to Fahrenheit.

Air intake control

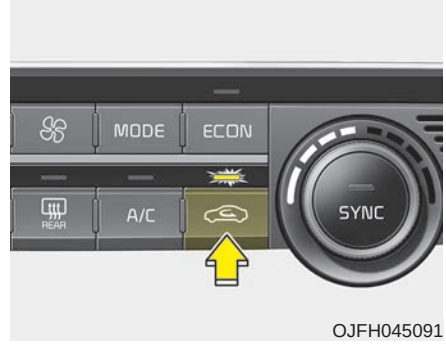

OJFH045091

This is used to select the outside (fresh) air position or recirculated air position.

To change the air intake control position, push the control button.

Outside (fresh) air position

With the outside (fresh) air position selected, air enters the vehicle from outside and is heated or cooled according to the function selected.

Recirculated air position

With the recirculated air position selected, air from the passenger compartment will be drawn through the heating system and heated or cooled according to the function selected.

Prolonged operation of the heater in the recirculated air position (without air conditioning selected) may cause fogging of the windshield and side windows and the air within the passenger compartment may become stale.

In addition, prolonged use of the air conditioning with the recirculated air position selected will result in dry air in the passenger compartment.

Sunroof inside air recirculation (if equipped)

If the sunroof opens while the heater or Air Conditioning system operates, the outside (fresh) air will be selected automatically for ventilating the car. Then, if you select the recirculated air position, the outside (fresh) air will be selected automatically after 3 minutes.

If you close the sunroof, the intake mode will be changed to the previous selected mode.

Fan speed control

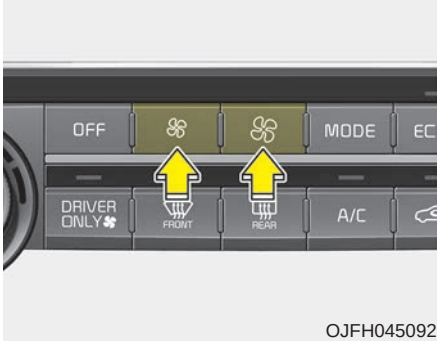

OJFH045092

The fan speed can be set to the desired speed by operating the fan speed control button.

To change the fan speed, press (✤) the button for higher speed, or push (✤) the button for lower speed. To turn the fan speed control off, press the front blower OFF button.

Air conditioning

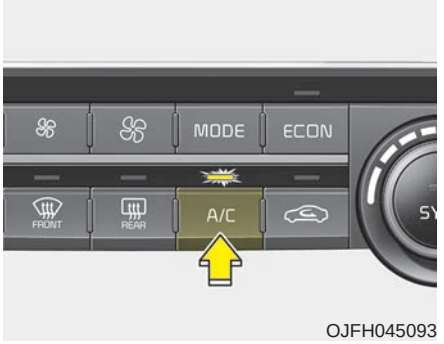

OJFH045093

Press the A/C button to turn the air conditioning system on (indicator light will illuminate).

Press the button again to turn the air conditioning system off.

⚠ WARNING - Reduced Visibility

Continuous use of the climate control system in the recirculated air position may allow humidity to increase inside the vehicle which may fog the glass and obscure visibility.

⚠ WARNING - Recirculated Air

Continued use of the climate control system in the recirculated air position can cause drowsiness or sleepiness, and loss of vehicle control. Set the air intake control to the outside (fresh) air position as much as possible while driving.

⚠ WARNING - Sleeping with A/C on

Do not sleep in a vehicle with the air conditioning or heating on as this may cause serious harm or death due to a drop in the oxygen level and/or body temperature.

OFF mode

OJFH045094

Press the front blower OFF button to turn off the front air climate control system. However, you can still operate the mode and air intake buttons as long as the ignition switch is in the ON position.

Climate information screen selection (if equipped)

OJFH045095

Press the climate information screen selection button to display climate information on the screen.

Driver Only

OJFH045371

If you press the DRIVER ONLY button( ) and the indicator light illuminates, cold air mostly blows in the direction of the driver's seat. However, some of the cold air may come out of other seats' ducts to keep indoor air pleasant.

If you use the button with no passenger in the front passenger seat, energy consumption will be reduced.

Economy air conditioning button (ECON)

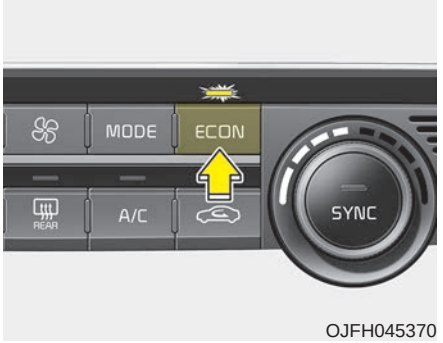

OJFH045370

If you push the ECON button while the air conditioning system is working, the air conditioning system will work less and may improve fuel efficiency.

If you want maximum air conditioning turn the ECON system off by pushing the ECON button.

Automatic Ventilation (if equipped)

When the ignition is ON or when the engine is running and the outside temperature is below 15°C (59°F), the automatic ventilation feature will activate if the recirculated air intake position is selected for more than 5 minutes while A/C is off and floor mode is selected. In this condition the air intake position will automatically switch to the outside (fresh) air intake position.

To cancel or reset the Automatic Ventilation

When the air conditioning system is on, select Face Level mode and keep pressing the air intake control button more than 3 seconds.

When the automatic ventilation is canceled, the indicator blinks 3 times. When the automatic ventilation is activated, the indicator blinks 6 times.

System operation

Ventilation

1. Set the mode to the position.
2. Set the air intake control to the outside (fresh) air position.
3. Set the temperature control to the desired position.
4. Set the fan speed control to the desired speed.

Heating

1. Set the mode to the position.
2. Set the air intake control to the outside (fresh) air position.
3. Set the temperature control to the desired position.
4. Set the fan speed control to the desired speed.
5. If dehumidified heating is desired, turn the air conditioning system (if equipped) on.

- If the windshield fogs up, set the mode to the or position.

Operation Tips

- To keep dust or unpleasant fumes from entering the vehicle through the ventilation system, temporarily set the air intake control to the recirculated air position. Be sure to return the control to the fresh air position when the irritation has passed to keep fresh air in the vehicle. This will help keep the driver more alert and comfortable.
- Air for the heating/cooling system is drawn in through the grilles just ahead of the windshield. Care should be taken that these are not blocked by leaves, snow, ice or other obstructions.
- To prevent interior fog on the windshield, set the air intake control to the fresh air position and fan speed to the desired position, turn on the air conditioning system, and adjust the temperature control to desired temperature.

Air conditioning (if equipped)

All Kia Air Conditioning Systems are filled with R-1234yf refrigerant.

1. Start the hybrid system. Press the air conditioning button.
2. Set the mode to the position.
3. Set the air intake control to the outside air or recirculated air position.
4. Adjust the fan speed control and temperature control to maintain maximum comfort.

- When maximum cooling is desired, set the temperature control to the extreme left position, set the mode control to the MAX A/C position, then set the fan speed control to the highest speed.

⚠ **CAUTION - Excessive A/C Use**

When using the air conditioning system, monitor the temperature gauge closely while driving up hills or in heavy traffic when outside temperatures are high. Air conditioning system operation may cause engine overheating. Continue to use the blower fan but turn the air conditioning system off if the temperature gauge indicates engine overheating.

⚠ **CAUTION**

When opening the windows in humid weather, air conditioning may create water droplets inside the vehicle. Since excessive water droplets may cause damage to electrical equipment, air conditioning should only be used with the windows closed.

Air conditioning system operation tips

- If the vehicle has been parked in direct sunlight during hot weather, open the windows for a short time to let the hot air inside the vehicle escape.
- To help reduce moisture inside of the windows on rainy or humid days, decrease the humidity inside the vehicle by operating the air conditioning system.
- During air conditioning system operation, you may occasionally notice a slight change in engine speed as the air conditioning compressor cycles. This is a normal system operation characteristic.
- Use the air conditioning system every month only for at least a few minutes to ensure maximum system performance.
- When using the air conditioning system, you may notice clear water dripping (or even puddling) on the ground under the passenger side of the vehicle. This is a normal system operation characteristic.
- Operating the air conditioning system in the recirculated air position provides maximum cooling, however, continual operation in this mode may cause the air inside the vehicle to become stale.
- During cooling operation, you may occasionally notice a misty air flow because of rapid cooling and humid air intake. This is a normal system operation characteristic.

Climate control air filter (if equipped)

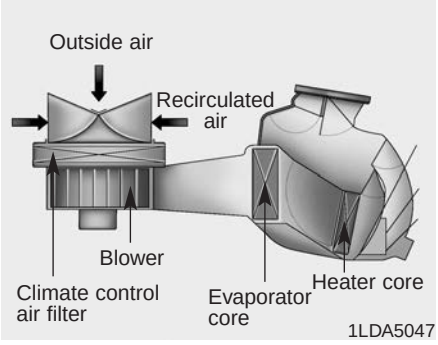

The climate control air filter installed behind the glove box filters the dust or other pollutants that come into the vehicle from the outside through the heating and air conditioning system. If dust or other pollutants accumulate in the filter over a period of time, the air flow from the air vents may decrease, resulting in moisture accumulation on the inside of the windshield even when the outside (fresh) air position is selected. If this happens, have the climate control air filter replaced by an authorized Kia dealer.

✻ NOTICE

- **Replace the filter according to the Maintenance Schedule.**
  If the vehicle is being driven in severe conditions such as dusty or rough roads, more frequent climate control air filter inspections and changes are required.
- **When the air flow rate suddenly decreases, the system should be checked at an authorized Kia dealer.**

Checking the amount of air conditioner refrigerant and compressor lubricant

When the amount of refrigerant is low, the performance of the air conditioning is reduced. Overfilling also has a negative impact on the air conditioning system.

Therefore, if abnormal operation is found, have the system inspected by an authorized Kia dealer.

⚠ WARNING

The oil and refrigerant in your vehicle's air conditioning system is under very high pressure. If proper service procedures are not followed, an explosion may result. To reduce the risk of serious injury or death, the air conditioning system in your vehicle should only be serviced by trained and certified technicians.

⚠ CAUTION

It is important that the correct type and amount of oil and refrigerant is used, otherwise damage to the vehicle may occur. To prevent damage, the air conditioning system in your vehicle should only be serviced by trained and certified technicians.

WINDSHIELD DEFROSTING AND DEFOGGING

⚠ WARNING - Windshield heating

Do not use the or position during cooling operation in extremely humid weather. The difference between the temperature of the outside air and the windshield could cause the outer surface of the windshield to fog up, causing loss of visibility. In this case, set the mode selection to the position and fan speed control to the lower speed.

- For maximum defrosting, set the temperature control to the extreme right/hot position and the fan speed control to the highest speed.
- If warm air to the floor is desired while defrosting or defogging, set the mode to the floor-defrost position.
- Before driving, clear all snow and ice from the windshield, rear window, outside rear view mirrors, and all side windows.
- Clear all snow and ice from the hood and air inlet in the cowl grill to improve heater and defroster efficiency and to reduce the probability of fogging up the inside of the windshield.

Automatic climate control system

To defog inside windshield

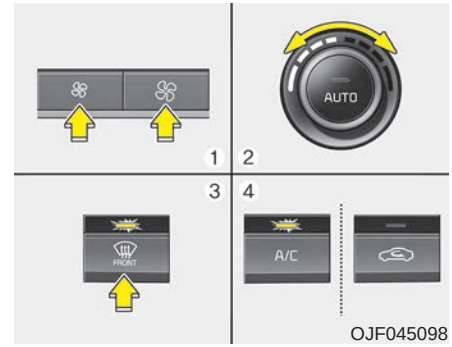

1. Set the fan speed to the desired position.
2. Select desired temperature.
3. Press the defroster button ( ).
4. The outside (fresh) air position will be selected automatically and the air conditioning will turn on according to the detected ambient temperature.

If the air conditioning and outside (fresh) air position are not selected automatically, adjust the corresponding button manually. If the position is selected, lower fan speed is adjusted to a higher fan speed.

To defrost outside windshield

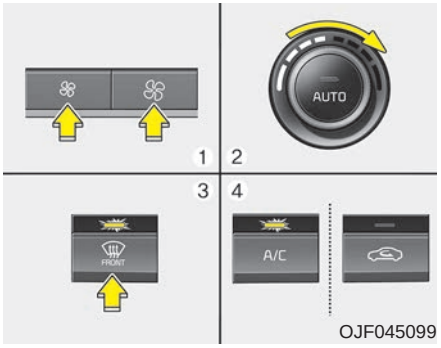

1. Set the fan speed to the highest position.
2. Set the temperature to the maximum hot (HI) position.
3. Press the defroster button ( ).
4. The outside (fresh) air position will be selected automatically and the air conditioning will turn on according to the detected ambient temperature.

Defogging logic

To reduce the possibility of fogging up the inside of the windshield, the air intake or air conditioning is controlled automatically according to certain conditions such as or position. To cancel automatic defogging logic or return to the automatic defogging logic, do the following.

Automatic climate control system

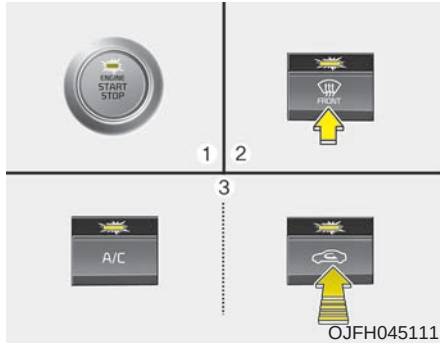

OJFH045111

1. Turn the ignition switch to the ON position.
2. Press the defroster button ( ).
3. While pressing the air conditioning button (A/C), press the air intake control button at least 5 times within 3 seconds.

The recirculation indicator blinks 3 times with 0.5 second of interval. It indicates that the defogging logic is canceled or returned to the programmed status.

If the battery has been discharged or disconnected, it resets to the defog logic status.

Auto defogging system (if equipped)

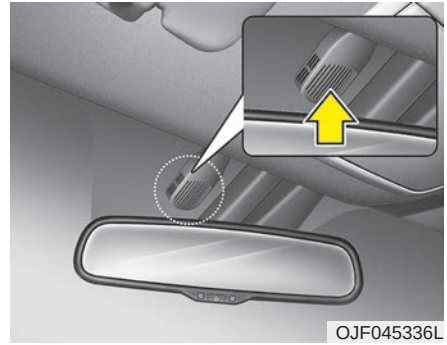
OJF045336L

Auto defogging reduces the probability of fogging up the inside of the windshield by automatically sensing the moisture of inside the windshield.

The auto defogging system operates when the heater or air conditioning is on.

This indicator illuminates when the auto defogging system senses the moisture on the inside of the windshield and operates.

The auto defogging system addresses excess moisture on the inside of the windshield in stages.

For example if auto defogging does not defog inside the windshield at step 1 Outside air position, it tries to defog again at step 2 Operating the air conditioning.

Step 1 : Outside air position

Step 2 : Operating the air conditioning

Step 3 : Blowing air flow toward the windshield

Step 4 : Increasing air flow toward the windshield

To cancel or reset the Auto Defogging System

Press the front windshield defroster button for 3 seconds when the ignition switch is in the ON position. When the Auto Defogging System is canceled, ADS OFF symbol will blink 3 times and the ADS OFF will be displayed on the climate control information screen.

When the Auto Defogging System is reset, ADS OFF symbol will blink 6 times without a signal.

⚠ CAUTION

Do not remove the sensor cover located on the upper end of the passenger side windshield glass. Damage to the system parts could occur and may not be covered by your vehicle warranty.

CLEAN AIR

OJF045335L

When the ignition switch is in the ON position, the clean air function turns on automatically.

Also, the clean air function turns off automatically, when the ignition switch turns to the OFF position.

STORAGE COMPARTMENTS

These compartments can be used to store small items required by the driver or passengers.

- To avoid possible theft, do not leave valuables in the storage compartment.
- Always keep the storage compartment covers closed while driving. Do not attempt to place so many items in the storage compartment that the storage compartment cover can not close securely.

⚠ WARNING - Flammable materials

Do not store, propane cylinders or other flammable/explosive materials in the vehicle. These items may catch fire and/or explode if the vehicle is exposed to hot temperatures for extended periods.

Center console storage

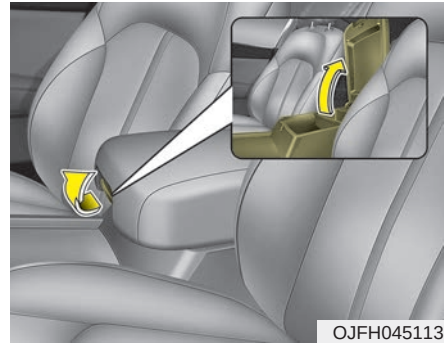

To open the center console storage, pull up the lever.

Glove box

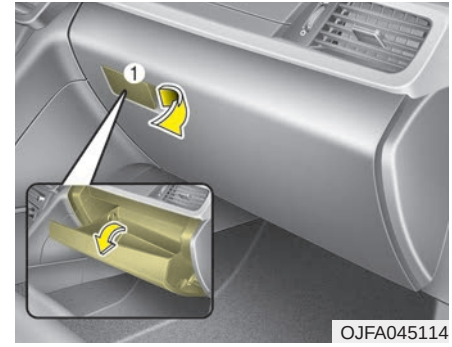

The glove box can be locked and unlocked with a master key. (if equipped)

To open the glove box, pull the lever (1) and the glove box will automatically open. Close the glove box after use.

⚠ WARNING - Glove Box

To reduce the risk of injury in an accident or sudden stop, always keep the glove box door closed while driving.

✻ NOTICE

If the temperature control knob is in the warm or hot position, warm or hot air will flow into the glove box.

Sunglass holder

To open the sunglass holder, press the cover and the holder will slowly open. Place your sunglasses with the lenses facing out.

To close the sunglass holder push it up.

⚠ WARNING - Sunglass holder

Do not keep objects except sunglasses inside the sunglass holder. Heavier objects can be thrown from the holder in the event of a sudden stop or an accident, possibly injuring the passengers.

INTERIOR FEATURES

Cup holder

⚠ WARNING - Hot liquids

Do not place uncovered cups with hot liquid in the cup holder while the vehicle is in motion. If the hot liquid spills, you may burn yourself. Such a burn to the driver could lead to loss of control of the vehicle.

⚠ CAUTION

Keep your drinks sealed while driving to prevent spilling your drink. If liquid spills, it may get into the vehicle's electrical/electronic system and damage electrical/electronic parts.

✻ NOTICE

When cleaning spilled liquids, do not use heat to dry the cup holders. This may damage the cup holder.

■ Front seat

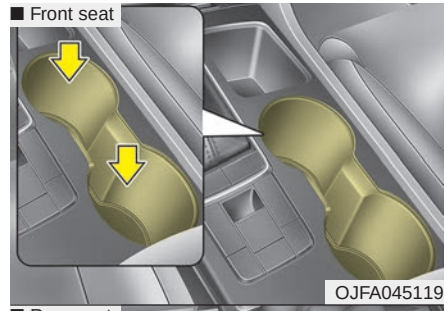

■ Rear seat

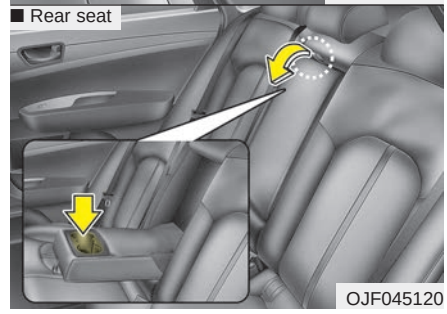

Cups or small beverage cans may be placed in the cup holders.

Bottle holder

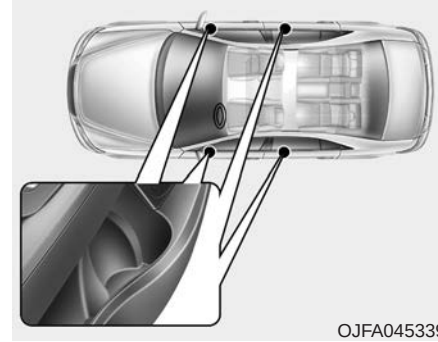

Bottles may be placed in the holder.

✻ NOTICE

Only bottles should be placed in the holder labeled "Bottles Only".

Seat warmer (if equipped)

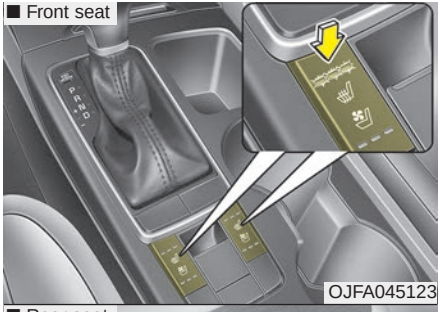

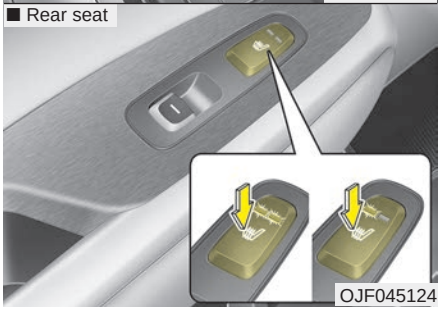

The seat warmer is provided to warm the front seats during cold weather. With the ignition switch in the ON position, push either of the switches to warm the driver's seat or the front passenger's seat.

During mild weather or under conditions where the operation of the seat warmer is not needed, keep the switches in the “OFF” position.

- Each time you press the switch, the temperature setting of the seat will change as follows :

■ Front seat

OFF→HIGH( )→MIDDLE( )→LOW( )

■ Rear seat

OFF→HIGH( )→LOW( )

- The seat warmer defaults to the OFF position whenever the ignition switch is turned on.

✻ NOTICE

With the seat warmer switch in the ON position, the heating system in the seat turns off or on automatically depending on the seat temperature.

⚠ WARNING - Seat warmer burns

The seat warmer may cause burns, even at low temperatures, if used over a long period of time. Never allow passengers who may not be able to take care of themselves to be exposed to the risk of seat heater burns. These include:

1. **Infants, children, elderly or disabled persons, or hospital outpatients**
2. **Persons with sensitive skin or those that burn easily**
3. **Fatigued individuals**
4. **Intoxicated individuals**
5. **Individuals taking medication that can cause drowsiness or sleepiness (sleeping pills, cold tablets, etc.)**

Air ventilation seat (if equipped)

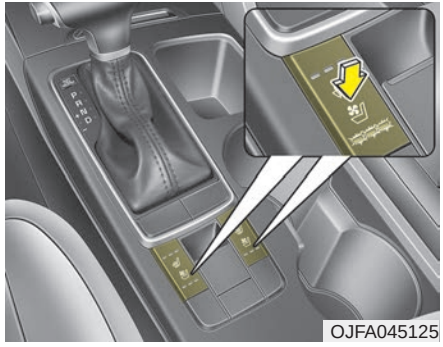

The temperature setting of the seat changes according to the switch position.

- If you want to ventilate your seat cushion, press the switch (blue color).
- Each time you press the button, the airflow will change as follows:

OFF→HIGH( )→MIDDLE( )→LOW( )

- The seat warmer (with air ventilation) defaults to the OFF position whenever the ignition switch is turned on.

⚠ CAUTION - Seat damage

- ***When cleaning the seats, do not use an organic solvent such as paint thinner, benzene, alcohol and gasoline. Doing so may damage the air ventilation seat.***
- ***Do not place heavy or sharp objects on the seat. Those things may damage the air ventilation seat.***
- ***Be careful not to spill liquid such as water or beverages on the seat. If you spill some liquid, wipe the seat with a dry towel. Before using the air ventilation seat, dry the seat completely.***

Sunvisor

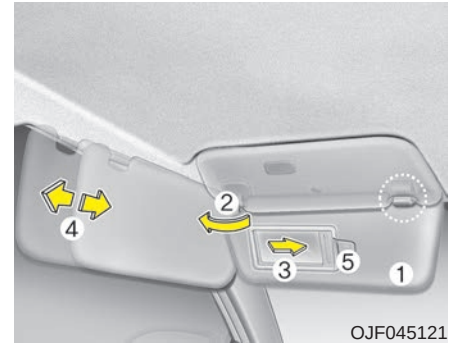

Use the sunvisor to shield direct light through the front or side windows.

To use the sunvisor, pull it downward.

To use the sunvisor for the side window, pull it downward, unsnap it from the bracket (1) and swing it to the side (2).

To use the vanity mirror, pull down the visor and slide the mirror cover (3).

Adjust the sunvisor extension forward or backward (4).

The ticket holder (5) is provided for holding a tollgate ticket.

* The actual sunvisor lamp in the vehicle may differ from the illustration.

⚠ CAUTION - Vanity mirror lamp

If you use the vanity mirror lamp, turn off the lamp before returning the sunvisor to its original position, otherwise it could result in battery discharge and possible sunvisor damage.

Power outlet (if equipped)

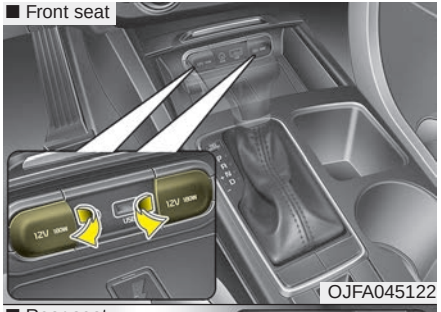

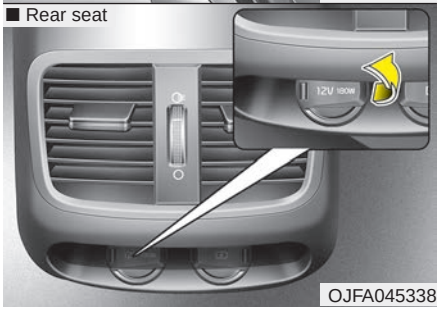

The power outlet is designed to provide power for mobile telephones or other devices designed to operate with vehicle electrical systems. The devices should draw less than 10 amps with the engine running.

- Use the power outlet only when the engine is running and remove the accessory plug after use. Using the accessory plug for prolonged periods of time with the engine off could cause the battery to discharge.
- Only use 12V electric accessories which are less than 10A in electric capacity.
- Adjust the air-conditioner or heater to the lowest operating level when using the power outlet.
- Close the cover when not in use.
- Some electronic devices can cause electronic interference when plugged into a vehicle's power outlet. These devices may cause excessive audio static and malfunctions in other electronic systems or devices used in your vehicle.
- Push the plug in as far as it will go. If good contact is not made, the plug may overheat and the fuse may open.

- Plug in battery equipped electronic devices with reverse current protection. The current from the battery may flow into the vehicle's electri cal/electronic system and cause system malfunction.

⚠ WARNING - Electric shock

Do not put a finger or a foreign object (pen, etc.) into a power outlet and do not touch with a wet hand. You may receive an electric shock.

USB charger

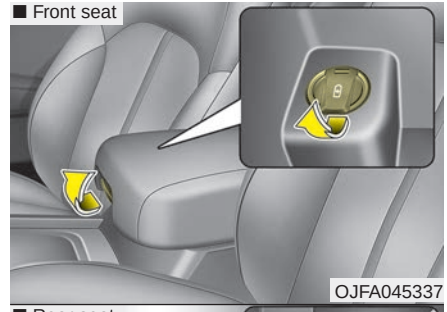

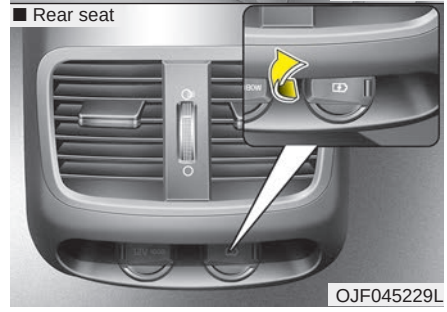

The USB charger is designed to recharge batteries of small size electrical devices using a USB cable. The electrical devices can be recharged when the Engine Start/Stop button is in ACC/ON/START position.

The battery charging state may be monitored on the electrical device.

Disconnect the USB cable from the USB port after use.

- Some devices are not supported for fast charging but will be charged with normal speed.
- Use the USB charger when the engine is running to prevent battery discharge.
- Only devices that fit the USB port can be used.
- The USB charger can be used only for battery charging purposes.
- Battery chargers cannot be charged.

Wireless smart phone charging system (if equipped)

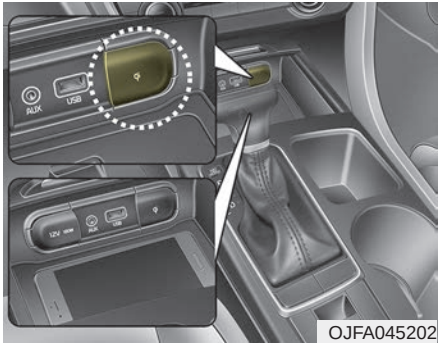

OJFA045202

A wireless smart phone charging system located in front of the center console

Firmly close all doors, and turn the ignition to ACC or IGN ON. To start wireless charging, place the smart phone equipped with wireless charging function on the wireless charging pad.

For best wireless charging results, place the smart phone on the center of the charging pad.

The wireless charging system is designed for one smart phone equipped with QI per single usage only. Please refer to the smart phone accessory cover or the smart phone manufacturer homepage to check whether your smart phone supports QI function.

Wireless smart phone charging

1. Remove any object on the smart phone charging pad including the smart key. If there is any foreign object on the pad other than a smart phone, the wireless charging function may not operate properly.
2. Place the smart phone on the center of the wireless charging pad.
3. The indicator light will change to orange once the wireless charging begins. After the charging is complete, the orange light will change to green.
4. You can choose to turn the wireless charging function to either ON or OFF by selecting the “User Settings Mode” on the instrument cluster. (Please refer to “Instrument Cluster” for details).

If the wireless charging does not work, gently move your smart phone around the pad until the charging indicator light turns yellow. Depending on the smart phone, the charging indicator light may not turn green even after the charging is complete.

If the wireless charging is not functioning properly, the orange light will blink and flash for ten seconds then turn off. In such cases, remove the smart phone from the pad and replace it on the pad again, or double check the charging status.

If you leave the smart phone on the charging pad when the vehicle ignition is in OFF, the vehicle will alert you through warning messages and sound (applicable for vehicles with voice guidance function) after the 'Good bye' function on the instrument cluster ends.

⚠ WARNING - Distracted driving

Driving while distracted can result in a loss of vehicle control that may lead to an accident, severe personal injury, and death. The driver's primary responsibility is in the safe and legal operation of a vehicle, and use of any handheld devices, other equipment, or vehicle systems which take the driver's eyes, attention and focus away from the safe operation of a vehicle or which are not permissible by law should never be used during operation of the vehicle.

⚠ CAUTION - Liquid in Wireless Smart Phone Charger

To prevent liquid from damaging the wireless smart phone charging system in your vehicle, securely close the tray cover when charging your phone.

⚠ WARNING - Metal in Wireless Charging System

If any metallic object such as a coin is located between the wireless charging system and the smart phone, the charging may be disrupted. Also, the metallic object may heat up and potentially damage the charging system. If there is any metallic object between the smart phone and the charging pad, immediately remove the smart phone. Remove the metallic object after it has cooled down.

✻ NOTICE

- **If it is not possible to close the tray cover due to the size of your smart phone or because the tray cover has been broken, do not use the wireless smart phone charging function.**
- **When the interior temperature of the wireless charging system rises above a set temperature, the wireless charging will cease to function. After the interior temperature drops below the threshold, the wireless charging function will resume.**
- **The wireless charging may not function properly when there is a heavy accessory cover on the smart phone.**
- **The wireless charging will stop when using the wireless smart key search function to prevent radio wave disruption.**
- **The wireless charging will stop when the smart key is moved out of the vehicle with the ignition in ON.**

(Continued)

(Continued)

- **The wireless charging will stop when any of the doors is opened (applicable for vehicles equipped with smart keys).**
- **The wireless charging will stop when the vehicle is turned OFF.**
- **The wireless charging will stop when the smart phone is not in complete contact with the wireless charging pad.**
- **Items equipped with magnetic components such as a credit card, telephone card, bankbook, or any transportation ticket may become damaged during wireless charging.**
- **Place the smart phone on the center of the charge pad for best results. The smart phone may not charge when placed near the rim of the charging pad. When the smart phone does get charged, it may heat up excessively.**
- **For smart phones without built-in wireless charging system, an appropriate accessory has to be equipped in order to use the vehicle's wireless charging system.**

(Continued)

(Continued)

- **Smart phones of some manufacturers may display messages on weak current. This is due to the particular characteristic of the smart phone and does not imply a malfunction should be wireless charging function.**
- **The indicator light of some manufacturers' smart phones may still be yellow after the smart phone is fully charged. This is due to the particular characteristic of the smart phone and not a malfunction of the wireless charging function.**
- **When any smart phone without a wireless charging function or a metallic object is placed on the charging pad, a small noise may sound. This small sound is due to the vehicle discerning compatibility of the object placed on the charging pad. It does not affect your vehicle or the smart phone in any way.**

This device complies with Industry Canada licence-exempt RSS standard(s).

Operation is subject to the following two conditions:

(1) This device may not cause interference, and

(2) This device must accept any interference, including interference that may cause undesired operation of the device.

Coat hook (if equipped)

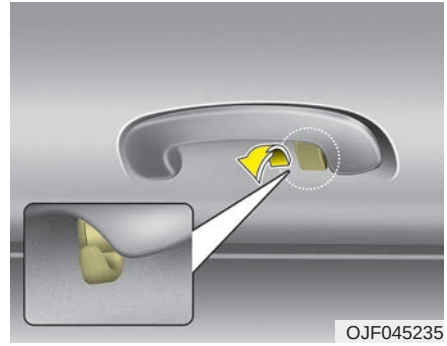

❊ This actual feature may differ from the illustration.

To use the coat hook, pull down the upper portion of coat hook.

⚠ CAUTION - Hanging clothing

Do not hang heavy clothes, since they may damage the hook.

⚠ WARNING

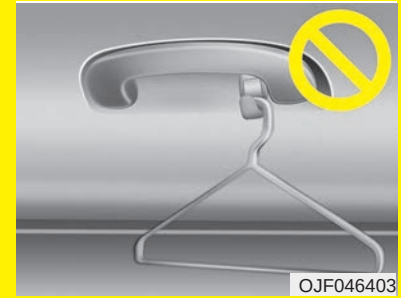

Do not hang other objects such as hangers or hard objects except clothes. Also, do not put heavy, sharp or breakable objects in the clothing's pockets. In an accident or when the curtain air bag is inflated, it may cause vehicle damage or personal injury.

Floor mat anchor(s) (if equipped)

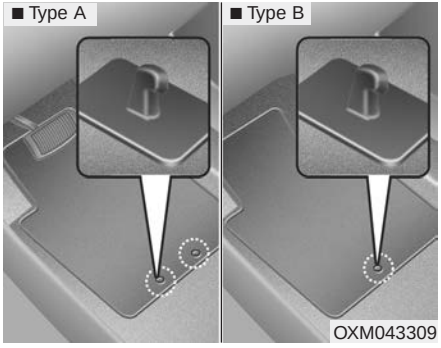

When using a floor mat on the front floor carpet, make sure it attaches to the floor mat anchor(s) in your vehicle. This keeps the floor mat from sliding forward.

⚠ WARNING - Aftermarket floor mat

Do not install aftermarket floor mats that are not capable of being securely attached to the vehicle's floor mat anchors.

Unsecured floor mats can interfere with pedal operation.

The following must be observed when installing ANY floor mat to the vehicle.

- Ensure that the floor mats are securely attached to the vehicle's floor mat anchor(s) before driving the vehicle.
- Do not use ANY floor mat that cannot be firmly attached to the vehicle's floor mat anchors.
- Do not stack floor mats on top of one another (e.g. all-weather rubber mat on top of a carpeted floor mat). Only a single floor mat should be installed in each position.

✻ NOTICE

Your vehicle was manufactured with driver's side floor mat anchors that are designed to securely hold the floor mat in place. To avoid any interference with pedal operation, Kia recommends that only the Kia floor mat designed for use in your vehicle be installed.

Side curtain (if equipped)

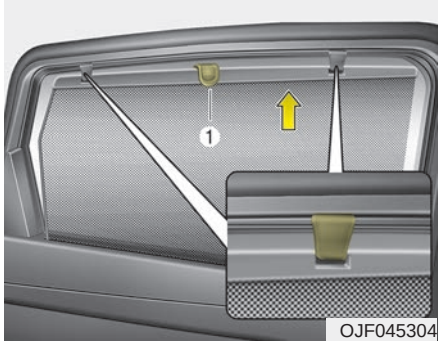

To use the side curtain:

1. Lift the curtain by the handle (1).
2. Hang the curtain on the hooks on both sides of the handle.

To avoid injury or damage to the side curtain and door moldings, lower side curtain by the handle all the way back to the stowed position. Do not release handle after disengaging from the hooks on the door.

Audio system

Audio System 5-2
- **Antenna** 5-2
- **How vehicle audio works** 5-3

Declaration of Conformity 5-6
- **IC** 5-6

AUDIO SYSTEM

✻ NOTICE

If you install an aftermarket HID head lamp, your vehicle's audio and electronic device may malfunction.

Antenna

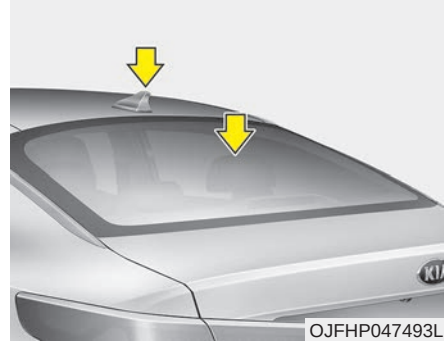

Glass antenna (if equipped)

When the radio power switch is turned on while the ignition switch is in either the "ON" or "ACC" position, your car will receive both AM and FM broadcast signals through the antenna in the rear window glass.

Shark fin antenna (if equipped)

The shark fin antenna will receive the transmitted data.

⚠ CAUTION

- ***Do not clean the inside of the rear window glass with a cleaner or use a scraper to remove foreign deposits as this may cause damage to the antenna elements.***
- ***Avoid adding metallic coatings such as Ni, Cd, and so on. These can disturb receiving AM and FM broadcast signals.***
- ***To prevent damage to the rear glass antenna, never use sharp instruments or window cleaners containing abrasives to clean the window. Clean the inside surface of the rear glass window with a piece of soft cloth.***

(Continued)

(Continued)

- ***When putting a sticker on the inside surface of the rear window, be careful not to damage the rear glass antenna.***
- ***Do not put sharp instruments near the rear glass antenna.***

✻ NOTICE

Tinted rear window may affect the proper functioning of the antenna.

How Vehicle Eadio Works

FM reception

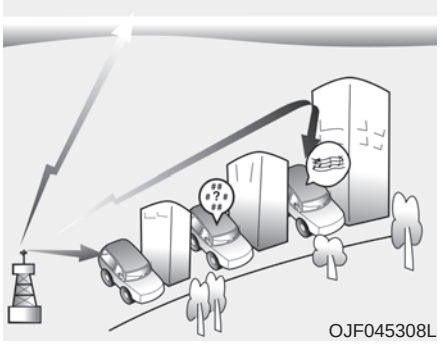

AM and FM radio signals are broadcast from transmitter towers located around your city. They are intercepted by the radio antenna on your vehicle. This signal is then processed by the radio and sent to your vehicle speakers.

However, in some cases the signal coming to your vehicle may not be strong and clear.

This can be due to factors such as the distance from the radio station, closeness of other strong radio stations or the presence of buildings, bridges or other large obstructions in the area.

AM reception

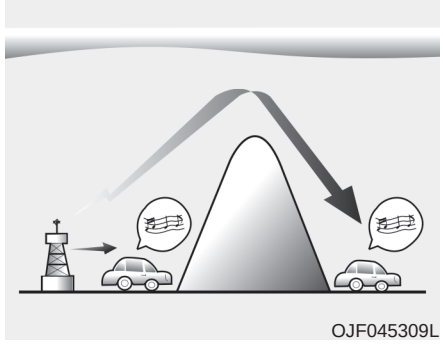

AM broadcasts can be received at greater distances than FM broadcasts. This is because AM radio waves are transmitted at low frequencies. These long distance,low frequency radio waves can follow the curvature of the earth rather than travelling straight. In addition, they curve around obstructions resulting in better signal coverage.

FM radio station

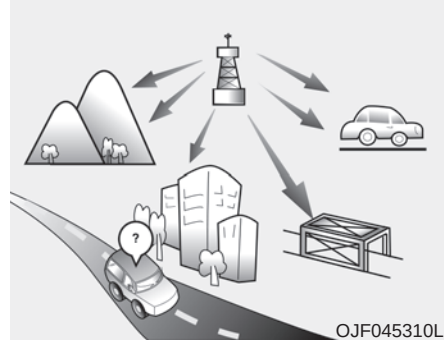

FM broadcasts are transmitted at high frequencies and do not bend to follow the earth's surface. Because of this, FM broadcasts generally begin to fade within short distances from the station. Also, FM signals are easily affected by buildings, mountains, and obstructions. This can lead to undesirable or unpleasant listening conditions which might lead you to believe a problem exists with your radio. The following conditions are normal and do not indicate radio trouble:

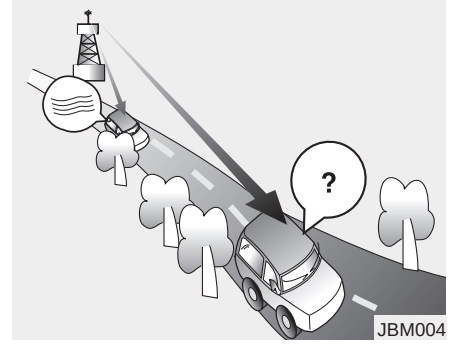

- Fading - As your vehicle moves away from the radio station, the signal will weaken and sound will begin to fade. When this occurs, we suggest that you select another station with a stronger signal.
- Flutter/Static - Weak FM signals or large obstructions between the transmitter and your radio can disturb the signal causing static or fluttering noises to occur. Reducing the treble level may lessen this effect until the disturbance clears.

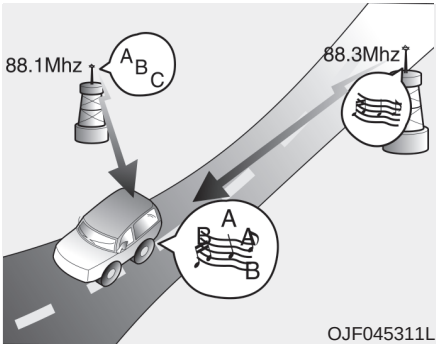

- Station Swapping - As an FM signal weakens, another more powerful signal near the same frequency may begin to play. This is because your radio is designed to lock onto the clearest signal. If this occurs, select another station with a stronger signal.
- Multi-Path Cancellation - Radio signals being received from several directions can cause distortion or fluttering. This can be caused by a direct and reflected signal from the same station, or by signals from two stations with close frequencies. If this occurs, select another station until the condition has passed.

Using a cellular phone or a two-way radio

When a cellular phone is used inside the vehicle, noise may be produced from the audio system. This does not mean that something is wrong with the audio equipment. In such a case, try to operate mobile devices as far from the audio equipment as possible.

When using a communication system such as a cellular phone or a radio set inside the vehicle, a separate external antenna must be fitted. When a cellular phone or a radio set is used with an internal antenna alone, it may interfere with the vehicle's electrical system and adversely affect safe operation of the vehicle.

⚠ WARNING - Cell phone use

Do not use a cellular phone while driving. Stop at a safe and legal location to use a cellular phone.

Declaration of Conformity

IC

This device complies with Industry Canada's licence-exempt RSSs.
Operation is subject to the following two conditions :
(1) This device may not cause interference; and
(2) This device must accept any interference, including interference that may cause undesired operation of the device.

Le présent appareil est conforme aux CNR d'Industrie Canada applicables aux appareils radio exempts de licence.
L'exploitation est autorisée aux deux conditions suivantes : (1) l'appareil ne doit pas produire de brouillage, et (2) l'utilisateur de l'appareil doit accepter tout brouillage radioélectrique subi, même si le brouillage est susceptible d'en compromettre le fonctionnement.

Driving your vehicle

Before driving 6-4
- Before entering vehicle 6-4
- Necessary inspections 6-4
- Before starting 6-4

Engine start/stop button 6-6
- Illuminated engine start/stop button 6-6
- Engine start/stop button position. 6-6
- Starting the hybrid system 6-8

Automatic transaxle 6-11
- Automatic transaxle operation. 6-11
- Good driving practices 6-17

Brake system. 6-18
- Power brakes 6-18
- Parking brake – Foot type 6-20
- Electronic Parking Brake (EPB) 6-21
- Auto hold 6-27
- Warning messages 6-30
- Anti-lock Brake System (ABS). 6-31
- Electronic Stability Control (ESC) 6-33
- Vehicle Stability Management (VSM). 6-37
- Hill-start Assist Control (HAC) 6-39
- Good braking practices. 6-39

Forward Collision-avoidance Assist (FCA) 6-41
- System setting and activation. 6-41
- FCA warning message and system control. 6-43
- Brake operation. 6-44
- FCA front radar/camera sensor 6-45
- System malfunction. 6-47
- Limitation of the system 6-50
- Recognizing pedestrians 6-54

Cruise control system. 6-56
- To set cruise control speed 6-57
- To increase cruise control set speed. 6-57
- To decrease the cruising speed. 6-58
- To temporarily accelerate with the cruise control on . 6-58
- To cancel cruise control 6-58
- To resume cruising speed at more than approximately 30 km/h (20 mph) 6-59
- To turn cruise control off 6-59

Smart Cruise Control with Stop & Go system . . 6-60
- Smart Cruise Control switch 6-62
- Smart Cruise Control speed. 6-62
- Vehicle to vehicle distance setting 6-67
- When there is a vehicle ahead of you in your lane. . 6-68
- To adjust the sensitivity of Smart Cruise Control . . 6-72
- To convert to cruise control mode 6-72
- Limitations of the system 6-73

Drive mode integrated control system 6-79
- Hybrid vehicle 6-79

Active ECO system. 6-81
• Plug-in hybrid vehicle 6-81
Blind-spot Collision Warning (BCW) 6-83
• BCW (Blind-Spot Collision Warning)/
LCA (Lane Change Assist). 6-84
• RCCW (Rear Cross-Traffic Collision Warning) . . . 6-87
• Driver's Attention 6-91
Lane Departure Warning (LDW) system. 6-94
• LDW operation 6-95
• Warning indicator 6-96
• The LDW does not operate when 6-97
Economical operation 6-99
Special driving conditions 6-101
• Hazardous driving conditions 6-101
• Rocking the vehicle 6-101
• Smooth cornering 6-102
• Driving at night 6-102
• Driving in the rain. 6-103
• Driving in flooded areas 6-104
• Driving off-road. 6-104
• Highway driving 6-104
Winter driving 6-105
• Snowy or icy conditions 6-105
• Use high quality ethylene glycol coolant 6-106
• Check battery and cables 6-106
• Change to "winter weight" oil if necessary 6-106
• Check spark plugs and ignition system. 6-106
• To keep locks from freezing 6-106
• Use approved window washer anti-freeze in system. 6-106
• Don’t let your parking brake freeze 6-107
• Don't let ice and snow accumulate underneath . . . 6-107
• Carry emergency equipment 6-107
Trailer Towing 6-107
Vehicle load limit 6-108
• Tire and loading information label 6-108
• Certification label 6-111
Vehicle weight 6-112
• Base curb weight 6-112
• Vehicle curb weight 6-112
• Cargo weight 6-112
• GAW (Gross Axle Weight) 6-112
• GAWR (Gross Axle Weight Rating) 6-112
• GVW (Gross Vehicle Weight). 6-112
• GVWR (Gross Vehicle Weight Rating) 6-112

Be sure the exhaust system does not leak.

The exhaust system should be checked whenever the vehicle is raised to change the oil or for any other purpose. If you hear a change in the sound of the exhaust or if you drive over something that strikes the underneath side of the vehicle, have the exhaust system checked as soon as possible by an authorized Kia dealer.

⚠ WARNING - Engine exhaust

Do not inhale exhaust fumes or leave your engine running in a enclosed area for a prolonged time. Exhaust fumes contain carbon monoxide, a colorless, odorless gas that can cause unconsciousness and death by asphyxiation.

⚠ WARNING - Open trunk

Do not drive with the trunk open. Poisonous exhaust gases can enter the passenger compartment. If you must drive with the trunk open proceed as follows:

1. **Close all windows.**
2. **Open side vents.**
3. **Set the air intake control at "Fresh", the air flow control at "Floor" or "Face" and the fan at the highest speed.**

BEFORE DRIVING

Before entering vehicle

- Be sure that all windows, outside mirror(s), and outside lights are clean.
- Check the condition of the tires.
- Check under the vehicle for any sign of leaks.
- Be sure there are no obstacles behind you if you intend to back up.

Necessary inspections

Fluid levels, such as engine oil, engine coolant, brake fluid, and washer fluid should be checked on a regular basis, at the exact interval depending on the fluid. Further details are provided in chapter 8, “Maintenance”.

⚠ WARNING - Distracted driving

Focus on the road while driving. The driver's primary responsibility is in the safe and legal operation of the vehicle. Use of any handled devices, other equipment or vehicle systems that distract the driver should not be used during vehicle operation.

Before starting

- Close and lock all doors.
- Position the seat so that all controls are easily reached.
- Buckle your seat belt.
- Adjust the inside and outside rearview mirrors.
- Be sure that all lights work.
- Check all gauges.
- Check the operation of warning lights when the engine start/stop button is turned to the ON position.
- Release the parking brake and make sure the brake warning light goes out.

For safe operation, be sure you are familiar with your vehicle and its equipment.

⚠ WARNING - Fire risk

When you intend to park or stop the vehicle with the engine on, be careful not to depress the accelerator pedal for a long period of time. It may overheat the engine or exhaust system and cause fire.

⚠ WARNING - Check surroundings

Always check the surrounding areas near your vehicle for people, especially children, before putting a vehicle into D (Drive) or R (Reverse).

⚠ WARNING - Loose objects

Securely store items in your vehicle. When you make a sudden stop or turn the steering wheel rapidly, loose objects may drop on the floor and it could interfere with the operation of the foot pedals, possibly causing an accident.

⚠ WARNING - Proper footwear

Always wear appropriate shoes when operating your vehicle. Unsuitable shows (high heels, ski boots, sandals, etc.) may interfere with your ability to use the brake and accelerator pedals.

⚠ WARNING - Driving while intoxicated

Do not drive while intoxicated. Drinking and driving is dangerous. Even a small amount of alcohol will affect your reflexes, perceptions and judgment.

Driving while under the influence of drugs is as dangerous as or more dangerous than driving drunk.

ENGINE START/STOP BUTTON

Illuminated ENGINE START/STOP button

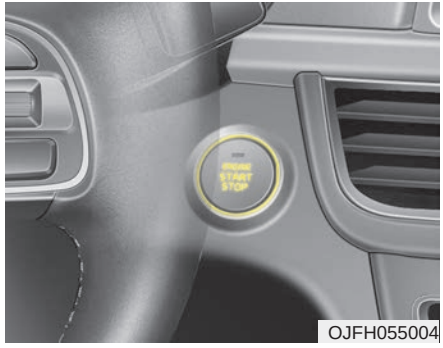

OJFH055004

Whenever the front door is opened, the ENGINE START/STOP button will illuminate for your convenience. The light will go off after about 30 seconds when the door is closed.

When all entrances are closed, if you lock the vehicle by using the transmitter or the smart key, the light will go off immediately.

ENGINE START/STOP button position

OFF

Not illuminated

To turn off the hybrid system (START/RUN position) or vehicle power (ON position), press the ENGINE START/STOP button with the shift lever in the P (Park) position. When you press the ENGINE START/STOP button without the shift lever in the P (Park) position, the ENGINE START/STOP button will not change to the OFF position but to the ACC position.

In an emergency situation while the vehicle is in motion, you are able to turn the hybrid system off and to the ACC position by pressing the ENGINE START/STOP button for more than 2 seconds or 3 times successively within 3 seconds. If the vehicle is still moving, you can restart the hybrid system without depressing the brake pedal by pressing the ENGINE START/STOP button with the shift lever in the N (Neutral) position.

ACC(Accessory)

Amber

Press the ENGINE START/STOP button while it is in the OFF position without depressing the brake pedal.

If the ENGINE START/STOP button is in the ACC position for more than 1 hour, the button is turned off automatically to prevent battery discharge.

ON

Super red

Press the ENGINE START/STOP button while it is in the ACC position without depressing the brake pedal.

The warning lights can be checked before the hybrid system is started. Do not leave the ENGINE START/STOP button in the ON position for a long time. The battery may discharge, because the engine is not running.

START/RUN

Not illuminated

To start the hybrid system, depress the brake pedal and press the ENGINE START/ STOP button with the shift lever in the P (Park) or the N (Neutral) position. For your safety, start the hybrid system with the shift lever in the P (Park) position.

If you press the ENGINE START/STOP button without depressing the brake pedal for automatic transaxle vehicles, the hybrid system will not start and the ENGINE START/STOP button changes as follow:

OFF ➔ ACC ➔ ON ➔ OFF or ACC

✻ NOTICE

If you leave the ENGINE START/STOP button in the ACC or ON position for a long time, the battery will discharge.

> **⚠ WARNING - Starting vehicle**
>
> **Never press the ENGINE START/STOP button while the vehicle is in motion except in an emergency. This would result in loss of directional control and braking function, which could cause an accident.**

Starting the hybrid system

✻ NOTICE

- **The hybrid system will start by pressing the Engine Start/Stop button, only when the smart key is in the vehicle.**
- **Even when the smart key is in the vehicle, if it is far away from the driver, the hybrid system may not start.**
- **When the Engine Start/Stop button is in the ACC or ON position, and any door is open, the system checks for the smart key. When the smart key is not in the vehicle, the "🚗" indicator will blink and the warning "Key not in vehicle" will come on. When all doors are closed, the chime will also sound for about 5 seconds. Keep the smart key in the vehicle when in the ACC position or if the hybrid system is ON.**

1. Always carry the smart key with you.
2. Make sure the parking brake is applied.
3. Make sure the shift lever is in P (Park).
4. Depress the brake pedal.
5. Press the Engine Start/Stop button. If the hybrid system starts, the "🚗" indicator will come on.

✻ NOTICE

- Do not wait for the engine to warm up while the vehicle remains stationary.
  Start driving at moderate engine speeds. (Steep accelerating and decelerating should be avoided.)
- Always start the vehicle with your foot on the brake pedal. Do not depress the accelerator while starting the vehicle. Do not race the engine while warming it up.
- If ambient temperature is low, the " " indicator may remain illuminated longer than the normal amount of time.

✻ NOTICE

To prevent damage to the vehicle:

- If the " " indicator turns off while you are in motion, do not attempt to move the shift lever to the P (Park) position.
  If traffic and road conditions permit, you may put the shift lever in the N (Neutral) position while the vehicle is still moving and press the Engine Start/Stop button in an attempt to restart the hybrid system.
- Do not push or tow your vehicle to start the hybrid system.

⚠ WARNING - Unintended vehicle movement

Never leave the smart key in the vehicle with children or vehicle occupants who are unfamiliar with the vehicle operation. Pushing the ENGINE START/STOP button while the smart key is in the vehicle may result in unintended engine activation and/or unintended vehicle movement.

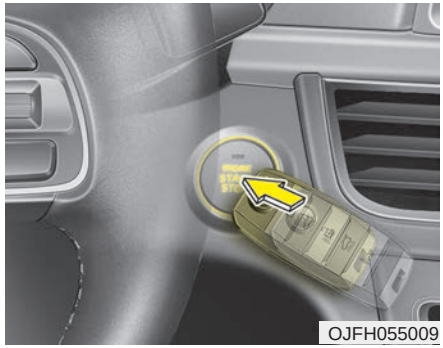

- If the battery is weak or the smart key does not work correctly, you can start the hybrid system by pressing the engine start/stop button with the smart key.

  The side with the lock button should contact the engine start/stop button directly.

  When you press the engine start/stop button directly with the smart key, the smart key should contact the button at a right angle.

- When the stop lamp fuse is blown, you can't start the hybrid system normally. Replace the fuse with a new one. If it is not possible, you can start the hybrid system by pressing the ENGINE START/STOP button for 10 seconds while it is in the ACC position. The engine can start without depressing the brake pedal. But for your safety always depress the brake pedal before starting the hybrid system.

Do not press the ENGINE START/STOP button for more than 10 seconds except when the stop lamp fuse is blown.

AUTOMATIC TRANSAXLE

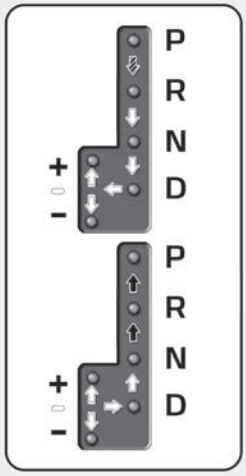

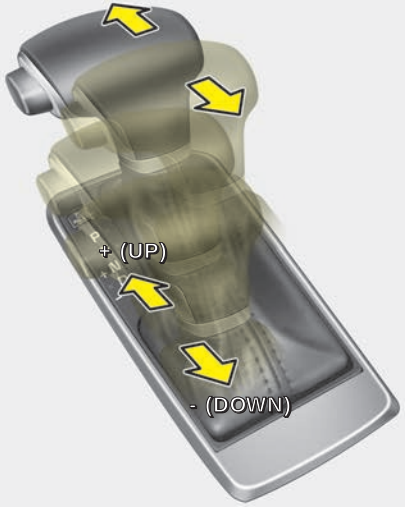

Depress the brake pedal and the lock release button when shifting.

Press the lock release button when shifting.

The shift lever can be shifted freely.

OJF055012

Automatic transaxle operation

The automatic transaxle has 6 forward speeds and one reverse speed. The individual speeds are selected automatically, depending on the position of the shift lever.

✻ NOTICE

The first few shifts on a new vehicle, if the battery has been disconnected, may be somewhat abrupt. This is a normal condition, and the shifting sequence will adjust after shifts are cycled a few times by the TCM (Transaxle Control Module) or PCM (Powertrain Control Module).

For smooth operation, depress the brake pedal and the lock release button when shifting from N (Neutral) to a forward or reverse gear.

⚠ WARNING - Leaving Vehicle

Before leaving the driver's seat, always make sure the shift lever is in the P (Park) position; then set the parking brake fully and shut the engine off. Do not use the P position in place of the parking brake. Always make sure the shift lever is locked in the P position and set the parking brake fully. Unexpected and sudden vehicle movement can occur if these precautions are not followed.

⚠ CAUTION - Transaxle

To avoid damage to your transaxle, do not accelerate the engine in R (Reverse) or any forward gear position with the brakes on. The transaxle may be damaged if you shift into P (Park) while the vehicle is in motion.

When stopped on an incline, do not hold the vehicle with the engine power. Use the service brake or the parking brake.

Transaxle ranges

The indicator in the instrument cluster displays the shift lever position when the engine start/stop button is in the ON position.

P (Park)

Always come to a complete stop before shifting into P (Park). This position locks the transaxle and prevents the drive wheels from rotating.

Shifting into P (Park) while the vehicle is in motion will cause the drive wheels to lock which will cause you to lose control of the vehicle.

To shift from P (Park), you must depress firmly on the brake pedal and make sure your foot is off the accelerator pedal.

If you have done all of the above and still cannot shift the lever out of P (Park), see "Shift-lock override" in this chapter.

The shift lever must be in P (Park) before turning the hybrid system off.

R (Reverse)

Use this position to drive the vehicle backward.

⚠ **CAUTION - Shifting**

Always come to a complete stop before shifting into or out of R (Reverse); you may damage the transaxle if you shift into R (Reverse) while the vehicle is in motion, except when "Rocking the vehicle" explained in this chapter.

N (Neutral)

The wheels and transaxle are not engaged. The vehicle will roll freely even on the slightest incline unless the parking brake or service brakes are applied.

- Parking in N (Neutral) gear

Follow the steps below when parking and you want the vehicle to move when pushed.

1. After parking your vehicle, step on the brake pedal and move the transaxle shift lever to P (Park) with the ignition button in ON or while the engine is running.
2. If the parking brake is applied, unlock the parking brake.
   - For EPB (Electronic Parking Brake) equipped vehicles, push the brake pedal with the ignition button in [ON] or while the engine is running to disengage the parking brake. If AUTO HOLD function is used while driving (If AUTO HOLD indicator is on in the cluster), press AUTO HOLD switch and AUTO HOLD function will turn off.
3. While depressing the brake pedal, turn the ignition button OFF.
   - For smart key equipped vehicles, the ignition switch can be moved to OFF only when the shift lever is in P (Park).
4. Change the gear shift lever to N (Neutral) while pressing the brake pedal and pushing [SHIFT LOCK RELEASE] button or inserting a tool (e.g. flathead screw-driver) into the [SHIFT LOCK RELEASE] access hole at the same time. Then, the vehicle will move when external force is applied.

⚠ WARNING - Parking in Neutral

- **With the exception of parking in neutral gear, always park the vehicle in [P] (Park) for safety and apply the parking brake.**
- **Before parking in [N] (Neutral) gear, first make sure the parking ground is level and flat. Do not park in [N] gear on any slopes or gradients. If parked and left in [N], the vehicle may move and cause serious damage or injury.**

✻ NOTICE

- **After the ignition switch has been turned off, the electronic parking brake cannot be disengaged.**
- **For EPB (Electronic Parking Brake) equipped vehicles with AUTO HOLD function used while driving, if the ignition button has been turned OFF, the electronic parking brake will be engaged automatically. Therefore, AUTO HOLD function should be turned off before the ignition button is turned off.**

D (Drive)

This is the normal forward driving position. The transaxle will automatically shift through a 6-gear sequence, providing the best fuel economy and power.

For extra power when passing another vehicle or climbing grades, depress the accelerator fully, at which time the transaxle will automatically downshift to the next lower gear.

⚠ CAUTION - Starter

If the engine stalls while the vehicle is in motion, do not attempt to move the shift lever to the P (Park) position. If the traffic and road conditions permit, you may put the shift lever in the N (Neutral) position while the vehicle is still moving and press the ENGINE START/STOP button in an attempt to restart the engine.

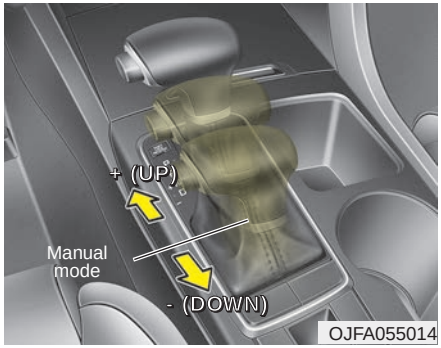

Manual mode

Whether the vehicle is stationary or in motion, manual mode is selected by pushing the shift lever from the D (Drive) position into the manual gate. To return to D (Drive) range operation, push the shift lever back into the main gate.

In manual mode, moving the shift lever backwards and forwards will allow you to make gearshifts rapidly. In contrast to a manual transaxle, the manual mode allows gearshifts with the accelerator pedal depressed.

Up (+) : Push the lever forward once to shift up one gear.

Down (-) : Pull the lever backwards once to shift down one gear.

- In manual mode, the driver must execute upshifts in accordance with road conditions, taking care to keep the engine speed below the red zone.
- In manual mode, only the 6 forward gears can be selected. To reverse or park the vehicle, move the shift lever to the R (Reverse) or P (Park) position as required.
- In manual mode, downshifts are made automatically when the vehicle slows down. When the vehicle stops, 1st gear is automatically selected.
- In manual mode, when the engine rpm approaches the red zone, shift points are varied to upshift automatically.
- To maintain the required levels of vehicle performance and safety, the system may not execute certain gearshifts when the shift lever is operated.
- When driving on a slippery road, push the shift lever forward into the +(up) position. This causes the transaxle to shift into the 2nd gear which is better for smooth driving on a slippery road. Push the shift lever to the -(down) side to shift back to the 1st gear.

Shift lock system

For your safety, the automatic transaxle has a shift lock system which prevents shifting the transaxle from P (Park) into R (Reverse) unless the brake pedal is depressed.

To shift the transaxle from P (Park) into R (Reverse):

1. Depress and hold the brake pedal.
2. Start the hybrid system or turn the ignition switch to the ON position.
3. Move the shift lever.

If the brake pedal is repeatedly depressed and released with the shift lever in the P (Park) position, a chattering noise & vibration near the shift lever may be heard. It is a normal condition.

⚠ WARNING - Shifting from park

Always fully depress the brake pedal before and while shifting out of the P (Park) position into another position to avoid inadvertent motion of the vehicle which could injure persons in or around the vehicle.

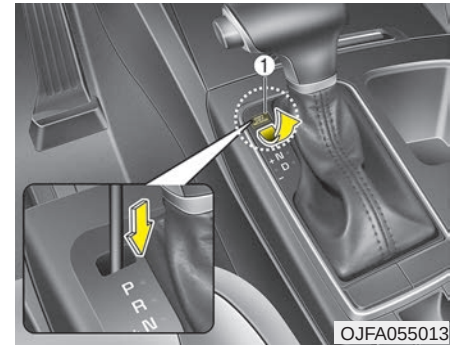

Shift-lock override

If the shift lever cannot be moved from the P (Park) position into R (Reverse) position with the brake pedal depressed, continue depressing the brake, then do the following:

1. Place the engine start/stop button in the OFF position.
2. Apply the parking brake.
3. Carefully remove the cap (1) covering the shift-lock release access hole.
4. Insert a tool (e.g. flathead screwdriver) into the access hole and press down on the tool.

5. Move the shift lever.
6. Remove the tool from the shiftlock override access hole then install the cap.
7. Have your vehicle inspected by an authorized Kia dealer.

If your vehicle is equipped with ENGINE START/STOP button, the button will not change to the OFF position unless the shift lever is in the P (Park) position.

Good driving practices

- Never move the gear shift lever from P (Park) to any other position with the accelerator pedal depressed.
- Never move the gear shift lever into P (Park) when the vehicle is in motion.
- Slow down before shifting to a lower gear. Otherwise, the lower gear may not be engaged.
- Always use the parking brake. Do not depend on placing the transaxle in P (Park) to keep the vehicle from moving.
- Optimum vehicle performance and economy is obtained by smoothly depressing and releasing the accelerator pedal.

✻ NOTICE - Kickdown Mechanism

Use the kickdown mechanism for maximum acceleration. Depress the accelerator pedal beyond the pressure point. The automatic transaxle will shift to a lower gear depending on the engine speed.

Moving up a steep grade from a standing start

To move up a steep grade from a standing start, depress the brake pedal, release the parking brake, and shift the shift lever to D (Drive). Select the appropriate gear depending on load weight and steepness of the grade, and release the parking brake. Depress the accelerator gradually while releasing the service brakes.

BRAKE SYSTEM

Power brakes

Your vehicle has power-assisted brakes that adjust automatically through normal usage.

If the hybrid system is not on or is turned off while driving, the power assist for the brakes will not work. You can still stop your vehicle by applying greater force to the brake pedal than typical. The stopping distance, however, will be longer than with power brakes.

When the hybrid system is not on, the reserve brake power is partially depleted each time the brake pedal is applied. Do not pump the brake pedal when the power assist has been interrupted.

Pump the brake pedal only when necessary to maintain steering control on slippery surfaces.

⚠ CAUTION - Brake Pedal

Do not drive with your foot resting on the brake pedal. This will create abnormally high brake temperatures which can cause excessive brake lining and pad wear.

⚠ WARNING - Steep hill braking

Avoid continuous application of the brakes when descending a long or steep hill by shifting to a lower gear. Continuous brake application will cause the brakes to overheat and could result in a temporary loss of braking performance.

⚠ WARNING - HEV driving down hill

Do not turn off the Hybrid system while going down a hill. The brake booster may not work sufficiently and the braking distance may be longer.

Wet brakes may impair the vehicle's ability to safely slow down; the vehicle may also pull to one side when the brakes are applied. Applying the brakes lightly will indicate whether they have been affected in this way. Always test your brakes in this fashion after driving through deep water. To dry the brakes, apply them lightly while maintaining a safe forward speed until brake performance returns to normal.

✻ NOTICE

Do not depress the brake pedal continuously without the " " indicator ON. The battery may be discharged.

In the event of brake failure

If service brakes fail to operate while the vehicle is in motion, you can make an emergency stop with the parking brake. The stopping distance, however, will be much greater than normal.

⚠ WARNING - Parking brake

Avoid applying the parking brake to stop the vehicle while it is moving except in an emergency situation. Applying the parking brake while the vehicle is moving at normal speeds can cause a sudden loss of control of the vehicle. If you must use the parking brake to stop the vehicle, use great caution in applying the brake.

Disc brakes wear indicator

When your brake pads are worn and new pads are required, you will hear a high-pitched warning sound from your front brakes or rear brakes. You may hear this sound come and go or it may occur whenever you depress the brake pedal.

Please remember that some driving conditions or climates may cause a brake squeal when you first apply (or lightly apply) the brakes. This is normal and does not indicate a problem with your brakes.

Always replace the front or rear brake pads as pairs.

⚠ CAUTION - Replace brake pads

Do not continue to drive with worn brake pads. Continuing to drive with worn brake pads can damage the braking system and result in costly brake repairs.

⚠ WARNING - Brake wear

Do not ignore high pitched wear sounds from your brakes. If you ignore this audible warning, you will eventually lose braking performance, which could lead to a serious accident.

Parking brake – Foot type (if equipped)

Applying the parking brake

OJF055017

To engage the parking brake, first apply the foot brake and then depress the parking brake pedal down as far as possible.

⚠ CAUTION - Parking brake

Driving with the parking brake applied will cause excessive brake pad (or lining) and brake rotor wear.

Releasing the parking brake

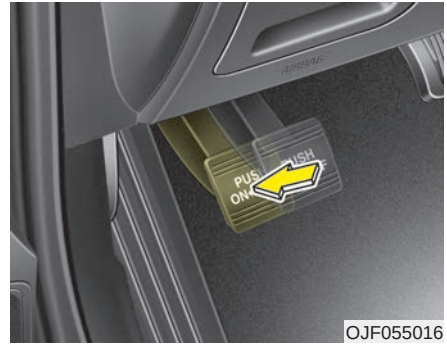

OJF055016

To release the parking brake, depress the parking brake pedal a second time while applying the foot brake. The pedal will automatically extend to the fully released position.

⚠ WARNING - Parking brake use

- **Never allow a passenger to touch the parking brake. If the parking brake is released unintentionally, serious injury may occur.**
- **All vehicles should always have the parking brake fully engaged when parked to avoid inadvertent movement of the vehicles which can injure occupants or pedestrians.**

W-75

Check the brake warning light by pressing engine start/stop button ON (do not start the hybrid system). This light will be illuminated when the parking brake is applied with the engine start/stop button in the START or ON position.

Before driving, be sure the parking brake is fully released and the brake warning light is off.

If the brake warning light remains on after the parking brake is released while the hybrid system is on, there may be a malfunction in the brake system. Immediate attention is necessary.

If at all possible, cease driving the vehicle immediately. If that is not possible, use extreme caution while operating the vehicle and only continue to drive the vehicle until you can reach a safe location or repair shop.

Electronic parking brake (EPB) (if equipped)

Applying the parking brake

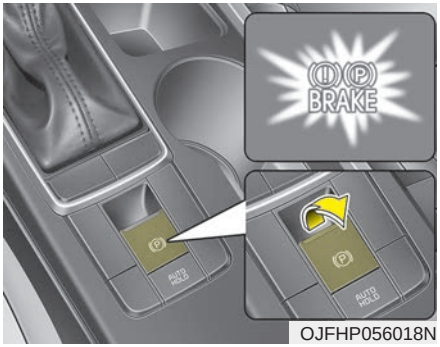

OJFHP056018N

To apply the EPB (electronic parking brake):

1. Depress the brake pedal.
2. Pull up the EPB switch.

Make sure the warning light comes on.

Also, the EPB is applied automatically if the Auto Hold button is on when the engine is turned off.

✻ NOTICE

On a steep incline or when pulling a trailer, if the vehicle does not remain at a standstill, do as follows:

1. **Apply the EPB.**
2. **Pull up the EPB switch for more than 3 seconds.**

Do not operate the parking brake/ EPB while the vehicle is moving except in an emergency situation.

✻ NOTICE

A click or electric brake motor whine sound may be heard while operating or releasing the EPB, but these conditions are normal and indicate that the EPB is functioning properly.

Releasing the parking brake

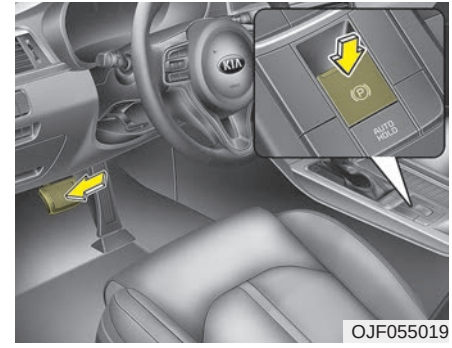

OJF055019

To release the EPB (electronic parking brake), press the EPB switch while doing the following:

- Have the engine start/stop button in the ON position.
- Depress the brake pedal.
- The shift lever must be in P (Park).

Make sure the brake warning light goes off.

To release EPB (electronic parking brake) automatically:

- Shift lever in P (Park)

  With the engine running depress the brake pedal and shift out of P (Park) to R (Reverse) or D (Drive).
- Shift lever in N (Neutral)

  With the engine running depress the brake pedal and shift out of N (Neutral) to R (Reverse) or D (Drive).
- Automatic Transaxle

  1. Start the engine.
  2. Fasten the driver's seat belt.
  3. Close the driver's door, engine hood and trunk.
  4. Depress the accelerator pedal while the shift lever is in R (Rear), D (Drive) or Sports mode.

Make sure the brake warning light goes off.

✻ NOTICE

- **For your safety, you can engage the EPB even though the engine stop/start button is in the OFF position, but you cannot release it.**
- **For your safety, depress the brake pedal and release the parking brake manually with the EPB switch when you drive downhill or when backing up the vehicle.**

Do not follow the above procedure when driving on a flat level ground. The vehicle may suddenly move forward.

✻ NOTICE

If the parking brake warning light is still on even though the EPB has been released, have the system checked by an authorized Kia dealer.

⚠ CAUTION

Do not drive your vehicle with the EPB applied. It may cause excessive brake pad and brake rotor wear.

EPB (electronic parking brake) may be automatically applied when:

- The EPB is overheated
- Requested by other systems
- The hybrid system is turned off with the EPB applied

✻ NOTICE

For EPB equipped vehicles with the AUTO HOLD function used while driving, if the ignition button has been turned OFF, the EPB will be engaged automatically. Therefore, the AUTO HOLD function should be turned off before the ignition button is turned OFF.

System warning

OJFHP058487N

- If you try to drive off depressing the accelerator pedal with the EPB applied, but the EPB doesn't release automatically, a warning will sound and a message will appear.
- If the driver's seat belt is not fastened and the engine hood, driver's door or trunk is opened, a warning will sound and a message will appear.
- If there is a problem with the vehicle, a warning may sound and a message may appear.

If the above situation occurs, depress the brake pedal and release EPB by pressing the EPB switch.

⚠ WARNING - Parking Brake Use

All vehicles should always have the parking brake fully engaged when parked to avoid inadvertent movement of the car which can injure occupants or pedestrians.

- A click or electric brake motor whine sound may be heard while operating or releasing the EPB, but these conditions are normal and indicate that the EPB is functioning properly.
- When leaving your keys with a parking lot attendant or valet, make sure to inform him/her how to operate the EPB.
- The EPB may malfunction if you drive with the EPB applied.
- When you automatically release EPB by depressing the accelerator pedal, depress it slowly.

System warning

OJF055250L

When the conversion from Auto Hold to EPB is not working properly, a warning will sound and a message will appear.

✻ NOTICE

Depress the brake pedal when the above message appears for the Auto Hold and EPB may not activate.

System warning

OJF055252L

If the EPB is applied while Auto Hold is activated because of an ESC (Electronic Stability Control) signal, a warning will sound and a message will appear.

EPB malfunction indicator (if equipped)

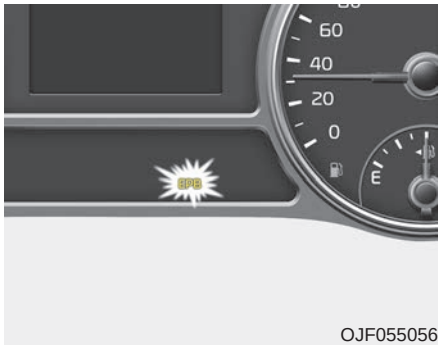

OJF055056

This warning light illuminates if the engine start/stop button is changed to the ON position and goes off in approximately 3 seconds if the system is operating normally.

If the EPB malfunction indicator remains on, comes on while driving, or does not come on when the ignition switch or the engine start/stop button is changed to the ON position, this indicates that the EPB may have malfunctioned.

If this occurs, have your vehicle checked by an authorized Kia dealer as soon as possible.

The EPB malfunction indicator may illuminate when the ESC indicator comes on to indicate that the ESC is not working properly, but it does not indicate a malfunction of the EPB.

- The EPB warning light may illuminate if the EPB switch operates abnormally. Shut the engine off and turn it on again after a few minutes. The warning light will go off and the EPB switch will operate normally. However, if the EPB warning light is still on, have the system checked by an authorized Kia dealer.
- If the parking brake warning light does not illuminate or blinks even though the EPB switch was pulled up, the EPB is not applied.
- If the parking brake warning light blinks when the EPB warning light is on, press the switch, then pull it up. Once more press it back to its original position and pull it back up. If the EPB warning does not go off, have the system checked by an authorized Kia dealer.

Emergency braking

If there is a problem with the brake pedal while driving, emergency braking is possible by pulling up and holding the EPB switch. Braking is possible only while you are holding the EPB switch.

⚠ WARNING

Do not operate the electronic parking brake while the vehicle is moving except in an emergency situation. Applying the electronic parking brake while the vehicle is moving at normal speeds can cause a sudden loss of control of the vehicle. If you must use the electronic parking brake to stop the vehicle, use great caution in applying the brake.

✻ NOTICE

During emergency braking by the EPB, the parking brake warning light will illuminate to indicate that the system is operating.

If you notice a continuous noise or burning smell when the EPB is used for emergency braking, have your vehicle checked by an authorized Kia dealer.

When the EPB (electronic parking brake) is not released

If the EPB does not release normally, take your vehicle to an authorized Kia dealer by loading the vehicle on a flatbed tow truck and have the system checked.

AUTO HOLD (if equipped)

The Auto Hold maintains the vehicle in a standstill even though the brake pedal is not depressed after the driver brings the vehicle to a complete stop by depressing the brake pedal.

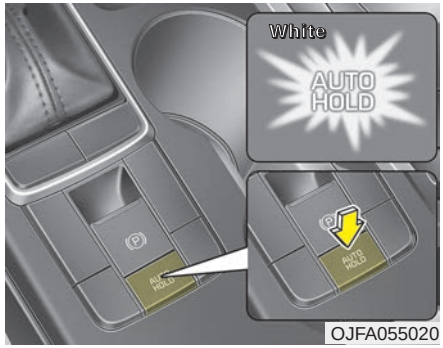

OJFA055020

1. Depress the brake pedal, start the engine and then press the Auto Hold button. The white AUTO HOLD indicator will come on indicating the system is in standby.

   Before the Auto Hold will engage, the driver's door and engine hood must be closed and the driver's seat belt must be fastened.

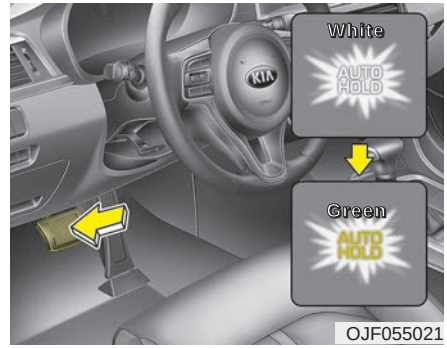

OJF055021

2. When coming to a complete stop by depressing the brake pedal, the AUTO HOLD indicator changes from white to green indicating the AUTO HOLD is engaged and EPB is applied. The vehicle will remain at a standstill even if you release the brake pedal.
3. If EPB is applied, Auto Hold will be released.
4. If you press the accelerator pedal with the shift lever in D (Drive) or manual mode, the Auto Hold will be released automatically and the vehicle will start to move. The indicator changes from green to white indicating the Auto Hold is in standby and the EPB is released.

When driving off from Auto Hold by depressing the accelerator pedal, always check the surrounding area near your vehicle.

Slowly depress the accelerator pedal for a smooth launch.

Cancel

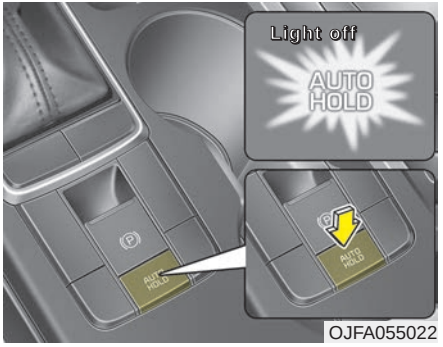

OJFA055022

To cancel the Auto Hold operation, press the Auto Hold switch. The AUTO HOLD indicator will go out.

To cancel the Auto Hold operation when the vehicle is at a standstill, press the Auto Hold switch while depressing the brake pedal.

✻ NOTICE

- **The following are conditions when the Auto Hold will not engage (Auto Hold light will not turn green and the Auto Hold system remains in stand by):**
  - **The driver's seat belt is unfastened and driver's door is opened**
  - **The engine hood is opened**
  - **The shift lever is in P (Park) or R (Reverse)**
  - **The EPB is applied**
- **For your safety, the Auto Hold automatically switches to EPB under any of the following conditions (Auto Hold light remains white and the EPB automatically applies):**
  - **The driver's seat belt is unfastened and driver's door is opened**
  - **The engine hood is opened**
  - **The vehicle is in a standstill for more than 10 minutes**
  - **The vehicle is standing on a steep slopes**

(Continued)

(Continued)

In these cases, the brake warning light comes on, the AUTO HOLD indicator changes from green to white, and a warning sounds and a message will appear to inform you that EPB has been automatically engaged. Before driving off again, press foot brake pedal, check the surrounding area near your vehicle and release parking brake manually with the EPB switch.

- **If the AUTO HOLD indicator lights up yellow, the Auto Hold is not working properly. Take your vehicle to an authorized Kia dealer and have the system checked.**

⚠ WARNING

To reduce the risk of an accident, do not activate Auto Hold while driving downhill, backing up or parking your vehicle.

If there is a malfunction with the driver's door or engine hood open detection system, the Auto Hold may not work properly.

Take your vehicle to an authorized Kia dealer and have the system checked.

✻ NOTICE

A click or electric brake motor whine sound may be heard while operating or releasing the EPB, but these conditions are normal and indicate that the EPB is functioning properly.

Warning messages

OJF055252L

When the EPB is applied from Auto Hold, a warning will sound and a message will appear.

OJF055250L

When the conversion from Auto Hold to EPB is not working properly a warning will sound and a message will appear.

✻ NOTICE

When this message is displayed, the Auto Hold and EPB may not operate. For your safety, depress the brake pedal.

OJF055127L

If you do not apply the brake pedal when you release the Auto Hold by pressing the [AUTO HOLD] switch, a warning will sound and a message will appear.

OJFHP058488N

When you press the [AUTO HOLD] switch, if the driver's door, engine hood and trunk are not closed or the driver's seat belt is unfastened, a warning will sound and a message will appear on the LCD display. At this moment, press the [AUTO HOLD] button after closing the driver's door and engine hood and fastening the seat belt.

Anti-lock brake system (ABS)

ABS (or ESC) will not prevent accidents due to improper or dangerous driving maneuvers. Even though vehicle control is improved during emergency braking, always maintain a safe distance between you and objects ahead. Vehicle speeds should always be reduced during extreme road conditions. The vehicle should be driven at reduced speeds in the following circumstances:

- When driving on rough, gravel or snow-covered roads
- When driving on roads where the road surface is pitted or has different surface heights.

Driving in these conditions increases the stopping distance for your vehicle.

The ABS continuously senses the speed of the wheels. If the wheels are going to lock, the ABS system repeatedly modulates the hydraulic brake pressure to the wheels.

When you apply your brakes under conditions which may lock the wheels, you may hear a “tik-tik” sound from the brakes, or feel a corresponding sensation in the brake pedal. This is normal and it means your ABS is active.

In order to obtain the maximum benefit from your ABS in an emergency situation, do not attempt to modulate your brake pressure and do not try to pump your brakes. Press your brake pedal as hard as possible to allow the ABS to control the force being delivered to the brakes.

✻ NOTICE

A click sound may be heard in the engine compartment when the vehicle begins to move after the engine is started. These conditions are normal and indicate that the anti-lock brake system is functioning properly.

- Even with the anti-lock brake system, your vehicle still requires sufficient stopping distance. Always maintain a safe distance from the vehicle in front of you.
- Always slow down when cornering. The anti-lock brake system cannot prevent accidents resulting from excessive speeds.
- On loose or uneven road surfaces, operation of the anti-lock brake system may result in a longer stopping distance than for vehicles equipped with a conventional brake system.

W-78

The ABS warning light will stay on for approximately 3 seconds after the engine start/stop button is ON. During that time, the ABS will go through self-diagnosis and the light will go off if everything is normal. If the light stays on, you may have a problem with your ABS. Contact an authorized Kia dealer as soon as possible.

- When you drive on a road having poor traction, such as an icy road, and have operated your brakes continuously, the ABS will be active continuously and the ABS warning light may illuminate. Pull your vehicle over to a safe place and stop the engine.
- Restart the engine. If the ABS warning light goes off, then your ABS system is normal. Otherwise, you may have a problem with the ABS. Contact an authorized Kia dealer as soon as possible.

✻ NOTICE

When you jump start your vehicle because of a drained battery, the engine may not run as smoothly and the ABS warning light may turn on at the same time. This happens because of low battery voltage. It does not mean your ABS has malfunctioned.

- **Do not pump your brakes!**
- **Have the battery recharged before driving the vehicle.**

Electronic stability control (ESC)

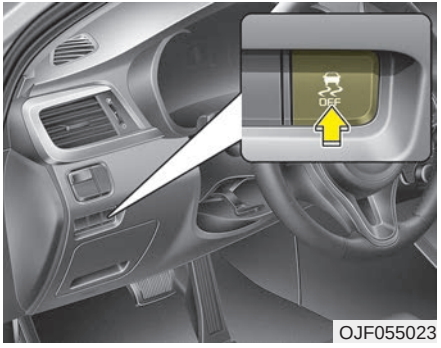

OJF055023

The Electronic Stability control (ESC) system is designed to stabilize the vehicle during cornering maneuvers. ESC checks where you are steering and where the vehicle is actually going. ESC applies the brakes on individual wheels and intervenes with the engine management system to stabilize the vehicle.

Electronic stability control (ESC) will not prevent accidents. Excessive speed in turns, abrupt maneuvers and hydroplaning on wet surfaces can still result in serious accidents. Only a safe and attentive driver can prevent accidents by avoiding maneuvers that cause the vehicle to lose traction. Even with ESC installed, always follow all the normal precautions for driving - including driving at safe speeds for the conditions.

⚠ WARNING

For maximum protection, always wear your seat belt. No system, no matter how advanced, can compensate for all driver error and/or driving conditions.

Always drive responsibly.

The Electronic Stability Control (ESC) system is an electronic system designed to help the driver maintain vehicle control under adverse conditions. It is not a substitute for safe driving practices. Factors including speed, road conditions and driver steering input can all affect whether ESC will be effective in preventing a loss of control. It is still your responsibility to drive and corner at reasonable speeds and to leave a sufficient margin of safety.

When you apply your brakes under conditions which may lock the wheels, you may hear a “tik-tik” sound from the brakes, or feel a corresponding sensation in the brake pedal. This is normal and it means your ESC is active.

✻ NOTICE

A click sound may be heard in the engine compartment when the vehicle begins to move after the engine is started. These conditions are normal and indicate that the Electronic Stability Control System is functioning properly.

ESC operation

ESC ON condition

-

- When the engine start/stop button is turned ON, ESC and ESC OFF indicator lights illuminate for approximately 3 seconds, then ESC is turned on.
- Press the ESC OFF button for at least half a second after turning the ignition ON to turn ESC off. (ESC OFF indicator will illuminate). To turn the ESC on, press the ESC OFF button (ESC OFF indicator light will go off).
- When starting the engine, you may hear a slight ticking sound. This is the ESC performing an automatic system self-check and does not indicate a problem.

When operating

When the ESC is in operation, the ESC indicator light blinks.

- When the Electronic Stability Control is operating properly, you can feel a slight pulsation in the vehicle. This is only the effect of brake control and indicates nothing unusual.
- When moving out of the mud or driving on a slippery road, pressing the accelerator pedal may not cause the engine rpm (revolutions per minute) to increase.

ESC operation off

ESC OFF state

This car has 2 kinds of ESC off states.

If the engine stops when ESC is off, ESC remains off. Upon restarting the engine, the ESC will automatically turn on again.

OJF055254L

• ESC off state 1

To turn off the traction control function and the brake control function to ESC operation, press the ESC OFF button (ESC OFF) for less than 3 seconds (ESC OFF indicator light (ESC OFF) will illuminate). At this state, only the brake control function will operate.

OJF055232L

• ESC off state 2

To turn off the traction control function and the brake control function to ESC operation, press the ESC OFF button (ESC OFF) for more than 3 seconds. ESC OFF indicator light (ESC OFF) will illuminate and the ESC OFF warning chime will sound. At this state, the car stability control function does not operate any more.

Indicator light

■ ESC indicator light

■ ESC OFF indicator light

When engine start/stop button is turned to ON, the indicator light illuminates, then goes off if the ESC system is operating normally.

The ESC indicator light blinks whenever ESC is operating or illuminates when ESC fails to operate.

The ESC OFF indicator light comes on when the ESC is turned off with the button.

⚠ WARNING - Electronic stability control

Drive carefully even though your vehicle has Electronic Stability Control. It can only assist you in maintaining control under certain circumstances.

ESC OFF usage

When driving

- ESC should be turned on for daily driving whenever possible.
- To turn ESC off while driving, press the ESC OFF button while driving on a flat road surface.

⚠ WARNING - Operating ESC

Never press the ESC OFF button while ESC is operating (ESC indicator light blinks).

If ESC is turned off while ESC is operating, the vehicle may slip out of control.

✻ NOTICE

- **When operating the vehicle on a dynamometer, ensure that the ESC is turned off (ESC OFF light illuminated). If the ESC is left on, it may prevent the vehicle speed from increasing, and result in false diagnosis.**
- **Turning the ESC off does not affect ABS or brake system operation.**

Vehicle stability management (VSM)

This system provides further enhancements to vehicle stability and steering responses when a vehicle is driving on a slippery road or a vehicle detects changes in coefficient of friction between right wheels and left wheels when braking.

⚠ WARNING - Tire/ Wheel size

When replacing tires and wheels, make sure they are the same size as the original tires and wheels installed. Driving with varying tire or wheel sizes may diminish any supplemental safety benefits of the VSM system.

VSM operation

When the VSM is in operation, ESC indicator light ( ) blinks.

When the vehicle stability management is operating properly, you can feel a slight pulsation in the vehicle and/or abnormal steering responses (EPS- Electronic Power Steering). This is only the effect of brake and EPS control and indicates nothing unusual.

The VSM does not operate when:

- Driving on a sloping road such as a gradient or incline
- Driving in reverse
- ESC OFF indicator light ( ) remains on the instrument cluster
- EPS indicator light remains on the instrument cluster

VSM operation off

If you press the ESC OFF button to turn off the ESC, the VSM will also cancel and the ESC OFF indicator light ( ) illuminates.

To turn on the VSM, press the button again. The ESC OFF indicator light goes out.

⚠ WARNING - Vehicle stability management

Drive carefully even though your vehicle has vehicle stability management. It can only assist you in maintaining control of the vehicle under certain circumstances.

Malfunction indicator

The VSM can be deactivated even if you don't cancel the VSM operation by pressing the ESC OFF button. It indicates that a malfunction has been detected somewhere in the Electric Power Steering system or VSM system. If the ESC indicator light ( ) or EPS warning light remains on, take your vehicle to an authorized Kia dealer and have the system checked.

✻ NOTICE

- **The VSM is designed to function above approximately 22 km/h (13 mph) on curves.**
- **The VSM is designed to function above approximately 10 km/h (6 mph) when a vehicle is braking on a split-mu surface. A split-mu surface is made of two surfaces which have different friction forces.**

- The Vehicle Stability Management system is not a substitute for safe driving practices but a supplementary function only. It is the responsibility of the driver to always check the speed and the distance to the vehicle ahead. Always hold the steering wheel firmly while driving.
- Your vehicle is designed to activate according to the driver's intention, even with installed VSM. Always follow all the normal precautions for driving at safe speeds for the conditions – including driving in inclement weather and on a slippery road.

⚠ WARNING

For maximum protection, always wear your seat belt. No system, no matter how advanced, can compensate for all driver error and/or driving conditions.

Always drive responsibly.

Hill-start assist control (HAC)

A vehicle has the tendency to roll back on a steep hill when it starts to go after stopping. The Hill-start Assist Control (HAC) prevents the vehicle from rolling back by applying the brakes automatically for about 2 seconds. The brakes are released when the accelerator pedal is depressed or after about 2 seconds.

The HAC is activated only for about 2 seconds, so when the vehicle is starting off always depress the accelerator pedal.

⚠ WARNING - Maintaining Brake Pressure on Incline

HAC does not replace the need to apply brakes while stopped on an incline. While stopped, make sure you maintain brake pressure sufficient to prevent your vehicle from rolling backward and causing an accident. Don't release the brake pedal until you are ready to accelerate forward.

Good braking practices

- Check to be sure the parking brake is not engaged and the parking brake indicator light is out before driving away.
- Driving through water may get the brakes wet. They can also get wet when the vehicle is washed. Wet brakes can be dangerous! Your vehicle will not stop as quickly if the brakes are wet. Wet brakes may cause the vehicle to pull to one side.

  To dry the brakes, apply the brakes lightly until the braking action returns to normal, taking care to keep the vehicle under control at all times. If the braking action does not return to normal, stop as soon as it is safe to do so and call an authorized Kia dealer for assistance.
- Don't coast down hills with the vehicle out of gear. This is extremely hazardous. Keep the vehicle in gear at all times, use the brakes to slow down, then shift to a lower gear so that engine braking will help you maintain a safe speed.
- Don't "ride" the brake pedal. Resting your foot on the brake pedal while driving can be dangerous because the brakes might overheat and lose their effectiveness. It also increases the wear of the brake components.
- If a tire goes flat while you are driving, apply the brakes gently and keep the vehicle pointed straight ahead while you slow down. When you are moving slowly enough for it to be safe to do so, pull off the road and stop in a safe place.
- If your vehicle is equipped with an Automatic Transaxle, don't let your vehicle creep forward. To avoid creeping forward, keep your foot firmly on the brake pedal when the vehicle is stopped.
- Be cautious when parking on a hill. Firmly engage the parking brake and place the shift lever in P (automatic transaxle). If your vehicle is facing downhill, turn the front wheels into the curb to help keep the vehicle from rolling.

If your vehicle is facing uphill, turn the front wheels away from the curb to help keep the vehicle from rolling. If there is no curb or if it is required by other conditions to keep the vehicle from rolling, block the wheels.

- Under some conditions your parking brake can freeze in the engaged position. This is most likely to happen when there is an accumulation of snow or ice around or near the rear brakes or if the brakes are wet. If there is a risk that the parking brake may freeze, apply it only temporarily while you put the shift lever in P (automatic transaxle) and block the rear wheels so the vehicle cannot roll. Then release the parking brake.
- Do not hold the vehicle on an incline with the accelerator pedal. This can cause the transaxle to overheat. Always use the brake pedal or parking brake.

FORWARD COLLISION-AVOIDANCE ASSIST (FCA) (IF EQUIPPED)

The FCA system is designed to detect and monitor the vehicle ahead or detect a pedestrian (if equipped) in the roadway through radar signals and camera recognition to warn the driver that a collision is imminent, and if necessary, apply emergency braking.

⚠ WARNING

Take the following precautions when using the Forward Collision-avoidance Assist (FCA) system:

- **This system is only a supplemental system and it is not intended to, nor does it replace the need for extreme care and attention of the driver. The sensing range and objects detectable by the sensors are limited. Pay attention to the road conditions at all times.**
- **NEVER drive too fast in accordance with the road conditions or while cornering.**
- **Always drive cautiously to prevent unexpected and sudden situations from occurring. FCA does not stop the vehicle completely and does not avoid collisions.**

System setting and activation

System setting

The driver can activate the FCA by placing the ignition switch to the ON position and by selecting 'User Settings', 'Driver Assistance', and 'Forward Collision-avoidance Assist'. The FCA deactivates, when the driver cancels the system setting.

The warning light illuminates on the LCD display, when you cancel the FCA system. The driver can monitor the FCA ON/OFF status on the LCD display. Also, the warning light illuminates when the ESC (Electronic Stability Control) is turned off (Traction & Stability control disabled.).

When the warning light remains ON with the FCA activated, take your vehicle to an authorized Kia dealer and have the system checked.

The driver can select the initial warning activation time in the User Settings in the instrument cluster LCD display. The options for the initial Forward Collision Warning include the following:

- EARLY - When this condition is selected, the initial Forward Collision Warning is activated earlier than normal. This setting maximizes the amount of distance between the vehicle or pedestrian ahead before the initial warning occurs. If the 'EARLY' condition feels too sensitive, change it into 'NORMAL'. When the vehicle ahead suddenly stops, the warning may seem to activate later even if the 'EARLY' condition was selected.
- NORMAL - When this condition is selected, the initial Forward Collision Warning is activated normally. This setting allows for a nominal amount of distance between the vehicle or pedestrian ahead before the initial warning occurs.
- LATE - When this condition is selected, the initial Forward Collision Warning is activated later than normal. This setting reduces the amount of distance between the vehicle or pedestrian ahead before the initial warning occurs. Select this condition only when traffic is light, and you are driving slowly.

Prerequisite for activation

The FCA will activate when the FCA is selected on the LCD display, and when the following prerequisites are satisfied:

- The ESC (Electronic Stability Control) is activated.
- The driving speed is over 10 km/h (6 mph). (The FCA only works within a certain range of vehicle speeds)
- When the FCA recognizes a vehicle or the pedestrian in front. (The FCA may not recognize every obstacle or provide warnings and braking in every situation, so do not rely on the FCA to stop the vehicle in instances where the driver sees an obstacle and has the ability to apply the brakes)

⚠ WARNING

- **The FCA automatically activates upon placing the ignition switch to the ON position. The driver can deactivate the FCA by canceling the system setting on the LCD display.**
- **The FCA automatically deactivates upon canceling the ESC. When the ESC is canceled, the FCA cannot be activated on the LCD display.**

  The FCA warning light will illuminate.
- **Set or cancel FCA after stopping the vehicle in the safe place for your safety.**

FCA warning message and system control

The FCA system produces warning messages, warning alarms, and emergency braking based on the level of risk of a frontal collision, such as when a vehicle ahead suddenly brakes, or when the system detects that a collision with a pedestrian is imminent.

The driver can select the initial warning activation time in the User Settings in the LCD display. The options for the initial Forward Collision Warning include Early, Normal or Late initial warning time.

Collision Warning (1st warning)

OJFHP058472N

- The warning message appears on the LCD display with the warning alarms.
- The FCA controls the brakes within certain limit to reduce the impact from the collision.

Emergency braking (2nd warning)

OJFHP058473N

- The warning message appears on the LCD display with the warning alarms.
- The FCA controls the brakes within certain limit to reduce the impact from the collision.

  The FCA controls the maximum brakes just before the collision.

Brake operation

- In an urgent situation, the braking system enters into the ready status for prompt reaction to assist the driver in depressing the brake pedal.
- The FCA provides additional braking power for optimum braking performance when the driver depresses the brake pedal.
- The braking control is automatically deactivated when the driver sharply depresses the accelerator pedal, or when the driver abruptly operates the steering wheel.
- The braking control is automatically canceled when risk factors disappear.

The driver should always pay great caution to vehicle operation, even though there is no warning message or warning alarm.

⚠ WARNING

The FCA cannot avoid all collisions. The FCA might not completely stop the vehicle before collision, due to ambient, weather and road conditions. The driver has the responsibility to drive safely and control the vehicle.

⚠ WARNING

The FCA is a supplemental system and cannot completely stop the vehicle in all situations or avoid all collisions. It is the responsibility of the driver to safely drive and control the vehicle.

⚠ WARNING

Never deliberately drive dangerously to activate the system as such conduct increases the risk of an accident.

✻ NOTICE

The FCA system assesses the risk of a collision by monitoring several variables such as the distance to the vehicle/pedestrian ahead, the speed of the vehicle/pedestrian ahead, and the driver's operation of the vehicle. Certain conditions such as inclement weather and road conditions may affect the operation of the FCA system.
For the system operation, do not attempt risky driving.

FCA front radar/camera sensor

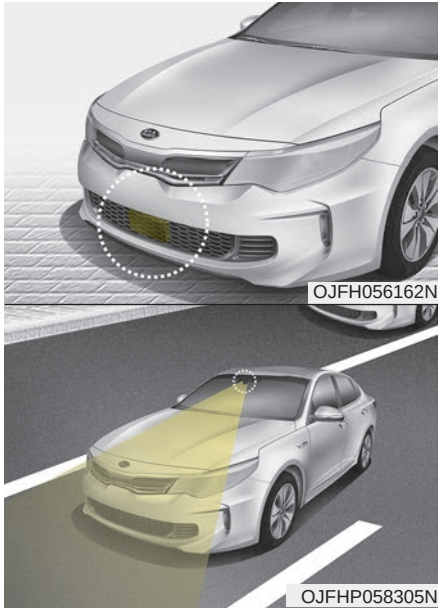

In order for the FCA system to operate properly, always make sure the sensor or sensor cover is clean and free of dirt, snow, and debris. Dirt, snow, or foreign substances on the sensor or its external parts may adversely affect the sensing performance of the sensor.

✻ NOTICE

- **Do not apply foreign objects such as a bumper sticker or a bumper guard near the radar sensor.**
  Doing so may adversely affect the sensing performance of the radar.
- **Always keep the radar sensor and cover clean and free of dirt and debris.**
- **Use only soft clothes to wash the vehicle. Do not spray pressurized water directly on the sensor or sensor cover.**
- **Be careful not to apply unnecessary force on the radar sensor or sensor cover. If the sensor is forcibly moved out of proper alignment, the FCA system may not operate correctly. In this case, a warning message may not be displayed. Have the vehicle inspected by an authorized Kia dealer.**
- **If the front bumper becomes damaged in the area around the radar sensor, the FCA system may not operate properly. In this case, have your vehicle inspected by an authorized Kia dealer.**

(Continued)

(Continued)

- **Use only genuine parts to repair or replace a damaged sensor or sensor cover. Do not apply paint to the sensor cover.**
- **Do not tint the window or install stickers or accessories around the inside mirror where the camera is installed.**
- **Make sure the frontal camera installation point does not get wet.**
- **Do not impact or remove any radar/camera components.**
- **Do not place reflective objects(white paper or mirror etc.) on the dashboard.**
  The system may activate unnecessarily due to reflection of the sunlight.
- **Excessive audio system volume may prevent occupants from hearing the FCA system warning alarm.**

Warning message and warning light

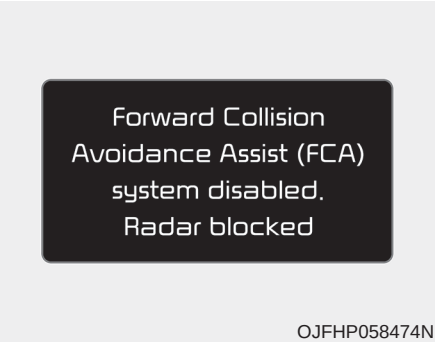

OJFHP058474N

When the sensor is covered or the sensor lens is dirty with foreign substances, such as snow or rain, the FCA system may not be able to detect vehicles or pedestrians. In this case, a warning message will appear to notify the driver. Remove the foreign substances to allow the FCA system to function normally.

Remove any dirt, snow, or debris and clean the radar sensor cover before operating the FCA system.

The FCA may not properly operate in an area (e.g. open terrain), where any substances are not detected after turning ON the engine.

System malfunction

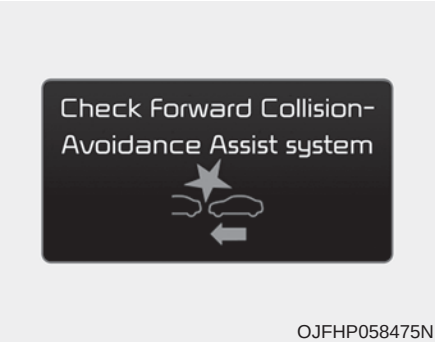

OJFHP058475N

- When the FCA is not working properly, the FCA warning light ( ) will illuminate and the warning message will appear for a few seconds.

  After the message disappears, the master warning light ( ) will illuminate. In this case, take your vehicle to an authorized Kia dealer and have the system checked.

- The FCA system will get deactivated for the sake of driver's safety when the ESC warning light comes on. The FCA warning message will appear at the same time, too. But that doesn't necessarily mean the malfunction of the FCA system. Both FCA warning light and warning message will disappear once the ESC warning light issue is resolved.

⚠ WARNING

- **The FCA is only a supplemental system for the driver's convenience. The driver should hold the responsibility to control the vehicle operation. Do not solely depend on the FCA system. Rather, maintain a safe braking distance, and, if necessary, depress the brake pedal to lower the driving speed.**
- **In certain instances and under certain driving conditions, the FCA system may activate unintentionally. This initial warning message appears on the LCD display with a warning chime.**

  Also, in certain instances the front radar sensor or camera recognition system may not detect the vehicle or pedestrian ahead. The FCA system may not activate and the warning message will not be displayed.

(Continued)

(Continued)

- **The FCA may unnecessarily produce the warning message and the warning alarms. Also, due to the sensing limitation, the FCA may not produce the warning message and the warning alarm at all.**
- **When there is a malfunction with the FCA, the braking control does not operate upon detecting a collision risk even with other braking systems normally operating.**
- **The FCA operates only for the vehicle / pedestrian in front, while driving forward. It does not operate for any animals or vehicles in the opposite direction.**
- **The FCA does not recognize the vehicle, which horizontally drives across the crossroad, or the vehicle, which is parked in the horizontal direction.**

(Continued)

(Continued)

- If the vehicle in front stops suddenly, you may have less control of the brake system. Therefore, always keep safe distance between your vehicle and the vehicle in front of you.
- The FCA system may activate during braking and the vehicle may stop suddenly. And the load in the vehicle may endanger passengers. Therefore, always be mindful of the load volume in the vehicle.
- The FCA system may not activate if the driver applies the brake pedal to avoid risk of collision.
- If there is a malfunction with the FCA system, the autonomous emergency braking is not applied even thought the braking system is operating normally.
- The FCA system operates only to detect vehicles in front of the vehicle.

(Continued)

(Continued)

- The FCA system does not operate when the vehicle is in reverse.
- The FCA system is not designed to detect other objects on the road such as animals.
- The FCA system does not detect vehicles in the opposite lane.
- The FCA system does not detect cross traffic vehicles that are approaching.
- The FCA system cannot detect the driver approaching the side view of a parked vehicle (for example on a dead end street.)

  In these cases, you must maintain a safe braking distance, and if necessary, depress the brake pedal to reduce the driving speed in order to maintain a safe distance.

(Continued)

(Continued)

- The regular braking function will operate normally even if there is a problem with the FCA brake control system or other functions. In this case, the braking control will not operate in the risk of a collision.
- The FCA system may not activate according to driving condition, traffic on the road, weather, road condition, etc.
- The FCA system may not activate to all types of vehicles.

Limitation of the system

The FCA is an assistant system for a driver in a certain risky driving condition and it does not take every responsibility for all risks from driving condition.

The FCA monitors the driving situations through the radar and the camera sensor. Thus, for a situation out of the sensing range, the FCA may not normally operate. The driver should pay great caution in the following situations. The FCA operation may be limited.

Recognizing vehicles

The sensor may be limited when:

- The radar sensor or camera is blocked with a foreign object or debris
- The camera lens is contaminated due to tinted, filmed or coated windshield, damaged glass, or stuck of foreign matter (sticker, bug, etc.) on the glass
- Inclement weather such as heavy rain or snow obscures the field of view of the radar sensor or camera
- There is interference by electromagnetic waves
- There is severe irregular reflection from the radar sensor
- The radar/camera sensor recognition is limited
- The vehicle in front is too small to be detected (for example a motorcycle etc.)
- The vehicle in front is an oversize vehicle or trailer that is too big to be detected by the camera recognition system (for example a tractor trailer, etc.)
- The camera's field of view is not well illuminated (either too dark or too much reflection or too much backlight that obscures the field of view)
- The vehicle in front does not have their rear lights or their rear lights does not turned ON or their rear lights are located unusually.
- The outside brightness changes suddenly, for example when entering or exiting a tunnel
- When light coming from a street light or an oncoming vehicle is reflected on a wet road surface such as a puddle in the road
- The field of view in front is obstructed by sun glare
- The windshield glass is fogged up; a clear view of the road is obstructed
- The vehicle in front is driving erratically
- The vehicle is on unpaved or uneven rough surfaces, or road with sudden gradient changes.

- The vehicle is driven near areas containing metal substances as a construction zone, railroad, etc.
- The vehicle drives inside a building, such as a basement parking lot
- The camera does not recognize the entire vehicle in front.
- The camera is damaged.
- The brightness outside is too low such as when the headlamps are not on at night or the vehicle is going through a tunnel.
- The shadow is on the road by a median strip, trees, etc.
- The vehicle drives through a tollgate.
- The windshield glass is fogged up; a clear view of the road is obstructed.
- The rear part of the vehicle in front is not normally visible. (the vehicle turns in other direction or the vehicle is overturned.)
- The adverse road conditions cause excessive vehicle vibrations while driving
- The sensor recognition changes suddenly when passing over a speed bump
- The vehicle in front is moving vertically to the driving direction
- The vehicle in front is stopped vertically
- The vehicle in front is driving towards your vehicle or reversing
- You are on a roundabout and the vehicle in front circles

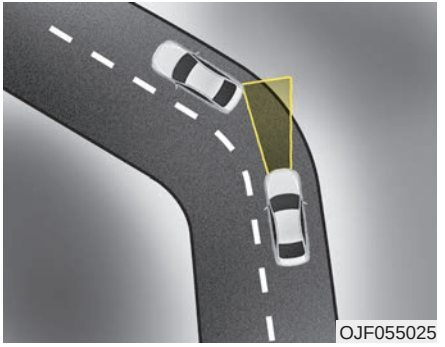

- Driving on a curve

The performance of the FCA system may be limited when driving on a curved road.

On curved roads, the other vehicle on the same lane is not recognized and the FCA system's performance may be degraded. This may produce the warning message and the warning alarm prematurely, or it may not produce the warning message or the warning alarm at all.

Also, in certain instances the front radar sensor or camera recognition system may not detect the vehicle traveling on a curved road. When driving on a curve, exercise caution, maintain a safe braking distance, and if necessary, depress the brake pedal to reduce your driving speed in order to maintain a safe distance.

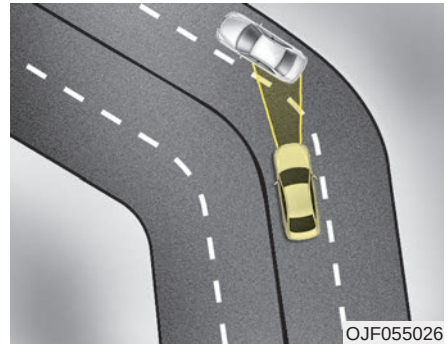
OJF055026

The FCA system may recognize a vehicle in an adjacent lane when driving on a curved road. In this case, the system may apply the brake.

Always pay attention to road and driving conditions while driving. If necessary, depress the brake pedal to reduce your driving speed in order to maintain a safe distance. Also, when necessary, you may depress the accelerator pedal to prevent the system from unnecessarily decelerating your vehicle.

Always check the traffic conditions around the vehicle.

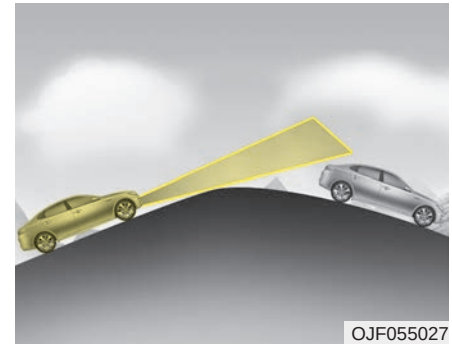
OJF055027

- Driving on a slope

The performance of the FCA may be limited while driving upward or downward on a slope, and may not recognize the vehicle in front in the same lane. It may prematurely produce the warning message and the warning alarm, or it may not produce the warning message and the warning alarm at all.

When the FCA suddenly recognizes the vehicle in front while passing over a slope, you may experience sharp deceleration.

Always keep your eyes forward while driving upward or downward on a slope, and, if necessary, depress the brake pedal to reduce your driving speed in order to maintain a safe distance.

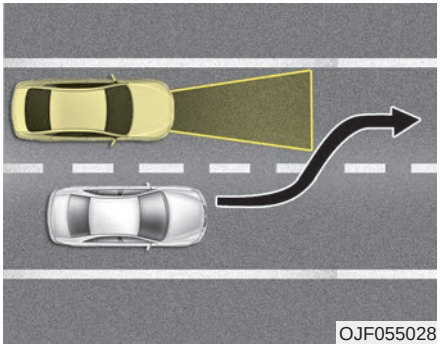

- Changing lanes

When a vehicle changes lanes in front of you, the FCA system may not immediately detect the vehicle, especially if the vehicle changes lanes abruptly. In this case, you must maintain a safe braking distance, and if necessary, depress the brake pedal to reduce your driving speed in order to maintain a safe distance.

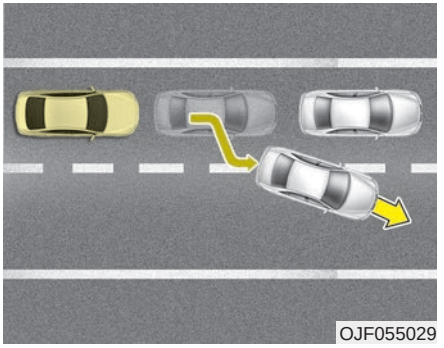

When driving in stop-and-go traffic, and a stopped vehicle in front of you merges out of the lane, the FCA system may not immediately detect the new vehicle that is now in front of you. In this case, you must maintain a safe braking distance, and if necessary, depress the brake pedal to reduce your driving speed in order to maintain a safe distance.

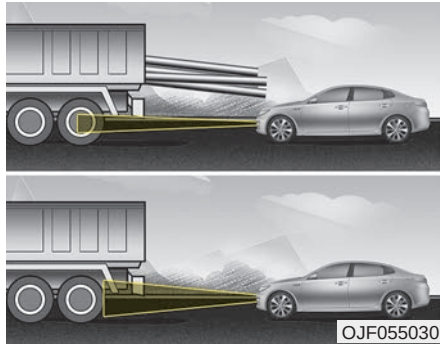

- Detecting the vehicle in front of you

If the vehicle in front of you has cargo that extends rearward from the cab, or when the vehicle in front of you has higher ground clearance, additional special attention is required.

The FCA system may not be able to detect the cargo extending from the vehicle. In these instances, you must maintain a safe braking distance from the rearmost object, and if necessary, depress the brake pedal to reduce your driving speed in order to maintain distance.

Recognizing pedestrians

- The pedestrian is not fully captured by the camera sensor, or the pedestrian does not walk in the upright position.
- The pedestrian moves very fast.
- The pedestrian abruptly appears in front.
- The pedestrian wears clothes similar in color to the background.
- Conditions outside are too bright or too dark.
- The vehicle drives at night or in the darkness.
- There is an item similar in shape a person's body structure.
- The pedestrian is small.
- The pedestrian has impaired mobility.
- The pedestrian blends in with their surroundings.
- Sensor recognition is limited by rain, snow, fog, etc.
- There is a group of pedestrians.

⚠ WARNING

- **Cancel the FCA in the User Settings on the LCD display, before towing another vehicle. While towing, the brake application may adversely affect your vehicle safety.**
- **Pay great caution to the vehicle in front, when it has heavy loading extended rearward, or when it has higher ground clearance.**
- **The FCA system is designed to detect and monitor the vehicle ahead or detect a pedestrian in the roadway through radar signals and camera recognition. It is not designed to detect bicycles, motorcycles, or smaller wheeled objects such as luggage bags, shopping carts, or strollers.**

(Continued)

(Continued)

- **The FCA does not operate in a certain situation. Thus, never test-operate the FCA against a person or an object. It may cause a severe injury or even death.**
- **When replacing or reinstalling the windshield, front bumper or radar/camera after removal, take your vehicle to an authorized Kia dealer and have the system checked.**

✻ NOTICE

The system may temporarily cancel due to the strong electric waves.

This device complies with Industry Canada licence-exempt RSS standard(s).

Operation is subject to the following conditions:

(1) This device may not cause interference, and

(2) This device must accept any interference, including interference that may cause undesired operation of the device.

(3) Changes or modifications not expressly approved by the party responsible for compliance could void the user's authority to operate the device.

CRUISE CONTROL SYSTEM

OJFHP056037N

The cruise control system allows you to program the vehicle to maintain a constant speed without depressing the accelerator pedal.

This system is designed to function above approximately 30 km/h (20 mph).

If the cruise control is left on, (CRUISE indicator light in the instrument cluster illuminated) the cruise control can be switched on accidentally. Keep the cruise control system off (CRUISE indicator light OFF) when the cruise control is not in use, to avoid inadvertently setting a speed.

Use the cruise control system only when traveling on open highways in good weather.

Do not use the cruise control when driving in heavy or varying traffic, or on slippery (rainy, icy or snow-covered) or winding roads or over 6% up-hill or down-hill roads.

✻ NOTICE

- **During normal cruise control operation, when the SET switch is activated or reactivated after applying the brakes, the cruise control will activate after approximately 3 seconds. This delay is normal.**
- **To activate cruise control, depress the brake pedal at least once after turning the engine start/stop button to the ON position or starting the engine. This is to check if the brake switch, which is an important part to cancelling cruise control, is in normal condition.**

⚠ WARNING - Misuse of Cruise Control

Do not use cruise control if the traffic situation does not allow you to drive safely at a constant speed and with sufficient distance to the vehicle in front.

To set cruise control speed:

OJF055038

1. Press the CRUISE button on the steering wheel to turn the system on. The CRUISE indicator light in the instrument cluster will illuminate.
2. Accelerate to the desired speed, which must be more than 30 km/h (20 mph).

OJF055039

3. Move the lever down (to SET-), and release it at the desired speed. The SET indicator light in the instrument cluster will illuminate. Release the accelerator at the same time. The desired speed will automatically be maintained.

On a steep grade, the vehicle may slow down slightly when driving uphill or speed up slightly while going downhill.

To increase cruise control set speed:

OJF055040

Follow either of these procedures:

- Move the lever up (to RES+) and hold it. Your vehicle will accelerate. Release the lever at the speed you want.
- Move the lever up (to RES+) and release it immediately. The cruising speed will increase by 2 km/h (1.0 mph) each time the lever is operated in this manner.

To decrease the cruising speed:

OJF055039

Follow either of these procedures:

- Move the lever down (to SET-) and hold it. Your vehicle will gradually slow down. Release the lever at the speed you want to maintain.
- Move the lever down (to SET-) and release it immediately. The cruising speed will decrease by 2 km/h (1.0 mph) each time the lever is operated in this manner.

To temporarily accelerate with the cruise control on:

If you want to speed up temporarily when the cruise control is on, depress the accelerator pedal. Increased speed will not interfere with the cruise control operation or change the set speed.

To return to the set speed, take your foot off the accelerator.

To cancel cruise control, do one of the following:

OJF055041

- Depress the brake pedal.
- Shift into N (Neutral) with an Automatic Transaxle.
- Press the CANCEL switch.
- Decrease the vehicle speed lower than the memory speed by 20 km/h (12 mph).
- Decrease the vehicle speed to less than approximately 25 km/h (15 mph).

Each of these actions will cancel cruise control operation (the SET indicator light in the instrument cluster will go off), but it will not turn the system off. If you wish to resume cruise control operation, move the lever up (to RES+). You will return to your previously preset speed.

To resume cruising speed at more than approximately 30 km/h (20 mph):

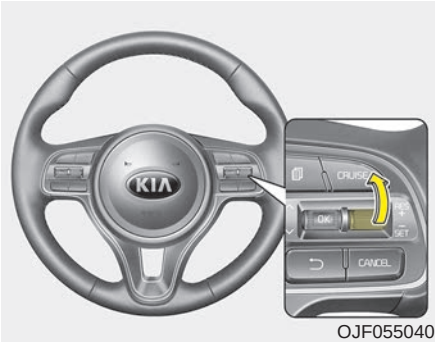

OJF055040

If any method other than the CRUISE ON-OFF switch was used to cancel cruising speed and the system is still activated, the most recent set speed will automatically resume when you move the lever up.

It will not resume, however, if the vehicle speed has dropped below approximately 30 km/h (20 mph).

To turn cruise control off, do one of the following:

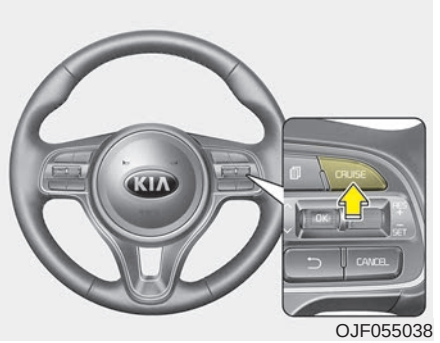

OJF055038

- Press the CRUISE button (the CRUISE indicator light in the instrument cluster will go off).
- Turn the engine start/stop button off.

Both of these actions will cancel the cruise control operation. If you want to resume the cruise control operation, repeat the steps provided in "To set cruise control speed" on the previous page.

SMART CRUISE CONTROL WITH STOP & GO SYSTEM (IF EQUIPPED)

OJF055089

① Cruise indicator
② Set speed
③ Vehicle-to-vehicle distance

The smart cruise control system allows you to program the vehicle to maintain a constant speed and distance to the vehicle ahead without depressing the accelerator or brake pedal.

⚠ WARNING

For your safety, please read the owner's manual before using the smart cruise control system.

⚠ WARNING

- Smart cruise control system Limitations

The smart cruise control system is a supplemental system and is not a substitute for safe driving practices. It is the responsibility of the driver to always check the speed and distance to the vehicle ahead.

✻ NOTICE

To activate smart cruise control, depress the brake pedal at least once after turning the ignition switch to the ON position or starting the engine. This is to check if the brake switch, which is an important part to cancelling smart cruise control, is in normal condition.

⚠ WARNING

- If the smart cruise control is left on, (cruise indicator in the instrument cluster illuminated) the smart cruise control can be activated unintentionally. Keep the smart cruise control system off (cruise indicator off) when the smart cruise control is not being used.
- Use the smart cruise control system only when traveling on open highways in good weather.
- Do not use the smart cruise control when it may not be safe to keep the car at a constant speed. For instance.
  - Highway interchange and tollgate
  - Road surrounded by multiple steel constructions (subway construction, steel tunnel, etc)

(Continued)

(Continued)

- Parking lot
- Lanes beside guard rail on a road
- Slippery road with rain, ice, or snow
- Abrupt curved road
- Steep hills
- Windy roads
- Off roads
- Rods under construction
- Rumble strip
- When driving near crash barriers
- When driving on a sharp curve
- When the vehicle sensing ability decreases due to vehicle modification resulting level difference of the vehicle's front and rear

(Continued)

(Continued)

- When driving in heavy traffic or when traffic conditions make it difficult to drive at a constant speed
- Limited visibility (rain, snow, smog, etc.)

- Pay particular attention to the driving conditions whenever using the smart cruise control system.
- Be careful when driving downhill using the SCC.
- Cruise function should not be used when the vehicle is being towed to prevent any damage.
- Always set the vehicle speed under the speed limit in your country.
- Always pay continuous attention to road and driving conditions even when the smart cruise control system is being operated.

Smart cruise control switch

CANCEL : Cancels cruise control operation.

CRUISE : Turns cruise control system on or off.

RES + : Resumes or increases cruise control speed.

SET - : Sets or decreases cruise control speed.

: Sets vehicle-to-vehicle distance

Smart Cruise Control speed

To set Smart Cruise Control Speed :

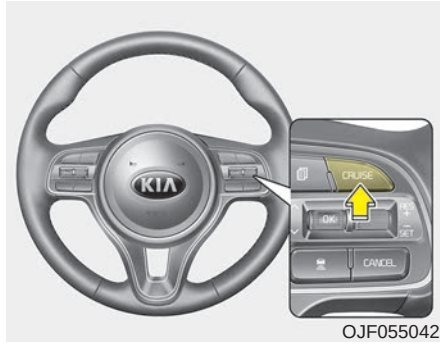

OJF055042

1. Press the CRUISE button, to turn the system on. The CRUISE indicator in the instrument cluster will illuminate.
2. Accelerate to the desired speed.

   The smart cruise control speed can be set as follows:

   - 30 km/h (20 mph) ~ 180 km/h (110 mph): when there is no vehicle in front
   - 0 km/h (0 mph) ~ 180 km/h (110 mph): when there is a vehicle in front

OJF055043

3. Move the lever down (to SET-), and release it at the desired speed. The set speed and vehicle to vehicle distance on the LCD screen will illuminate.
4. Release the accelerator pedal. The desired speed will automatically be maintained.

If there is a vehicle in front of you, the speed may decrease to maintain the distance to the vehicle ahead.

On a steep grade, the vehicle may slow down or speed up slightly while going uphill or downhill.

Vehicle speed may decrease on an upward slope and increase on a ownward slope.

The speed will be set to 30 km/h (20 mph) when there is a vehicle ahead and your vehicle speed is 0 km/h (0 mph) ~ 30 km/h (20 mph).

To increase cruise control set speed:

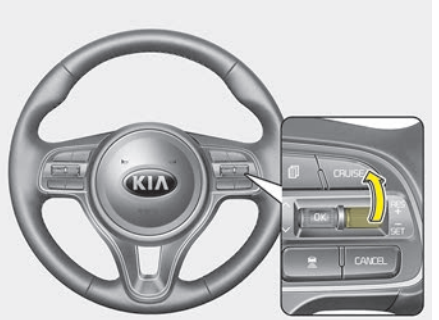

OJF055044

Follow either of these procedures:

- Move the lever up (to RES+), and hold it. Your vehicle set speed will increase by 10 km/h (5 mph). Release the lever at the speed you want.
- Move the lever up (to RES+), and release it immediately. The cruising speed will increase by 1.0 km/h (1.0 mph) each time you move the lever up (to RES+) in this manner.
- You can set the speed to 180 km/h (110 mph).

⚠ CAUTION

Check the driving condition before using the "RES+" or "SET-" lever.

Driving speed may sharply increase, when you push up and hold the lever.

To decrease the cruise control set speed:

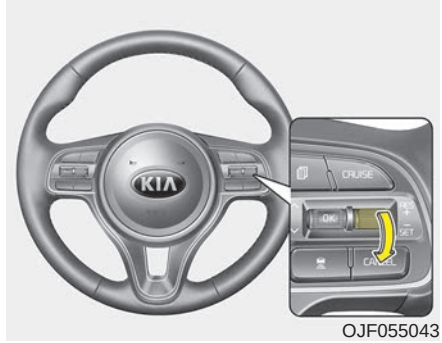

OJF055043

Follow either of these procedures:

- Move the lever down (to SET-), and hold it. Your vehicle set speed will decrease by 10 km/h (5 mph). Release the lever at the speed you want.
- Move the lever down (to SET-), and release it immediately. The cruising speed will decrease by 1.0 km/h (1.0 mph) each time you move the lever down (to SET-) in this manner.
- You can set the speed to 30 km/h (20 mph).

To temporarily accelerate with the cruise control on:

If you want to speed up temporarily when the cruise control is on, depress the accelerator pedal. Increased speed will not interfere with cruise control operation or change the set speed.

To return to the set speed, take your foot off the accelerator.

If you move the lever down (to SET-) at increased speed, the cruising speed will be set again.

✻ NOTICE

Be careful when accelerating temporarily, because the speed is not controlled automatically at this time even if there is a vehicle in front of you.

Smart cruise control will be temporarily canceled when:

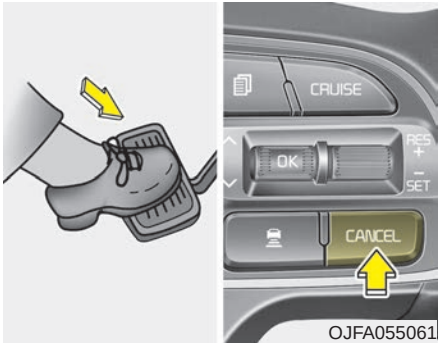

Cancelled manually

The smart cruise control is temporarily canceled when the brake pedal is depressed or the CANCEL button is pressed. Depress the brake pedal and press the CANCEL button at the same time, when the vehicle is at a standstill. The speed and vehicle to vehicle distance indicator on the cluster is disappeared and the CRUISE indicator is illuminated continuously.

Cancelled automatically

- The driver's door is opened.
- The shift lever is shifted to N (Neutral), R (Reverse) or P (Paking).
- The EPB (electronic parking brake) is applied.
- The vehicle speed is over 190 km/h (120 mph)
- The ESC, ABS or TCS is operating.
- The ESC is turned off.
- The sensor or the sensor's cover is dirty or blocked with foreign matter.
- When the vehicle is stopped for over 5 minutes.
- The driver starts driving by pushing the toggle switch up (RES+)/down (SET-) or depressing the accelerator pedal, after stopping the vehicle with a vehicle stopped far away in front.
- The engine rpm is in the red zone.
- The accelerator pedal is continuously depressed for long time.
- The SCC system has malfunctioned.
- When the braking control is operated for Forward Collision-Avoidance Assist(FCA).
- The driver starts driving by pushing the toggle switch up (RES+)/down (SET-) or depressing the accelerator pedal, after the vehicle is stopped by the Smart Cruise Control system with no other vehicle ahead.
- The vehicle stops and goes repeatedly for a long period of time.
- When the parking brake is locked.
- The engine performance is abnormal.

Each of these actions will cancel the smart cruise control operation. (the set speed and vehicle to vehicle distance on the LCD display will go off.) If the smart cruise control is cancelled automatically, the smart cruise control will not resume even though the RES+ or SET- lever is moved.

⚠ CAUTION

If the smart cruise control is cancelled by a reason not listed above in the "Cancelled automatically" section, have the system checked by an authorized Kia dealer.

OJF055235L

✻ NOTICE

If the system is automatically cancelled, the warning chime will sound and a message will appear for a few seconds.
You must adjust the vehicle speed by depressing the accelerator or brake pedal according to the road and driving conditions ahead.
Always check the road conditions. Do not rely on the warning chime.

To resume cruise control set speed:

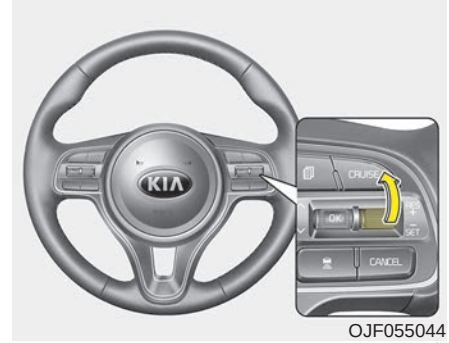

OJF055044

Reset

If any method other than the “RES+” or “SET-“ lever was used to cancel cruising speed and the system is still activated, the cruising speed will automatically resume when you push the lever up (RES+) or down (SET-).

If you push the lever up (RES+), the speed will resume to the recently set speed. However, if vehicle speed drops below 30 km/h (20 mph), it will resume when there is a vehicle in front of your vehicle.

✻ NOTICE

To reduce the risk of an accident, always check the road conditions when reactivating the smart cruise control using the RES+ lever to ensure the road conditions permit safe use of the cruise control.

⚠ WARNING
- Following Distance

- **To avoid collisions, always be aware of the selected speed and vehicle distance settings when activating your smart cruise control system.**
- **Always maintain sufficient braking distance and decelerate your vehicle by applying the brakes if necessary.**

To turn cruise control off:

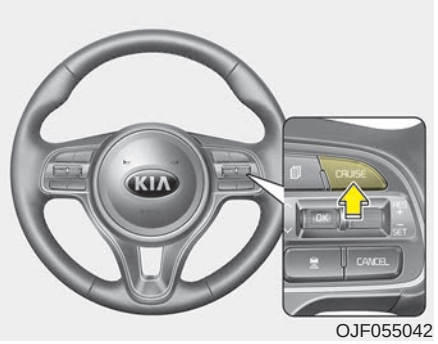

OJF055042

When the Smart Cruise Control System is not needed, press the [CRUISE] switch and deactivate the system.

- Press the CRUISE button (The CRUISE indicator light will go off.).

Vehicle to vehicle distance setting

To set vehicle to vehicle distance:

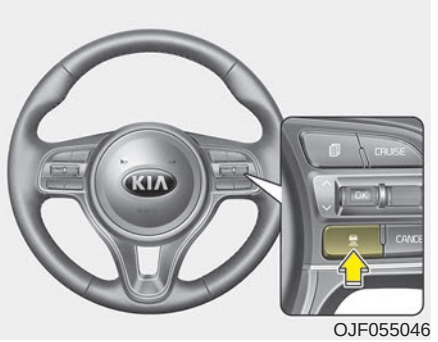

OJF055046

This function allows you to program the vehicle to maintain relative distance to the vehicle ahead without depressing the accelerator pedal or brake pedal.

The vehicle to vehicle distance will automatically activate when the smart cruise control system is on.

Select the appropriate distance according to road conditions and vehicle speed.

Each time the button is pressed, the vehicle to vehicle distance changes as follows:

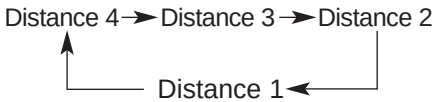

For example, if you drive at 90 km/h (56 mph), the distance maintain as follows;

Distance 4 - approximately 52.5 m (172 ft)

Distance 3 - approximately 40 m (130 ft)

Distance 2 - approximately 32.5 m (106 ft)

Distance 1 - approximately 25 m (82ft)

✻ NOTICE

The distance is set to the last set distance when the system is used for the first time after starting the engine.

When there is a vehicle ahead of you in your lane :

OJF055093

OJF055095

OJF055094

OJF055096

- The vehicle will maintain the set speed, when the lane ahead is clear.
- The vehicle will slow down or speed up to maintain the selected distance, when there is a vehicle ahead of you in the lane. (A vehicle will appear in front of your vehicle in the LCD display only when there is an actual vehicle in front of you)
- If the vehicle ahead speeds up, your vehicle will travel at a steady cruising speed after accelerating to the selected speed.

⚠ CAUTION

- ***The warning chime sounds and LCD display blinks if it is hard to maintain the selected distance to the vehicle ahead.***
- ***If the warning chime sounds, actively adjust the vehicle speed by depressing the brake pedal according to the road condition ahead and driving condition.***
- ***Even if the warning chime is not activated, always pay attention to the driving conditions to prevent dangerous situations from occurring.***
- ***Be alert to road conditions as radio, sound and outside conditions could interrupt a warning sound.***

OJFHP058476C

⚠ CAUTION

If the vehicle ahead (vehicle speed: less than (30 km/h (20 mph)) disappears to the next lane, the warning chime will sound and a message will appear. Adjust your vehicle speed for vehicles or objects that can suddenly appear in front of you by depressing the brake pedal according to the road and driving conditions ahead.

In traffic situation

OJFA056100CF

Use switch or pedal to accelerate

- In traffic, your vehicle will stop if the vehicle ahead of you stops. Also, if the vehicle ahead of you starts moving, your vehicle will start as well. However, if the vehicle stops you must depress the accelerator pedal or push up the toggle switch (RES+) to start driving.
- If you push the smart cruise control toggle switch (RES+ or SET-) while Auto Hold and smart cruise control is operating the Auto Hold will be released regardless of accelerator pedal operation and the vehicle will start to move. The AUTO HOLD indicator changes from green to white. (if equipped with EPB (Electronic Parking Brake))

Radar to detect distance to the vehicle ahead

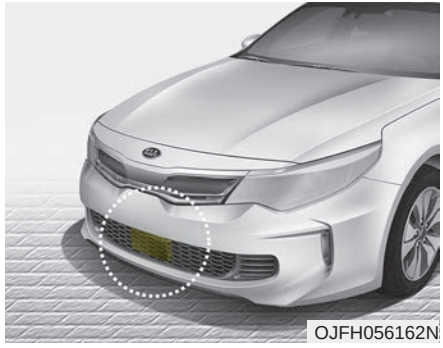

OJFH056162N

The sensor detects the distance to the vehicle ahead.

If the sensor is covered with dirt or other foreign matter, the vehicle to vehicle distance control may not operate correctly.

Always keep the area in front of the sensor clean.

Warning message

OJFHP058477N

When the sensor lens cover is blocked with dirt, snow, or debris, the Smart Cruise Control System operation may stop temporarily. If this occurs, a warning message will appear on the LCD display. Remove any dirt, snow, or debris and clean the radar sensor lens cover before operating the Smart Cruise Control System. The Smart Cruise Control system may not properly activate, if the radar is totally contaminated, or if any substance is not detected after turning ON the engine (e.g. in an open terrain).

SCC (Smart Cruise Control) malfunction message

OJF055237L

The message will appear when the vehicle to vehicle distance control system is not functioning normally.

In this case, take your vehicle to an authorized Kia dealer and have the system checked.

⚠ CAUTION

- ***Do not install accessories around the sensor and do not replace the bumper by yourself. It may interfere with the sensor performance.***
- ***Always keep the sensor and bumper clean.***
- ***Use only a soft cloth to wash the vehicle. Do not spray pressurized water directly on the sensor or sensor cover.***
- ***Be careful not to apply unnecessary force on the radar sensor or sensor cover. If the sensor is forcibly moved out of proper alignment, the Smart Cruise Control System may not operate correctly. In this case, a warning message may not be displayed.***

  Have the vehicle inspected by an authorized Kia dealer.

(Continued)

(Continued)

- ***Do not damage the sensor or sensor area by a strong impact. If the sensor moves slightly off position, the smart cruise control system will not operate correctly without any warning or indicator from the cluster. If this occurs, take your vehicle to an authorized Kia dealer and have the system checked.***
- ***Use only a genuine Kia sensor cover for your vehicle. Do not paint anything on the sensor cover.***
- ***If the front bumper becomes damaged in the area around the radar sensor, the Smart Cruise Control System may not operate properly.***

To adjust the sensitivity of smart cruise control

The sensitivity of vehicle speed when following the front vehicle to maintain the set distance can be adjusted. Go to the User Settings Mode (Driver Assistance) and select (SCC Reaction). You may select one of the three stages you prefer.

- Slow:

  Vehicle speed to the vehicle ahead to maintain the set distance is slower than normal speed.
- Normal:

  Vehicle speed to the vehicle ahead to maintain the set distance is normal
- Fast:

  Vehicle speed to the vehicle ahead to maintain the set distance is faster than normal speed.

✻ NOTICE

The last selected mode remains in the system.

To convert to cruise control mode:

OJF055238L

OJF055239L

The driver may choose to only use the cruise control mode (speed control function) by doing as follows:

1. Turn the smart cruise control system on (the cruise indicator light will be on but the system will not be activated).
2. Push the distance to distance switch for more than 2 seconds.
3. Choose between "Smart Cruise Control" and "Cruise Control".

When the system is canceled using the CRUISE button or the CRUISE button is used after the engine is turned on, the Smart Cruise Control mode will turn on.

⚠ WARNING

When using the cruise control mode, you must manually assess the distance to other vehicles as the system will not automatically brake to slow down for other vehicles.

Limitations of the system

The smart cruise control system may have limits to its ability to detect distance to the vehicle ahead due to road and traffic conditions.

On curves

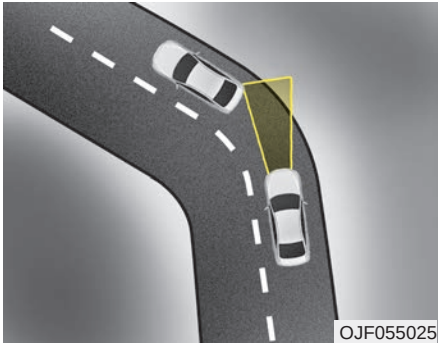

- On curves, the smart cruise control system may not immediately detect a moving vehicle in your lane, and then your vehicle could accelerate to the set speed. Also, the vehicle speed will rapidly decrease when the vehicle ahead is recognized suddenly.
- Select the appropriate set speed on curves and adjust your vehicle speed by depressing the accelerator or brake pedal according to the road and driving conditions ahead.

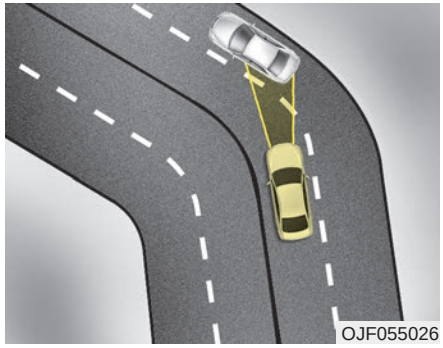
OJF055026

- Your vehicle speed can be reduced due to a vehicle in the adjacent lane. Adjust your vehicle speed by depressing the brake pedal according to the road and driving conditions ahead. Apply the accelerator pedal and select the appropriate set speed. Check to be sure that the road conditions permit safe operation of the smart cruise control.

On inclines

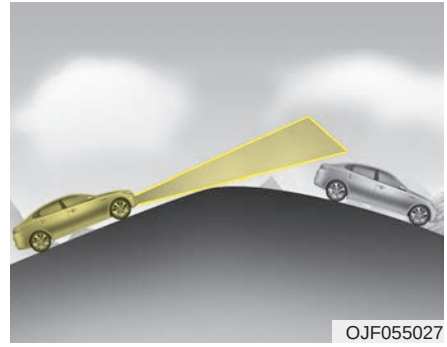
OJF055027

- During uphill or downhill driving, the smart cruise control system may not immediately detect a moving vehicle in your lane, and may cause your vehicle to accelerate to the set speed. Also, the vehicle speed will rapidly decrease when the vehicle ahead is recognized suddenly.
- Select the appropriate set speed on inclines and adjust your vehicle speed by depressing the accelerator or brake pedal according to the road and driving conditions ahead.

Lane changing

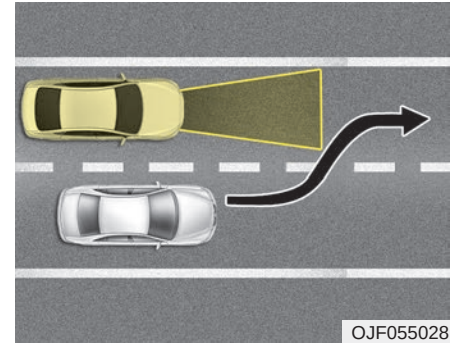
OJF055028

- A vehicle which moves into your lane from an adjacent lane cannot be recognized by the sensor until it is in the sensor's detection range.
- The sensor may not detect immediately when a vehicle cuts in suddenly. Always pay attention to the traffic, road and driving conditions.
- If a vehicle which moves into your lane is slower than your vehicle, your speed may decrease to maintain the distance to the vehicle ahead.

- If a vehicle which moves into your lane is faster than your vehicle, your vehicle will accelerate to the selected speed.

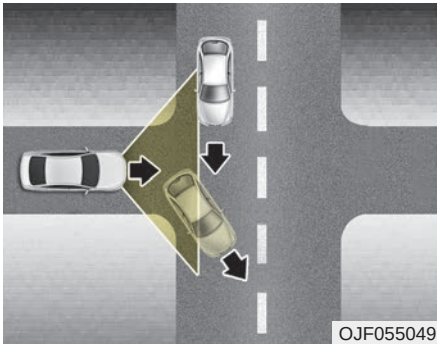
OJF055049

- Your vehicle may accelerate when a vehicle ahead of you disappears.
- When you are warned that the vehicle ahead of you is not detected, drive with caution.

Vehicle recognition

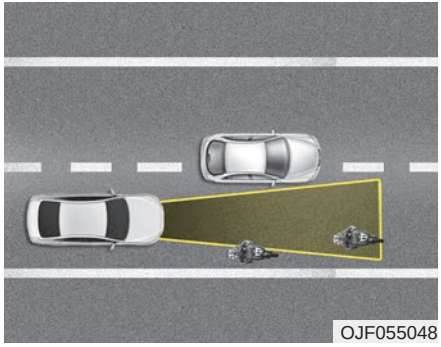
OJF055048

Some vehicles ahead in your lane cannot be recognized by the sensor as follows:

- Narrow vehicles such as motorcycles or bicycles
- Vehicles offset to one side
- Slow-moving vehicles or sudden-decelerating vehicles
- Stopped vehicles
- Vehicles with small rear profiles such as trailers with no loads

A vehicle ahead cannot be recognized correctly by the sensor if any of following occurs:

- When the vehicle is pointing upwards due to overloading in the trunk(tailgate)
- While making turns by steering
- When driving to one side of the lane
- When driving on narrow lanes or on curves

Adjust your vehicle speed by depressing the brake pedal according to the road condition ahead and driving condition.

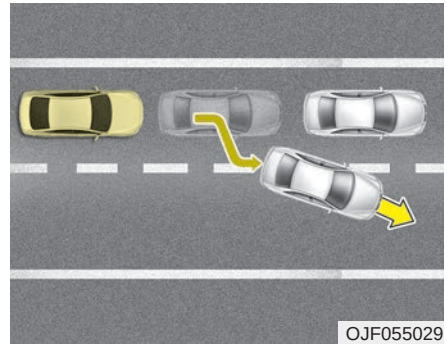
OJF055029

- When vehicles are at a standstill and the vehicle in front of you changes to the next lane, be careful when your vehicle starts to move because it may not immediately recognize the stopped vehicle in front of you.

In this case, you must maintain a safe braking distance, and if necessary, depress the brake pedal to reduce your driving speed in order to maintain a safe distance.

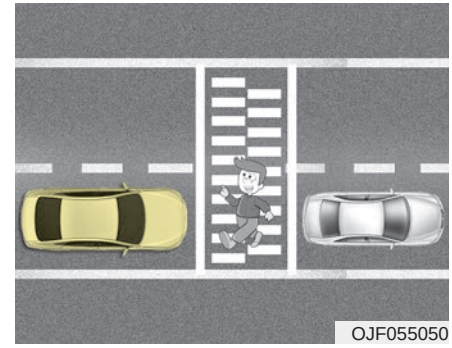
OJF055050

- Always look out for pedestrians when your vehicle is maintaining a distance with the vehicle ahead.

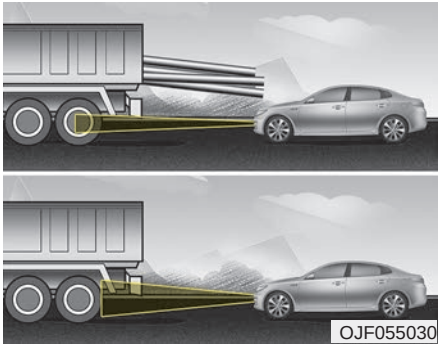

- Always be cautious when approaching vehicles that are taller with higher clearance, or vehicles carrying loads that stick out of the back of the vehicle.

⚠ WARNING

When using the Smart Cruise Control take the following precautions:

- **If an emergency stop is necessary, you must apply the brakes. The vehicle cannot be stopped at every emergency situation by using the Smart Cruise Control system.**
- **Keep a safe distance according to road conditions and vehicle speed. If the vehicle to vehicle distance is too close during a high-speed driving, a serious collision may result.**
- **Always maintain sufficient braking distance and decelerate your vehicle by applying the brakes if necessary.**
- **The Smart Cruise Control system cannot recognize a stopped vehicle, pedestrians or an oncoming vehicle.**

(Continued)

(Continued)

Always look ahead cautiously to prevent unexpected and sudden situations from occurring.

- **Vehicles moving in front of you with a frequent lane change may cause a delay in the system's reaction or may cause the system to react to a vehicle actually in an adjacent lane.**

  Always drive cautiously to pre-vent unexpected and sudden situations from occurring.
- **Always be aware of the selected speed and vehicle to vehicle distance. The driver should not solely rely on the system but always pay attention to driving conditions and control your vehicle speed.**

(Continued)

(Continued)

- **The Smart Cruise Control system may not recognize complex driving situations so always pay attention to driving conditions and control your vehicle speed.**
- **For safe operation, carefully read and follow the instructions in this manual before use.**

✻ NOTICE

The Smart Cruise Control System may not operate temporarily due to:

- **Electrical interference.**
- **Modifying the suspension.**
- **Differences of tire abrasion or tire pressure.**
- **Installing different type of tires.**

This device complies with Industry Canada licence-exempt RSS standard(s).

Operation is subject to the following conditions:

(1) This device may not cause interference, and

(2) This device must accept any interference, including interference that may cause undesired operation of the device.

(3) Changes or modifications not expressly approved by the party responsible for compliance could void the user's authority to operate the device.

DRIVE MODE INTEGRATED CONTROL SYSTEM (IF EQUIPPED)

Hybrid vehicle

■ Type A

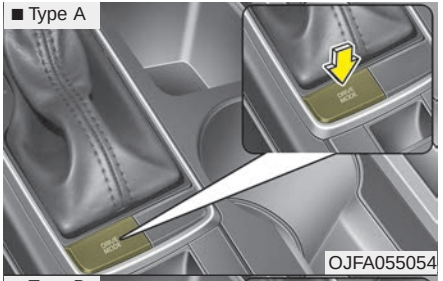

OJFA055054

■ Type B

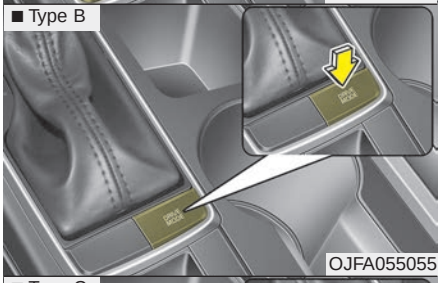

OJFA055055

■ Type C

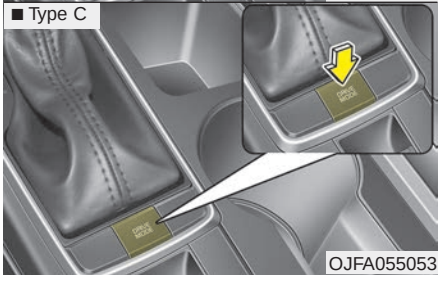

OJFA055053

The drive mode may be selected according to the driver's preference or road condition.

The system resets to the ECO mode when the hybrid system is restarted.

If there is a problem with the instrument cluster, the drive mode will be in ECO mode and may not change to NORMAL mode or SPORT mode.

The mode changes whenever the DRIVE MODE button is pressed.

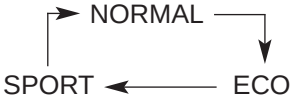

❊ When normal mode is selected, it is not displayed on the cluster.

ECO mode (Active ECO)

ECO

Active ECO is designed to help improve fuel efficiency by controlling certain engine and transaxle system operating parameters. Fuel efficiency depends on the driver's driving habit and road condition.

- When the DRIVE MODE button is pressed and the ECO mode is selected, the ECO indicator (green) will illuminate to show that Active ECO is operating.
- When Active ECO is activated, it does not turn off even though the engine is restarted again. To turn off the system, press the DRIVE MODE button again.

When Active ECO is activated:

- The acceleration may slightly be reduced even though you depress the accelerator fully.
- The air conditioner performance may be limited
- The shift pattern of the automatic transaxle may change.
- The engine noise may get louder.

The above situations are normal conditions when the Active Eco System is activated to help improve fuel efficiency in certain situations.

Limitation of Active ECO operation:

If the following conditions occur while Active ECO is operating, the system operation is limited even though there is no change in the ECO indicator.

- When the coolant temperature is low:

  The system will be limited until engine performance becomes normal.
- When driving up a hill:

  The system will be limited to gain power when driving uphill because the engine torque is restricted.
- When using manual mode:

  The system will be limited according to the shift location.
- When the accelerator pedal is deeply depressed for a few seconds:

  The system will be limited, judging that the driver wants to speed up.

SPORT mode

SPORT

SPORT mode focuses on dynamic driving by automatically adjusting the steering wheel, engine and transaxle system.

- When the DRIVE MODE button is pressed and the SPORT mode is selected, the SPORT indicator (yellow) will illuminate.
- Whenever the hybrid system is restarted, the Drive Mode will revert back to ECO mode. If SPORT mode is desired, re-select SPORT mode from the DRIVE MODE button.
- If the system is activated:
  - While holding vehicle speed, it maintains the gear and RPM for some time even though the accelerator pedal is not depressed.
  - Up-shifting is delayed.

✻ NOTICE

In Sport drive mode, the fuel efficiency may decrease.

ACTIVE ECO SYSTEM (IF EQUIPPED)

Plug-in hybrid vehicle

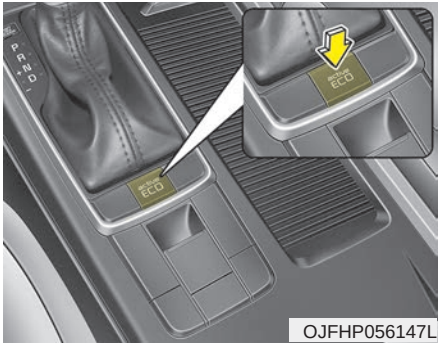

OJFHP056147L

The drive mode may be selected according to the driver's preference or road condition.

The system resets to be in the ECO mode, when the hybrid system is restarted.

If there is a problem with the instrument cluster, the drive mode will be in ECO mode and may not change to NORMAL mode.

The mode changes whenever the DRIVE MODE button is pressed.

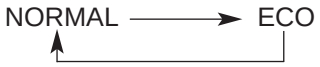

❊ When normal mode is selected, it is not displayed on the cluster.

ECO mode (Active ECO)

ECO

Active ECO is designed to helps improve fuel efficiency by controlling certain engine and transaxle system operating parameters. Fuel efficiency depends on the driver's driving habit and road condition.

- When the DRIVE MODE button is pressed and the ECO mode is selected, the ECO indicator (green) will illuminate to show that Active ECO is operating.
- When Active ECO is activated, it does not turn off even though the engine is restarted again. To turn off the system, press the DRIVE MODE button again.

When Active ECO is activated:

- The acceleration may slightly be reduced eventhough you depress the accelerator fully.
- The air conditioner performance may be limited
- The shift pattern of the automatic transaxle may change.
- The engine noise may get louder.

The above situations are normal conditions when the active eco system is activated to improve fuel efficiency.

Limitation of Active ECO operation:

If the following conditions occur while Active ECO is operating, the system operation is limited even though there is no change in the ECO indicator.

- When the coolant temperature is low:

  The system will be limited until engine performance becomes normal.
- When driving up a hill:

  The system will be limited to gain power when driving uphill because the engine torque is restricted.
- When using manual mode:

  The system will be limited according to the shift location.
- When the accelerator pedal is deeply depressed for a few seconds:

  The system will be limited, judging that the driver wants to speed up.

BLIND-SPOT COLLISION WARNING (BCW) (IF EQUIPPED)

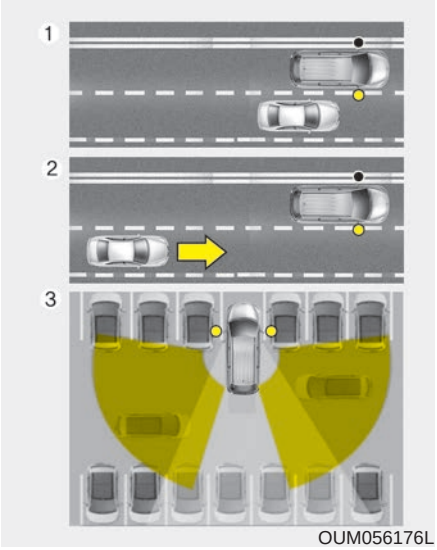

The Blind-Spot Collision Warning (BCW) system uses radar sensors in the rear bumper to monitor and warn the driver of an approaching vehicle in the driver's blind spot area.

The system monitors the rear area of the vehicle and provides information to the driver with an audible alert and a indicator on the outside rearview mirrors.

⚠ WARNING

- **Always be aware of road conditions while driving and be alert for unexpected situations even though the BCW system is operating.**
- **The BCW is not a substitute for proper and safe driving. Always drive safely and use caution when changing lanes or backing up the vehicle. The BCW may not detect every object alongside the vehicle.**

(1) Blind spot area

The BCW range varies relative to vehicle speed. Note that if your vehicle is traveling much faster than the vehicles around you, the warning will not occur.

(2) Closing at high speed

The BCW-Closing at high speed feature will alert you when a vehicle is approaching in an adjacent lane at a high rate of speed. If the driver activates the turn signal when the system detects an oncoming vehicle, the system sounds an audible alert. Distance from approaching vehicle can be seen differently according to the relative speed.

(3) RCCW (Rear Cross-Traffic Collision Warning)

The RCCW feature monitors approaching cross traffic from the left and right side of the vehicle when your vehicle is in reverse. The feature will operate when the vehicle is moving in reverse below about 10 km/h (6 mph). If oncoming cross traffic is detected a warning chime will sound. Distance from approaching vehicle can be seen differently according to the relative speed.

⚠ WARNING

- **Always check the road condition while driving for unexpected situations even though the BCW (Blind-Spot Collision Warning) system is operating.**
- **BCW (Blind-Spot Collision Warning) system is a system made for convenience. Do not solely rely on the system but always pay attention to drive safely.**
- **Distance from the approaching vehicle can be seen differently according to the relative speed.**

BCW (Blind-Spot Collision Warning) / LCA (Lane Change Assist)

Operating conditions

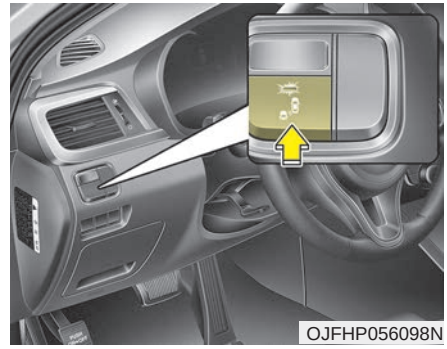
OJFHP056098N

The indicator on the switch will illuminate when the BCW (Blind-Spot Collision Warning) system switch is pressed with the ignition switch ON. If the vehicle speed exceeds 30 km/h (20 mph), the system will activate.

If you press the switch again, the switch indicator and system will be turned off.

If the ignition switch is turned OFF and ON the system returns to the previous state.

When the system is not used turn the system off by pressing the switch.

When the system is turned on the warning light will illuminate for 3 seconds on the outside rearview mirror.

Warning type

The system will activate when:

1. The system is on
2. Vehicle speed is above 30 km/h (20 mph)
3. Other vehicles are detected in the rear side

⚠ WARNING

- **Always check the road condition while driving for unexpected situations even though the Blind-Spot Collision Warning System (BCW) is operating.**
- **The Blind-Spot Collision Warning System (BCW) is a supplemental system to assist you. Do not entirely rely on the system. Always pay attention, while driving, for your safety.**

(Continued)

(Continued)

- **The Blind-Spot Collision Warning System (BCW) is not a substitute for proper and safe driving. Always drive safely and use caution when changing lanes or backing the vehicle up. The Blind-Spot Collision Warning System (BCW) may not detect every object alongside the vehicle.**

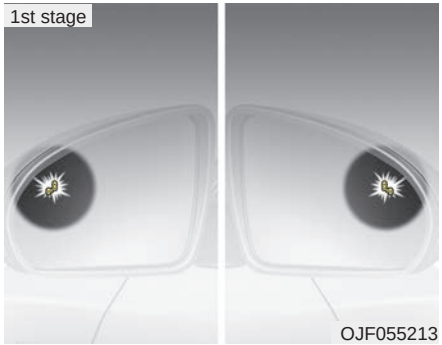

First stage alert

If a vehicle is detected within the boundary of the system, a yellow warning light will illuminate on the outside rearview mirror.

Once the detected vehicle is no longer within the blind spot area, the warning will turn off according to the driving conditions of the vehicle.

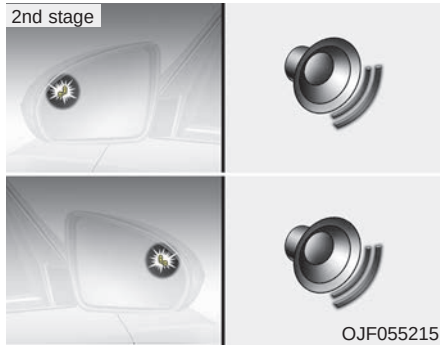

Second stage alert

A warning chime to alert the driver will activate when:

1. A vehicle has been detected in the blind spot area by the radar system (the warning light will illuminate on the outside rearview mirror (i.e., in the first stage alert)

   AND

2. The turn signal is applied (same side as where the vehicle is being detected).

When this alert is activated, the warning light on the outside rearview mirror will also blink.

If you turn off the turn signal indicator, the second stage alert (the warning chime and the blinking warning light on the outside rearview mirror) will be deactivated.

- The second stage alarm can be deactivated.

• To activate the alarm:

  Go to the User Settings Mode → Driver Assistance and select “Blind-Spot Collision Warning” on the LCD display.

• To deactivate the alarm:

  Go to the User Settings Mode → Driver Assistance and deselect “Blind-Spot Collision Warning” on the LCD display.

⚠ CAUTION

The warning chime function helps alert the driver. Deactivate this function only when it is necessary, refer to “User Settings Mode” in chapter 4.

Detecting sensor

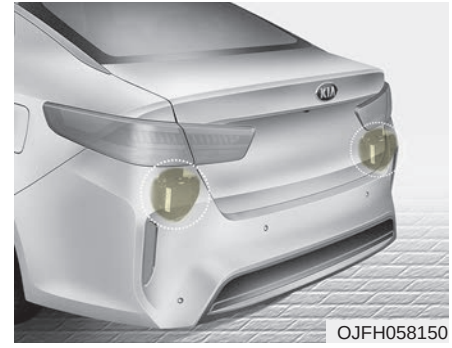

The sensors are located inside the rear bumper.

Always keep the rear bumper clean for the system to work properly.

RCCW (Rear Cross-Traffic Collision Warning) (if equipped)

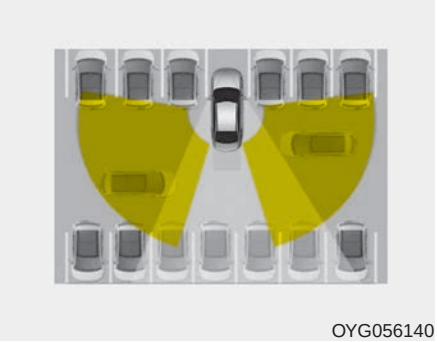

OYG056140

The Rear Cross-Traffic Collision Warning function monitors approaching cross traffic from the left and right side of the vehicle when your vehicle is in reverse.

Operating conditions To operate

- Go to “User Settings → Driving Assist and select Rear-Cross Traffic Collision Warning” on the LCD display.

  The system will turn on and stand-by to activate. If you deactivate this function in the cluster, the system will stop.

❊For more information, refer to “LCD Display” in chapter 4.

✻ NOTICE

- **If the vehicle is turned off and on again, the RCCW system will return to the state right before the vehicle was turned off.**
- **The system will activate when vehicle speed is below 10 km/h (6.2 mph) and with the shift lever in R (Reverse).**
- **The Rear Cross-Traffic Collision Warning (RCCW) detecting range is approximately 0.5 m ~ 20 m (1 ft ~ 65 ft) in the direction of both lateral sides of the car.**
  An approaching vehicle will be detected if their vehicle speed is within 4 km/h ~ 36 km/h (2.5 ~ 22.5 mph).
  Note that the detecting range may vary under certain conditions. As always, use caution and pay close attention to your surroundings when backing up your vehicle.

Warning type

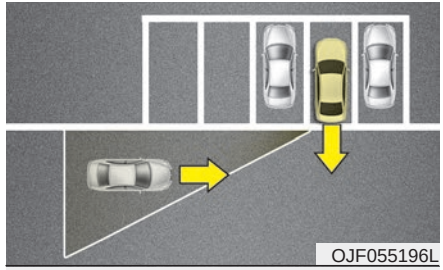

OJF055196L

OJFHP058478N

OJFHP058485N

If the vehicle detected by the sensors approaches your vehicle, the warning chime will sound, the warning light on the outside rearview mirror will blink and a message will appear on the LCD display.

✻ NOTICE

- **The warning chime will turn off:**
  - **When the detected vehicle moves out of the sensing area or**
  - **If your vehicle is moved away from the detected vehicle or**
  - **When the vehicle is right behind your vehicle or**
  - **When the vehicle is not approaching your vehicle or**
  - **When the other vehicle slows down.**
- **The system may not operate properly due to other factors or circumstances.**
  Always pay attention to your surroundings.
- **If the sensing area near the rear bumper is blocked by either a wall or barrier or by a parked vehicle, the system sensing area may be reduced.**

⚠ WARNING

- **When the BCW system is being activated, The warning light on the outside rearview mirror will illuminate whenever a vehicle is detected at the rear side by the system.**

  To avoid accidents, do not focus only on the warning light and neglect to see the surrounding of the vehicle.
- **Drive safely even though the vehicle is equipped with a BCW (Blind-Spot Collision Warning) system. Do not solely rely on the system but check for yourself before changing lanes.**

  The system may not alert the driver in some conditions so always check the surroundings while driving.

(Continued)

(Continued)

- **The Blind-Spot Collision Warning system (BCW) and Rear Cross-Traffic Collision Warning (RCCW) are not a substitute for proper and safe driving practices. Always drive safely and use caution when changing lanes or backing up your vehicle. The Blind-Spot Collision Warning system (BCW) may not detect every object alongside the vehicle.**

⚠ CAUTION

- ***The system may not work properly if the bumper has been replaced or if a repair work has been done near the sensor.***
- ***The detection area differs according to the roads width. If the road is narrow the system may detect other vehicles in the second next lane.***
- ***On the contrary, if the road is very wide the system may not detect other vehicles in the next lane.***
- ***The system might be turned off due to strong electromagnetic waves.***

Warning message

The sensor may be limited when the below conditions.

If there is a problem with the BCW system, a warning message will appear and the light on the switch will turn off. The system will turn off automatically.

- One or both of the sensors on the rear bumper is blocked by dirt or snow or a foreign object.
- Driving in rural areas where the BCW sensor does not detect another vehicle for an extended period of time.
- When there is inclement weather such as heavy snow or rain.
- A trailer or carrier is installed. (To use the BCW system, remove the trailer or carrier from your vehicle.)

Turn off the system by pressing the BCW switch and deselecting Rear Cross-Traffic Collision Warning (RCCW) from the User Settings mode on the cluster, when using a trailer or carrier behind your vehicle.

If any of these conditions occur, the light on the BCW switch and the system will turn off automatically.

When the BCW canceled warning message is displayed in the cluster, check to make sure that the rear bumper is free from any dirt or snow in the areas where the sensor is located. Remove any dirt, snow, or foreign material that could interfere with the radar sensors.

After any dirt or debris is removed, the BCW system should operate normally after about 10 minutes of driving the vehicle.

If the system still does not operate normally, have your vehicle inspected by an authorized Kia dealer.

OJFHP058480N

If the system does not work properly, a warning message will appear and the light on the switch will turn off. The system will turn off automatically.

In this case, take your vehicle to an authorized Kia dealer and have the system checked.

Non-operating condition

The BCW indicator on the outside rearview mirror may not illuminate properly when:

- The outside rearview mirror housing is damaged.
- The mirror is covered with dirt, snow, or debris.
- The window is covered with dirt, snow, or debris.
- The window is tinted.

Driver's Attention

The driver must be cautious in the below situations, because the system may not detect other vehicles or objects in certain circumstances.

- **When a trailer or carrier is installed.**
- **The vehicle drives in inclement weather such as heavy rain or snow.**
- **The sensor is polluted with rain, snow, mud, etc.**
- **The rear bumper where the sensor is located is covered with a foreign object such as a bumper sticker, a bumper guard, a bike rack, etc.**
- **The rear bumper is damaged, or the sensor is out of the original default position.**
- **The vehicle height gets lower or higher due to heavy loading in the luggage compartment, abnormal tire pressure, etc.**
- **When the temperature near the rear bumper area is high or low.**

(Continued)

(Continued)

- **When the sensors are blocked by other vehicles, walls or parking-lot pillars.**
- **The vehicle drives on a curved road or through a tollgate.**
- **The vehicle is driven near areas containing metal substances such as a construction zone, railroad, etc.**
- **There is a fixed object near the vehicle, such as a guardrail, person, animal, etc.**
- **While going down or up a steep road where the height of the lane is different.**
- **When driving through a narrow road with many trees or bushes.**
- **When driving on wet surfaces.**
- **When driving through a large area with few vehicles or structures around, such as a desert, rural area, etc.**
- **A big vehicle is near such as a bus or truck.**

(Continued)

(Continued)

- **When other vehicles are close to your vehicle.**
- **When the other vehicle approaches very close.**
- **When the detected vehicle also moves back, as your vehicle drives back.**
- **While changing lanes.**
- **If the vehicle has started at the same time as the vehicle next to you and has accelerated.**
- **When the other vehicle passes at a very fast speed.**
- **When the vehicle in the next lane moves two lanes away from you OR when the vehicle two lanes away moves to the next lane to you.**
- **The vehicle is turning left or right at a crossroads.**
- **A motorcycle or bicycle is near.**
- **A flat trailer is near.**

(Continued)

(Continued)

- **If there are small objects in the detecting area such as a shopping cart, a baby stroller or pedestrian.**
- **If there is a low height vehicle such as a sports car.**

This device complies with Industry Canada licence-exempt RSS standard(s).

Operation is subject to the following conditions:

(1) This device may not cause interference, and

(2) This device must accept any interference, including interference that may cause undesired operation of the device.

(3) Changes or modifications not expressly approved by the party responsible for compliance could void the user's authority to operate the device.

LANE DEPARTURE WARNING (LDW) SYSTEM (IF EQUIPPED)

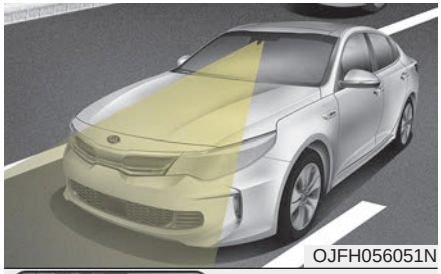
OJFH056051N

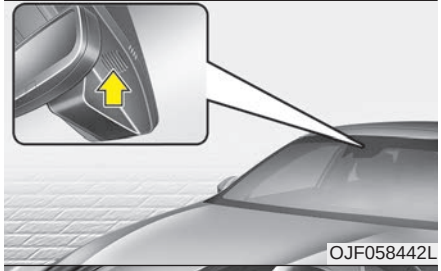
OJF058442L

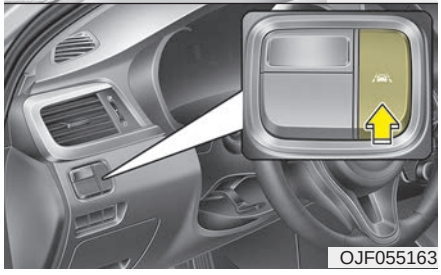
OJF055163

This system is designed to detect the lane in which the vehicle is traveling by using a sensor at the front windshield. In certain situations, the system will warn you when your vehicle is leaving its lane.

⚠ WARNING

- **The LDW does not make the vehicle change lanes. It is the driver's responsibility to always check the road conditions.**
- **Do not turn the steering wheel suddenly when the LDW warns you that your vehicle is leaving the lane.**
- **If the sensor cannot detect the lane or if the vehicle speed does not exceed around 64 km/h (40 mph), the LDW won't warn you even though the vehicle leaves the lane.**
- **If your vehicle has window tint or other types of coating and accessories on the front windshield, the LDW may not work properly.**

(Continued)

(Continued)

- **Do not let water or any kind of liquid come in contact with the LDW sensor.**
- **Do not remove or damage the related parts of LDW.**
- **Do not put objects that reflect light on the dash board.**
- **Always check road conditions due to the sound you may not hear the warning chime because of audio or external noise conditions.**

LDW operation

To operate the LDW, press the switch with the ignition in the ON position. The indicator illuminates white on the cluster.

To cancel the LDW, press LDW button again. The indicator on the cluster will go off.

OJFHP058481N

If your vehicle leaves the lane when the LDW is operating and vehicle speed exceeds around 64 km/h (40 mph), the warning operates as follows:

■ Left lane departure warning

OJFHP058482N

■ Right lane departure warning

OJFHP058483N

1. Visual warning

If you leave a lane, the lane you cross will blink (yellow) and LDW indicator will blink green on LCD during 3 seconds.

2. Auditory warning

If you leave the lane, the warning sound operates for maximum 3 seconds.

The color of symbol ( ) will change depending on the condition of LDW system.

- White color : When you activate the lane departure warning system by pressing the LDW button, system operating conditions are not satisfied or the sensor does not detect the lane line
- Green color : When you activate the lane departure warning system by pressing the LDW button, system operating conditions are satisfied and the sensor can detect the lane line
- Yellow color : When there is a malfunction with the lane departure warning system.

Warning indicator

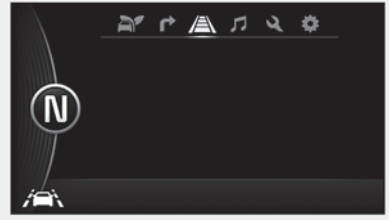

OJFHP058486N

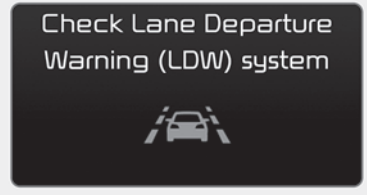

OJFHP058484N

When the LDW is not working properly, the warning light will illuminate and the warning message will come on for a few second. After the message disappears, the master warning light will illuminate.

Take your vehicle to an authorized Kia dealer and have the system checked.

The LDW does not operate when:

- The driver turns on the turn signal or the hazard warning flasher to change lane.
- Driving on the lane line.

✻ NOTICE

To change lanes, operate the turn signal switch, then change the lane.

The LDW may not warn you even if the vehicle leaves the lane, or may warn you even if the vehicle does not leave the lane when:

- The lane is not visible due to snow, rain, stain, a puddle or many other things.
- The brightness of the outside changes suddenly.
- The headlights are off at night or in a tunnel.
- The color of the lane marking from the road is difficult to distinguish.
- Driving on a steep grade or a curve.
- Light reflects from water on the road.
- The lens or windshield is stained with foreign matter.
- The sensor cannot detect the lane because of fog, heavy rain or heavy snow.
- The surrounding temperature of the inside rear view mirror is high due to a direct ray of light.
- The lane is very wide or narrow.
- The lane line is damaged or indistinct.
- A shadow is on the lane line caused by a median strip.
- There is a mark similar to a lane line.
- There is a boundary structure.
- There is not enough distance between you and the vehicle in front to be able to detect the lane marker or the vehicle ahead is driving on the lane marker.
- The vehicle shakes heavily.
- The lane number increases or decreases or the lane lines are crossing complicatedly.
- Putting something on the dashboard.
- Driving with the sun in front of you.
- Driving in areas under construction.
- There are more than two lane markers.
- The windshield is fogged by humid air in the vehicle.

This device complies with Industry Canada licence-exempt RSS standard(s).

Operation is subject to the following two conditions:

(1) This device may not cause interference, and

(2) This device must accept any interference, including interference that may cause undesired operation of the device..

ECONOMICAL OPERATION

Your vehicle's fuel economy depends mainly on your style of driving, where you drive and when you drive.

Each of these factors affects how many miles (kilometers) you can get from a gallon (liter) of fuel. To operate your vehicle as economically as possible, use the following driving suggestions to help save money in both fuel and repairs:

- Drive smoothly. Accelerate at a moderate rate. Don't make "jack-rabbit" starts or full-throttle shifts and maintain a steady cruising speed. Don't race between stop-lights. Try to adjust your speed to the traffic so you don't have to change speeds unnecessarily.
- Avoid heavy traffic whenever possible. Always maintain a safe distance from other vehicles so you can avoid unnecessary braking. This also reduces brake wear.
- Drive at a moderate speed. The faster you drive, the more fuel your vehicle uses. Driving at a moderate speed, especially on the highway, is one of the most effective ways to reduce fuel consumption.
- Don't "ride" the brake pedal. This can increase fuel consumption and also increase wear on these components. In addition, driving with your foot resting on the brake pedal may cause the brakes to overheat, which reduces their effectiveness and may lead to more serious consequences.
- Take care of your tires. Keep them inflated to the recommended pressure. Incorrect inflation, either too much or too little, results in unnecessary tire wear. Check the tire pressures at least once a month.
- Be sure that the wheels are aligned correctly. Improper alignment can result from hitting curbs or driving too fast over irregular surfaces. Poor alignment causes faster tire wear and may also result in other problems as well as greater fuel consumption.
- Keep your vehicle in good condition. For better fuel economy and reduced maintenance costs, maintain your vehicle in accordance with the maintenance schedule in chapter 8. If you drive your vehicle in severe conditions, more frequent maintenance is required (see chapter 8 for details).
- Keep your vehicle clean. For maximum service, your vehicle should be kept clean and free of corrosive materials. It is especially important that mud, dirt, ice, etc. not be allowed to accumulate on the underside of the vehicle. This extra weight can result in increased fuel consumption and also contribute to corrosion.
- Travel lightly. Don't carry unnecessary weight in your vehicle. Weight reduces fuel economy.
- Don't let the engine idle longer than necessary. If you are waiting (and not in traffic), turn off your engine and restart only when you're ready to go.

- Remember, your vehicle does not require extended warm-up. After the engine has started, allow the engine to run for 10 to 20 seconds prior to placing the vehicle in gear. In very cold weather, however, give your engine a slightly longer warm-up period.
- Don't "lug" or "over-rev" the engine. Lugging is driving too slowly in a very high gear resulting in engine bucking. If this happens, shift to a lower gear. Over-revving is racing the engine beyond its safe limit. This can be avoided by shifting at the recommended speed.
- Use your air conditioning sparingly. The air conditioning system is operated by engine power so your fuel economy is reduced when you use it.
- Opening windows at high speeds can reduce fuel economy.
- Fuel economy is less in crosswinds and headwinds. To help offset some of this loss, slow down when driving in these conditions.

Keeping a vehicle in good operating condition is important both for economy and safety. Therefore, have an authorized Kia dealer perform scheduled inspections and maintenance.

⚠ WARNING - Engine off during motion

Never turn the engine off to coast down hills or anytime the vehicle is in motion. The power steering and power brakes will not function properly without the engine running. In addition, turning off the engine start/stop button while driving could engage the steering wheel lock resulting in loss of vehicle steering. Keep the engine on and downshift to an appropriate gear for an engine braking effect.

SPECIAL DRIVING CONDITIONS

Hazardous driving conditions

When hazardous driving conditions are encountered such as water, snow, ice, mud, sand, or similar hazards, follow these suggestions:

- Drive cautiously and allow extra distance for braking.
- Avoid sudden braking or steering.
- When braking with non-ABS brakes pump the brake pedal with a light up-and-down motion until the vehicle is stopped.

Do not pump the brake pedal on a vehicle equipped with ABS.

- If stalled in snow, mud, or sand, use the second gear. Accelerate slowly to avoid spinning the drive wheels.
- Use sand, rock salt, or other non-slip material under the drive wheels to provide traction when stalled in ice, snow, or mud.

⚠ WARNING - Downshifting

Do not downshift with an automatic transaxle while driving on slippery surfaces. The sudden change in tire speed could cause the tires to skid and result in an accident.

Rocking the vehicle

If it is necessary to rock the vehicle to free it from snow, sand, or mud, first turn the steering wheel right and left to clear the area around your front wheels. Then, shift back and forth between R (Reverse) and any forward gear in vehicles equipped with an Automatic Transaxle. Do not race the engine, and spin the wheels as little as possible. If you are still stuck after a few tries, have the vehicle pulled out by a tow vehicle to avoid engine overheating and possible damage to the transaxle.

⚠ WARNING - Sudden Vehicle Movement

Do not attempt to rock the vehicle if people or objects are nearby. The vehicle may suddenly move forward or backwards as it becomes unstuck.

⚠ **CAUTION - Vehicle rocking**

Prolonged rocking may cause engine overheating, transaxle damage or failure, and tire damage.

⚠ **CAUTION - Spinning tires**

Do not spin the wheels, especially at speeds more than 35 mph (56 km/h). Spinning the wheels at high speeds when the vehicle is stationary could cause a tire to overheat which could result in tire damage that may injure bystanders.

The ESC system should be turned OFF prior to rocking the vehicle.

Smooth cornering

OJFH058062L

Avoid braking or gear changing in corners, especially when roads are wet. Ideally, corners should always be taken under gentle acceleration. If you follow these suggestions, tire wear will be held to a minimum.

Driving at night

OJF055063L

Because night driving presents more hazards than driving in the daylight, here are some important tips to remember:

- Slow down and keep more distance between you and other vehicles, as it may be more difficult to see at night, especially in areas where there may not be any street lights.

- Adjust your mirrors to reduce the glare from other driver's headlights.
- Keep your headlights clean and properly aimed. (On vehicles not equipped with the automatic headlight aiming feature.) Dirty or improperly aimed headlights will make it much more difficult to see at night.
- Avoid staring directly at the headlights of oncoming vehicles. You could be temporarily blinded, and it will take several seconds for your eyes to readjust to the darkness.

Driving in the rain

OJFH056064N

Rain and wet roads can make driving dangerous, especially if you’re not prepared for the slick pavement. Here are a few things to consider when driving in the rain:

- A heavy rainfall will make it harder to see and will increase the distance needed to stop your vehicle, so slow down.
- Keep your windshield wiping equipment in good shape. Replace your windshield wiper blades when they show signs of streaking or missing areas on the windshield.
- If your tires are not in good condition, making a quick stop on wet pavement can cause a skid and possibly lead to an accident. Be sure your tires are in good shape.
- Turn on your headlights to make it easier for others to see you.
- Driving too fast through large puddles can affect your brakes. If you must go through puddles, try to drive through them slowly.
- If you believe you may have gotten your brakes wet, apply them lightly while driving until normal braking operation returns.

Driving in flooded areas

Avoid driving through flooded areas unless you are sure the water is no higher than the bottom of the wheel hub. Drive through any water slowly. Allow adequate stopping distance because brake performance may be affected.

After driving through water, dry the brakes by gently applying them several times while the vehicle is moving slowly.

Driving off-road

Drive carefully off-road because your vehicle may be damaged by rocks or roots of trees. Become familiar with the off-road conditions where you are going to drive before you begin driving.

Highway driving

Tires

Adjust the tire inflation pressures to specification. Low tire inflation pressures will result in overheating and possible failure of the tires.

Avoid using worn or damaged tires which may result in reduced traction or tire failure.

Never exceed the maximum tire inflation pressure shown on the tires.

⚠ WARNING - Under/over inflated tires

Always check the tires for proper inflation before driving. Underinflated or overinflated tires can cause poor handling, loss of vehicle control, and sudden tire failure leading to accidents, injuries, and even death. For proper tire pressures, refer to “Tires and wheels” in chapter 9.

⚠ WARNING - Tire tread

Always check the tire tread before driving your vehicle. Worn-out tires can result in loss of vehicle control. Worn-out tires should be replaced as soon as possible. For further information and tread limits, refer to "Tires and wheels" in chapter 8.

Fuel, engine coolant and engine oil

High speed travel consumes more fuel than urban motoring. Do not forget to check both the engine coolant and engine oil.

Drive belt

A loose or damaged drive belt may result in overheating of the engine.

WINTER DRIVING

Severe weather conditions in the winter result in greater wear and other problems. To reduce the problems of winter driving, you should follow these suggestions:

Snowy or icy conditions

To drive your vehicle in deep snow, it may be necessary to use snow tires on your tires. If snow tires are needed, it is necessary to select tires equivalent in size and type of the original equipment tires. Failure to do so may adversely affect the safety and handling of your vehicle. Furthermore, speeding, rapid acceleration, sudden brake applications, and sharp turns are potentially very hazardous practices.

During deceleration, use engine braking to the fullest extent. Sudden brake applications on snowy or icy roads may cause skids to occur. You need to keep sufficient distance between the vehicle in operation in front of your vehicle. Also, apply the brake gently.

Snow tires

If you mount snow tires on your vehicle, make sure they are radial tires of the same size and load range as the original tires. Mount snow tires on all four wheels to balance your vehicle's handling in all weather conditions. Keep in mind that the traction provided by snow tires on dry roads may not be as high as your vehicle's original equipment tires. You should drive cautiously even when the roads are clear. Check with the tire dealer for maximum speed recommendations.

Do not install studded tires without first checking local, state and municipal regulations for possible restrictions against their use.

⚠ WARNING - Snow tire size

Snow tires should be equivalent in size and type to the vehicle's standard tires. Otherwise, the safety and handling of your vehicle may be adversely affected.

Use high quality ethylene glycol coolant

Your vehicle is delivered with high quality ethylene glycol coolant in the cooling system. It is the only type of coolant that should be used because it helps prevent corrosion in the cooling system, lubricates the water pump and prevents freezing. Be sure to replace or replenish your coolant in accordance with the maintenance schedule in chapter 8. Before winter, have your coolant tested to assure that its freezing point is sufficient for the temperatures anticipated during the winter.

Check battery and cables

Winter puts additional burdens on the battery system. Visually inspect the battery and cables as described in chapter 8. The level of charge in your battery can be checked by an authorized Kia dealer or a service station.

Change to "winter weight" oil if necessary

In some climates it is recommended that a lower viscosity "winter weight" oil be used during cold weather. See chapter 9 for recommendations. If you aren't sure what weight oil you should use, consult an authorized Kia dealer.

Check spark plugs and ignition system

Inspect your spark plugs as described in chapter 8 and replace them if necessary. Also check all ignition wiring and components to be sure they are not cracked, worn or damaged in any way.

To keep locks from freezing

To keep the locks from freezing, squirt an approved de-icer fluid or glycerine into the key opening. If a lock is covered with ice, squirt it with an approved de-icing fluid to remove the ice. If the lock is frozen internally, you may be able to thaw it out by using a heated key. Handle the heated key with care to avoid injury.

Use approved window washer anti-freeze in system

To keep the water in the window washer system from freezing, add an approved window washer anti-freeze solution in accordance with instructions on the container. Window washer anti-freeze is available from an authorized Kia dealer and most auto parts outlets. Do not use engine coolant or other types of anti-freeze as these may damage the paint finish.

Don’t let your parking brake freeze

Under some conditions your parking brake can freeze in the engaged position. This is most likely to happen when there is an accumulation of snow or ice around or near the rear brakes or if the brakes are wet. If there is a risk the parking brake may freeze, apply it only temporarily while you put the gear shift lever in P (Park, Automatic Transaxle) and block the rear wheels so the vehicle cannot roll. Then release the parking brake.

Don't let ice and snow accumulate underneath

Under some conditions, snow and ice can build up under the fenders and interfere with the steering. When driving in severe winter conditions where this may happen, you should periodically check underneath the vehicle to be sure the movement of the front wheels and the steering components are not obstructed.

Carry emergency equipment

Depending on the severity of the weather, you should carry appropriate emergency equipment. Some of the items you may want to carry include tow straps or chains, flashlight, emergency flares, sand, shovel, jumper cables, window scraper, gloves, ground cloth, coveralls, blanket, etc.

TRAILER TOWING

We do not recommend using this vehicle for trailer towing.

VEHICLE LOAD LIMIT

Tire and loading information label

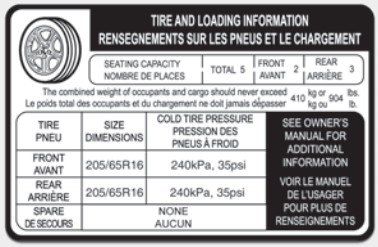

OJFH066051N

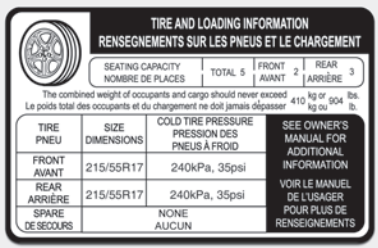

OJFH066052N

The label located on the driver's door sill gives the original tire size, cold tire pressures recommended for your vehicle, the number of people that can be in your vehicle and vehicle capacity weight.

Vehicle capacity weight:

410 kg (904 lbs.)

Vehicle capacity weight is the maximum combined weight of occupants and cargo. If your vehicle is equipped with a trailer, the combined weight includes the tongue load.

Seating capacity:

Total : 5 persons
(Front seat : 2 persons,
Rear seat : 3 persons)

Seating capacity is the maximum number of occupants including a driver, your vehicle may carry.

However, the seating capacity may be reduced based upon the weight of all of the occupants, and the weight of the cargo being carried or towed.

Do not overload the vehicle as there is a limit to the total weight, or load limit including occupants and cargo, the vehicle can carry.

Towing capacity:

We do not recommend using this vehicle for trailer towing.

Cargo capacity:

The cargo capacity of your vehicle will increase or decrease depending on the weight and the number of occupants.

Steps For Determining Correct Load Limit -

1. Locate the statement "The combined weight of occupants and cargo should never exceed XXX kg or XXX lbs." on your vehicle's placard.
2. Determine the combined weight of the driver and passengers that will be riding in your vehicle.
3. Subtract the combined weight of the driver and passengers from XXX kg or XXX lbs.
4. The resulting figure equals the available amount of cargo and luggage load capacity. For example, if the "XXX" amount equals 635 kg (1400 lbs.) and there will be five 68 kg (150 lb) passengers in your vehicle, the amount of available cargo and luggage load capacity is 295 kg (650 lbs).

   (635-340 (5 x 68) = 295 kg or 1400-750 (5 x 150) = 650 lbs.)
5. Determine the combined weight of luggage and cargo being loaded on the vehicle. That weight may not safely exceed the available cargo and luggage load capacity calculated in Step 4.
6. If your vehicle will be towing a trailer, load from your trailer will be transferred to your vehicle. Consult this manual to determine how this reduces the available cargo and luggage load capacity of your vehicle.

⚠ WARNING - Loose cargo

Do not travel with unsecured blunt objects in the passenger compartment of your vehicle (e.g. suit cases or unsecured child seats). These items may strike occupant during a sudden stop or crash.

Example 1

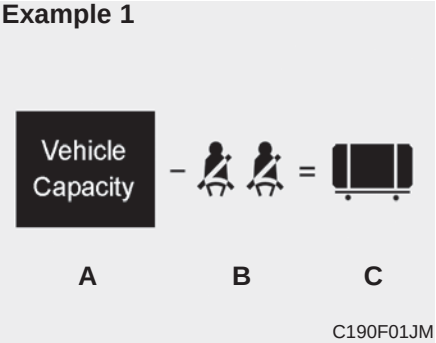

Item	Description	Total
A	Vehicle Capacity Weight	385 kg (849 lbs)
B	Subtract Occupant Weight 68 kg (150 lbs) × 2	136 kg (300 lbs)
C	Available Cargo and Luggage weight	249 kg (549 lbs)

Example 2

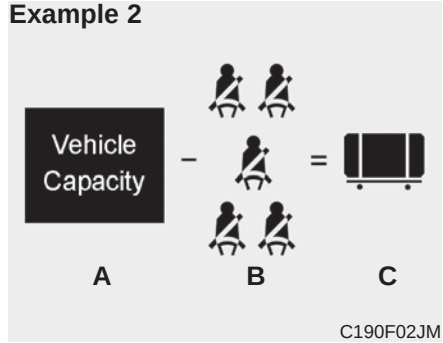

Item	Description	Total
A	Vehicle Capacity Weight	385 kg (849 lbs)
B	Subtract Occupant Weight 68 kg (150 lbs) × 5	340 kg (750 lbs)
C	Available Cargo and Luggage weight	45 kg (99 lbs)

Example 3

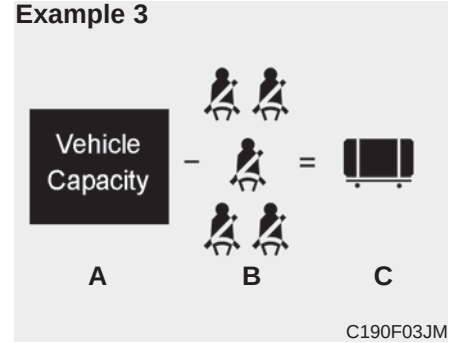

Item	Description	Total
A	Vehicle Capacity Weight	385 kg (849 lbs)
B	Subtract Occupant Weight 73 kg (161 lbs) × 5	365 kg (805 lbs)
C	Available Cargo and Luggage weight	20 kg (44 lbs)

Refer to your vehicle’s tire and loading information label for specific information about your vehicle's capacity weight and seating positions. The combined weight of the driver, passengers and cargo should never exceed your vehicle's capacity weight.

Certification label

The certification label is located on the driver's door sill at the center pillar.

This label shows the maximum allowable weight of the fully loaded vehicle. This is called the GVWR (Gross Vehicle Weight Rating). The GVWR includes the weight of the vehicle, all occupants, fuel and cargo.

This label also tells you the maximum weight that can be supported by the front and rear axles, called Gross Axle Weight Rating (GAWR).

To find out the actual loads on your front and rear axles, you need to go to a weigh station and weigh your vehicle. Your dealer can help you with this. Be sure to spread out your load equally on both sides of the centerline.

⚠ WARNING - Over loading

Never exceed the GVWR for your vehicle, the GAWR for either the front or rear axle and vehicle capacity weight. Exceeding these ratings can affect your vehicle's handling and braking ability.

The label will help you decide how much cargo and installed equipment your vehicle can carry.

If you carry items inside your vehicle - like suitcases, tools, packages, or anything else - they are moving as fast as the vehicle. If you have to stop or turn quickly, or if there is a crash, the items will keep going and can cause an injury if they strike the driver or a passenger.

⚠ WARNING - Over loading

Do not overload your vehicle. Overloading your vehicle can cause heat buildup in your vehicle's tires and possible tire failure, increased stopping distances and poor vehicle handling--all of which may result in a crash.

✻ NOTICE

Overloading your vehicle may cause damage. Repairs would not be covered by your warranty. Do not overload your vehicle.

VEHICLE WEIGHT

This chapter will guide you in the proper loading of your vehicle and/or trailer, to keep your loaded vehicle weight within its design rating capability, with or without a trailer. Properly loading your vehicle will provide maximum return of the vehicle design performance. Before loading your vehicle, familiarize yourself with the following terms for determining your vehicle's weight ratings, with or without a trailer, from the vehicle's specifications and the compliance label:

Base curb weight

This is the weight of the vehicle including a full tank of fuel and all standard equipment. It does not include passengers, cargo, or optional equipment.

Vehicle curb weight

This is the weight of your new vehicle when you picked it up from your dealer plus any aftermarket equipment.

Cargo weight

This figure includes all weight added to the Base Curb Weight, including cargo and optional equipment.

GAW (Gross axle weight)

This is the total weight placed on each axle (front and rear) - including vehicle curb weight and all payload.

GAWR (Gross axle weight rating)

This is the maximum allowable weight that can be carried by a single axle (front or rear). These numbers are shown on the compliance label. The total load on each axle must never exceed its GAWR.

GVW (Gross vehicle weight)

This is the Base Curb Weight plus actual Cargo Weight plus passengers.

GVWR (Gross vehicle weight rating)

This is the maximum allowable weight of the fully loaded vehicle (including all options, equipment, passengers and cargo). The GVWR is shown on the certification label located on the driver’s door sill.

What to do in an emergency

Road warning 7-2
- Hazard warning flasher 7-2

In case of an emergency while driving. 7-3
- If the engine stalls at a crossroad or crossing. 7-3
- If you have a flat tire while driving. 7-3
- If the engine stalls while driving 7-3

If the engine will not start 7-4
- If engine doesn't turn over or turns over slowly 7-4
- If engine turns over normally but does not start. . . . 7-4

Emergency starting 7-5
- Jump starting. 7-5
- Push-starting 7-6

If the engine overheats. 7-7

Tire Pressure Monitoring System (TPMS) 7-9
- Check tire pressure 7-9
- Low tire pressure position telltale 7-11
- Changing a tire with TPMS 7-13

If you have a flat tire (With Tire Mobility Kit). . 7-15
- Introduction 7-16
- Notes on the safe use of the Tire Mobility Kit 7-16
- Components of the Tire Mobility Kit 7-18
- Using the Tire Mobility Kit 7-19
- Distributing the sealant. 7-22
- Checking the tire inflation pressure 7-22
- Technical Data 7-23

Towing 7-24
- Towing service 7-24
- Removable towing hook 7-25
- Emergency towing. 7-26

If an accident occurs 7-29

ROAD WARNING

Hazard warning flasher

The hazard warning flasher serves as a warning to other drivers to exercise extreme caution when approaching, overtaking, or passing your vehicle.

It should be used whenever emergency repairs are being made or when the vehicle is stopped near the edge of a roadway.

Depress the flasher switch with the ignition switch in any position. The flasher switch is located in the center facia panel. All turn signal lights will flash simultaneously.

- The hazard warning flasher operates whether your vehicle is running or not.
- The turn signals do not work when the hazard flasher is on.
- Care must be taken when using the hazard warning flasher while the vehicle is being towed.

IN CASE OF AN EMERGENCY WHILE DRIVING

If the engine stalls at a crossroad or crossing

If the engine stalls at a crossroad or crossing, set the shift lever in the N (Neutral) position and then push the vehicle to a safe place.

If you have a flat tire while driving

If a tire goes flat while you are driving:

1. Take your foot off the accelerator pedal and let the vehicle slow down while driving straight ahead. Do not apply the brakes immediately or attempt to pull off the road as this may cause a loss of control. When the vehicle has slowed to such a speed that it is safe to do so, brake carefully and pull off the road. Drive off the road as far as possible and park on firm level ground. If you are on a divided highway, do not park in the median area between the two traffic lanes.
2. When the vehicle is stopped, turn on your emergency hazard flashers, set the parking brake and put the transaxle in P (for Automatic transaxle.
3. Have all passengers get out of the vehicle. Be sure they all get out on the side of the vehicle that is away from traffic.
4. When changing a flat tire, follow the instruction provided later in this section.

If the engine stalls while driving

1. Reduce your speed gradually, keeping a straight line. Move cautiously off the road to a safe place.
2. Turn on your emergency flashers.
3. Try to start the hybrid system again. If your vehicle will not start, contact an authorized Kia dealer or seek other qualified assistance.

✻ NOTICE

If there was a check engine light and loss of power or stall and if safe to do so, wait at least 10 seconds to restart the vehicle after it stalls. This may reset the car so it will no longer run at low power (limp home) condition.

IF THE ENGINE WILL NOT START

If engine doesn't turn over or turns over slowly

1. If your vehicle has an automatic transaxle, be sure the shift lever is in N (Neutral) or P (Park) and the emergency brake is set.
2. Check the battery connections to be sure they are clean and tight.
3. Turn on the interior light. If the light dims or goes out when you operate the starter, the battery is discharged.
4. Check the starter connections to be sure they are securely tightened.
5. Do not push or pull the vehicle to start it. See instructions for "Jump starting".

⚠ WARNING - Push/pull start

Do not push or pull the vehicle to start it. Push or pull starting may cause the catalytic converter to overload and create a fire hazard.

If engine turns over normally but does not start

1. Check the fuel level.
2. With the ignition switch in the LOCK position, check all connectors at the ignition coils and spark plugs. Reconnect any that may be disconnected or loose.
3. Check the fuel line in the engine compartment.
4. If the engine still does not start, call an authorized Kia dealer or seek other qualified assistance.

EMERGENCY STARTING

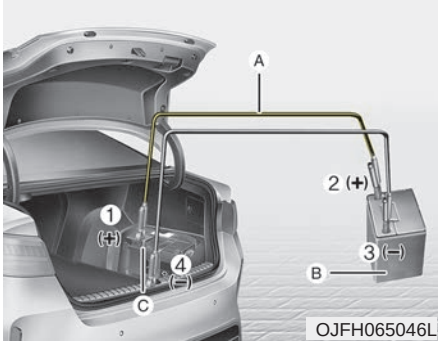

Connect cables in numerical order and disconnect in reverse order.

❊(A) : Jumper Cables
(B) : Booster battery
(C) : Discharged battery

Jump starting

Jump starting can be dangerous if done incorrectly. Therefore, to avoid harm to yourself or damage to your vehicle or battery, follow these jump starting procedures. If in doubt, we strongly recommend that you have a competent technician or towing service jump start your vehicle.

⚠ CAUTION - Push/pull start to 12 Volt Battery

Use only a 12-volt jumper system. You can damage a 12-volt starting motor, ignition system, and other electrical parts beyond repair by use of a 24-volt power supply (either two 12-volt batteries in series or a 24-volt motor generator set).

⚠ WARNING - Battery

Never attempt to check the electrolyte level of the battery as this may cause the battery to rupture or explode.

⚠ WARNING - Frozen batteries

Do not attempt to jump start the vehicle if the discharged battery is frozen or if the electrolyte level is low as the battery may rupture or explode.

⚠ WARNING - Battery

Keep all flames or sparks away from the battery. The battery produces hydrogen gas which will explode if exposed to flame or sparks.

⚠ WARNING - Sulfuric acid risk

When jump starting your vehicle, be careful not to get acid on yourself, your clothing or on the vehicle. Automobile batteries contain sulfuric acid. This is poisonous and highly corrosive.

Jump starting procedure

1. Make sure the booster battery is 12-volt and that its negative terminal is grounded.
2. If the booster battery is in another vehicle, do not allow the vehicles to come in contact.
3. Turn off all unnecessary electrical loads.
4. Connect the jumper cables in the exact sequence shown in the illustration. First connect one end of a jumper cable to the positive terminal of the discharged battery (1), then connect the other end to the positive terminal of the booster battery (2).

   Proceed to connect one end of the other jumper cable to the negative terminal of the booster battery (3), then the other end to a solid, stationary, metallic point (for example, the engine lifting bracket) away from the battery (4). Do not connect it to or near any part that moves when the engine is cranked.

   Do not allow the jumper cables to contact anything except the correct battery terminals or the correct ground. Do not lean over the battery when making connections.

⚠ WARNING - Battery cables

Do not connect the jumper cable from the negative terminal of the booster battery to the negative terminal of the discharged battery. This can cause the discharged battery to overheat and crack, releasing battery acid.

Make sure to connect one end of the jumper cable to the negative terminal of the booster battery, and the other end to a metallic point, far away from the battery.

5. Start the engine of the vehicle with the booster battery and let it run at 2,000 rpm, then start the engine of the vehicle with the discharged battery.

If the cause of your battery discharging is not apparent, you should have your vehicle checked by an authorized Kia dealer.

Push-starting

Vehicles equipped with automatic transaxle lock system cannot be push-started.

Follow the directions in this section for jump-starting.

⚠ WARNING - Tow starting vehicle

Never tow a vehicle to start it.

When the engine starts, the vehicle can suddenly surge forward and could cause a collision with the tow vehicle.

IF THE ENGINE OVERHEATS

If your temperature gauge indicates overheating, you will experience a loss of power, or hear loud pinging or knocking, the engine is probably too hot. If this happens, you should:

1. Turn on the emergency warning flasher and stop in a safe place. Move the shift lever to P (Park) and engage the parking brake.
2. If hot steam does not come out from the engine room, carefully open the engine room and check whether the water pump connector is properly engaged. If the connector is not properly engaged, stop the engine immediately and properly engage the connector. Then, turn the engine on.
3. Turn on the air conditioner.
4. If the “HEV Warning” light turns on in the driver instrument cluster, or engine coolant or hot steam emits from the engine coolant filler, stop the engine immediately. Then, call the nearest authorized Kia dealer for assistance. If the “Engine Warning” light remains illuminated or the engine coolant is not flowing out, keep the engine running. Open the engine hood for ventilation to help cool down the engine.

⚠ WARNING

While the engine is running, keep hair, hands and clothing away from moving parts such as the fan and drive belts to prevent injury.

5. Check the coolant temperature gauge on the instrument cluster to make sure the coolant temperature is sufficiently cooled down. If the engine coolant level is low, please check the connecting parts between the radiator hose, heater hose, and water pump for any signs of leakage. When there is no sign of leakage, please refill the engine coolant. If causes and signs of engine overheating such as warning light illumination, engine coolant leakage, or cooling fan malfunction are found, stop the vehicle the earliest. Then, call the nearest authorized Kia dealer for assistance.

⚠ WARNING

Do not remove the radiator cap when the engine is hot. This can allow coolant to blow out of the opening and cause serious burns.

6. If you cannot find the cause of the overheating, wait until the engine temperature has returned to normal. Then, if coolant has been lost, carefully add coolant to the reservoir to bring the fluid level in the reservoir up to the halfway mark.
7. Proceed with caution, keeping alert for further signs of overheating. If over heating happens again, call the nearest authorized Kia dealer for assistance.

✻ NOTICE

Serious loss of coolant indicates there is a leak in the cooling system and should be checked as soon as possible by an authorized Kia dealer.

⚠ CAUTION

When the engine overheats from low engine coolant, suddenly adding engine coolant may cause cracks in the engine. To prevent damage, add engine coolant slowly in small quantities

TIRE PRESSURE MONITORING SYSTEM (TPMS) (IF EQUIPPED)

OJFHP047487L

(1) Low tire pressure telltale / TPMS malfunction indicator

(2) Low tire pressure position telltale (Shown on the LCD display)

Check tire pressure

- You can check the tire pressure in the information mode on the cluster.
  - Refer to “User settings mode” in chapter 4.
- Tire pressure is displayed 1~2 minutes later after driving.
- If tire pressure is not displayed when the vehicle is stopped, “Drive to display” message displays. After driving, check the tire pressure.
- You can change the tire pressure unit in the user settings mode on the cluster.
  - psi, kpa, bar (Refer to “User settings mode” in chapter 4).

✻ NOTICE

- **The tire pressure may change due to factors such as parking condition, driving style, and altitude above sea level.**
- **Low tire pressure warning may sound when a tire’s pressure unit is equal or higher than nearby tires. This is a normal occurrence, which is due to the change in tire pressure along with tire temperature.**
- **The tire pressure shown on the dashboard may differ from the tire pressure measured by tire pressure gauge.**

Each tire, including the spare (if provided), should be checked monthly when cold and inflated to the inflation pressure recommended by the vehicle manufacturer on the vehicle placard or tire inflation pressure label. (If your vehicle has tires of a different size than the size indicated on the vehicle placard or tire inflation pressure label, you should determine the proper tire inflation pressure for those tires.)

As an added safety feature, your vehicle has been equipped with a tire pressure monitoring system (TPMS) that illuminates a low tire pressure telltale when one or more of your tires is significantly under-inflated. Accordingly, when the low tire pressure telltale illuminates, you should stop and check your tires as soon as possible, and inflate them to the proper pressure. Driving on a significantly under inflated tire causes the tire to overheat and can lead to tire failure. Under-inflation also reduces fuel efficiency and tire tread life, and may affect the vehicle's handling and stopping ability.

Please note that the TPMS is not a substitute for proper tire maintenance, and it is the driver's responsibility to maintain correct tire pressure, even if under-inflation has not reached the level to trigger illumination of the TPMS low tire pressure telltale.

Your vehicle has also been equipped with a TPMS malfunction indicator to indicate when the system is not operating properly. The TPMS malfunction indicator is combined with the low tire pressure telltale. When the system detects a malfunction, the telltale will flash for approximately one minute and then remain continuously illuminated. This sequence will continue upon subsequent vehicle start-ups as long as the malfunction exists. When the malfunction indicator is illuminated, the system may not be able to detect or signal low tire pressure as intended. TPMS malfunctions may occur for a variety of reasons, including the installation of replacement or alternate tires or wheels on the vehicle that prevent the TPMS from functioning properly.

Always check the TPMS malfunction telltale after replacing one or more tires or wheels on your vehicle to ensure that the replacement or alternate tires and wheels allow the TPMS to continue to function properly.

✻ NOTICE

If the TPMS, Low Tire Pressure indicator does not illuminate for 3 seconds when the ignition switch is turned to the ON position, or if they remain illuminated after coming on for approximately 3 seconds, take your vehicle to your nearest authorized Kia dealer and have the system checked.

Low tire pressure telltale

Low tire pressure position telltale

OJFHP047487L

When the tire pressure monitoring system warning indicators are illuminated, one or more of your tires is significantly under-inflated.

If the telltale illuminates, immediately reduce your speed, avoid hard cornering and anticipate increased stopping distances. You should stop and check your tires as soon as possible.

Inflate the tires to the proper pressure as indicated on the vehicle's placard or tire inflation pressure label located on the driver's side center pillar outer panel. If you cannot reach a service station or if the tire cannot hold the newly added air, replace the low pressure tire with the spare tire.

Then the TPMS malfunction indicator and the Low Tire Pressure telltale may turn on and illuminate after restarting and about 20 minutes of continuous driving before you have the low pressure tire repaired and replaced on the vehicle.

In winter or cold weather, the low tire pressure telltale may be illuminated if the tire pressure was adjusted to the recommended tire inflation pressure in warm weather. It does not mean your TPMS is malfunctioning because the decreased temperature leads to a proportional lowering of tire pressure.

When you drive your vehicle from a warm area to a cold area or from a cold area to a warm area, or the outside temperature is greatly higher or lower, you should check the tire inflation pressure and adjust the tires to the recommended tire inflation pressure.

When filling tires with more air, conditions to turn off the low tire pressure telltale may not be met. This is because a tire inflator has a margin of error in performance. The low tire pressure telltale will be turned off if the tire pressure is above the recommended tire inflation pressure.

⚠ WARNING - Low pressure damage

Do not drive on low pressure tires. Significantly low tire pressure can cause the tires to overheat and fail making the vehicle unstable resulting in increased braking distances and a loss of vehicle control.

TPMS (Tire Pressure Monitoring System) malfunction indicator

The low tire pressure telltale will illuminate after it blinks for approximately one minute when there is a problem with the Tire Pressure Monitoring System. If the system is able to correctly detect an underinflation warning at the same time as system failure then it will illuminate both the TPMS malfunction and low tire pressure position telltales e.g. if Front Left sensor fails, the TPMS malfunction indicator illuminates, but if the Front Right, Rear Left, or Rear Right tire is under-inflated, the low tire pressure position telltales may illuminate together with the TPMS malfunction indicator.

Have the system checked by an authorized Kia dealer as soon as possible to determine the cause of the problem.

- The TPMS malfunction indicator may be illuminated if the vehicle is moving around electric power supply cables or radios transmitters such as at police stations, government and public offices, broadcasting stations, military installations, airports, or transmitting towers, etc. This can interfere with normal operation of the Tire Pressure Monitoring System (TPMS).
- The TPMS malfunction indicator may be illuminated if snow chains are used or some separate electronic devices such as notebook computer, mobile charger, remote starter or navigation etc., are used in the vehicle. This can interfere with normal operation of the Tire Pressure Monitoring System (TPMS).

Changing a tire with TPMS

If you have a flat tire, the Low Tire Pressure telltale will come on. Have the flat tire repaired by an authorized Kia dealer as soon as possible or replace the flat tire with the spare tire.

> ⚠ **CAUTION - Repair Agents**
>
> ***Never use a puncture-repairing agent not approved by Kia to repair and/or inflate a low pressure tire. The sealant not approved by Kia may damage the tire pressure sensor.***

Each wheel is equipped with a tire pressure sensor mounted inside the tire behind the valve stem. You must use TPMS specific wheels. It is recommended that you always have your tires serviced by an authorized Kia dealer.

Even if you replace the low pressure tire with the spare tire, the Low Tire Pressure telltale will remain on until the low pressure tire is repaired and placed on the vehicle.

After you replace the low pressure tire with the spare tire, the TPMS malfunction indicator may illuminate after a few minutes because the TPMS sensor mounted on the spare wheel is not initiated.

Once the low pressure tire is inflated again to the recommended pressure and installed on the vehicle or the TPMS sensor mounted on the replaced spare wheel is initiated by an authorized Kia dealer, the TPMS malfunction indicator and the low tire pressure telltale will turn off within a few minutes of driving.

If the indicator has not disappeared after a few minutes of driving, please visit an authorized Kia dealer.

If an original mounted tire is replaced with the spare tire, the TPMS sensor on the replaced spare wheel should be initiated and the TPMS sensor on the original mounted wheel should be deactivated. If the TPMS sensor on the original mounted wheel located in the spare tire carrier still activates, the tire pressure monitoring system may not operate properly. Have the tire with TPMS serviced or replaced by an authorized Kia dealer.

You may not be able to identify a low tire by simply looking at it. Always use a good quality tire pressure gauge to measure the tire's inflation pressure. Please note that a tire that is hot (from being driven) will have a higher pressure measurement than a tire that is cold (from sitting stationary for at least 3 hours and driven less than 1.6 km (1 mile) during that 3 hour period).

Allow the tire to cool before measuring the inflation pressure. Always be sure the tire is cold before inflating to the recommended pressure.

A cold tire means the vehicle has been sitting for 3 hours and driven for less than 1.6 km (1 mile) in that 3 hour period.

Never use tire sealant if your vehicle is equipped with a Tire Pressure Monitoring System. The liquid sealant can damage the tire pressure sensors.

- The TPMS cannot alert you to severe and sudden tire damage caused by external factors such as nails or road debris.
- If you feel any vehicle instability, immediately take your foot off the accelerator, apply the brakes gradually and with light force, and slowly move to a safe position off the road.

✻ NOTICE - Protecting TPMS

Tampering with, modifying, or disabling the Tire Pressure Monitoring System (TPMS) components may interfere with the system's ability to warn the driver of low tire pressure conditions and/or TPMS malfunctions. Tampering with, modifying, or disabling the Tire Pressure Monitoring System (TPMS) components may void the warranty for that portion of the vehicle.

This device complies with Industry Canada licence-exempt RSS standard(s).

Operation is subject to the following two conditions:

(1) This device may not cause interference, and

(2) This device must accept any interference, including interference that may cause undesired operation of the device.

IF YOU HAVE A FLAT TIRE (WITH TIRE MOBILITY KIT)

Please read the instructions before using the Tire Mobility Kit.

(1) Compressor

(2) Sealant bottle

The Tire Mobility Kit is a temporary fix to the tire and the tire should be inspected by an authorized Kia dealer as soon as possible.

⚠ CAUTION - One sealant for one tire

When two or more tires are flat, do not use the Tire Mobility Kit because the canister of sealant only contains enough sealant for one flat tire.

⚠ WARNING - Tire wall

Do not use the Tire Mobility Kit to repair large punctures or damage to the tire sidewalls. In these situations, the tire cannot be sealed completely and air will leak from the tire. This can result in tire failure.

⚠ WARNING - Speed with temporary fix

Do not exceed a speed of 80 km/h (50 mph) when driving with a tire sealed with the Tire Mobility Kit. While driving, if you experience any unusual vibration, ride disturbance or noise, reduce your speed and drive with caution until you can safely pull off the side of the road.

⚠ WARNING - Temporary fix

Have your tire repaired as soon as possible. The tire may lose air pressure at any time after inflating with the Tire Mobility Kit.

✻ NOTICE

When repairing a flat tire with the Tire Mobility Kit (TMK), quickly remove the sealant on the tire pressure sensor and wheel. When installing the repaired tire and wheel, tighten the wheel nut to a torque value of 11 ~ 13kgf·m.

Introduction

OJFH067010

With the Tire Mobility Kit (TMK) you can stay mobile even after experiencing certain tire punctures.

The system compressor and sealing compound effectively seal most punctures in a passenger car tire caused by nails or similar objects and reinflate the tire.

After you ensure that the tire is properly sealed, you can drive cautiously on the tire at a max. speed of 80 km/h (50 mph) in order to reach a vehicle or tire dealer to have the tire replaced as soon as.

It is possible that some tires, especially with larger punctures or damage to the sidewall, cannot be sealed completely.

Air pressure loss in the tire may adversely affect tire performance.

For this reason, you should avoid abrupt steering or other driving maneuvers, especially if the vehicle is heavily loaded or if a trailer is in use.

The Tire Mobility Kit is not designed or intended as a permanent tire repair method and is to be used for one tire only.

This instruction shows you step by step how to temporarily seal the puncture.

Read the section "Notes on the safe use of the Tire Mobility Kit".

Notes on the safe use of the Tire Mobility Kit

- Park your car at the side of the road so that you can work with the Tire Mobility Kit away from moving traffic.
- To be sure your vehicle will not move, even when you're on fairly level ground, always set your parking brake.
- Only use the Tire Mobility Kit for sealing/inflation passenger car tires. Only punctured areas located within the tread region of the tire can be sealed using the Tire Mobility Kit.
- Do not use on motorcycles, bicycles or any other type of tires.
- When the tire and wheel are damaged, do not use Tire Mobility Kit for your safety.

- Use of the Tire Mobility Kit may not be effective for tire damage larger than approximately 6 mm (0.24 in).

  Please contact the nearest Kia dealership if the tire cannot be made roadworthy with the Tire Mobility Kit.
- Do not remove any foreign objects such as nails or screws that have penetrated the tire.
- Provided the car is outdoors, leave the engine running. Otherwise operating the compressor may eventually drain the car battery.
- Never leave the Tire Mobility Kit unattended while it is being used.
- Do not leave the compressor running for more than 10 min. at a time or it may overheat.
- Do not use the Tire Mobility Kit if the ambient temperature is below -30°C (-22°F).
- If the sealant gets on your skin, wash it with a large amount of water and if it irritates continuously, visit a doctor for examination.
- If the sealant gets into your eyes, raise your eyelid and wash for at least 15 minutes. If it irritates continuously, visit a doctor for examination.
- If you have drank the sealant, wash the mouth and drink a large amount of water. However, do not give anything to an unconscious person and see the doctor immediately.

  Exposure to the sealant for a long time may cause damage to the bodily tissues.

⚠ WARNING

- **If sealant comes into contact with skin, wash the affected areas thoroughly. Seek medical attention if irritation develops and persists.**
- **If sealant comes into contact with the eyes, flush eyes with water for at least 15 minutes.**

  Seek medical attention if irritation persists.
- **If sealant is swallowed, call a physician or poison control center immediately.**

⚠ WARNING

Do not use the Tire Mobility Kit if a tire is severely damaged.

Components of the Tire Mobility Kit

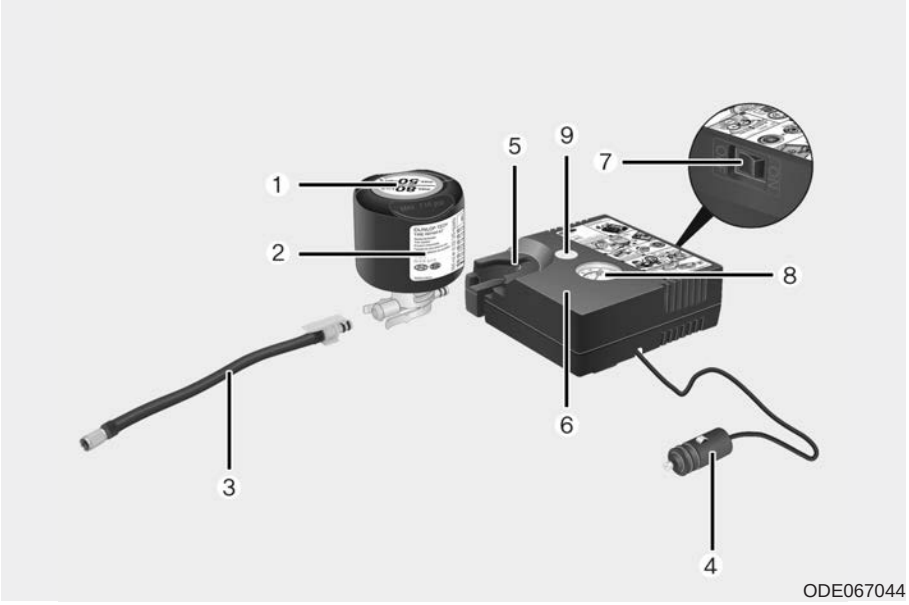

1. Speed restriction label
2. Sealant bottle and label with speed restriction
3. Filling hose from sealant bottle to wheel
4. Connectors and cable for the power outlet direct connection
5. Holder for the sealant bottle
6. Compressor
7. On/off switch
8. Pressure gauge for displaying the tire inflation pressure
9. Button for reducing tire inflation pressure

Connectors and cable are stored in the compressor housing.

⚠ WARNING - Expired sealant

Do not use the Tire sealant after the sealant has expired (i.e. after the expiration date on the sealant container). This can increase the risk of tire failure.

⚠ WARNING - Sealant

- **Keep out of reach of children.**
- **Avoid contact with eyes.**
- **Do not swallow.**

✻ NOTICE

The sealant container and insert hose (3) cannot be reused.

Using the Tire Mobility Kit

1. Detach the speed restriction label (1) from the sealant bottle (2), and place it in a highly visible place inside the vehicle such as on the steering wheel to remind the driver not to drive too fast.
2. Strictly follow the specific procedures for using the sealant.

OJF065012

⚠ CAUTION

Before using the tire repair kit, please read carefully the instruction attached on the sealant case. Detach the speed limit label on the sealant case and put it on a highly visible place. Always drive within the speed limit.

ODEP067048

3. Shake the sealant bottle.

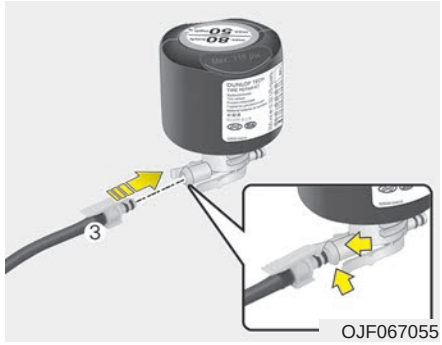

OJF067055

4. Connect the filling hose (3) onto the connector of the sealant bottle.
5. Ensure that button (7) on the compressor is not pressed.

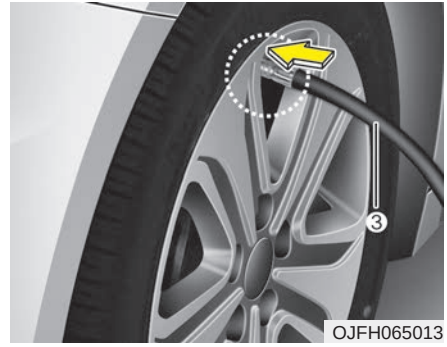

OJFH065013

6. Unscrew the valve cap from the valve of the defective wheel and screw filling hose (3) of the sealant bottle onto the valve.

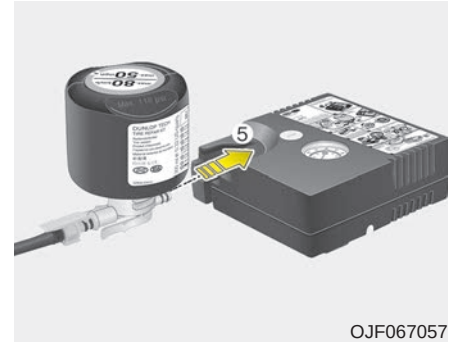

OJF067057

7. Insert the sealant bottle into the housing (5) of the compressor so that the bottle is upright.
8. Ensure that the compressor is switched off.

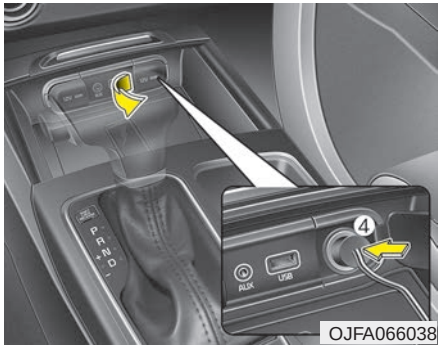

9. Connect between compressor and the vehicle power outlet using the cable and connectors (4).

✻ NOTICE

Only use the front passenger side power outlet.

10. With the engine start/stop button position on: switch on the compressor and let it run for approximately 5~7 minutes to fill the sealant up to proper pressure (refer to the "Tires and wheels" in chapter 9). Be careful not to over-inflate the tire and stay away from the tire when filling it. When the tire and wheel are damaged, do not use Tire Mobility Kit for your safety.

⚠ WARNING

Do not attempt to drive your vehicle if the tire pressure is below 200 kPa (29 psi). This could result in an accident due to sudden tire failure.

11. Switch off the compressor.
12. Detach the hose from the sealant bottle connector and from the tire valve.

Return the Tire Mobility Kit to its storage location in the vehicle.

⚠ WARNING

Carbon monoxide poisoning and suffocation is possible if the engine is left running in a poorly ventilated or unventilated location (such as inside a building).

Distributing the sealant

13. Immediately drive approximately 7 ~ 10 km (4 ~ 6 miles or, about 10 min) to evenly distribute the sealant in the tire.

⚠ CAUTION

When you use the Tire Mobility Kit, the tire pressure sensors and wheel may be stained by sealant. Therefore, remove the tire pressure sensors and wheel stained by sealant and have your vehicle inspected by an authorized Kia dealer.

Checking the tire inflation pressure

1. After driving approximately 7 ~ 10 km (4 ~ 6 miles or about 10 minutes), stop at a suitable location.
2. Connect the filling hose (3) of the compressor (clip mounted side) directly and then connect the filling hose (3) (opposite side) to the tire valve.
3. Connect between compressor and the vehicle power outlet using the cable and connectors.
4. Adjust the tire inflation pressure to 200 kPa (29 psi). With the ignition switched on, proceed as follows.
   - **To increase the inflation pressure:** Switch on the compressor, position I. To check the current inflation pressure setting, briefly switch off the compressor.
   - **To reduce the inflation pressure:** Press the button (9) on the compressor.

⚠ WARNING

Do not let the compressor run for more than 10 minutes, otherwise the device will overheat and may be damaged.

⚠ CAUTION - Tire pressure sensor

When you use the Tire Mobility Kit including sealant not approved by Kia, the tire pressure sensors may be damaged by sealant. The sealant on the tire pressure sensor and wheel should be removed when you replace the tire with a new one and inspect the tire pressure sensors at an authorized dealer.

Technical Data

System voltage: DC 12 V

Working voltage: DC 10 - 15 V

Amperage rating: max. 15 A ± 1A (at DC 12V operation)

Suitable for use at temperatures:
-30 ~ +70°C (-22 ~ +158°F)

Max. working pressure:
87 psi (6 bar)

Size

Compressor: 161 x 150 x 55.8 mm (6.3 x 5.9 x 2.2 in.)

Sealant bottle: 104 x 85 ø mm (4.1 x 3.3 ø in.)

Compressor weight:
805g ± 30g (1.77 lbs ± 0.07 lbs)

Sealant volume:
300 ml (18.3 cu. in.)

❊ Sealant and spare parts can be obtained and replaced at an authorized vehicle or tire dealer. Empty sealant bottles may be disposed of at home. Liquid residue from the sealant should be disposed of by your vehicle or tire dealer or in accordance with local waste disposal regulations.

TOWING

Towing service

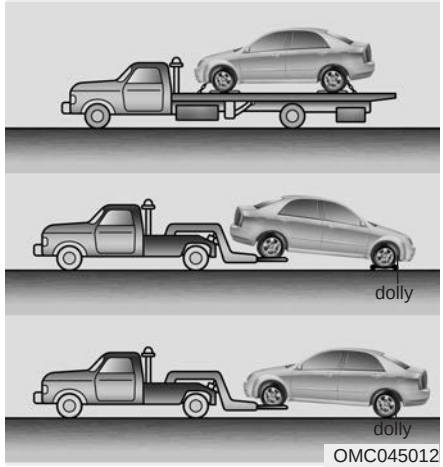

If emergency towing is necessary, we recommend having it done by an authorized Kia dealer or a commercial tow-truck service. Proper lifting and towing procedures are necessary to prevent damage to the vehicle. The use of wheel dollies or flatbed is recommended.

It is acceptable to tow the vehicle with the rear wheels on the ground (without dollies) and the front wheels off the ground.

If any of the loaded wheels or suspension components are damaged or the vehicle is being towed with the front wheels on the ground, use a towing dolly under the front wheels.

When being towed by a commercial tow truck and wheel dollies are not used, the front of the vehicle should always be lifted, not the rear.

✻ NOTICE

If the EPB does not release normally, take your vehicle to an authorized Kia dealer by loading the vehicle on a flatbed tow truck and have the system checked.

⚠ WARNING - Side and curtain Air bag

If your vehicle is equipped with side and curtain air bag, set the ignition switch to OFF or ACC position when the vehicle is being towed.

The side and curtain air bag may deploy when the ignition is ON, and the rollover sensor detects the situation as a rollover.

HXD02

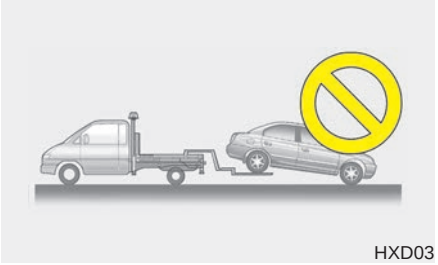

HXD03

⚠ **CAUTION - Towing**

- ***Do not tow the vehicle backwards with the front wheels on the ground as this may cause damage to the vehicle.***
- ***Do not tow with sling-type equipment. Use wheel lift or flatbed equipment.***

When towing your vehicle in an emergency without wheel dollies :

1. Set the ignition switch in the ACC position.
2. Place the transaxle shift lever in N (Neutral).
3. Release the parking brake.

⚠ **CAUTION - Towing gear position**

Failure to place the transaxle shift lever in N (Neutral) may cause internal damage to the transaxle.

Removable towing hook (if equipped)

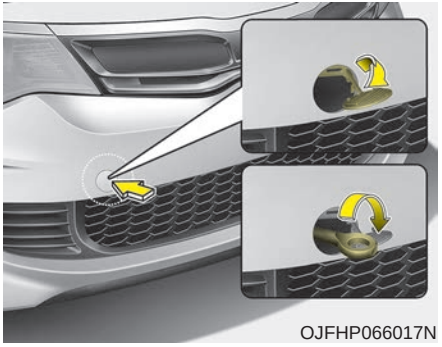

OJFHP066017N

1. Open the trunk, and remove the towing hook from the tool case.
2. Remove the hole cover pressing the upper part of the cover on the bumper.

3. Install the towing hook by turning it clockwise into the hole until it is fully secured.
4. Remove the towing hook and install the cover after use.

Emergency towing

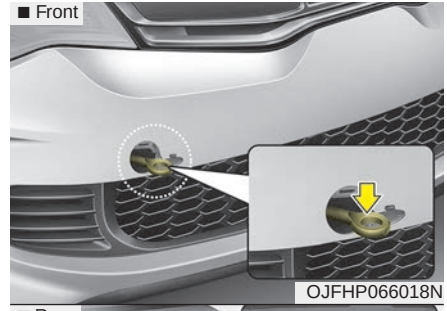

OJFHP066018N

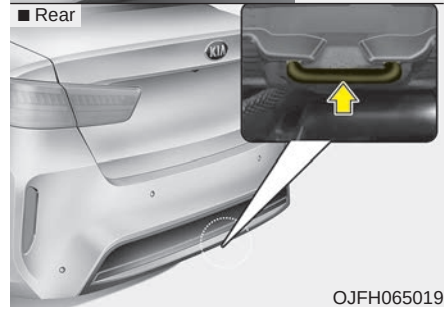

OJFH065019

If towing is necessary, have it done by an authorized Kia dealer or a commercial tow truck service.

If towing service is not available in an emergency, your vehicle may be temporarily towed using a cable or chain secured to the emergency towing hook under the front (or rear) of the vehicle. Use extreme caution when towing the vehicle. A driver must be in the vehicle to steer it and operate the brakes.

Towing in this manner may be done only on hard-surfaced roads for a short distance and at low speed. Also, the wheels, axles, power train, steering and brakes must all be in good condition.

- Do not use the tow hooks to pull a vehicle out of mud, sand or other conditions from which the vehicle cannot be driven out under its own power.
- Avoid towing a vehicle heavier than the vehicle doing the towing.
- The drivers of both vehicles should communicate with each other frequently.

⚠ CAUTION

Using a portion of the vehicle other than the tow hooks for towing may damage the body of your vehicle.

- Attach a towing strap to the tow hook.
- Use only a cable or chain specifically intended for use in towing vehicles. Securely fasten the cable or chain to the towing hook provided.
- Before emergency towing, check if the hook is not broken or damaged.
- Fasten the towing cable or chain securely to the hook.
- Do not jerk the hook. Apply it steadily and with even force.
- To avoid damaging the hook, do not pull from the side or at a vertical angle. Always pull straight ahead.

⚠ WARNING - Emergency Towing Precautions

Use extreme caution when towing the vehicle.

- **Avoid sudden starts or erratic driving maneuvers which would place excessive stress on the emergency towing hook and towing cable or chain. The hook and towing cable or chain may break and cause serious injury or damage.**
- **If the disabled vehicle is unable to be moved, do not forcibly continue the towing. We recommend that you contact an authorized Kia dealer or a commercial tow truck service for assistance.**
- **Tow the vehicle as straight ahead as possible.**
- **Keep away from the vehicle during towing.**

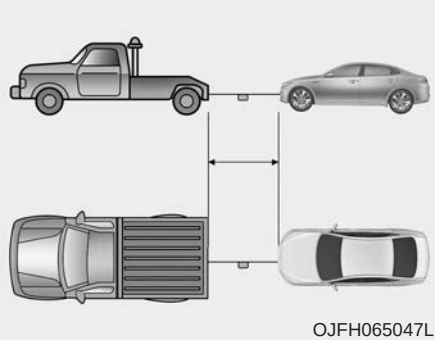

OJFH065047L

- Use a towing strap less than 5 m (16 feet) long. Attach a white or red cloth (about 30 cm (12 inches) wide) in the middle of the strap for easy visibility.
- Drive carefully so that the towing strap is not loosened during towing.

Emergency towing precautions

- Turn the ignition switch to ACC so the steering wheel isn't locked.
- Place the transaxle shift lever in N (Neutral).
- Release the parking bake.
- Press the brake pedal with more force than normal since you will have reduced brake performance.
- More steering effort will be required because the power steering system will be disabled.
- If you are driving down a long hill, the brakes may overheat and brake performance will be reduced. Stop often and let the brakes cool off.
- If the car is being towed with all four wheels on the ground, it can be towed only from the front. Be sure that the transaxle is in neutral. Be sure the steering is unlocked by placing the ignition switch in the ACC position. A driver must be in the towed vehicle to operate the steering and brakes.

⚠ **CAUTION - Automatic transaxle**

- ***To avoid serious damage to the automatic transaxle, limit the vehicle speed to 15 km/h (10 mph) and drive less than 1.5 km (1 mile) when towing.***
- ***Before towing, check the automatic transaxle for fluid leaks under your vehicle. If the automatic transaxle fluid is leaking, flatbed equipment or a towing dolly must be used.***

IF AN ACCIDENT OCCURS

⚠ WARNING - High voltage components

- **For your safety, do not touch high voltage cables, connectors and package modules. High voltage components are orange in color.**
- **Exposed cables or wires may be visible inside or outside of the vehicle. Never touch the wires or cables, because an electrical shock, an injury, or a death may occur.**

✻ NOTICE

Any gas or electrolyte leakage from your vehicle is not only poisonous but also flammable. Upon witnessing gas or electrolyte leakage, make sure your car is parked in a safe area away from any roads, open the windows, and maintain a safe distance away from the vehicle. Immediately contact an authorized Kia dealer and advise them that a hybrid vehicle is involved.

- If you need towing, refer to "Towing" in the previous pages.
- When the vehicle is severely damaged, remain a safe distance of 15 meter (50 feet) or more between your vehicle and other vehicles/flammables.
- If a small scale fire occurs, use a fire extinguisher (ABC, BC) that is meant for electrical fires.

  If it is impossible to extinguish the fire in the early stage, remain a safe distance from the vehicle and immediately call your local fire emergency responders. Also, advise them that a hybrid vehicle is involved.

  If the fire spreads to the high voltage battery, a large amount of water is needed to put out the fire.

  Using small amount of water or fire extinguishers not meant for electrical fires could cause serious injury or death from electrical shocks.

⚠ WARNING - Submersion in water

Do not touch your vehicle if it has been submerged in water. The high-voltage battery may cause shock or may catch fire. Immediately contact the authorities and advise them of the condition of your vehicle and that a hybrid vehicle is involved.

Maintenance

Engine compartment 8-3
Maintenance services 8-4
• Owner's responsibility 8-4
• Owner maintenance precautions 8-5
Owner maintenance 8-6
• Owner maintenance schedule. 8-6
Scheduled maintenance service. 8-8
Explanation of scheduled maintenance items . . . 8-14
Checking fluid levels 8-17
Engine oil. 8-18
• Checking the engine oil level 8-18
• Changing the engine oil and filter 8-19
Engine maintenance mode (for plug-in Hybrid). 8-20
• Starting engine maintenance mode 8-20
• Stopping engine maintenance mode 8-20
Coolant 8-21
• Checking the coolant level 8-21
• Engine coolant 8-22
• Inverter coolant 8-22
• Recommended coolant 8-23
• Changing the coolant 8-24
Brake fluid 8-25
• Checking the brake fluid level 8-25
Washer fluid 8-26
• Checking the washer fluid level. 8-26
Parking brake. 8-27
• Checking the parking brake. 8-27
Air cleaner. 8-28
• Filter replacement 8-28
Climate control air filter 8-30
• Filter inspection 8-30
Wiper blades 8-32
• Blade inspection. 8-32
• Blade replacement 8-32
Battery 8-36
• For best battery service 8-36
• Recharging the battery 8-37
• Reset items 8-38
Tires and wheels 8-39
• Tire care 8-39
• Recommended cold tire inflation pressures 8-39
• Tire pressure 8-40
• Checking tire inflation pressure. 8-40
• Tire rotation 8-41
• Wheel alignment and tire balance 8-42
• Tire replacement 8-43
• Wheel replacement 8-43
• Tire traction 8-44

- Tire maintenance 8-44
- Tire sidewall labeling 8-44
- All season tires 8-51
- Summer tires 8-51
- Snow tires 8-51
- Radial-ply tires 8-52
- Low aspect ratio tire 8-52

Fuses 8-54
- Inner panel fuse replacement 8-56
- Engine compartment fuse replacement 8-57
- Fuse/relay panel description 8-60

Light bulbs 8-74
- Bulb replacement precaution 8-74
- Light bulb position (front) 8-75
- Light bulb position (rear) 8-75
- Light bulb position (side) 8-76
- Headlamp (Low beam) bulb replacement (Headlamp Type A) 8-76
- Headlamp (High beam) bulb replacement (Headlamp Type A) 8-78
- Headlamp (Low/High beam,LED type) bulb replacement (Headlamp Type B) 8-79
- Front turn signal lamp bulb replacement 8-79
- Position lamp + DRL (LED type) bulb replacement . 8-80
- Side repeater lamp bulb replacement 8-81
- Rear turn signal lamp bulb replacement 8-81
- Stop and tail lamp (LED type) bulb replacement . . 8-82
- Back-up lamp bulb replacement 8-83
- License plate lamp bulb replacement 8-84
- High mounted stop lamp bulb replacement 8-84
- Map lamp bulb replacement 8-85
- Vanity mirror lamp bulb replacement 8-85
- Room lamp bulb replacement 8-86
- Personal lamp bulb replacement 8-86
- Glove box lamp bulb replacement 8-87
- Trunk lamp bulb replacement 8-87

Appearance care 8-88
- Exterior care 8-88
- Interior care 8-93

Emission control system 8-96
- Crankcase emission control system 8-96
- Evaporative emission control (including ORVR: Onboard Refueling Vapor Recovery) system 8-96
- Exhaust emission control system 8-97

ENGINE COMPARTMENT

■ **Gasoline Engine (Nu 2.0L - GDI)**

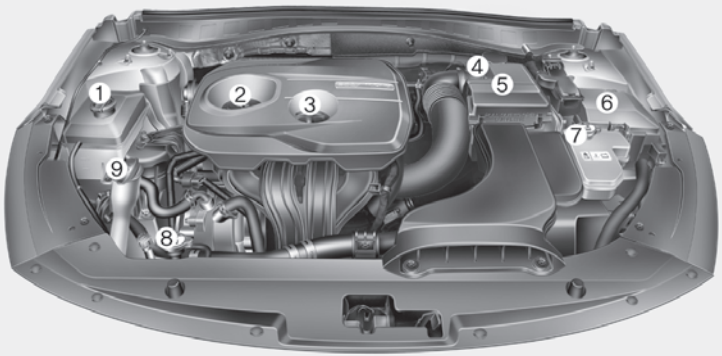

1. Engine coolant reservoir
2. Engine oil filler cap
3. Engine oil dipstick
4. Brake fluid reservoir
5. Air cleaner
6. Fuse box
7. Inverter coolant reservoir
8. Radiator cap
9. Windshield washer fluid reservoir

❈ The actual engine compartment in the vehicle may differ from the illustration.

OJFH075161L

MAINTENANCE SERVICES

You should exercise the utmost care to prevent damage to your vehicle and injury to yourself whenever performing any maintenance or inspection procedures.

Should you have any doubts concerning the inspection or servicing of your vehicle, we strongly recommend that you have an authorized Kia dealer perform this work.

An authorized Kia dealer has factory-trained technicians and genuine Kia parts to service your vehicle properly. For expert advice and quality service, see an authorized Kia dealer.

Inadequate, incomplete or insufficient servicing may result in operational problems with your vehicle that could lead to vehicle damage, an accident, or personal injury.

Owner’s responsibility

✻ NOTICE

Maintenance Service and Record Retention are the owner's responsibility.
You should retain documents that show proper maintenance has been performed on your vehicle in accordance with the scheduled maintenance service charts shown on the following pages. You need this information to establish your compliance with the servicing and maintenance requirements of your vehicle warranties.
Detailed warranty information is provided in your Warranty & Consumer Information manual.

Repairs and adjustments required as a result of improper maintenance or a lack of required maintenance are not covered.

We recommend you have your vehicle maintained and repaired by an authorized Kia dealer. An authorized Kia dealer meets Kia’s high service quality standards and receives technical support from Kia in order to provide you with a high level of service satisfaction.

Owner maintenance precautions

Improper or incomplete service may result in problems. This section gives instructions only for the maintenance items that are easy to perform.

As explained earlier in this section, several procedures can be done only by an authorized Kia dealer with special tools.

✻ NOTICE

Improper owner maintenance during the warranty period may affect warranty coverage. For details, read the separate Warranty & Consumer Information manual provided with the vehicle. If you're unsure about any servicing or maintenance procedure, have it done by an authorized Kia dealer.

⚠ WARNING - Maintenance work

Do not wear jewelry or loose clothing while working under the hood of your vehicle with the engine running. These items can become entangled in moving parts, if you must run the engine while working under the hood, make certain that you remove all jewelry (especially rings, bracelets, watches, and necklaces) and all neckties, scarves, and similar loose clothing before getting near the engine or cooling fans.

⚠ WARNING - Touching metal parts

Do not touch metal parts (including strut bars) while the engine is operating or hot. Doing so could result in serious bodily injury. Turn the engine off and wait until the metal parts cool down to perform any maintenance work on the vehicle.

OWNER MAINTENANCE

The following lists are vehicle checks and inspections that should be performed by the owner or an authorized Kia dealer at the frequencies indicated to help ensure safe, dependable operation of your vehicle.

Any adverse conditions should be brought to the attention of your dealer as soon as possible.

These Owner Maintenance Checks are generally not covered by warranties and you may be charged for labor, parts and lubricants used.

Owner maintenance schedule

When you stop for fuel:

- Check the engine oil level.
- Check the coolant level in coolant reservoir.
- Check the windshield washer fluid level.
- Look for low or under-inflated tires.

⚠ WARNING - Hot coolant

Be careful when checking your engine coolant level when the engine is hot. Scalding hot coolant and steam may blow out under pressure.

⚠ WARNING

When you open the engine hood, turn the Hybrid system off. If not, it may result in death or serious injury because of the high voltage flow.

While operating your vehicle:

- Note any changes in the sound of the exhaust or any smell of exhaust fumes in the vehicle.
- Check for vibrations in the steering wheel. Notice any increased steering effort or looseness in the steering wheel, or change in its straight-ahead position.
- Notice if your vehicle constantly turns slightly or “pulls” to one side when traveling on smooth, level roads.
- When stopping, listen and check for unusual sounds, pulling to one side, increased brake pedal travel or “hard-to-push” brake pedal.
- If any slipping or changes in the operation of your transaxle occurs, check the transaxle fluid level.
- Check the automatic transaxle P (Park) function.
- Check the parking brake.
- Check for fluid leaks under your vehicle (water dripping from the air conditioning system during or after use is normal).

At least monthly:

- Check the coolant level in the engine coolant reservoir.
- Check the operation of all exterior lights, including the stoplights, turn signals and hazard warning flashers.
- Check the inflation pressures of all tires including the spare for tires that are worn, show uneven wear, or are damaged.
- Check for loose wheel lug nuts.

At least twice a year (i.e., every Spring and Fall) :

- Check the radiator, heater and air conditioning hoses for leaks or damage.
- Check the windshield washer spray and wiper operation. Clean the wiper blades with clean cloth dampened with washer fluid.
- Check the headlight alignment.
- Check the muffler, exhaust pipes, shields and clamps.
- Check the lap/shoulder belts for wear and function.

At least once a year :

- Clean the body and door drain holes.
- Lubricate the door hinges and check the hood hinges.
- Lubricate the door and hood locks and latches.
- Lubricate the door rubber weatherstrips.
- Check the air conditioning system.
- Inspect and lubricate automatic transaxle linkage and controls.
- Clean the battery and terminals.
- Check the brake fluid level.

SCHEDULED MAINTENANCE SERVICE

Follow the Normal Maintenance Schedule if the vehicle is usually operated where none of the following conditions apply. If any of the following conditions apply, follow the Maintenance Under Severe Usage Conditions.

- Repeatedly driving short distances of less than 8 km (5 miles) in normal temperature or less than 16 km (10 miles) in freezing temperature.
- Extensive engine idling or low speed driving for long distances.
- Driving on rough, dusty, muddy, unpaved, graveled or salt-spread roads.
- Driving in areas using salt or other corrosive materials or in very cold weather.
- Driving in heavy dust conditions.
- Driving in heavy traffic areas.
- Driving on uphill, downhill, or mountain roads repeatedly.
- Towing a trailer or using a camper on roof rack.
- Driving for patrol car, taxi, other commercial use of vehicle towing.
- Driving over 170 km/h (106 mph).
- Frequently driving in stop-and-go conditions.

If your vehicle is operated in any of the prior listed conditions, you should inspect, replace or refill more frequently, using the severe usage maintenance schedule instead of the normal usage maintenance schedule.

Normal Maintenance Schedule - Non Turbo Model

The following maintenance services must be performed to ensure good emission control and performance.
Keep receipts for all vehicle emission services to protect your warranty. Where both mileage and time are shown, the frequency of service is determined by whichever occurs first.

MAINTENANCE INTERVALS / MAINTENANCE ITEM	Number of months or driving distance, whichever comes first															
	Months	**12**	**24**	**36**	**48**	**60**	**72**	**84**	**96**	**108**	**120**	**132**	**144**	**156**	**168**	**180**
	Miles×1,000	**7.5**	**15**	**22.5**	**30**	**37.5**	**45**	**52.5**	**60**	**67.5**	**75**	**82.5**	**90**	**97.5**	**105**	**112.5**
	Km×1,000	**12**	**24**	**36**	**48**	**60**	**72**	**84**	**96**	**108**	**120**	**132**	**144**	**156**	**168**	**180**
Engine oil and engine oil filter	Nu 2.0L GDI	R	R	R	R	R	R	R	R	R	R	R	R	R	R	R
Fuel additives *1		Add every 12,000 km (7,500 miles) or 12 months														
Air cleaner filter		I	I	I	R	I	I	I	R	I	I	I	R	I	I	I
Spark plugs	Nu 2.0L GDI	Replace every 156,000 km (97,500 miles)														
Rotate tires		Rotate every 12,000 km (7,500 miles)														
Climate control air filter		R	R	R	R	R	R	R	R	R	R	R	R	R	R	R
Vacuum hose		I	I	I	I	I	I	I	I	I	I	I	I	I	I	I

I : Inspect and if necessary, adjust, correct, clean or replace.

R : Replace or change.

*1 : If TOP TIER Detergent Gasoline is not available, one bottle of additive is recommended. Additives are available from your authorized Kia dealer along with information on how to use them. Do not mix other additives.

Normal Maintenance Schedule - Non Turbo Model (CONT.)

MAINTENANCE INTERVALS / MAINTENANCE ITEM	Number of months or driving distance, whichever comes first														
	Months	**12**	**24**	**36**	**48**	**60**	**72**	**84**	**96**	**108**	**120**	**132**	**144**	**156**	**168**	**180**
	Miles×1,000	**7.5**	**15**	**22.5**	**30**	**37.5**	**45**	**52.5**	**60**	**67.5**	**75**	**82.5**	**90**	**97.5**	**105**	**112.5**
	Km×1,000	**12**	**24**	**36**	**48**	**60**	**72**	**84**	**96**	**108**	**120**	**132**	**144**	**156**	**168**	**180**
Coolant (Engine/Inverter)	At first, replace at 192,000 km (120,000 miles) or 10 years, after that, replace every 48,000 km (30,000 miles) or 24 months														
HSG belt *2	I	I	I	R	I	I	I	R	I	I	I	R	I	I	I
Brake lines, hoses and connections (Including booster)	Inspect every 24,000km (15,000 miles) or 12 months														
Brake discs and pads	I	I	I	I	I	I	I	I	I	I	I	I	I	I	I
Steering gear rack, linkage and boots	I	I	I	I	I	I	I	I	I	I	I	I	I	I	I
Driveshaft and boots	I	I	I	I	I	I	I	I	I	I	I	I	I	I	I
Suspension ball joints	I	I	I	I	I	I	I	I	I	I	I	I	I	I	I
Air conditioner compressor/refrigerant	I	I	I	I	I	I	I	I	I	I	I	I	I	I	I
Exhaust system	I	I	I	I	I	I	I	I	I	I	I	I	I	I	I
Cooling system	-	-	-	I	-	I	-	I	-	I	-	I	-	I	-

I : Inspect and if necessary, adjust, correct, clean or replace.

R : Replace or change.

*2 : Inspect HSG belt for evidence of cuts, cracks, excessive wear or oil saturation and replace if necessary. If HSG belt noise occurred, readjust HSG belt tension before replace.

Normal Maintenance Schedule - Non Turbo Model (CONT.)

MAINTENANCE INTERVALS / MAINTENANCE ITEM	Number of months or driving distance, whichever comes first															
	Months	**12**	**24**	**36**	**48**	**60**	**72**	**84**	**96**	**108**	**120**	**132**	**144**	**156**	**168**	**180**
	Miles×1,000	**7.5**	**15**	**22.5**	**30**	**37.5**	**45**	**52.5**	**60**	**67.5**	**75**	**82.5**	**90**	**97.5**	**105**	**112.5**
	Km×1,000	**12**	**24**	**36**	**48**	**60**	**72**	**84**	**96**	**108**	**120**	**132**	**144**	**156**	**168**	**180**
Automatic transmission fluid	No check, No service required															
Vapor hose and fuel filler cap	-	I	-	I	-	I	-	I	-	I	-	I	-	I	-
Fuel tank air filter *3	-	I	-	I	-	I	-	I	-	I	-	I	-	I	-
Fuel lines, hoses and connections	-	-	-	I	-	-	-	I	-	-	-	I	-	-	-
Parking brake (Foot Type)	-	I	-	I	-	I	-	I	-	I	-	I	-	I	-
Brake fluid	-	I	-	I	-	I	-	I	-	I	-	I	-	I	-
Cooling system hoses and connections	Inspect every 12,000 km (7,500 miles) or 6 months															
Brake pedal free play	Inspect every 12,000 km (7,500 miles) or 6 months															
All latch, hinges and locks	Inspect every 24,000 km (15,000 miles) or 12 months															

I : Inspect and if necessary, adjust, correct, clean or replace.

R : Replace or change.

*3 : Fuel tank air filter are considered to generally be maintenance free but periodic inspection is recommended under this maintenance schedule depending on fuel quality.

Maintenance Under Severe Usage Conditions - Non Turbo Model

The following items must be serviced more frequently on cars normally used under severe driving conditions. Refer to the chart below for the appropriate maintenance intervals.

R : Replace I : Inspect and, after inspection, clean, adjust, repair or replace if necessary

MAINTENANCE ITEM		MAINTENANCE OPERATION	MAINTENANCE INTERVALS	DRIVING CONDITION
Engine oil and engine oil filter	Nu 2.0L GDI	R	Every 6,000 km (3,750 miles) or 6 months	A, B, C, D, E, F, G, H, I, J, K
Air cleaner filter		R	More frequently	C, E
Spark plugs		R	More frequently	A, B, F, G, H, I, K
Automatic transmission fluid		R	Every 96,000 km (60,000 miles)	A, C, D, E, F, G, H, I, J
HSG (Hybrid Starter & Generator) belt		R	Every 48,000 km (30,000 miles) or 24 months	C, D, E, K
		I	Every 6,000 km (3,750 miles) or 6 months	C, D, E, K
Brake discs and pads, calipers and rotors		I	More frequently	C, D, E, G, H
Parking brake (Foot Type)		I	More frequently	C, D, G, H
Steering gear rack, linkage and boots		I	More frequently	C, D, E, F, G
Suspension ball joints		I	More frequently	C, D, E, F, G

MAINTENANCE ITEM	MAINTENANCE OPERATION	MAINTENANCE INTERVALS	DRIVING CONDITION
Drive shafts and boots	I	Every 12,000 km (7,500 miles) or 6 months	C, D, E, F, G, H, I, J
Climate control air filter	R	More frequently	C, E, G

Severe driving conditions

A - Repeatedly driving short distances of less than 8 km (5 miles) in normal temperature or less than 16 km (10 miles) in freezing temperature

B - Extensive engine idling or low speed driving for long distances

C - Driving on rough, dusty, muddy, unpaved, graveled or salt-spread roads

D - Driving in areas using salt or other corrosive materials or in very cold weather

E - Driving in heavy dust conditions

F - Driving in heavy traffic areas

G - Driving on uphill, downhill, or mountain roads repeatedly

H - Towing a Trailer, or using a camper, or roof rack

I - Driving as a patrol car, taxi, other commercial use or vehicle towing

J - Driving over 170 km/h (106 mph)

K - Frequently driving in stop-and-go conditions

EXPLANATION OF SCHEDULED MAINTENANCE ITEMS

Engine oil and filter

The engine oil and filter should be changed at the intervals specified in the maintenance schedule. If the vehicle is being driven in severe conditions, more frequent oil and filter changes are required.

HSG (Hybrid starter & generator) belt

The HSG belt should be changed at the intervals specified in the maintenance schedule.

Fuel filter (for gasoline)

Kia gasoline vehicles are equipped a lifetime fuel filter that integrated with the fuel tank. Regular maintenance or replacement is generally not needed but depends on fuel quality. If there are some important fuel related problems like fuel flow restriction, surging, loss of power, hard starting problem etc, fuel filter inspection or replace is needed.

The fuel filter be Inspected or replaced by an authorized Kia dealer.

Fuel lines, fuel hoses and connections

Check the fuel lines, fuel hoses and connections for leakage and damage. Have an authorized Kia dealer replace any damaged or leaking parts immediately.

Vapor hose and fuel filler cap

The vapor hose and fuel filler cap should be inspected at those intervals specified in the maintenance schedule. Make sure that a new vapor hose or fuel filler cap is correctly replaced.

Vacuum crankcase ventilation hoses

Inspect the surface of hoses for evidence of heat and/or mechanical damage. Hard and brittle rubber, cracking, tears, cuts, abrasions, and excessive swelling indicate deterioration. Particular attention should be paid to examine those hose surfaces nearest to high heat sources, such as the exhaust manifold.

Inspect the hose routing to assure that the hoses do not come in contact with any heat source, sharp edges or moving component which might cause heat damage or mechanical wear. Inspect all hose connections, such as clamps and couplings, to make sure they are secure, and that no leaks are present. Hoses should be replaced immediately if there is any evidence of deterioration or damage.

Air cleaner filter

A Genuine Kia air cleaner filter is recommended when the filter is replaced.

Spark plugs

Make sure to install new spark plugs of the correct heat range.

Cooling system

Check the cooling system components, such as the radiator, coolant reservoir, hoses and connections for leakage and damage. Replace any damaged parts.

Coolant (Engine / Inverter)

The coolant should be changed at the intervals specified in the maintenance schedule.

Automatic transaxle fluid

Automatic transaxle fluid should not be checked under normal usage conditions.

But in severe conditions, the fluid should be changed at an authorized Kia dealer in accordance to the scheduled maintenance at the beginning of this chapter.

✻ NOTICE

Automatic transaxle fluid color is reddish.
As the vehicle is driven, the automatic transaxle fluid will begin to look darker.
It is normal condition and you should not judge the need to replace the fluid based upon the changed color.

⚠ CAUTION

Use only specified automatic transaxle fluid. The use of a non-specified fluid could result in a transaxle malfunction and failure. (Refer to "Recommended lubricants and capacities" in chapter 9.)

Brake hoses and lines

Visually check for proper installation, chafing, cracks, deterioration and any leakage. Replace any deteriorated or damaged parts immediately.

Brake fluid

Check the brake fluid level in the brake fluid reservoir. The level should be between “MIN” and “MAX” marks on the side of the reservoir. Use only hydraulic brake fluid conforming to DOT 3 or DOT 4 specification.

Parking brake

Inspect the parking brake system including the parking brake pedal and cables.

Brake discs, pads, calipers and rotors

Check the pads for excessive wear, discs for run out and wear, and calipers for fluid leakage.

Exhaust pipe and muffler

Visually inspect the exhaust pipes, muffler and hangers for cracks, deterioration, or damage. Start the engine and listen carefully for any exhaust gas leakage. Tighten connections or replace parts as necessary.

Suspension mounting bolts

Check the suspension connections for looseness or damage. Retighten to the specified torque.

Steering gear box, linkage & boots/lower arm ball joint

With the vehicle stopped and engine off, check for excessive free-play in the steering wheel.

Check the linkage for bends or damage. Check the dust boots and ball joints for deterioration, cracks, or damage. Replace any damaged parts.

Drive shafts and boots

Check the drive shafts, boots and clamps for cracks, deterioration, or damage. Replace any damaged parts and, if necessary, repack the grease.

Air conditioning refrigerant

Check the air conditioning lines and connections for leakage and damage.

CHECKING FLUID LEVELS

When checking engine oil, engine coolant, brake fluid, and washer fluid, always be sure to clean the area around any filler plug, drain plug, or dipstick before checking or draining any lubricant or fluid. This is especially important in dusty or sandy areas and when the vehicle is used on unpaved roads. Cleaning the plug and dipstick areas will prevent dirt and grit from entering the engine and other mechanisms that could be damaged.

ENGINE OIL

Checking the engine oil level

■ Gasoline Engine (Nu 2.0L - GDI)

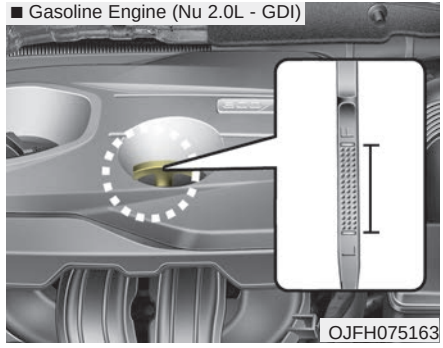

OJFH075163

1. Be sure the vehicle is on level ground.
2. Start the engine and allow it to reach normal operating temperature.
3. Turn the engine off and wait for a few minutes (about 5 minutes) for the oil to return to the oil pan.
4. Pull the dipstick out, wipe it clean, and reinsert it fully.

⚠ WARNING - Radiator hose

Be very careful not to touch the radiator hose when checking or adding the engine oil as it may be hot enough to burn you.

5. Pull the dipstick out again and check the level. The level should be between F and L.

⚠ CAUTION - Replacing engine oil

Do not overfill the engine oil. It may damage the engine.

■ Gasoline Engine (Nu 2.0L - GDI)

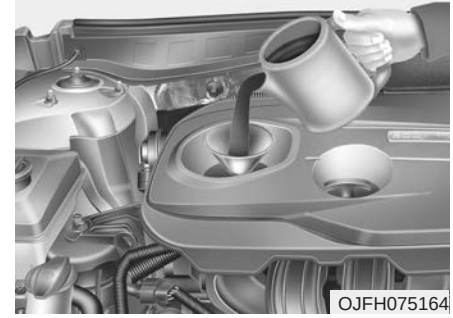

OJFH075164

If it is near or at L, add enough oil to bring the level to F. **Do not overfill.**

Use a funnel to help prevent oil from being spilled on engine components.

Use only the specified engine oil. (Refer to "Recommended lubricants and capacities" in chapter 9.)

Changing the engine oil and filter

Have engine oil and filter changed by an authorized Kia dealer according to the Maintenance Schedule at the beginning of this chapter.

⚠ WARNING - Used engine oil

Used engine oil may cause irritation or cancer of the skin if left in contact with the skin for prolonged periods of time. Always protect your skin by washing your hands thoroughly with soap and warm water as soon as possible after handling used oil.

ENGINE MAINTENANCE MODE(FOR PLUG-IN HYBRID)

Starting Engine Maintenance Mode

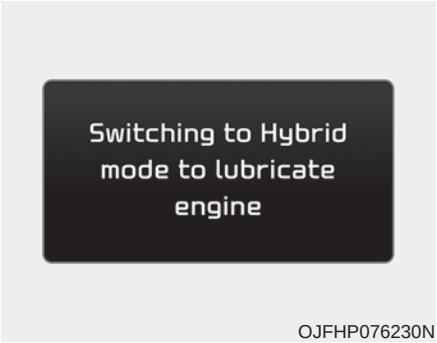

OJFHP076230N

To prevent damage of the engine lubrication system when the engine has not been started for a long time:

- When the engine is started after 5 weeks of being turned off, the engine maintenance mode will operate.
- When the engine maintenance mode is operated, HEV mode will be kept on after the engine is ON and the above message will be displayed on the cluster.

If you press the HEV switch to shift EV mode during engine maintenance mode, the above message will appear due to priority of the engine maintenance mode.

Stopping Engine Maintenance Mode

OJFHP076229N

The engine will automatically stop after sufficient heating. If the engine is turned OFF without sufficient heating, the engine maintenance mode will be operated once more.

COOLANT

The high-pressure cooling system has a reservoir filled with year round antifreeze coolant. The reservoir is filled at the factory.

Check the antifreeze protection and coolant level at least once a year: at the beginning of the winter season, and before traveling to a colder climate.

⚠ CAUTION - Radiator cap

Never attempt to remove the radiator cap while the engine is operating or hot. Doing so might lead to cooling system and engine damage.

Checking the coolant level

⚠ WARNING

Removing radiator cap

Never attempt to remove the radiator cap while the engine is operating or hot. Doing so might lead to cooling system and engine damage and could result in serious personal injury from escaping hot coolant or steam.

- Turn the engine off and wait until it cools down. Use extreme care when removing the radiator cap. Wrap a thick towel around it, and turn it counterclockwise slowly to the first stop. Step back while the pressure is released from the cooling system.

  When you are sure all the pressure has been released, press down on the cap, using a thick towel, and continue turning counterclockwise to remove it.
- Even if the engine is not operating, do not remove the radiator cap or the drain plug while the engine and radiator are hot. Hot coolant and steam may still blow out under pressure, causing serious injury.

  The engine coolant and/or inverter coolant level is influenced by the hybrid system temperature. Before checking or refilling the engine coolant and/or inverter coolant, turn the hybrid vehicle off.

⚠ WARNING - Cooling fan

Use caution when working near the blade of the cooling fan. The electric motor (cooling fan) is controlled by engine coolant temperature, refrigerant pressure and vehicle speed. it may sometimes operate even when the engine is not running.

Engine coolant

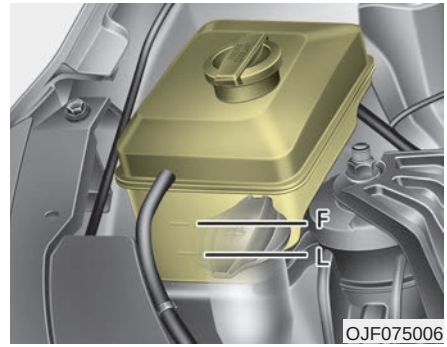

OJF075006

Check the condition and connections of all cooling system hoses and heater hoses. Replace any swollen or deteriorated hoses.

The coolant level should be filled between F and L marks on the side of the coolant reservoir when the engine is cool.

If the coolant level is low, add enough specified coolant to provide protection against freezing and corrosion. Bring the level to F, but do not overfill. If frequent additions are required, see an authorized Kia dealer for a cooling system inspection.

Inverter coolant

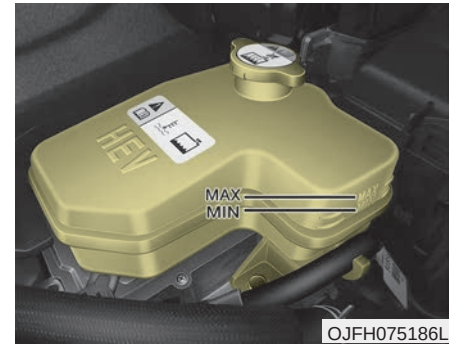

OJFH075186L

The coolant level should be filled between MAX and MIN marks on the side of the coolant reservoir when the engine is cool.

If the coolant level is low, add enough specified coolant to provide protection against freezing and corrosion. Bring the level to MAX, but do not overfill. If frequent additions are required, see an authorized Kia dealer for a cooling system inspection.

Recommended coolant

- When adding coolant, use only deionized water or soft water for your vehicle and never mix hard water in the coolant filled at the factory. An improper coolant mixture can result in serious malfunction or engine damage.
- The engine in your vehicle has aluminum engine parts and must be protected by an ethylene-glycol with phosphate based coolant to prevent corrosion and freezing.
- DO NOT USE alcohol or methanol coolant or mix them with the specified coolant.
- Do not use a solution that contains more than 60% antifreeze or less than 35% antifreeze. This would reduce the effectiveness of the solution.

For mixture percentage, refer to the following table.

Ambient Temperature	Mixture Percentage (volume)	
	Antifreeze	Water
-15°C (5°F)	35	65
-25°C (-13°F)	40	60
-35°C (-31°F)	50	50
-45°C (-49°F)	60	40

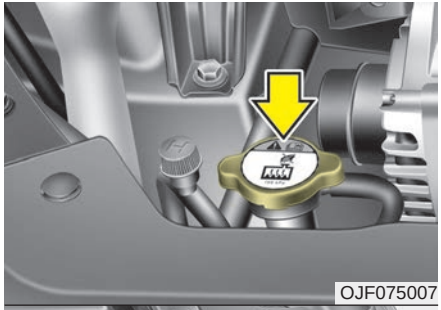
OJF075007

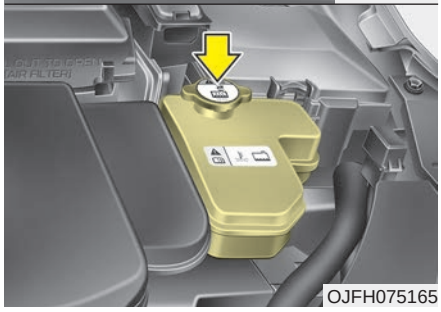
OJFH075165

⚠ WARNING

Radiator cap

Do not remove the radiator cap when the engine and radiator are hot. Scalding hot coolant and steam may blow out under pressure which may result in serious injury.

Changing the coolant

Have the coolant changed by an authorized Kia dealer according to the Maintenance Schedule at the beginning of this chapter.

⚠ CAUTION

Put a thick cloth or fabric around the radiator cap before refilling the coolant in order to prevent the coolant from overflowing into engine parts such as the generator.

BRAKE FLUID

Checking the brake fluid level

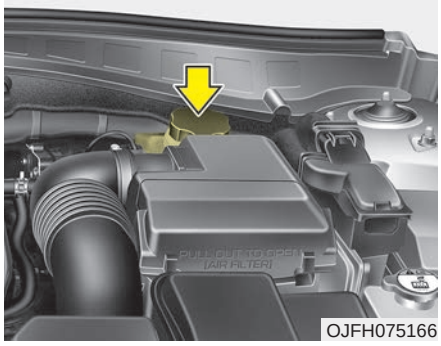

OJFH075166

Check the fluid level in the reservoir periodically. The fluid level should be between MAX (Maximum) and MIN (Minimum) marks on the side of the reservoir.

Before removing the reservoir cap and adding brake fluid, clean the area around the reservoir cap thoroughly to prevent brake fluid contamination.

⚠ CAUTION - Proper fluid

Only use brake fluid in the brake system. Small amounts of improper fluids (such as engine oil) can cause damage to the brake system.

If the level is low, add fluid to the MAX (Maximum) level. The level will fall with accumulated mileage. This is a normal condition associated with the wear of brake linings. If the fluid level is excessively low, have the brake system checked by an authorized Kia dealer.

Use only the specified brake fluid. (Refer to "Recommended lubricants and capacities" in chapter 9.)

Never mix different types of fluid.

In the event the brake system requires frequent additions of fluid, the vehicle should be inspected by an authorized Kia dealer.

When changing and adding brake fluid, handle it carefully. Do not let it come in contact with your eyes. If brake fluid should come in contact with your eyes, immediately flush them with a large quantity of fresh tap water. Have your eyes examined by a doctor as soon as possible.

⚠ CAUTION - Brake fluid

Do not allow brake fluid to contact the vehicle's body paint, as paint damage will result.

Brake fluid, which has been exposed to open air for an extended time should never be used as its quality cannot be guaranteed. It should be disposed of properly.

WASHER FLUID

Checking the washer fluid level

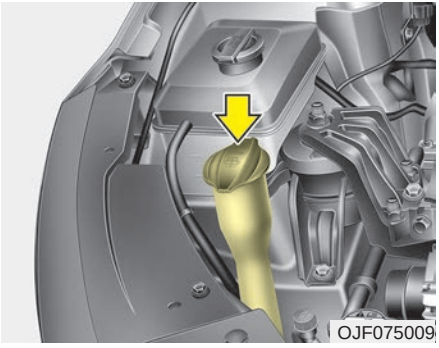

The reservoir is translucent so that you can check the level with a quick visual inspection.

Check the fluid level in the washer fluid reservoir and add fluid if necessary. Plain water may be used if washer fluid is not available. However, use washer solvent with antifreeze characteristics in cold climates to prevent freezing.

⚠ WARNING - Flammable fluid

Do not allow the washer fluid to come in contact with open flames or sparks. The windshield washer fluid reservoir is flammable under certain circumstances. This can result in a fire.

⚠ WARNING - Coolant

- **Do not use radiator coolant or antifreeze in the washer fluid reservoir.**
- **Radiator coolant can severely obscure visibility when sprayed on the windshield and may cause loss of vehicle control.**

⚠ WARNING - Windshield fluid

Do not drink the windshield washer fluid. The windshield washer fluid is poisonous to humans and animals.

PARKING BRAKE

Checking the parking brake

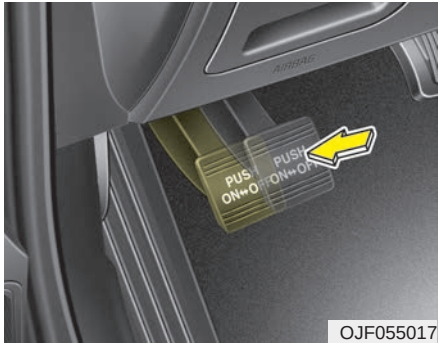

OJF055017

Check whether the stroke is within specification when the parking brake pedal is depressed with 30 kg, 294 N (66 lb) of force. Also, the parking brake alone should securely hold the vehicle on a fairly steep grade. If the stroke is more or less than specified, have the parking brake adjusted by an authorized Kia dealer.

Stroke : 6~7 notch

AIR CLEANER

Filter replacement

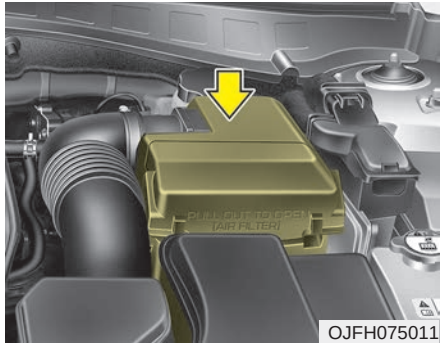

OJFH075011

The air filter must be replaced when necessary, and should not be washed.

You can clean the filter when inspecting the air cleaner element.

Clean the filter by using compressed air.

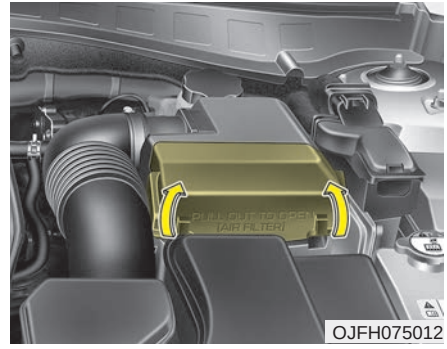

OJFH075012

1. Pull out the air cleaner cover.

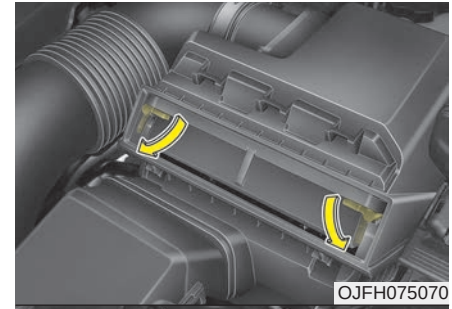
OJFH075070

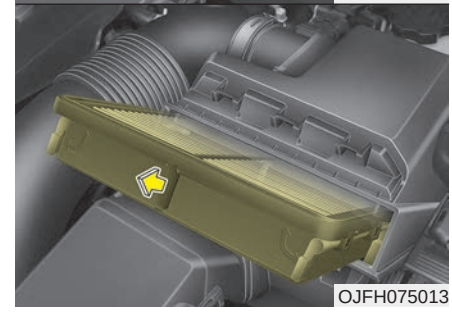
OJFH075013

2. Unlock by turning the locking lever downward.
3. Pull the air cleaner filter to replace.
4. Lock the cover with the reverse order.

Replace the filter according to the Maintenance Schedule.

If the vehicle is operated in extremely dusty or sandy areas, replace the element more often than the usual recommended intervals. (Refer to "Maintenance under severe usage conditions" in this chapter.)

⚠ CAUTION - Air filter maintenance

- ***Do not drive with the air cleaner removed; this will result in excessive engine wear.***
- ***When removing the air cleaner filter, be careful that dust or dirt does not enter the air intake, or damage may result.***
- ***Use a Kia genuine part. Use of a non-genuine part could damage the air flow sensor.***

CLIMATE CONTROL AIR FILTER (IF EQUIPPED)

Filter inspection

The climate control air filter should be replaced according to the Maintenance Schedule. If the vehicle is operated in severely air-polluted cities or on dusty rough roads for a long period, it should be inspected more frequently and replaced earlier. When you replace the climate control air filter, replace it performing the following procedure, and be careful to avoid damaging other components.

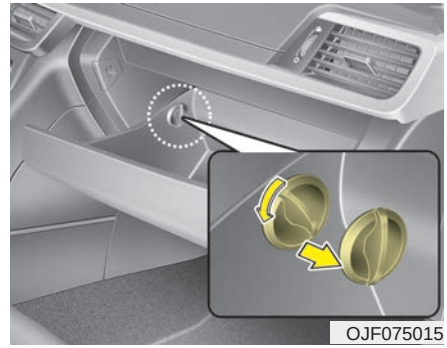

1. Open the glove box and remove the stoppers on both sides.

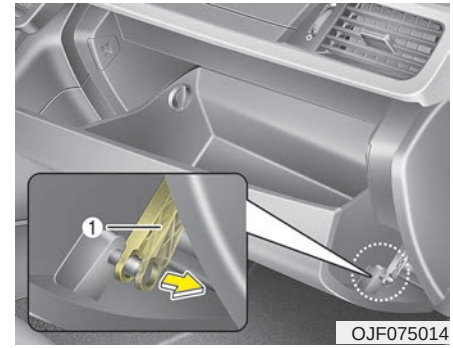

2. With the glove box open, pull the support strap (1).

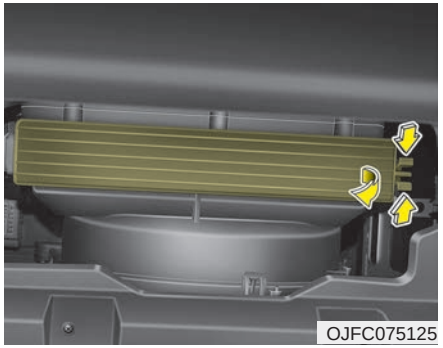
OJFC075125

3. Remove the climate control air filter cover while pressing the lock on the right side of the cover.

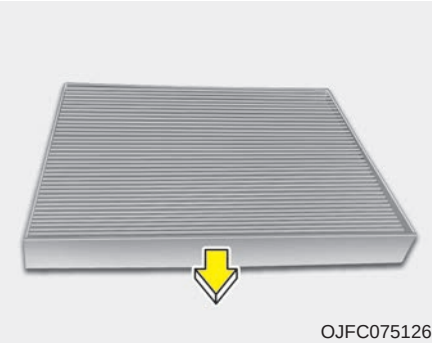
OJFC075126

4. Replace the climate control air filter.
5. Reassemble in the reverse order of disassembly.

When replacing the climate control air filter install it properly. Otherwise, the system may produce noise and the effectiveness of the filter may be reduced.

WIPER BLADES

Blade inspection

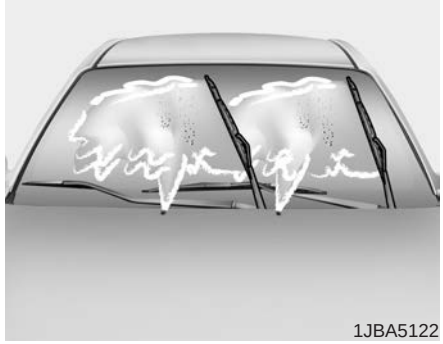

Commercial hot waxes applied by automatic car washes have been known to make the windshield difficult to clean.

Contamination of either the windshield or the wiper blades with foreign matter can reduce the effectiveness of the windshield wipers. Common sources of contamination are insects, tree sap, and hot wax treatments used by some commercial car washes. If the blades are not wiping properly, clean both the window and the blades with a good cleaner or mild detergent, and rinse thoroughly with clean water.

⚠ **CAUTION - Wiper blades**

To prevent damage to the wiper blades, do not use gasoline, kerosene, paint thinner, or other solvents on or near them.

Blade replacement

When the wipers no longer clean adequately, the blades may be worn or cracked, and require replacement.

To prevent damage to the wiper arms or other components, do not attempt to move the wipers manually.

Aftermarket wiper blades may result in wiper malfunction and/or failure. It is recommended to use certified Kia parts.

Front windshield wiper blade

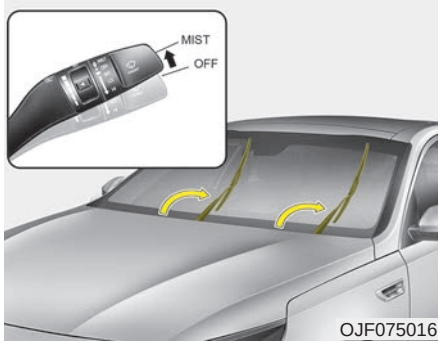

To inspect or replace the windshield wiper blades and to prevent damaging the hood, move the windshield wiper blades to the service position as follows:

After turning off the engine, move the wiper switch to the single wiping (MIST) position within 20 seconds and hold the switch more than 2 seconds until the wiper blade is in the fully up position.

⚠ CAUTION - Wiper arms

Do not allow the wiper arm to fall against the windshield, since it may chip or crack the windshield.

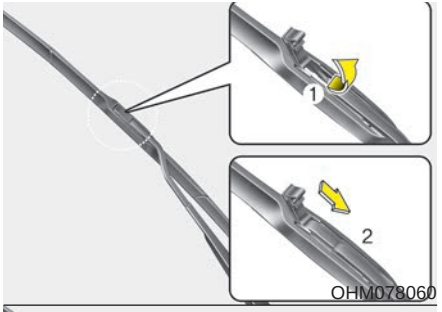

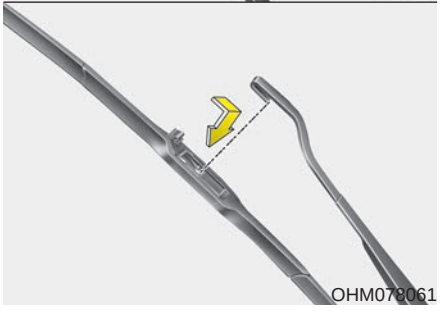

Type A

1. Raise the wiper arm.
2. Lift up the wiper blade clip. Then pull down the blade assembly and remove it.
3. Install the new blade assembly.

4. Return the wiper arm on the windshield.
5. Turn the engine start/stop button to the ON position and wiper arms will return to the normal operating position.

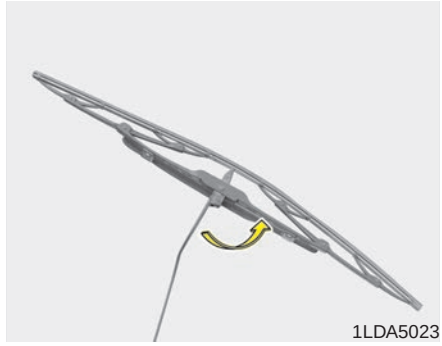

Type B

1. Raise the wiper arm and turn the wiper blade assembly to expose the plastic locking clip.

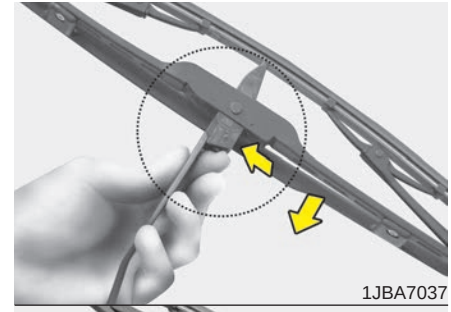

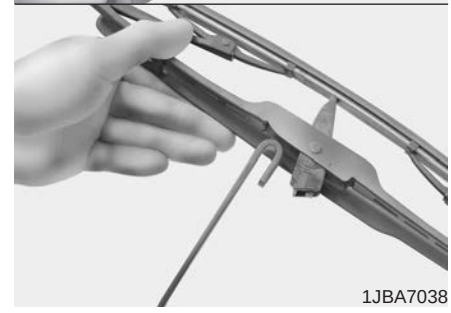

2. Compress the clip and slide the blade assembly downward.
3. Lift it off the arm.
4. Install the new blade assembly.

5. Return the wiper arm on the windshield.
6. Turn the engine start/stop button to the ON position and wiper arms will return to the normal operating position.

BATTERY

For best battery service

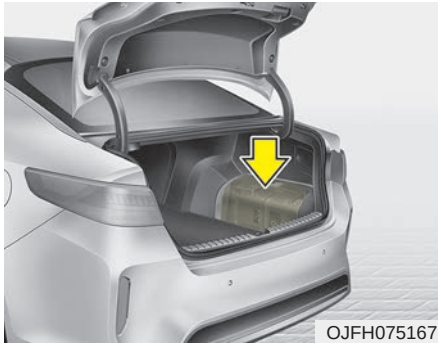

- Keep the battery securely mounted.
- Keep the battery top clean and dry.
- Keep the terminals and connections clean, tight, and coated with petroleum jelly or terminal grease.
- Rinse any spilled electrolyte from the battery immediately with a solution of water and baking soda.
- If the vehicle is not going to be used for an extended time, disconnect the battery cables.

⚠ WARNING - Risk of explosion

Keep lit cigarettes and all other flames or sparks away from the battery.

The battery contains hydrogen -- a highly combustible gas which will explode if it comes in contact with a flame or spark.

Keep batteries out of the reach of children because batteries contain highly corrosive SULFURIC ACID and electrolytes. Do not allow battery acid to contact your skin, eyes, clothing or paint finish.

Wear eye protection when charging or working near a battery. Always provide ventilation when working in an enclosed space.

Always read the following instructions carefully when handling a battery.

If any electrolyte gets into your eyes, flush your eyes with clean water for at least 15 minutes and get immediate medical attention.

If electrolyte gets on your skin, thoroughly wash the contacted area. If you feel pain or burning sensation, get medical attention immediately.

An inappropriately disposed battery can be harmful to the environment and human health. Dispose the battery according to your local law(s) or regulation.

The battery contains lead. Do not dispose of it after use. Please return the battery to an authorized Kia dealer to be recycled.

Never attempt to recharge the battery when the battery cables are connected.

⚠ WARNING - Risk of electrocution

Never touch the electrical ignition system while the vehicle is running. This system works with high voltage which can shock you.

⚠ WARNING - Recharging Battery

Never attempt to recharge the battery when the battery cables are connected.

⚠ WARNING - Battery lead compound

Battery posts, terminals, and related accessories contain lead and lead compounds.

Wash hands after handling.

✻ NOTICE

If you connect unauthorized electronic devices to the battery, the battery may be discharged. Never use unauthorized devices.

Recharging the battery

Your vehicle has a maintenance-free, calcium-based battery.

- If the battery becomes discharged in a short time (because, for example, the headlamps or interior lamps were left on while the vehicle was not in use), recharge it by slow charging (trickle) for 10 hours.
- If the battery gradually discharges because of high electric load while the vehicle is being used, recharge it at 20-30A for two hours.

When recharging the battery, observe the following precautions:

- The battery must be removed from the vehicle and placed in an area with good ventilation.
- Do not allow cigarettes, sparks, or flame near the battery.
- Watch the battery during charging, and stop or reduce the charging rate if the battery cells begin gassing (boiling) violently or if the temperature of the electrolyte of any cell exceeds 49°C (120°F).
- Wear eye protection when checking the battery during charging.
- Disconnect the battery charger in the following order.

1. Turn off the battery charger main switch.
2. Unhook the negative clamp from the negative battery terminal.
3. Unhook the positive clamp from the positive battery terminal.

- Before performing maintenance or recharging the battery, turn off all accessories and stop the engine.
- The negative battery cable must be removed first and installed last when the battery is disconnected.

Reset items

Items should be reset after the battery has been discharged or the battery has been disconnected.

- Auto up/down window (See chapter 4)
- Sunroof (See chapter 4)
- Trip computer (See chapter 4)
- Climate control system (See chapter 4)
- Driver position memory system (See chapter 3)
- Audio (See chapter 5)

TIRES AND WHEELS

Tire care

For proper maintenance, safety, and maximum fuel economy, you must always maintain recommended tire inflation pressures and stay within the load limits and weight distribution recommended for your vehicle.

Recommended cold tire inflation pressures

All tire pressures (including the spare) should be checked when the tires are cold. “Cold Tires” means the vehicle has not been driven for at least three hours or driven less than 1.6 km (one mile).

Recommended pressures must be maintained for the best ride, top vehicle handling, and minimum tire wear.

For recommended inflation pressure refer to “Tire and wheels” in chapter 9.

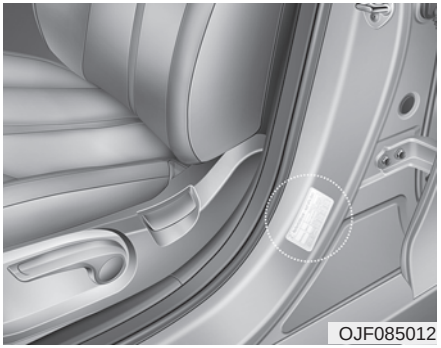

All specifications (sizes and pressures) can be found on a label attached to the driver’s side center pillar.

⚠ WARNING - Tire underinflation

Inflate your tires consistent with the instructions provided in this manual. Regularly check the tire inflation pressure, and correct it as needed: at least twice a month and before any long trips on the road. If you fail to observe this precaution, you may be driving on underinflated tires, which may not only compromise your vehicle's driving stability, but also lead to tire damage and the risk of an accident. This risk is much higher on hot days and when driving for long periods at high speeds.

- Underinflation also results in excessive wear, poor handling and reduced fuel economy. Wheel deformation also is possible. Keep your tire pressures at the proper levels. If a tire frequently needs refilling, have it checked by an authorized Kia dealer.
- Overinflation produces a harsh ride, excessive wear at the center of the tire tread, and a greater possibility of damage from road hazards.
- Warm tires normally exceed recommended cold tire pressures by 28 to 41 kPa (4 to 6 psi). Do not release air from warm tires to adjust the pressure or the tires will be underinflated.
- Be sure to reinstall the tire inflation valve caps. Without the valve cap, dirt or moisture could get into the valve core and cause air leakage. If a valve cap is missing, install a new one as soon as possible.

Tire pressure

Always observe the following:

- Check tire pressure when the tires are cold. (After vehicle has been parked for at least three hours or hasn't been driven more than 1.6 km (one mile) since startup.)
- Check the pressure of your spare tire each time you check the pressure of other tires.
- Never overload your vehicle. Be careful not to overload a vehicle luggage rack if your vehicle is equipped with one.

⚠ WARNING - Tire Inflation

Overinflation or underinflation can reduce tire life, adversely affect vehicle handling, and lead to sudden tire failure. This could result in loss of vehicle control and potential injury.

Checking tire inflation pressure

Check your tires once a month or more.

Also, check the tire pressure of the spare tire.

How to check

Use a good quality gauge to check tire pressure. You cannot tell if your tires are properly inflated simply by looking at them. Radial tires may look properly inflated even when they're underinflated.

Check the tire's inflation pressure when the tires are cold. - "Cold" means your vehicle has been sitting for at least three hours or driven no more than 1.6 km (1 mile).

Remove the valve cap from the tire valve stem. Press the tire gauge firmly onto the valve to get a pressure measurement. If the cold tire inflation pressure matches the recommended pressure on the tire and loading information label, no further adjustment is necessary. If the pressure is low, add air until you reach the recommended amount.

If you overfill the tire, release air by pushing on the metal stem in the center of the tire valve. Recheck the tire pressure with the tire gauge. Be sure to put the valve caps back on the valve stems. They help prevent leaks by keeping out dirt and moisture.

- Inspect your tires frequently for proper inflation as well as wear and damage. Always use a tire pressure gauge.
- Tires with too much or too little pressure wear unevenly causing poor handling, loss of vehicle control, and sudden tire failure leading to accidents, injuries, and even death. The recommended cold tire pressure for your vehicle can be found in this manual and on the tire label located on the driver's side center pillar.
- Remember to check the pressure of your spare tire. Kia recommends that you check the spare every time you check the pressure of the other tires on your vehicle.

Tire rotation

To equalize tread wear, it is recommended that the tires be rotated every 12,000 km (7,500 miles) or sooner if irregular wear develops.

During rotation, check the tires for correct balance.

When rotating tires, check for uneven wear and damage. Abnormal wear is usually caused by incorrect tire pressure, improper wheel alignment, out-of-balance wheels, severe braking or severe cornering. Look for bumps or bulges in the tread or side of tire. Replace the tire if you find either of these conditions. Replace the tire if fabric or cord is visible. After rotation, be sure to bring the front and rear tire pressures to specification and check lug nut tightness.

Refer to “Tire and wheels” in chapter 9.

Without a spare tire

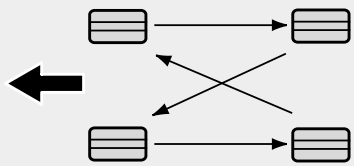

S2BLA790A

Directional tires (if equipped)

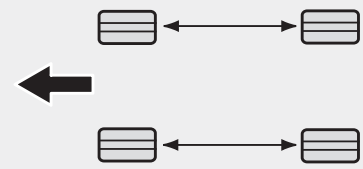

CBGQ0707A

Disc brake pads should be inspected for wear whenever tires are rotated.

Rotate radial tires that have an asymmetric tread pattern only from front to rear and not from right to left.

⚠ WARNING - Mixing tires

- **Do not use the compact spare tire (if equipped) for tire rotation.**
- **Do not mix bias ply and radial ply tires under any circumstances. This may cause unusual handling characteristics.**

Wheel alignment and tire balance

The wheels on your vehicle were aligned and balanced carefully at the factory to give you the longest tire life and best overall performance.

In most cases, you will not need to have your wheels aligned again. However, if you notice unusual tire wear or your vehicle pulling one way or the other, the alignment may need to be reset.

If you notice your vehicle vibrating when driving on a smooth road, your wheels may need to be rebalanced.

⚠ CAUTION - Wheel weight

Improper wheel weights can damage your vehicle's aluminum wheels. Use only approved wheel weights.

Tire replacement

If the tire is worn evenly, a tread wear Indicator (A) will appear as a solid band across the tread. This shows there is less than 1.6 mm (1/16 inch) of tread left on the tire. Replace the tire when this happens.

Do not wait for the band to appear across the entire tread before replacing the tire.

The ABS works by comparing the speed of the wheels. The tire size affects wheel speed. When replacing tires, all 4 tires must use the same size originally supplied with the vehicle. Using tires of a different size can cause the ABS (Anti-lock Brake System) and ESC (Electronic Stability Control) to work irregularly.

✻ NOTICE

We recommend that when replacing tires, use the same which were originally supplied with the vehicle. If not, driving performance could be altered.

Wheel replacement

When replacing the metal wheels for any reason, make sure the new wheels are equivalent to the original factory units in diameter, rim width and offset.

A wheel that is not the correct size may adversely affect wheel and bearing life, braking and stopping abilities, handling characteristics, ground clearance, body-to-tire clearance, snow chain clearance, speedometer and odometer calibration, headlight aim and bumper height.

⚠ **CAUTION - Wheel**

Wheels that do not meet Kia's specifications may fit poorly and result in damage to the vehicle or unusual handling and poor vehicle control.

Tire traction

Tire traction can be reduced if you drive on worn tires, tires that are improperly inflated or on slippery road surfaces. Tires should be replaced when tread wear indicators appear. Slow down whenever there is rain, snow or ice on the road, to reduce the possibility of losing control of the vehicle.

Tire maintenance

In addition to proper inflation, correct wheel alignment helps to decrease tire wear. If you find a tire is worn unevenly, have your dealer check the wheel alignment.

When you have new tires installed, make sure they are balanced. This will increase vehicle ride comfort and tire life. Additionally, a tire should always be rebalanced if it is removed from the wheel.

Tire sidewall labeling

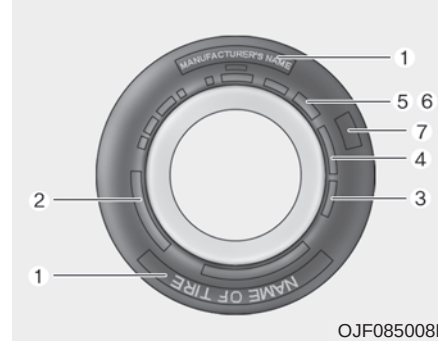

OJF085008L

This information identifies and describes the fundamental characteristics of the tire and also provides the tire identification number (TIN) for safety standard certification. The TIN can be used to identify the tire in case of a recall.

1. Manufacturer or brand name

Manufacturer or Brand name is shown.

2. Tire size designation

A tire's sidewall is marked with a tire size designation. You will need this information when selecting replacement tires for your car. The following explains what the letters and numbers in the tire size designation mean.

Example tire size designation:

(These numbers are provided as an example only; your tire size designator could vary depending on your vehicle.)

P205/55R16 89H

P - Applicable vehicle type (tires marked with the prefix "P" are intended for use on passenger vehicles or light trucks; however, not all tires have this marking).

205 - Tire width in millimeters.

55 - Aspect ratio. The tire's section height as a percentage of its width.

R - Tire construction code (Radial).

16 - Rim diameter in inches.

89 - Load Index, a numerical code associated with the maximum load the tire can carry.

H - Speed Rating Symbol. See the speed rating chart in this section for additional information.

Wheel size designation

Wheels are also marked with important information that you need if you ever have to replace one. The following explains what the letters and numbers in the wheel size designation mean.

Example wheel size designation:

6.0JX16

6.0 - Rim width in inches.

J - Rim contour designation.

16 - Rim diameter in inches.

Tire speed ratings

The chart below lists many of the different speed ratings currently being used for passenger vehicles. The speed rating is part of the tire size designation on the sidewall of the tire. This symbol corresponds to that tire's designed maximum safe operating speed.

Speed Rating Symbol	Maximum Speed
S	180 km/h (112 mph)
T	190 km/h (118 mph)
H	210 km/h (130 mph)
V	240 km/h (149 mph)
Z	Above 240 km/h (149 mph)

3. Checking tire life (TIN : Tire Identification Number)

Any tires that are over 6 years old, based on the manufacturing date, (including the spare tire) should be replaced by new ones. You can find the manufacturing date on the tire sidewall (possibly on the inside of the wheel), displaying the DOT Code. The DOT Code is a series of numbers on a tire consisting of numbers and English letters. The manufacturing date is designated by the last four digits (characters) of the DOT code.

DOT : XXXX XXXX OOOO

The front part of the DOT means a plant code number, tire size and tread pattern and the last four numbers indicate week and year manufactured.

For example:

DOT XXXX XXXX 1618 represents that the tire was produced in the 16th week of 2018.

⚠ WARNING - Tire age

Replace tires within the recommended time frame. Failure to replace tires as recommended can result in sudden tire failure, which could lead to a loss of control and an accident.

4. Tire ply composition and material

The number of layers or plies of rubber-coated fabric in the tire. Tire manufacturers also must indicate the materials in the tire, which include steel, nylon, polyester, and others. The letter "R" means radial ply construction; the letter "D" means diagonal or bias ply construction; and the letter "B" means belted-bias ply construction.

5. Maximum permissible inflation pressure

This number is the greatest amount of air pressure that should be put in the tire. Do not exceed the maximum permissible inflation pressure. Refer to the Tire and Loading Information label for recommended inflation pressure.

6. Maximum load rating

This number indicates the maximum load in kilograms and pounds that can be carried by the tire. When replacing the tires on the vehicle, always use a tire that has the same load rating as the factory installed tire.

7. Uniform tire quality grading

Quality grades can be found where applicable on the tire sidewall between tread shoulder and maximum section width.

For example:

TREADWEAR 440

TRACTION A

TEMPERATURE A

Tread wear

The tread wear grade is a comparative rating based on the wear rate of the tire when tested under controlled conditions on a specified government test course. For example, a tire graded 150 would wear one-and-a-half times (1½) as well on the government course as a tire graded 100.

The relative performance of tires depends upon the actual conditions of their use, however, and may depart significantly from the norm due to variations in driving habits, service practices and differences in road characteristics and climate.

Tires degrade over time, even when they are not being used. Regardless of the remaining tread, we recommend that tires be replaced after approximately six (6) years of normal service. Heat caused by hot climates or frequent high loading conditions can accelerate the aging process.

These grades are molded on the side-walls of passenger vehicle tires. The tires available as standard or optional equipment on your vehicles may vary with respect to grade.

Traction - AA, A, B & C

The traction grades, from highest to lowest, are AA, A, B and C. Those grades represent the tires ability to stop on wet pavement as measured under controlled conditions on specified government test surfaces of asphalt and concrete. A tire marked C may have poor traction performance.

The traction grade assigned to this tire is based on straight-ahead braking traction tests, and does not include acceleration, cornering, hydroplaning, or peak traction characteristics.

Temperature -A, B & C

The temperature grades are A (the highest), B and C representing the tire's resistance to the generation of heat and its ability to dissipate heat when tested under controlled conditions on a specified indoor laboratory test wheel.

Sustained high temperature can cause the material of the tire to degenerate and reduce tire life, and excessive temperature can lead to sudden tire failure. Grades B and A represent higher levels of performance on the laboratory test wheel than the minimum required by law.

Tire terminology and definitions

Air Pressure: The amount of air inside the tire pressing outward on the tire. Air pressure is expressed in kilopascal (kPa) or pounds per square inch (psi).

Accessory Weight: This means the combined weight of optional accessories. Some examples of optional accessories are, automatic transaxle, power seats, and air conditioning.

Aspect Ratio: The relationship of a tire's height to its width.

Belt: A rubber coated layer of cords that is located between the plies and the tread. Cords may be made from steel or other reinforcing materials.

Bead: The tire bead contains steel wires wrapped by steel cords that hold the tire onto the rim.

Bias Ply Tire: A pneumatic tire in which the plies are laid at alternate angles less than 90 degrees to the centerline of the tread.

Cold Tire Pressure: The amount of air pressure in a tire, measured in kilopascals (kPa) or pounds per square inch (psi) before a tire has built up heat from driving.

Curb Weight: This means the weight of a motor vehicle with standard and optional equipment including the maximum capacity of fuel, oil and coolant, but without passengers and cargo.

DOT Markings: The DOT code includes the Tire Identification Number (TIN), an alphanumeric designator which can also identify the tire manufacturer, production plant, brand and date of production.

GVWR: Gross Vehicle Weight Rating

GAWR FRT: Gross Axle Weight Rating for the Front Axle.

GAWR RR: Gross Axle Weight Rating for the Rear axle.

Intended Outboard Sidewall: The side of an asymmetrical tire, that must always face outward when mounted on a vehicle.

Kilopascal (kPa): The metric unit for air pressure.

Light truck(LT) tire: A tire designated by its manufacturer as primarily intended for use on lightweight trucks or multipurpose passenger vehicles.

Load Index: An assigned number ranging from 1 to 279 that corresponds to the load carrying capacity of a tire.

Load ratings: The maximum load that a tire is rated to carry for a given inflation pressure.

Maximum Inflation Pressure: The maximum air pressure to which a cold tire may be inflated. The maximum air pressure is molded onto the sidewall.

Maximum Load Rating: The load rating for a tire at the maximum permissible inflation pressure for that tire.

Maximum Loaded Vehicle Weight: The sum of curb weight; accessory weight; vehicle capacity weight; and production options weight.

Normal Occupant Weight: The number of occupants a vehicle is designed to seat multiplied by 68kg (150 lbs.).

Occupant Distribution: Designated seating positions.

Outward Facing Sidewall: The side of a asymmetrical tire that has a particular side that faces outward when mounted on a vehicle. The outward facing sidewall bears white lettering or bears manufacturer, brand, and/or model name molding that is higher or deeper than the same moldings on the inner facing sidewall.

Passenger (P-Metric) Tire: A tire used on passenger cars and some light duty trucks and multipurpose vehicles.

Ply: A layer of rubber-coated parallel cords

Pneumatic tire: A mechanical device made of rubber, chemicals, fabric and steel or other materials, that, when mounted on an automotive wheel, provides the traction and contains the gas or fluid that sustains the load.

Production options weight: The combined weight of installed regular production options weighing over 2.3 kg (5 lb.) in excess of the standard items which they replace, not previously considered in curb weight or accessory weight, including heavy duty brakes, ride levelers, roof rack, heavy duty battery, and special trim.

Recommended Inflation Pressure: Vehicle manufacturer's recommended tire inflation pressure and shown on the tire placard.

Radial Ply Tire: A pneumatic tire in which the ply cords that extend to the beads are laid at 90 degrees to the centerline of the tread.

Rim: A metal support for a tire and upon which the tire beads are seated.

Sidewall: The portion of a tire between the tread and the bead.

Speed Rating: An alphanumeric code assigned to a tire indicating the maximum speed at which a tire can operate.

Traction: The friction between the tire and the road surface. The amount of grip provided.

Tread: The portion of a tire that comes into contact with the road.

Treadwear Indicators: Narrow bands, sometimes called "wear bars," that show across the tread of a tire when only 1/16 inch of tread remains.

UTQGS: Uniform Tire Quality Grading Standards, a tire information system that provides consumers with ratings for a tire's traction, temperature and treadwear. Ratings are determined by tire manufacturers using government testing procedures. The ratings are molded into the sidewall of the tire.

Vehicle Capacity Weight: The number of designated seating positions multiplied by 68 kg (150 lbs.) plus the rated cargo and luggage load.

Vehicle Maximum Load on the Tire: Load on an individual tire due to curb and accessory weight plus maximum occupant and cargo weight.

Vehicle Normal Load on the Tire: Load on an individual tire that is determined by distributing to each axle its share of the curb weight, accessory weight, and normal occupant weight and driving by 2.

Vehicle Placard: A label permanently attached to a vehicle showing the original equipment tire size and recommended inflation pressure.

All season tires

Kia specifies all season tires on some models to provide good performance for use all year round, including snowy and icy road conditions. All season tires are identified by ALL SEASON and/or M+S (Mud and Snow) on the tire sidewall. Snow tires have better snow traction than all season tires and may be more appropriate in some areas.

Summer tires

Kia specifies summer tires on some models to provide superior performance on dry roads. Summer tire performance is substantially reduced in snow and ice. Summer tires do not have the tire traction rating M+S (Mud and Snow) on the tire side wall. If you plan to operate your vehicle in snowy or icy conditions, Kia recommends the use of snow tires or all season tires on all four wheels.

⚠ WARNING

Do not use summer tires at temperatures below 7°C (45°F) or when driving on snow or ice. At temperatures below 7°C (45°F), summer tires can lose elasticity, and therefore traction and braking power as well. Change the tires on your vehicle to winter or all-weather tires of the same size as the standard tires of the vehicle. Both types of tires are identified by the M+S (Mud and Snow) marking. Using summer tires at very cold temperatures could cause cracks to form, thereby damaging the tires permanently.

Snow tires

If you equip your car with snow tires, they should be the same size and have the same load capacity as the original tires. Snow tires should be installed on all four wheels; otherwise, poor handling may result.

Snow tires should carry 28 kPa (4 psi) more air pressure than the pressure recommended for the standard tires on the tire label on the driver's side of the center pillar, or up to the maximum pressure shown on the tire sidewall, whichever is less.

Do not drive faster than 120 km/h (75 mph) when your vehicle is equipped with snow tires.

Radial-ply tires

Radial-ply tires provide improved tread life, road hazard resistance and smoother high speed ride. The radial-ply tires used on this vehicle are of belted construction and are selected to complement the ride and handling characteristics of your vehicle.

Radial-ply tires have the same load carrying capacity as bias-ply or bias belted tires of the same size and use the same recommended inflation pressure. Mixing of radial-ply tires with bias-ply or bias belted tires is not recommended. Any combinations of radial-ply and bias-ply or bias belted tires when used on the same vehicle will seriously deteriorate vehicle handling. The best rule to follow is: identical radial-ply tires should always be used as a set of four.

Longer wearing tires can be more susceptible to irregular tread wear. It is very important to follow the tire rotation interval shown in this section to achieve the tread life potential of these tires. Cuts and punctures in radial-ply tires are repairable only in the tread area, because of sidewall flexing. Consult your tire dealer for radial-ply tire repairs.

Low aspect ratio tire (if equipped)

Low aspect ratio tires, whose aspect ratio is lower than 50, are provided for sporty looks.

Because the low aspect ratio tires are optimized for handling and braking, it may be more uncomfortable to ride in and there is more noise compare with normal tires.

⚠ **CAUTION**

Because the sidewall of the low aspect ratio tire is shorter than the normal, the wheel and tire of the low aspect ratio tire is easier to be damaged. So, follow the instructions below.

- ***When driving on a rough road or off road, drive cautiously because tires and wheels may be damaged. And after driving, inspect tires and wheels.***
- ***When passing over a pothole, speed bump, manhole, or curb stone, drive slowly so that the tires and wheels are not damaged.***
- ***If the tire is impacted, we recommend that you inspect the tire condition or contact an authorized Kia dealer.***
- ***To prevent damage to the tire, inspect the tire condition and pressure every 3,000 km (1,900 miles).***

- It is not easy to recognize the tire damage with your own eyes. But if there is the slightest hint of tire damage, even though you cannot see it, have the tire checked or replaced because the tire damage may cause air leakage from the tire.
- If the tire is damaged by driving on a rough road, off road, pothole, manhole, or curb stone, it will not be covered by the warranty.
- You can find out the tire information on the tire sidewall.

FUSES

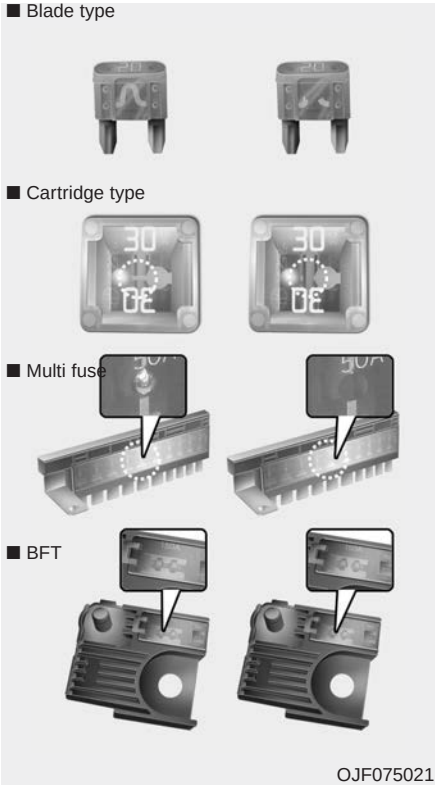

❊ Left side : Normal , Right side : Blown

A vehicle's electrical system is protected from electrical overload damage by fuses.

This vehicle has 2 (or 3) fuse panels, one located in the driver's side panel bolster, the other in the engine compartment near the battery.

If any of your vehicle's lights, accessories, or controls do not work, check the appropriate circuit fuse. If a fuse has blown, the element inside the fuse will melt.

If the electrical system does not work, first check the driver's side fuse panel.

Always replace a blown fuse with one of the same rating.

If the replacement fuse blows, this indicates an electrical problem. Avoid using the system involved and immediately consult an authorized Kia dealer.

Three kinds of fuses are used: blade type for lower amperage rating, cartridge type, and multi fuse for higher amperage ratings.

⚠ WARNING - Fuse replacement

- **Never replace a fuse with anything but another fuse of the same rating.**
- **A higher capacity fuse could cause damage and possibly a fire.**
- **Never install a wire or aluminum foil instead of the proper fuse - even as a temporary repair. It may cause extensive wiring damage and a possible fire.**

- Do not arbitrarily modify or add-on electric wiring to the vehicle.

⚠ CAUTION

Do not use a screwdriver or any other metal object to remove fuses because it may cause a short circuit and damage the system.

✻ NOTICE

- When replacing a fuse, turn the ignition "OFF" and turn off switches of all electrical devices then remove battery (-) terminal.
- The actual fuse/relay panel label may differ from equipped items.

⚠ WARNING - Electrical Fire

Always ensure replacements fuses and relays are securely fastened when installed. Failure to do so can result in a vehicle fire.

⚠ CAUTION

- *When replacing a blown fuse or relay, make sure the new fuse or relay fits tightly into the clips. Failure to tightly install the fuse or relay may cause damage to the wiring and electric systems.*
- *Do not remove fuses, relays and terminals fastened with bolts or nuts. The fuses, relays and terminals may not be fastened correctly which may cause vehicle damage.*

⚠ CAUTION

- *Do not input any other objects except fuses or relays into fuse/relay terminals, such as a driver or wiring. It may cause contact failure and system malfunction.*
- *Do not plug in screwdrivers or aftermarket wiring into the terminal originally designed for fuse and relays only. The electrical system and wiring of the vehicle interior may be damaged or burned due to contact failure.*
- *If you directly connect the wire on the taillight or replace the bulb which is over the regulated capacity to install trailers, etc., the inner junction block can get burned.*

Inner panel fuse replacement

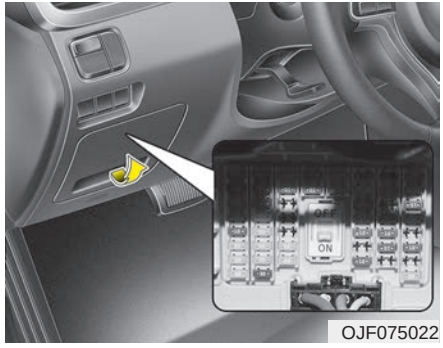

OJF075022

1. Turn the engine start/stop button to the OFF position and all other switches off.
2. Open the fuse panel cover.

If the switch is located in the “OFF” position, a caution indicator will be displayed in the cluster.

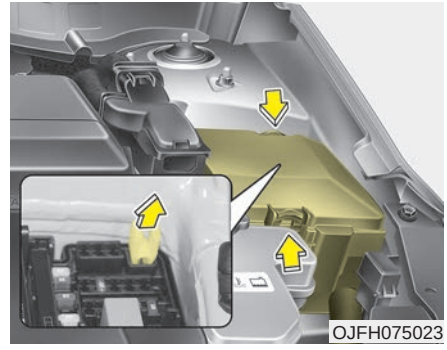
OJFH075023

3. Pull the suspected fuse straight out. Use the removal tool provided on the engine compartment fuse panel cover.
4. Check the removed fuse; replace it if it is blown.

   Spare fuses are provided in the engine compartment fuse panel.
5. Push in a new fuse of the same rating, and make sure it fits tightly in the clips.

If it fits loosely, consult an authorized Kia dealer.

If you do not have a spare, use a fuse of the same rating from a circuit you may not need for operating the vehicle, such as the power outlet fuse.

If the head lamp, turn signal lamp, stop signal lamp, fog lamp, DRL, tail lamp, High Mounted Stop Lamp do not work and the fuses are OK, check the fuse panel in the engine compartment. If a fuse is blown, it must be replaced.

✻ NOTICE

If the headlamp, fog lamp, turn signal lamp, or tail lamp malfunction even without any problem to the lamps, have the vehicle checked by an authorized Kia dealer.

⚠ **CAUTION - Fuse Panel Covers**

- ***Set all switches to ON before driving.***
- ***If the vehicle is going to be unused for over 1 month, set all switches to OFF to prevent the batteries from draining.***
- ***The contact points of the switches may wear out with excessive use. Please refrain from excessive use of the switches (except for long-term parking for over 1 month).***

Fuse switch

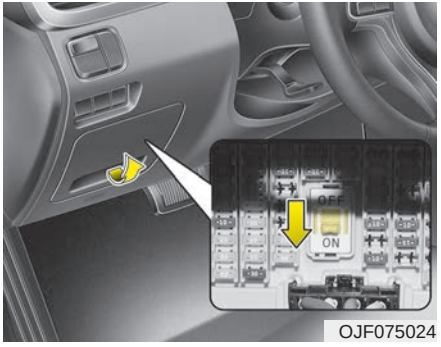

OJF075024

Always set the fuse switch to the ON position before using the vehicle.

If you move the switch to the OFF position, some items such as audio and the digital clock must be reset and transmitter (or smart key) may not work properly. When the switch is Off, the caution indicator will be displayed on the instrument cluster.

Always place the fuse switch in the ON position while driving the vehicle.

If the switch is located in the “OFF” position, a caution indicator will be displayed in the cluster.

Engine compartment fuse replacement

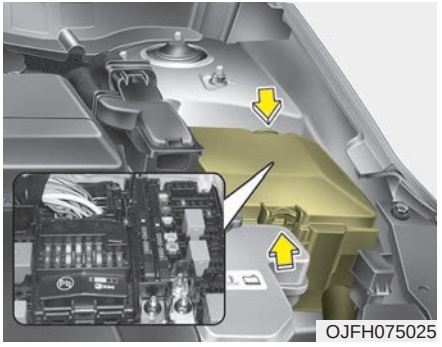
OJFH075025

1. Turn the engine start/stop button to the OFF position and all other switches off.
2. Remove the fuse panel cover by pressing the tab and pulling the cover up. When the blade type fuse is disconnected, remove it by using the clip designed for changing fuses located in the engine compartment fuse box. Upon removal, securely insert a reserve fuse of the same rating.

3. Check the removed fuse; replace it if it is blown. To remove or insert the fuse, use the fuse puller in the engine compartment fuse panel.
4. Push in a new fuse of the same rating, and make sure it fits tightly in the clips. If it fits loosely, consult an authorized Kia dealer.

⚠ CAUTION

After checking the fuse panel in the engine compartment, securely install the fuse panel cover to protect against any electrical failure which may occur from water contact. Listen for the audible clicking sound to ensure the fuse panel cover is securely fastened.

Multi fuse

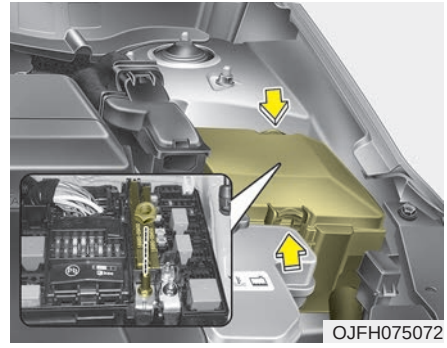
OJFH075072

If the multi fuse is blown, it must be removed as follows:

1. Turn off the engine.
2. Disconnect the negative battery cable.
3. Remove the nuts shown in the picture above.
4. Replace the fuse with a new one of the same rating.
5. Reverse these steps to reinstall the multi fuse.

✻ NOTICE

Do not disassemble nor assemble the multi fuse when it is secured with nuts and bolts. Incorrect or partial assembly torque may cause a fire. Have the vehicle checked by an authorized Kia dealer.

Main fuse

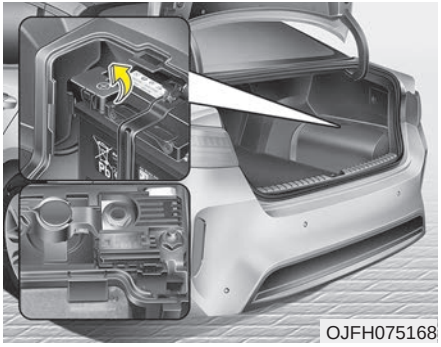

If the main fuse is blown, it must be removed as follows:

1. Turn off the engine.
2. Disconnect the negative battery cable.
3. Remove the nuts shown in the picture above.
4. Replace the fuse with a new one of the same rating.
5. Reverse these steps to reinstall the main fuse.

✻ NOTICE

The electronic system may not function correctly even when the engine compartment and internal fuse box's individual fuses are not disconnected. In such case the cause of the problem may be disconnection of the main fuse (BFT type), which is located inside the positive battery terminal (+) cap.
Since the main fuse is designed more intricately than other parts, have the vehicle checked by an authorized Kia dealer.

⚠ CAUTION

Visually inspect the battery cap to ensure it is securely closed. If the battery cap is not securely closed, moisture may enter the system and damage the electrical components.

✻ NOTICE - Random wiring prohibited when retrofitting equipment

Use of random wiring in the vehicle might cause danger due to failure and damage of the vehicle's performance.
Using random wires especially when retrofitting AVN or theft alarm system, remote engine control, car phone or radio, might damage the vehicle or cause fire.

✻ NOTICE - Remodeling Prohibited

Do not rewire your vehicle in any way as doing so may affect the performance of several safety features in your vehicle. Rewiring your vehicle may also void your warranty and cause you to be responsible for any subsequent vehicle damage which may result.

Fuse/relay panel description

Driver's side fuse panel

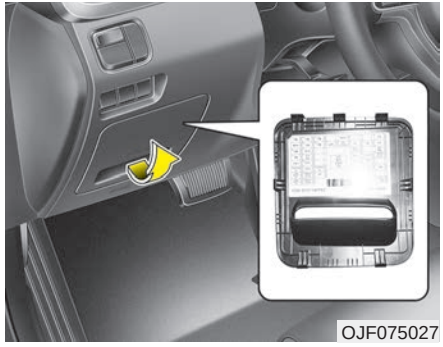
OJF075027

Inside the fuse/relay panel covers, you can find the fuse/relay label describing fuse/relay name and capacity.

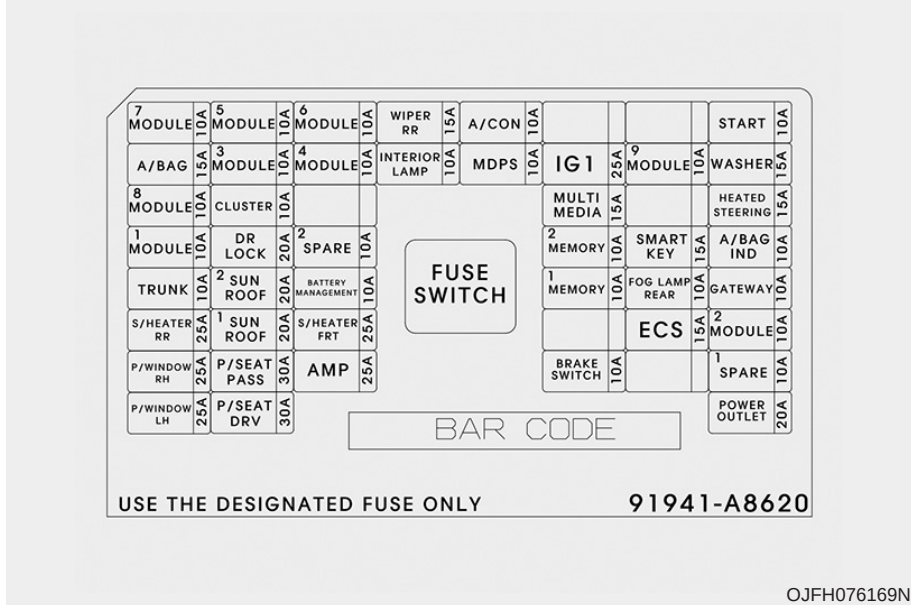

OJFH076169N

✻ NOTICE

Not all fuse panel descriptions in this manual may be applicable to your vehicle. It is accurate at the time of printing. When you inspect the fuse panel in your vehicle, refer to the fuse panel label on the inside of the fuse cover. This diagram will provide you with the specific information for your vehicles.

Instrument panel (Driver's side fuse panel)

Fuse Name	Fuse rating	Circuit Protected
MODULE 7	10A	Surround View Monitor Unit, Front Air Ventilation Seat Control Module, Front Seat Warmer Control Module, Rear Seat Warmer Control Module
MODULE 5	10A	A/C Control Module, Electro Chromic Mirror, Driver IMS Module, Head Lamp LH/RH, Auto Head Lamp Leveling Device Module, Fuel Lid & Trunk Open Switch, Shift Lever Indicator, Front Air Ventilation Seat Control Module, Front Seat Warmer Control Module, Rear Seat Warmer Control Module
MODULE 6	10A	BCM, Smart Key Control Module
A/CON	10A	A/C Control Module, E/R Junction Block (RLY. 4 - Blower Relay), Ionizer, Active Incar Sensor, Electronic A/C Compressor
START	10A	Transaxle Range Switch, Smart Key Control Module
A/BAG	15A	SRS Control Module, Passenger Occupant Detection Sensor
MODULE 3	10A	BCM, Stop Lamp Switch, AFLS Unit, Keyboard, VESS Unit, A/V & Navigation Head Unit, Sport Mode Switch
MODULE 4	10A	Console Switch, Blind-spot Collision Warning Radar LH/RH, Parking Assist Control Module, Smart Cruise Control Unit, Lane Keeping Assist Module, Active Air Flap Unit, Electric Parking Brake Module, BMS Control Module
INTERIOR LAMP	10A	Trunk Room Lamp, Driver/Passenger Door Lamp, Glove Box Lamp, Driver/Passenger Smart Key Outside Handle, Front Vanity Lamp Switch LH/RH, Overhead Console Lamp, Rear Personal Lamp LH/RH, Driver/Passenger Foot Lamp, Room Lamp, Center Personal Lamp

Fuse Name	Fuse rating	Circuit Protected
MDPS	10A	MDPS Unit (Column/Rack)
IG1	25A	PCB Block (Fuse - OPCU2/ELECTRICAL WATER PUMP/TCU2/ACTIVE HYDRAULIC BOOTER 3/HEV ECU2/ECU3)
MODULE 9	10A	Smart Key Control Module
WASHER	15A	Multifunction Switch (Wiper Low & Washer Switch)
MODULE 8	10A	Driver/Passenger Door Module
CLUSTER	10A	Instrument Cluster
MULTI MEDIA	15A	Audio, A/V & Navigation Head Unit, Keyboard
HTD STRG	15A	BCM (Steering Wheel Heated)
MODULE 1	10A	Console Switch, Active Air Flap Unit, Gateway, Driver/Passenger Door Module
DR LOCK	20A	Door Lock Relay, Door Unlock Relay, ICM Relay Box (Dead Lock Relay)
MEMORY 2	10A	Siren Control Module, Ultrasonic Instrusion Protection Sensor
SMART KEY	15A	Smart Key Control Module

Fuse Name	Fuse rating	Circuit Protected
A/BAG IND	10A	Instrument Cluster (Air Bag IND. Power)
TRUNK	10A	Trunk Lid Relay, Fuel Filler & Trunk Open Switch, ICM Relay Box (Fuel Filler Open Relay)
SUNROOF 2	20A	Sunroof Control Unit (Roller)
BATTERY MANAGEMENT	10A	BMS Control Module
MEMORY 1	10A	Instrument Cluster, A/C Control Module, Data Link Connector, BCM, Wireless Charger, Driver IMS Module, Rain Sensor, ICM Relay Box (Outside Mirror Folding/Unfolding Mirror Relay), Security Indicator, Auto Light & Photo Sensor, Driver/Passenger Door Module
FOG LAMP REAR	10A	ICM Relay Box (Rear Fog Lamp Relay)
GATEWAY	10A	Gateway
S/HEATER REAR	25A	Rear Seat Warmer Control Module
SUNROOF 1	20A	Sunroof Control Unit (Glass)
S/HEATER FRONT	25A	Front Air Ventilation Seat Control Module, Front Seat Warmer Control Module
ECS	15A	Not Used
MODULE 2	10A	Audio, A/V & Navigation Head Unit, Keyboard, Wireless Charger, Surround View Monitor Unit, AMP, Power Outside Mirror Switch, Smart Key Control Module, BCM, Rear USB Charger, VESS Unit, E/R Junction Block (RLY. 7 - Power Outlet Relay)

Fuse Name	Fuse rating	Circuit Protected
P/WDW RH	25A	Power Window RH Relay, Rear Safety Power Window Module LH, Rear Power Window Switch LH, Power Window Main Switch, [LHD] Passenger Safety Power Window Module [RHD] Driver Safety Power Window Module
P/SEAT PASS	30A	Passenger Seat Manual Switch, Walk In Relay Module, Passenger Reclining Limit Switch
AMP	25A	AMP
BRAKE SWITCH	10A	Stop Lamp Switch, Smart Key Control Module, Start/Stop Button Switch
P/WDW LH	25A	Power Window LH Relay, Rear Safety Power Window Module RH, Rear Power Window Switch RH, Power Window Main Switch, [LHD] Driver Safety Power Window Module [RHD] Passenger Safety Power Window Module
P/SEAT DRV	30A	Driver Seat Manual Switch, Driver IMS Module
POWER OUTLET	20A	Front Power Outlet #1, Front Cigarette Lighter & Power Outlet #2
RR WIPER	15A	-
SPARE 1	10A	-
SPARE 2	10A	-

Engine compartment fuse panel (For Hybrid)

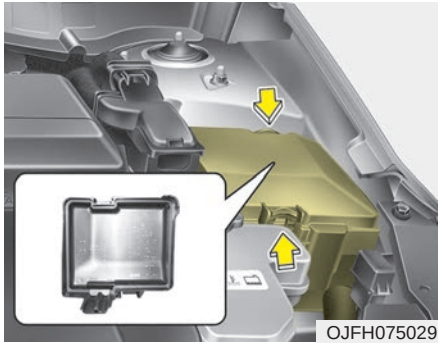
OJFH075029

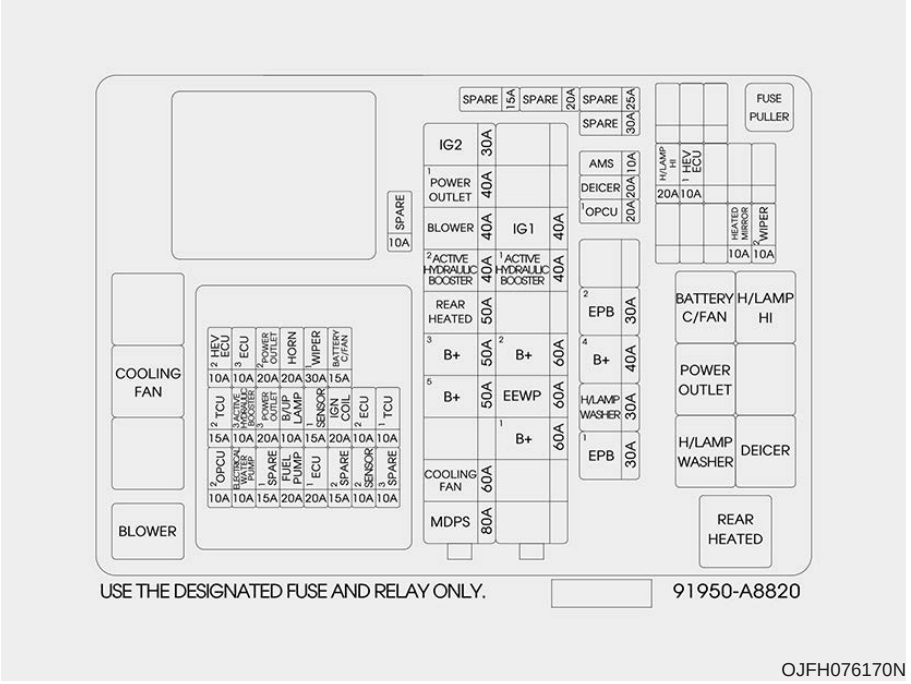

OJFH076170N

Engine compartment fuse panel (For Plug-in Hybrid)

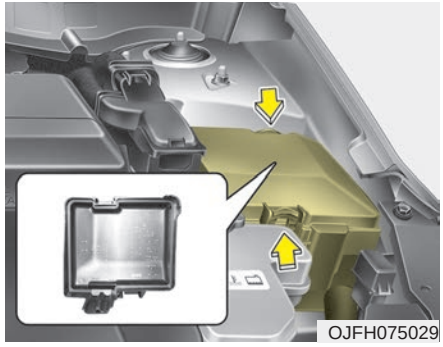

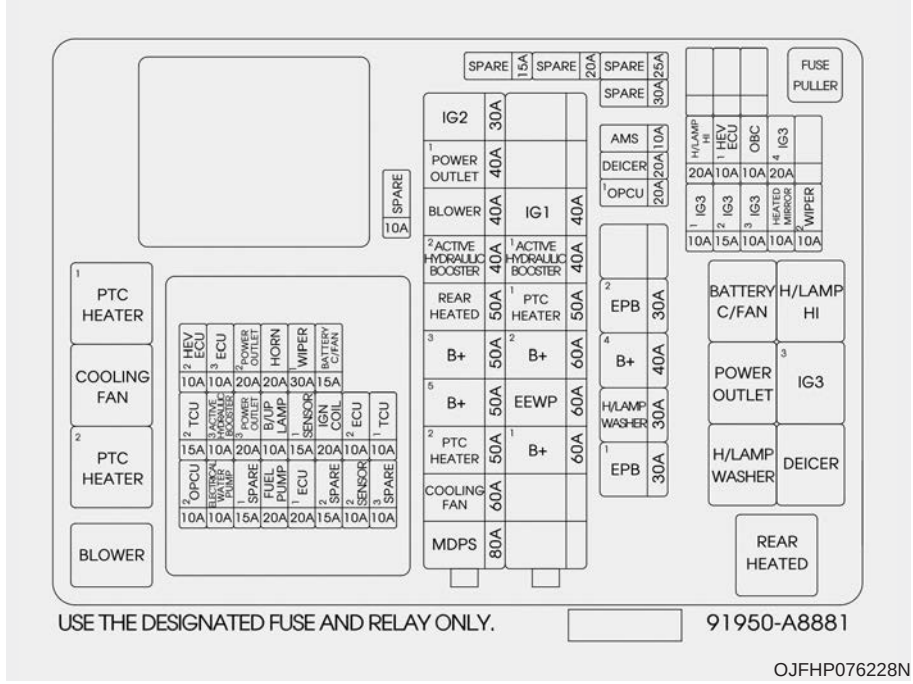

OJFHP076228N

Engine room compartment fuse panel

Fuse Name		Fuse rating	Circuit Protected
MULTI FUSE	MDPS 1	80A	MDPS Unit (Column)
	COOLING FAN	60A	RLY. 2 (Cooling Fan Relay)
	B+5	50A	PCB Block (Engine Control Relay, Fuse -FUEL PUMP/ECU2/TCU1/HORN/WIPER1/BATTERY C/FAN)
	B+3	50A	Smart Junction Block (IPS 2 (IPS 5), IPS 3 (IPS 6), IPS 7, IPS 8)
	REAR HEATED	50A	RLY. 11 (Rear Heated Relay)
	ACTIVE HYDRAULIC BOOSTER 2	40A	Integrated Brake Actuation Unit
	BLOWER	40A	RLY. 4 (Blower Relay)
	POWER OUTLET1	40A	RLY. 7 (Power Outlet Relay)
	IG2	30A	PCB Block (IG2 Relay)

Fuse Name		Fuse rating	Circuit Protected
MULTI FUSE	B+1	60A	Smart Junction Block (Fuse - TRUNK, SUNROOF2, S/HEATER REAR, SUNROOF1, P/WDW RH, P/SEAT PASS, P/WDW LH, P/SEAT DRV)
	EEWP	60A	Engine Electric Water Pump
	B+2	60A	Smart Junction Block (IPS 1, IPS 4, Fuse - FOG LAMP REAR, S/HEATER FRONT, AMP)
	ACTIVE HYDRAULIC BOOSTER 1	40A	Integrated Brake Actuation Unit
	IG1	40A	PCB Block (IG1/ACC Relay)
	PTC HEATER 1	50A	PTC HEATER

Fuse Name		Fuse rating	Circuit Protected
FUSE	EPB1	30A	Electric Parking Brake Module
	H/Lamp Washer	30A	RLY. 9 (H/Lamp Washer Relay)
	B+4	40A	Smart Junction Block (Leak Current Autocut Device Fuse - INTERIOR LAMP, MULTI MEDIA, MEMORY2, MEMORY1, Fuse - MODULE1, DR LOCK, SMART KEY, BRAKE SWITCH)
	EPB 2	30A	Electric Parking Brake Module
	OPCU 1	20A	Electric Oil Pump Unit
	DEICER	20A	RLY. 10 (Deicer Relay)
	AMS	10A	Battery Sensor
	HEATED MIRROR	10A	A/C Control Module, Driver/Passenger Power Outside Mirror
	WIPER 2	10A	BCM, PCM
	H/LAMP HI	20A	RLY. 6 (Head Lamp High Relay)
	HEV ECU 1	10A	HPCU
	OPCU2	10A	Electric Oil Pump Unit
	ELECTRICAL WATER PUMP	10A	Electric Water Pump (HEV)

Fuse Name		Fuse rating	Circuit Protected
FUSE	FUEL PUMP	20A	Fuel Pump Relay
	ECU 1	20A	PCM
	SENSORS 2	10A	Mass Air Flow Sensor, Fuel Pump Relay, Oil Control Valve #1/#2, Canister Close Valve, Camshaft Position Sensor #1/#2, Purge Control Solenoid Valve
	TCU 2	15A	Transaxle Range Switch
	ACTIVE HYDRAULIC BOOTER 3	10A	Multipurpose Check Connector, Integrated Brake Actuation Unit
	POWER OUTLET 3	20A	Rear Power Outlet
	B/UP LAMP	10A	PCM, Transaxle Range Switch, Electro Chromic Mirror, Rear Combination Lamp (IN) LH/RH
	OBC	10A	HEV OBC SIG, INLET
	IG3 4	20A	IG3 1 RLY
	IG3 1	10A	HEV WATER PUMP
	IG3 2	15A	HEV OBC SIG
	IG3 3	10A	PCU, HPCU, POSITION SW, CLUSTER, BMS EXTN, AVN, IGPM, CHARGER IND

Fuse Name		Fuse rating	Circuit Protected
FUSE	SENSOR 1	15A	Oxygen Sensor (Up/Down), E/R Junction Block (Cooling Fan Relay)
	IGN COIL	20A	Ignition Coil #1/#2/#3/#4
	ECU 2	10A	PCM
	TCU 1	10A	PCM
	HEV ECU 2	10A	HPCU, E/R Junction Block (Battery C/Fan Relay)
	ECU 3	10A	PCM
	POWER OUT-LET2	20A	Front Power Outlet #1
	HORN	20A	Horn Relay, ICM Relay Box (Burglar Alarm Horn Relay)
	WIPER 1	30A	Wiper Power Relay
	BATTERY C/FAN	15A	E/R Junction Block (Battery C/Fan Relay)

Relay

Relay Name	Type
COOLING FAN Relay	MINI
BLOWER Relay	MICRO
BATTERY C/FAN Relay	MICRO
H/LAMP HI Relay	MICRO
POWER OUTLET Relay	MICRO
H/LAMP WASHER Rela	MICRO
DEICER Relay	MICRO
REAR HEATED Relay	MINI
PTC HEATER 1	MINI
PTC HEATER 2	MINI
IG3 3	MICRO

Battery terminal cover

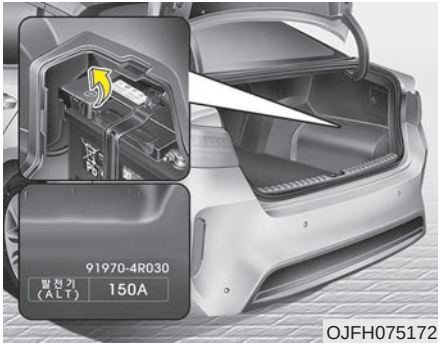

OJFH075172

✻ NOTICE

Not all fuse panel descriptions in this manual may be applicable to your vehicle. It is accurate at the time of printing. When you inspect the fuse panel in your vehicle, refer to the fuse panel label on the inside of the fuse cover. This diagram will provide you with the specific information for your vehicles.

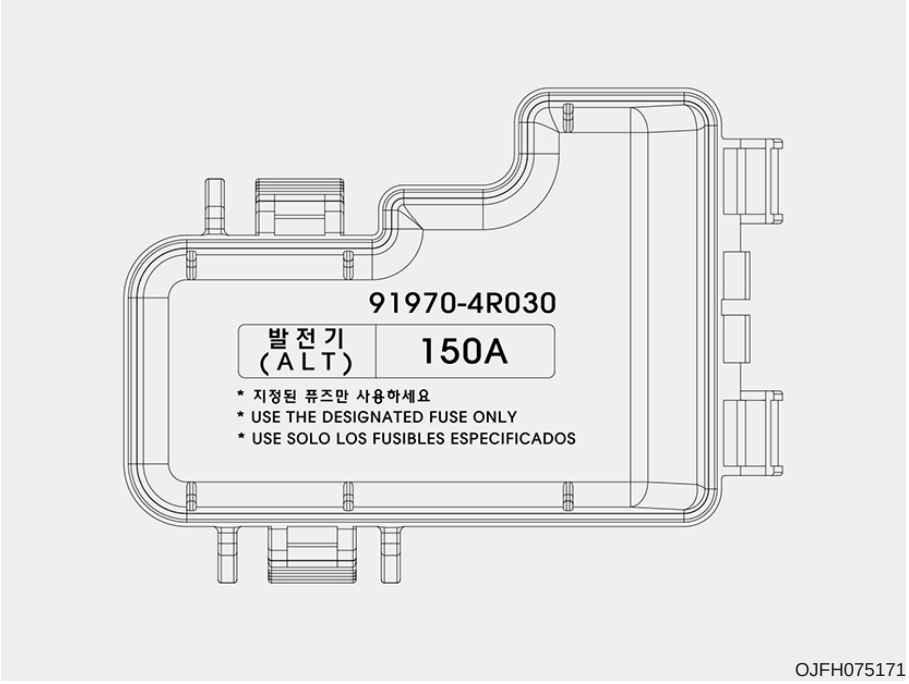

OJFH075171

LIGHT BULBS

Bulb replacement precaution

Please keep extra bulbs on hand with appropriate wattage ratings in case of emergencies.

Refer to “Bulb Wattage” in chapter 9.

When changing lamps, first turn off the engine at a safe place, firmly apply the parking brake and detach the battery’s negative (-) terminal.

⚠ WARNING - Working on the lights

Prior to working on the lights, firmly apply the parking brake, ensure that the engine start/stop button is in OFF position and turn off the lights to avoid sudden movement of the vehicle that may cause burning your fingers or receiving an electric shock.

Use only bulbs of the specified wattage.

⚠ CAUTION - Light replacement

Be sure to replace the burned-out bulb with one of the same wattage rating. Otherwise, it may cause damage to the fuse or electric wiring system.

⚠ CAUTION - Headlamp Lens

To prevent damage, do not clean the headlamp lens with chemical solvents or strong detergents.

✻ NOTICE

- **If the light bulb or lamp connector is removed while the lamp is still on, the fuse box's electronic system may log it as a malfunction. Therefore, a lamp malfunction incident may be recorded as a Diagnostic Trouble Code (DTC) in the fuse box.**
- **It is normal for an operating lamp to flicker momentarily. This is due to a stabilization function of the vehicle’s electronic control device. If the lamp lights up normally after momentarily blinking, then it is functioning as normal. However, if the lamp continues to flicker several times or turns off completely, there may be an error in the vehicle’s electronic control device. Please have the vehicle checked by an authorized Kia dealer immediately.**

If you don't have the necessary tools, the correct bulbs and the expertise, consult an authorized Kia dealer. In many cases, it is difficult to replace vehicle light bulbs because other parts of the vehicle must be removed before you can get to the bulb. This is especially true if you have to remove the headlamp assembly to get to the bulb(s).

Removing/installing the headlamp assembly can result in damage to the vehicle.

If non-genuine parts or substandard bulbs are used, it may lead to blowing a fuse or other wiring damages.

Do not install extra lamps or LEDs to the vehicle. If additional lights are installed, it may lead to lamp malfunctions and flickering. Additionally, the fuse box and other writing may be damaged.

Light bulb position (Front)

■ Type A

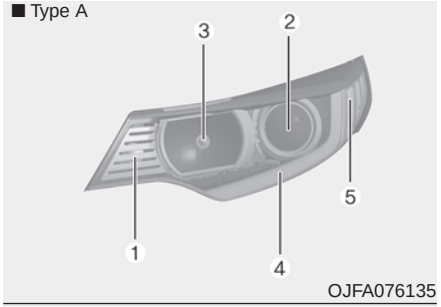

OJFA076135

■ Type B

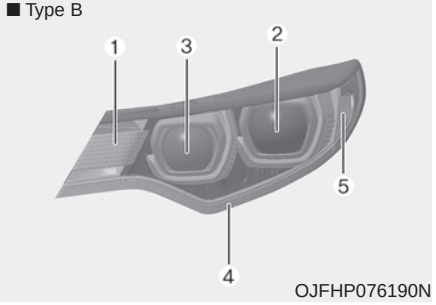

OJFHP076190N

(1) Front turn signal lamp
(2) Headlamp (Low)
(3) Headlamp (High)/Day time running lamp
(4) Day time running lamp/Position lamp (LED type)
(5) Side marker

Light bulb position (Rear)

■ Rear combination lamp

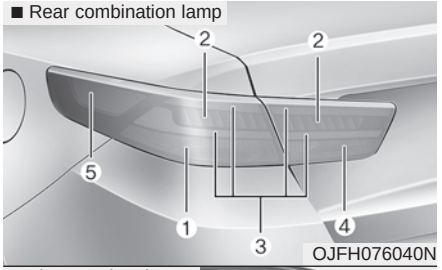

OJFH076040N

■ License plate lamp

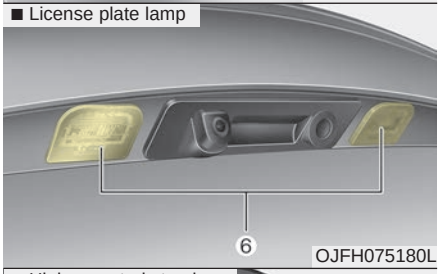

OJFH075180L

■ High mounted stop lamp

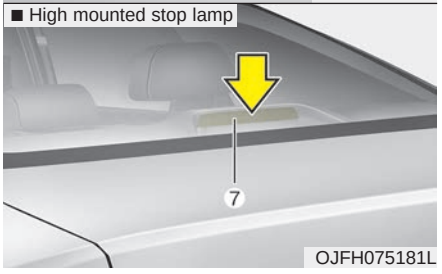

OJFH075181L

(1) Rear turn signal lamp
(2) Stop lamp (LED type)
(3) Tail lamp (LED type)
(4) Back-up lamp
(5) Side marker
(6) License plate lamp
(7) High mounted stop lamp (LED type)

Light bulb position (Side)

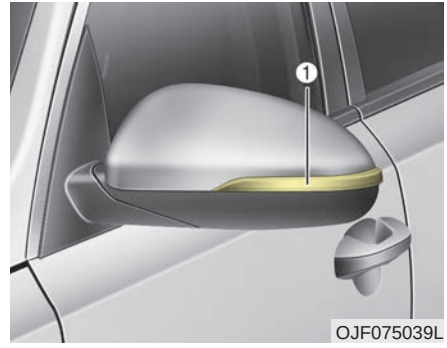

(1) Side repeater lamp (LED type)

Headlamp (Low beam) bulb replacement (Headlamp Type A)

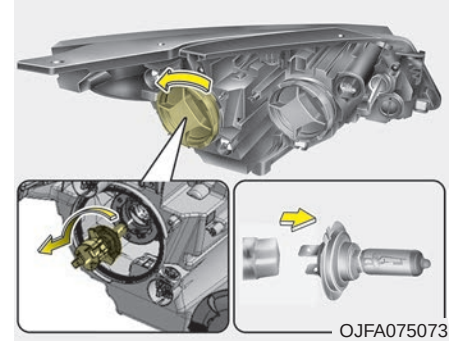

1. Open the hood.
2. Remove the headlamp bulb cover by turning it counterclockwise.
3. Remove the bulb-socket from the headlamp assembly by turning the bulb-socket counterclockwise until the tabs on the bulb-socket align with the slots on the headlamp assembly.
4. Remove the bulb from bulb-socket by pulling it out.

5. Insert a new bulb by inserting it into the bulb-socket.
6. Install the bulb-socket in the headlamp assembly by aligning the tabs on the bulb-socket with the slots in the headlamp assembly. Push the bulb-socket into the headlamp assembly and turn the bulb-socket clockwise.
7. Install the headlamp bulb cover by turning it clockwise.

Headlamp bulb

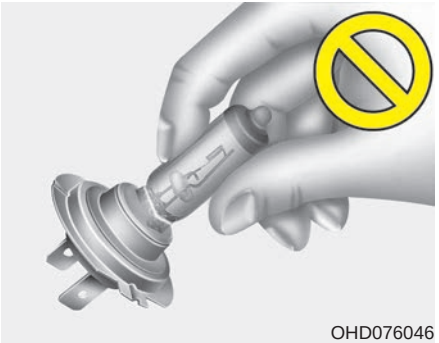

⚠ WARNING - Halogen bulbs

Handle halogen bulbs with care.

- **Halogen bulbs contain pressurized gas that will produce flying pieces of glass if broken.**
- **Avoid scratches and abrasions to the halogen bulbs. If the bulbs are lit, avoid contact with liquids.**
- Never touch the glass with bare hands. Residual oil may cause the bulb to overheat and burst when lit. A bulb should be operated only when installed in a headlamp.
- If a bulb becomes damaged or cracked, replace it immediately and carefully dispose of it.
- Wear eye protection when changing a bulb. Allow the bulb to cool down before handling it.

Headlamp (High beam) bulb replacement (Headlamp Type A)

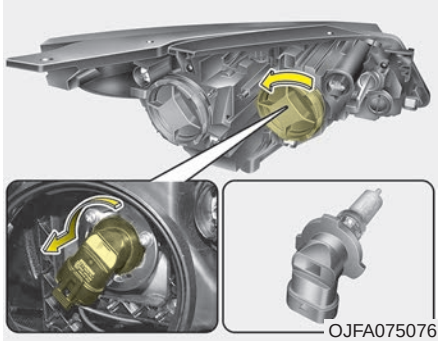

1. Open the hood.
2. Remove the headlamp bulb cover by turning it counterclockwise.
3. Disconnect the headlamp bulb socket-connector.
4. Remove the bulb-socket from the headlamp assembly by turning the bulb-socket counterclockwise until the tabs on the bulb-socket align with the slots on the headlamp assembly.
5. Install a new bulb-socket assembly in the headlamp assembly by aligning the tabs on the bulb-socket with the slots in the headlamp assembly. Push the bulb-socket into the headlamp assembly and turn the bulb-socket clockwise.
6. Install the headlamp bulb cover by turning it clockwise.

Headlamp bulb

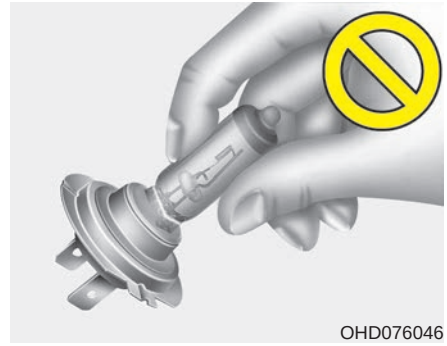

⚠ WARNING - Halogen bulbs

Handle halogen bulbs with care.

- **Halogen bulbs contain pressurized gas that will produce flying pieces of glass if broken.**
- **Avoid scratches and abrasions to the halogen bulbs. If the bulbs are lit, avoid contact with liquids.**

- Never touch the glass with bare hands. Residual oil may cause the bulb to overheat and burst when lit. A bulb should be operated only when installed in a headlamp.
- If a bulb becomes damaged or cracked, replace it immediately and carefully dispose of it.
- Wear eye protection when changing a bulb. Allow the bulb to cool down before handling it.

Headlamp (Low/High beam,LED type) bulb replacement (Headlamp Type B)

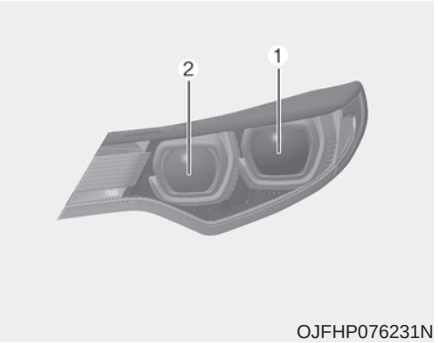

OJFHP076231N

If the head lamp (LED) (1,2) does not operate, have the vehicle checked by an authorized Kia dealer.

The LED lamps cannot be replaced as a single component because they are part of an integrated unit. The LED lamps have to be replaced with the unit.

A skilled technician should check or repair the head lamp (LED), to avoid damage to related parts of the vehicle.

Front turn signal lamp bulb replacement

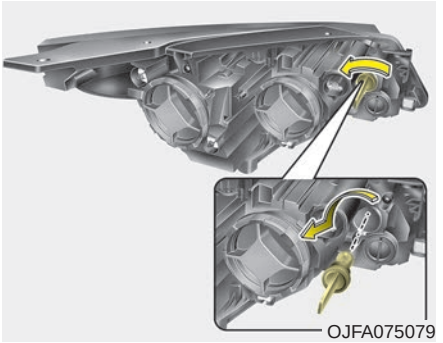
OJFA075079

1. Open the hood.
2. Remove the bulb-socket from the headlamp assembly by turning the bulb-socket counterclockwise until the tabs on the bulb-socket align with the slots on the headlamp assembly.
3. Remove the bulb from the bulb-socket by pressing it in and rotating it counterclockwise until the tabs on the bulb align with the slots in the bulb-socket. Pull the bulb out of the bulb-socket

4. Insert a new bulb by inserting it into the bulb-socket and rotating it until it locks into place.
5. Install the socket in the headlamp assembly by aligning the tabs on the bulb-socket with the slots in the assembly. Push the bulb-socket into the headlamp assembly and turn the socket clockwise.

Position lamp + DRL (LED type) bulb replacement

■ Type A

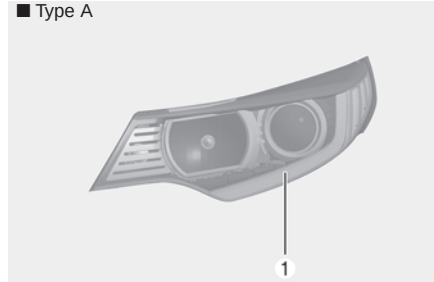

OJFH075175

■ Type B

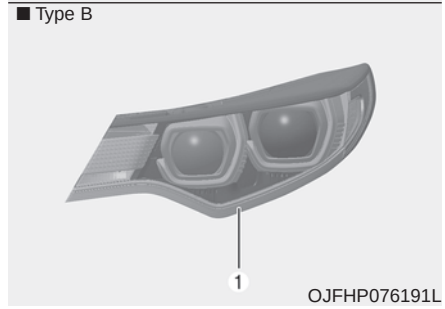

OJFHP076191L

If the position lamp + DRL (1) does not operate, have the vehicle checked by an authorized Kia dealer.

The LED lamps cannot be replaced as a single component because they are part of an integrated unit. The LED lamps have to be replaced with the unit.
A skilled technician should check or repair the position lamp + DRL (1), to avoid damage to related parts of the vehicle.

Side repeater lamp bulb replacement

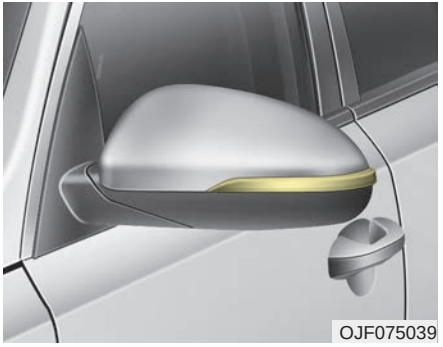
OJF075039

If the side repeater lamp does not operate, have the vehicle checked by an authorized Kia dealer.

The LED lamps cannot be replaced as a single component because they are part of an integrated unit. The LED lamps have to be replaced with the unit.

A skilled technician should check or repair the side repeater lamp, for it may damage related parts of the vehicle.

Rear turn signal lamp bulb replacement

OJF075041

1. Open the trunk lid.
2. Open the service cover.

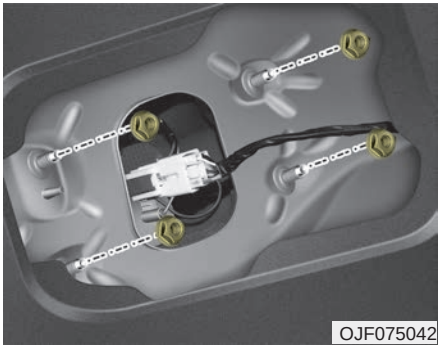
OJF075042

3. Remove the nuts from the vehicle.
4. Disconnect the rear combination lamp connector.

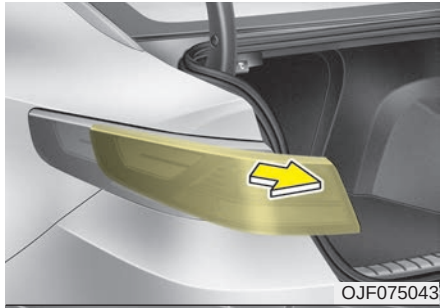

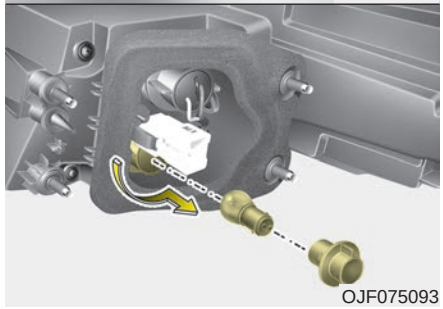

5. Remove the rear combination lamp assembly from the body of the vehicle.
6. Remove the socket from the assembly by turning the socket counterclockwise until the tabs on the socket align with the slots on the assembly.
7. Remove the bulb from the socket by pressing it in and rotating it counterclockwise until the tabs on the bulb align with the slots in the socket. Pull the bulb out of the socket.
8. Insert a new bulb by inserting it into the socket and rotating it until it locks into place.
9. Install the socket in the assembly by aligning the tabs on the socket with the slots in the assembly. Push the socket into the assembly and turn the socket clockwise.
10. Install the rear combination lamp assembly to the body of the vehicle.
11. Install the service cover by putting it into the service hole.

Stop and tail lamp (LED type) bulb replacement

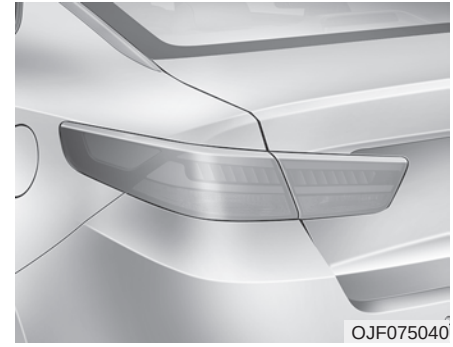

If the stop and tail lamp (LED) does not operate, have the vehicle checked by an authorized Kia dealer.

The LED lamps cannot be replaced as a single component because they are part of an integrated unit. The LED lamps have to be replaced with the unit.

A skilled technician should check or repair the stop and tail lamp (LED), to avoid damage to related parts of the vehicle.

Back-up lamp bulb replacement

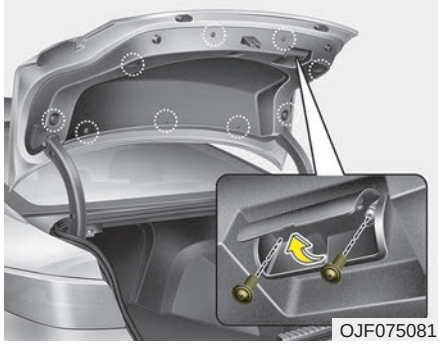
OJF075081

1. Open the trunk lid.
2. Loosen the retaining screw of the trunk lid cover and then remove the cover.

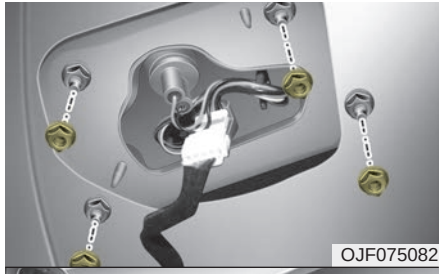
OJF075082

OJF075083

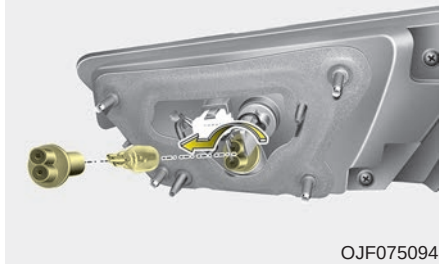
OJF075094

3. Remove the nuts from the vehicle.
4. Disconnect the rear combination lamp (inside) connector.
5. Remove the rear combination lamp (inside) assembly from the body of the vehicle.
6. Remove the socket from the assembly by turning the socket counterclockwise until the tabs on the socket align with the slots on the assembly.
7. Remove the bulb from bulb-socket by pulling it out.
8. Insert a new bulb by inserting it into the bulb-socket.
9. Install the socket in the assembly by aligning the tabs on the socket with the slots in the assembly. Push the socket into the assembly and turn the socket clockwise.
10. Install the rear combination lamp (inside) assembly to the body of the vehicle.
11. Install the trunk lid cover.

License plate lamp bulb replacement

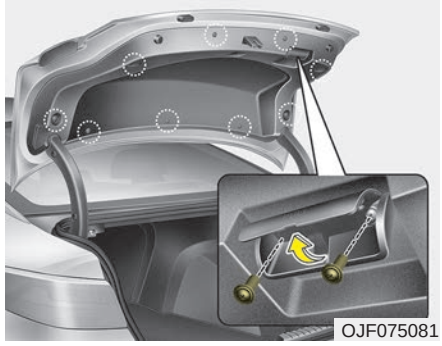
OJF075081

1. Open the trunk lid.
2. Loosen the retaining screw of the trunk lid cover and then remove the cover.

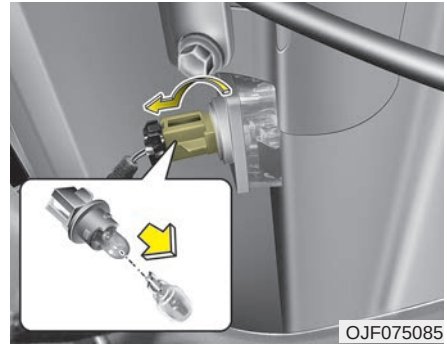
OJF075085

3. Remove the socket from the assembly by turning the socket counterclockwise until the tabs on the socket align with the slots on the assembly.
4. Remove the bulb from bulb-socket by pulling it out.
5. Insert a new bulb by inserting it into the bulb-socket.
6. Install the socket in the assembly by aligning the tabs on the socket with the slots in the assembly. Push the socket into the assembly and turn the socket clockwise.
7. Install the trunk lid cover.

High mounted stop lamp bulb replacement

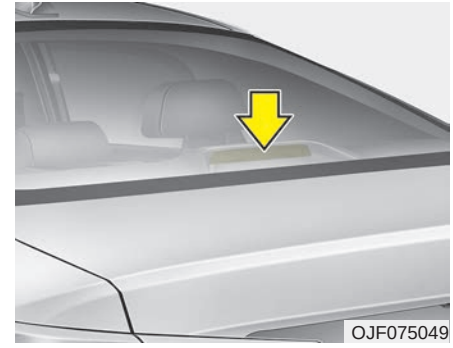
OJF075049

If the high mounted stop lamp (LED) does not operate, have the vehicle checked by an authorized Kia dealer.

The LED lamps cannot be replaced as a single component because they are part of an integrated unit. The LED lamps have to be replaced with the unit.

A skilled technician should check or repair the high mounted stop lamp (LED), to avoid damage to related parts of the vehicle.

Map lamp bulb replacement

OJF075050

If the map lamp (bulb and LED type) does not operate, have the vehicle checked by an authorized Kia dealer.

The LED lamps cannot be replaced as a single component because they are part of an integrated unit. The LED lamps have to be replaced with the unit.

A skilled technician should check or repair the map lamp (bulb and LED type), to avoid damage to related parts of the vehicle.

Vanity mirror lamp bulb replacement

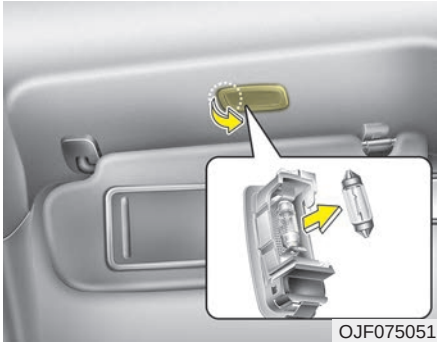
OJF075051

⚠ WARNING - Interior lamps

Prior to working on the Interior lamps, ensure that the "OFF" button is depressed to avoid burning your fingers or receiving an electric shock.

1. Using a flat-blade screwdriver, gently pry the lamp assembly from interior.
2. Remove the bulb by pulling it straight out.
3. Install a new bulb in the socket.
4. Install the lamp assembly to interior.

✻ NOTICE

Be careful not to dirty or damage the lens, lens tab, and plastic housings.

Room lamp bulb replacement

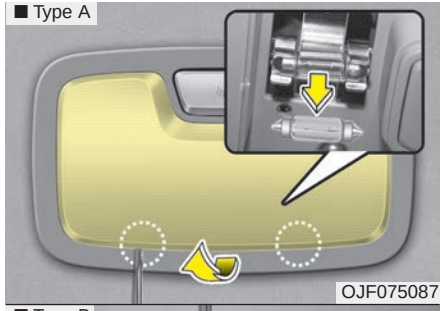

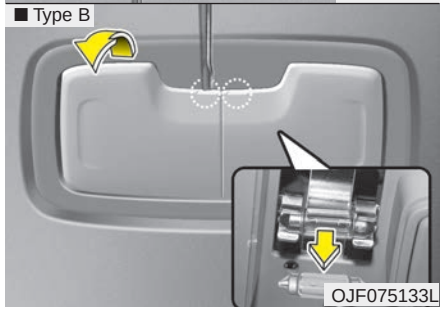

⚠ WARNING - Interior lamps

Prior to working on the Interior lamps, ensure that the "OFF" button is depressed to avoid burning your fingers or receiving an electric shock.

1. Using a flat-blade screwdriver, gently pry the lens cover from lamp housing.
2. Remove the bulb by pulling it straight out.
3. Install a new bulb in the socket.
4. Align the lens cover tabs with the lamp housing notches and snap the lens into place.

✻ NOTICE

Be careful not to dirty or damage the lens, lens tab, and plastic housings.

Personal lamp bulb replacement

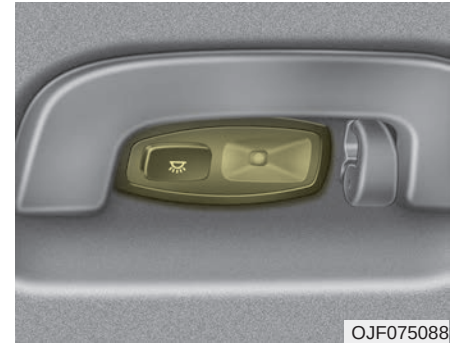

If the personal lamp (LED) does not operate, have the vehicle checked by an authorized Kia dealer.

The LED lamps cannot be replaced as a single component because they are part of an integrated unit. The LED lamps have to be replaced with the unit.

A skilled technician should check or repair the personal lamp (LED type), to avoid damage to related parts of the vehicle.

Glove box lamp bulb replacement

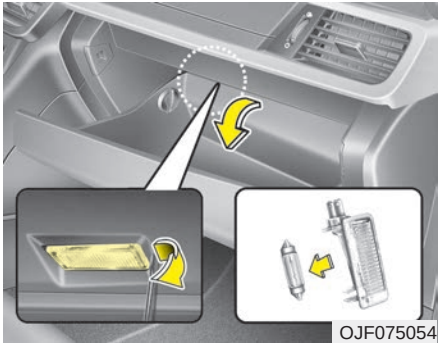

1. Using a flat-blade screwdriver, gently pry the lamp assembly from interior.
2. Remove the bulb by pulling it straight out.
3. Install a new bulb in the socket.
4. Install the lamp assembly to interior.

✻ NOTICE

Be careful not to dirty or damage the lens, lens tab, and plastic housings.

Trunk lamp bulb replacement

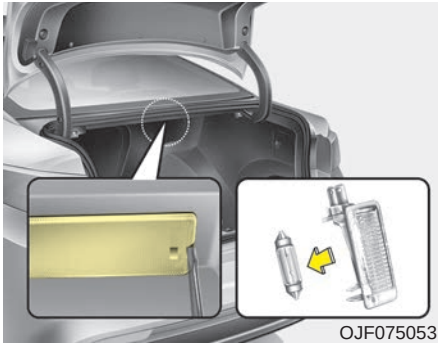

If the trunk lamp (LED) (1) does not operate, have the vehicle checked by an authorized Kia dealer.

The LED lamps cannot be replaced as a single component because they are part of an integrated unit. The LED lamps have to be replaced with the unit.

A skilled technician should check or repair the trunk lamp (LED), for it may damage related parts of the vehicle.

APPEARANCE CARE

Exterior care

Exterior general caution

It is very important to follow the label directions when using any chemical cleaner or polish. Read all warning and caution statements that appear on the label.

Finish maintenance

Washing

To help protect your vehicle's finish from rust and deterioration, wash it thoroughly and frequently at least once a month with lukewarm or cold water.

If you use your vehicle for off-road driving, you should wash it after each off-road trip. Pay special attention to the removal of any accumulation of salt, dirt, mud, and other foreign materials. Make sure the drain holes in the lower edges of the doors and rocker panels are kept clear and clean.

Insects, tar, tree sap, bird droppings, industrial pollution and similar deposits can damage your vehicle's finish if not removed immediately.

Even prompt washing with plain water may not completely remove all these deposits. A mild soap, safe for use on painted surfaces, may be used.

After washing, rinse the vehicle thoroughly with lukewarm or cold water. Do not allow soap to dry on the finish.

After washing the vehicle, test the brakes while driving slowly to see if they have been affected by water. If braking performance is impaired, dry the brakes by applying them lightly while maintaining a slow forward speed.

High-pressure washing

- When using high-pressure washers, make sure to maintain sufficient distance from the vehicle.

  Insufficient clearance or excessive pressure can lead to component damage or water penetration.
- Do not spray the camera, sensors or its surrounding area directly with a high pressure washer. Shock applied from high pressure water may cause the device to not operate normally.
- Do not bring the nozzle tip close to boots (rubber or plastic covers) or connectors as they may be damaged if they come into contact with high pressure water.

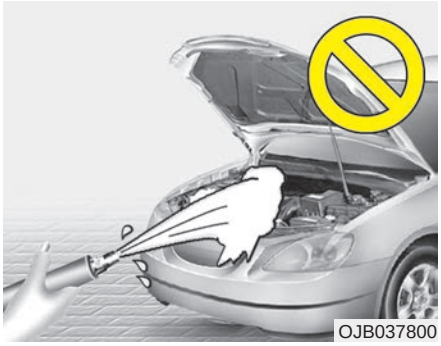
OJB037800

⚠ **CAUTION - Wet engine**

- ***Water washing in the engine compartment, including high pressure water washing, may cause the failure of electrical circuits located in the engine compartment.***
- ***Never allow water or other liquids to come in contact with electrical/electronic components inside the vehicle as this may damage them.***

Waxing

Wax the vehicle when water will no longer bead on the paint.

Always wash and dry the vehicle before waxing. Use a good quality liquid or paste wax, and follow the manufacturer's instructions. Wax all metal trim to protect it and to maintain its luster.

Removing oil, tar, and similar materials with a spot remover will usually strip the wax from the finish. Be sure to re-wax these areas even if the rest of the vehicle does not yet need waxing.

Do not apply wax on embossed unpainted unit, as it may tarnish the unit.

⚠ **CAUTION - Drying vehicle**

- ***Wiping dust or dirt off the body with a dry cloth will scratch the finish.***
- ***Do not use steel wool, abrasive cleaners, acid detergents or strong detergents containing high alkaline or caustic agents on chrome-plated or anodized aluminum parts. This may result in damage to the protective coating and cause discoloration or paint deterioration.***

Finish damage repair

Deep scratches or stone chips in the painted surface must be repaired promptly. Exposed metal will quickly rust and may develop into a major repair expense.

If your vehicle is damaged and requires any metal repair or replacement, be sure the body shop applies anti-corrosion materials to the parts repaired or replaced.

Bright-metal maintenance

- To remove road tar and insects, use a tar remover, not a scraper or other sharp object.
- To protect the surfaces of bright-metal parts from corrosion, apply a coating of wax or chrome preservative and rub to a high luster.
- During winter weather or in coastal areas, cover the bright metal parts with a heavier coating of wax or preservative. If necessary, coat the parts with non-corrosive petroleum jelly or other protective compound.

Underbody maintenance

Road salt and other corrosive chemicals are used in cold weather states to melt snow and prevent ice accumulation. If these chemicals are not regularly removed, they will corrode the vehicle underbody and over time damage fuel lines, the fuel tank retention system, the vehicle suspension, the exhaust system, and even the body frame. The National Highway Traffic Safety Administration has warned all vehicle owners of all brands of the need to take the following steps:

- Wash the undercarriage of your vehicle regularly during the winter and whenever your vehicle has been exposed to such salts or chemicals.
- Do a thorough washing of the undercarriage at the end of the winter.
- Use professional service technicians or governmental inspection stations to annually inspect for corrosion.
- Immediately seek an inspection of your vehicle if you become visually aware of corrosion flaking or scaling or if you become aware of a change in vehicle performance, such as soft or spongey brakes, fluids leaking, impairment of directional control, suspension noises or rattling metal straps.

Aluminum wheel maintenance

The aluminum wheels are coated with a clear protective finish.

- Do not use any abrasive cleaner, polishing compound, solvent, or wire brushes on aluminum wheels. They may scratch the finish.
- Clean the wheel when it has cooled.
- Use only a mild soap or neutral detergent, and rinse thoroughly with water. Also, be sure to clean the wheels after driving on salted roads. This helps prevent corrosion.

- Avoid washing the wheels with highspeed vehicle wash brushes.
- Do not use any alkaline or acid detergents It may damage and corrode the aluminum wheels coated with a clear protective finish.

⚠ WARNING

After washing the vehicle, test the brakes while driving slowly to see if they have been affected by water. If braking performance is impaired, dry the brakes by applying them lightly while maintaining a slow forward speed.

Corrosion protection

Protecting your vehicle from corrosion

By using advanced design and construction practices to combat corrosion, we produce vehicles of excellent quality. However, this is only part of the job. To achieve the long-term corrosion resistance your vehicle can deliver, the owner's cooperation and assistance is also required.

Common causes of corrosion

The most common causes of corrosion on your vehicle are:

- Road salt, dirt and moisture that is allowed to accumulate underneath the vehicle.
- Removal of paint or protective coatings by stones, gravel, abrasion or minor scrapes and dents which leave unprotected metal exposed to corrosion.

High-corrosion areas

If you live in an area where your vehicle is regularly exposed to corrosive materials, corrosion protection is particularly important. Some of the common causes of accelerated corrosion are road salts, dust control chemicals, ocean air and industrial pollution.

Moisture breeds corrosion

Moisture creates the conditions in which corrosion is most likely to occur. For example, corrosion is accelerated by high humidity, particularly when temperatures are just above freezing. In such conditions, the corrosive material is kept in contact with the vehicle’s surface by moisture that evaporates slowly.

Mud is particularly corrosive because it dries slowly and holds moisture in contact with the vehicle. Although the mud appears to be dry, it can still retain the moisture and promote corrosion.

High temperatures can also accelerate corrosion of parts that are not properly ventilated so the moisture can be dispersed. For all these reasons, it is particularly important to keep your vehicle clean and free of mud or accumulations of other materials. This applies not only to the visible surfaces but particularly to the underside of the vehicle.

To help prevent corrosion

You can help prevent corrosion from beginning by observing the following:

Keep your vehicle clean

The best way to prevent corrosion is to keep your vehicle clean and free of corrosive materials. Attention to the underside of the vehicle is particularly important.

- If you live in a high-corrosion area — where road salts are used, near the ocean, areas with industrial pollution, acid rain, etc.—, you should take extra care to prevent corrosion. In winter, hose off the underside of your vehicle at least once a month and be sure to clean the underside thoroughly when winter is over.
- When cleaning underneath the vehicle, give particular attention to the components under the fenders and other areas that are hidden from view. Do a thorough job; just dampening the accumulated mud rather than washing it away will accelerate corrosion rather than prevent it. Water under high pressure and steam are particularly effective in removing accumulated mud and corrosive materials.
- When cleaning lower door panels, rocker panels and frame members, be sure that drain holes are kept open so that moisture can escape and not be trapped inside to accelerate corrosion.

Keep your garage dry

Don't park your vehicle in a damp, poorly ventilated garage. This creates a favorable environment for corrosion. This is particularly true if you wash your vehicle in the garage or drive it into the garage when it is still wet or covered with snow, ice or mud. Even a heated garage can contribute to corrosion unless it is well ventilated so moisture is dispersed.

Keep paint and trim in good condition

Scratches or chips in the finish should be covered with "touch-up" paint as soon as possible to reduce the possibility of corrosion. If bare metal is showing through, the attention of a qualified body and paint shop is recommended.

Bird droppings : Bird droppings are highly corrosive and may damage painted surfaces in just a few hours. Always remove bird droppings as soon as possible.

Don't neglect the interior

Moisture can collect under the floor mats and carpeting and cause corrosion. Check under the mats periodically to be sure the carpeting is dry. Use particular care if you carry fertilizers, cleaning materials or chemicals in the vehicle.

These should be carried only in proper containers and any spills or leaks should be cleaned up, flushed with clean water and thoroughly dried.

Interior care

Interior general precautions

Prevent chemicals such as perfume, cosmetic oil, sun cream, hand cleaner, and air freshener from contacting the interior parts because they may cause damage or discoloration. If they do contact the interior parts, wipe them off immediately. If necessary, use a vinyl cleaner, see product instructions for correct usage.

⚠ CAUTION - Electrical components

Never allow water or other liquids to come in contact with electrical/electronic components inside the vehicle as this may damage them.

⚠ CAUTION - Leather

When cleaning leather products (steering wheel, seats etc.), use neutral detergents or low alcohol content solutions. If you use high alcohol content solutions or acid/alkaline detergents, the color of the leather may fade or the surface may get stripped off.

Taking care of leather seats

- Vacuum the seat periodically to remove dust and sand on the seat. It will prevent abrasion or damage of the leather and maintain its quality.
- Wipe the natural leather seat cover often with dry or soft cloth.
- Sufficient use of a leather protective may prevent abrasion of the cover and helps maintain the color.

  Be sure to read the instructions and consult a specialist when using leather coating or protective agents.
- Light colored (beige, cream beige) leather is easily contaminated and the stain is noticeable. Clean the seats frequently.
- Avoid wiping with wet cloth. It may cause the surface to crack.

Cleaning the leather seats

- Remove all contaminations instantly. Refer to instructions below for removal of each contaminant.
- Cosmetic products(sunscreen, foundation, etc.)
  - Apply cleansing cream on a cloth and wipe the contaminated point. Wipe off the cream with a wet cloth and remove water with a dry cloth.
- Beverages(coffee, soft drink, etc.)
  - Apply a small amount of neutral detergent and wipe until contaminations do not smear.
- Oil
  - Remove oil immediately with absorbable cloth and wipe with stain remover for natural leather only.
- Chewing gum
  - Harden the gum with ice and remove gradually.

Fabric seat cover using precautions (If equipped)

Please clean the fabric seats regularly with a vacuum cleaner in consideration of fabric material characteristics. If they are heavily soiled with beverage stains, etc., use a suitable interior cleaner. To prevent damage to seat covers, wipe off the seat covers down to the seams with a large wiping motion and moderate pressure using a soft sponge or microfiber cloth.

Velcro closures on clothing or sharp objects may cause snagging or scratches on the surface of the seats. Make sure not to rub such objects against the surface.

Cleaning the upholstery and interior trim

Vinyl

Remove dust and loose dirt from vinyl with a whisk broom or vacuum cleaner. Clean vinyl surfaces with a vinyl cleaner.

Fabric

Remove dust and loose dirt from fabric with a whisk broom or vacuum cleaner. Clean with a mild soap solution recommended for upholstery or carpets. Remove fresh spots immediately with a fabric spot cleaner. If fresh spots do not receive immediate attention, the fabric can be stained and its color can be affected. Also, its fire-resistant properties can be reduced if the material is not properly maintained.

Using anything but recommended cleaners and procedures may affect the fabric's appearance and fire-resistant properties.

Cleaning the lap/shoulder belt webbing

Clean the belt webbing with any mild soap solution recommended for cleaning upholstery or carpet. Follow the instructions provided with the soap. Do not bleach or re-dye the webbing because this may weaken it.

Cleaning the interior window glass

If the interior glass surfaces of the vehicle become fogged (that is, covered with an oily, greasy or waxy film), they should be cleaned with a glass cleaner. Follow the directions on the glass cleaner container.

⚠ **CAUTION - Rear window**

Do not scrape or scratch the inside of the rear window. This may result in damage of the rear window defroster grid.

Window tinting precaution

Window tint(especially metallic film) might cause communication disorder or poor radio reception, and malfunction of the automatic lighting system due to excessive change of illumination inside the vehicle. The solution used might also flow into electric, electronic devices causing disorder and failure.

EMISSION CONTROL SYSTEM

The emission control system of your vehicle is covered by a written limited warranty. Please see the warranty information contained in the Warranty & Consumer Information manual in your vehicle.

Your vehicle is equipped with an emission control system to meet all applicable emission regulations.

There are three emission control systems, as follows.

(1) Crankcase emission control system
(2) Evaporative emission control system
(3) Exhaust emission control system

In order to assure the proper function of the emission control systems, it is recommended that you have your vehicle inspected and maintained by an authorized Kia dealer in accordance with the maintenance schedule in this manual.

Caution for the Inspection and Maintenance Test (With Electronic Stability Control (ESC) system)

- **To prevent the vehicle from misfiring during dynamometer testing, turn the Electronic Stability Control (ESC) system off by pressing the ESC switch.**
- **After dynamometer testing is completed, turn the ESC system back on by pressing the ESC switch again.**

1. Crankcase emission control system

The positive crankcase ventilation system is employed to prevent air pollution caused by blow-by gases being emitted from the crankcase. This system supplies fresh filtered air to the crankcase through the air intake hose. Inside the crankcase, the fresh air mixes with blow-by gases, which then pass through the PCV valve into the induction system.

2. Evaporative emission control (including ORVR: Onboard Refueling Vapor Recovery) system

The Evaporative Emission Control System is designed to prevent fuel vapors from escaping into the atmosphere.

(The ORVR system is designed to allow the vapors from the fuel tank to be loaded into a canister while refueling at the gas station, preventing the escape of fuel vapors into the atmosphere.)

Canister

Fuel vapors generated inside the fuel tank are absorbed and stored in the onboard canister. When the engine is running, the fuel vapors absorbed in the canister are drawn into the surge tank through the purge control solenoid valve.

Purge Control Solenoid Valve (PCSV)

The purge control solenoid valve is controlled by the Engine Control Module (ECM); when the engine coolant temperature is low during idling, the PCSV closes so that evaporated fuel is not taken into the engine. After the engine warms up during ordinary driving, the PCSV opens to introduce evaporated fuel to the engine.

3. Exhaust emission control system

The Exhaust Emission Control System is a highly effective system which controls exhaust emissions while maintaining good vehicle performance.

Vehicle modifications

This vehicle should not be modified. Modification of your vehicle could affect its performance, safety or durability and may even violate governmental safety and emissions regulations.

In addition, damage or performance problems resulting from any modification may not be covered under warranty.

- If you use unauthorized electronic devices, it may cause the vehicle to operate abnormally, wire damage, battery discharge and fire. For your safety, do not use unauthorized electronic devices.

Engine exhaust gas precautions (carbon monoxide)

- Carbon monoxide can be present with other exhaust fumes. Therefore, if you smell exhaust fumes of any kind inside your vehicle, have it inspected and repaired immediately. If you ever suspect exhaust fumes are coming into your vehicle, drive it only with all the windows fully open. Have your vehicle checked and repaired immediately.

⚠ WARNING - Exhaust

Engine exhaust gases contain carbon monoxide (CO). Though colorless and odorless, it is dangerous and could be lethal if inhaled. Follow the instructions on this page to avoid CO poisoning.

- Do not operate the engine in confined or closed areas (such as garages) any more than what is necessary to move the vehicle in or out of the area.
- When the vehicle is stopped in an open area for more than a short time with the engine running, adjust the ventilation system (as needed) to draw outside air into the vehicle.
- Never sit in a parked or stopped vehicle for any extended time with the engine running.
- When the engine stalls or fails to start, excessive attempts to restart the engine may cause damage to the emission control system.

Operating precautions for catalytic converters (if equipped)

⚠ WARNING - Catalytic converter

Keep away from the catalytic converter and exhaust system while the vehicle is running or immediately thereafter. The exhaust and catalytic systems are very hot and may burn you.

⚠ WARNING - Fire

- **Do not park, idle or drive the vehicle over or near flammable objects, such as grass, vegetation, paper, leaves, etc. A hot exhaust system can ignite flammable items under your vehicle.**
- **Also, do not remove the heat sink around the exhaust system, do not seal the bottom of the vehicle or do not coat the vehicle for corrosion control. It may present a fire risk under certain conditions.**

Your vehicle is equipped with a catalytic converter emission control device.

Therefore, the following precautions must be observed:

- Use only UNLEADED FUEL for gasoline engines.
- Do not operate the vehicle when there are signs of engine malfunction, such as misfire or a noticeable loss of performance.
- Do not misuse or abuse the engine. Examples of misuse are coasting with the ignition off and descending steep grades in gear with the ignition off.
- Do not operate the engine at high idle speed for extended periods (5 minutes or more).
- Do not modify or tamper with any part of the engine or emission control system. All inspections and adjustments must be made by an authorized Kia dealer.
- Avoid driving with an extremely low fuel level. Running out of fuel could cause the engine to misfire, damaging the catalytic converter.

Failure to observe these precautions could result in damage to the catalytic converter and to your vehicle. Additionally, such actions could void your warranties.

Specifications & Consumer information

Dimensions 9-2
Engine 9-2
Bulb wattage 9-3
Tires and wheels 9-4
Gross vehicle weight 9-5
Luggage volume 9-5
Air conditioning system 9-5
Recommended lubricants and capacities 9-6
• Recommended SAE viscosity number 9-7
Vehicle identification number (VIN) 9-8
Vehicle certification label 9-8
Tire specification and pressure label 9-9
Engine number 9-9
Air conditioner compressor label 9-9

DIMENSIONS

Item			Unit : mm (in)
Overall length			4,855 (191.1)
Overall width			1,860 (73.2)
Overall height			1,460 (57.7)
Tread	Front	205/65 R16*	1,614 (63.5)
		215/55 R17	1,602 (63.1)
	Rear	205/65 R16*	1,621 (63.8)
		215/55 R17	1,609 (63.3)
Wheelbase			2,805 (110.4)

* : Only for Hybrid vehicle. Not for Plug-in hybrid vehicle

ENGINE

Item	Gasoline
	2.0 GDI HEV
Displacement [cc (cu. in)]	1,999 (121.99)
Bore x Stroke [mm (in.)]	81.0 X 97.0 (3.19 X 3.81)
Firing order	1-3-4-2
No. of cylinders	4. In-line

BULB WATTAGE

Light Bulb			Wattage (W)	Bulb type
Front	Headlamps (Low)		55W	H7SL
	Headlamps (Low) – LED type		25W	LED
	Headlamps (High)		65W	HB3 HYPER L/L(9005HL)
	Headlamps (High) – LED type		17W	LED
	Front turn signal lamps		28/8W	AMBER L/L
	Front position lamps		0.7W	LED
	Daytime running light	Bulb type	65W	HB3 HYPER L/L(9005HL)
		LED type	6.5W	LED
	Side Repeater lamps	LED type	0.5W	LED
Rear	Rear Stop/Tail lamps (outside)	LED type	12W	LED
	Rear tail lamps (Inside)		6W	LED
	Rear turn signal lamps		21W	PY21W
	Back-up lamps		16W	W16W
	High mounted stop lamp		3W	LED
	License plate lamps		5W	W5W
Interior	Map lamps	Bulb type	10W	FESTOON BULB
		LED type	1W	LED
	Room lamps		10W	FESTOON BULB
	Personal lamps		1W	LED
	Vanity mirror lamps		5W	FESTOON BULB
	Glove box lamp		5W	FESTOON BULB
	Trunk lamp		5W	LED

TIRES AND WHEELS

Item	Tire size	Wheel size	Load Capacity		Speed capacity		Inflation pressure [bar(psi, kPa)]				Wheel lug nut torque [Kgf·m (lbf·ft, N·m)]
							Normal load		Maximum load		
			LI *1	Kg	SS *2	Km/h	Front	Rear	Front	Rear	
Full size tire	205/65 R16 *4	6.5J × 16	95	690	H	210	2.4 (35, 240)	2.4 (35, 240)	2.4 (35, 240)	2.4 (35, 240)	11~13 (79~94, 107~127)
	215/55 R17	7.0J × 17	94	670	V	240	2.4 (35, 240)	2.4 (35, 240)	2.4 (35, 240)	2.4 (35, 240)	

*1 : Load Index
*2 : Speed Symbol
*3 : Normal load : Up to 3 persons
*4 : Only for Hybrid vehicle. Not for Plug-in hybrid vehicle

⚠ CAUTION

When replacing tires, use the same size originally supplied with the vehicle.
Using tires of a different size can damage the related parts or make them work irregularly.

✻ NOTICE

- **It is permissible to add 21 kPa (3 psi) to the standard tire pressure specification if colder temperatures are expected soon. Tires typically loose 7 kPa (1 psi) for every -11°C (12°F) temperature drop.**
  If extreme temperature variations are expected, re-check your tire pressure as necessary to keep them properly inflated.
- **We recommend that when replacing tires, use the same originally supplied with the vehicles. If not, that affects driving performance.**
- **When driving in high altitude grades, it is natural for the atmospheric pressure to decrease. Therefore, please check the tire pressure and add more air when necessary.**
  Additionally required tire air pressure per km above sea level: 10.5 kPa (1.5 psi)/km

GROSS VEHICLE WEIGHT

ITEM	Hybrid	Plug-in hybrid
GROSS VEHICLE WEIGHT	2,100 kg (4,630 lb)	2,200 kg (4,850 lb)

LUGGAGE VOLUME

ITEM	Hybrid	Plug-in hybrid
SAE	380L (13.4 cu ft)	280L (9.9 cu ft)

AIR CONDITIONING SYSTEM

ITEM	Weight of volume	Classification
Refrigerant	570 ± 25g	R-1234yf
Compressor lubricant	130 ± 10g	POE (RB100EV)

Have your vehicle inspected by an authorized Kia dealer.

RECOMMENDED LUBRICANTS AND CAPACITIES

To help achieve proper engine and powertrain performance and durability, use only lubricants of the proper quality. The correct lubricants also help promote engine efficiency that results in improved fuel economy.

These lubricants and fluids are recommended for use in your vehicle.

Lubricant		Volume	Classification
Engine oil *1 *2 (drain and refill) Recommends TOTAL QUARTZ		4.1 *l* (4.33 US qt.)	API SM or above*3, ILSAC GF-4 or above*4, ACEA-A5 or above
Automatic transaxle fluid		6.0 *l* (6.34 US qt.)	- ATF SP-IV (Recommended SK, MICHANG, NOCA)
Coolant		6.74 *l* (7.12 US qt.)	Mixture of antifreeze and water (Ethylene glycol base coolant for aluminum radiator)
Inverter coolant		3.13 *l* (3.30 US qt.)	Mixture of antifreeze and water (Ethylene glycol base coolant for aluminum radiator)
Brake		0.49 ± 0.02 L (0.52 ± 0.02 US qt.)	DOT 3 or DOT 4
Fuel	Hybrid	65 *l* (17.17 US gal.)	Refer to Fuel requirements in chapter 1.
	Plug-in hybrid	55 *l* (14.52 US gal.)	

*1 Refer to the recommended SAE viscosity numbers on the next page.

*2 Engine oils labeled Energy Conserving Oil are now available. Along with other additional benefits, they contribute to fuel economy by reducing the amount of fuel necessary to overcome engine friction. Often, these improvements are difficult to measure in everyday driving, but in a year's time, they can offer significant cost and energy savings.

*3 If the API SM engine oil is not available, you can use API SN or above.

*4 If the ILSAC GF-4 engine oil is not available, you can use ILSAC GF-5 or above.

Recommended SAE viscosity number

Engine oil viscosity (thickness) has an effect on fuel economy and cold weather operating (engine start and engine oil flowability). Lower viscosity engine oils can provide better fuel economy and cold weather performance; however, higher viscosity engine oils are required for satisfactory lubrication in hot weather. Using oils of any viscosity other than those recommended could result in engine damage. When choosing an oil, consider the range of temperature your vehicle will be operated in before the next oil change. Proceed to select the recommended oil viscosity from the chart.

Temperature Range for SAE Viscosity Numbers										
Temperature	°C	-30	-20	-10	0	10	20	30	40	50
	(°F)	-10		0	20	40	60	80	100	120
Engine Oil					10W-30					
		5W-20, 5W-30								

An engine oil displaying this API Certification Mark conforms to the international Lubricant Specification Advisory Commmittee (ILSAC). It is recommended to only use engine oils that uphold this API Certification Mark

VEHICLE IDENTIFICATION NUMBER (VIN)

■ Frame number

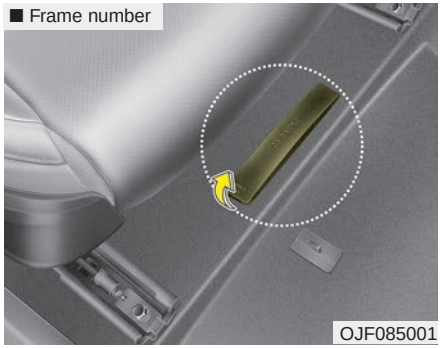

OJF085001

The vehicle identification number (VIN) is the number used in registering your vehicle and in all legal matters pertaining to its ownership, etc.

The number is punched on the floor under the passenger seat.

■ VIN label

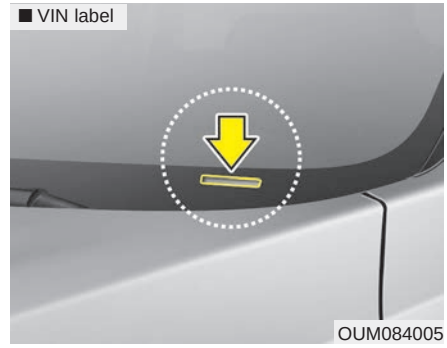

OUM084005

The VIN is also on a plate attached to the top of the dashboard. The number on the plate can easily be seen through the windshield from outside.

VEHICLE CERTIFICATION LABEL

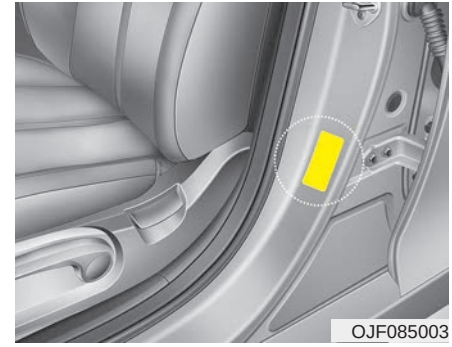

OJF085003

The vehicle certification label attached on the driver's side center pillar gives the vehicle identification number (VIN).

TIRE SPECIFICATION AND PRESSURE LABEL

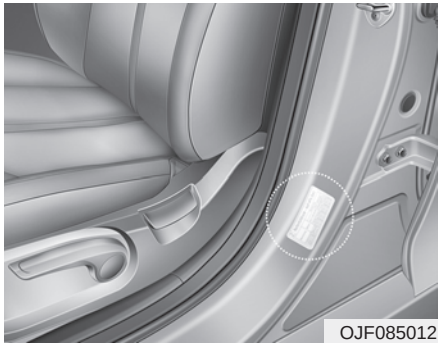

OJF085012

The tires supplied on your new vehicle are chosen to provide the best performance for normal driving.

The tire label located on the driver's side center pillar gives the tire pressures recommended for your vehicle.

ENGINE NUMBER

■ Gasoline engine (Nu 2.0 GDI)

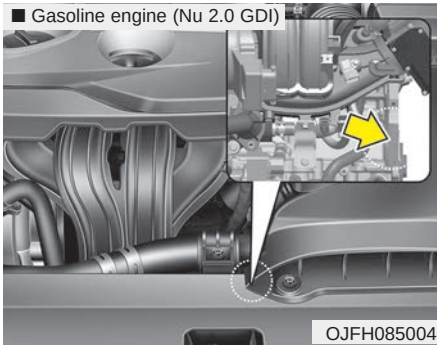

OJFH085004

The engine number is stamped on the engine block as shown in the drawing.

AIR CONDITIONER COMPRESSOR LABEL

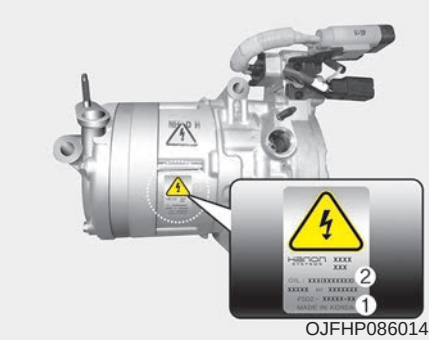

OJFHP086014

A compressor label informs you the type of compressor your vehicle is equipped with such as model, supplier part number, production number, refrigerant (1) and refrigerant oil (2).

Index

A

Active ECO system. 6-81
Plug-in hybrid vehicle 6-81
Air bag - advanced supplemental restraint system. . . . 3-43
Adding equipment to or modifying your air bag-equipped vehicle 3-70
Air bag warning label. 3-70
Air bag warning light 3-46
Curtain air bag 3-63
Driver's and passenger's front air bag 3-58
How does the air bag system operate?. 3-44
Inflation and non-inflation conditions of the air bag . 3-64
Occupant Detection System (ODS) 3-50
Side air bag. 3-61
SRS Care 3-69
SRS components and functions 3-47
Air cleaner 8-28
Filter replacement. 8-28
Air conditioner compressor label 9-9
Air conditioning system 9-5
Appearance care 8-88
Exterior care 8-88
Interior care 8-93
Audio System 5-2
Antenna 5-2
How vehicle audio works. 5-3
Automatic climate control system 4-122
Automatic heating and air conditioning. 4-123
Checking the amount of air conditioner refrigerant and compressor lubricant 4-134
Climate control air filter. 4-134
Manual heating and air conditioning 4-124
System operation 4-132
Automatic transaxle 6-11
Automatic transaxle operation 6-11
Good driving practices 6-17

B

Battery. 8-36
For best battery service 8-36
Recharging the battery 8-37
Reset items 8-38
Before driving 6-4
Before entering vehicle 6-4
Before starting 6-4
Necessary inspections 6-4
Blind-spot Collision Warning (BCW) 6-83
BCW (Blind-Spot Collision Warning)/ LCA (Lane Change Assist) 6-84
Driver's Attention 6-91
RCCW (Rear Cross-Traffic Collision Warning) . . . 6-87
Brake fluid 8-25
Checking the brake fluid level 8-25

Brake system 6-18
Anti-lock Brake System (ABS) 6-31
Auto hold 6-27
Electronic Parking Brake (EPB) 6-21
Electronic Stability Control (ESC) 6-33
Good braking practices 6-39
Hill-start Assist Control (HAC) 6-39
Parking brake – Foot type 6-20
Power brakes 6-18
Vehicle Stability Management (VSM) 6-37
Warning messages 6-30
Bulb wattage 9-3

C

Charging the plug-in hybrid vehicle H4
Checking fluid levels 8-17
Child Restraint System (CRS) 3-32
Children always in the rear 3-32
Installing a Child Restraint System (CRS) 3-36
Selecting a Child Restraint System (CRS) 3-33
Clean air 4-139
Climate control air filter 8-30
Filter inspection 8-30
Components of the hybrid/plug-in hybrid vehicle H34
Coolant 8-21
Changing the coolant 8-24
Checking the coolant level 8-21
Engine coolant 8-22
Inverter coolant 8-22
Recommended coolant 8-23
Cruise control system 6-56
To cancel cruise control 6-58
To decrease the cruising speed 6-58
To increase cruise control set speed 6-57
To resume cruising speed at more than approximately 30 km/h (20 mph) 6-59
To set cruise control speed 6-57
To temporarily accelerate with the cruise control on . 6-58
To turn cruise control off 6-59

D

Declaration of Conformity 5-6
IC 5-6
Defroster 4-121
Rear window defroster 4-121
Dimensions 9-2
Door locks 4-14
Child-protector rear door lock 4-17
Impact sensing door unlock system 4-17
Operating door locks from inside the vehicle 4-15
Operating door locks from outside the vehicle 4-14
Drive mode integrated control system 6-79
Hybrid vehicle 6-79
Driving the hybrid/plug-in hybrid vehicle H21

E

Economical operation 6-99
Emergency starting 7-5
Jump starting 7-5
Push-starting 7-6
Emission control system 8-96
Crankcase emission control system 8-96
Evaporative emission control (including ORVR: Onboard Refueling Vapor Recovery) system 8-96
Exhaust emission control system 8-97
Energy flow hybrid/plug-in hybrid vehicle H28
Engine 9-2
Engine compartment 2-6,8-3
Engine maintenance mode (for plug-in Hybrid) 8-20
Starting engine maintenance mode 8-20
Stopping engine maintenance mode 8-20
Engine number 9-9
Engine oil 8-18
Changing the engine oil and filter 8-19
Checking the engine oil level 8-18
Engine start/stop button 6-6
Engine start/stop button position 6-6
Illuminated engine start/stop button 6-6
Starting the hybrid system 6-8
Explanation of scheduled maintenance items 8-14
Exterior overview 2-2

F

Forward Collision-avoidance Assist (FCA) 6-41
Brake operation 6-44
FCA front radar/camera sensor 6-45
FCA warning message and system control 6-43
Limitation of the system 6-50
Recognizing pedestrians 6-54
System malfunction 6-47
System setting and activation 6-41
Fuel filler lid (Hybrid) 4-31
Closing the fuel filler lid 4-31
Emergency fuel filler lid release 4-34
Opening the fuel filler lid 4-31
Fuel filler lid (plug-in Hybrid) 4-35
Closing the fuel filler lid 4-37
Emergency fuel filler lid release 4-37
Opening the fuel filler lid 4-35
Fuel requirements 1-2
Do not use methanol 1-4
Fuel additives 1-4
Gasoline containing alcohol and methanol 1-2
Operation in foreign countries 1-4
Fuses 8-54
Engine compartment fuse replacement 8-57
Fuse/relay panel description 8-60
Inner panel fuse replacement 8-56

G

Gross vehicle weight. 9-5

H

HEV (Hybrid electric vehicle) system H2
HEV/PHEV powertrain 1-5
Hood 4-29
Closing the hood 4-30
Hood open warning 4-29
Opening the hood. 4-29

I

If an accident occurs. 7-29
If the engine overheats 7-7
If the engine will not start 7-4
If engine doesn't turn over or turns over slowly 7-4
If engine turns over normally but does not start 7-4
If you have a flat tire (With Tire Mobility Kit) 7-15
Checking the tire inflation pressure. 7-22
Components of the Tire Mobility Kit 7-18
Distributing the sealant 7-22
Introduction 7-16
Notes on the safe use of the Tire Mobility Kit 7-16
Technical Data 7-23
Using the Tire Mobility Kit 7-19
Important safety precautions 3-2
Air bag hazards 3-2
Always wear your seat belt 3-2
Control your speed. 3-3
Driver distraction 3-2
Keep your vehicle in safe condition. 3-3
Restrain all children 3-2
In case of an emergency while driving. 7-3
If the engine stalls at a crossroad or crossing 7-3
If the engine stalls while driving 7-3
If you have a flat tire while driving 7-3
Instrument cluster 4-54
Gauges 4-56
Instrument cluster control 4-55
LCD display control. 4-55
Transaxle shift indicator. 4-61
Instrument panel overview 2-5
Interior features. 4-142
Air ventilation seat 4-144
Bottle holder. 4-142
Coat hook 4-150
Cup holder 4-142
Floor mat anchor(s) 4-151
Power outlet 4-145
Seat warmer 4-143
Side curtain. 4-152
Sunvisor 4-144

USB charger 4-146
Wireless smart phone charging system 4-147
Interior lights 4-117
Automatic turn off function 4-117
Glove box lamp 4-119
Map lamp 4-118
Room lamp 4-117
Trunk room lamp 4-119
Vanity mirror lamp 4-119
Interior overview 2-4

L

Lane Departure Warning (LDW) system 6-94
LDW operation 6-95
The LDW does not operate when 6-97
Warning indicator 6-96
LCD display 4-62
LCD modes 4-62
Service mode 4-63
User settings mode 4-65
Light bulbs 8-74
Back-up lamp bulb replacement 8-83
Bulb replacement precaution 8-74
Front turn signal lamp bulb replacement 8-79
Glove box lamp bulb replacement 8-87
Headlamp (High beam) bulb replacement
(Headlamp Type A) 8-78
Headlamp (Low beam) bulb replacement
(Headlamp Type A) 8-76
Headlamp (Low/High beam, LED type) bulb
replacement (Headlamp Type B) 8-79
High mounted stop lamp bulb replacement 8-84
License plate lamp bulb replacement 8-84
Light bulb position (front) 8-75
Light bulb position (rear) 8-75
Light bulb position (side) 8-76
Map lamp bulb replacement 8-85
Personal lamp bulb replacement 8-86
Position lamp + DRL (LED type) bulb replacement . 8-80
Rear turn signal lamp bulb replacement 8-81
Room lamp bulb replacement 8-86
Side repeater lamp bulb replacement 8-81
Stop and tail lamp (LED type) bulb replacement . . 8-82
Trunk lamp bulb replacement 8-87
Vanity mirror lamp bulb replacement 8-85
Lighting 4-104
AFLS (Adaptive Front Lighting System) 4-112
Battery saver function 4-104
Check headlight 4-111
Daytime running light 4-104
Headlight leveling device 4-112
High beam assist 4-107
High beam operation 4-106
Lighting control 4-104
Turn signals and lane change signals 4-110

Luggage volume 9-5

M

Maintenance services 8-4
Owner maintenance precautions 8-5
Owner's responsibility 8-4
Mirrors 4-49
Inside rearview mirror 4-49
Outside rearview mirror 4-50

O

Owner maintenance 8-6
Owner maintenance schedule. 8-6

P

Panoramic sunroof 4-38
Closing the sunroof 4-43
Resetting the sunroof 4-43
Sliding the sunroof 4-41
Sunroof open warning 4-39
Sunshade. 4-40
Tilting the sunroof 4-43
Parking brake 8-27
Checking the parking brake 8-27
Parking distance warning-reverse 4-99
Non-operational conditions of the parking distance warning-reverse system 4-100
Operation of the parking distance warning-reverse . 4-99
Parking distance warning-reverse system precautions 4-101
Self-diagnosis 4-101
PHEV (Plug-in electric vehicle) system H3

R

Rear view monitor 4-102
Recommended lubricants and capacities 9-6
Recommended SAE viscosity number. 9-7
Road warning 7-2
Hazard warning flasher 7-2

S

Scheduled maintenance service 8-8
Seat 3-4
Driver position memory system (for power seat) . . 3-11
Front seat adjustment - manual 3-7
Front seat adjustment - power 3-8
Headrest (for front seat). 3-12
Rear seat adjustment 3-15
Seatback pocket 3-15

Seat belts 3-21
Care of seat belts 3-31
Pre-tensioner seat belt 3-27
Seat belt precautions 3-29
Seat belt restraint system 3-21
Smart Cruise Control with Stop & Go system 6-60
Limitations of the system 6-73
Smart Cruise Control speed 6-62
Smart Cruise Control switch 6-62
To adjust the sensitivity of Smart Cruise Control . . 6-72
To convert to cruise control mode 6-72
Vehicle to vehicle distance setting 6-67
When there is a vehicle ahead of you in your lane . 6-68
Smart key 4-4
Battery replacement 4-8
Loss of the smart key 4-6
Record your key number 4-4
Smart key function 4-4
Smart key immobilizer system 4-9
Smart key precautions 4-7
Smart trunk 4-19
Detecting area 4-22
Emergency trunk safety release 4-23
How to deactivate the smart trunk function using the smart key 4-21
How to use the smart trunk 4-19
Special driving conditions 6-101
Driving at night 6-102
Driving in flooded areas 6-104
Driving in the rain 6-103
Driving off-road 6-104
Hazardous driving conditions 6-101
Highway driving 6-104
Rocking the vehicle 6-101
Smooth cornering 6-102
Starting the hybrid/plug-in hybrid vehicle (smart key) H32
Steering wheel 4-45
Electric Power Steering (EPS) 4-45
Heated steering wheel 4-47
Horn 4-48
Tilt and telescopic steering 4-46
Storage compartments 4-140
Center console storage 4-140
Glove box 4-140
Sunglass holder 4-141

T

Theft-alarm system 4-11
Armed stage 4-11
Disarmed stage 4-12
Theft-alarm stage 4-12

Tire Pressure Monitoring System (TPMS) 7-9
Changing a tire with TPMS 7-13
Check tire pressure 7-9
Low tire pressure position telltale 7-11
Tire specification and pressure label 9-9
Tires and wheels 9-4
Tires and wheels 8-39
All season tires 8-51
Checking tire inflation pressure 8-40
Low aspect ratio tire 8-52
Radial-ply tires 8-52
Recommended cold tire inflation pressures 8-39
Snow tires 8-51
Summer tires 8-51
Tire care 8-39
Tire maintenance 8-44
Tire pressure 8-40
Tire replacement 8-43
Tire rotation 8-41
Tire sidewall labeling 8-44
Tire traction 8-44
Wheel alignment and tire balance 8-42
Wheel replacement 8-43
Towing 7-24
Emergency towing 7-26
Removable towing hook 7-25
Towing service 7-24
Trailer Towing 6-107
Trip modes (Trip computer) 4-70
A/V mode 4-75
Assist mode 4-75
Digital speedometer 4-74
Fuel economy 4-70
One time driving information mode 4-74
Trip A/B 4-73
Trip modes 4-70
Turn by turn mode 4-74
Warning messages 4-75

V

Vehicle break-in process 1-5
Vehicle certification label 9-8
Vehicle data collection and event data recorders 1-6
Vehicle identification number (VIN) 9-8
Vehicle load limit 6-108
Certification label 6-111
Tire and loading information label 6-108
Vehicle weight 6-112
Base curb weight 6-112
Cargo weight 6-112
GAW (Gross Axle Weight) 6-112
GAWR (Gross Axle Weight Rating) 6-112
GVW (Gross Vehicle Weight) 6-112
GVWR (Gross Vehicle Weight Rating) 6-112
Vehicle curb weight 6-112

W

Warning and indicator lights. 4-85
Indicator lights 4-93
Warning lights 4-85
Washer fluid 8-26
Checking the washer fluid level. 8-26
Welcome system 4-120
Headlight (Headlamp) escort function. 4-120
Interior light 4-120
Pocket lamp 4-120
Windows 4-24
Power windows 4-25
Windshield defrosting and defogging. 4-136
Automatic climate control system 4-136
Defogging logic 4-137
Winter driving. 6-105
Carry emergency equipment 6-107
Change to "winter weight" oil if necessary 6-106
Check battery and cables 6-106
Check spark plugs and ignition system 6-106
Don’t let your parking brake freeze. 6-107
Don't let ice and snow accumulate underneath . . . 6-107
Snowy or icy conditions. 6-105
To keep locks from freezing. 6-106
Use approved window washer anti-freeze in system. 6-106
Use high quality ethylene glycol coolant. 6-106
Wiper blades 8-32
Blade inspection. 8-32
Blade replacement 8-32
Wipers and washers 4-113
Front windshield washers. 4-115
Windshield wipers 4-113

ETC

360° camera monitoring system 4-103