2019

GMC

Sierra/Sierra Denali Owner's Manual

gmc.com (U.S.)
gmccanada.ca (Canada)

Contents

Introduction 2
In Brief 5
Keys, Doors, and Windows 31
Seats and Restraints 68
Storage 126
Instruments and Controls 131
Lighting 178
Infotainment System 189
Climate Controls 190
Driving and Operating 198
Vehicle Care 315
Service and Maintenance 417
Technical Data 433
Customer Information 437
Reporting Safety Defects 447
OnStar 451
Connected Services 459
Index 463

Introduction

The names, logos, emblems, slogans, vehicle model names, and vehicle body designs appearing in this manual including, but not limited to, GM, the GM logo, GMC, the GMC Truck Emblem, SIERRA, and DENALI are trademarks and/or service marks of General Motors LLC, its subsidiaries, affiliates, or licensors.

For vehicles first sold in Canada, substitute the name “General Motors of Canada Company” for GMC Division wherever it appears in this manual.

This manual describes features that may or may not be on the vehicle because of optional equipment that was not purchased on the vehicle, model variants, country specifications, features/applications that may not be available in your region, or changes subsequent to the printing of this owner’s manual.

If the vehicle has the Duramax diesel engine, see the Duramax diesel supplement for additional and specific information on this engine.

Refer to the purchase documentation relating to your specific vehicle to confirm the features.

Keep this manual in the vehicle for quick reference.

Canadian Vehicle Owners

A French language manual can be obtained from your dealer, at www.helminc.com, or from:

Propriétaires Canadiens

On peut obtenir un exemplaire de ce guide en français auprès du concessionnaire ou à l'adresse suivante:

Helm, Incorporated
Attention: Customer Service
47911 Halyard Drive
Plymouth, MI 48170
USA

Using this Manual

To quickly locate information about the vehicle, use the Index in the back of the manual. It is an alphabetical list of what is in the manual and the page number where it can be found.

Danger, Warning, and Caution

Warning messages found on vehicle labels and in this manual describe hazards and what to do to avoid or reduce them.

Litho in U.S.A.
Part No. 23400205 C Third Printing

©2019 General Motors LLC. All Rights Reserved.

⚠ Danger

Danger indicates a hazard with a high level of risk which will result in serious injury or death.

⚠ Warning

Warning indicates a hazard that could result in injury or death.

Caution

Caution indicates a hazard that could result in property or vehicle damage.

A circle with a slash through it is a safety symbol which means “Do Not,” “Do not do this,” or “Do not let this happen.”

Symbols

The vehicle has components and labels that use symbols instead of text. Symbols are shown along with the text describing the operation or information relating to a specific component, control, message, gauge, or indicator.

: Shown when the owner’s manual has additional instructions or information.

: Shown when the service manual has additional instructions or information.

: Shown when there is more information on another page — “see page.”

Vehicle Symbol Chart

Here are some additional symbols that may be found on the vehicle and what they mean. See the features in this manual for information.

: Air Conditioning System

: Air Conditioning Refrigerant Oil

: Airbag Readiness Light

: Antilock Brake System (ABS)

: Brake System Warning Light

: Dispose of Used Components Properly

: Do Not Apply High Pressure Water

: Engine Coolant Temperature

: Flame/Fire Prohibited

: Flammable

: Forward Collision Alert

: Fuse Block Cover Lock Location

: Fuses

: ISOFIX/LATCH System Child Restraints

: Keep Fuse Block Covers Properly Installed

: Lane Change Alert

: Lane Departure Warning

: Lane Keep Assist

: Malfunction Indicator Lamp

: Oil Pressure

: Park Assist

: Pedestrian Ahead Indicator

: Power

: Rear Cross Traffic Alert

: Registered Technician

: Remote Vehicle Start

: Seat Belt Reminders

: Side Blind Zone Alert

: Stop/Start

: Tire Pressure Monitor

: Traction Control/StabiliTrak/ Electronic Stability Control (ESC)

: Under Pressure

: Vehicle Ahead Indicator

In Brief

Instrument Panel

Instrument Panel 6

Initial Drive Information

Initial Drive Information 8
Stop/Start System 8
Remote Keyless Entry (RKE) System 9
Remote Vehicle Start 9
Door Locks 10
Windows 10
Seat Adjustment 11
Memory Features 13
Heated and Ventilated Seats . . . 13
Head Restraint Adjustment 14
Seat Belts 14
Passenger Sensing System . . . 14
Mirror Adjustment 15
Steering Wheel Adjustment 16
Interior Lighting 17
Exterior Lighting 18
Windshield Wiper/Washer 19
Climate Controls 20
Transmission 21
Four-Wheel Drive 22

Vehicle Features

Infotainment System 23
Steering Wheel Controls 23
Cruise Control 23
Driver Information Center (DIC) 23
Forward Collision Alert (FCA) System 24
Forward Automatic Braking (FAB) 24
Front Pedestrian Braking (FPB) System 24
Lane Keep Assist (LKA) 25
Lane Change Alert (LCA) 25
Surround Vision 25
Rear Vision Camera (RVC) 25
Rear Cross Traffic Alert (RCTA) System 25
Park Assist 25
Power Outlets 26
Universal Remote System 26
Sunroof 26

Performance and Maintenance

Traction Control/Electronic Stability Control 27
Tire Pressure Monitor 28
Fuel (Gasoline - Except L87 6.2L Engine) 28
Fuel (Gasoline - L87 6.2L Engine) 29
Fuel (Diesel) 29
E85 or FlexFuel 29
Engine Oil Life System 29
Driving for Better Fuel Economy 30
Roadside Assistance Program 30

Instrument Panel

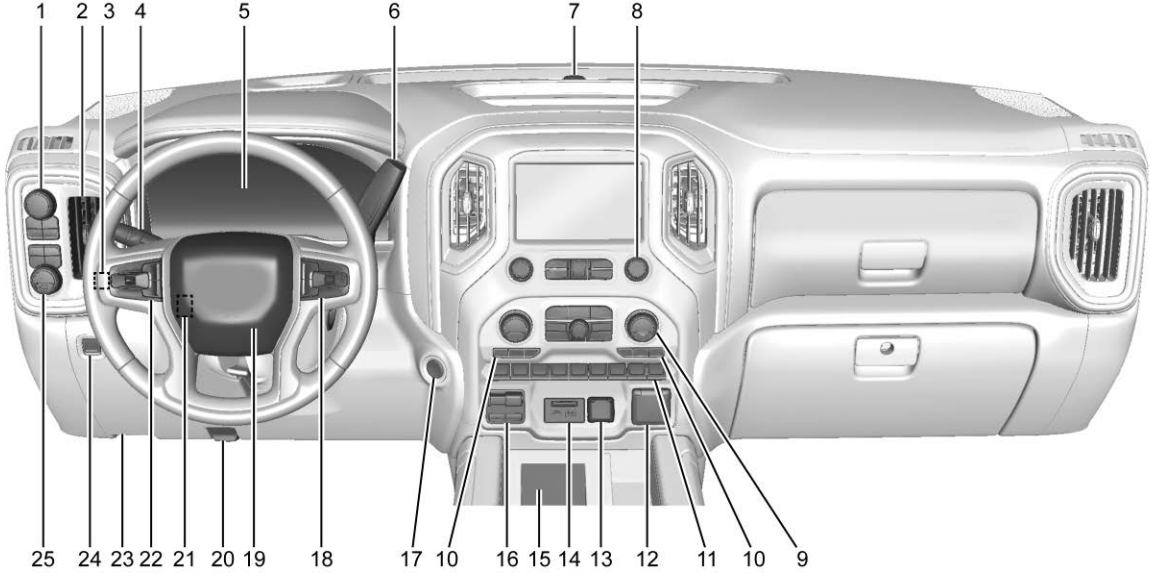

1. Tow/Haul Mode (On Some Models). See *Driver Mode Control* ⇨ *249*.

   Automatic Transfer Case Control (If Equipped). See *Four-Wheel Drive* ⇨ *238*.

   Driver Mode Control ⇨ *249* (If Equipped).
2. *Air Vents* ⇨ *196*.
3. *Head-Up Display (HUD)* ⇨ *165* (If Equipped).
4. Turn Signal Lever. See *Turn and Lane-Change Signals* ⇨ *183*.

   Windshield Wiper/Washer ⇨ *133*.
5. *Instrument Cluster* ⇨ *140*.
6. Shift Lever. See *Automatic Transmission* ⇨ *231*.

   Range Selection Mode. See *Manual Mode* ⇨ *234*.
7. Light Sensor. See *Automatic Headlamp System* ⇨ *181*.
8. *Infotainment* ⇨ *189*.
9. *Climate Control Systems* ⇨ *190* (If Equipped).

   Dual Automatic Climate Control System ⇨ *192* (If Equipped).
10. *Heated and Ventilated Front Seats* ⇨ *76* (If Equipped).
11. P Park Assist Switch (If Equipped). See *Assistance Systems for Parking or Backing* ⇨ *258*.

    OFF *Traction Control/Electronic Stability Control* ⇨ *246*.

    Hazard Warning Flashers ⇨ *182*.

    Lane Keep Assist (LKA) ⇨ *273* (If Equipped).

    Hill Descent Control Switch (If Equipped). See *Hill Descent Control (HDC)* ⇨ *248*.

    Power Assist Steps ⇨ *54* (If Equipped).

    Power Release Tailgate (If Equipped). See *Tailgate* ⇨ *48*.

    DC/AC Switch. See *Power Outlets* ⇨ *134*.

    A Auto Stop Disable Switch (If Equipped). See *Stop/Start System* ⇨ *224*.

    Express Window Down Button (If Equipped). See *Power Windows* ⇨ *64*.

    Tow/Haul Mode (On Some Models). See *Driver Mode Control* ⇨ *249*.
12. Power Outlet (Alternating Current) (If Equipped). See *Power Outlets* ⇨ *134*.
13. *Power Outlets* ⇨ *134*.
14. USB Port. See the infotainment manual.
15. *Wireless Charging* ⇨ *137* (If Equipped).
16. Trailer Brake Control Panel (If Equipped). See “Integrated Trailer Brake Control System” under *Towing Equipment* ⇨ *289*.

17. ENGINE START/STOP. See *Ignition Positions (Key Access)* ⇨ *219* or *Ignition Positions (Keyless Access)* ⇨ *221*.
18. *Steering Wheel Controls* ⇨ *133* (If Equipped).

    Driver Information Center (DIC) Controls. See *Driver Information Center (DIC) (Midlevel and Uplevel)* ⇨ *162* or *Driver Information Center (DIC) (Base Level)* ⇨ *161*.
19. *Horn* ⇨ *133*.
20. Hood Release. See *Hood* ⇨ *318*.
21. *Steering Wheel Adjustment* ⇨ *132* (Out of View).
22. *Cruise Control* ⇨ *254*.

    Forward Collision Alert (FCA) System ⇨ *264* (If Equipped).
23. Data Link Connector (DLC) (Out of View). See *Malfunction Indicator Lamp (Check Engine Light)* ⇨ *151*.
24. *Electric Parking Brake* ⇨ *244*.
25. *Fog Lamps* ⇨ *183* (If Equipped).

    Instrument Panel Illumination Control ⇨ *185*.

    Exterior Cargo Lamps ⇨ *184*.

    Exterior Lamp Controls ⇨ *178*.

    Task Lighting ⇨ *184* (If Equipped).

Initial Drive Information

This section provides a brief overview about some of the important features that may or may not be on your specific vehicle.

For more detailed information, refer to each of the features which can be found later in this owner's manual.

Stop/Start System

If equipped, the Stop/Start system will shut off the engine to help conserve fuel. It has components designed for the increased number of starts.

When the brakes are applied and the vehicle is at a complete stop, the engine may turn off. When stopped, the tachometer displays AUTO STOP. See *Tachometer* ⇨ *145*. When the brake pedal is released or the accelerator pedal is pressed, the engine will restart. See *Stop/Start System* ⇨ *224*.

Remote Keyless Entry (RKE) System

The Remote Keyless Entry (RKE) transmitter functions may work from up to 60 m (197 ft) away from the vehicle.

Keyless Access

Key Access

: Press to unlock the driver door. Press again within three seconds to unlock all remaining doors and the tailgate, if equipped.

: Press to lock all doors and the tailgate, if equipped. Lock and unlock feedback can be personalized. See *Vehicle Personalization* ⇨ *170*.

: Press and release one time to initiate vehicle locator. Press and hold for more than three seconds to sound the panic alarm. Press again to cancel the panic alarm.

: Press twice quickly to release the tailgate, if equipped.

See *Keys* ⇨ *31* and *Remote Keyless Entry (RKE) System Operation (Keyless Access)* ⇨ *34* or *Remote Keyless Entry (RKE) System Operation (Key Access)* ⇨ *42*.

Remote Vehicle Start

If equipped, the engine can be started from outside of the vehicle.

Starting the Vehicle

1. Press and release on the RKE transmitter.
2. Immediately press and hold for at least four seconds or until the turn signal lamps flash.

Start the vehicle normally after entering.

When the vehicle starts, the parking lamps will turn on.

Remote start can be extended.

Canceling a Remote Start

To cancel a remote start, do one of the following:

- Press and hold until the parking lamps turn off.
- Turn on the hazard warning flashers.
- Turn the vehicle on and then off.

See *Remote Vehicle Start* ⇨ *44*.

Door Locks

There are several ways to lock and unlock the vehicle.

From outside, use one of the following:

- Keyless Access, if equipped.
- The Remote Keyless Entry (RKE) transmitter.
- The key in the driver door (Key Access). For Keyless Access, push the button on the RKE transmitter to remove the key.

From inside:

- Use the power door lock switch.
- Push down or pull up on the manual door locks.
- Pull the door handle once to unlock the door. Pull again to open the door.

Power Door Locks

: Press to lock the doors.

: Press to unlock the doors.

See *Door Locks* ⇨ *45* and *Power Door Locks* ⇨ *46*.

Windows

Power Windows

Power windows work when the ignition is on, in ACC/ACCESSORY, or when Retained Accessory Power (RAP) is active. See *Retained Accessory Power (RAP)* ⇨ *227*.

Using the window switch, press to open or pull to close the window.

The windows may be temporarily disabled if they are used repeatedly within a short time.

See *Power Windows* ⇨ *64*.

Power Sliding Rear Window

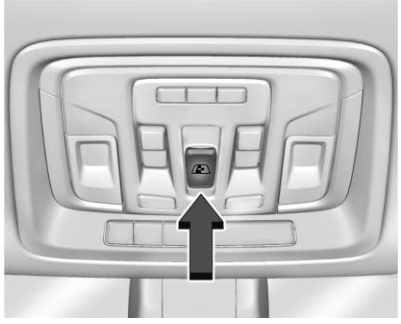

If equipped, the power sliding rear window works when the ignition has been turned on or to ACC/ACCESSORY, or when Retained Accessory Power (RAP) is active. See *Retained Accessory Power (RAP)* ⇨ *227*.

Using the window switch, press to open or pull to close the window.

The power sliding rear window cannot be operated manually. See “Power Sliding Rear Window” in *Rear Windows* ⇨ *66*.

Seat Adjustment

Manual Seats

To adjust a manual seat:

1. Pull the handle at the front of the seat.
2. Slide the seat to the desired position and release the handle.
3. Try to move the seat back and forth to be sure it is locked in place.

See *Seat Adjustment* ⇨ *70*.

Power Seats

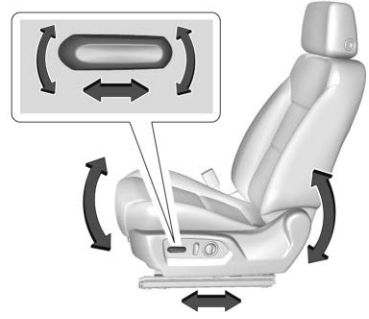

To adjust a power seat, if equipped:

- Move the seat forward or rearward by sliding the control forward or rearward.
- Raise or lower the front part of the seat cushion by moving the front of the control up or down.

- Raise or lower the seat by moving the rear of the control up or down.

See *Power Seat Adjustment* ⇨ *71*.

Reclining Seatbacks

Manual Reclining Seatbacks

To adjust a manual seatback:

1. Lift the lever.

   The seatback will automatically fold forward.

2. To recline, move the seatback rearward to the desired position, then release the lever to lock the seatback in place.
3. Push and pull on the seatback to make sure it is locked.

To return the seatback to the upright position:

1. Lift the lever fully without applying pressure to the seatback, and the seatback will return to the upright position.
2. Push and pull on the seatback to make sure it is locked.

See *Reclining Seatbacks* ⇨ *72*.

Power Reclining Seatbacks

To recline a power seatback, if equipped:

- Tilt the top of the control rearward to recline.
- Tilt the top of the control forward to raise.

See *Reclining Seatbacks* ⇨ *72*.

Memory Features

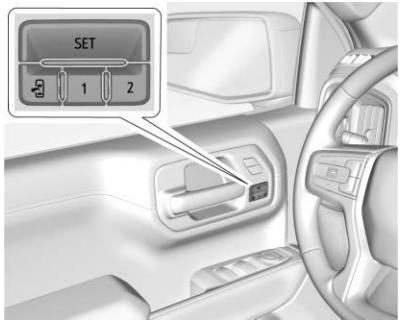

If equipped, memory seats allow two drivers to save and recall their unique seat positions for driving the vehicle, and a shared exit position for getting out of the vehicle. Other feature positions may also be saved, such as power mirrors, if equipped. Memory positions are linked to RKE transmitter 1 or 2 for automatic memory recalls.

Before saving, adjust all available memory feature positions. Turn the ignition on and then press and release SET; a beep will sound. Then immediately press and hold 1, 2, or (Exit) until two beeps sound. To manually recall these positions, press and hold 1, 2, or until the saved position is reached.

When Seat Entry Memory is enabled in vehicle personalization, positions previously saved to memory buttons 1 and 2 are recalled when the ignition is changed from off to on or ACC/ ACCESSORY.

When Seat Exit Memory is enabled in vehicle personalization, the feature automatically recalls the previously saved exit position when exiting the vehicle.

Memory adjustments may not be available upon delivery or after service until steps in “Saving Memory Positions” section are performed. See *Memory Seats* ⇨ *74*.

Heated and Ventilated Seats

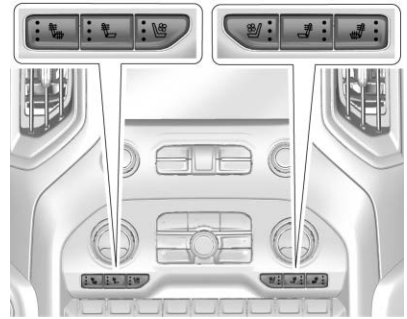

Heated and Ventilated Seat Buttons Shown, Heated Seat Buttons Similar

If equipped, the buttons are on the center stack. To operate, the engine must be running.

Press or to heat the driver or passenger seatback only.

Press or to heat the driver or passenger seat cushion and seatback.

Press ⁘ or ⁘ to ventilate the driver or passenger seat.

See *Heated and Ventilated Front Seats* ⇨ *76*.

Head Restraint Adjustment

Do not drive until the head restraints for all occupants are installed and adjusted properly.

To achieve a comfortable seating position, change the seatback recline angle as little as necessary while keeping the seat and the head restraint height in the proper position.

See *Head Restraints* ⇨ *69* and *Seat Adjustment* ⇨ *70*.

Seat Belts

Refer to the following sections for important information on how to use seat belts properly:

- *Seat Belts* ⇨ *80*
- *How to Wear Seat Belts Properly* ⇨ *81*
- *Lap-Shoulder Belt* ⇨ *83*
- *Lower Anchors and Tethers for Children (LATCH System)* ⇨ *107*

Passenger Sensing System

United States

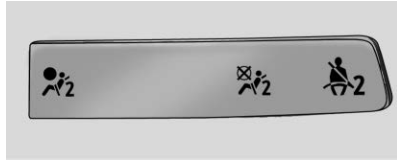

Canada

The passenger sensing system turns off the front outboard passenger frontal airbag under certain conditions. No other airbag is affected by the passenger sensing system. See *Passenger Sensing System* ⇨ *93*.

The passenger airbag status indicator will light on the overhead console when the vehicle is started. See *Passenger Airbag Status Indicator* ⇨ *150*.

Mirror Adjustment

Using hood-mounted air deflectors and add-on convex mirror attachments could decrease mirror performance.

Exterior Mirrors

Manual Mirrors

If equipped, adjust manual mirrors by moving them up and down or left to right to see a little of the side of the vehicle and to have a clear view behind the vehicle.

See *Manual Mirrors* ⇨ *57*.

Power Mirrors

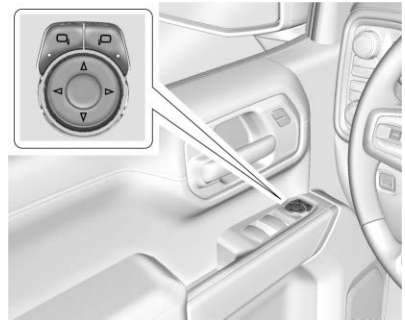

1. Select ▭ or ▭ for the driver or passenger side mirror. The switch will illuminate.
2. Press the arrows on the control pad to move the mirror up, down, right, or left.
3. Adjust each outside mirror so that a little of the vehicle and the area behind it can be seen.

See *Power Mirrors* ⇨ *58*.

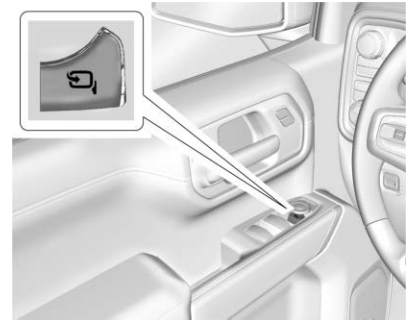

If equipped with power folding mirrors:

1. Press ⟲ to fold the mirrors in to the folded position.
2. Press ⟲ again to fold the mirrors out to the driving position.

For manual, power, and remote folding mirrors, see *Folding Mirrors* ⇨ *58*.

The mirrors may also include a memory function that works with the memory seats. See *Memory Seats* ⇨ *74*.

Interior Mirror

Adjustment

Adjust the mirror for a clear view of the area behind the vehicle.

Manual Dimming Rearview Mirror

If equipped, push the tab forward for daytime use and pull it for nighttime use to avoid glare from the headlamps from behind. See *Manual Rearview Mirror* ⇨ *61*.

Automatic Dimming Rearview Mirror

If equipped, the mirror will automatically reduce the glare of the headlamps from behind. The dimming feature comes on when the vehicle is started.

See *Automatic Dimming Rearview Mirror* ⇨ *61*.

Rear Camera Mirror

If equipped, this automatic dimming rearview mirror provides a wide angle camera view of the area behind the vehicle. Adjust the mirror for a clear view of the area behind the vehicle while the display is off. See *Rear Camera Mirror* ⇨ *61*.

Steering Wheel Adjustment

To adjust the steering wheel:

1. Pull the lever down.
2. Move the steering wheel up or down.
3. Pull the lever up to lock the steering wheel in place.

Tilt and Telescoping Wheel

To adjust the tilt and telescoping steering wheel, if equipped:

1. Pull the lever down.
2. Move the steering wheel up or down.
3. Pull or push the steering wheel closer or away from you.
4. Pull the lever up to lock the steering wheel in place.

Do not adjust the steering wheel while driving.

Interior Lighting

Dome Lamps

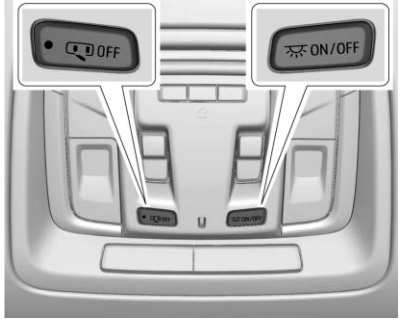

The dome lamp controls are in the overhead console.

To operate, press the following buttons:

OFF : Press to turn off the dome lamps when a door is open. An indicator light on the button will turn on when the dome lamp override is activated. Press OFF again to deactivate this feature and the indicator light will turn off.

The dome lamps will come on when doors are opened.

ON/OFF : Press to turn the dome lamps on manually. Press again to turn the dome lamps off.

Reading Lamps

There are reading lamps on the overhead console and over the rear seats. These lamps come on when any door is opened.

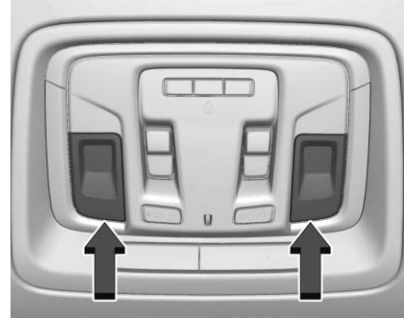

Front Reading Lamps

The front reading lamps are in the overhead console.

Press the lamp lenses to turn the front reading lamps on or off.

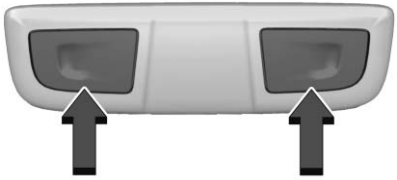

Rear Reading Lamps

The rear reading lamps are over the rear seats.

Press the lamp lens to turn the rear reading lamps on or off.

For more information on interior lighting, see *Instrument Panel Illumination Control* ⇨ *185*.

Exterior Lighting

The exterior lamp control is on the instrument panel to the left of the steering wheel.

⏻ **:** Turns off the automatic headlamps and Daytime Running Lamps (DRL). Turn the headlamp control to ⏻ again to turn the automatic headlamps or DRL back on.

For vehicles first sold in Canada, off will only work when the vehicle is in P (Park).

AUTO : Automatically turns on the headlamps, parking lamps, taillamps, instrument panel lights, roof marker lamps (if equipped), front/rear sidemarker lamps, and license plate lamps.

: Turns on the parking lamps including all lamps, except the headlamps and fog lamps, if equipped.

: Turns on the headlamps together with the parking lamps, taillamps, instrument panel lights, roof marker lamps (if equipped), front/rear sidemarker lamps, and license plate lamps.

See:

- *Exterior Lamp Controls* ⇨ *178*.
- *Daytime Running Lamps (DRL)* ⇨ *181*.
- *Fog Lamps* ⇨ *183*.
- *Task Lighting* ⇨ *184*.

Windshield Wiper/Washer

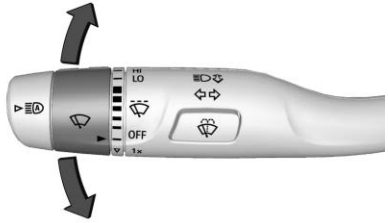

The windshield wiper control is on the turn signal lever.

The windshield wipers are controlled by turning the band with on it.

HI : Use for fast wipes.

LO : Use for slow wipes.

: Turn the band up for more frequent intermittent wipes or down for less frequent intermittent wipes.

OFF : Use to turn the wipers off.

1x : For a single wipe, briefly turn the band down. For several wipes, hold the band down.

: Press on the windshield wiper control to spray windshield washer fluid and activate the wipers.

See *Windshield Wiper/Washer* ⇨ *133*.

Climate Controls

The heating, cooling, and ventilation in the vehicle can be controlled with these systems.

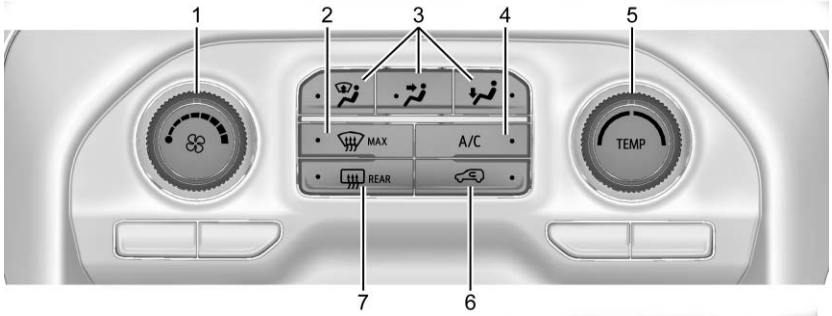

Climate Control System

1. Fan Control
2. MAX Defrost
3. Air Delivery Mode Controls
4. A/C (Air Conditioning)
5. (TEMP) Temperature Control
6. Recirculation
7. Rear Window Defogger (If Equipped)

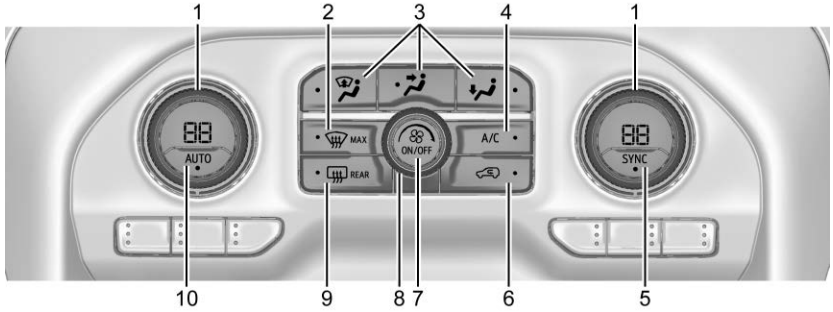

Dual Automatic Climate Control System

1. Driver and Passenger Temperature Controls
2. MAX Defrost
3. Air Delivery Mode Controls
4. A/C (Air Conditioning)
5. SYNC (Synchronized Temperature)
6. Recirculation
7. Power Button
8. Fan Control
9. Rear Window Defogger (If Equipped)
10. AUTO (Automatic Operation)

See *Climate Control Systems* ⇨ *190* or *Dual Automatic Climate Control System* ⇨ *192* (If Equipped).

Transmission

Range Selection Mode

The Range Selection Mode switch is on the shift lever.

1. To enable the Range Selection feature, move the shift lever to the L (Manual Mode) position. The current range will appear next to the L. This is the highest attainable range with all lower gears accessible. As an example, when 5 (Fifth) gear is selected, 1 (First) through 5 (Fifth) gears are available.
2. Press the plus/minus buttons on the shift lever to select the desired range of gears for current driving conditions. See *Manual Mode* ⇨ *234*.

While using Range Selection Mode, cruise control and the Tow/Haul Mode can be used.

Grade Braking is not available when Range Selection Mode is active. See *Tow/Haul Mode* ⇨ *237*.

Four-Wheel Drive

If equipped with four-wheel drive, the engine's driving power can be sent to all four wheels for extra traction.

Transfer Case Controls

Use the transfer case controls to shift into and out of the different four-wheel drive modes.

Automatic Transfer Case

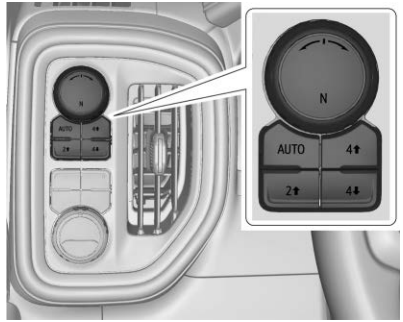

The transfer case controls are to the left of the steering column.

The different drive options that may be available are described as follows.

2 ↑ (Two-Wheel Drive High) : This setting is used for driving in most street and highway situations.

AUTO (Automatic Four-Wheel Drive) : This setting is ideal for use when road surface conditions are variable.

If equipped, use 4 ↓, AUTO, or 4 ↑ to provide additional traction when parking on a steep grade with poor traction such as ice, snow, mud, or gravel.

4 ↑ (Four-Wheel Drive High) : Use this setting when extra traction is needed for conditions such as rough roads, deep snow or most off road situations.

The following options are only available with a two-speed transfer case:

N (Neutral) : Shift to this setting only when towing the vehicle. See *Recreational Vehicle Towing* ⇨ *403* or *Towing the Vehicle* ⇨ *402*.

4 ↓ (Four-Wheel Drive Low) : This setting sends maximum power to all four wheels. Choose 4↓ when driving in deep sand, mud, or snow, and while climbing or descending steep hills.

See *Four-Wheel Drive* ⇨ *238*.

Vehicle Features

Infotainment System

See the infotainment manual for information on the radio, audio players, phone, navigation system, and voice or speech recognition. It also includes information on settings.

Steering Wheel Controls

The infotainment system can be operated by using the steering wheel controls. See “Steering Wheel Controls” in the infotainment manual.

Cruise Control

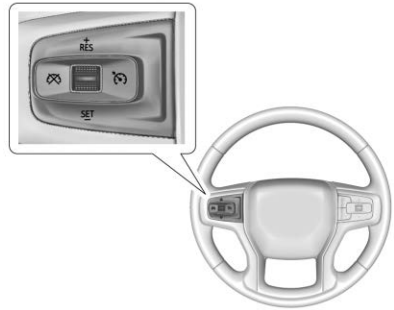

: If equipped, press to turn the system on or off. A white indicator comes on in the instrument cluster when cruise control is on and turns off when cruise control is off.

+ RES : If there is a set speed in memory, press the control up briefly to resume to that speed or press and hold to accelerate. If cruise control is already engaged, use to increase vehicle speed.

SET − : Press the control down briefly to set the speed and activate cruise control. If cruise control is already engaged, use to decrease vehicle speed.

: Press to disengage cruise control without erasing the set speed from memory.

See *Cruise Control* ⇨ *254*.

Driver Information Center (DIC)

The DIC display is in the instrument cluster. It shows the status of many vehicle systems.

If the vehicle has the base level instrument cluster, the trip odometer reset stem is used to operate the DIC.

If the vehicle has the uplevel instrument cluster, the right steering wheel controls are used to operate the DIC.

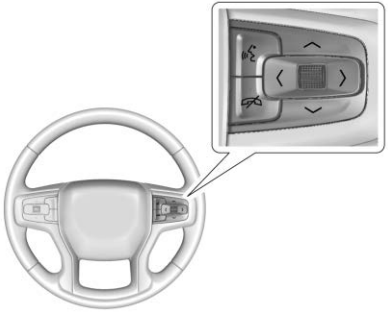

∧ or ∨ : Use the thumbwheel to scroll up or down in a list. Press the thumbwheel to select.

< or > : Press to move between the interactive display zones in the cluster. Press the thumbwheel to select.

See *Driver Information Center (DIC) (Midlevel and Uplevel)* ⇨ *162* or *Driver Information Center (DIC) (Base Level)* ⇨ *161*.

Forward Collision Alert (FCA) System

If equipped, FCA may help avoid or reduce the harm caused by front-end crashes. FCA provides a green indicator, , when a vehicle is detected ahead. This indicator displays amber when following a vehicle much too closely. When approaching a vehicle ahead too quickly, FCA provides a flashing red alert on the windshield and rapidly beeps or pulses the driver seat.

See *Forward Collision Alert (FCA) System* ⇨ *264*.

Forward Automatic Braking (FAB)

If the vehicle has Forward Collision Alert (FCA), it also has FAB, which includes Intelligent Brake Assist (IBA). When the system detects a vehicle ahead in your path that is traveling in the same direction that you may be about to crash into, it can provide a boost to braking or automatically brake the vehicle. This can help avoid or lessen the severity of crashes when driving in a forward gear.

See *Forward Automatic Braking (FAB)* ⇨ *267*.

Front Pedestrian Braking (FPB) System

If equipped, the FPB system may help avoid or reduce the harm caused by front-end crashes with nearby pedestrians when driving in a forward gear. FPB displays an amber indicator, , when a nearby pedestrian is detected directly ahead. When approaching a detected pedestrian too quickly, FPB provides a red flashing alert on the windshield and rapidly beeps or pulses the driver seat. FPB can provide a boost to braking or automatically brake the vehicle.

See *Front Pedestrian Braking (FPB) System* ⇨ *268*.

Lane Keep Assist (LKA)

If equipped, LKA may help avoid crashes due to unintentional lane departures. It may assist by gently turning the steering wheel if the vehicle approaches a detected lane marking without using a turn signal in that direction. It may also provide a Lane Departure Warning (LDW) alert as the lane marking is crossed. The system will not assist or alert if it detects that you are actively steering. Override LKA by turning the steering wheel. LKA uses a camera to detect lane markings between 60 km/h (37 mph) and 180 km/h (112 mph).

See *Lane Departure Warning (LDW)* ⇨ *273* and *Lane Keep Assist (LKA)* ⇨ *273*.

Lane Change Alert (LCA)

If equipped, the LCA system is a lane-changing aid that assists drivers with avoiding lane change crashes that occur with moving vehicles in the side blind zone areas or with vehicles rapidly approaching these areas from behind. The LCA warning display will light up in the corresponding outside mirror and will flash if the turn signal is on. The Side Blind Zone Alert (SBZA) system is included as part of the LCA system.

See *Side Blind Zone Alert (SBZA)* ⇨ *270* and *Lane Change Alert (LCA)* ⇨ *271*.

Surround Vision

If equipped, views around the vehicle appear in the infotainment display to aid with parking and low-speed maneuvers.

See “Surround Vision” under *Assistance Systems for Parking or Backing* ⇨ *258*.

Rear Vision Camera (RVC)

If equipped, RVC shows a view of the area behind the vehicle on the infotainment display when the vehicle is shifted into R (Reverse) to aid with parking and low-speed backing maneuvers.

See *Assistance Systems for Parking or Backing* ⇨ *258*.

Rear Cross Traffic Alert (RCTA) System

If equipped, the RCTA system shows a triangle with an arrow on the infotainment display to warn of traffic behind your vehicle that may cross your vehicle's path while in R (Reverse). In addition, beeps will sound, or the driver seat will pulse.

See *Assistance Systems for Parking or Backing* ⇨ *258*.

Park Assist

If equipped, Rear Park Assist (RPA) uses sensors on the rear bumper to assist with parking and avoiding objects while in R (Reverse). It operates at speeds less than 8 km/h (5 mph). RPA may show a warning triangle on the infotainment display and a graphic on the instrument cluster to provide the object distance. In addition, multiple beeps or seat pulses may occur if very close to an object.

The vehicle may also have the Front Park Assist system.

See *Assistance Systems for Parking or Backing* ⇨ *258*.

Power Outlets

Accessory power outlets can be used to plug in electrical equipment, such as a cell phone, MP3 player, etc.

The vehicle has one accessory power outlet under the climate control system and one accessory power outlet on the rear of the center console, if equipped, or on the rear of the bench seat, if equipped.

Lift the cover to access and replace when not in use.

See *Power Outlets* ⇨ *134*.

Universal Remote System

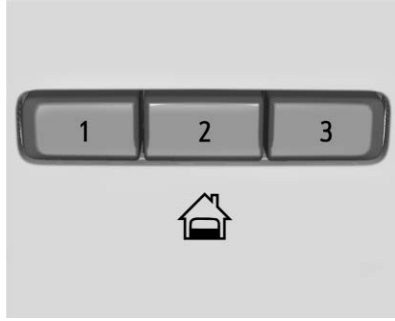

If equipped, the Universal Remote system enables the vehicle to control three different devices, ranging from garage doors and gates to home lighting. These buttons are in the overhead console.

See *Universal Remote System* ⇨ *174*.

Sunroof

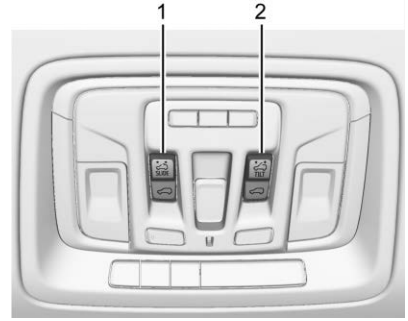

1. SLIDE Switch
2. TILT Switch

If equipped, the sunroof operates when the ignition is on or in ACC/ACCESSORY, or when Retained Accessory Power (RAP) is active. See *Retained Accessory Power (RAP)* ⇨ *227*.

Slide Switch

Express-Open/Express-Close : To express-open the sunroof, fully press and release SLIDE (1). Press and release SLIDE (1) again to stop the movement. To express-close the sunroof, fully press and release (1). Press and release (1) again to stop the movement.

Open/Close (Manual Mode) : To open the sunroof, press and hold SLIDE (1). Release SLIDE (1) to stop the movement. Press and hold (1) to close the sunroof. Release (1) to stop the movement.

Tilt Switch

Vent : From the closed position, press TILT (2) to vent the sunroof. Press (2) to close the vent.

When the sunroof is opened, an air deflector will automatically raise. The air deflector will retract when the sunroof is closed.

The sunroof also has a sunshade, which can be pulled forward to block sun rays. The sunshade must be opened and closed manually.

The sunroof has an automatic reversal system that is only active when the sunroof is operated in express-close mode.

If an object is in the path while express-closing, the reversal system will detect an object, stop, and open the sunroof again.

See *Sunroof* ⇨ *66*.

Performance and Maintenance

Traction Control/ Electronic Stability Control

The vehicle has a Traction Control System (TCS) that limits wheel spin and the StabiliTrak/Electronic Stability Control (ESC) system that assists with directional control of the vehicle in difficult driving conditions. Both systems come on automatically when the vehicle is started and begins to move.

- To turn off TCS, press and release OFF on the center stack. The traction off light TC displays in the instrument cluster. The appropriate Driver Information Center (DIC) message displays.
- To turn off both TCS and StabiliTrak/ESC, press and hold OFF until TC and OFF illuminate

in the instrument cluster and the appropriate DIC message displays.

- Press and release ⚙ OFF again to turn on both systems.

StabiliTrak/ESC will automatically turn on if the vehicle exceeds 56 km/h (35 mph). Traction control will remain off.

See *Traction Control/Electronic Stability Control* ⇨ *246*.

Tire Pressure Monitor

This vehicle may have a Tire Pressure Monitor System (TPMS).

The low tire pressure warning light alerts to a significant loss in pressure of one of the vehicle's tires. If the warning light comes on, stop as soon as possible and inflate the tires to the recommended pressure shown on the Tire and Loading Information label. See *Vehicle Load Limits* ⇨ *211*. The warning light will remain on until the tire pressure is corrected.

The low tire pressure warning light may come on in cool weather when the vehicle is first started, and then turn off as the vehicle is driven. This may be an early indicator that the tire pressures are getting low and the tires need to be inflated to the proper pressure.

The TPMS does not replace normal monthly tire maintenance. Maintain the correct tire pressures.

See *Tire Pressure Monitor System* ⇨ *373*.

Tire Fill Alert (If Equipped)

This feature provides visual and audible alerts outside the vehicle to help when inflating an underinflated tire to the recommended cold tire pressure. See “Tire Fill Alert (If Equipped)” under *Tire Pressure Monitor Operation* ⇨ *374*.

Fuel (Gasoline - Except L87 6.2L Engine)

Regular Unleaded Fuel

Use only Regular 87 octane — (R +M)/2 — or higher unleaded gasoline in your vehicle. TOP TIER Detergent Gasoline is recommended. Do not use gasoline with an octane rating lower as it will result in reduced performance and lower fuel economy. See *Recommended Fuel (Except 6.2L V8 Engine)* ⇨ *275* or *Recommended Fuel (6.2L V8 Engine)* ⇨ *275*.

Fuel (Gasoline - L87 6.2L Engine)

Premium Recommended

Use premium 93 octane — (R+M)/2 — unleaded gasoline in your vehicle. TOP TIER Detergent Gasoline is recommended. Unleaded gasoline with an octane rating as low as 87 may be used, but it will reduce performance and fuel economy. See *Recommended Fuel (Except 6.2L V8 Engine)* ⇨ *275* or *Recommended Fuel (6.2L V8 Engine)* ⇨ *275*.

Fuel (Diesel)

For diesel vehicles, do not use gasoline. See “Fuel for Diesel Engines” in the Duramax diesel supplement.

E85 or FlexFuel

FlexFuel Possible

Certain models are compatible with E85 fuel. See *E85 or FlexFuel* ⇨ *276*.

Engine Oil Life System

The engine oil life system calculates engine oil life based on vehicle use and, on most vehicles, displays a DIC message when it is necessary to change the engine oil and filter. The oil life system should be reset to 100% only following an oil change.

Resetting the Oil Life System

To reset the engine oil life system:

1. Display the oil life percentage on the DIC. See *Driver Information Center (DIC) (Midlevel and Uplevel)* ⇨ *162* or *Driver Information Center (DIC) (Base Level)* ⇨ *161*.
2. Press the thumbwheel on the steering wheel, or the trip odometer reset stem if the vehicle does not have DIC controls, for several seconds. When the confirmation message displays, select YES. The oil life will change to 100%.

The oil life system can also be reset as follows:

1. Display the oil life percentage on the DIC. See *Driver Information Center (DIC) (Midlevel and Uplevel)* ⇨ *162* or *Driver Information Center (DIC) (Base Level)* ⇨ *161*.
2. Fully press the accelerator pedal slowly three times within five seconds.
3. If the display changes to 100%, the system is reset.

See *Engine Oil Life System* ⇨ *327*.

Driving for Better Fuel Economy

Driving habits can affect fuel mileage. Here are some driving tips to get the best fuel economy possible:

- Set the climate controls to the desired temperature after the engine is started, or turn them off when not required.
- Avoid fast starts and accelerate smoothly.
- Brake gradually and avoid abrupt stops.
- Avoid idling the engine for long periods of time.
- When road and weather conditions are appropriate, use cruise control.
- Always follow posted speed limits or drive more slowly when conditions require.
- Keep vehicle tires properly inflated.
- Combine several trips into a single trip.
- Replace the vehicle's tires with the same TPC Spec number molded into the tire's sidewall near the size.
- Follow recommended scheduled maintenance.

Roadside Assistance Program

U.S.: 1-888-881-3302

TTY Users (U.S. Only): 1-888-889-2438

Canada: 1-800-268-6800

New GMC owners are automatically enrolled in the Roadside Assistance Program.

See *Roadside Assistance Program* ⇨ *441*.

Keys, Doors, and Windows

Keys and Locks
Keys 31
Remote Keyless Entry (RKE) System 34
Remote Keyless Entry (RKE) System Operation (Keyless Access) 34
Remote Keyless Entry (RKE) System Operation (Key Access) 42
Remote Vehicle Start 44
Door Locks 45
Power Door Locks 46
Delayed Locking 46
Automatic Door Locks 47
Lockout Protection 47
Safety Locks 47

Doors
Tailgate 48
Power Assist Steps 54

Vehicle Security
Vehicle Security 55
Vehicle Alarm System 55
Immobilizer 56
Immobilizer Operation 56

Exterior Mirrors
Convex Mirrors 57
Manual Mirrors 57
Power Mirrors 58
Folding Mirrors 58
Heated Mirrors 59
Automatic Dimming Mirror 59
Blind Spot Mirrors 59
Reverse Tilt Mirrors 60

Interior Mirrors
Interior Rearview Mirrors 61
Manual Rearview Mirror 61
Automatic Dimming Rearview Mirror 61
Rear Camera Mirror 61

Windows
Windows 63
Manual Windows 64
Power Windows 64
Rear Windows 66
Sun Visors 66

Roof
Sunroof 66

Keys and Locks

Keys

⚠ Warning

Leaving children in a vehicle with the ignition key is dangerous and children or others could be seriously injured or killed. They could operate the power windows or other controls or make the vehicle move. The windows will function with the keys in the ignition, and children or others could be caught in the path of a closing window. Do not leave children in a vehicle with the ignition key.

⚠ Warning

If the key is unintentionally rotated while the vehicle is running, the ignition could be moved out of the RUN position. This could be caused by heavy items hanging from the key ring, or by large or long items attached to the key ring that could be contacted by the driver or steering wheel. If the ignition moves out of the RUN position, the engine will shut off, braking and steering power assist may be

(Continued)

Warning (Continued)

impacted, and airbags may not deploy. To reduce the risk of unintentional rotation of the ignition key, do not change the way the ignition key and Remote Keyless Entry (RKE) transmitter, if equipped, are connected to the provided key rings.

The ignition key and key rings, and RKE transmitter, if equipped, are designed to work together as a system to reduce the risk of unintentionally moving the key out of the RUN position. The ignition key has a small hole to allow attachment of the provided key ring. It is important that any replacement ignition keys have a small hole. See your dealer if a replacement key is required.

The combination and size of the rings that came with your keys were specifically selected for your vehicle. The rings are connected to the key like two links of a chain to reduce the risk of unintentionally moving the key out of the RUN position. Do not add any additional items to the ring attached to the ignition key. Attach additional items only to the second ring, and limit added items to a few essential keys or small, light items no larger than an RKE transmitter.

Interference from radio-frequency identification (RFID) tags may prevent the key from starting the vehicle. Keep RFID tags away from the key when starting the vehicle.

The key is used for the ignition, all door locks, and the glove box.

If equipped with memory seats, keys 1 and 2 are linked to seating positions of memory 1 or 2. See *Memory Seats* ⇨ *74*.

Programming Keys

Follow these procedures to program up to eight keys to the vehicle.

Programming with Two Recognized Keys

To program a new key:

1. Insert the original, already programmed key in the ignition and turn the ignition on.
2. Turn the ignition off, and remove the key.
3. Quickly, within five seconds, insert the second original already programmed key in the ignition and turn the ignition on.
4. Turn the ignition off, and remove the key.
5. Insert the key to be programmed and turn the ignition on within five seconds.
6. After a few seconds, the security light will turn off once the key has been programmed.
7. Repeat Steps 1–5 if additional keys are to be programmed.

If a key is lost or damaged, see your dealer to have a new key made.

Programming without Recognized Keys

Program a new key to the vehicle when a recognized key is not available. Canadian regulations require that owners see their dealer.

If two currently recognized keys are not available, follow this procedure to program the first key.

This procedure will take approximately 30 minutes to complete for the first key. The vehicle must be off and all of the keys you wish to program must be with you.

1. Insert the new vehicle key into the ignition.
2. Turn the ignition on. The security light will come on.
3. Wait 10 minutes until the security light turns off.
4. Turn the ignition off.
5. Repeat Steps 2–4 two more times. After the third time, turn the ignition on; the key is

learned and all previously known keys will no longer work with the vehicle.

6. To learn a second key, turn the ignition off, insert the second key to be learned, and turn the ignition on.

After two keys are learned, the remaining keys can be learned by following the procedure in "Programming with Two Recognized Keys."

The key has a bar-coded key tag that the dealer or qualified locksmith can use to make new keys. Store this information in a safe place, not in the vehicle.

See your dealer if a replacement key or additional key is needed.

If it becomes difficult to turn a key, inspect the key blade for debris. Periodically clean with a brush or pick.

If locked out of the vehicle, see *Roadside Assistance Program* ⇨ *441*.

With an active OnStar or connected service plan, an OnStar Advisor may remotely unlock the vehicle. See *OnStar Overview* ⇨ *451*.

Remote Keyless Entry (RKE) System

See *Radio Frequency Statement* ⇨ *447*.

If there is a decrease in the Remote Keyless Entry (RKE) operating range:

- Check the distance. The transmitter may be too far from the vehicle.
- Check the location. Other vehicles or objects may be blocking the signal.
- Check the transmitter's battery. See "Battery Replacement" later in this section.
- If the transmitter is still not working correctly, see your dealer or a qualified technician for service.

Remote Keyless Entry (RKE) System Operation (Keyless Access)

The Keyless Access system allows for vehicle entry when the transmitter is within 1 m (3 ft). See "Keyless Access Operation" later in this section.

The RKE transmitter functions may work up to 60 m (197 ft) away from the vehicle.

Other conditions can affect the performance of the transmitter. See *Remote Keyless Entry (RKE) System* ⇨ *34*.

: Press and release , then immediately press and hold until the turn signal lamps flash or for at least four seconds. The engine may be started from outside the vehicle using the RKE transmitter. See *Remote Vehicle Start* ⇨ *44*.

: Press to lock all doors and the tailgate, if equipped.

If enabled, the turn signal lamps flash and/or the horn may sound on the second press to indicate locking has occurred. If enabled, the horn chirps when is pressed again within three seconds. See *Vehicle Personalization* ⇨ *170*.

If the driver door is open when is pressed, all doors will lock and then the driver door will immediately unlock, if enabled. See *Vehicle Personalization* ⇨ *170*.

If the passenger door is open when is pressed, all doors lock.

Pressing arms the alarm system. See *Vehicle Alarm System* ⇨ *55*.

If equipped with remote mirror folding, pressing and holding for one second will fold the mirrors, if enabled. See *Vehicle Personalization* ⇨ *170*.

: Press once to unlock only the driver door. If is pressed again within three seconds, all remaining doors and the tailgate unlock. The interior lamps may come on and stay on for 20 seconds or until the ignition is turned on.

If enabled, the turn signal lamps flash twice to indicate unlocking has occurred. If enabled, the exterior lamps may turn on. See *Vehicle Personalization* ⇨ *170*.

Pressing on the RKE transmitter disarms the alarm system. See *Vehicle Alarm System* ⇨ *55*.

If equipped with remote mirror folding, pressing and holding for one second will unfold the mirrors, if enabled. See *Vehicle Personalization* ⇨ *170*.

Press and hold until the windows fully open, if remote window operation is enabled. See *Vehicle Personalization* ⇨ *170*.

: Press twice quickly to release the tailgate, if equipped.

: Press and release to initiate vehicle locator. The turn signal lamps flash and the horn sounds three times.

Press and hold for more than three seconds to activate the panic alarm. The turn signal lamps flash and the horn sounds repeatedly for 30 seconds. The alarm turns off when the ignition is turned on or is pressed again. The ignition must be off for the panic alarm to work.

Keyless Access Operation

The Keyless Access system allows for doors and the tailgate to be accessed without pressing the RKE transmitter button. The RKE transmitter must be within 1 m (3 ft) of the tailgate or door being opened. If the vehicle has this feature, there will be a button on the outside door handles.

Keyless Access can be programmed to unlock all doors on the first lock/unlock press from the driver door. See *Vehicle Personalization* ⇨ *170*.

If equipped with memory seats, RKE transmitters 1 and 2 are linked to seating positions of memory 1 or 2. See *Memory Seats* ⇨ *74*.

Keyless Unlocking/Locking from the Driver Door

When the doors are locked and the RKE transmitter is within 1 m (3 ft) of the door handle, pressing the lock/unlock button on the driver door handle will unlock the driver door. If the lock/unlock button is pressed again within five seconds, all passenger doors and the tailgate will unlock.

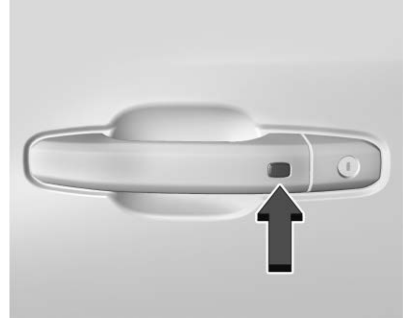

Driver Side Shown, Passenger Side Similar

Pressing the lock/unlock button will cause all doors to lock if any of the following occur:

- It has been more than five seconds since the first lock/unlock button press.
- Two lock/unlock button presses were used to unlock all doors.
- Any vehicle door has been opened and all doors are now closed.

Keyless Unlocking/Locking from the Passenger Doors

When the doors are locked and the RKE transmitter is within 1 m (3 ft) of the door handle, pressing the lock/unlock button on a passenger door handle will unlock all doors. Pressing the lock/unlock button will cause all doors to lock if any of the following occur:

- The lock/unlock button was used to unlock all doors.
- Any vehicle door has been opened and all doors are now closed.

Disable/Enable Keyless Unlocking of Exterior Door Handles and Tailgate

If equipped, keyless unlocking of the exterior door handles and tailgate can be disabled and enabled.

Disabling Keyless Unlocking:

With the vehicle off, press and hold 🔒 and 🔓 on the RKE transmitter at the same time for approximately three seconds. The turn signal lamps will flash four times quickly to indicate access is disabled. Using any exterior handle to unlock the doors or open the tailgate will cause the turn signal lamps to flash four times quickly, indicating access is disabled.
If disabled, disarm the alarm system before starting the vehicle.

Enabling Keyless Unlocking:

With the vehicle off, press and hold 🔒 and 🔓 on the RKE transmitter at the same time for approximately three seconds. The turn signal lamps will flash twice quickly to indicate access is enabled.

Passive Locking

This feature will lock the vehicle several seconds after all doors are closed, if the vehicle is off and at least one RKE transmitter has been removed from the interior, or none remain in the interior.

If other electronic devices interfere with the RKE transmitter signal, the vehicle may not detect the RKE transmitter inside the vehicle.
If passive locking is enabled, the doors may lock with the RKE transmitter inside the vehicle. Do not leave the RKE transmitter in an unattended vehicle.

To customize the doors to automatically lock when exiting the vehicle, see “Remote Lock, Unlock, Start” under *Vehicle Personalization* ⇨ *170*.

Temporary Disable of Passive Locking

Temporarily disable passive locking by pressing and holding 🔓 on the interior door switch with a door open for at least four seconds, or until three chimes are heard. Passive locking will then remain disabled until 🔒 on the interior door is pressed, or until the vehicle is turned on.

Remote Left in Vehicle Alert

When the vehicle is turned off and an RKE transmitter is left in the vehicle, the horn will chirp three times after all doors are closed. To turn on or off see *Vehicle Personalization* ⇨ *170*.

Remote No Longer in Vehicle Alert

If the vehicle is on with a door open and then all doors are closed, the vehicle will check for RKE transmitters inside. If an RKE transmitter is not detected, the Driver Information Center (DIC) will display NO REMOTE DETECTED and the horn will chirp three times. This occurs only once each time the vehicle is driven. To turn on or off see *Vehicle Personalization* ⇨ *170*.

Key Access

To access a vehicle with a dead transmitter battery, see *Door Locks* ⇨ *45*.

Programming Transmitters to the Vehicle

Only RKE transmitters programmed to the vehicle will work. If a transmitter is lost or stolen, a replacement can be purchased and programmed through your dealer. The vehicle can be reprogrammed so that lost or stolen transmitters no longer work. Each vehicle can have up to eight transmitters matched to it.

Programming with Recognized Transmitters

A new transmitter can be programmed to the vehicle when there are two recognized transmitters.

To program, the vehicle must be off and all transmitters, both currently recognized and new, must be with you.

1. Remove the key from a recognized transmitter.
2. Place the two recognized transmitters in the cupholder or on the passenger seat.
3. Insert the vehicle key into the key lock cylinder on the driver door handle. Then turn the key counterclockwise, to the unlock position, five times within 10 seconds.

   The DIC displays READY FOR REMOTE#3, 4, 5 ETC.

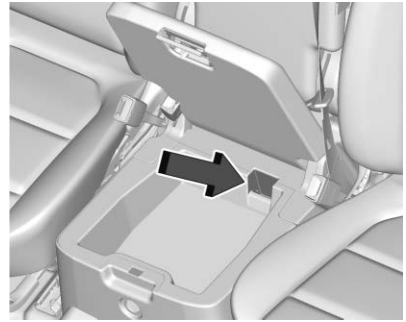

Transmitter Pocket without Bucket Seats

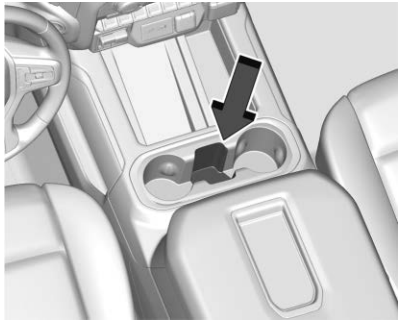

Transmitter Pocket with Bucket Seats

4. Place the new transmitter in the transmitter pocket/insert.
5. Press ENGINE START/STOP. When the transmitter is learned, the DIC display will show that it is ready to program the next transmitter.
6. Remove the transmitter from the transmitter pocket and press 🔒 or 🔓 on the transmitter.

   To program additional transmitters, repeat Steps 4–6.

   When all additional transmitters are programmed, press and hold ENGINE START/STOP for approximately 12 seconds to exit programming mode.
7. Return the key back into the transmitter.

Programming without Recognized Transmitters

If two currently recognized transmitters are not available, follow this procedure to program up to eight transmitters. This feature is not available in Canada. This procedure will take approximately 30 minutes to complete. The vehicle must be off and all transmitters to be programmed must be with you.

1. Remove the vehicle key from the transmitter.
2. Insert the vehicle key into the key lock cylinder on the driver door handle; then turn the key counterclockwise, to the unlock position, five times within 10 seconds.

   The DIC displays REMOTE LEARN PENDING, PLEASE WAIT.
3. Wait for 10 minutes until the DIC displays PRESS ENGINE START BUTTON TO LEARN, then press ENGINE START/STOP.

   The DIC will again display REMOTE LEARN PENDING, PLEASE WAIT.
4. Repeat Step 3 two additional times. After the third time all previously known transmitters will no longer work with the vehicle. Remaining transmitters can be relearned during the next steps.

   The DIC should now display READY FOR REMOTE # 1.

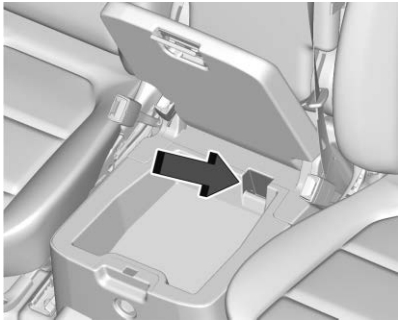

Transmitter Pocket without Bucket Seats

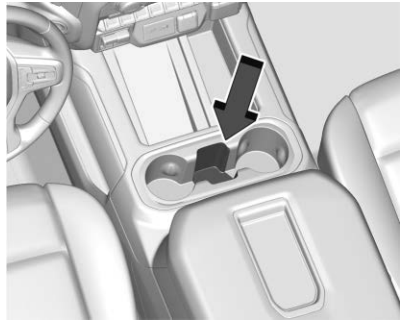

Transmitter Pocket with Bucket Seats

5. Place the new transmitter in the transmitter pocket/insert.
6. Press ENGINE START/STOP. When the transmitter is learned, the DIC display will show that it is ready to program the next transmitter.
7. Remove the transmitter from the transmitter pocket/insert and press 🔒 or 🔓 on the transmitter.

   To program additional transmitters, repeat Steps 5–7.

   When all additional transmitters are programmed, press and hold ENGINE START/STOP for approximately 12 seconds to exit programming mode.
8. Return the key back into the transmitter.

Starting the Vehicle with a Low Transmitter Battery

If the transmitter battery is weak or if there is interference with the signal, the DIC may display NO REMOTE DETECTED or NO REMOTE KEY WAS DETECTED PLACE KEY IN TRANSMITTER POCKET THEN START YOUR VEHICLE when starting the vehicle.

To start the vehicle:

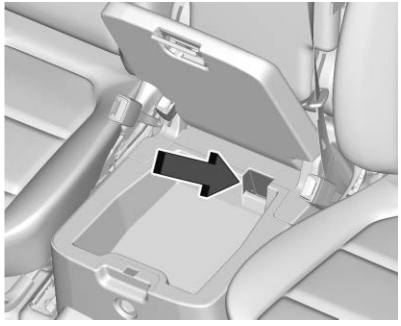

Transmitter Pocket without Bucket Seats

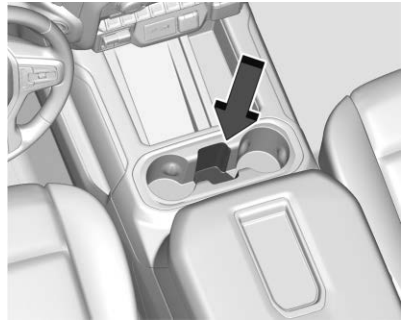

Transmitter Pocket with Bucket Seats

1. Place the transmitter in the transmitter pocket/insert.
2. With the vehicle in P (Park) or N (Neutral) press the brake pedal and ENGINE START/STOP.

   Replace the transmitter battery as soon as possible.

Battery Replacement

Replace the battery in the transmitter soon if the DIC displays REPLACE BATTERY IN REMOTE KEY.

Caution

When replacing the battery, do not touch any of the circuitry on the transmitter. Static from your body could damage the transmitter.

To replace the battery:

1. Press the button on the RKE transmitter to remove the key. Never pull the key out without pressing the button.

2. Insert a flat, thin object in the center of the transmitter to separate and remove the back cover.

3. Lift the battery with a flat object.
4. Remove the battery.
5. Insert the new battery, positive side toward the back cover. Replace with a CR2032 or equivalent battery.
6. Push together the transmitter.
7. Insert the key back into the RKE transmitter.

Remote Keyless Entry (RKE) System Operation (Key Access)

The RKE transmitter functions may work up to 60 m (197 ft) away from the vehicle.

Other conditions can affect the performance of the transmitter. See *Remote Keyless Entry (RKE) System* ⇨ *34*.

: Press and release , then immediately press and hold until the turn signal lamps flash or for at least four seconds. The engine may be started from outside the vehicle using the RKE transmitter. See *Remote Vehicle Start* ⇨ *44*.

: Press to lock all doors.

If enabled, the turn signal lamps may flash and/or the horn may sound on the second press to indicate locking has occurred.

If enabled, the horn chirps when is pressed again within three seconds. See *Vehicle Personalization* ⇨ *170*.

Pressing arms the alarm system. See *Vehicle Alarm System* ⇨ *55*.

If equipped with remote mirror folding, pressing and holding for one second will fold the mirrors, if enabled. See *Vehicle Personalization* ⇨ *170*.

: Press once to unlock only the driver door. If is pressed again within three seconds, all remaining doors unlock. The interior lamps

may come on and stay on for 20 seconds or until the ignition is turned on.

If enabled, the turn signal lamps flash twice to indicate unlocking has occurred. If enabled, the exterior lamps may turn on. See *Vehicle Personalization* ⇨ *170*.

Pressing 🔓 on the RKE transmitter disarms the alarm system. See *Vehicle Alarm System* ⇨ *55*.

If equipped with remote mirror folding, pressing and holding 🔓 for one second will unfold the mirrors, if enabled. See *Vehicle Personalization* ⇨ *170*.

Press and hold 🔓 to remotely open the windows, if enabled. See *Vehicle Personalization* ⇨ *170*.

x2 **:** Press twice quickly to release the tailgate, if equipped.

: Press and release to initiate the vehicle locator. The turn signal lamps flash and the horn sounds three times.

Press and hold for more than three seconds to activate the panic alarm. The turn signal lamps flash and the horn sounds repeatedly for 30 seconds. The alarm turns off when the ignition is turned on or is pressed again. The ignition must be off for the panic alarm to work.

Programming Transmitters to the Vehicle

Only RKE transmitters programmed to this vehicle will work. If a transmitter is lost or stolen, a replacement can be purchased and programmed through your dealer. Each vehicle can have up to eight transmitters programmed to it. See your dealer for transmitter programming.

Battery Replacement

Replace the battery in the transmitter soon if the REPLACE BATTERY IN REMOTE KEY displays in the Driver Information Center (DIC).

Caution

When replacing the battery, do not touch any of the circuitry on the transmitter. Static from your body could damage the transmitter.

To replace the battery:

1. Separate and remove the back cover of the transmitter with a flat, thin object, such as a coin.

2. Press and slide the battery down toward the pocket of the transmitter in the direction of the key ring. Do not use a metal object
3. Remove the battery.
4. Insert the new battery, positive side facing up. Replace with a CR2032 or equivalent battery.
5. Push together the transmitter back cover top side first, and then the bottom toward the key ring.

Remote Vehicle Start

If equipped with the remote start feature, the climate control system will come on when the vehicle is started remotely, depending on the outside temperature.

The rear defog and heated and ventilated seats, if equipped, may also come on. See *Heated and Ventilated Front Seats* ⇨ *76* and *Vehicle Personalization* ⇨ *170*.

If equipped, the automatic heated steering wheel may also come on. See *Heated Steering Wheel* ⇨ *133*.

Laws in some communities may restrict the use of remote starters. Check local regulations for any requirements on remote starting of vehicles.

Do not use remote start if the vehicle is low on fuel. The vehicle may run out of fuel.

The vehicle cannot be remote started if:

- The RKE transmitter is inside the vehicle.
- The hood is not closed.
- There is an emission control system malfunction and the lamp is on.
- The ignition is in any mode other than off.
- The hazard warning flashers are on.
- Two remote starts or a remote start with an extension have been used.
- The vehicle is not in P (Park).

The engine will turn off during a remote vehicle start if:

- The coolant temperature gets too high.
- The oil pressure gets low.

The RKE transmitter range may be reduced while the vehicle is running.

Other conditions can affect the performance of the transmitter. See *Remote Keyless Entry (RKE) System* ⇨ *34*.

Starting the Engine Using Remote Start

1. Press and release 🔒.
2. Immediately press and hold 🔁 until the turn signal lamps flash or for at least four seconds.

   When the vehicle starts, the parking lamps will turn on. The doors will be locked and the climate control system may come on.

   The engine will continue to run for 15 minutes. After 30 seconds, repeat Steps 1 and 2 for a 15-minute time extension.

Turn the ignition on to operate the vehicle.

Extending Engine Run Time

The engine run time can be extended by 15 minutes, for a total of 30 minutes, if during the first 15 minutes Steps 1 and 2 are repeated while the engine is still running. An extension can be requested 30 seconds after starting.

A maximum of two remote starts, or a single start with an extension, is allowed between ignition cycles.

The vehicle's ignition must be turned on and then back off to use remote start again.

Canceling a Remote Start

To cancel a remote start, do one of the following:

- Press and hold 🔁 until the parking lamps turn off.
- Turn on the hazard warning flashers.
- Turn the ignition on and then off.

Door Locks

⚠ Warning

Unlocked doors can be dangerous.

- Passengers, especially children, can easily open the doors and fall out of a moving vehicle. The doors

(Continued)

Warning (Continued)

can be unlocked and opened while the vehicle is moving. The chance of being thrown out of the vehicle in a crash is increased if the doors are not locked. So, all passengers should wear seat belts properly and the doors should be locked whenever the vehicle is driven.

- Young children who get into unlocked vehicles may be unable to get out. A child can be overcome by extreme heat and can suffer permanent injuries or even death from heat stroke. Always lock the vehicle whenever leaving it.
- Outsiders can easily enter through an unlocked door when you slow down or stop

(Continued)

Warning (Continued)

the vehicle. Locking the doors can help prevent this from happening.

There are several ways to lock and unlock the vehicle.

From outside:

- Use the Remote Keyless Entry (RKE) transmitter.
- Use Keyless Access, if equipped.
- Use the key in the driver door or the passenger door, if equipped.

From inside, use the power door locks or the manual door locks. To lock the door with the manual door locks, push down on the manual lock knob.

From inside, pull the door handle once to unlock the door. Pull the handle again to open the door.

See *Vehicle Alarm System* ⇨ *55*.

Free-Turning Locks

The door key lock cylinder turns freely when either the wrong key is used, or the correct key is not fully inserted. The free-turning door lock feature prevents the lock from being forced open. To reset the lock, turn it to the vertical position with the correct key fully inserted. Remove the key and insert it again. If this does not reset the lock, turn the key halfway around in the cylinder and repeat the reset procedure.

Power Door Locks

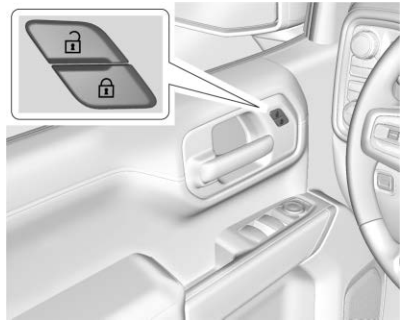

🔒 **:** Press to lock the doors.

🔓 **:** Press to unlock the doors.

Delayed Locking

If equipped, this feature delays the locking of the doors until five seconds after all doors are closed.

Delayed locking can only be turned on when the Open Door Anti-Lockout feature has been turned off.

When 🔒 is pressed on the power door lock switch while the door is open, a chime will sound three times indicating delayed locking is active.

The doors will lock automatically five seconds after all doors are closed. If a door is reopened before that time, the five-second timer will reset when all doors are closed again.

Press 🔒 on the door lock switch again or press 🔒 on the RKE transmitter to lock the doors immediately.

This feature can be programmed. See *Vehicle Personalization* ⇨ *170*.

Automatic Door Locks

The doors will lock automatically when all doors are closed, the ignition is on, and the vehicle is shifted out of P (Park).

If a vehicle door is unlocked, and then opened and closed, the doors will lock either when your foot is removed from the brake or the vehicle speed becomes faster than 13 km/h (8 mph).

To unlock the doors:

- Press 🔓 on the power door lock switch.
- Shift the transmission into P (Park).

Automatic door locking cannot be disabled. Automatic door unlocking can be programmed. See *Vehicle Personalization* ⇨ *170*.

Lockout Protection

If the ignition is on or in ACC/ACCESSORY and the power door lock switch is pressed with the driver door open, all the doors will lock and only the driver door will unlock.

If the vehicle is off and locking is requested while a door is open, when all doors are closed the vehicle will check for RKE transmitters inside. If an RKE transmitter is detected and the number of RKE transmitters inside has not reduced, the driver door will unlock and the horn will chirp three times.

Lockout Protection can be manually overridden with the driver door open by pressing and holding 🔒 on the power door lock switch.

Open Door Anti-Lockout

If Open Door Anti-Lockout is turned on and the vehicle is off, the driver door is open, and locking is requested, all the doors will lock and the driver door will unlock. Press the button again to lock the driver door. The Open Door Anti-Lockout feature can be turned on or off. See *Vehicle Personalization* ⇨ *170*.

Safety Locks

The rear door safety locks prevent passengers from opening the rear doors from inside the vehicle.

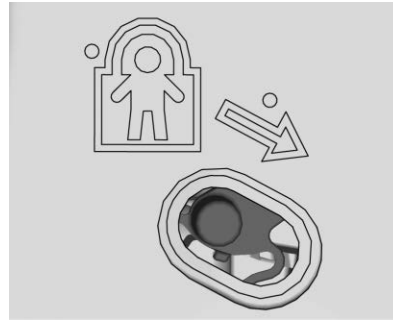

The safety lock is on the inside edge of the rear doors. To use the safety lock:

1. Move the lever down to the lock position.
2. Close the door.
3. Do the same for the other rear door.

To open a rear door when the safety lock is on:

1. Unlock the door by activating the inside handle, by pressing the power door unlock switch, or by using the Remote Keyless Entry (RKE) transmitter.
2. Open the door from the outside.

When the safety lock is enabled, adults and older children will not be able to open the rear door from the inside. Cancel the safety locks to enable the doors to open from the inside.

To cancel the safety lock:

1. Unlock the door and open it from the outside.
2. Move the lever up to unlock. Do the same for the other door.

Doors

Tailgate

Manual Tailgate

⚠ Warning

It is extremely dangerous to ride on the tailgate, even when the vehicle is operated at low speeds. People riding on the tailgate can easily lose their balance and fall in response to vehicle maneuvers. Falling from a moving vehicle may result in serious injuries or death. Do not allow people to ride on the tailgate. Be sure everyone in your vehicle is in a seat and using a seat belt properly.

Use the key to unlock the tailgate.

Open the tailgate by lifting up on its handle while pulling the tailgate down.

To shut the tailgate, firmly push it upward until it latches.

After closing the tailgate, pull it back to be sure it is latched securely.

Some tailgates have an electric latch. If the battery is disconnected or has low voltage, the tailgate will not open. The tailgate will resume operation when the battery is reconnected or recharged.

Power Release Tailgate

⚠ Warning

Make sure there is no one in the way of the power tailgate as it is opening and closing, and keep hands away from the tailgate hinges when in use. You or others could be injured if caught in the path of the power tailgate or tailgate hinges.

Caution

To avoid damage to the tailgate, make sure the area behind the tailgate is clear before opening it.

In the case of a dead battery, the tailgate can be opened manually. Contact your dealer or Roadside Assistance.

If equipped, to lock or unlock the tailgate, use the RKE transmitter or the key. See *Remote Keyless Entry (RKE) System Operation (Keyless Access)* ⇨ *34* or *Remote Keyless Entry (RKE) System Operation (Key Access)* ⇨ *42*.

The vehicle must be in P (Park).

To open the tailgate:

- Press x2 twice quickly on the RKE transmitter until the tailgate moves.

- Press on the center stack.

- Press the touch pad on the tailgate handle after unlocking all doors. Use the top of the tailgate to pull against if assistance is required. If equipped with Keyless Access, a locked tailgate can be opened if the RKE transmitter is within 1 m (3 ft).

To close the tailgate, firmly push it upward until it latches. Pull it back to be sure it is latched securely.

MultiPro Tailgate

⚠ Warning

Make sure there is no one in the way of the power tailgate as it is opening and closing, and keep hands away from the tailgate hinges when in use. You or others could be injured if caught in the path of the power tailgate or tailgate hinges.

Caution

To avoid damage to the tailgate, make sure the area behind the tailgate is clear before opening it.

If equipped with this feature, the vehicle must be in P (Park).

Switches in the inner tailgate prevent the primary tailgate from being opened when the inner tailgate is not fully closed.

To open the primary tailgate:

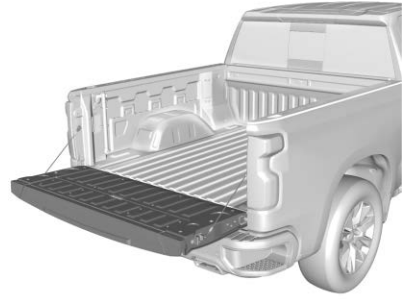

- Press x2 twice quickly on the RKE transmitter until the tailgate moves. See *Remote Keyless Entry (RKE) System Operation (Keyless Access)* ⇨ *34* or *Remote Keyless Entry (RKE) System Operation (Key Access)* ⇨ *42*. If equipped with Keyless Access, the tailgate can be opened if the RKE transmitter is within 1 m (3 ft).

- Press on the center stack.
- Press the lower touch pad on the tailgate handle after unlocking all doors. Use the top of the tailgate to pull against if assistance is required.

To close the primary tailgate, firmly push it upward until it latches. Pull it back to be sure it is latched securely.

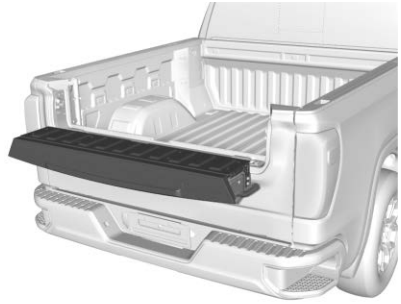

To open the inner tailgate, press the upper touch pad on the tailgate handle after unlocking all doors. Pull the top of the tailgate to open.

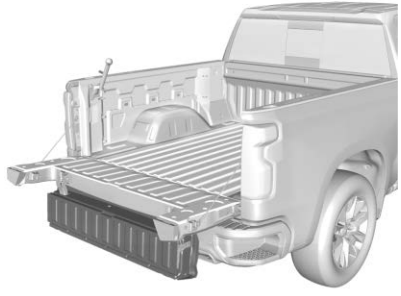

Caution

Do not open the inner tailgate with the primary tailgate open if there is a hitch ball or trailer attached. This may damage the tailgate.

To close the inner tailgate with the primary tailgate closed, firmly push or pull it upward until it latches. Pull it back to be sure it is latched securely.

To close the inner tailgate with the primary tailgate open:

- Hold the primary tailgate and firmly close the inner tailgate.
- Raise the inner tailgate so it meets the primary tailgate and close together at the same time.

When using the tailgate step as a load stop, the load must be secured as the load could shift. See *Cargo Tie-Downs* ⇨ *129*.

Tailgate Step

⚠ Warning

To avoid personal injury, keep hands away from the hinges when operating the tailgate step.

With the primary and inner tailgates open, the tailgate step can be lowered to access the pickup bed.

Using the Step

Caution

When using the tailgate as a step, the load rating is 170 kg (375 lb), which includes a person and cargo. Overloading the tailgate step can cause damage to the tailgate system.

- To lower the tailgate step, press the button at the center of the step. Make sure it lowers to the fully open position.
- To close the tailgate step, lift it firmly. Make sure that both side latches are engaged.

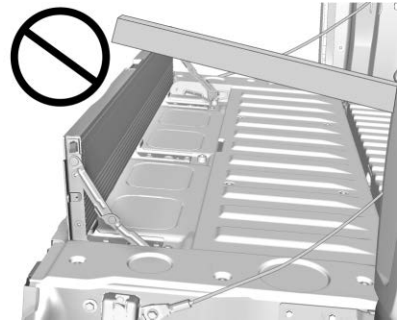

Do not place a load on top of the step when using it as a load stop.

Using the Assist Handle

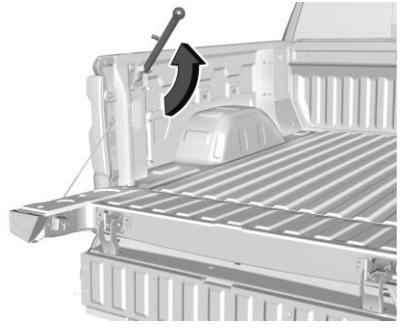

The assist handle helps with entering the pickup box. To use:

1. Lift up on the handle until it locks in the open position.
2. To return the assist handle, pull the release lever toward the ball end of the handle and push the handle back to the closed position.

Applying Loads to Tailgates

Caution
Do not put ramp loads on the inner tailgate alone. Damage to the inner tailgate may occur.

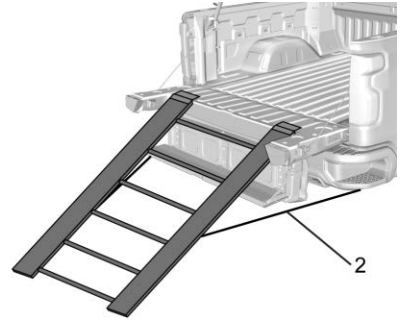

Preferred Method

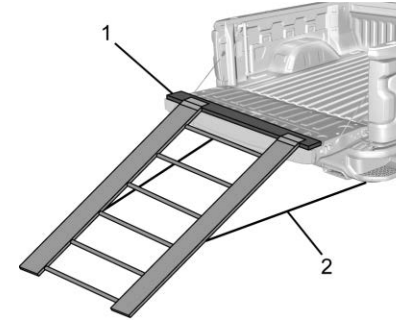

Alternate Method

When applying any load to the tailgate, distribute the weight evenly across the width of the tailgate. This applies to all tailgate types.

- Use a load-distributing member (1).
- Secure the ramp to the bumper (2).

Power Assist Steps

⚠ Warning

To avoid personal injury or property damage, before entering or exiting the vehicle, be sure the power assist step is fully extended. Do not step on the power assist step while it is moving. Never place hands or other body parts between the extended power assist step and the vehicle.

If equipped, the power assist steps, when enabled, will extend when the door is opened. They will retract three seconds after the door is closed or immediately if the vehicle starts moving.

Keep hands, children, pets, objects, and clothing clear of the power assist steps when in motion.

The steps will reverse direction if there is an obstruction. If possible, carefully remove the obstruction, then open and close the door on the same side to complete the motion. If the obstruction is not cleared, the assist steps remain extended.

Slight movement of the steps while extended is normal.

Kick Switch

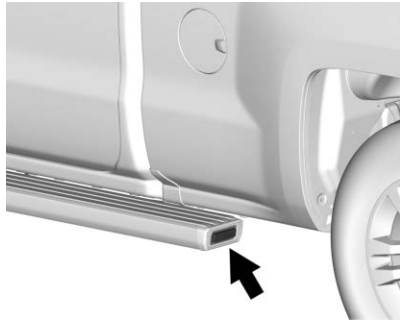

1. Place the vehicle in P (Park) and unlock the doors.
2. Kick the switch to extend the power assist step to the tire. A Driver Information Center (DIC) message displays.
3. Kick the switch again to return to normal operation.

Center Stack Switch

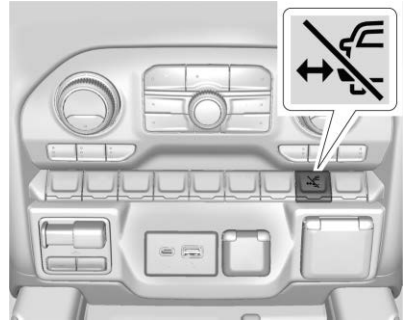

The power assist steps can be extended to the tire by pressing . When extending the steps with , the kick switch is disabled. The vehicle must be in P (Park) or N (Neutral).

To extend the steps:

- Press to extend both steps. A DIC message displays.
- Press again to extend to the tire. A DIC message displays.

- Press again to return to normal operation.

Enable/Disable

To enable or disable the power assist steps, press and hold for four seconds. A DIC message displays.

Cleaning

Clean the power assist steps regularly. For an automatic car wash, extend the steps while in N (Neutral) using the center stack switch. The steps will stow when shifting into D (Drive).

Vehicle Security

This vehicle has theft-deterrent features; however, they do not make the vehicle impossible to steal.

Vehicle Alarm System

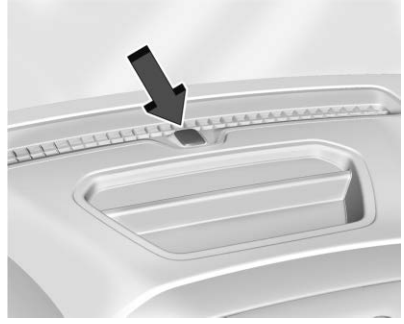

The indicator light, on the instrument panel near the windshield, indicates the status of the system.

Off : Alarm system is disarmed.

On Solid : Vehicle is secured during the delay to arm the system.

Fast Flash : Vehicle is unsecured. A door or the hood is open.

Slow Flash : Alarm system is armed.

Arming the Alarm System

1. Turn off the vehicle.
2. Lock the vehicle in one of two ways:
   - Use the RKE transmitter.
   - With a door open, press on the interior of the door.
3. After 30 seconds, the alarm system will arm and the indicator light will begin to slowly flash. Pressing on the RKE transmitter a second time will bypass the 30-second delay and immediately arm the alarm system.

The vehicle alarm system will not arm if the doors are locked with the key.

If the driver door is opened without first unlocking with the RKE transmitter, the horn will chirp and

the lights will flash to indicate pre-alarm. If the vehicle is not started, or the door is not unlocked by pressing 🔓 on the RKE transmitter during the 10-second pre-alarm, the alarm will be activated.

The alarm will also be activated if a passenger door or the hood is opened without first disarming the system. When the alarm is activated, the turn signals flash and the horn sounds for about 30 seconds. The alarm system will then re-arm to monitor for the next unauthorized event.

Disarming the Alarm System

To disarm the alarm system or turn off the alarm if it has been activated:

- Press 🔓 on the RKE transmitter.
- Start the vehicle.

To avoid setting off the alarm by mistake:

- Lock the vehicle after all occupants have exited.
- Always unlock a door with the RKE transmitter.

  Unlocking the driver door with the key will not disarm the system or turn off the alarm.

How to Detect a Tamper Condition

If 🔓 is pressed on the RKE transmitter and the horn chirps three times, an alarm occurred previously while the alarm system was armed.

If the alarm has been activated, a message will appear on the DIC.

Immobilizer

See *Radio Frequency Statement* ⇨ *447*.

Immobilizer Operation

This vehicle has a passive theft-deterrent system.

The system does not have to be manually armed or disarmed.

The vehicle is automatically immobilized when the vehicle is turned off.

The system is automatically disarmed when the ignition is turned from off to on.

The security light, in the instrument cluster, comes on if there is a problem with arming or disarming the theft-deterrent system.

When trying to start the vehicle, the security light comes on briefly when the ignition is turned on.

If the engine does not start and the security light stays on, there is a problem with the system. Turn the ignition off and try again.

If the vehicle will not change ignition modes (ACC/ACCESSORY, on, off), and the RKE transmitter appears to be undamaged, try another transmitter. Or, you may try placing

the transmitter in the transmitter pocket in the center console. See *Keys* ⇨ *31*.

If the ignition modes will not change with the other transmitter or in the transmitter pocket, your vehicle needs service. If the ignition does change modes, the first transmitter may be faulty. See your dealer who can service the theft-deterrent system and have a new RKE transmitter programmed to the vehicle.

It is possible for the immobilizer system to learn a new or replacement transmitter. Up to eight transmitters can be programmed for the vehicle. To program additional transmitters, see your dealer.

Do not leave the transmitter or device that disarms or deactivates the vehicle theft system in the vehicle.

When equipped with a key, if the engine still does not start, and the key appears to be undamaged, try another ignition key. It may be necessary to check the fuse. See *Fuses and Circuit Breakers* ⇨ *354*. If the engine still does not start with the other key, the vehicle needs service. If the vehicle does start, the first key may be faulty. See your dealer. It is possible for the immobilizer system to learn new or replacement keys. Up to eight keys can be programmed for the vehicle. To program additional keys, see *Keys* ⇨ *31*. Do not leave the key or device that disarms or deactivates the vehicle theft system in the vehicle.

See your dealer to get a new key blank cut exactly as the ignition key that operates the system.

Exterior Mirrors

Convex Mirrors

⚠ Warning

A convex mirror can make things, like other vehicles, look farther away than they really are. If you cut too sharply into the right lane, you could hit a vehicle on the right. Check the inside mirror or glance over your shoulder before changing lanes.

The passenger side mirror is convex shaped. A convex mirror's surface is curved so more can be seen from the driver seat.

Manual Mirrors

If equipped, adjust manual mirrors by moving the mirror up and down or left to right to see a little of the side of the vehicle and to have a clear view behind the vehicle.

Using hood-mounted air deflectors and add-on convex mirror attachments could decrease mirror performance.

Power Mirrors

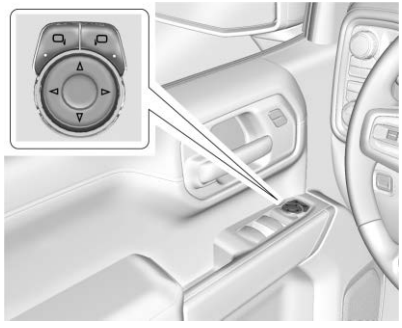

1. Select ⊡ or ⊡ for the driver or passenger side mirror. The switch will illuminate.
2. Press the arrows on the control pad to move the mirror up, down, right, or left.
3. Adjust each outside mirror so that a little of the vehicle and the area behind it can be seen.

The mirrors may be equipped with a memory function that works with the memory seats. See *Memory Seats* ⇨ *74*.

There may be cargo lamps on the bottom of the mirrors. See *Exterior Cargo Lamps* ⇨ *184*.

Folding Mirrors

Manual Folding

If equipped, push the mirror toward the vehicle to fold. Push the mirror outward to return to its original position.

Manually fold the mirrors inward to prevent damage when going through an automatic car wash.

Power Folding

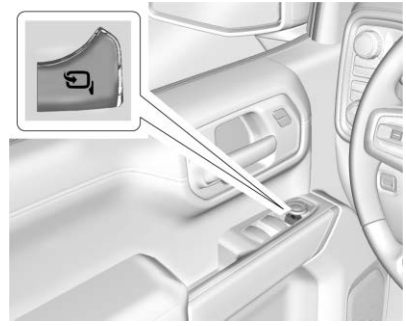

If equipped with power folding mirrors:

1. Press ⊡ to fold the mirrors in to the folded position.
2. Press ⊡ again to fold the mirrors out to the driving position.

Resetting the Power Folding Mirrors

Reset the power folding mirrors if:

- The mirrors are accidentally obstructed while folding.

- The mirrors are accidentally manually folded/unfolded.
- The mirrors will not stay in the unfolded position.
- The mirrors vibrate at normal driving speeds.

Manually fold both mirrors if they are out of sync. Fold and unfold the mirrors three times using the mirror controls to reset them to their normal position. A popping noise may be heard. This sound is normal after a manual folding operation.

Remote Folding Mirrors

If equipped, press and hold 🔒 on the RKE transmitter for approximately one second to remotely fold the exterior mirrors.

Press and hold 🔓 on the RKE transmitter for approximately one second to unfold. See *Remote Keyless Entry (RKE) System Operation (Keyless Access)* ⇨ *34* or *Remote Keyless Entry (RKE) System Operation (Key Access)* ⇨ *42*.

This feature can be turned on or off. See *Vehicle Personalization* ⇨ *170*.

Task Lighting

If equipped, task lighting projects light from the outside mirrors to the sides of the vehicle. See *Task Lighting* ⇨ *184*.

Advanced Trailering Vision System Side Cameras

If equipped, the Advanced Trailering Vision System side cameras are on the bottom of the outside mirrors. To locate for cleaning, see “Surround Vision (360 Degrees)” under *Assistance Systems for Parking or Backing* ⇨ *258*.

Lane Change Alert (LCA)

The vehicle may have LCA. See *Lane Change Alert (LCA)* ⇨ *271*.

Side Blind Zone Alert

The vehicle may have Side Blind Zone Alert. See *Side Blind Zone Alert (SBZA)* ⇨ *270*.

Heated Mirrors

If equipped with heated mirrors:

REAR : Press to heat the outside mirrors.

See “Rear Window Defogger” under *Dual Automatic Climate Control System* ⇨ *192*.

Automatic Dimming Mirror

If equipped, the driver outside mirror automatically adjusts for the glare of the headlamps from behind. This feature comes on when the vehicle is started.

Blind Spot Mirrors

If equipped, there is a small convex mirror built into the upper and outer corner of the driver outside mirror. It can show objects that may be in the vehicle's blind zone.

Driving with the Blind Spot Mirror

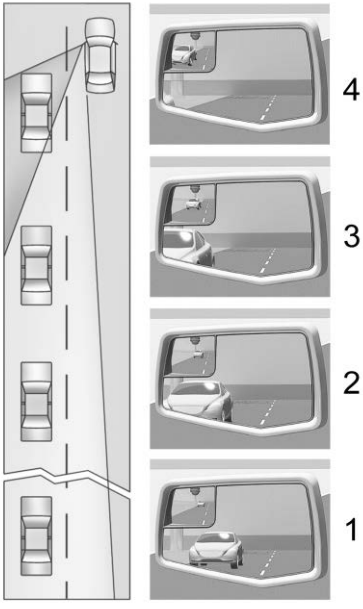

Actual Mirror View

1. When the approaching vehicle is a long distance away, the image in the main mirror is small and near the inboard edge of the mirror.
2. As the vehicle gets closer, the image in the main mirror gets larger and moves outboard.
3. As the vehicle enters the blind zone, the image transitions from the main mirror to the blind spot mirror.
4. When the vehicle is in the blind zone, the image only appears in the blind spot mirror.

Using the Outside Mirror with the Blind Spot Mirror

1. Set the main mirror so that the side of the vehicle can just be seen and the blind spot mirror has an unobstructed view.
2. When checking for traffic or before changing a lane, look at the main driver/passenger side mirror to observe traffic in the adjacent lane, behind your vehicle. Check the blind spot mirror for a vehicle in the blind zone. Then, glance over your shoulder to double check before moving slowly into the adjacent lane.

Reverse Tilt Mirrors

If equipped with memory seats, the passenger and/or driver mirror tilts to a preselected position when the vehicle is in R (Reverse). This allows the curb to be seen when parallel parking.

The mirror(s) return to the original position when:

- The vehicle is shifted out of R (Reverse), or remains in R (Reverse) for about 30 seconds.
- The ignition is turned off.
- The vehicle is driven in R (Reverse) above a set speed.

To turn this feature on or off, see *Vehicle Personalization* ⇨ *170*.

Interior Mirrors

Interior Rearview Mirrors

Adjust the rearview mirror for a clear view of the area behind your vehicle.

Do not spray glass cleaner directly on the mirror. Use a soft towel dampened with water.

Manual Rearview Mirror

If equipped, push the tab forward for daytime use and pull it rearward for nighttime use to avoid glare from the headlamps from behind.

Automatic Dimming Rearview Mirror

If equipped, the mirror will automatically reduce the glare of the headlamps from behind. The dimming feature comes on each time the vehicle is started.

Rear Camera Mirror

If equipped, this automatic dimming mirror provides a wide angle camera view of the area behind the vehicle.

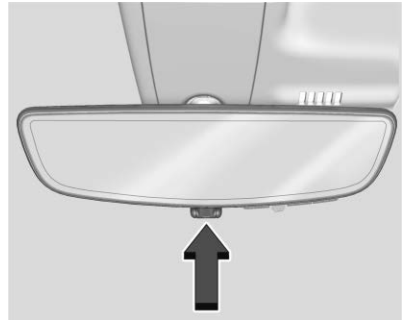

Pull the tab to turn on the display. Push the tab to turn it off. When off the mirror is automatic dimming. Adjust the mirror for a clear view of the area behind the vehicle while the display is off.

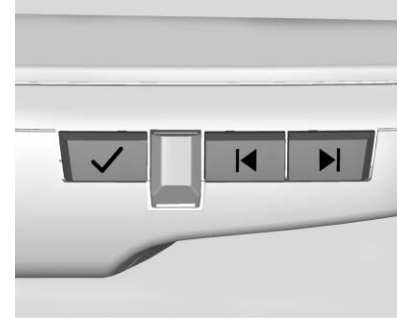

Press ✓ to scroll through the adjustment options.

Press |◀ and ▶| to adjust the settings using the indicators on the mirror. The indicators will remain visible for five seconds after the last button activation, and the settings will remain saved.

The adjustment options are:

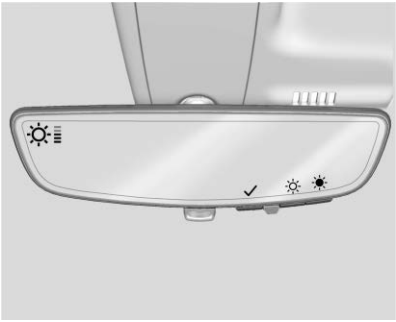

- Brightness

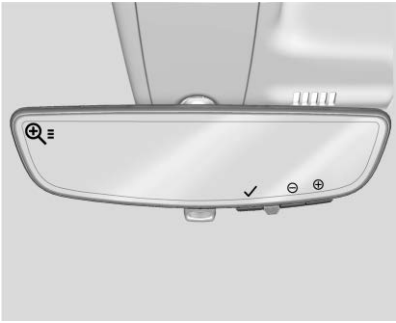

- Zoom

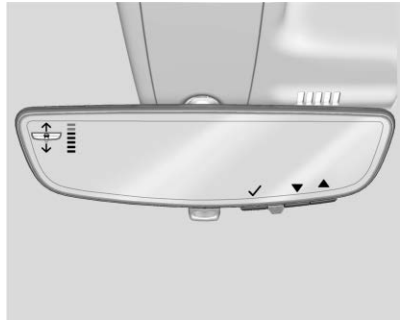

- Tilt

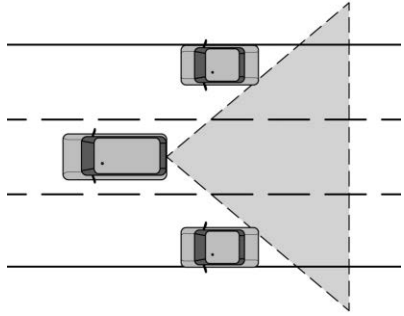

⚠ Warning

The Rear Camera Mirror (RCM) has a limited view. Portions of the road, vehicles, and other objects may not be seen. Do not drive or park the vehicle using only this camera. Objects may appear closer than they are. Check the outside mirrors or glance over your shoulder when making lane changes or merging. Failure to use proper care may result in injury, death, or vehicle damage.

Troubleshooting

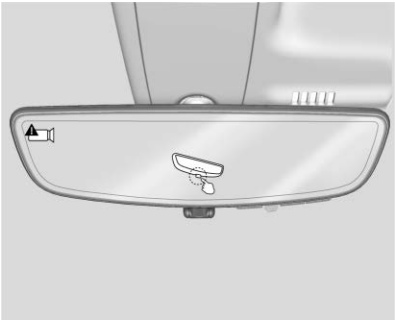

See your dealer for service if a blue screen and ⚠ are displayed in the mirror, and the display shuts off. Also, push the tab as indicated to return to the automatic dimming mode.

The Rear Camera Mirror may not work properly or display a clear image if:

- There is glare from the sun or headlamps. This may obstruct objects from view. If needed, push the tab to turn off the display.
- Dirt, snow, or other debris blocks the camera lens. Clean the lens with a soft damp cloth.
- The camera's mounting on the vehicle has been damaged, and/or the position or the mounting angle of the camera has changed.

Windows

⚠ Warning

Never leave a child, a helpless adult, or a pet alone in a vehicle, especially with the windows closed in warm or hot weather. They can be overcome by the extreme heat and suffer permanent injuries or even death from heat stroke.

The vehicle aerodynamics are designed to improve fuel economy performance. This may result in a pulsing sound when either rear window is down and the front windows are up. To reduce the sound, open either a front window or the sunroof, if equipped.

Manual Windows

If equipped, turn the hand crank on each door to manually raise or lower the manual windows.

Power Windows

⚠ Warning

Children could be seriously injured or killed if caught in the path of a closing window. Never leave the Remote Keyless Entry (RKE) transmitter or keys in a vehicle with children. When there are children in the rear seat, use the window lockout button to prevent operation of the windows. See *Keys* ⇨ *31*.

The power windows work when the ignition is on, in ACC/ACCESSORY, or when Retained Accessory Power (RAP) is active. See *Retained Accessory Power (RAP)* ⇨ *227*.

Using the window switch, press to open or pull to close the window.

The windows may be temporarily disabled if they are used repeatedly within a short time.

Window Lockout

With Power Folding Mirrors, Without Similar

This feature stops the rear door passenger window switches from working except from the driver position.

Press ⊠ to engage the rear window lockout feature. The indicator light is on when engaged.

Press ⊠ again to disengage.

Windows Express Movement

All windows can be opened without holding the window switch. Press the switch down fully and quickly release to express open the window.

If equipped, pull the window switch up fully and quickly release to express close the window.

Briefly press or pull the window switch in the same direction to stop that window's express movement.

Express Window Down

If equipped, this button will be on the center stack.

Press and hold to open all windows. Release to stop all movement.

Use the power window switches to close each window.

Window Automatic Reversal System

The express-close feature will reverse window movement if it comes in contact with an object. Extreme cold or ice could cause the window to auto-reverse. The window will operate normally after the object or condition is removed.

Automatic Reversal System Override

⚠ Warning

If automatic reversal system override is active, the window will not reverse automatically. You or others could be injured and the window could be damaged. Before using automatic reversal system override, make sure that all people and obstructions are clear of the window path.

When the engine is on, override the automatic reversal system by pulling and holding the window switch if conditions prevent it from closing.

Programming the Power Windows

Programming may be necessary if the vehicle battery has been disconnected or discharged. If the window is unable to express-up, program each express-close window:

1. Close all doors.
2. Turn the ignition on or to ACC/ACCESSORY.
3. Partially open the window to be programmed. Then close it and continue to pull the switch briefly after the window has fully closed.
4. Open the window and continue to press the switch briefly after the window has fully opened.

Remote Window Operation

If equipped, this feature allows the windows to be opened remotely. If enabled in vehicle personalization, press and hold on the RKE transmitter. See *Vehicle Personalization* ⇨ *170*.

Rear Windows

Power Sliding Rear Window

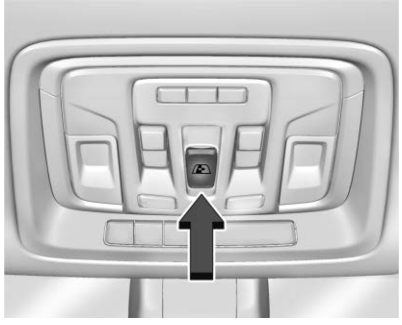

If equipped, the power sliding rear window works when the ignition has been turned on or to ACC/ACCESSORY, or Retained Accessory Power (RAP) must be active. See *Retained Accessory Power (RAP)* ⇨ *227*.

- Press the switch to open the window.
- Pull the switch to close the window.

The power sliding rear window cannot be operated manually.

Sun Visors

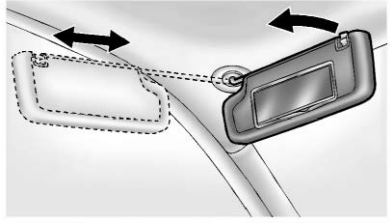

Pull the sun visor down to block glare. If equipped, detach the sun visor from the center mount to pivot to the side window or to extend along the rod.

If equipped, there is a lighted mirror on the sun visor. Lift the cover to open.

Roof

Sunroof

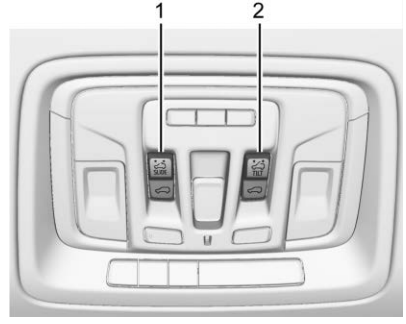

1. SLIDE Switch
2. TILT Switch

If equipped, the sunroof operates when the ignition is on or in ACC/ACCESSORY, or when Retained Accessory Power (RAP) is active. See *Retained Accessory Power (RAP)* ⇨ *227*.

Slide Switch

Express-Open/Express-Close : To express-open the sunroof, fully press and release SLIDE (1). Press and release SLIDE (1) again to stop the movement. To express-close the sunroof, fully press and release (1). Press and release (1) again to stop the movement.

Open/Close (Manual Mode) : To open the sunroof, press and hold SLIDE (1). Release SLIDE (1) to stop the movement. Press and hold (1) to close the sunroof. Release (1) to stop the movement.

Tilt Switch

Vent : From the closed position, press TILT (2) to vent the sunroof. Press (2) to close the vent.

When the sunroof is opened, an air deflector will automatically raise. The air deflector will retract when the sunroof is closed.

The sunroof also has a sunshade, which can be pulled forward to block sun rays. The sunshade must be opened and closed manually.

Automatic Reversal System

The sunroof has an automatic reversal system that is only active when the sunroof is operated in express-close mode.

If an object is in the path while express-closing, the reversal system will detect an object, stop, and open the sunroof again.

If frost or other conditions prevent closing, override the feature by closing the sunroof in manual mode. To stop movement, release (1).

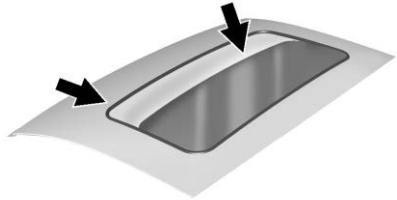

Dirt and debris may collect on the sunroof seal or in the track. This could cause an issue with sunroof operation or noise. It could also plug the water drainage system. Periodically open the sunroof and remove any obstacles or loose debris. Wipe the sunroof seal and roof sealing area using a clean cloth, mild soap, and water. Do not remove grease from the sunroof tracks.

If water is seen dripping into the water drainage system, this is normal.

Seats and Restraints

Head Restraints
Head Restraints 69

Front Seats
Seat Adjustment 70
Center Seat 71
Power Seat Adjustment 71
Lumbar Adjustment 72
Reclining Seatbacks 72
Memory Seats 74
Heated and Ventilated Front Seats 76

Rear Seats
Rear Seats 78
Heated Rear Seats 79

Seat Belts
Seat Belts 80
How to Wear Seat Belts Properly 81
Lap-Shoulder Belt 83
Seat Belt Use During Pregnancy 85
Seat Belt Extender 85
Safety System Check 85
Seat Belt Care 86
Replacing Seat Belt System Parts after a Crash 86

Airbag System
Airbag System 87
Where Are the Airbags? 89
When Should an Airbag Inflate? 90
What Makes an Airbag Inflate? 91
How Does an Airbag Restrain? 91
What Will You See after an Airbag Inflates? 92
Passenger Sensing System . . . 93
Servicing the Airbag-Equipped Vehicle 97
Adding Equipment to the Airbag-Equipped Vehicle 98
Airbag System Check 99
Replacing Airbag System Parts after a Crash 99

Child Restraints
Older Children 100
Infants and Young Children . . . 101
Child Restraint Systems 104
Where to Put the Restraint . . . 105
Lower Anchors and Tethers for Children (LATCH System) . . . 107
Replacing LATCH System Parts After a Crash 118
Securing Child Restraints (With the Seat Belt in the Rear Seat) 118
Securing Child Restraints (In the Center Front Seat) 122
Securing Child Restraints (With the Seat Belt in the Front Outboard Seat) 122

Head Restraints

⚠ Warning

With head restraints that are not installed and adjusted properly, there is a greater chance that occupants will suffer a neck/spinal injury in a crash. Do not drive until the head restraints for all occupants are installed and adjusted properly.

Front Seats

The vehicle's front seats have adjustable head restraints in the outboard seating positions.

Adjust the head restraint so that the top of the restraint is at the same height as the top of the occupant's head. This position reduces the chance of a neck injury in a crash.

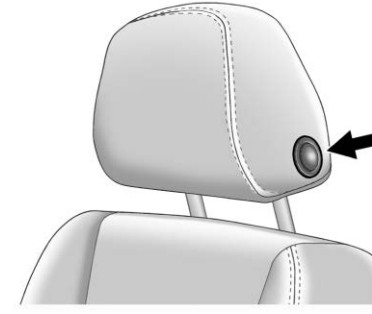

To raise or lower the head restraint, press the button on the side of the head restraint and pull up or push the head restraint down and release the button.

Pull and push on the head restraint after the button is released to make sure that it is locked in place.

The front seat outboard head restraints are not removable.

Rear Head Restraints

The vehicle’s rear seat has head restraints in the outboard seating positions that cannot be adjusted.

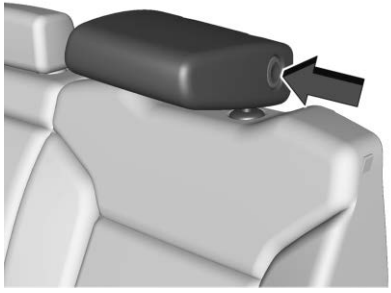

The head restraint can be folded forward to allow for better visibility when the rear seat is unoccupied. To fold the head restraint, press the button on the side of the head restraint.

When an occupant is in the seat, always return the head restraint to the upright position until it locks into place. Push and pull on the head restraint to make sure that it is locked.

If you are installing a child restraint in the rear seat, see *Lower Anchors and Tethers for Children (LATCH System)* ⇨ *107*.

Center Headrest

The vehicle's rear seat may be equipped with a headrest in the center seating position that cannot be adjusted.

If you are installing a child restraint in the rear seat, see *Lower Anchors and Tethers for Children (LATCH System)* ⇨ *107*.

Front Seats

Seat Adjustment

⚠ Warning

You can lose control of the vehicle if you try to adjust a driver seat while the vehicle is moving. Adjust the driver seat only when the vehicle is not moving.

To adjust a manual seat:

1. Pull the handle at the front of the seat.

2. Slide the seat to the desired position and release the handle.
3. Try to move the seat back and forth to be sure it is locked in place.

To adjust the seatback, see *Reclining Seatbacks* ⇨ *72*.

To adjust the lumbar support, if equipped, see *Lumbar Adjustment* ⇨ *72*.

Center Seat

If equipped, the center front seatback doubles as an armrest and cupholder/storage area for the driver and passenger when the center front seat is not used.

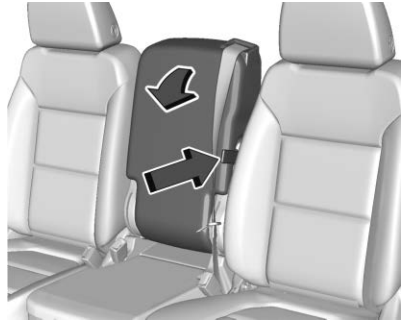

Pull the strap on the side of the center seatback to fold the center seatback. Do not use the center seatback as a seating position when the seatback is folded down.

To raise the seatback, push the seatback rearward until it locks in the upright position. Push and pull on the seatback to make sure it is locked.

Power Seat Adjustment

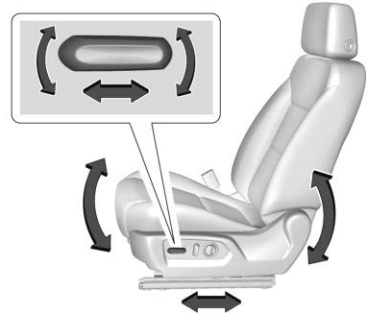

To adjust a power seat, if equipped:

- Move the seat forward or rearward by sliding the control forward or rearward.
- Raise or lower the front part of the seat cushion by moving the front of the control up or down.
- Raise or lower the seat by moving the rear of the control up or down.

To adjust the seatback, see *Reclining Seatbacks* ⇨ *72*.

To adjust the lumbar support, see *Lumbar Adjustment* ⇨ 72.

Some vehicles are equipped with a feature that activates a vibrating pulse alert in the driver seat to help the driver avoid crashes. See *Driver Assistance Systems* ⇨ 257.

Lumbar Adjustment

Power Lumbar

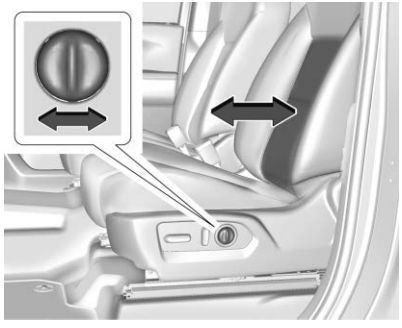

To adjust the lumbar support, if equipped:

- Press and hold the control forward to increase or rearward to decrease upper and lower lumbar support at the same time.

Reclining Seatbacks

⚠ Warning

Sitting in a reclined position when the vehicle is in motion can be dangerous. Even when buckled up, the seat belts cannot do their job.

The shoulder belt will not be against your body. Instead, it will be in front of you. In a crash, you could go into it, receiving neck or other injuries.

The lap belt could go up over your abdomen. The belt forces would be there, not at your pelvic bones. This could cause serious internal injuries.

(Continued)

Warning (Continued)

For proper protection when the vehicle is in motion, have the seatback upright. Then sit well back in the seat and wear the seat belt properly.

Do not have a seatback reclined if the vehicle is moving.

Manual Reclining Seatbacks

⚠ Warning

If either seatback is not locked, it could move forward in a sudden stop or crash. That could cause injury to the person sitting there. Always push and pull on the seatbacks to be sure they are locked.

To adjust a manual seatback:

1. Lift the lever.

   The seatback will automatically fold forward.
2. To recline, move the seatback rearward to the desired position, then release the lever to lock the seatback in place.
3. Push and pull on the seatback to make sure it is locked.

To return the seatback to the upright position:

1. Lift the lever fully without applying pressure to the seatback, and the seatback will return to the upright position.
2. Push and pull on the seatback to make sure it is locked.

Power Reclining Seatbacks

To recline a power seatback, if equipped:

- Tilt the top of the control rearward to recline.
- Tilt the top of the control forward to raise.

Memory Seats

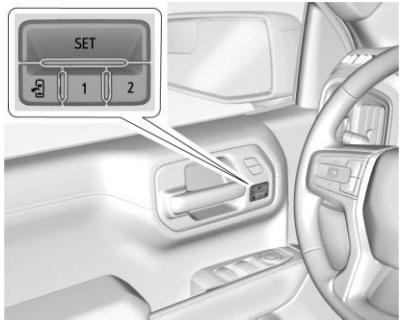

If equipped, memory seats allow two drivers to save and recall their unique seat positions for driving the vehicle, and a shared exit position for getting out of the vehicle. Other feature positions may also be saved, such as power mirrors, if equipped. Memory positions are linked to RKE transmitter 1 or 2 for automatic memory recalls.

Before saving, adjust all available memory feature positions. Turn the ignition on and then press and release SET; a beep will sound. Then immediately press and hold 1, 2, or (Exit) until two beeps sound. To manually recall these positions, press and hold 1, 2, or until the saved position is reached. Follow the instructions under "Saving Memory Positions."

The vehicle identifies the current driver's RKE transmitter number (1–8). See *Remote Keyless Entry (RKE) System Operation (Keyless Access)* ⇨ *34* or *Remote Keyless Entry (RKE) System Operation (Key Access)* ⇨ *42*. Only RKE transmitters 1 and 2 can be used for automatic memory recalls. A Driver Information Center (DIC) welcome message indicating the transmitter number may display for the first few ignition cycles following a transmitter change. For Seat Entry Memory to work properly, save the positions to the memory button (1 or 2) matching the RKE transmitter number displayed in the DIC welcome message. Carry the linked RKE transmitter when entering the vehicle.

Memory adjustments may not be available upon delivery or after service until steps in "Saving Memory Positions" section are performed.

Vehicle Personalization Settings

- To have the Seat Entry Memory movement begin when the vehicle is started, select the Settings menu, then Vehicle, then Seating Position, and then Seat Entry Memory. Select On or Off. See "Seat Entry Memory" later in this section.
- Seat Exit Memory movement begins when the ignition is turned off and the driver door is opened, or when the ignition is turned off with the driver door already opened, select the Settings menu, then Vehicle, then Seating Position, and then Seat Exit Memory. Select On or Off. See "Seat Exit Memory" later in this section.
- See *Vehicle Personalization* ⇨ *170* for additional setting information.

Identifying Driver Number

To identify the driver number:

1. Start the vehicle with a different key or RKE transmitter. The DIC should display the driver number; 1 or 2. Turn the ignition off and remove the key or RKE transmitter from the vehicle.
2. Start the vehicle with the initial key or RKE transmitter. The DIC should display the other driver number not shown in Step 1.

Saving Memory Positions

Read these instructions completely before saving memory positions.

To save preferred driving positions 1 and 2:

1. Turn the ignition on or to ACC/ACCESSORY.

   A DIC welcome message may indicate driver number 1 or 2.
2. Adjust all available memory features to the desired driving position.
3. Press and release SET; a beep will sound.
4. Immediately press and hold the 1 or 2 memory button matching the above DIC welcome message until two beeps sound.

   If too much time passes between releasing SET and pressing 1, the memory position will not be saved and two beeps will not sound. Repeat Steps 3 and 4.

   1 or 2 corresponds to the driver number. See “Identifying Driver Number” previously in this section.
5. Repeat Steps 1–4 for a second driver using 1 or 2.

To save the position for and Seat Exit Memory, repeat Steps 1–4 using . This saves the position for getting out of the vehicle.

Save preferred memory feature positions to both 1 and 2 if you are the only driver.

Manually Recalling Memory Positions

Press and hold 1, 2, or to recall the previously saved memory positions.

To stop Manual Memory Recall movement, release 1, 2, or or press any of the following controls:

- Power seat
- Memory SET
- Power mirror, with the driver or passenger outside mirror selected

Seat Entry Memory

The vehicle identifies the number of the current driver’s RKE transmitter (1–8). See *Remote Keyless Entry (RKE) System Operation (Keyless Access)* ⇨ *34* or *Remote Keyless Entry (RKE) System Operation (Key Access)* ⇨ *42*. If the RKE transmitter is 1 or 2, and Seat Entry Memory is programmed on in vehicle personalization, the positions saved to the same memory button number

1 or 2 are automatically recalled when the ignition is turned on, or turned from off to ACC/ ACCESSORY. RKE transmitters 3–8 will not provide automatic memory recalls.

To turn Seat Entry Memory on or off, see "Vehicle Personalization Settings" previously in this section and *Vehicle Personalization* ⇨ *170*.

The shift lever must be in P (Park) to start Seat Entry Memory. Seat Entry Memory will complete if the vehicle is shifted out of P (Park) prior to reaching the saved memory position.

To stop Seat Entry Memory movement, turn the ignition off or press any of the following controls:

- Power seat
- Memory SET, 1, 2, or
- Power mirror, with the driver or passenger outside mirror selected

If the saved memory seat position does not automatically recall or recalls to the wrong positions, the driver's RKE transmitter number (1 or 2) may not match the memory button number that positions were saved to. Try saving the position to the other memory button or try the other RKE transmitter.

Seat Exit Memory

Seat Exit Memory is not linked to an RKE transmitter. The position saved to is used for all drivers. To turn Seat Exit Memory on or off, see "Vehicle Personalization Settings" previously in this section and *Vehicle Personalization* ⇨ *170*.

If turned on, the position saved to is automatically recalled when one of the following occurs:

- The vehicle is turned off and the driver door is opened within a short time.
- The vehicle is turned off with the driver door open.

To stop Seat Exit Memory movement, press any of the following memory controls:

- Power seat
- Memory SET, 1, 2, or
- Power mirror, with the driver or passenger outside mirror selected

Obstructions

If something has blocked the driver seat while recalling a memory position, the recall may stop. Remove the obstruction and try the recall again. If the memory position still does not recall, see your dealer for service.

Heated and Ventilated Front Seats

⚠ Warning

If temperature change or pain to the skin cannot be felt, the seat heater may cause burns. To reduce the risk of burns, use care when using the seat heater, especially for long periods of time. Do not place anything on the seat that insulates against

(Continued)

Warning (Continued)

heat, such as a blanket, cushion, cover, or similar item. This may cause the seat heater to overheat. An overheated seat heater may cause a burn or may damage the seat.

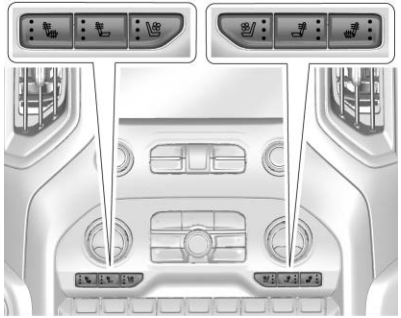

Heated and Ventilated Seat Buttons Shown, Heated Seat Buttons Similar

If equipped, the buttons are on the center stack. To operate, the engine must be running.

Press or to heat the driver or passenger seatback only.

Press or to heat the driver or passenger seat cushion and seatback.

Press or to ventilate the driver or passenger seat.

The indicator light on the button comes on when this feature is on.

Press the button once for the highest setting. With each press of the button, the seat will change to the next lower setting, and then to the off setting. The indicator lights next to the buttons indicate three for the highest setting and one for the lowest. If the heated seats are on high for an extended time, their level may automatically be lowered.

Remote Start Heated and Ventilated Seats

If equipped, the heated seats will turn on automatically during a remote start if it is cold outside and the ventilated seats will turn on automatically if it is hot outside.

If equipped, the heated steering wheel will turn on automatically during a remote start if it is cold outside. The heated and ventilated seat indicators and heated steering wheel indicator may not come on during this operation.

The heated and ventilated seats and heated steering wheel may cancel when the vehicle is started. These features can be manually selected after the ignition is turned on.

The temperature performance of an unoccupied seat may be reduced. This is normal.

The heated or ventilated seats will not turn on during a remote start unless they are enabled in vehicle personalization. See *Remote Vehicle Start* ⇨ *44* and *Vehicle Personalization* ⇨ *170*.

Rear Seats

Rear Seat Reminder

If equipped, the message REAR SEAT REMINDER LOOK IN REAR SEAT displays under certain conditions indicating there may be an item or passenger in the rear seat. Check before exiting the vehicle.

This feature will activate when a second row door is opened while the vehicle is on or up to 10 minutes before the vehicle is turned on. There will be an alert when the vehicle is turned off. The alert does not directly detect objects in the rear seat; instead, under certain conditions, it detects when a rear door is opened and closed, indicating that there may be something in the rear seat.

The feature is active only once each time the vehicle is turned on and off, and will require reactivation by opening and closing the second row doors. There may be an alert even when there is nothing in the rear seat; for example, if a child entered the vehicle through the rear door and left the vehicle without the vehicle being shut off.

The feature can be turned on or off. See *Vehicle Personalization* ⇨ *170*.

Folding the Rear Seat Cushion

Either side of the rear seat cushion can be folded up for added cargo space.

Caution

Folding a rear seat with the seat belts still fastened may cause damage to the seat or the seat belts. Always unbuckle the seat belts and return them to their normal stowed position before folding a rear seat.

Make sure that nothing is on the seat cushion.

To fold the seat, slowly pull the seat cushion up.

To return the seat to the normal seating position, slowly pull the seat cushion down.

⚠ Warning

A seat belt that is improperly routed, not properly attached, or twisted will not provide the protection needed in a crash. The person wearing the belt could be seriously injured. After raising the rear seatback, always check to be

(Continued)

Warning (Continued)

sure that the seat belts are properly routed and attached, and are not twisted.

Heated Rear Seats

⚠ Warning

If you cannot feel temperature change or pain to the skin, the seat heater may cause burns. See the Warning under *Heated and Ventilated Front Seats* ⇨ *76*.

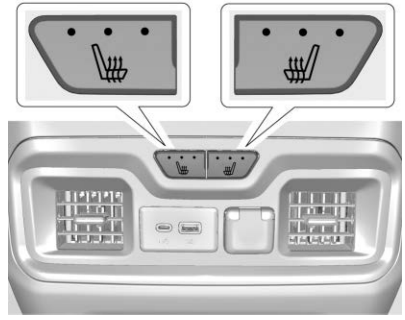

If available, the buttons are on the rear of the center console. To operate, the engine must be running.

Press ⊞ or ⊞ to heat the left or right outboard seat cushion. An indicator on the climate control display appears when this feature is on.

This feature turns on at the highest setting. With each press of the button, the heated seat changes to the next lower setting, and then the off setting. Three lights indicate the highest setting, and one light indicates the lowest. If the heated seats are on high, the level may automatically be lowered after approximately 30 minutes.

Seat Belts

This section describes how to use seat belts properly, and some things not to do.

⚠ Warning

Do not let anyone ride where a seat belt cannot be worn properly. In a crash, if you or your passenger(s) are not wearing seat belts, injuries can be much worse than if you are wearing seat belts. You can be seriously injured or killed by hitting things inside the vehicle harder or by being ejected from the vehicle. In addition, anyone who is not buckled up can strike other passengers in the vehicle.

It is extremely dangerous to ride in a cargo area, inside or outside of a vehicle. In a collision, passengers riding in these areas are more likely to be seriously injured or killed. Do not allow

(Continued)

Warning (Continued)

passengers to ride in any area of the vehicle that is not equipped with seats and seat belts.

Always wear a seat belt, and check that all passenger(s) are restrained properly too.

This vehicle has indicators as a reminder to buckle the seat belts. See *Seat Belt Reminders* ⇨ *149*.

Why Seat Belts Work

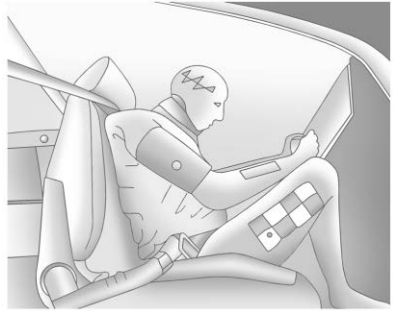

When riding in a vehicle, you travel as fast as the vehicle does. If the vehicle stops suddenly, you keep going until something stops you. It could be the windshield, the instrument panel, or the seat belts!

When you wear a seat belt, you and the vehicle slow down together. There is more time to stop because you stop over a longer distance and, when worn properly, your strongest bones take the forces from the seat belts. That is why wearing seat belts makes such good sense.

Questions and Answers About Seat Belts

Q: Will I be trapped in the vehicle after a crash if I am wearing a seat belt?

A: You *could* be — whether you are wearing a seat belt or not. Your chance of being conscious during and after a crash, so you *can* unbuckle and get out, is *much* greater if you are belted.

Q: If my vehicle has airbags, why should I have to wear seat belts?

A: Airbags are supplemental systems only. They work *with* seat belts — not instead of them. Whether or not an airbag is provided, all occupants still have to buckle up to get the most protection.

Also, in nearly all states and in all Canadian provinces, the law requires wearing seat belts.

How to Wear Seat Belts Properly

Follow these rules for everyone's protection.

There are additional things to know about seat belts and children, including smaller children and infants. If a child will be riding in the vehicle, see *Older Children* ⇨ *100* or *Infants and Young Children* ⇨ *101*. Review and follow the rules for children in addition to the following rules.

It is very important for all occupants to buckle up. Statistics show that unbelted people are hurt more often in crashes than those who are wearing seat belts.

There are important things to know about wearing a seat belt properly.

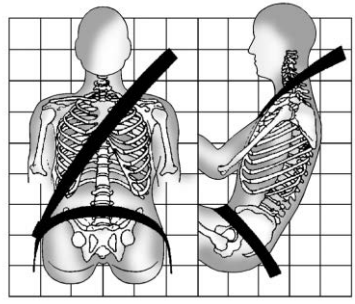

- Sit up straight and always keep your feet on the floor in front of you (if possible).
- Always use the correct buckle for your seating position.
- Wear the lap part of the belt low and snug on the hips, just touching the thighs. In a crash, this applies force to the strong pelvic bones and you would be less likely to slide under the lap belt. If you slid under it, the belt would apply force on your abdomen. This could cause serious or even fatal injuries.
- Wear the shoulder belt over the shoulder and across the chest. These parts of the body are best able to take belt restraining forces. The shoulder belt locks if there is a sudden stop or crash.

⚠ Warning

You can be seriously injured, or even killed, by not wearing your seat belt properly.

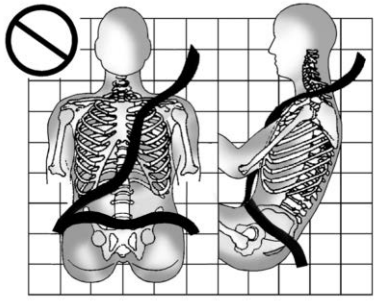

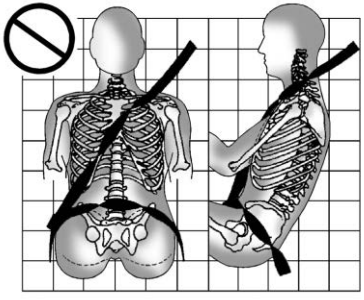

Never allow the lap or shoulder belt to become loose or twisted.

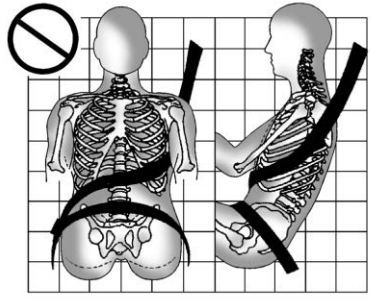

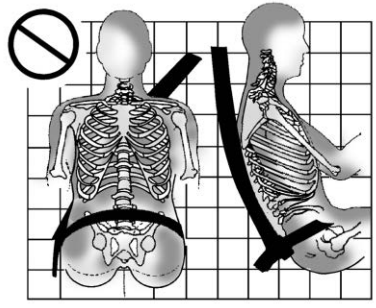

Never wear the shoulder belt under both arms or behind your back.

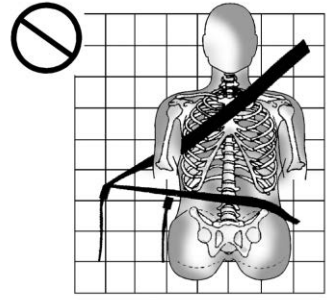

Always use the correct buckle for your seating position.

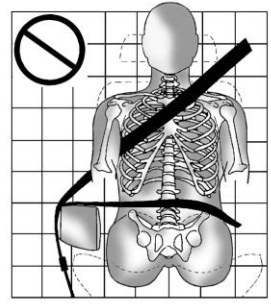

Never route the lap or shoulder belt over an armrest.

Lap-Shoulder Belt

All seating positions in the vehicle have a lap-shoulder belt.

The following instructions explain how to wear a lap-shoulder belt properly.

1. Adjust the seat, if the seat is adjustable, so you can sit up straight. To see how, see “Seats” in the Index.

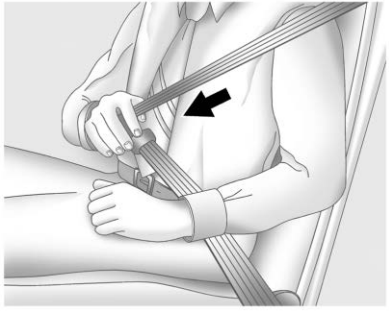

2. Pick up the latch plate and pull the belt across you. Do not let it get twisted.

The lap-shoulder belt may lock if you pull the belt across you very quickly. If this happens, let the belt go back slightly to unlock it. Then pull the belt across you more slowly.

If the shoulder portion of a passenger belt is pulled out all the way, the child restraint locking feature may be engaged. If this happens, let the belt go back all the way and start again.

Engaging the child restraint locking feature in the front outboard seating position may affect the passenger sensing system, if equipped. See *Passenger Sensing System* ⇨ *93*.

If the webbing locks in the latch plate before it reaches the buckle, tilt the latch plate flat to unlock.

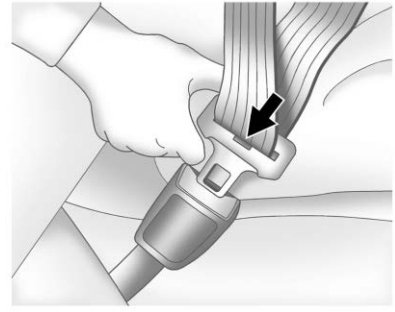

3. Push the latch plate into the buckle until it clicks.

   Pull up on the latch plate to make sure it is secure. If the belt is not long enough, see *Seat Belt Extender* ⇨ *85*.

   Position the release button on the buckle so that the seat belt could be quickly unbuckled if necessary.

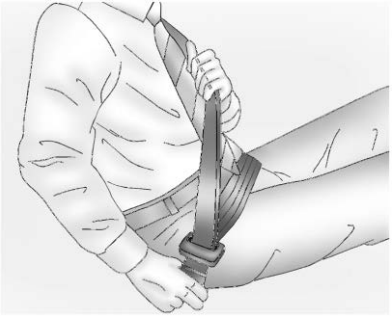

4. To make the lap part tight, pull up on the shoulder belt.

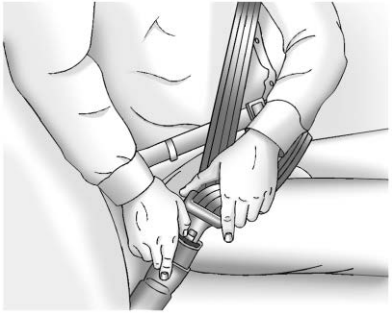

To unlatch the belt, push the button on the buckle. The belt should return to its stowed position.

Always stow the seat belt slowly. If the seat belt webbing returns quickly to the stowed position, the retractor may lock and cannot be pulled out. If this happens, pull the seat belt straight out firmly to unlock the webbing, and then release it. If the webbing is still locked in the retractor, see your dealer.

Before a door is closed, be sure the seat belt is out of the way. If a door is slammed against a seat belt, damage can occur to both the seat belt and the vehicle.

Seat Belt Pretensioners

This vehicle has seat belt pretensioners for front outboard occupants. Although the seat belt pretensioners cannot be seen, they are part of the seat belt assembly. They can help tighten the seat belts during the early stages of a moderate to severe frontal, near frontal, or rear crash if the threshold conditions for pretensioner activation are met. Seat belt pretensioners can also help tighten the seat belts in a side crash or rollover event.

Pretensioners work only once. If the pretensioners activate in a crash, the pretensioners and probably other parts of the vehicle's seat belt system will need to be replaced. See *Replacing Seat Belt System Parts after a Crash* ⇨ *86*.

Do not sit on the outboard seat belt while entering or exiting the vehicle or at any time while sitting in the seat. Sitting on the seat belt can damage the webbing and hardware.

Rear Seat Belt Comfort Guides

Rear seat belt comfort guides may provide added seat belt comfort for older children who have outgrown booster seats and for some adults. When installed on a shoulder belt, the comfort guide positions the shoulder belt away from the neck and head.

Comfort guides are available through your dealer for the rear outboard seating positions. Instructions are included with the guide.

Seat Belt Use During Pregnancy

Seat belts work for everyone, including pregnant women. Like all occupants, they are more likely to be seriously injured if they do not wear seat belts.

A pregnant woman should wear a lap-shoulder belt, and the lap portion should be worn as low as possible, below the rounding, throughout the pregnancy.

The best way to protect the fetus is to protect the mother. When a seat belt is worn properly, it is more likely that the fetus will not be hurt in a crash. For pregnant women, as for anyone, the key to making seat belts effective is wearing them properly.

Seat Belt Extender

If the vehicle's seat belt will fasten around you, you should use it.

But if a seat belt is not long enough, your dealer will order you an extender. When you go in to order it, take the heaviest coat you will wear, so the extender will be long enough for you. To help avoid personal injury, do not let someone else use it, and use it only for the seat it is made to fit. The extender has been designed for adults. Never use it for securing child restraints. For more information on the proper use and fit of seat belt extenders see the instruction sheet that comes with the extender.

Safety System Check

Periodically check the seat belt reminder, seat belts, buckles, latch plates, retractors, shoulder belt height adjusters (if equipped), and seat belt anchorages to make sure they are all in working order. Look for any other loose or damaged seat belt system parts that might keep a

seat belt system from performing properly. See your dealer to have it repaired. Torn, frayed, or twisted seat belts may not protect you in a crash. Torn or frayed seat belts can rip apart under impact forces. If a belt is torn or frayed, have it replaced immediately. If a belt is twisted, it may be possible to untwist by reversing the latch plate on the webbing. If the twist cannot be corrected, ask your dealer to fix it.

Make sure the seat belt reminder light is working. See *Seat Belt Reminders* ⇨ *149*.

Keep seat belts clean and dry. See *Seat Belt Care* ⇨ *86*.

Seat Belt Care

Keep belts clean and dry.

Seat belts should be properly cared for and maintained.

Seat belt hardware should be kept dry and free of dust or debris. As necessary, exterior hard surfaces and seat belt webbing may be lightly cleaned with mild soap and water. Ensure there is not excessive dust or debris in the mechanism. If dust or debris exists in the system please see the dealer. Parts may need to be replaced to ensure proper functionality of the system.

⚠ Warning

Do not bleach or dye seat belt webbing. It may severely weaken the webbing. In a crash, they might not be able to provide adequate protection. Clean and rinse seat belt webbing only with mild soap and lukewarm water. Allow the webbing to dry.

Replacing Seat Belt System Parts after a Crash

⚠ Warning

A crash can damage the seat belt system in the vehicle. A damaged seat belt system may not properly protect the person using it, resulting in serious injury or even death in a crash. To help make sure the seat belt systems are working properly after a crash, have them inspected and any necessary replacements made as soon as possible.

After a minor crash, replacement of seat belts may not be necessary. But the seat belt assemblies that were used during any crash may have been stressed or damaged. See your dealer to have the seat belt assemblies inspected or replaced.

New parts and repairs may be necessary even if the seat belt system was not being used at the time of the crash.

Have the seat belt pretensioners checked if the vehicle has been in a crash, or if the airbag readiness light stays on after you start the vehicle or while you are driving. See *Airbag Readiness Light* ⇨ *149*.

Airbag System

The vehicle has the following airbags:

- A frontal airbag for the driver
- A frontal airbag for the front outboard passenger
- A seat-mounted side impact airbag for the driver
- A seat-mounted side impact airbag for the front outboard passenger
- A roof-rail airbag for the driver and the passenger seated directly behind the driver
- A roof-rail airbag for the front outboard passenger and the passenger seated directly behind the front outboard passenger

All vehicle airbags have the word AIRBAG on the trim or on a label near the deployment opening.

For frontal airbags, the word AIRBAG is on the center of the steering wheel for the driver and on the instrument panel for the front outboard passenger.

For seat-mounted side impact airbags, the word AIRBAG is on the side of the seatback closest to the door.

For roof-rail airbags, the word AIRBAG is on the ceiling or trim.

Airbags are designed to supplement the protection provided by seat belts. Even though today's airbags are also designed to help reduce the risk of injury from the force of an inflating bag, all airbags must inflate very quickly to do their job.

Here are the most important things to know about the airbag system:

⚠ Warning

You can be severely injured or killed in a crash if you are not wearing your seat belt, even with

(Continued)

Warning (Continued)

airbags. Airbags are designed to work with seat belts, not replace them. Also, airbags are not designed to inflate in every crash. In some crashes seat belts are the only restraint. See *When Should an Airbag Inflate?* ⇨ *90*.

Wearing your seat belt during a crash helps reduce your chance of hitting things inside the vehicle or being ejected from it. Airbags are “supplemental restraints” to the seat belts. Everyone in the vehicle should wear a seat belt properly, whether or not there is an airbag for that person.

⚠ Warning

Because airbags inflate with great force and faster than the blink of an eye, anyone who is up against, or very close to, any

(Continued)

Warning (Continued)

airbag when it inflates can be seriously injured or killed. Do not sit unnecessarily close to any airbag, as you would be if sitting on the edge of the seat or leaning forward. Seat belts help keep you in position before and during a crash. Always wear a seat belt, even with airbags. The driver should sit as far back as possible while still maintaining control of the vehicle. The seat belts and the front outboard passenger airbags are most effective when you are sitting well back and upright in the seat with both feet on the floor.

Occupants should not lean on or sleep against the door or side windows in seating positions with seat-mounted side impact airbags and/or roof-rail airbags.

⚠ Warning

Children who are up against, or very close to, any airbag when it inflates can be seriously injured or killed. Always secure children properly in the vehicle. To read how, see *Older Children* ⇨ *100* or *Infants and Young Children* ⇨ *101*.

There is an airbag readiness light on the instrument cluster, which shows the airbag symbol.

The system checks the airbag electrical system for malfunctions. The light tells you if there is an electrical problem. See *Airbag Readiness Light* ⇨ *149*.

Where Are the Airbags?

The driver frontal airbag is in the center of the steering wheel.

The front outboard passenger frontal airbag is in the passenger side instrument panel.

Driver Side Shown, Passenger Side Similar

The driver and front outboard passenger seat-mounted side impact airbags are in the side of the seatbacks closest to the door.

Driver Side Crew Cab Shown, Passenger Side Double and Regular Cabs Similar

The roof-rail airbags for the driver, front outboard passenger, and second row outboard passengers are in the ceiling above the side windows.

⚠ Warning

If something is between an occupant and an airbag, the airbag might not inflate properly or it might force the object into

(Continued)

Warning (Continued)

that person causing severe injury or even death. The path of an inflating airbag must be kept clear. Do not put anything between an occupant and an airbag, and do not attach or put anything on the steering wheel hub or on or near any other airbag covering.

Do not use seat accessories that block the inflation path of a seat-mounted side impact airbag.

Never secure anything to the roof of a vehicle with roof-rail airbags by routing a rope or tie-down through any door or window opening. If you do, the path of an inflating roof-rail airbag will be blocked.

When Should an Airbag Inflate?

This vehicle is equipped with airbags. See *Airbag System* ⇨ *87*. Airbags are designed to inflate if the impact exceeds the specific airbag system's deployment threshold. Deployment thresholds are used to predict how severe a crash is likely to be in time for the airbags to inflate and help restrain the occupants. The vehicle has electronic sensors that help the airbag system determine the severity of the impact. Deployment thresholds can vary with specific vehicle design.

Frontal airbags are designed to inflate in moderate to severe frontal or near frontal crashes to help reduce the potential for severe injuries, mainly to the driver's or front outboard passenger's head and chest.

Whether the frontal airbags will or should inflate is not based primarily on how fast the vehicle is traveling.

It depends on what is hit, the direction of the impact, and how quickly the vehicle slows down.

Frontal airbags may inflate at different crash speeds depending on whether the vehicle hits an object straight on or at an angle, and whether the object is fixed or moving, rigid or deformable, narrow or wide.

Frontal airbags are not intended to inflate during vehicle rollovers, rear impacts, or many side impacts.

In addition, the vehicle has advanced technology frontal airbags. Advanced technology frontal airbags adjust the restraint according to crash severity.

Seat-mounted side impact airbags are designed to inflate in moderate to severe side crashes depending on the location of the impact. Seat-mounted side impact airbags are not designed to inflate in frontal impacts, near frontal impacts, rollovers, or rear impacts.

A seat-mounted side impact airbag is designed to inflate on the side of the vehicle that is struck.

Roof-rail airbags are designed to inflate in moderate to severe side crashes depending on the location of the impact. In addition, these roof-rail airbags are designed to inflate during a rollover or in a severe frontal impact. Roof-rail airbags are not designed to inflate in rear impacts. Both roof-rail airbags will inflate when either side of the vehicle is struck or if the sensing system predicts that the vehicle is about to roll over on its side, or in a severe frontal impact.

In any particular crash, no one can say whether an airbag should have inflated simply because of the vehicle damage or repair costs.

What Makes an Airbag Inflate?

In a deployment event, the sensing system sends an electrical signal triggering a release of gas from the inflator. Gas from the inflator fills the airbag causing the bag to break out of the cover. The inflator, the airbag, and related hardware are all part of the airbag module.

For airbag locations, see *Where Are the Airbags?* ⇨ *89*.

How Does an Airbag Restrain?

In moderate to severe frontal or near frontal collisions, even belted occupants can contact the steering wheel or the instrument panel. In moderate to severe side collisions, even belted occupants can contact the inside of the vehicle.

Airbags supplement the protection provided by seat belts by distributing the force of the impact more evenly over the occupant's body.

Rollover capable roof-rail airbags are designed to help contain the head and chest of occupants in the outboard seating positions in the first and second rows. The rollover capable roof-rail airbags are designed to help reduce the risk of

full or partial ejection in rollover events, although no system can prevent all such ejections.

But airbags would not help in many types of collisions, primarily because the occupant's motion is not toward those airbags. See *When Should an Airbag Inflate?* ⇨ *90*.

Airbags should never be regarded as anything more than a supplement to seat belts.

What Will You See after an Airbag Inflates?

After frontal and seat-mounted side impact airbags inflate, they quickly deflate, so quickly that some people may not even realize the airbags inflated. Roof-rail airbags may still be at least partially inflated for some time after they inflate. Some components of the airbag module may be hot for several minutes. For location of the airbags, see *Where Are the Airbags?* ⇨ *89*.

The parts of the airbag that come into contact with you may be warm, but not too hot to touch. There may be some smoke and dust coming from the vents in the deflated airbags. Airbag inflation does not prevent the driver from seeing out of the windshield or being able to steer the vehicle, nor does it prevent people from leaving the vehicle.

⚠ Warning

When an airbag inflates, there may be dust in the air. This dust could cause breathing problems for people with a history of asthma or other breathing trouble. To avoid this, everyone in the vehicle should get out as soon as it is safe to do so. If you have breathing problems but cannot get out of the vehicle after an airbag inflates, then get fresh air by opening a window or a door. If you experience breathing problems following an airbag deployment, you should seek medical attention.

The vehicle has a feature that may automatically unlock the doors, turn on the interior lamps and hazard warning flashers, and shut off the fuel system after the airbags inflate. The feature may also activate, without airbag inflation, after an event that exceeds a predetermined threshold. After turning the ignition off and then on again, the fuel system will return to normal operation; the doors can be locked, the interior lamps can be turned off, and the hazard warning flashers can be turned off using the controls for those features. If any of these systems are damaged in the crash they may not operate as normal.

⚠ Warning

A crash severe enough to inflate the airbags may have also damaged important functions in the vehicle, such as the fuel system, brake and steering systems, etc. Even if the vehicle appears to be drivable after a

(Continued)

Warning (Continued)

moderate crash, there may be concealed damage that could make it difficult to safely operate the vehicle.

Use caution if you should attempt to restart the engine after a crash has occurred.

In many crashes severe enough to inflate the airbag, windshields are broken by vehicle deformation. Additional windshield breakage may also occur from the front outboard passenger airbag.

- Airbags are designed to inflate only once. After an airbag inflates, you will need some new parts for the airbag system. If you do not get them, the airbag system will not be there to help protect you in another crash. A new system will include airbag modules and possibly other parts. The service manual for the vehicle covers the need to replace other parts.
- The vehicle has a crash sensing and diagnostic module which records information after a crash. See *Vehicle Data Recording and Privacy* ⇨ *449* and *Event Data Recorders* ⇨ *449*.
- Let only qualified technicians work on the airbag systems. Improper service can mean that an airbag system will not work properly. See your dealer for service.

Passenger Sensing System

The vehicle has a passenger sensing system for the front outboard passenger position. The passenger airbag status indicator will light on the overhead console when the vehicle is started.

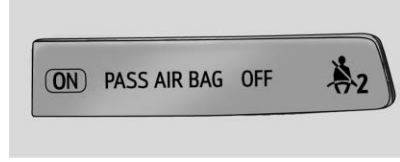

United States

Canada

The words ON and OFF, or the symbols for on and off, will be visible during the system check. When the system check is complete, either the word ON or OFF, or the symbol for on or off, will be visible. See *Passenger Airbag Status Indicator* ⇨ *150*.

The passenger sensing system turns off the front outboard passenger frontal airbag under certain conditions. No other airbag is affected by the passenger sensing system.

The passenger sensing system works with sensors that are part of the front outboard passenger seat and seat belt. The sensors are designed to detect the presence of a properly seated occupant and determine if the front outboard passenger frontal airbag should be allowed to inflate or not.

According to accident statistics, children are safer when properly secured in a rear seat in the correct child restraint for their weight and size.

Whenever possible, children aged 12 and under should be secured in a rear seating position.

Never put a rear-facing child seat in the front. This is because the risk to the rear-facing child is so great, if the airbag inflates.

⚠ Warning

A child in a rear-facing child restraint can be seriously injured or killed if the passenger frontal

(Continued)

Warning (Continued)

airbag inflates. This is because the back of the rear-facing child restraint would be very close to the inflating airbag. A child in a forward-facing child restraint can be seriously injured or killed if the passenger frontal airbag inflates and the passenger seat is in a forward position.

Even if the passenger sensing system has turned off the passenger frontal airbag, no system is fail-safe. No one can guarantee that an airbag will not deploy under some unusual circumstance, even though the airbag is turned off.

Never put a rear-facing child restraint in the front seat, even if the airbag is off. If securing a forward-facing child restraint in the front outboard passenger seat, always move the seat as far back as it will go. It is better to

(Continued)

Warning (Continued)

secure child restraints in the rear seat. Consider using another vehicle to transport the child when a rear seat is not available.

If the vehicle does not have a rear seat that will accommodate a rear-facing child restraint, a rear-facing child restraint should not be installed in the vehicle, even if the airbag is off.

The passenger sensing system is designed to turn off the front outboard passenger frontal airbag if:

- The front outboard passenger seat is unoccupied.
- The system determines an infant is present in a child restraint.
- A front outboard passenger takes his/her weight off of the seat for a period of time.
- There is a critical problem with the airbag system or the passenger sensing system.

When the passenger sensing system has turned off the front outboard passenger frontal airbag, the OFF indicator will light and stay lit as a reminder that the airbag is off. See *Passenger Airbag Status Indicator* ⇨ *150*.

The passenger sensing system is designed to turn on the front outboard passenger frontal airbag anytime the system senses that a person of adult size is sitting properly in the front outboard passenger seat.

When the passenger sensing system has allowed the airbag to be enabled, the ON indicator will light and stay lit as a reminder that the airbag is active.

For some children, including children in child restraints, and for very small adults, the passenger sensing system may or may not turn off the front outboard passenger frontal airbag, depending upon the person's seating posture and body build. Everyone in the vehicle who has outgrown child restraints should wear a seat belt properly — whether or not there is an airbag for that person.

⚠ Warning

If the airbag readiness light ever comes on and stays on, it means that something may be wrong with the airbag system. To help avoid injury to yourself or others, have the vehicle serviced right away. See *Airbag Readiness Light* ⇨ *149* for more information, including important safety information.

If the On Indicator Is Lit for a Child Restraint

The passenger sensing system is designed to turn off the front outboard passenger frontal airbag if the system determines that an infant is present in a child restraint. If a child restraint has been installed and the ON indicator is lit:

1. Turn the vehicle off.
2. Remove the child restraint from the vehicle.
3. Remove any additional items from the seat such as blankets, cushions, seat covers, seat heaters, or seat massagers.
4. Reinstall the child restraint following the directions provided by the child restraint manufacturer and refer to *Securing Child Restraints (With the Seat Belt in the Front Outboard Seat)* ⇨ *122* or *Securing Child Restraints (In the Center Front Seat)* ⇨ *122* or *Securing Child Restraints (With the Seat Belt in the Rear Seat)* ⇨ *118*.

   Make sure the seat belt retractor is locked by pulling the shoulder belt all the way out of the retractor when installing the child restraint, even if the child restraint is equipped with a seat belt lock off. When the retractor lock is set, the belt can be tightened but not pulled out of the retractor.

5. If, after reinstalling the child restraint and restarting the vehicle, the ON indicator is still lit, turn the vehicle off. Then slightly recline the vehicle seatback and adjust the seat cushion, if adjustable, to make sure that the vehicle seatback is not pushing the child restraint into the seat cushion.

   Also make sure the child restraint is not trapped under the vehicle head restraint. If this happens, adjust the head restraint. See *Head Restraints* ⇨ *69*.

6. Restart the vehicle.

The passenger sensing system may or may not turn off the airbag for a child in a child restraint depending upon the child's size. It is better to secure child restraints in the rear seat. Consider using another vehicle to transport the child when a rear seat is not available. Never put a rear-facing child restraint in the front seat, even if the ON indicator is not lit.

If the Off Indicator Is Lit for an Adult-Sized Occupant

If a person of adult size is sitting in the front outboard passenger seat, but the OFF indicator is lit, it could be because that person is not sitting properly in the seat or that the child restraint locking feature is engaged. Use the following steps to allow the system to detect that person and enable the front outboard passenger frontal airbag:

1. Turn the vehicle off.
2. Remove any additional material from the seat, such as blankets, cushions, seat covers, seat heaters, or seat massagers.
3. Place the seatback in the fully upright position.
4. Have the person sit upright in the seat, centered on the seat cushion, with legs comfortably extended.
5. If the shoulder portion of the belt is pulled out all the way, the child restraint locking feature will be engaged. This may unintentionally cause the passenger sensing system to turn the airbag off for some adult-sized occupants. If this happens, unbuckle the belt, let the belt go back all the way, and then buckle the belt again without pulling the belt out all the way.
6. Restart the vehicle and have the person remain in this position for two to three minutes after the ON indicator is lit.

⚠ Warning

If the front outboard passenger airbag is turned off for an adult-sized occupant, the airbag will not be able to inflate and help protect that person in a crash, resulting in an increased risk of serious injury or even death. An adult-sized occupant should not ride in the front outboard passenger seat, if the passenger airbag OFF indicator is lit.

Additional Factors Affecting System Operation

Seat belts help keep the passenger in position on the seat during vehicle maneuvers and braking, which helps the passenger sensing system maintain the passenger airbag status. See “Seat Belts” and “Child Restraints” in the Index for additional information about the importance of proper restraint use.

A thick layer of additional material, such as a blanket or cushion, or aftermarket equipment such as seat covers, seat heaters, and seat massagers can affect how well the passenger sensing system operates. We recommend that you not use seat covers or other aftermarket equipment except when approved by GM for your specific vehicle. See *Adding Equipment to the Airbag-Equipped Vehicle* ⇨ *98* for more information about modifications that can affect how the system operates.

The ON indicator may be lit if an object, such as a briefcase, handbag, grocery bag, laptop, or other electronic device, is put on an unoccupied seat. If this is not desired, remove the object from the seat.

⚠ Warning

Stowing articles under the passenger seat or between the passenger seat cushion and

(Continued)

Warning (Continued)

seatback may interfere with the proper operation of the passenger sensing system.

Servicing the Airbag-Equipped Vehicle

Airbags affect how the vehicle should be serviced. There are parts of the airbag system in several places around the vehicle. Your dealer and the service manual have information about servicing the vehicle and the airbag system. To purchase a service manual, see *Publication Ordering Information* ⇨ *446*.

⚠ Warning

For up to 10 seconds after the vehicle is turned off and the battery is disconnected, an airbag can still inflate during improper service. You can be injured if you

(Continued)

Warning (Continued)

are close to an airbag when it inflates. Avoid yellow connectors. They are probably part of the airbag system. Be sure to follow proper service procedures, and make sure the person performing work for you is qualified to do so.

Adding Equipment to the Airbag-Equipped Vehicle

Adding accessories that change the vehicle's frame, bumper system, height, front end, or side sheet metal, may keep the airbag system from working properly.

The operation of the airbag system can also be affected by changing, including improperly repairing or replacing, any parts of the following:

- Airbag system, including airbag modules, front or side impact sensors, sensing and diagnostic module, or airbag wiring
- Front seats, including stitching, seams, or zippers
- Seat belts
- Steering wheel, instrument panel, overhead console, ceiling trim, or pillar garnish trim
- Inner door seals, including speakers

Your dealer and the service manual have information about the location of the airbag modules and sensors, sensing and diagnostic module, and airbag wiring along with the proper replacement procedures.

In addition, the vehicle has a passenger sensing system for the front outboard passenger position, which includes sensors that are part of the passenger seat. The passenger sensing system may not operate properly if the original seat trim is replaced with non-GM covers, upholstery, or trim; or with GM covers, upholstery, or trim designed for a different vehicle. Any object, such as an aftermarket seat heater or a comfort-enhancing pad or device, installed under or on top of the seat fabric, could also interfere with the operation of the passenger sensing system. This could either prevent proper deployment of the passenger airbag(s) or prevent the passenger sensing system from properly turning off the passenger airbag(s). See *Passenger Sensing System* ⇨ *93*.

If the vehicle has rollover roof-rail airbags, see *Different Size Tires and Wheels* ⇨ *383* for additional important information.

If a snow plow is added to the vehicle, the airbags should still work properly. The airbag systems were designed to work properly under a wide range of conditions, including snow plowing with vehicles that have the optional snow plow prep package (RPO VYU). Do not change or defeat the snow plow's “tripping mechanism.” If you do, it can damage the snow plow and the vehicle, and may cause an airbag deployment.

If the vehicle must be modified because you have a disability and have questions about whether the modifications will affect the vehicle's airbag system, or if you have questions about whether the airbag system will be affected if the vehicle is modified for any other reason, call Customer Assistance. See *Customer Assistance Offices* ⇨ *439*.

Airbag System Check

The airbag system does not need regularly scheduled maintenance or replacement. Make sure the airbag readiness light is working. See *Airbag Readiness Light* ⇨ *149*.

Caution

If an airbag covering is damaged, opened, or broken, the airbag may not work properly. Do not open or break the airbag coverings. If there are any opened or broken airbag coverings, have the airbag

(Continued)

Caution (Continued)

covering and/or airbag module replaced. For the location of the airbags, see *Where Are the Airbags?* ⇨ *89*. See your dealer for service.

Replacing Airbag System Parts after a Crash

⚠ Warning

A crash can damage the airbag systems in the vehicle.
A damaged airbag system may not properly protect you and your passenger(s) in a crash, resulting in serious injury or even death. To help make sure the airbag systems are working properly after a crash, have them inspected and any necessary replacements made as soon as possible.

If an airbag inflates, you will need to replace airbag system parts. See your dealer for service.

If the airbag readiness light stays on after the vehicle is started or comes on when you are driving, the airbag system may not work properly. Have the vehicle serviced right away. See *Airbag Readiness Light* ⇨ *149*.

Child Restraints

Older Children

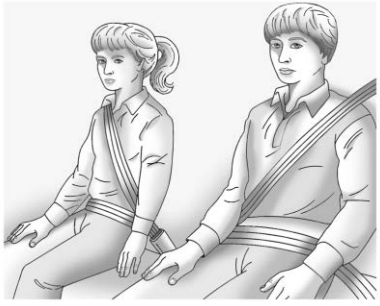

Older children who have outgrown booster seats should wear the vehicle's seat belts.

The manufacturer instructions that come with the booster seat state the weight and height limitations for that booster. Use a booster seat with a lap-shoulder belt until the child passes the fit test below:

- Sit all the way back on the seat. Do the knees bend at the seat edge? If yes, continue. If no, return to the booster seat.
- Buckle the lap-shoulder belt. Does the shoulder belt rest on the shoulder? If yes, continue. If no, try using the rear seat belt comfort guide, if available. See "Rear Seat Belt Comfort Guides" under *Lap-Shoulder Belt* ⇨ *83*. If a comfort guide is not available, or if the shoulder belt still does not rest on the shoulder, then return to the booster seat.
- Does the lap belt fit low and snug on the hips, touching the thighs? If yes, continue. If no, return to the booster seat.
- Can proper seat belt fit be maintained for the length of the trip? If yes, continue. If no, return to the booster seat.

Q: What is the proper way to wear seat belts?

A: An older child should wear a lap-shoulder belt and get the additional restraint a shoulder belt can provide. The shoulder belt should not cross the face or neck. The lap belt should fit snugly below the hips, just touching the top of the thighs. This applies belt force to the child's pelvic bones in a crash. It should never be worn over the abdomen, which could cause severe or even fatal internal injuries in a crash.

Also see "Rear Seat Belt Comfort Guides" under *Lap-Shoulder Belt* ⇨ *83*.

According to accident statistics, children are safer when properly restrained in a rear seating position.

In a crash, children who are not buckled up can strike other people who are buckled up, or can be thrown out of the vehicle. Older children need to use seat belts properly.

⚠ Warning

Never allow more than one child to wear the same seat belt. The seat belt cannot properly spread the impact forces. In a crash, they can be crushed together and seriously injured. A seat belt must be used by only one person at a time.

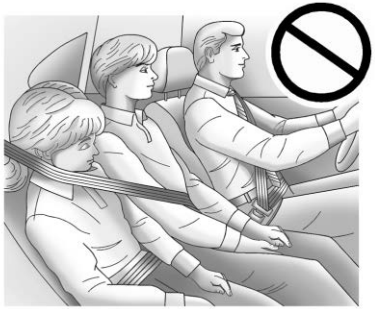

⚠ Warning

Never allow a child to wear the seat belt with the shoulder belt behind their back. A child can be seriously injured by not wearing the lap-shoulder belt properly. In a crash, the child would not be restrained by the shoulder belt. The child could move too far forward increasing the chance of head and neck injury. The child might also slide under the lap belt. The belt force would then be applied right on the abdomen. That could cause serious or fatal injuries. The shoulder belt should go over the shoulder and across the chest.

Infants and Young Children

Everyone in a vehicle needs protection! This includes infants and all other children. Neither the distance traveled nor the age and size of the traveler changes the need, for everyone, to use safety restraints. In fact, the law in every state in the United States and in every Canadian province says children up to some age must be restrained while in a vehicle.

⚠ Warning

Children can be seriously injured or strangled if a shoulder belt is wrapped around their neck. The shoulder belt can tighten but cannot be loosened if it is locked. The shoulder belt locks when it is pulled all the way out of the retractor. It unlocks when the shoulder belt is allowed to go all the way back into the retractor, but it cannot do this if it is wrapped around a child's neck. If the shoulder belt is locked and tightened around a child's neck, the only way to loosen the belt is to cut it.

Never leave children unattended in a vehicle and never allow children to play with the seat belts.

Every time infants and young children ride in vehicles, they should have the protection provided by appropriate child restraints. Neither the vehicle's seat belt system nor its airbag system is designed for them.

Children who are not restrained properly can strike other people, or can be thrown out of the vehicle.

⚠ Warning

Never hold an infant or a child while riding in a vehicle. Due to crash forces, an infant or a child will become so heavy it is not possible to hold it during a crash. For example, in a crash at only 40 km/h (25 mph), a 5.5 kg (12 lb) infant will suddenly become a 110 kg (240 lb) force on a person's arms. An infant or child should be secured in an appropriate restraint.

⚠ Warning

Children who are up against, or very close to, any airbag when it inflates can be seriously injured or killed. Never put a rear-facing child restraint in the front outboard seat. Secure a rear-facing child restraint in a rear seat. It is also better to secure a forward-facing child restraint in a rear seat. If you must secure a forward-facing child restraint in the front outboard seat, always move the front passenger seat as far back as it will go.

Child restraints are devices used to restrain, seat, or position children in the vehicle and are sometimes called child seats or car seats.

There are three basic types of child restraints:

- Forward-facing child restraints
- Rear-facing child restraints
- Belt-positioning booster seats

The proper child restraint for your child depends on their size, weight, and age, and also on whether the child restraint is compatible with the vehicle in which it will be used.

For each type of child restraint, there are many different models available. When purchasing a child restraint, be sure it is designed to be used in a motor vehicle. If it is, the restraint will have a label saying that it meets federal motor vehicle safety standards. The restraint manufacturer's instructions that come with the restraint state the weight and height limitations for a particular child restraint. In addition, there are many kinds of restraints available for children with special needs.

⚠ Warning

To reduce the risk of neck and head injury in a crash, infants and toddlers should be secured in a rear-facing child restraint until age two, or until they reach the maximum height and weight limits of their child restraint.

⚠ Warning

A young child's hip bones are still so small that the vehicle's regular seat belt may not remain low on the hip bones, as it should. Instead, it may settle up around the child's abdomen. In a crash, the belt would apply force on a body area that is unprotected by any bony structure. This alone could cause serious or fatal injuries. To reduce the risk of serious or fatal injuries during a crash, young children should always be secured in appropriate child restraints.

Child Restraint Systems

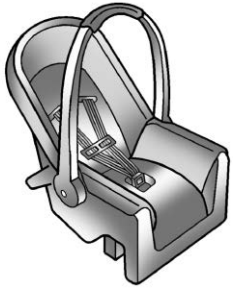

Rear-Facing Infant Restraint

A rear-facing child restraint provides restraint with the seating surface against the back of the infant.

The harness system holds the infant in place and, in a crash, acts to keep the infant positioned in the restraint.

Forward-Facing Child Restraint

A forward-facing child restraint provides restraint for the child's body with the harness.

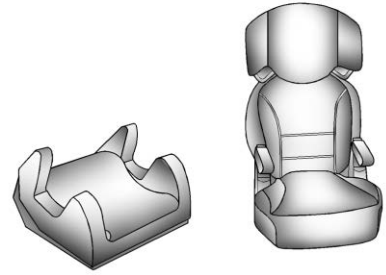

Booster Seats

A belt-positioning booster seat is used for children who have outgrown their forward-facing child restraint. Boosters are designed to improve the fit of the vehicle's seat belt system until the child is large enough for the vehicle seat belts to fit properly without a booster seat. See the seat belt fit test in *Older Children* ⇨ *100*.

Securing an Add-On Child Restraint in the Vehicle

⚠ Warning

A child can be seriously injured or killed in a crash if the child restraint is not properly secured in the vehicle. Secure the child restraint properly in the vehicle using the vehicle's seat belt or LATCH system, following the instructions that came with that child restraint and the instructions in this manual.

To help reduce the chance of injury, the child restraint must be secured in the vehicle. Child restraints must be secured in vehicle seats by lap belts or the lap belt portion of a lap-shoulder belt, or by the LATCH system. See *Lower Anchors and Tethers for Children (LATCH System)* ⇨ *107* for more information. Children can be endangered in a crash if the child restraint is not properly secured in the vehicle.

When securing an add-on child restraint, refer to the instructions that come with the restraint which may be on the restraint itself or in a booklet, or both, and to this manual. The child restraint instructions are important, so if they are not available, obtain a replacement copy from the manufacturer.

Keep in mind that an unsecured child restraint can move around in a collision or sudden stop and injure people in the vehicle. Be sure to properly secure any child restraint in the vehicle — even when no child is in it.

In some areas of the United States and Canada, Certified Child Passenger Safety Technicians (CPSTs) are available to inspect and demonstrate how to correctly use and install child restraints. In the U.S., refer to the National Highway Traffic Safety Administration (NHTSA) website to locate the nearest child safety seat inspection station. For CPST availability in Canada, check with Transport Canada or the Provincial Ministry of Transportation office.

Securing the Child Within the Child Restraint

⚠ Warning

A child can be seriously injured or killed in a crash if the child is not properly secured in the child restraint. Secure the child properly following the instructions that came with that child restraint.

Where to Put the Restraint

According to accident statistics, children and infants are safer when properly restrained in an appropriate child restraint secured in a rear seating position.

Whenever possible, children aged 12 and under should be secured in a rear seating position.

Never put a rear-facing child restraint in the front. This is because the risk to the rear-facing child is so great if the airbag deploys.

⚠ Warning

A child in a rear-facing child restraint can be seriously injured or killed if the front passenger airbag inflates. This is because the back of the rear-facing child restraint would be very close to the inflating airbag. A child in a forward-facing child restraint can be seriously injured or killed if the front passenger airbag inflates and the passenger seat is in a forward position.

Even if the passenger sensing system has turned off the front passenger frontal airbag, no system is fail-safe. No one can guarantee that an airbag will not deploy under some unusual circumstance, even though it is turned off.

(Continued)

Warning (Continued)

Secure rear-facing child restraints in a rear seat, even if the airbag is off. If you secure a forward-facing child restraint in the front seat, always move the front passenger seat as far back as it will go. It is better to secure the child restraint in a rear seat.

See *Passenger Sensing System* ⇨ *93* for additional information.

⚠ Warning

A child in a child restraint in the center front seat can be badly injured or killed by the frontal airbags if they inflate. Never secure a child restraint in the center front seat. It is always better to secure a child restraint in a rear seat.

Do not use child restraints in the center front seat position.

If the vehicle does not have a rear seat that will accommodate a rear-facing child restraint, a rear-facing child restraint should not be installed in the vehicle, even if the airbag is off.

When securing a child restraint with the seat belts in a rear seat position, study the instructions that came with the child restraint to make sure it is compatible with this vehicle.

Child restraints and booster seats vary considerably in size, and some may fit in certain seating positions better than others.

Depending on where you place the child restraint and the size of the child restraint, you may not be able to access adjacent seat belts or LATCH anchors for additional passengers or child restraints. Adjacent seating positions should not be used if the child restraint prevents access to or interferes with the routing of the seat belt.

Wherever a child restraint is installed, be sure to follow the instructions that came with the child restraint and secure the child restraint properly.

Keep in mind that an unsecured child restraint can move around in a collision or sudden stop and injure people in the vehicle. Be sure to properly secure any child restraint in the vehicle — even when no child is in it.

Lower Anchors and Tethers for Children (LATCH System)

The LATCH system secures a child restraint during driving or in a crash. LATCH attachments on the child restraint are used to attach the child restraint to the anchors in the vehicle. This system is designed to make installation of a child restraint easier.

In order to use the LATCH system in your vehicle, you need a child restraint that has LATCH attachments. LATCH-compatible rear-facing and forward-facing child seats can be properly installed using either the LATCH anchors or the vehicle's seat belts. Do not use both the seat belts and the LATCH anchorage system to secure a rear-facing or forward-facing child seat.

Booster seats use the vehicle's seat belts to secure the child and the booster seat. If the manufacturer recommends that the booster seat be secured with the LATCH system, this can be done as long as the booster seat can be positioned properly and there is no interference with the proper positioning of the lap-shoulder belt on the child.

Make sure to follow the instructions that came with the child restraint, and also the instructions in this manual.

When installing a child restraint with a top tether, you must also use either the lower anchors or the seat belts to properly secure the child restraint. A child restraint must never be installed using only the top tether and anchor.

The LATCH anchorage system can be used until the combined weight of the child plus the child restraint is 29.5 kg (65 lbs). Use the seat belt alone instead of the LATCH anchorage system once the combined weight is more than 29.5 kg (65 lbs).

See *Securing Child Restraints (With the Seat Belt in the Front Outboard Seat)* ⇨ *122* or *Securing Child Restraints (In the Center Front Seat)* ⇨ *122* or *Securing Child Restraints (With the Seat Belt in the Rear Seat)* ⇨ *118*.

Child restraints built after March 2014 will be labeled with the specific child weight up to which the LATCH system can be used to install the restraint.

The following explains how to attach a child restraint with these attachments in the vehicle.

Not all vehicle seating positions have lower anchors. In this case, the seat belt must be used (with top tether where available) to secure the child restraint. See *Securing Child Restraints (With the Seat Belt in the Front Outboard Seat)* ⇨ *122* or *Securing Child Restraints (In the Center Front Seat)* ⇨ *122* or *Securing Child Restraints (With the Seat Belt in the Rear Seat)* ⇨ *118*.

Lower Anchors

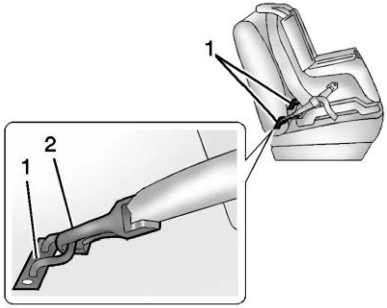

Lower anchors (1) are metal bars built into the vehicle. There are two lower anchors for each LATCH seating position that will accommodate a child restraint with lower attachments (2).

Top Tether Anchor

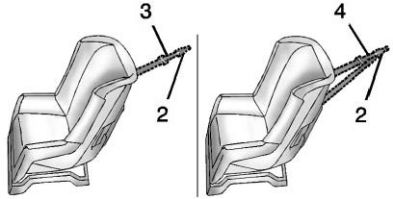

A top tether (3, 4) is used to secure the top of the child restraint to the vehicle. A top tether anchor is built into the vehicle. The top tether attachment hook (2) on the child restraint connects to the top tether anchor in the vehicle in order to reduce the forward movement and rotation of the child restraint during driving or in a crash.

The child restraint may have a single tether (3) or a dual tether (4). Either will have a single attachment hook (2) to secure the top tether to the anchor.

Some child restraints that have a top tether are designed for use with or without the top tether being attached. Others require the top tether always to be attached. In Canada, the law requires that forward-facing child restraints have a top tether, and that the tether be attached. Be sure to read and follow the instructions for your child restraint.

Lower Anchor and Top Tether Anchor Locations

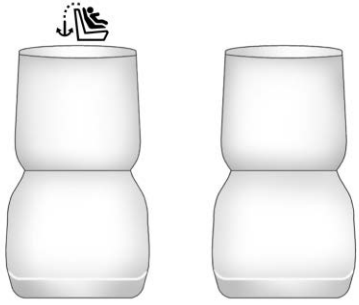

Regular Cab — Bucket Seat Only

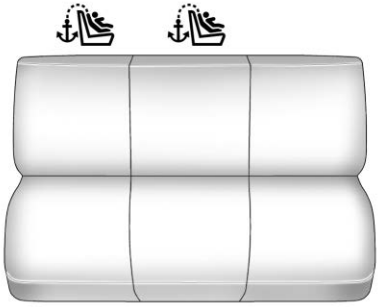

Regular Cab — Three-Passenger Front Seat

: Seating positions with top tether anchors.

Do not install a child restraint in the center front seating position. See *Securing Child Restraints (With the Seat Belt in the Front Outboard Seat)* ⇨ *122* or *Securing Child Restraints (In the Center Front Seat)* ⇨ *122* or *Securing Child Restraints (With the Seat Belt in the Rear Seat)* ⇨ *118* for more information.

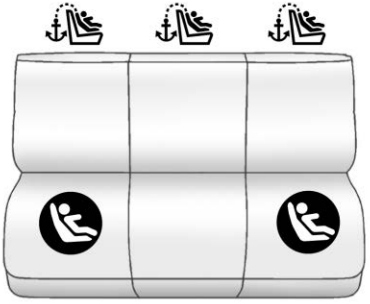

Double and Crew Cab Rear Seat

: Seating positions with top tether anchors.

: Seating positions with two lower anchors.

To assist in locating the lower anchors on double and crew cab models, each seating position with

lower anchors has two labels near the crease between the seatback and the seat cushion.

For regular cab models, there are top tether anchor symbols to assist you in locating the top tether anchors.

Do not install a child restraint in the center seating position. See *Securing Child Restraints (With the Seat Belt in the Front Outboard Seat)* ⇨ *122* or *Securing Child Restraints (In the Center Front Seat)* ⇨ *122* or *Securing Child Restraints (With the Seat Belt in the Rear Seat)* ⇨ *118* for more information.

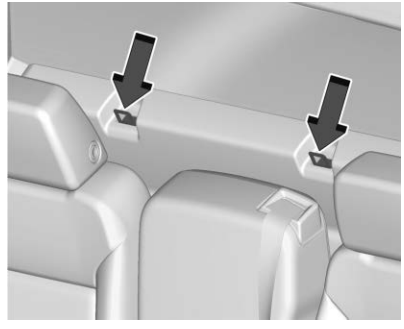

Regular Cab

For regular cab models, the top tether anchors are on the back panel behind the passenger seat. Be sure to use an anchor directly behind the seating position where the child restraint will be placed.

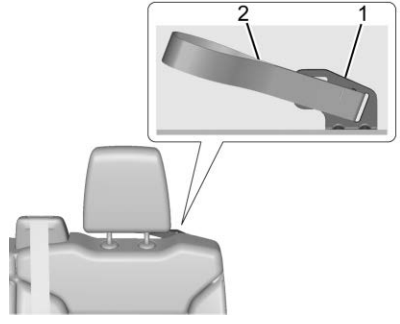

Driver Side Anchor and Loop (Double and Crew Cab)

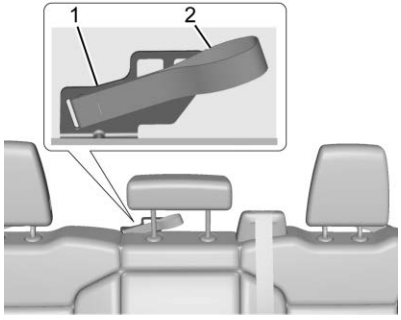

Center Anchor and Loop (Double and Crew Cab)

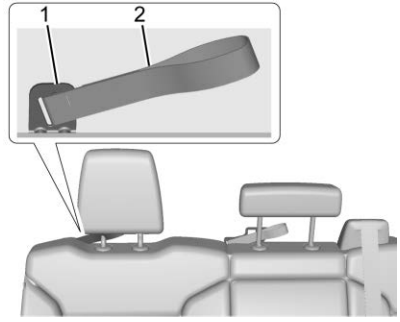

Passenger Side Loop (Double and Crew Cab)

For double and crew cab models, the top tether is routed through loops (2) to the top tether anchors (1). Be sure to use the correct anchor for the seating position where the child restraint will be placed.

Be sure to read the following instructions to properly install a child restraint using these loops and anchors.

Do not secure a child restraint in a position without a top tether anchor if a national or local law requires that the top tether be attached, or if the instructions that come with the child restraint say that the top tether must be attached.

According to accident statistics, children and infants are safer when properly restrained in a child restraint system or infant restraint system secured in a rear seating position. See *Where to Put the Restraint* ⇨ *105* for additional information.

Securing a Child Restraint Designed for the LATCH System

⚠ Warning

A child could be seriously injured or killed in a crash if the child restraint is not properly attached to the vehicle using either the LATCH anchors or the vehicle seat belt. Follow the instructions that came with the child restraint and the instructions in this manual.

⚠ Warning

Do not attach more than one child restraint to a single anchor, except for the center top tether anchors in the crew cab models. Attaching more than one child restraint to a single anchor could cause the anchor or attachment to come loose or even break during a crash. A child or others could be injured. To reduce the risk of serious or fatal injuries during a crash, attach only one child restraint per anchor.

⚠ Warning

Children can be seriously injured or strangled if a shoulder belt is wrapped around their neck. The shoulder belt can tighten but cannot be loosened if it is locked. The shoulder belt locks when it is pulled all the way out of the

(Continued)

Warning (Continued)

retractor. It unlocks when the shoulder belt is allowed to go all the way back into the retractor, but it cannot do this if it is wrapped around a child's neck. If the shoulder belt is locked and tightened around a child's neck, the only way to loosen the belt is to cut it.

Buckle any unused seat belts behind the child restraint so children cannot reach them. Pull the shoulder belt all the way out of the retractor to set the lock, and tighten the belt behind the child restraint after the child restraint has been installed.

Caution

Do not let the LATCH attachments rub against the vehicle's seat belts. This may

(Continued)

Caution (Continued)

damage these parts. If necessary, move buckled seat belts to avoid rubbing the LATCH attachments.

Do not fold the rear seat cushion when the seat is occupied. Do not fold the empty rear seat with a seat belt buckled. This could damage the seat belt or the seat. Unbuckle and return the seat belt to its stowed position, before folding the seat.

If you need to secure more than one child restraint in the rear seat, see *Where to Put the Restraint* ⇨ *105*.

Regular Cab Models

1. For models without a rear seat, forward-facing child restraints should only be installed in the right front seating position with belts and a top tether. See *Securing Child Restraints (With the Seat Belt in the Front Outboard Seat)* ⇨ *122* or *Securing Child Restraints (In the Center Front Seat)* ⇨ *122* or *Securing Child Restraints (With the Seat Belt in the Rear Seat)* ⇨ *118*.

   If the child restraint manufacturer recommends that the top tether be attached, attach and tighten the top tether to the top tether anchor, if your vehicle has one. Refer to the child restraint instructions and the following steps:

   1.1. Find the top tether anchor.

   1.2. Route, attach, and tighten the top tether according to your child restraint instructions and the following instructions:

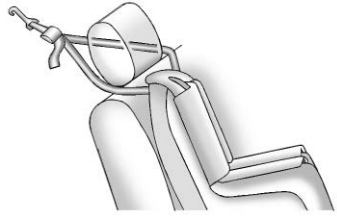

If the position you are using has an adjustable head restraint and you are using a dual tether, route the tether around the head restraint.

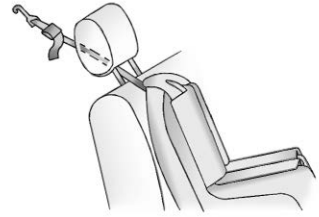

If the position you are using has an adjustable head restraint and you are using a single tether, raise the head restraint and route the tether under the head restraint and in between the head restraint posts.

2. Make sure the child restraint top tether hook is completely closed and secured to the top tether anchor.

3. Secure the child restraint in the right front seating position with the vehicle belts. See *Securing Child Restraints (With the Seat Belt in the Front Outboard Seat)* ⇨ *122* or *Securing Child Restraints (In the Center Front Seat)* ⇨ *122* or *Securing Child Restraints (With the Seat Belt in the Rear Seat)* ⇨ *118*.

4. Before placing a child in the child restraint, make sure it is securely held in place. To check, grasp the child restraint at the belt path and attempt to move it side to side and back and forth. There should be no more than 2.5 cm (1 in) of movement for proper installation.

Double and Crew Cab Models

1. Attach and tighten the lower attachments to the lower anchors. If the child restraint does not have lower attachments or the desired seating position does not have lower anchors, secure the child restraint with the top tether and the seat belts. Refer to the child restraint manufacturer instructions and the instructions in this manual.

   1.1. Find the lower anchors for the desired seating position.

   1.2. Put the child restraint on the seat.

   1.3. Attach and tighten the lower attachments on the child restraint to the lower anchors.

2. For forward-facing child restraints, attach and tighten the top tether to the top tether anchor, if your vehicle has one. Follow the child restraint instructions and the vehicle LATCH anchor weight limits described at the beginning of this section, and the following steps:

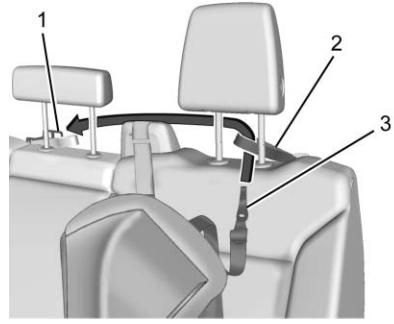

Rear Driver Side Position

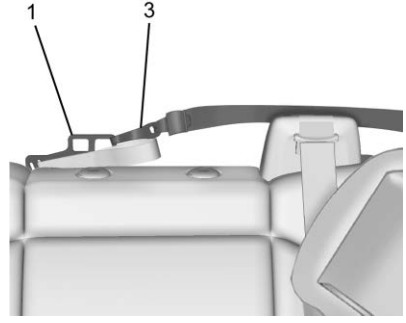

Rear Driver Side Position

2.1. For a top tether in the rear driver side position:

2.1.1. Remove the driver side head restraint and center headrest. See “Head Restraint or Headrest Removal and Reinstallation” later in this section.

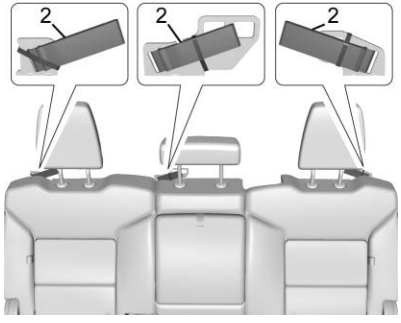

2.1.2. For first time use, remove and discard the rubber band from the top tether loop (2).

2.1.3. Route the top tether (3) through the loop (2).

2.1.4. Attach the top tether (3) to the driver side of the center top tether metal anchor (1).

2.1.5. Make sure the child restraint top tether hook is completely closed and secured to the top tether anchor.

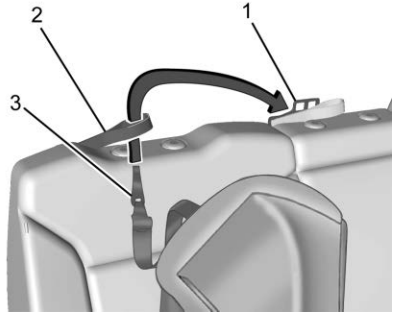

Rear Passenger Side Position

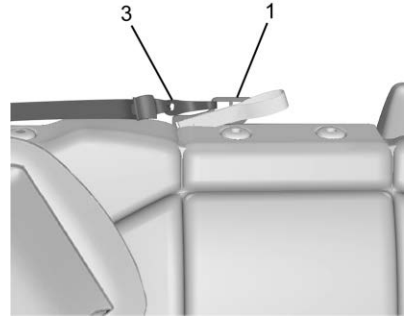

Rear Passenger Side Position

2.3. For a top tether in the rear passenger side position:

2.3.1. Remove the passenger side head restraint and center headrest. See “Head Restraint or Headrest Removal and Reinstallation” later in this section.

2.3.2. Route the top tether (3) through the loop (2).

2.3.3. Attach the top tether (3) to the passenger side of the center top tether metal anchor (1).

2.3.4. Make sure the child restraint top tether hook is completely closed and secured to the top tether anchor.

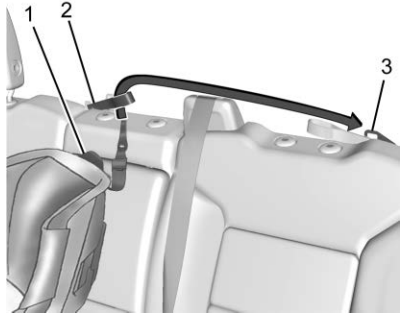

Rear Center Position

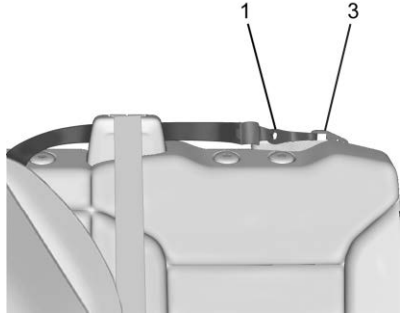

Rear Center Position

2.4. For a top tether in the rear center position:

2.4.1. Remove the driver side head restraint and center headrest. See “Head Restraint or Headrest Removal and Reinstallation” later in this section.

2.4.2. Route the top tether (1) through the center loop (2).

2.4.3. Attach the top tether (1) to the driver side top tether metal anchor (3).

2.4.4. Make sure the child restraint top tether hook is completely closed and secured to the top tether anchor.

3. Tighten the top tether per the child restraint manufacturer's instructions.

When the top tether is properly tightened, the loop may bend. This is normal and will not damage the vehicle.

If child restraints are installed in both outboard positions, both top tethers can be attached to the center anchor. Top tethers can be attached for child restraints in all three rear seating positions at the same time, following the routing instructions above.

4. Before placing a child in the child restraint, make sure it is securely held in place. To check, grasp the child restraint at the LATCH path and attempt to move it side to side and back and forth. There should be no more than 2.5 cm (1 in) of movement for proper installation.

Head Restraint or Headrest Removal and Reinstallation

The second row outboard head restraints or center headrest can be removed if they interfere with the proper installation of the child restraint.

To remove the second row head restraints or center headrest:

1. Press both buttons on the head restraint or headrest posts at the same time, and pull up on the head restraint or headrest.
2. Store the head restraint or headrest in a secure place.
3. When the child restraint is removed, reinstall the head restraint or headrest before the seating position is used.

⚠ Warning

With head restraints that are not installed and adjusted properly, there is a greater chance that occupants will suffer a neck/spinal injury in a crash. Do not drive until the head restraints for all occupants are installed and adjusted properly.

To reinstall the head restraint or headrest:

1. Insert the head restraint or headrest posts into the holes in the top of the seatback. The notches on the posts must face the driver side of the vehicle.
2. Push the head restraint or headrest down.
3. Try to move the head restraint or headrest to make sure that it is locked in place.

Replacing LATCH System Parts After a Crash

⚠ Warning

A crash can damage the LATCH system in the vehicle. A damaged LATCH system may not properly secure the child restraint, resulting in serious injury or even death in a crash. To help make sure the LATCH system is working properly after a crash, see your dealer to have the system inspected and any necessary replacements made as soon as possible.

If the vehicle has the LATCH system and it was being used during a crash, new LATCH system parts may be needed.

New parts and repairs may be necessary even if the LATCH system was not being used at the time of the crash.

Securing Child Restraints (With the Seat Belt in the Rear Seat)

When securing a child restraint with the seat belts in a rear seat position, study the instructions that came with the child restraint to make sure it is compatible with this vehicle.

If the child restraint has the LATCH system, see *Lower Anchors and Tethers for Children (LATCH System)* ⇨ *107* for how and where to install the child restraint using LATCH. If a child restraint is secured in the vehicle using a seat belt and it uses a top tether, see *Lower Anchors and Tethers for Children (LATCH System)* ⇨ *107* for top tether anchor locations.

Do not secure a child seat in a position without a top tether anchor if a national or local law requires that the top tether be anchored, or if the instructions that come with the child restraint say that the top tether must be anchored.

In Canada, the law requires that forward-facing child restraints have a top tether, and that the tether be attached.

If the child restraint or vehicle seat position does not have the LATCH system, you will be using the seat belt to secure the child restraint. Be sure to follow the instructions that came with the child restraint.

If more than one child restraint needs to be installed in the rear seat, be sure to read *Where to Put the Restraint* ⇨ *105*.

Double Cab

1. Remove the head restraint or headrest prior to installing a forward-facing child restraint in an outboard rear seating position. See “Head Restraint or Headrest Removal and Reinstallation” under *Lower Anchors and Tethers for Children (LATCH System)* ⇨ *107*.
2. Put the child restraint on the seat.
3. Pick up the latch plate, and run the lap and shoulder portions of the vehicle's seat belt through or around the child restraint. The child restraint instructions will show you how.

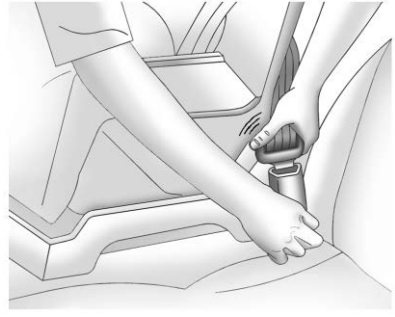

4. Push the latch plate into the buckle until it clicks.

   Position the release button on the buckle, away from the child restraint, so that the seat belt could be quickly unbuckled if necessary.

5. Pull the shoulder belt all the way out of the retractor to set the lock. When the retractor lock is set, the belt can be tightened but not pulled out of the retractor.

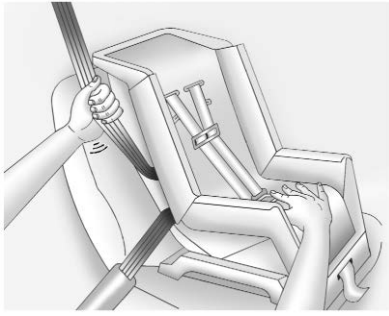

6. To tighten the belt, push down on the child restraint, pull the shoulder portion of the belt to tighten the lap portion of the belt, and feed the shoulder belt back into the retractor. When installing a forward-facing child restraint, it may be helpful to use your knee to push down on the child restraint as you tighten the belt.

   Try to pull the belt out of the retractor to make sure the retractor is locked. If the retractor is not locked, repeat Steps 5 and 6.

7. For forward-facing child restraints, attach and tighten the top tether to the top tether anchor (loop). Refer to the child restraint instructions, the vehicle LATCH anchor weight limits, and instructions listed in *Lower Anchors and Tethers for Children (LATCH System)* ⇨ *107*.

8. Before placing a child in the child restraint, make sure it is securely held in place. To check, grasp the child restraint at the seat belt path and attempt to move it side to side and back and forth. When the child restraint is properly installed, there should be no more than 2.5 cm (1 in) of movement.

To remove the child restraint, unbuckle the vehicle seat belt and let it return to the stowed position. If the top tether is attached to a top tether anchor, disconnect it. Reinstall the head restraint or headrest before the seating position is used. See “Head Restraint or Headrest Removal and Reinstallation” under *Lower Anchors and Tethers for Children (LATCH System)* ⇨ *107* for additional information on installing the headrest properly.

Crew Cab

1. Put the child restraint on the seat.
2. Pick up the latch plate, and run the lap and shoulder portions of the vehicle's seat belt through or around the child restraint. The child restraint instructions will show you how.

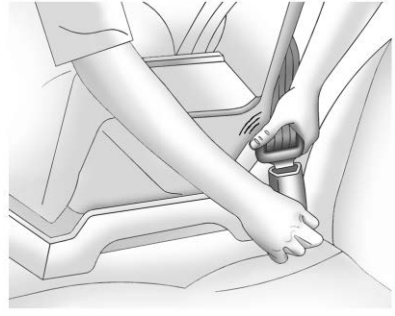

3. Push the latch plate into the buckle until it clicks.

   Position the release button on the buckle, away from the child restraint, so that the seat belt could be quickly unbuckled if necessary.

4. Pull the shoulder belt all the way out of the retractor to set the lock. When the retractor lock is set, the belt can be tightened but not pulled out of the retractor.

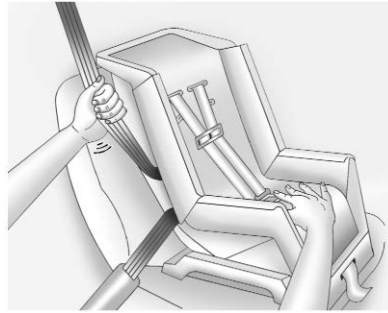

5. To tighten the belt, push down on the child restraint, pull the shoulder portion of the belt to tighten the lap portion of the belt, and feed the shoulder belt back into the retractor. When installing a forward-facing child restraint, it may be helpful to use your knee to push down on the child restraint as you tighten the belt.

   Try to pull the belt out of the retractor to make sure the retractor is locked. If the retractor is not locked, repeat Steps 4 and 5.

6. If the child restraint has a top tether, follow the child restraint manufacturer's instructions regarding the use of the top tether. See *Lower Anchors and Tethers for Children (LATCH System)* ⇨ *107* for more information on using the top tether anchors.

7. Before placing a child in the child restraint, make sure it is securely held in place. To check, grasp the child restraint at the seat belt path and attempt to move it side to side and back and forth. When the child restraint is properly installed, there should be no more than 2.5 cm (1 in) of movement.

To remove the child restraint, unbuckle the vehicle seat belt and let it return to the stowed position. If the top tether is attached to a top tether anchor, disconnect it.

For outboard rear seating positions, if the child restraint cannot be installed properly with the head restraint in place, the head restraint

may be removed. See your dealer for assistance with removal, and store the removed head restraint in a secure place. When the child restraint is removed, reinstall the head restraint before the seating position is used. For reinstallation instructions, see “Head Restraint or Headrest Removal and Reinstallation” under *Lower Anchors and Tethers for Children (LATCH System)* ⇨ *107*.

Securing Child Restraints (In the Center Front Seat)

⚠ Warning

A child in a child restraint in the center front seat can be badly injured or killed by the frontal airbags if they inflate. Never secure a child restraint in the center front seat. It is always better to secure a child restraint in a rear seat.

Do not use child restraints in the center front seat position.

Securing Child Restraints (With the Seat Belt in the Front Outboard Seat)

This vehicle has airbags. A rear seat is a safer place to secure a forward-facing child restraint. See *Where to Put the Restraint* ⇨ *105*.

In addition, the vehicle has a passenger sensing system which is designed to turn off the front outboard passenger frontal airbag under certain conditions. See *Passenger Sensing System* ⇨ *93* and *Passenger Airbag Status Indicator* ⇨ *150* for more information, including important safety information.

Never put a rear-facing child restraint in the front. This is because the risk to the rear-facing child is so great, if the airbag deploys.

⚠ Warning

A child in a rear-facing child restraint can be seriously injured or killed if the front outboard passenger frontal airbag inflates. This is because the back of the rear-facing child restraint would be very close to the inflating airbag. A child in a forward-facing child restraint can be seriously injured or killed if the front outboard passenger frontal airbag inflates and the passenger seat is in a forward position.

Even if the passenger sensing system has turned off the front outboard passenger frontal airbag, no system is fail-safe. No one can guarantee that an airbag will not deploy under some unusual circumstance, even though it is turned off.

Secure rear-facing child restraints in a rear seat, even if the airbag is off. If you secure a

(Continued)

Warning (Continued)

forward-facing child restraint in the front outboard passenger seat, always move the seat as far back as it will go. It is better to secure the child restraint in a rear seat.

See *Passenger Sensing System* ⇨ *93* for additional information.

If the vehicle does not have a rear seat that will accommodate a rear-facing child restraint, a rear-facing child restraint should not be installed in the vehicle, even if the airbag is off.

If the child restraint uses a top tether, see *Lower Anchors and Tethers for Children (LATCH System)* ⇨ *107* for top tether anchor locations.

Do not secure a child seat in a position without a top tether anchor if a national or local law requires that the top tether be anchored, or if the instructions that come with the child restraint say that the top tether must be anchored.

In Canada, the law requires that forward-facing child restraints have a top tether, and that the tether be attached.

When using the lap-shoulder belt to secure the child restraint in this position, follow the instructions that came with the child restraint and the following instructions:

1. Move the seat as far back as it will go before securing the forward-facing child restraint. Move the seat upward or the seatback to an upright position, if needed, to get a tight installation of the child restraint.

   When the passenger sensing system has turned off the front outboard passenger frontal airbag, the OFF indicator on the passenger airbag status indicator should light and stay lit when you start the vehicle. See *Passenger Airbag Status Indicator* ⇨ *150*.

2. Put the child restraint on the seat.

3. Pick up the latch plate, and run the lap and shoulder portions of the vehicle's seat belt through or around the child restraint. The child restraint instructions will show you how.

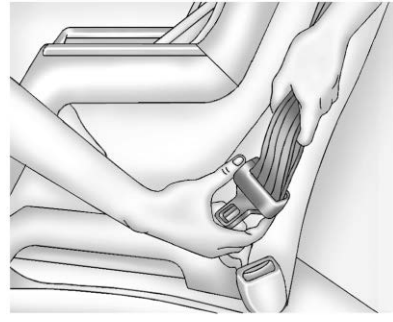

Tilt the latch plate to adjust the belt if needed.

4. Push the latch plate into the buckle until it clicks.

   Position the release button on the buckle, away from the child restraint, so that the seat belt could be quickly unbuckled if necessary.

5. Pull the shoulder belt all the way out of the retractor to set the lock. When the retractor lock is set, the belt can be tightened but not pulled out of the retractor.

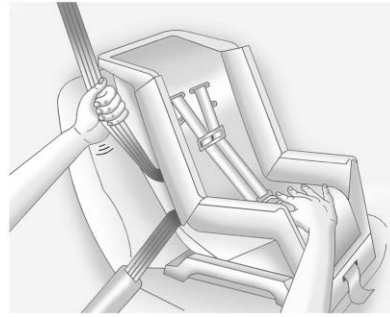

6. To tighten the belt, push down on the child restraint, pull the shoulder portion of the belt to tighten the lap portion of the belt, and feed the shoulder belt back into the retractor. When installing a forward-facing child restraint, it may be helpful to use your knee to push down on the child restraint as you tighten the belt.

   Try to pull the belt out of the retractor to make sure the retractor is locked. If the retractor is not locked, repeat Steps 5 and 6.

7. If the vehicle does not have a rear seat and the child restraint manufacturer recommends using a top tether anchor, attach the top tether to the top tether anchor. Refer to the instructions that came with the child restraint and to *Lower Anchors and Tethers for Children (LATCH System)* ⇨ *107*.
8. Before placing a child in the child restraint, make sure it is securely held in place. To check, grasp the child restraint at the seat belt path and attempt to move it side to side and back and forth. When the child restraint is properly installed, there should be no more than 2.5 cm (1 in) of movement.

If the airbag is off, the OFF indicator in the passenger airbag status indicator will come on and stay on when the vehicle is started.

If a child restraint has been installed and the ON indicator is lit, see “If the On Indicator Is Lit for a Child Restraint” under *Passenger Sensing System* ⇨ *93*.

To remove the child restraint, unbuckle the vehicle seat belt and let it return to the stowed position.

Storage

Storage Compartments
Storage Compartments 126
Glove Box 126
Cupholders 126
Underseat Storage 127
Rear Storage 127
Center Console Storage 127
Floor Console Storage 128

Additional Storage Features
Cargo Tie-Downs 129

Storage Compartments

⚠ Warning

Do not store heavy or sharp objects in storage compartments. In a crash, these objects may cause the cover to open and could result in injury.

Glove Box

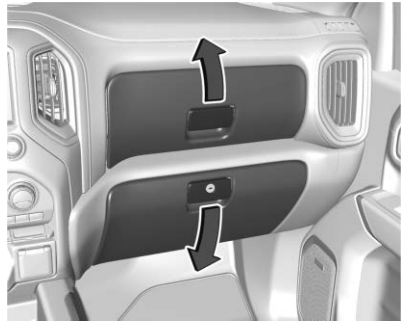

To access the upper glove box, pull up on the handle.

To access the lower glove box, unlock with the key and pull down on the handle.

Cupholders

Front

There may be cupholders on the center front seat console armrest.

Rear

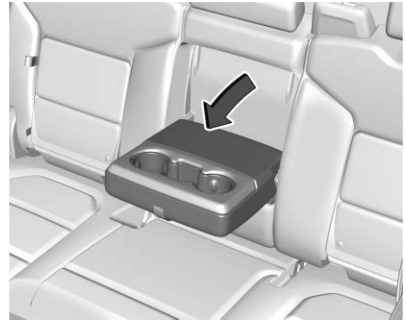

If equipped, pull the rear seat armrest down to access the cupholders.

Underseat Storage

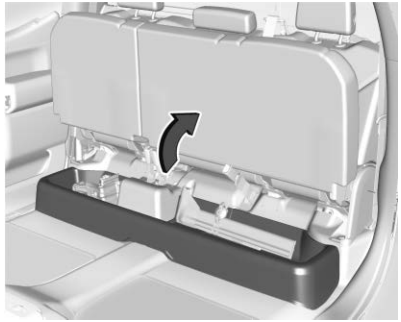

There may be storage under the rear passenger seat. Lift up on the seat bench to access. Push the seat bench toward the floor to close.

Rear Storage

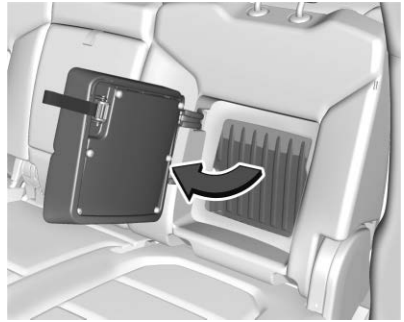

There may be storage in the rear seat. Pull the tab to access.

Push the storage door to close. The storage door must be closed before installing child restraints.

Center Console Storage

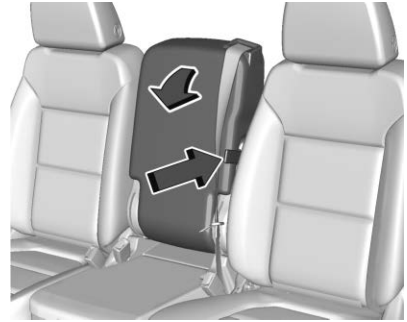

Bench Seat

Pull the strap on the side of the center seatback to access the storage area and cupholders. Do not use the center seatback as a seating position when the seatback is folded down.

To raise the seatback, push the seatback rearward until it locks in the upright position. Push and pull on the seatback to make sure it is locked.

Bench Seat

If equipped with storage, press the latch and lift to open.

Bucket Seat

Press the latch and lift to open.

Floor Console Storage

If equipped with front center seat storage, unlock with the ignition key, press the latch, and lift to open.

Additional Storage Features

Cargo Tie-Downs

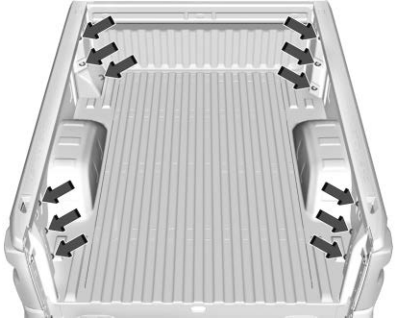

This vehicle is equipped with 12 fixed cargo tie-downs.

Caution
The truck bed walls will collapse if the tie-downs are overloaded.

Any of the 12 locations inside the truck bed can be used. The maximum load per corner is 227 kg (500 lb).

Accessory Tie-Downs

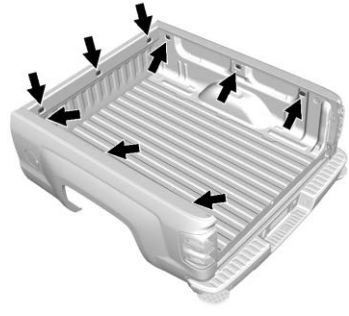

The vehicle may be equipped with cargo tie-downs.

Any of the nine holes inside the truck bed can be used for tie-downs.

The maximum load is 113 kg (250 lb) per tie-down.

Caution
The truck bed walls will collapse if the tie-downs are overloaded.

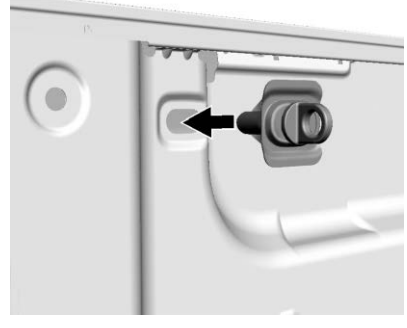

To install:

1. Insert a tie-down loop assembly until it is flush with the truck bed wall.
2. Turn the tie-down loop clockwise to tighten. The tie-down will be hard to turn until the toggle moves past the installation point on the toggle guide.

3. Fasten the tie-down firmly by hand only. Do not use tools.

To remove:

1. Remove the tie-down loop completely by turning counterclockwise while holding the backing plate against the truck bed wall.
2. Pull the backing plate away from the truck bed wall until a click is heard. This locks the toggle into position on the toggle guide.
3. Push the backing plate against the truck bed wall. This allows the toggle nut to spin.
4. Remove the backing plate, toggle guide, and toggle nut from the truck bed wall completely.
5. Reinstall the tie-down loop through the backing plate into the toggle nut for reuse.

Instruments and Controls

Controls

Steering Wheel Adjustment . . . 132
Steering Wheel Controls 133
Heated Steering Wheel 133
Horn 133
Windshield Wiper/Washer 133
Compass 134
Clock 134
Power Outlets 134
Wireless Charging 137

Warning Lights, Gauges, and Indicators

Warning Lights, Gauges, and Indicators 139
Instrument Cluster 140
Speedometer 144
Odometer 145
Trip Odometer 145
Tachometer 145
Fuel Gauge 145
Engine Oil Pressure Gauge 146
Engine Coolant Temperature Gauge 147
Voltmeter Gauge 148
Seat Belt Reminders 149
Airbag Readiness Light 149
Passenger Airbag Status Indicator 150
Charging System Light 151
Malfunction Indicator Lamp (Check Engine Light) 151
Brake System Warning Light 153
Electric Parking Brake Light 154
Service Electric Parking Brake Light 154
Antilock Brake System (ABS) Warning Light 155
Four-Wheel-Drive Light 155
Tow/Haul Mode Light 155
Hill Descent Control Light 155
Lane Keep Assist (LKA) Light 156
Vehicle Ahead Indicator 156
Pedestrian Ahead Indicator . . . 156
Traction Off Light 156
Traction Control System (TCS)/ Electronic Stability Control Light 157
Electronic Stability Control (ESC) Off Light 157
Engine Coolant Temperature Warning Light 158
Driver Mode Control Light 158
Tire Pressure Light 158
Engine Oil Pressure Light (Uplevel Cluster) 159
Low Fuel Warning Light 159
Security Light 160
High-Beam On Light 160
Front Fog Lamp Light 160
Lamps On Reminder 160
Cruise Control Light 160
Door Ajar Light 161

Information Displays

Driver Information Center (DIC) (Base Level) 161
Driver Information Center (DIC) (Midlevel and Uplevel) 162
Head-Up Display (HUD) 165

Vehicle Messages

Vehicle Messages 169
Engine Power Messages 169
Vehicle Speed Messages 169

Vehicle Personalization

Vehicle Personalization 170

Universal Remote System

Universal Remote System 174

Universal Remote System Programming 174
Universal Remote System Operation 177

Controls

Steering Wheel Adjustment

To adjust the steering wheel:

1. Pull the lever down.
2. Move the steering wheel up or down.
3. Pull the lever up to lock the steering wheel in place.

Tilt and Telescoping Wheel

To adjust the tilt and telescoping steering wheel, if equipped:

1. Pull the lever down.
2. Move the steering wheel up or down.
3. Pull or push the steering wheel closer or away from you.
4. Pull the lever up to lock the steering wheel in place.

Do not adjust the steering wheel while driving.

Steering Wheel Controls

The infotainment system can be operated by using the steering wheel controls. See “Steering Wheel Controls” in the infotainment manual.

Heated Steering Wheel

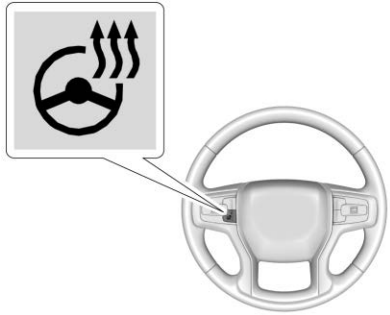

: Press to turn the heated steering wheel on or off. A light next to the button displays when the feature is turned on.

The steering wheel takes about three minutes to start heating.

Automatic Heated Steering Wheel

If equipped with remote start, the heated steering wheel will turn on automatically during a remote start along with the heated seats when it is cold outside. The heated steering wheel indicator light may not come on.

See *Heated and Ventilated Front Seats* ⇨ *76*.

Horn

To sound the horn, press on the steering wheel.

Windshield Wiper/Washer

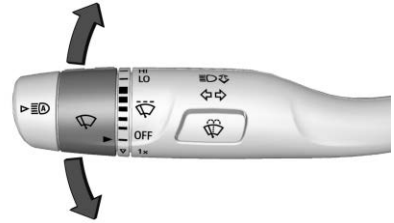

The windshield wiper control is on the turn signal lever.

The windshield wipers are controlled by turning the band with on it.

With the ignition on or in ACC/ACCESSORY, turn the band to select the wiper speed.

HI : Use for fast wipes.

LO : Use for slow wipes.

: Turn the band up for more frequent intermittent wipes or down for less frequent intermittent wipes.

OFF : Use to turn the wipers off.

1x : For a single wipe, briefly turn the band down. For several wipes, hold the band down.

: Press on the windshield wiper control to spray windshield washer fluid and activate the wipers. The wipers will continue until is released or the maximum wash time is reached. When is released, additional wipes may occur depending on how long the windshield washer had been

activated. See *Washer Fluid* ⇨ *338* for information on filling the windshield washer fluid reservoir.

⚠ Warning

In freezing weather, do not use the washer until the windshield is warmed. Otherwise the washer fluid can form ice on the windshield, blocking your vision.

Clear snow and ice from the wiper blades before using them. If frozen to the windshield, carefully loosen or thaw them. Damaged blades should be replaced. See *Wiper Blade Replacement* ⇨ *348*.

Heavy snow or ice can overload the wiper motor.

Wipe Parking

If the ignition is turned off while the wipers are on LO, HI, or ⊽, they will immediately stop.

If the windshield wiper control is then moved to OFF before the driver door is opened or within 10 minutes, the wipers will restart and move to the base of the windshield.

If the ignition is turned off while the wipers are performing wipes due to windshield washing, the wipers continue to run until they reach the base of the windshield.

Compass

The vehicle may have a compass display on the Driver Information Center (DIC). The compass receives its heading and other information from the Global Positioning System (GPS) antenna, Electronic Stability Control (ESC), and vehicle speed information.

The compass system is designed to operate for a certain number of miles or degrees of turn before needing a signal from the GPS satellites. When the compass display shows CAL, drive the vehicle for a short distance in an open area where it can receive a GPS signal. The compass system will automatically determine when a GPS signal is restored and provide a heading again.

Clock

The time and date for the clock can be set using the infotainment system. See “Time/Date” in “System” under “Settings” in the infotainment manual.

Power Outlets

Accessory power outlets can be used to plug in electrical equipment, such as a cell phone or MP3 player.

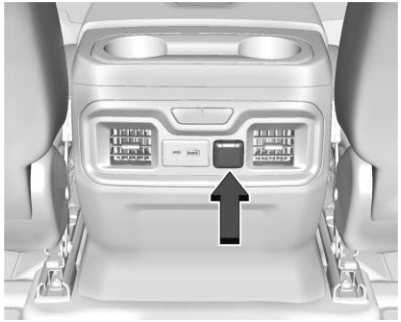

Rear of Front Center Console

The vehicle has one accessory power outlet under the climate control system and one accessory power outlet on the rear of the center console, if equipped, or on the rear of the bench seat, if equipped.

Lift the cover to access and replace when not in use.

⚠ Warning

Power is always supplied to the outlets. Do not leave electrical equipment plugged in when the vehicle is not in use because the vehicle could catch fire and cause injury or death.

Caution

Leaving electrical equipment plugged in for an extended period of time while the vehicle is off will drain the battery. Always unplug electrical equipment when not in use and do not plug in equipment that exceeds the maximum 15 amp rating.

Certain power accessory plugs may not be compatible with the accessory power outlet and could overload vehicle or adapter fuses. If a problem is experienced, see your dealer.

When adding electrical equipment, be sure to follow the proper installation instructions included with the equipment. See *Add-On Electrical Equipment* ⇨ *310*.

Caution

Hanging heavy equipment from the power outlet can cause damage not covered by the vehicle warranty. The power outlets are designed for accessory power plugs only, such as cell phone charge cords.

Power Outlet 110/120-Volt Alternating Current

If equipped, the vehicle has two alternating current power outlets.

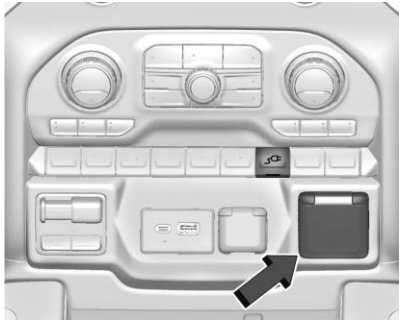

In Cab Power Outlet and DC/AC Switch

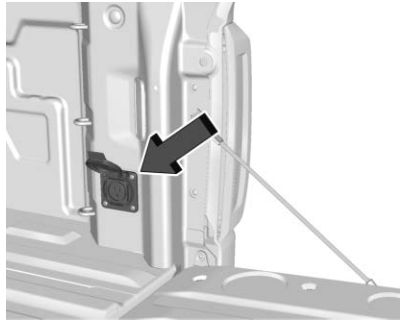

Truck Bed Power Outlet

When the ignition is on, power is supplied to the outlets after the DC/AC switch is pressed. A green indicator light on the DC/AC switch indicates when the DC/AC operation is active. One power outlet can be used with electrical equipment that uses a maximum of 400 watts.
If both outlets are being used, 400 watts will be shared between the outlets. Ensure that all connected devices do not exceed 400 watts.

The power outlet can be turned off by pressing the DC/AC switch. The power outlet can be turned back on after 10 seconds, during which the indicator light on the switch will flash.

An indicator light on the outlet illuminates when power is provided to the outlet and no system fault is detected. The outlets will not operate when the ignition is off, the DC/AC switch is not pressed, or the plug is not fully seated into the outlet.

If equipment is connected using more than 400 watts or a system fault is detected, a protection circuit shuts off the power supply and the indicator light turns off.

Do not use a power outlet with a missing or damaged cover.

The power outlet is not designed for the following, and may not work properly if they are plugged in:

- Equipment with high initial peak wattage, such as compressor-driven refrigerators and electric power tools

- Other equipment requiring an extremely stable power supply, such as microcomputer-controlled electric blankets and touch sensor lamps
- Medical equipment

Wireless Charging

The vehicle may have wireless charging on the center console in front of the cupholders. The system operates at 145 kHz and wirelessly charges one Qi compatible smartphone. The power output of the system is capable of charging at a rate up to 3 amp (19.5 W) as requested by the compatible smartphone. See *Radio Frequency Statement* ⇨ *447*.

⚠ Warning

Wireless charging can affect the operation of an implanted pacemaker or other medical devices. If you have one, it is

(Continued)

Warning (Continued)

recommended to consult with your doctor before using the wireless charging system.

The vehicle must be on, in ACC/ACCESSORY, or Retained Accessory Power (RAP) must be active. The wireless charging feature may not correctly indicate charging when the vehicle is in RAP. See *Retained Accessory Power (RAP)* ⇨ *227*.

The operating temperature is −20 °C (−4 °F) to 60 °C (140 °F) for the charging system and 0 °C (32 °F) to 35 °C (95 °F) for the smartphone.

⚠ Warning

Remove all objects from the charging pad before charging your compatible smartphone. Objects, such as coins, keys, rings, paper clips, or cards,

(Continued)

Warning (Continued)

between the smartphone and charging pad will become very hot. On the rare occasion that the charging system does not detect an object, and the object gets wedged between the smartphone and charger, remove the smartphone and allow the object to cool before removing it from the charging pad, to prevent burns.

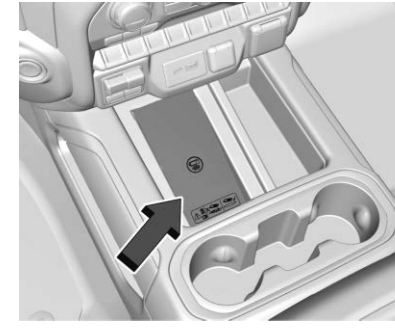

To charge a compatible smartphone:

1. Remove all objects from the charging pad. The system may not charge if there are any objects between the smartphone and charging pad.
2. Place the smartphone face up on the symbol on the charging pad.

   To maximize the charge rate, ensure the smartphone is fully seated and centered in the holder with nothing under it. A thick smartphone case may prevent the wireless charger from working, or may reduce the charging performance. See your dealer for additional information.
3. A green will appear on the on the infotainment display. This indicates that the smartphone is properly positioned and charging. If a smartphone is placed on the charging pad and does not display, remove the smartphone from the pad, turn it 180 degrees, and wait three seconds before placing/aligning the smartphone on the pad again.
4. If turns yellow, ensure that the charging pad is clear of any objects and that the smartphone is capable of wireless charging before re-positioning it. If does not illuminate, the smartphone may need to re-positioned.

   The smartphone may become warm during charging. This is normal. In warmer temperatures, the speed of charging may be reduced.

Software Acknowledgements

Certain Wireless Charging Module product from LG Electronics, Inc. ("LGE") contains the open source software detailed below. Refer to the indicated open source licenses (as are included following this notice) for the terms and conditions of their use.

OSS Notice Information

To obtain the source code that is contained in this product, please visit http://opensource.lge.com. In addition to the source code, all referred license terms, warranty disclaimers and copyright notices are available for download. LG Electronics will also provide open source code to you on CD-ROM for a charge covering the cost of performing such distribution (such as the cost of media, shipping, and handling) upon email request to opensource@lge.com. This offer is valid for three (3) years from the date on which you purchased the product.

Freescale-WCT library

Copyright (c) 2012-2014 Freescale Semiconductor, Inc.. All rights reserved.

1. Redistributions of source code must retain the above copyright notice, this list of conditions and the following disclaimer.

2. Redistributions in binary form must reproduce the above copyright notice, this list of conditions and the following disclaimer in the documentation and/or other materials provided with the distribution.
3. Neither the name of the copyright holder nor the names of its contributors may be used to endorse or promote products derived from this software without specific prior written permission.

THIS SOFTWARE IS PROVIDED BY THE COPYRIGHT HOLDERS AND CONTRIBUTORS "AS IS" AND ANY EXPRESS OR IMPLIED WARRANTIES, INCLUDING, BUT NOT LIMITED TO, THE IMPLIED WARRANTIES OF MERCHANTABILITY AND FITNESS FOR A PARTICULAR PURPOSE ARE DISCLAIMED. IN NO EVENT SHALL THE COPYRIGHT HOLDER OR CONTRIBUTORS BE LIABLE FOR ANY DIRECT, INDIRECT, INCIDENTAL, SPECIAL, EXEMPLARY, OR CONSEQUENTIAL DAMAGES (INCLUDING, BUT NOT LIMITED TO, PROCUREMENT OF SUBSTITUTE GOODS OR SERVICES; LOSS OF USE, DATA, OR PROFITS; OR BUSINESS INTERRUPTION) HOWEVER CAUSED AND ON ANY THEORY OF LIABILITY, WHETHER IN CONTRACT, STRICT LIABILITY, OR TORT (INCLUDING NEGLIGENCE OR OTHERWISE) ARISING IN ANY WAY OUT OF THE USE OF THIS SOFTWARE, EVEN IF ADVISED OF THE POSSIBILITY OF SUCH DAMAGE.

Warning Lights, Gauges, and Indicators

Warning lights and gauges can signal that something is wrong before it becomes serious enough to cause an expensive repair or replacement. Paying attention to the warning lights and gauges could prevent injury.

Some warning lights come on briefly when the engine is started to indicate they are working. When one of the warning lights comes on and stays on while driving, or when one of the gauges shows there may be a problem, check the section that explains what to do. Waiting to do repairs can be costly and even dangerous.

Instrument Cluster

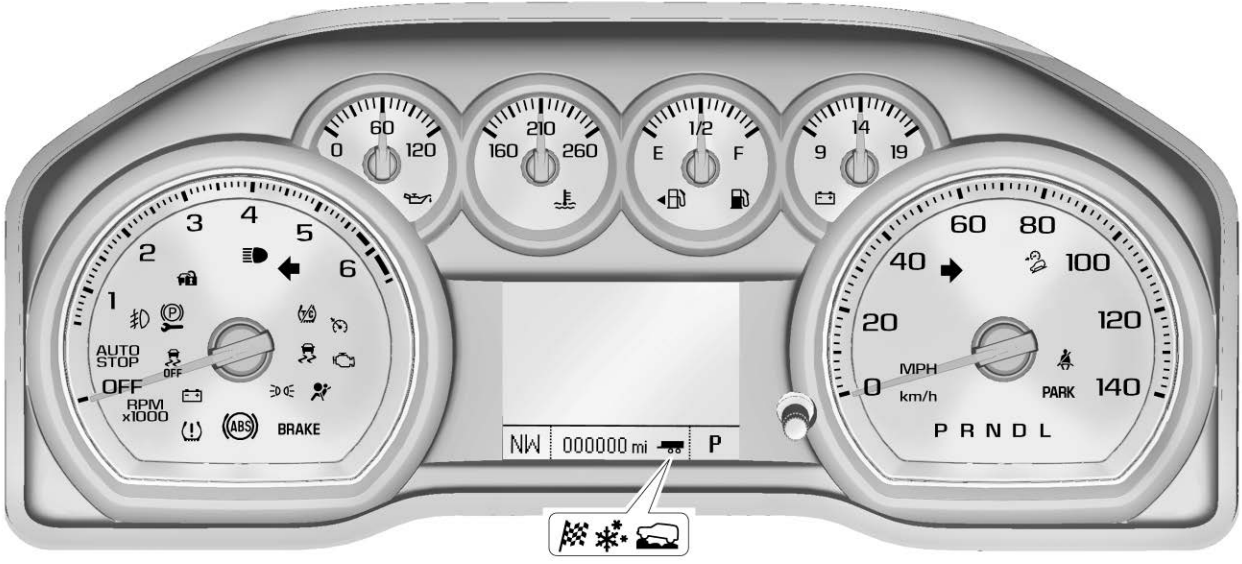

Base Level Cluster English Shown, Metric Similar

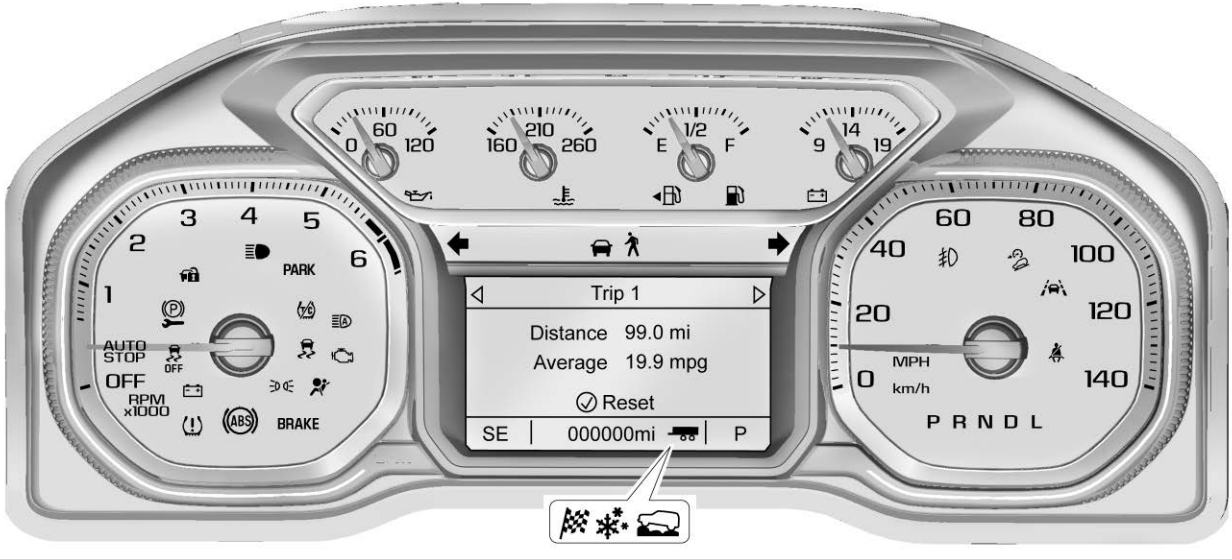

Midlevel Cluster English Shown, Metric Similar

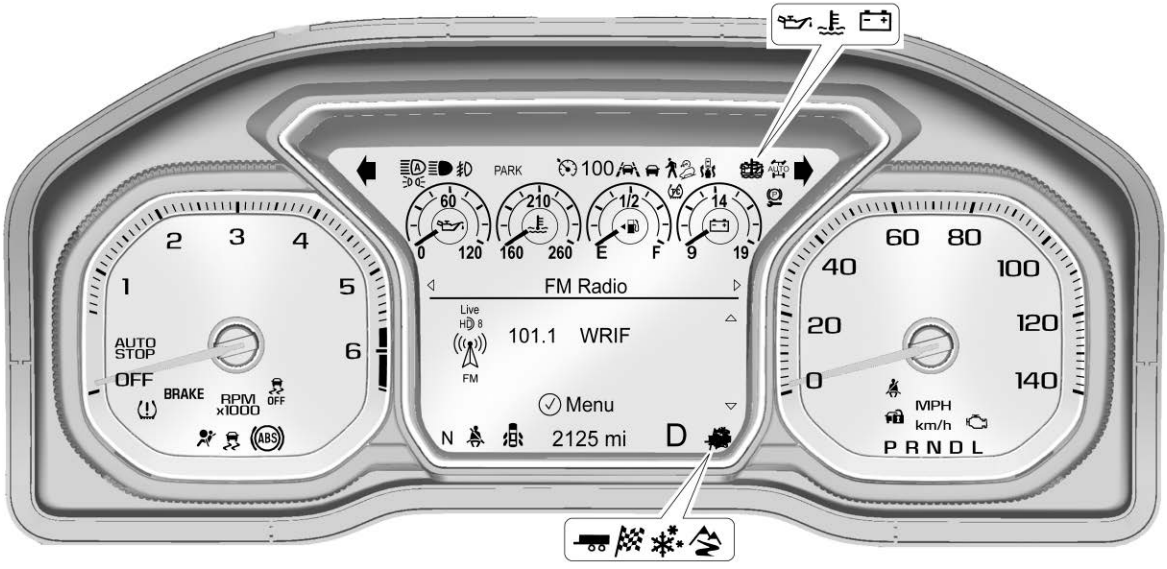

Uplevel Cluster English Standard Shown, Metric Similar

Cluster Menu (Midlevel and Uplevel)

There is an interactive display area in the center of the instrument cluster.

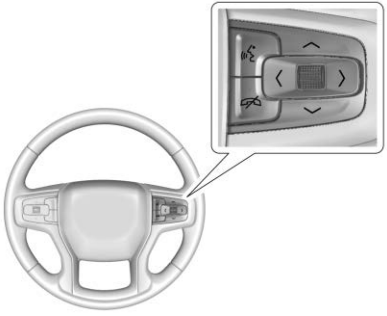

Use the right steering wheel control to open and scroll through the different items and displays.

Press < or > to access the cluster applications. Use the thumbwheel to scroll through the list of available features. Press the thumbwheel to select. Not all applications will be available on all vehicles.

- Home
- Info App. This is where the selected Driver Information Center (DIC) displays can be viewed. See “Driver Information Center (DIC) (Uplevel)” in the Index.
- Audio
- Navigation
- Phone
- Options

Home

Information displayed here can be customized from the Options menu.

Speedometer : Displays how fast the vehicle is moving in either kilometers per hour (km/h) or miles per hour (mph).

Speed Sign : Shows sign information, which comes from a roadway database in the onboard navigation, if equipped.

Time : Displays the current time.

Fuel Range : Displays the approximate distance the vehicle can be driven without refueling. The fuel range estimate is based on an average of the vehicle’s fuel economy over recent driving history and the amount of fuel remaining in the fuel tank. Fuel range cannot be reset.

Audio

In the Audio menu, use the thumbwheel to scroll through options, browse for music, select from favorites, or change the audio source. In the main view, scroll to change the station or go to the next or previous track.

Navigation

In the Navigation menu, if there is no active route, a compass will be displayed. If there is an active route, press the thumbwheel to cancel or resume route guidance, mute or unmute voice guidance, or access Recents or Favorites.

Phone

In the Phone menu, if there is no active phone call, view recent calls, scroll through contacts, select from the favorites, or change the phone source. If there is an active call, mute the phone or switch to handset operation.

Options

Use the thumbwheel to scroll through items in the Options menu.

Head-up Display (HUD) :
If equipped, this feature allows for adjusting the angle of the HUD image and changing or turning off the Speed Limit Sign.

HUD Rotation: Press the thumbwheel while Adjust Rotation is highlighted to enter Adjust Mode. Scroll to adjust the angle of the HUD display. Press the thumbwheel to confirm and save the setting. This feature may only be available in P (Park).

Speed Limit Style: Press the thumbwheel while Speed Limit Style is highlighted to change the speed sign style or to turn it off.

Units : Press the thumbwheel while Units is displayed to enter the Units menu. Choose US or metric units by pressing the thumbwheel while the desired item is highlighted.
A selected mark will be displayed next to the selected item.

Info Page Options : Press the thumbwheel while Info Page Options is displayed to enter and select the items to be displayed in the Info app. A selected mark will be displayed next to the selected item.

Home : Press the thumbwheel to select the available elements to display. Not all elements will be available on all vehicles: Speedometer, Speed Sign, Time, and Fuel Range.

Display (Uplevel) : Press the thumbwheel to enter the Display menu. Select to turn on or off the compass or speed sign.

Speed Warning : The Speed Warning display allows the driver to set a speed that they do not want to exceed. To set the Speed Warning, press the thumbwheel when Speed Warning is displayed, or press the thumbwheel on the main view to set the speed value. Scroll to adjust the value. Press the thumbwheel to set the speed. Once the speed is set, this feature can be turned off by pressing the thumbwheel while viewing this page. If the selected speed limit is exceeded, a pop-up warning is displayed with a chime.

Software Information : Press the thumbwheel while Software Information is highlighted to display open source software information.

Speedometer

The speedometer shows the vehicle's speed in either kilometers per hour (km/h) or miles per hour (mph).

Odometer

The odometer shows how far the vehicle has been driven, in either kilometers or miles. The odometer displays on the Speed page of the Driver Information Center (DIC).

Trip Odometer

The trip odometer shows how far the vehicle has been driven since the trip odometer was last reset.

The trip odometer is accessed and reset through the Driver Information Center (DIC). See *Driver Information Center (DIC) (Midlevel and Uplevel)* ⇨ *162* or *Driver Information Center (DIC) (Base Level)* ⇨ *161*.

Tachometer

The tachometer displays the engine speed in revolutions per minute (rpm).

For vehicles with the Stop/Start system, when the ignition is on, the tachometer indicates the vehicle status. When pointing to AUTO STOP, the engine is off but the vehicle is on and can move. The engine could auto start at any time. When the indicator points to OFF, the vehicle is off.

When the engine is on, the tachometer will indicate the engine's revolutions per minute (rpm). The tachometer may vary by several hundred rpm's, during Auto Stop mode, when the engine is shutting off and restarting.

Fuel Gauge

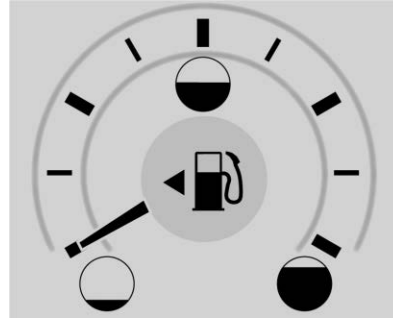

Uplevel Metric Fuel Gauge Shown, Base Level and Midlevel Fuel Gauge Similar

Uplevel English Fuel Gauge Shown, Base Level and Midlevel Fuel Gauge Similar

When the ignition is on, the fuel gauge indicates about how much fuel is left in the tank.

There is an arrow near the fuel gauge pointing to the side of the vehicle the fuel door is on.

When the indicator nears empty, the low fuel light comes on. There still is a little fuel left, but the vehicle should be refueled soon.

Here are four things that some owners ask about. None of these show a problem with the fuel gauge:

- At the service station, the fuel pump shuts off before the gauge reads full.
- It takes a little more or less fuel to fill up than the gauge indicated. For example, the gauge may have indicated the tank was half full, but it actually took a little more or less than half the tank's capacity to fill the tank.
- The gauge moves a little while turning a corner or speeding up.
- The gauge takes a few seconds to stabilize after the ignition is turned on, and goes back to empty when the ignition is turned off.

Engine Oil Pressure Gauge

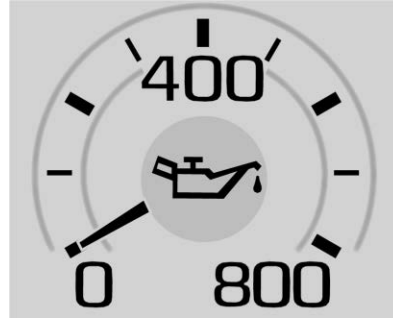

Uplevel Metric Shown, Base Level and Midlevel Similar

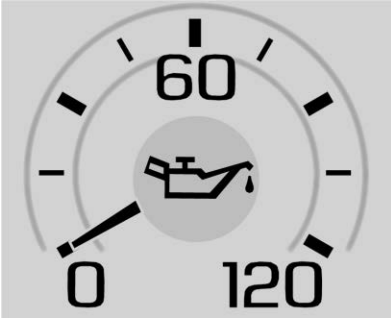

Uplevel English Shown, Base Level and Midlevel Similar

The engine oil pressure gauge shows the engine oil pressure in kPa (kilopascals) or psi (pounds per square inch) when the engine is running.

Oil pressure can vary with engine speed, outside temperature, coolant temperature, and oil viscosity.

On some models, the oil pump will vary engine oil pressure according to engine needs. Oil pressure may change quickly as the engine speed or load varies. This is normal. If the oil pressure warning light or Driver Information Center (DIC) message indicates oil pressure outside the normal operating range, check the vehicle's oil as soon as possible.

See *Engine Oil* ⇨ *325*.

Caution
Lack of proper engine oil maintenance can damage the engine. Driving with the engine oil low can also damage the engine. The repairs would not be covered by the vehicle warranty. Check the oil level as soon as possible. Add oil if required, but if the oil level is within the operating range and the oil pressure is still low, have the vehicle serviced. Always follow the maintenance schedule for changing engine oil.

If the vehicle has a diesel engine, see the Duramax diesel supplement.

Engine Coolant Temperature Gauge

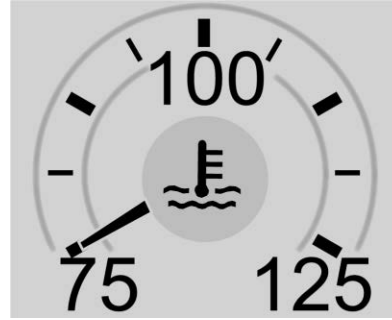

Uplevel Metric Shown, Base Level and Midlevel Similar

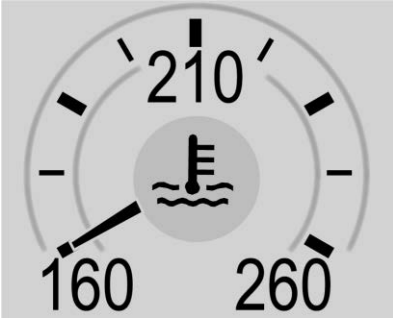

Uplevel English Shown, Base Level and Midlevel Similar

This gauge measures the temperature of the vehicle's engine coolant.

While driving under normal operating conditions, if the needle moves into the red warning area, the engine is too hot. Pull off the road, stop the vehicle, and turn off the engine as soon as possible.

Voltmeter Gauge

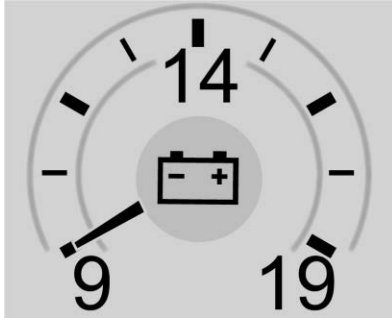

Uplevel Shown, Base Level and Midlevel Similar

When the ignition is on, this gauge indicates the battery voltage.

When the engine is running, this gauge shows the condition of the charging system. The gauge can transition from a higher to lower or a lower to higher reading. This is normal. If the vehicle is operating outside the normal operating range, the charging system light comes on. See *Charging System Light* ⇨ *151*.

The voltmeter gauge may also read lower when in fuel economy mode. This is normal.

Readings outside the normal operating range can also occur when a large number of electrical accessories are operating in the vehicle and the engine is left idling for an extended period. This condition is normal since the charging system is not able to provide full power at engine idle. As engine speeds are increased, this condition should correct itself as higher engine speeds allow the charging system to create maximum power.

The vehicle can only be driven for a short time with the readings outside the normal operating range. If the vehicle must be driven, turn off all accessories, such as the radio and air conditioner.

Readings outside the normal operating range indicate a possible problem in the electrical system. Have the vehicle serviced as soon as possible.

Seat Belt Reminders

Driver Seat Belt Reminder Light

There is a driver seat belt reminder light on the instrument cluster.

When the vehicle is started, this light flashes and a chime may come on to remind the driver to fasten their seat belt. Then the light stays on solid until the belt is buckled. This cycle may continue several times if the driver remains or becomes unbuckled while the vehicle is moving.

If the driver seat belt is buckled, neither the light nor the chime comes on.

Passenger Seat Belt Reminder Light

There may be a passenger seat belt reminder light near the passenger airbag status indicator. See *Passenger Sensing System* ⇨ *93*.

For vehicles equipped with the passenger seat belt reminder light, when the vehicle is started this light flashes and a chime may come on to remind passengers to fasten their seat belt. Then the light stays on solid until the belt is buckled. This cycle continues several times if the passenger remains or becomes unbuckled while the vehicle is moving.

If the passenger seat belt is buckled, neither the chime nor the light comes on.

The front passenger seat belt reminder light and chime may turn on if an object is put on the seat such as a briefcase, handbag, grocery bag, laptop, or other electronic device. To turn off the reminder light and/or chime, remove the object from the seat or buckle the seat belt.

Airbag Readiness Light

This light shows if there is an electrical problem with the airbag system. The system check includes the airbag sensor(s), the passenger sensing system, the pretensioners, the airbag modules, the wiring, and the crash sensing and diagnostic module. For more information on the airbag system, see *Airbag System* ⇨ *87*.

The airbag readiness light comes on for several seconds when the vehicle is started. If the light does not come on then, have it fixed immediately.

⚠ Warning

If the airbag readiness light stays on after the vehicle is started or comes on while driving, it means the airbag system might not be working properly. The airbags in the vehicle might not inflate in a crash, or they could even inflate without a crash. To help avoid injury, have the vehicle serviced right away.

If there is a problem with the airbag system, a Driver Information Center (DIC) message may also come on.

Passenger Airbag Status Indicator

The vehicle has a passenger sensing system. See *Passenger Sensing System* ⇨ *93* for important safety information. The overhead console has a passenger airbag status indicator.

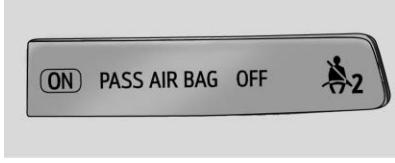

United States

Canada

When the vehicle is started, the passenger airbag status indicator will light ON and OFF, or the symbols for on and off, for several seconds as a system check. Then, after several more seconds, the status indicator will light either ON or OFF, or either the on or off symbol, to let you know the status of the front outboard passenger frontal airbag.

If the word ON or the on symbol is lit on the passenger airbag status indicator, it means that the front outboard passenger frontal airbag is allowed to inflate.

If the word OFF or the off symbol is lit on the passenger airbag status indicator, it means that the passenger sensing system has turned off the front outboard passenger frontal airbag.

If, after several seconds, both status indicator lights remain on, or if there are no lights at all, there may be a problem with the lights or the passenger sensing system. See your dealer for service.

⚠ Warning

If the airbag readiness light ever comes on and stays on, it means that something may be wrong with the airbag system. To help avoid injury to yourself or others, have the vehicle serviced right

(Continued)

Warning (Continued)

away. See *Airbag Readiness Light* ⇨ *149* for more information, including important safety information.

Charging System Light

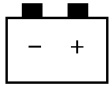

The charging system light comes on briefly when the ignition is turned on, but the engine is not running, as a check to show the light is working. It should go out when the engine is started.

If the light stays on, or comes on while driving, there may be a problem with the electrical charging system. Have it checked by your dealer. Driving while this light is on could drain the battery.

When this light comes on, or is flashing, the Driver Information Center (DIC) also displays a message.

If a short distance must be driven with the light on, be sure to turn off all accessories, such as the radio and air conditioner.

Malfunction Indicator Lamp (Check Engine Light)

This light is part of the vehicle's emission control on-board diagnostic system. If this light is on while the engine is running, a malfunction has been detected and the vehicle may require service. The light should come on to show that it is working when the ignition is on and the engine is not running. See *Ignition Positions (Key Access)* ⇨ *219* or *Ignition Positions (Keyless Access)* ⇨ *221*.

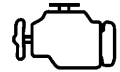

Malfunctions are often indicated by the system before any problem is noticeable. Being aware of the light and seeking service promptly when it comes on may prevent damage.

Caution

If the vehicle is driven continually with this light on, the emission control system may not work as well, the fuel economy may be lower, and the vehicle may not run smoothly. This could lead to costly repairs that might not be covered by the vehicle warranty.

Caution

Modifications to the engine, transmission, exhaust, intake, or fuel system, or the use of replacement tires that do not meet the original tire specifications, can cause this light to come on. This could lead to costly repairs not covered by the vehicle warranty. This could also affect the vehicle's ability to pass an Emissions Inspection/ Maintenance test. See *Accessories and Modifications* ⇨ *317*.

If the light is flashing : A malfunction has been detected that could damage the emission control system and increase vehicle emissions. Diagnosis and service may be required.

To help prevent damage, reduce vehicle speed and avoid hard accelerations and uphill grades.

If towing a trailer, reduce the amount of cargo being hauled as soon as possible.

If the light continues to flash, find a safe place to park. Turn the vehicle off and wait at least 10 seconds before restarting the engine. If the light is still flashing, follow the previous guidelines and see your dealer for service as soon as possible.

If the light is on steady : A malfunction has been detected. Diagnosis and service may be required.

Check the following:

- If fuel has been added to the vehicle using the capless funnel adapter, make sure that it has been removed. See "Filling the Tank with a Portable Gas Can" under *Filling the Tank* ⇨ *277*. The diagnostic system can detect if the adapter has been left installed in the vehicle, allowing fuel to evaporate into the atmosphere. A few driving trips with the adapter removed may turn off the light.
- Poor fuel quality can cause inefficient engine operation and poor driveability, which may go away once the engine is warmed up. If this occurs, change the fuel brand. It may require at least one full tank of the proper fuel to turn the light off. See *Recommended Fuel (Except 6.2L V8 Engine)* ⇨ *275* or *Recommended Fuel (6.2L V8 Engine)* ⇨ *275*.

If the light remains on, see your dealer.

Emissions Inspection and Maintenance Programs

If the vehicle requires an Emissions Inspection/Maintenance test, the test equipment will likely connect to the vehicle's Data Link Connector (DLC).

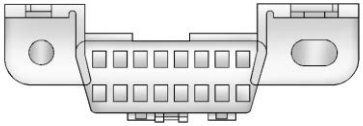

The DLC is under the instrument panel to the left of the steering wheel. Connecting devices that are not used to perform an Emissions Inspection/Maintenance test or to service the vehicle may affect vehicle operation. See *Add-On Electrical Equipment* ⇨ *310*. See your dealer if assistance is needed.

The vehicle may not pass inspection if:

- The light is on when the engine is running.
- The light does not come on when the ignition is on while the engine is off.
- Critical emission control systems have not been completely diagnosed. If this happens, the vehicle would not be ready for inspection and might require several days of routine driving before the system is ready for inspection. This can happen if the 12-volt battery has recently been replaced or run down, or if the vehicle has been recently serviced.

See your dealer if the vehicle will not pass or cannot be made ready for the test.

Brake System Warning Light

The vehicle brake system consists of electronically controlled hydraulic brake circuits. If a fault is detected, valves are adjusted to allow the brake pedal to push brake fluid directly into the hydraulic brake circuits. When a fault occurs, the brake system warning light comes on, and Driver Information Center (DIC) messages may display. Vehicle speed may also be limited and the amount of brake pedal force applied may need to increase. Have the vehicle brake system serviced as soon as possible.

BRAKE

Metric **English**

This light should come on briefly when the engine is started. If it does not come on then, have it fixed so it will be ready to warn if there is a problem.

The brake system warning light may also come on when the parking brake is set, if the vehicle has low brake fluid, or if the brakes are severely faded. See *Brake Fluid* ⇨ *340*. If the brakes are overheated, DIC messages may display, and the vehicle speed may be limited. If the brake fluid is not low, if the brakes are not overheated, and if the parking brake is fully released, then the vehicle has a brake problem. Have the vehicle brake system serviced as soon as possible.

If the light comes on while driving, pull off the road and stop carefully. The pedal might be harder to push, or the pedal may go closer to the floor. It could take longer to stop. If the light is still on, have the vehicle towed for service. See *Towing the Vehicle* ⇨ *402*.

⚠ Warning

The brake system might not be working properly if the brake system warning light is on. Driving with the brake system warning light on can lead to a crash. If the light is still on after the vehicle has been pulled off the road and carefully stopped, have the vehicle towed for service.

Electric Parking Brake Light

PARK

Metric **English**

This light comes on when the parking brake is applied. If the light continues flashing after the parking brake is released, or while driving, there is a problem with the Electric Parking Brake system. A message may also display in the Driver Information Center (DIC).

If the light does not come on, or remains flashing, see your dealer.

Service Electric Parking Brake Light

This light should come on briefly when starting the vehicle. If it does not come on, have it fixed so it will be ready to warn if there is a problem.

If this light stays on, take the vehicle to your dealer as soon as possible. See the information for the Electric Parking Brake under *Electric Parking Brake* ⇨ *244*. A message may also display in the Driver Information Center (DIC).

Antilock Brake System (ABS) Warning Light

This light comes on briefly when the engine is started.

If the light does not come on, have it fixed so it will be ready to warn if there is a problem.

If the light comes on while driving, stop as soon as it is safely possible and turn off the vehicle. Then start the engine again to reset the system. If the ABS light stays on, or comes on again while driving, the vehicle needs service. A chime may also sound when the light comes on steady.

If the ABS light is the only light on, the vehicle has regular brakes, but the antilock brakes are not functioning.

If both the ABS and the brake system warning light are on, the vehicle's antilock brakes are not functioning and there is a problem with the regular brakes. See your dealer for service.

See *Brake System Warning Light* ⇨ *153*.

Four-Wheel-Drive Light

Auto Mode Shown, Other Modes Similar

If equipped, the four-wheel-drive light displays what mode the vehicle is in. The light will show each mode: 2WD, 4HI, AUTO (all transfer cases); 4LOW and N (two-speed transfer case only).

The light will flash when a shift is in progress. Once the shift is complete the light will be steady.

If the light turns amber, there may be a malfunction with the four-wheel-drive system. See your dealer.

See *Four-Wheel Drive* ⇨ *238*.

Tow/Haul Mode Light

For vehicles with the Tow/Haul Mode feature, this light comes on when the Tow/Haul Mode has been activated.

See *Tow/Haul Mode* ⇨ *237*.

Hill Descent Control Light

If equipped, the Hill Descent Control light comes on when the system is ready for use. When the light flashes, the system is active.

See *Hill Descent Control (HDC)* ⇨ *248*.

Lane Keep Assist (LKA) Light

If available, this light comes on briefly while starting the vehicle.

If it does not come on, have the vehicle serviced.

This light is green if LKA is available to assist.

LKA may assist by gently turning the steering wheel if the vehicle approaches a detected lane marking without using the turn signal in that direction. The LKA light will turn amber.

This light is amber and flashes as a Lane Departure Warning (LDW) alert, to indicate that the lane marking has been crossed.

See *Lane Keep Assist (LKA)* ⇨ *273*.

Vehicle Ahead Indicator

If equipped, this indicator will display green when a vehicle is detected ahead and amber when you are following a vehicle ahead much too closely.

See *Forward Collision Alert (FCA) System* ⇨ *264*.

Pedestrian Ahead Indicator

If equipped, this indicator will display amber when a nearby pedestrian is detected directly in front of the vehicle.

See *Front Pedestrian Braking (FPB) System* ⇨ *268*.

Traction Off Light

This light comes on briefly while starting the engine. If it does not, have the vehicle serviced by your

dealer. If the system is working normally, the indicator light then turns off.

The traction off light comes on when the Traction Control System (TCS) has been turned off by pressing and releasing the TCS/ESC button.

This light and the Electronic Stability Control (ESC) OFF light come on when ESC is turned off.

If the TCS is off, wheel spin is not limited. Adjust driving accordingly.

See *Traction Control/Electronic Stability Control* ⇨ *246*.

Traction Control System (TCS)/Electronic Stability Control Light

If equipped, the Electronic Stability Control (ESC) or TCS indicator/warning light comes on briefly when the engine is started.

If the light does not come on, have the vehicle serviced by your dealer. If the system is working normally, the indicator light turns off.

If the light is on and not flashing, the TCS, and potentially the ESC system have been disabled.

If the indicator/warning light is on and flashing, the TCS and/or the ESC system is actively working.

See *Traction Control/Electronic Stability Control* ⇨ *246*.

Trailer Sway Control Light (Uplevel Cluster)

This light will flash when Trailer Sway Control is active. See *Trailer Sway Control (TSC)* ⇨ *298*.

Electronic Stability Control (ESC) Off Light

This light comes on briefly while starting the engine. If it does not, have the vehicle serviced by your dealer.

This light comes on when the ESC system is turned off. If ESC is off, the Traction Control System (TCS) is also off.

If the ESC and TCS are off, the system does not assist in controlling the vehicle. Turn on the TCS and the ESC systems and the warning light turns off.

See *Traction Control/Electronic Stability Control* ⇨ *246*.

Engine Coolant Temperature Warning Light

This light comes on briefly while starting the vehicle.

If it does not, have the vehicle serviced by your dealer. If the system is working normally the indicator light goes off.

Caution
The engine coolant temperature warning light indicates that the vehicle has overheated. Driving with this light on can damage the engine and it may not be covered by the vehicle warranty. See *Engine Overheating* ⇨ *335*.

The engine coolant temperature warning light comes on when the engine has overheated.

If this happens, pull over and turn off the engine as soon as possible. See *Engine Overheating* ⇨ *335*.

Driver Mode Control Light

This light comes on when Sport Mode is selected.

This light comes on when Snow Mode is selected.

This light comes on when Terrain Mode is selected.

This light comes on when Off-Road Mode is selected.

Tire Pressure Light

For vehicles with the Tire Pressure Monitor System (TPMS), this light comes on briefly when the engine is started. It provides information about tire pressures and the TPMS.

When the Light Is On Steady

This indicates that one or more of the tires are significantly underinflated.

A Driver Information Center (DIC) tire pressure message may also display. Stop as soon as possible, and inflate the tires to the pressure value shown on the Tire and Loading Information label. See *Tire Pressure* ⇨ *371*.

When the Light Flashes First and Then Is On Steady

If the light flashes for about a minute and then stays on, there may be a problem with the TPMS. If the problem is not corrected, the light will come on at every ignition cycle. See *Tire Pressure Monitor Operation* ⇨ *374*.

Engine Oil Pressure Light (Uplevel Cluster)

Caution

Lack of proper engine oil maintenance can damage the engine. Driving with the engine oil low can also damage the engine. The repairs would not be covered by the vehicle warranty. Check the oil level as soon as possible. Add oil if required, but if the oil level is within the operating range and the oil pressure is still low, have the vehicle serviced. Always follow the maintenance schedule for changing engine oil.

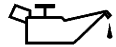

This light should come on briefly as the engine is started. If it does not come on, have the vehicle serviced by your dealer.

If the light comes on and stays on, it means that oil is not flowing through the engine properly. The vehicle could be low on oil and might have some other system problem. See your dealer.

Low Fuel Warning Light

This light is near the fuel gauge and comes on briefly when the ignition is turned on as a check to show it is working.

It also comes on when the fuel tank is low on fuel. The light turns off when fuel is added. If it does not, have the vehicle serviced.

Security Light

The security light should come on briefly as the engine is started. If it does not come on, have the vehicle serviced by your dealer. If the system is working normally, the indicator light turns off.

If the light stays on and the engine does not start, there could be a problem with the theft-deterrent system. See *Immobilizer Operation* ⇨ *56*.

High-Beam On Light

This light comes on when the high-beam headlamps are in use. See *Headlamp High/Low-Beam Changer* ⇨ *180*.

IntelliBeam Light

This light comes on when the IntelliBeam system, if equipped, is enabled. See *Exterior Lamp Controls* ⇨ *178*.

Front Fog Lamp Light

For vehicles with fog lamps, this light comes on when the fog lamps are on.

The light goes out when the fog lamps are turned off. See *Fog Lamps* ⇨ *183*.

Lamps On Reminder

This light comes on when the exterior lamps are in use. See *Exterior Lamp Controls* ⇨ *178*.

Cruise Control Light

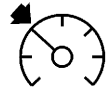

For vehicles with cruise control, the cruise control light is white when the cruise control is on and ready, and turns green when the cruise control is set and active.

The light turns off when the cruise control is turned off. See *Cruise Control* ⇨ *254*.

Door Ajar Light

This light comes on when a door is open or not securely latched. Before driving, check that all doors are properly closed.

Information Displays

Driver Information Center (DIC) (Base Level)

The DIC displays are shown in the center of the instrument cluster. The displays show the status of many vehicle systems. The trip odometer reset stem in the instrument cluster is used to access the DIC menu items.

If the vehicle has a diesel engine, see the Duramax diesel supplement for more information.

DIC Menu Items

Turn the trip odometer reset stem to scroll through the following menu items:

- Digital Speedometer
- Trip 1/2
- Fuel Range
- Tire Pressure
- Remaining Oil Life
- Air Filter Life
- Brake Pad Life

Digital Speedometer

The speedometer shows how fast the vehicle is moving in either kilometers per hour (km/h) or miles per hour (mph). The speedometer cannot be reset.

Trip 1 or 2 and Average Fuel Economy

Turn the trip odometer reset stem until TRIP 1 or TRIP 2 displays. The current distance traveled, in either kilometers (km) or miles (mi), since the last reset for the trip odometer is shown, as well as the average fuel economy. The trip odometer and the average fuel economy can be reset by pressing and holding the trip odometer reset stem.

Fuel Range

This display shows the approximate distance the vehicle can be driven without refueling. The fuel range estimate is based on an average of the vehicle's fuel economy over

recent driving history and the amount of fuel remaining in the fuel tank. Fuel range cannot be reset.

Tire Pressure

Turn the trip odometer reset stem until a vehicle with the approximate pressures of all four tires displays. Tire pressure is displayed in either kilopascal (kPa) or in pounds per square inch (psi).

See *Tire Pressure Monitor System* ⇨ *373* and *Tire Pressure Monitor Operation* ⇨ *374*.

Remaining Oil Life

Turn the trip odometer reset stem until REMAINING OIL LIFE displays. An estimate of the oil's remaining useful life is shown. REMAINING OIL LIFE 99% means 99% of the current oil life remains.

When the remaining oil life is low, the CHANGE ENGINE OIL SOON message will appear on the display. The oil should be changed as soon as possible. See *Engine Oil* ⇨ *325*. In addition to the engine oil life system monitoring the oil life, additional maintenance is recommended. See *Maintenance Schedule* ⇨ *419*.

The Oil Life display must be reset after each oil change. It will not reset itself. Do not reset the Oil Life display at any time other than when the oil has just been changed. It cannot be reset accurately until the next oil change. To reset the engine oil life system, see *Engine Oil Life System* ⇨ *327*.

Air Filter Life

Turn the trip odometer reset stem until AIR FILTER LIFE displays. This displays an estimate of the engine air filter’s remaining useful life and the state of the system. Engine Air Filter Life 95% means 95% of the current air filter life remains. Messages will display based on the engine air filter life and the state of the system.

When the REPLACE AT NEXT OIL CHANGE message displays, the engine air filter should be replaced at the time of the next oil change.

When the REPLACE SOON message displays, the engine air filter should be replaced at the earliest convenience.

The Air Filter Life display must be reset after the engine air filter replacement. To reset, see *Engine Air Filter Life System* ⇨ *329*.

Brake Pad Life

This displays an estimate of the remaining life of the front and rear brake pads. Messages will display based on brake pad wear and the state of the system. Reset the Brake Pad Life display after replacing the brake pads. See *Brake Pad Life System* ⇨ *339*.

Driver Information Center (DIC) (Midlevel and Uplevel)

The DIC displays are shown in the center of the instrument cluster in the Info app. See *Instrument Cluster* ⇨ *140*. The displays show the status of many vehicle systems.

If the vehicle has a diesel engine, see the Duramax diesel supplement.

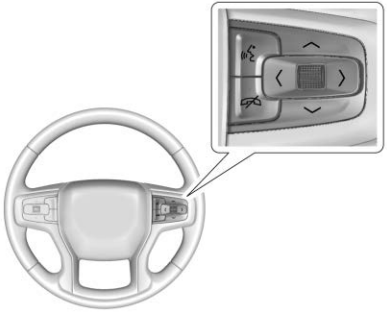

< or > : Press to move left or right between the interactive display zones in the cluster. Press the thumbwheel to select.

∧ or ∨ : Use the thumbwheel to scroll up or down in a list. Press the thumbwheel to select.

Info Page Options

The info pages on the DIC can be turned on or off through the Options menu.

1. Press > to scroll to the Options application.
2. Scroll ∧ or ∨ to choose Info pages and press the thumbwheel.
3. Scroll ∧ or ∨ to move through the list of possible information displays.
4. Press the thumbwheel while an item is highlighted to select or deselect that item.

The info pages can also be turned on or off through the DIC page Info Page Options.

Info Pages

The following is the list of all possible DIC info page displays. Some may not be available for your particular vehicle. Some items may not be turned on by default but can be turned on through the Options app. See “Info Page Options” earlier in this section.

Speed : Shows the vehicle speed in either kilometers per hour (km/h) or miles per hour (mph). The vehicle odometer is also shown on this page. If equipped, press the thumbwheel to open the menu and select to display speed limit signs.

Trip 1 or Trip 2, and Average Fuel Economy : Shows the current distance traveled, in either kilometers (km) or miles (mi), since the trip odometer was last reset.

The Average Fuel Economy display shows the approximate average liters per 100 kilometers (L/100 km) or miles per gallon (mpg). This number is calculated based on the number of L/100 km (mpg) recorded since the last time this menu item was reset. This number reflects only the approximate average fuel economy that the vehicle has right now, and will change as driving conditions change.

Press the thumbwheel while this display is active to reset the trip odometer and the average fuel economy.

Fuel Range : Shows the approximate distance the vehicle can be driven without refueling.

LOW will be displayed when the vehicle is low on fuel. The fuel range estimate is based on an average of the vehicle's fuel economy over recent driving history and the amount of fuel remaining in the fuel tank.

Timer : This display can be used as a timer. To start the timer, press the thumbwheel while this display is active. The display will show the amount of time that has passed since the timer was last reset. To stop the timer, press the thumbwheel briefly while this display is active and the timer is running.

Press the thumbwheel while this display is active to reset the timer.

Oil Life : Shows an estimate of the oil's remaining useful life.
If REMAINING OIL LIFE 99% is displayed, that means 99% of the current oil life remains.

When the remaining oil life is low, the CHANGE ENGINE OIL SOON message will appear on the display. The oil should be changed as soon as possible. See *Engine Oil* ⇨ *325*.

In addition to the engine oil life system monitoring the oil life, additional maintenance is recommended. See *Maintenance Schedule* ⇨ *419*.

The Oil Life display must be reset after each oil change. It will not reset itself. Do not reset the Oil Life display at any time other than when the oil has just been changed.
It cannot be reset accurately until the next oil change. To reset the engine oil life system, press the thumbwheel while the Oil Life display is active. See *Engine Oil Life System* ⇨ *327*.

Tire Pressure : Shows the approximate pressures of all four tires. Tire pressure is displayed in either kilopascal (kPa) or in pounds per square inch (psi). If the pressure is low, the value for that tire is shown in amber. See *Tire Pressure Monitor System* ⇨ *373* and *Tire Pressure Monitor Operation* ⇨ *374*.

Air Filter Life : Shows an estimate of the engine air filter's remaining useful life and the state of the system. Engine Air Filter Life 95% means 95% of the current air filter life remains. Messages will display based on the engine air filter life and the state of the system. When the REPLACE SOON message displays, the engine air filter should be replaced at the earliest convenience.

The Air Filter Life display must be reset after the engine air filter replacement. To reset, see *Engine Air Filter Life System* ⇨ *329*.

Brake Pad Life : This displays an estimate of the remaining life of the front and rear brake pads. Messages will display based on brake pad wear and the state of the system. Reset the Brake Pad Life display after replacing the brake pads. See *Brake Pad Life System* ⇨ *339*.

Fuel Economy : Displays average fuel economy, the best fuel economy over the selected distance, and a bar graph showing instantaneous fuel economy.

Press the thumbwheel to change the selected distance. Press and hold the thumbwheel while this display is active to reset the best fuel economy and average fuel economy. This display can also be reset by selecting reset in the menu.

Engine Hours (Hourmeter) : Shows the total number of hours the engine has run. This display also shows the engine idle hours.

Transmission Fluid Temperature : Shows the temperature of the automatic transmission fluid in either degrees Celsius (°C) or degrees Fahrenheit (°F).

Trailer Brake : On vehicles with the Integrated Trailer Brake Control (ITBC) system, the trailer brake display appears in the DIC.

TRAILER GAIN shows the trailer gain setting. This setting can be adjusted from 0.0 to 10.0 with either a trailer connected or disconnected.

OUTPUT shows the power output to the trailer any time a trailer with electric brakes is connected. Output is displayed as a bar graph. Dotted lines may appear in the OUTPUT display if a trailer is not connected.

Off Road : Displays vehicle pitch and roll information, road wheel angle, and four-wheel drive (4WD) status.

Follow Distance : If equipped, the current follow time to the vehicle ahead is displayed as a time value on this page.

Driver Assistance : If equipped, shows information for Lane Keep Assist (LKA) and Forward Collision Alert (FCA).

Info Page Options : Scroll to choose which info pages appear on the DIC. Press the thumbwheel to select or deselect.

Blank Page : Shows no information.

Head-Up Display (HUD)

⚠ Warning

If the HUD image is too bright or too high in your field of view, it may take you more time to see things you need to see when it is dark outside. Be sure to keep the HUD image dim and placed low in your field of view.

If equipped with HUD, some information about the operation of the vehicle is projected onto the windshield. The image is projected through the HUD lens on top of the instrument panel. The information appears as an image focused out toward the front of the vehicle.

Caution

If you try to use the HUD image as a parking aid, you may misjudge the distance and damage your vehicle. Do not use the HUD image as a parking aid.

The HUD information can be displayed in various languages. The speedometer reading and other numerical values can be displayed in either English or metric units.

The language selection is changed through the radio, and the units of measurement is changed through the instrument cluster. See “Settings” in the infotainment manual and “Options” under *Instrument Cluster* ⇨ *140*.

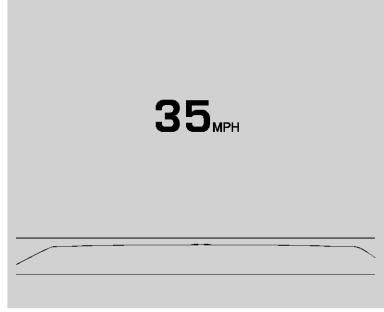

HUD Display on the Windshield

Depending on how the vehicle is equipped, the HUD may display some of the following vehicle information and vehicle messages or alerts:

- Speed
- Audio
- Phone
- Navigation
- Driver Assistance Features
- Vehicle Messages

Some vehicle messages or alerts displayed in the HUD may be cleared by using the steering wheel controls.

The HUD control is to the left of the steering wheel.

To adjust the HUD image:

1. Adjust the driver seat.
2. Start the engine.
3. Use the following settings to adjust the HUD.

HUD : Press or pull to center the HUD image. The HUD image can only be adjusted up and down, not side to side.

INFO : Press to select the display view. Each press will change the display view.

±☼ : Pull and hold to brighten the display. Press and hold to dim the display. Continue to hold to turn the display off.

The HUD image will automatically dim and brighten to compensate for outside lighting. Use ±☼ to adjust as needed.

The HUD image can temporarily light up depending on the angle and position of sunlight on the HUD display. This is normal.

Polarized sunglasses could make the HUD image harder to see.

Head-Up Display (HUD) Rotation Option

If equipped, this feature under the Options menu of the instrument cluster allows for adjusting the angle of the HUD image and changing or turning off the Speed Limit Sign.

HUD Rotation: Press the thumbwheel while Adjust Rotation is highlighted to enter Adjust Mode. Scroll to adjust the angle of the HUD display. Press the thumbwheel to confirm and save the setting. This feature may only be available in P (Park).

Speed Limit Style Adjustment

If equipped, the speed limit style can be changed to a speed limit bar or speed limit sign from the Options menu in the instrument cluster. Press the thumbwheel while Speed Limit Style is highlighted to change the speed sign style or to turn it off.

HUD Views

There are four views in the HUD. Some vehicle information and vehicle messages or alerts may be displayed in any view.

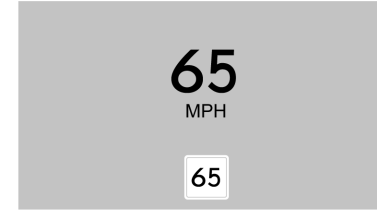

English Shown, Metric Similar

Speed View : This displays the speedometer reading in English or metric units, and speed limit. Some information only appears on vehicles that have these features, and when they are active.

English Shown, Metric Similar

Active Safety View : This displays the speed view along with a driver assistance graphic on the left.

Driver assistance graphics show your vehicle, vehicle ahead, gap setting, and lane status information. In addition to driver assistance graphics, pedestrian advisory and trailer sway indicators will be displayed.

English Shown, Metric Similar

Navigation/Active OnStar View : This displays the speed view along with indicators for vehicle ahead, Lane Departure Warning/Lane Keep Assist, trailer sway, and pedestrian advisory. Turn-by-Turn navigation information is shown during active route. The compass heading is displayed when navigation routing is not active.

Navigation Turn-by-Turn Alerts shown in the instrument cluster may also be displayed in any HUD view.

English Shown, Metric Similar

Off Road View : This displays the speed view along with indicators for vehicle ahead, Lane Departure Warning/Lane Keep Assist, trailer sway, four-wheel drive status, and pedestrian advisory. Off-road information such as pitch angle, steering angle, and rolling angle is also shown.

Care of the HUD

Clean the inside of the windshield to remove any dirt or film that could reduce the sharpness or clarity of the HUD image.

Clean the HUD lens with a soft cloth sprayed with glass cleaner. Wipe the lens gently, then dry it.

HUD Troubleshooting

Check that:

- Nothing is covering the HUD lens.
- The HUD brightness setting is not too dim or too bright.
- The HUD is adjusted to the proper height.
- Polarized sunglasses are not worn.
- The windshield and HUD lens are clean.

If the HUD image is not correct, contact your dealer.

The windshield is part of the HUD system. See *Windshield Replacement* ⇨ *349*.

Vehicle Messages

Messages displayed on the Driver Information Center (DIC) indicate the status of the vehicle or some action that may be needed to correct a condition. Multiple messages may appear one after another.

The messages that do not require immediate action can be acknowledged and cleared by pressing the thumbwheel. The messages that require immediate action cannot be cleared until that action is performed.

All messages should be taken seriously; clearing the message does not correct the problem.

If a SERVICE message appears, see your dealer.

Follow the instructions given in the messages. The system displays messages regarding the following topics:

- Service Messages
- Fluid Levels
- Vehicle Security
- Brakes
- Steering
- Ride Control Systems
- Driver Assistance Systems
- Cruise Control
- Lighting and Bulb Replacement
- Wiper/Washer Systems
- Doors and Windows
- Seat Belts
- Airbag Systems
- Engine and Transmission
- Tire Pressure
- Battery

Engine Power Messages

ENGINE POWER IS REDUCED

This message displays when the vehicle's propulsion power is reduced. A reduction in propulsion power can affect the vehicle's ability to accelerate. If this message is on, but there is no observed reduction in performance, proceed to your destination. The performance may be reduced the next time the vehicle is driven. The vehicle may be driven while this message is on, but maximum acceleration and speed may be reduced. Anytime this message stays on, or displays repeatedly, the vehicle should be taken to your dealer for service as soon as possible.

Vehicle Speed Messages

SPEED LIMITED TO XXX KM/H (MPH)

This message shows that the vehicle speed has been limited to the speed displayed. The limited speed is a protection for various propulsion and vehicle systems, such as lubrication, thermal, suspension, Teen Driver if equipped, or tires.

Vehicle Personalization

The following are all possible vehicle personalization features. Depending on the vehicle, some may not be available.

For System, Apps, and Personal features and functions, see “Settings” in the infotainment manual.

To access the vehicle personalization menu:

1. Touch the SETTINGS icon on the Home Page of the infotainment display.
2. Touch Vehicle to display a list of available options.
3. Touch to select the desired feature setting.
4. Touch ◯ or | to turn a feature off or on.
5. Touch ✕ to go to the top level of the Settings menu.

The menu may contain the following:

Rear Seat Reminder

This allows for a chime and a message when the rear door has been opened before or during operation of the vehicle.

Touch Off or On.

Climate and Air Quality

Touch and the following may display:

- Auto Fan Speed
- Auto Defog
- Auto Rear Defog

Auto Fan Speed

This setting specifies the amount of airflow when the climate control fan setting is Auto Fan.

Touch Low, Medium, or High.

Auto Defog

This setting automatically directs air to the windshield to assist in defogging, based on temperature and humidity conditions.

Touch Off or On.

Auto Rear Defog

This setting automatically turns the rear defogger on based on temperature and humidity conditions.

Touch Off or On.

Collision/Detection Systems

Touch and the following may display:

- Alert Type
- Forward Collision System
- Front Pedestrian Detection
- Lane Change Alert
- Park Assist
- Rear Camera Park Assist Symbols
- Rear Cross Traffic Alert

Alert Type

This feature sets the type of alert from the driver assistance systems to help avoid crashes.

Touch Beeps or Safety Alert Seat.

Forward Collision System

This feature will turn on or off Forward Collision Alert (FCA) and Forward Automatic Braking (FAB). The Off setting disables all FCA and FAB functions. With the Alert and Brake setting, both FCA and FAB are available. The Alert setting disables FAB. See *Forward Automatic Braking (FAB)* ⇨ *267*.

Touch Off, Alert, or Alert and Brake.

Front Pedestrian Detection

This feature may help avoid or reduce the harm caused by front-end crashes with nearby pedestrians. See *Front Pedestrian Braking (FPB) System* ⇨ *268*.

Touch Off, Alert, or Alert and Brake.

Lane Change Alert

This allows the feature to be turned on or off. See *Lane Change Alert (LCA)* ⇨ *271*.

When Lane Change Alert is disabled, Side Blind Zone Alert is also disabled.

Touch Off or On.

Park Assist

This allows the feature to be turned on or off. See *Assistance Systems for Parking or Backing* ⇨ *258*.

Select Off, On, or On with Towbar.

Rear Camera Park Assist Symbols

This setting enables the Rear Camera Park Assist Symbols. See *Assistance Systems for Parking or Backing* ⇨ *258*.

Touch Off or On.

Rear Cross Traffic Alert

This allows the Rear Cross Traffic Alert feature to be turned on or off. See *Assistance Systems for Parking or Backing* ⇨ *258*.

Touch Off or On.

Comfort and Convenience

Touch and the following may display:

- Chime Volume
- Reverse Tilt Mirror
- Remote Mirror Folding

Chime Volume

This determines the chime volume level.

Touch the controls on the infotainment display to adjust the volume.

Reverse Tilt Mirror

This allows the feature to be turned on or off. See *Reverse Tilt Mirrors* ⇨ *60*.

Touch Off, On - Driver and Passenger, On - Driver, or On - Passenger.

Remote Mirror Folding

When on, the outside mirrors will remotely fold or unfold when the Remote Keyless Entry (RKE) transmitter 🔒 or 🔓 button is pressed and held. See *Folding Mirrors* ⇨ *58*.

Touch Off or On.

Lighting

Touch and the following may display:

- Vehicle Locator Lights
- Exit Lighting

Vehicle Locator Lights

This setting flashes the vehicle's headlamps when 🔓 is pressed on the Remote Keyless Entry (RKE) transmitter.

Touch Off or On.

Exit Lighting

This setting specifies how long the headlamps stay on after the vehicle is turned off and exited.

Touch Off, 30 Seconds, 60 Seconds, or 120 Seconds.

Power Door Locks

Touch and the following may display:

- Open Door Anti Lock Out
- Auto Door Unlock
- Delayed Door Lock

Open Door Anti Lock Out

This setting prevents the driver door from locking when the door is open. If this setting is on, the Delayed Door Lock menu will not be available. If this setting is turned off, the Delayed Door Lock menu may not be available until the next ignition cycle.

Touch Off or On.

Auto Door Unlock

This setting allows selection of which doors will automatically unlock when the vehicle is shifted into P (Park).

Touch Off, All Doors, or Driver Door.

Delayed Door Lock

When on, this feature will delay the locking of the doors. To override the delay, press the power door lock switch on the door.

Touch Off or On.

Remote Lock, Unlock, Start

Touch and the following may display:

- Remote Unlock Light Feedback
- Remote Lock Feedback
- Remote Door Unlock
- Remote Start Auto Cool Seats
- Remote Start Auto Heat Seats
- Remote Window Operation
- Passive Door Unlock
- Passive Door Lock
- Remote Left in Vehicle Alert

Remote Unlock Light Feedback

When on, the exterior lamps will flash when unlocking the vehicle with the RKE transmitter.

Touch Off or Flash Lights.

Remote Lock Feedback

This allows selection of what type of feedback is given when locking the vehicle with the RKE transmitter.

Touch Off, Lights and Horn, Lights Only, or Horn Only.

Remote Door Unlock

This allows selection of which doors will unlock when pressing 🔓 on the RKE transmitter.

Touch All Doors or Driver Door.

Remote Start Auto Cool Seats

If equipped and turned on, this feature will turn on the ventilated seats when using remote start on warm days. See *Heated and Ventilated Front Seats* ⇨ *76* and *Remote Vehicle Start* ⇨ *44*.

Touch Off or On.

Remote Start Auto Heat Seats

If equipped and turned on, this feature will turn on the heated seats when using remote start on cold days. See *Heated and Ventilated Front Seats* ⇨ *76* and *Remote Vehicle Start* ⇨ *44*.

Touch Off or On.

Remote Window Operation

If equipped, this feature enables remote operation of the windows with the RKE transmitter. See *Remote Keyless Entry (RKE) System Operation (Keyless Access)* ⇨ *34* or *Remote Keyless Entry (RKE) System Operation (Key Access)* ⇨ *42*.

Touch Off or On.

Passive Door Unlock

This allows the selection of what doors will unlock when using the button on the driver door to unlock the vehicle.

Touch All Doors or Driver Door Only.

Passive Door Lock

This allows passive locking to be turned on or off and selects feedback. See *Remote Keyless Entry (RKE) System Operation (Keyless Access)* ⇨ *34* or *Remote Keyless Entry (RKE) System Operation (Key Access)* ⇨ *42*.

Touch Off, On with Horn Chirp, or On.

Remote Left in Vehicle Alert

This feature sounds an alert when the RKE transmitter is left in the vehicle. This menu also enables Remote No Longer In Vehicle Alert.

Touch Off or On.

Seating Position

Touch and the following may display:

- Seat Entry Memory
- Seat Exit Memory

Seat Entry Memory

This feature automatically recalls the previously stored 1 or 2 button positions when the ignition is changed from off to on or ACC/ACCESSORY. See *Memory Seats* ⇨ *74*.

Touch Off or On.

Seat Exit Memory

This feature automatically recalls the previously stored exit button position when the ignition is changed from on or ACC/ ACCESSORY to off and the driver door is open. See *Memory Seats* ⇨ *74*.

Touch Off or On.

Teen Driver

See “Teen Driver” under “Settings” in the infotainment manual.

Valet Mode

This will lock the infotainment system and steering wheel controls. It may also limit access to vehicle storage locations, if equipped.

To enable valet mode:

1. Enter a four-digit code on the keypad.
2. Select Enter to go to the confirmation screen.
3. Re-enter the four-digit code.

Touch Lock or Unlock to lock or unlock the system. Touch Back to go back to the previous menu.

Universal Remote System

See *Radio Frequency Statement* ⇨ *447*.

Universal Remote System Programming

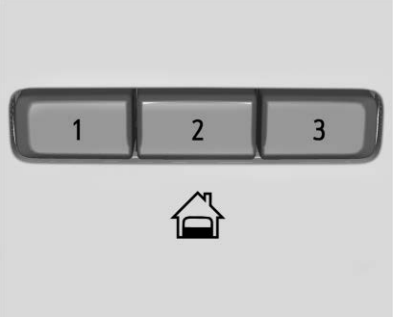

If equipped, these buttons are in the overhead console.

This system can replace up to three remote control transmitters used to activate devices such as garage door openers, security systems, and home automation devices. These

instructions refer to a garage door opener, but can be used for other devices.

Do not use the Universal Remote system with any garage door opener that does not have the stop and reverse feature. This includes any garage door opener model manufactured before April 1, 1982.

Read the instructions completely before programming the Universal Remote system. It may help to have another person assist with the programming process.

Keep the original hand-held transmitter for use in other vehicles as well as for future programming. Erase the programming when vehicle ownership is terminated. See “Erasing Universal Remote System Buttons” later in this section.

To program a garage door opener, park outside directly in line with and facing the garage door opener receiver. Clear all people and objects near the garage door.

Make sure the hand-held transmitter has a new battery for quick and accurate transmission of the radio-frequency signal.

Programming the Universal Remote System

For questions or programming help, see www.homelink.com/gm or call 1-800-355-3515. For calls placed outside the U.S., Canada, or Puerto Rico, international rates will apply and may differ based on landline or mobile phone.

Programming involves time-sensitive actions, and may time out causing the procedure to be repeated.

To program up to three devices:

1. Hold the end of the hand-held transmitter about 3 to 8 cm (1 to 3 in) away from the Universal Remote system buttons with the indicator light in view. The hand-held transmitter was supplied by the manufacturer of the garage door opener receiver.
2. At the same time, press and hold both the hand-held transmitter button and one of the three Universal Remote system buttons to be used to operate the garage door. Do not release either button until the indicator light goes from a slow to a rapid flashing light. Then release both buttons.

   Some garage door openers may require substitution of Step 2 with the procedure under “Radio Signals for Some Gate Operators” later in this section.
3. Press and hold the newly programmed Universal Remote system button for five seconds while watching the indicator light and garage door activation.
   - If the indicator light stays on continuously or the garage door moves when the button is pressed, then programming is complete. There is no need to complete Steps 4–6.

- If the indicator light does not come on or the garage door does not move, a second button press may be required. For a second time, press and hold the newly programmed button for five seconds. If the light stays on or the garage door moves, programming is complete.
- If the indicator light blinks rapidly for two seconds, then changes to a solid light and the garage door does not move, continue with programming Steps 4–6.

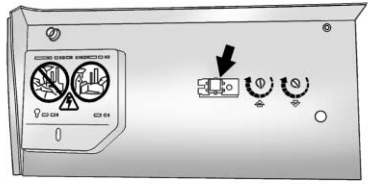

Learn or Smart Button

4. After completing Steps 1–3, locate the Learn or Smart button inside the garage on the garage door opener receiver. The name and color of the button may vary by manufacturer.
5. Press and release the Learn or Smart button. Step 6 must be completed within 30 seconds of pressing this button.
6. Inside the vehicle, press and hold the newly programmed Universal Remote system button for two seconds and then release it. If the garage door does not move or the lamp on the garage door opener receiver does not flash, press and hold the same button a second time for two seconds, then release it. Again, if the door does not move or the garage door lamp does not flash, press and hold the same button a third time for two seconds, then release it.

The Universal Remote system should now activate the garage door.

Repeat the process for programming the two remaining buttons.

Radio Signals for Some Gate Operators

For questions or programming help, see www.homelink.com/gm or call 1-800-355-3515. For calls placed outside the U.S., Canada, or Puerto Rico, international rates will apply and may differ based on landline or mobile phone.

Some radio–frequency laws and gate operators require transmitter signals to time out or quit after several seconds of transmission.

This may not be long enough for the Universal Remote system to pick up the signal during programming.

If the programming did not work, replace Step 2 under “Programming the Universal Remote System” with the following:

Press and hold the Universal Remote system button while pressing and releasing the hand-held transmitter button every two seconds until the signal has been successfully accepted by the Universal Remote system. The Universal Remote system indicator light will flash slowly at first and then rapidly. Proceed with Step 3 under “Programming the Universal Remote System” to complete.

Universal Remote System Operation

Using the Universal Remote System

Press and hold the appropriate Universal Remote system button for at least one-half second. The indicator light will come on while the signal is being transmitted.

Erasing Universal Remote System Buttons

Erase all programmed buttons when vehicle ownership is terminated.

To erase:

1. Press and hold the two outside buttons until the indicator light begins to flash. This should take about 10 seconds.
2. Release both buttons.

Reprogramming a Single Universal Remote System Button

To reprogram any of the system buttons:

1. Press and hold any one of the buttons. Do not release the button.
2. The indicator light will begin to flash after 20 seconds. Without releasing the button, proceed with Step 1 under “Programming the Universal Remote System.”

Lighting

Exterior Lighting
Exterior Lamp Controls 178
Exterior Lamps Off Reminder 180
Headlamp High/Low-Beam Changer 180
Flash-to-Pass 181
Daytime Running Lamps (DRL) 181
Automatic Headlamp System 181
Hazard Warning Flashers 182
Turn and Lane-Change Signals 183
Fog Lamps 183
Task Lighting 184
Exterior Cargo Lamps 184

Interior Lighting
Instrument Panel Illumination Control 185
Dome Lamps 185
Reading Lamps 186

Lighting Features
Entry Lighting 186
Exit Lighting 186
Battery Load Management . . . 187
Battery Power Protection 187
Exterior Lighting Battery Saver 188

Exterior Lighting

Exterior Lamp Controls

The exterior lamp control is on the instrument panel to the left of the steering wheel.

⏻ **:** Turns off the automatic headlamps and Daytime Running Lamps (DRL). Turn the headlamp control to ⏻ again to turn the automatic headlamps or DRL back on.

For vehicles first sold in Canada, off will only work when the vehicle is in P (Park).

AUTO : Automatically turns on the headlamps, parking lamps, taillamps, instrument panel lights, roof marker lamps (if equipped), front/rear sidemarker lamps, and license plate lamps.

: Turns on the parking lamps including all lamps, except the headlamps and fog lamps, if equipped.

: Turns on the headlamps together with the parking lamps, taillamps, instrument panel lights, roof marker lamps (if equipped), front/rear sidemarker lamps, and license plate lamps.

When the headlamps are turned on while the vehicle is on, the headlamps turn off automatically 10 minutes after the ignition is turned off. When the headlamps are turned on while the vehicle is off, the headlamps will stay on for 10 minutes before turning off to prevent the battery from being drained. Turn the headlamp control off and then back to the headlamp on position to make the headlamps stay on for an additional 10 minutes. To keep the lamps on for more than 10 minutes, the ignition must be on or in ACC/ACCESSORY.

: If equipped, turns on the task lighting. See *Task Lighting* ⇨ *184*.

IntelliBeam System

If equipped, this system turns the vehicle's high-beam headlamps on and off according to surrounding traffic conditions.

The system turns the high-beam headlamps on when it is dark enough and there is no other traffic present.

This light comes on in the instrument cluster when the IntelliBeam system is enabled.

Turning On and Enabling IntelliBeam

To enable the IntelliBeam system, press the button on the end of the turn signal lever when the exterior lamp control is in the AUTO or position. The blue high-beam on light appears on the instrument cluster when the high beams are on.

Driving with IntelliBeam

The system only activates the high beams when driving over 40 km/h (25 mph).

There is a sensor near the top center of the windshield that automatically controls the system.

Keep this area of the windshield clear of debris to allow for best system performance.

The high-beam headlamps remain on, under the automatic control, until one of the following situations occurs:

- The system detects an approaching vehicle's headlamps.
- The system detects a preceding vehicle's taillamps.
- The outside light is bright enough that high-beam headlamps are not required.
- The vehicle's speed drops below 20 km/h (12 mph).
- The IntelliBeam system is disabled by the button on the turn signal lever. If this happens, press the button on the end of the turn signal lever when the exterior lamp control is in the AUTO or position. The instrument cluster light will come on to indicate the IntelliBeam is reactivated. See *Headlamp High/Low-Beam Changer* ⇨ *180* and *Flash-to-Pass* ⇨ *181*.

The high beams may not turn off automatically if the system cannot detect another vehicle's lamps because of any of the following:

- The other vehicle's lamps are missing, damaged, obstructed from view, or otherwise undetected.
- The other vehicle's lamps are covered with dirt, snow, and/or road spray.
- The other vehicle's lamps cannot be detected due to dense exhaust, smoke, fog, snow, road spray, mist, or other airborne obstructions.
- The vehicle's windshield is dirty, cracked, or obstructed by something that blocks the view of the light sensor.
- The vehicle is loaded such that the front end points upward, causing the light sensor to aim high and not detect headlamps and taillamps.
- Driving on winding or hilly roads.

The automatic high-beam headlamps may need to be disabled if any of the above conditions exist.

Exterior Lamps Off Reminder

A reminder chime sounds when the headlamps or parking lamps are manually turned on, the ignition is off, and a door is open. To disable the chime, turn the lamps off.

Headlamp High/ Low-Beam Changer

Push the turn signal lever toward the instrument panel to change the headlamps from low to high beam.

Pull or push the turn signal lever to return to low-beam headlamps.

When the high-beam headlamps are on, this indicator light on the instrument cluster will also be on.

Flash-to-Pass

This feature lets you use the high-beam headlamps to signal a driver in front of you that you want to pass. It works even if the headlamps are in the automatic position.

To use it, pull the turn signal lever toward you, then release it.

If the headlamps are in the automatic position or on low beam, the high-beam headlamps will turn on. Depending on the type of headlamp, they will either turn off after a short duration or stay on as long as you hold the lever toward you. The high-beam indicator on the instrument cluster will come on. Release the lever to return to normal operation.

Daytime Running Lamps (DRL)

DRL can make it easier for others to see the front of the vehicle during the day. Fully functional DRL are required on all vehicles first sold in Canada.

The DRL system comes on when the following conditions are met:

- The ignition is on.
- The exterior lamp control is in AUTO.
- The transmission is not in P (Park).
- The light sensor determines it is daytime.

When the DRL system is on, only the DRL are on. The taillamps, sidemarker lamps, instrument panel lights, and other lamps will not be on.

When it begins to get dark, the automatic headlamp system switches from DRL to the headlamps.

To turn off the DRL, turn the exterior lamp control to ⏻ and then release. For vehicles first sold in Canada, off will only work when the vehicle is parked.

Automatic Headlamp System

When the exterior lamp control is set to AUTO and it is dark enough outside, the headlamps come on automatically.

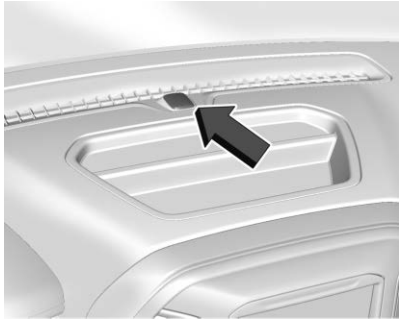

There is a light sensor on top of the instrument panel. Do not cover the sensor, otherwise the headlamps will come on when they are not needed.

The system may also turn on the headlamps when driving through a parking garage or tunnel.

If the vehicle is started in a dark garage, the automatic headlamp system comes on immediately. If it is light outside when the vehicle leaves the garage, there is a slight delay before the automatic headlamp system changes to the Daytime Running Lamps (DRL). During that delay, the instrument cluster may not be as bright as usual. Make sure the instrument panel illumination control is in the full bright position. See *Instrument Panel Illumination Control* ⇨ *185*.

When it is bright enough outside, the headlamps will turn off or may change to DRL.

The automatic headlamp system turns off when the exterior lamp control is turned to ⏻ or the ignition is off.

Lights On with Wipers

If the windshield wipers are activated in daylight with the engine on, and the exterior lamp control is in AUTO, the headlamps, parking lamps, and other exterior lamps come on. The transition time for the lamps coming on varies based on wiper speed. When the wipers are not operating, these lamps turn off.

Move the exterior lamp control to ⏻ or ≋ to disable this feature.

Hazard Warning Flashers

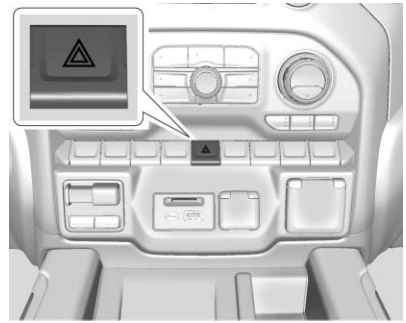

⚠ **:** Press this button to make the front and rear turn signal lamps flash on and off. Press again to turn the flashers off.

When the hazard warning flashers are on, the vehicle's turn signals will not work.

Turn and Lane-Change Signals

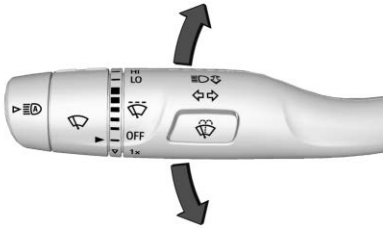

An arrow on the instrument cluster flashes in the direction of the turn or lane change.

Move the turn signal lever all the way up or down to signal a turn.

Partially raise or lower the lever for less than one second until the arrow starts to flash to signal a lane change. This causes the turn signals to automatically flash three times. It will flash six times if Tow/Haul Mode is active. Holding the turn signal lever for more than one second will cause the turn signals to flash until the lever is released.

The lever returns to its starting position whenever it is released.

If after signaling a turn or a lane change the arrows flash rapidly or do not come on, a signal bulb could be burned out. If equipped with LED turn signals, see your dealer.

Replace any burned out bulbs. If a bulb is not burned out, check the fuse. See *Fuses and Circuit Breakers* ⇨ *354*.

Turn Signal On Chime

If the turn signal is left on for more than 1.2 km (0.75 mi), a chime sounds at each flash of the turn signal. A message may appear in the Driver Information Center (DIC). See *Vehicle Messages* ⇨ *169*. To turn the chime and message off, move the turn signal lever to the off position.

Fog Lamps

If equipped, the fog lamp control is near the exterior lamp control to the left of the steering column.

The ignition must be on for the fog lamps to come on.

: Press to turn the fog lamps on or off. A light will come on in the instrument cluster.

When the fog lamps are turned on, the parking lamps automatically turn on.

When the headlamps are changed to high beam, the fog lamps also go off. When the high-beam headlamps are turned off, the fog lamps will come on again.

Some localities have laws that require the headlamps to be on with the fog lamps.

Task Lighting

If equipped, task lighting projects light from the outside mirrors to the sides of the vehicle.

While the vehicle is parked, press to select one of the following options:

- Left and Right Task Lights Illuminated
- Left Task Light Illuminated
- Right Task Light Illuminated
- Left and Right Task Lights Off

If the vehicle leaves a parked position, the lights will immediately turn off.

If the vehicle is off, the lights will stay on for approximately 10 minutes.

Exterior Cargo Lamps

The cargo lamps provide more light in the cargo area or on the sides of the vehicle, if needed. The lamps inside the pickup box, in the tailgate handle, for the hitch, and/or the cargo mirror lamps also turn on, if equipped.

Press the button once to turn on the cargo lamps and cargo mirror lamps. An indicator light will come on when the lamps are turned on, if equipped. The shift lever must be in P (Park), R (Reverse), or N (Neutral) to operate the cargo lamps and cargo mirror lamps.

Press the button again within five seconds to turn the cargo mirror lamps off. The cargo lamps will remain on.

Press the button again to turn off all the cargo lamps.

Become familiar with and follow all state and local laws that apply to cargo lamp operation.

Interior Lighting

Instrument Panel Illumination Control

This feature controls the brightness of the steering wheel and instrument panel lights. The instrument panel illumination control is next to the exterior lamp control.

: Press + to brighten or − to dim the lights.

Dome Lamps

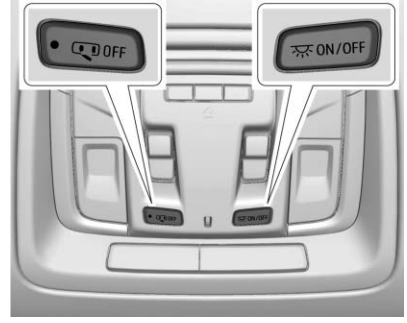

The dome lamp controls are in the overhead console.

To operate, press the following buttons:

OFF : Press to turn off the dome lamps when a door is open. An indicator light on the button will turn on when the dome lamp override is activated. Press OFF again to deactivate this feature and the indicator light will turn off. The dome lamps will come on when doors are opened.

ON/OFF : Press to turn the dome lamps on manually. Press again to turn the dome lamps off.

Reading Lamps

There are reading lamps on the overhead console and over the rear seats. These lamps come on when any door is opened.

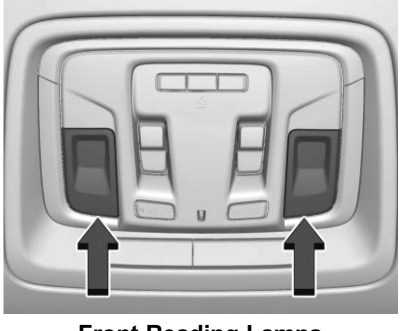

Front Reading Lamps

The front reading lamps are in the overhead console.

Press the lamp lenses to turn the front reading lamps on or off.

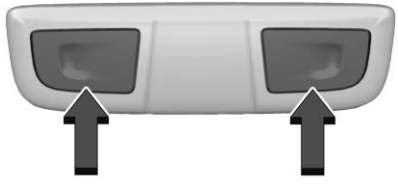

Rear Reading Lamps

The rear reading lamps are over the rear seats.

Press the lamp lens to turn the rear reading lamps on or off.

Lighting Features

Entry Lighting

Some exterior lamps and the interior lamps turn on briefly at night, or in areas with limited lighting, when 🔓 is pressed on the Remote Keyless Entry (RKE) transmitter. When a door is opened, the interior lamps come on. After about 30 seconds the exterior lamps turn off. Entry lighting can be disabled manually by changing the ignition out of the OFF position, or by pressing the RKE transmitter 🔓 button.

This feature can be changed. See “Vehicle Locator Lights” under *Vehicle Personalization* ⇨ *170*.

Exit Lighting

Some exterior lamps and interior lights come on at night, or in areas with limited lighting, when the driver door is opened after the ignition is turned off. The dome lamp comes on after the ignition is turned off.

The exterior lamps and dome lamp remain on for a set amount of time, then automatically turn off.

The exterior lamps turn off immediately by turning the exterior lamp control off.

This feature can be changed. See *Vehicle Personalization* ⇨ *170*.

Battery Load Management

The vehicle has Electric Power Management (EPM), which estimates the battery's temperature and state of charge. It then adjusts the voltage for best performance and extended life of the battery.

When the battery's state of charge is low, the voltage is raised slightly to quickly bring the charge back up. When the state of charge is high, the voltage is lowered slightly to prevent overcharging. The voltmeter gauge or the voltage display on the Driver Information Center (DIC), if equipped, may show the voltage moving up or down. This is normal. If there is a problem, an alert will be displayed.

The battery can be discharged at idle if the electrical loads are very high. This is true for all vehicles. This is because the generator (alternator) may not be spinning fast enough at idle to produce all the power that is needed for very high electrical loads.

A high electrical load occurs when several of the following are on, such as: headlamps, high beams, fog lamps, rear window defogger, climate control fan at high speed, heated seats, engine cooling fans, trailer loads, and loads plugged into accessory power outlets.

EPM works to prevent excessive discharge of the battery. It does this by balancing the generator's output and the vehicle's electrical needs. It can increase engine idle speed to generate more power, whenever needed. It can temporarily reduce the power demands of some accessories.

Normally, these actions occur in steps or levels, without being noticeable. In rare cases at the highest levels of corrective action, this action may be noticeable to the driver. If so, a DIC message might be displayed and it is recommended that the driver reduce the electrical loads as much as possible.

Battery Power Protection

This feature shuts off the dome and reading lamps, if they are left on for more than 10 minutes after the ignition is turned off. The cargo lamp shuts off after 20 minutes. This prevents the battery from running down.

Exterior Lighting Battery Saver

The exterior lamps turn off about 10 minutes after the ignition is turned off, if the parking lamps or headlamps have been manually left on. This protects against draining the battery. To restart the 10-minute timer, turn the exterior lamp control to the ⏻ position and then back to the ≡DO≡ or ≡D position.

To keep the lamps on for more than 10 minutes, the ignition must be on or in ACC/ACCESSORY.

Infotainment System

Introduction
Infotainment 189

Introduction

Infotainment

See the infotainment manual for information on the radio, audio players, phone, navigation system, and voice or speech recognition. It also includes information on settings.

Active Noise Cancellation (ANC)

If equipped, ANC reduces engine noise in the vehicle's interior. ANC requires the factory-installed audio system, radio, speakers, amplifier (if equipped), induction system, and exhaust system to work properly. Deactivation is required by your dealer if related aftermarket equipment is installed.

Climate Controls

Climate Control Systems
Climate Control Systems 190
Dual Automatic Climate Control System 192

Air Vents
Air Vents 196

Maintenance
Passenger Compartment Air Filter 196
Service 197

Climate Control Systems

The heating, cooling, and ventilation in the vehicle can be controlled with this system.

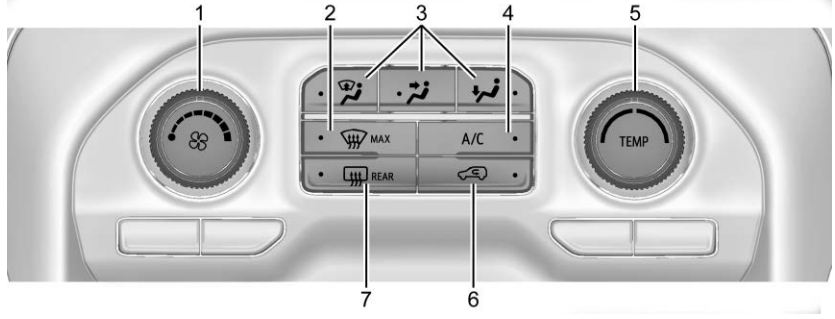

1. Fan Control
2. MAX Defrost
3. Air Delivery Mode Controls
4. A/C (Air Conditioning)
5. TEMP (Temperature Control)
6. Recirculation
7. Rear Window Defogger (If Equipped)

: Turn clockwise or counterclockwise to increase or decrease the fan speed. Turn the knob all the way counterclockwise to turn the fan off.

TEMP : Turn clockwise or counterclockwise to increase or decrease the temperature inside the vehicle.

Air Delivery Mode Controls : Press , , or to change the direction of the airflow. Any combination of the three controls can be selected. An indicator light comes on in the selected mode button.

To change the current mode, select one or more of the following. An indicator light will illuminate:

: Air is directed to the windshield, outboard a/c outlets, and side window outlets.

: Air is directed to the a/c outlets.

: Air is directed to the floor outlets, with some air directed to the windshield, outboard a/c outlets, and side window outlets.

MAX : Air is directed to the windshield and the fan runs at a higher speed if not already above a medium fan speed. This mode overrides the previous mode selected and clears fog or frost from the windshield more quickly. When the control is pressed again, the system returns to the previous mode setting and fan speed.

For best results, clear all snow and ice from the windshield before defrosting.

: Press to turn on recirculation. An indicator light comes on. Air is recirculated to quickly cool the inside of the vehicle. It can also be used to help reduce outside air and odors that enter the vehicle. The indicator light will also go on and off when the system automatically goes into and out of recirculation mode to operate more efficiently.

Avoid using recirculation for long periods of time in cold or damp conditions. Using recirculation in cold or damp conditions can result in window fogging.

A/C : Press to turn the air conditioning on or off. An indicator light comes on to show that the air conditioning is enabled. If the fan is turned off, the air conditioner will not run. The A/C light will stay on even if the outside temperatures are below freezing.

Rear Window Defogger

REAR : If equipped, press to turn the rear window defogger on or off. An indicator light on the button comes on to show that the rear window defogger is on.

The rear window defogger only works when the engine is running. The defogger turns off if the ignition is turned off or to ACC/ ACCESSORY.

If equipped with heated outside mirrors, press REAR to turn them on or off. See *Heated Mirrors* ⇨ *59*.

Caution

Using a razor blade or sharp object to clear the inside rear window can damage the rear window defogger. Repairs would not be covered by the vehicle warranty. Do not clear the inside rear window with sharp objects.

Dual Automatic Climate Control System

The heating, cooling, and ventilation in the vehicle can be controlled with this system.

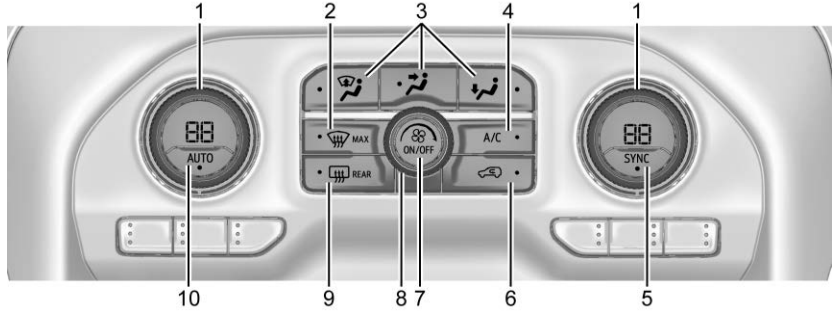

1. Driver and Passenger Temperature Controls
2. MAX Defrost
3. Air Delivery Mode Controls
4. A/C (Air Conditioning)
5. SYNC (Synchronized Temperature)
6. Recirculation
7. Power Button
8. Fan Control
9. Rear Window Defogger (If Equipped)
10. AUTO (Automatic Operation)

Climate Control Display

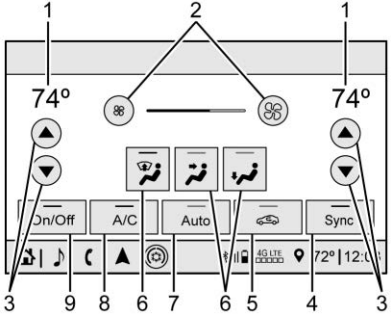

1. Driver and Passenger Temperature Settings
2. Fan Control
3. Driver and Passenger Temperature Controls
4. Sync (Synchronized Temperature)
5. Recirculation
6. Air Delivery Mode Controls
7. Auto (Automatic Operation)
8. A/C (Air Conditioning)
9. On/Off (Power)

The fan, air delivery mode, air conditioning, driver and passenger temperatures, and Sync settings can be controlled by touching CLIMATE on the infotainment Home Page or the climate button in the climate control display application tray. A selection can then be made on the front climate control page displayed. See the infotainment manual.

Climate Control Status Display

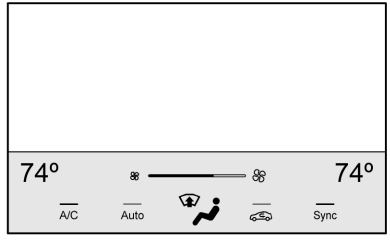

The climate control status display appears briefly when the center stack climate controls are adjusted.

Automatic Operation

The system automatically controls the fan speed, air delivery, air conditioning, and recirculation in order to heat or cool the vehicle to the desired temperature.

When AUTO is lit, all four functions operate automatically. Each function can also be manually set and the selected setting is displayed. Functions not manually set will continue to be automatically controlled, even if the AUTO indicator is not lit.

For automatic operation:

1. Press AUTO.
2. Set the temperature. Allow the system time to stabilize. Adjust the temperature as needed for best comfort.

To improve fuel efficiency and to cool the vehicle faster, recirculation may be automatically selected in warm weather.

The recirculation light will not come on when automatically controlled. See under “Manual Operation” for more details.

Manual Operation

: Turn clockwise or counterclockwise to increase or decrease the fan speed. Press the knob to turn the fan off. When off is selected, a small amount of air may still come out of the outlets depending on vehicle speed. If any buttons are pressed or knobs are turned, the climate control system will turn on and operate at the current setting.

Press AUTO to return to automatic operation.

Driver and Passenger Temperature Control : The temperature can be adjusted separately for the driver and passenger.

Turn the knob clockwise or counterclockwise to increase or decrease the driver or passenger temperature setting. The driver side or passenger side temperature display shows the temperature setting increasing or decreasing.

SYNC : Press to link the passenger temperature setting to the driver setting. The SYNC indicator light will turn on. When the passenger setting is adjusted, the SYNC indicator light will turn off.

Air Delivery Mode Control : Press , , or to change the direction of the airflow. Any combination of the three controls can be selected. An indicator light comes on in the selected mode button.

Changing the mode cancels the automatic operation and the system goes into manual mode. Press AUTO to return to automatic operation.

To change the current mode, select one or more of the following:

: Air is directed to the windshield, outboard a/c outlets, and side window outlets.

: Air is directed to the a/c outlets.

: Air is directed to the floor outlets, with some air directed to the windshield, outboard a/c outlets, and side window outlets.

MAX : Air is directed to the windshield and the fan runs at a higher speed if not already above a medium fan speed. This mode overrides the previous mode selected and clears fog or frost from the windshield more quickly. When the control is pressed again, the system returns to the previous mode setting and fan speed.

For best results, clear all snow and ice from the windshield before defrosting.

: Press to turn on recirculation. An indicator light comes on. Air is recirculated to quickly cool the inside of the vehicle. It can also be used to help reduce outside air and odors that enter the vehicle.

Avoid using recirculation for long periods of time in cold or damp conditions. Using recirculation in cold or damp conditions can result in window fogging.

A/C : Press to turn the air conditioning on or off. An indicator light comes on to show that the air conditioning is enabled. If the fan is turned off, the air conditioner will not run. The A/C light will stay on even if the outside temperatures are below freezing.

Rear Window Defogger

REAR : If equipped, press to turn the rear window defogger on or off. An indicator light on the button comes on to show that the rear window defogger is on.

The rear window defogger only works when the engine is running. The defogger turns off if the ignition is turned off or to ACC/ ACCESSORY.

If equipped with heated outside mirrors, press REAR to turn them on or off. See *Heated Mirrors* ⇨ *59*.

Caution

Using a razor blade or sharp object to clear the inside rear window can damage the rear window defogger. Repairs would not be covered by the vehicle warranty. Do not clear the inside rear window with sharp objects.

Remote Start Climate Control Operation : If equipped with remote start, the climate control system may run when the vehicle is started remotely. If equipped with heated or ventilated seats or a heated steering wheel, these features may come on during a remote start. See *Remote Vehicle Start* ⇨ *44*, *Heated and Ventilated Front Seats* ⇨ *76*, and *Heated Steering Wheel* ⇨ *133*.

Sensors

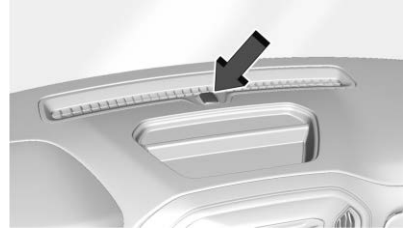

The solar sensor, on top of the instrument panel near the windshield, monitors the solar heat.

The climate control system uses the sensor information to adjust the temperature, fan speed, recirculation, and air delivery mode for best comfort.

Do not cover the sensor; otherwise the automatic climate control system may not work properly.

Air Vents

Use the sliding knobs on the center and side air vents to change the direction of the airflow.

Air vents blow warm air on the side windows in cold weather. If Floor, Defog, or Defrost modes are selected, a small amount of air will come from the vents close to the window.

To close the front a/c vents, move the sliding knobs to the full down position.

To close the rear a/c vents, move the sliding knobs to the full inboard position.

Operation Tips

- Clear away any ice, snow, or leaves from air inlets at the base of the windshield that could block the flow of air into the vehicle.
- Clear snow off the hood to improve visibility and help decrease moisture drawn into the vehicle.
- Keep the path under the front seats clear of objects to help circulate the air inside of the vehicle more effectively.
- Use of non-GM approved hood deflectors can adversely affect the performance of the system. Check with your dealer before adding equipment to the outside of the vehicle.

Maintenance

Passenger Compartment Air Filter

The filter reduces the dust, pollen, and other airborne irritants from outside air that is pulled into the vehicle.

The filter should be replaced as part of routine scheduled maintenance. See *Maintenance Schedule* ⇨ *419*. To find out what type of filter to use, see *Maintenance Replacement Parts* ⇨ *431*.

1. Open the lower glove box door completely.

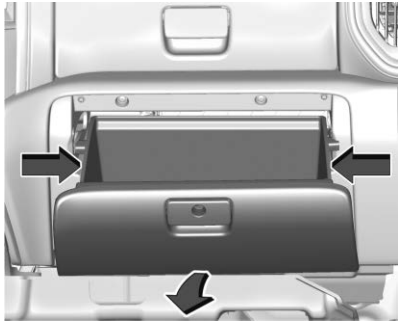

2. Press the sides of the glove box door inward and rotate the door downward to remove.

3. Pull lever on left side of the filter door and slide left, then remove the door. Remove the old filter.
4. Install the new air filter.
5. Reinstall the filter door.
6. Reverse the steps to reinstall the glove box.

See your dealer if additional assistance is needed.

Service

All vehicles have a label underhood that identifies the refrigerant used in the vehicle. The refrigerant system should only be serviced by trained and certified technicians. The air conditioning evaporator should never be repaired or replaced by one from a salvage vehicle.
It should only be replaced by a new evaporator to ensure proper and safe operation.

During service, all refrigerants should be reclaimed with proper equipment. Venting refrigerants directly to the atmosphere is harmful to the environment and may also create unsafe conditions based on inhalation, combustion, frostbite, or other health-based concerns.

The air conditioning system requires periodic maintenance. See *Maintenance Schedule* ⇨ *419*.

Driving and Operating

Driving Information
Distracted Driving 199
Defensive Driving 200
Drunk Driving 200
Control of a Vehicle 200
Braking 200
Steering 201
Off-Road Recovery 201
Loss of Control 202
Off-Road Driving 202
Driving on Wet Roads 207
Hill and Mountain Roads 208
Winter Driving 208
If the Vehicle Is Stuck 210
Vehicle Load Limits 211
Truck-Camper Loading Information 216

Starting and Operating
New Vehicle Break-In 218
Ignition Positions (Key Access) 219
Ignition Positions (Keyless Access) 221
Starting the Engine 223
Stop/Start System 224
Engine Heater 225
Retained Accessory Power (RAP) 227
Shifting Into Park 227
Shifting out of Park 229
Parking over Things That Burn 229
Active Fuel Management 229
Extended Parking 230

Engine Exhaust
Engine Exhaust 230
Running the Vehicle While Parked 231

Automatic Transmission
Automatic Transmission 231
Manual Mode 234
Tow/Haul Mode 237

Drive Systems
Four-Wheel Drive 238

Brakes
Antilock Brake System (ABS) 243
Electric Parking Brake 244
Brake Assist 245
Hill Start Assist (HSA) 246

Ride Control Systems
Traction Control/Electronic Stability Control 246
Hill Descent Control (HDC) . . . 248
Driver Mode Control 249
Limited-Slip Differential 254
Locking Rear Axle 254

Cruise Control
Cruise Control 254

Driver Assistance Systems
Driver Assistance Systems . . . 257
Assistance Systems for Parking or Backing 258
Assistance Systems for Driving 264
Forward Collision Alert (FCA) System 264
Forward Automatic Braking (FAB) 267
Front Pedestrian Braking (FPB) System 268
Side Blind Zone Alert (SBZA) 270
Lane Change Alert (LCA) 271
Lane Departure Warning (LDW) 273
Lane Keep Assist (LKA) 273

Fuel
Top Tier Fuel 275
Recommended Fuel (Except 6.2L V8 Engine) 275
Recommended Fuel (6.2L V8 Engine) 275
Prohibited Fuels 276
Fuels in Foreign Countries . . . 276
Fuel Additives 276
E85 or FlexFuel 276
Filling the Tank 277
Filling a Portable Fuel Container 279

Trailer Towing
General Towing Information 280
Driving Characteristics and Towing Tips 280
Trailer Towing 285
Towing Equipment 289
Trailer Sway Control (TSC) . . . 298
Trailering App 300

Conversions and Add-Ons
Add-On Electrical Equipment 310
Adding a Snow Plow or Similar Equipment 311
Pickup Conversion to Chassis Cab 314

Driving Information

Distracted Driving

Distraction comes in many forms and can take your focus from the task of driving. Exercise good judgment and do not let other activities divert your attention away from the road. Many local governments have enacted laws regarding driver distraction. Become familiar with the local laws in your area.

To avoid distracted driving, keep your eyes on the road, keep your hands on the steering wheel, and focus your attention on driving.

- Do not use a phone in demanding driving situations. Use a hands-free method to place or receive necessary phone calls.
- Watch the road. Do not read, take notes, or look up information on phones or other electronic devices.
- Designate a front seat passenger to handle potential distractions.
- Become familiar with vehicle features before driving, such as programming favorite radio stations and adjusting climate control and seat settings. Program all trip information into any navigation device prior to driving.
- Wait until the vehicle is parked to retrieve items that have fallen to the floor.
- Stop or park the vehicle to tend to children.
- Keep pets in an appropriate carrier or restraint.
- Avoid stressful conversations while driving, whether with a passenger or on a cell phone.

⚠ Warning

Taking your eyes off the road too long or too often could cause a crash resulting in injury or death. Focus your attention on driving.

Refer to the infotainment manual for more information on using that system and the navigation system, if equipped, including pairing and using a cell phone.

Defensive Driving

Defensive driving means “always expect the unexpected.” The first step in driving defensively is to wear the seat belt. See *Seat Belts* ⇨ *80*.

- Assume that other road users (pedestrians, bicyclists, and other drivers) are going to be careless and make mistakes. Anticipate what they might do and be ready.
- Allow enough following distance between you and the driver in front of you.
- Focus on the task of driving.

Drunk Driving

Death and injury associated with drinking and driving is a global tragedy.

⚠ Warning

Drinking and then driving is very dangerous. Your reflexes, perceptions, attentiveness, and judgment can be affected by even a small amount of alcohol. You can have a serious — or even fatal — collision if you drive after drinking.

Do not drink and drive or ride with a driver who has been drinking. Ride home in a cab; or if you are with a group, designate a driver who will not drink.

Control of a Vehicle

Braking, steering, and accelerating are important factors in helping to control a vehicle while driving.

Braking

Braking action involves perception time and reaction time. Deciding to push the brake pedal is perception time. Actually doing it is reaction time.

Average driver reaction time is about three-quarters of a second. In that time, a vehicle moving at 100 km/h (60 mph) travels 20 m (66 ft), which could be a lot of distance in an emergency.

Helpful braking tips to keep in mind include:

- Keep enough distance between you and the vehicle in front of you.
- Avoid needless heavy braking.
- Keep pace with traffic.

If the engine ever stops or a brake fault occurs, the brakes may lose power assist. More effort will be required to stop the vehicle. It may take longer to stop.

Steering

Electric Power Steering

This vehicle has electric power steering. It does not have power steering fluid. Regular maintenance is not required.

If power steering assist is lost due to a system malfunction, the vehicle can be steered, but may require increased effort.

See your dealer if there is a problem.

If the steering assist is used for an extended period of time while the vehicle is not moving, power assist may be reduced.

If the steering wheel is turned until it reaches the end of its travel, and is held in that position for an extended period of time, power steering assist may be reduced.

Normal use of the power steering assist should return when the system cools down.

See your dealer if there is a problem.

Curve Tips

- Take curves at a reasonable speed.
- Reduce speed before entering a curve.
- Maintain a reasonable steady speed through the curve.
- Wait until the vehicle is out of the curve before accelerating gently into the straightaway.

Steering in Emergencies

- There are some situations when steering around a problem may be more effective than braking.
- Holding both sides of the steering wheel allows you to turn 180 degrees without removing a hand.
- Antilock Brake System (ABS) allows steering while braking.

Off-Road Recovery

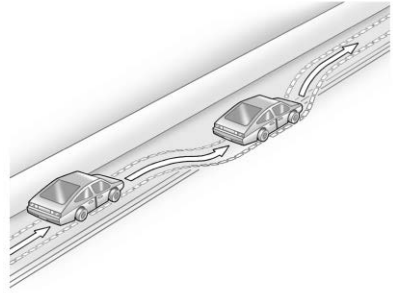

The vehicle's right wheels can drop off the edge of a road onto the shoulder while driving. Follow these tips:

1. Ease off the accelerator and then, if there is nothing in the way, steer the vehicle so that it straddles the edge of the pavement.
2. Turn the steering wheel about one-eighth of a turn, until the right front tire contacts the pavement edge.

3. Turn the steering wheel to go straight down the roadway.

Loss of Control

Skidding

There are three types of skids that correspond to the vehicle's three control systems:

- Braking Skid — wheels are not rolling.
- Steering or Cornering Skid — too much speed or steering in a curve causes tires to slip and lose cornering force.
- Acceleration Skid — too much throttle causes the driving wheels to spin.

Defensive drivers avoid most skids by taking reasonable care suited to existing conditions, and by not overdriving those conditions. But skids are always possible.

If the vehicle starts to slide, follow these suggestions:

- Ease your foot off the accelerator pedal and steer the way you want the vehicle to go. The vehicle may straighten out. Be ready for a second skid if it occurs.
- Slow down and adjust your driving according to weather conditions. Stopping distance can be longer and vehicle control can be affected when traction is reduced by water, snow, ice, gravel, or other material on the road. Learn to recognize warning clues — such as enough water, ice, or packed snow on the road to make a mirrored surface — and slow down when you have any doubt.
- Try to avoid sudden steering, acceleration, or braking, including reducing vehicle speed by shifting to a lower gear. Any sudden changes could cause the tires to slide.

Remember: Antilock brakes help avoid only the braking skid.

Off-Road Driving

Four-wheel-drive vehicles can be used for off-road driving. Vehicles without four-wheel drive and vehicles not equipped with All Terrain (AT) or On-Off Road (OOR) tires must not be driven off-road except on a level, solid surface. For contact information about the original equipment tires, see the warranty manual.

One of the best ways for successful off-road driving is to control the speed.

⚠ Warning

When driving off-road, bouncing and quick changes in direction can easily throw you out of position. This could cause you to lose control and crash. You and your passengers should always wear seat belts.

Before Driving Off-Road

- Have all necessary maintenance and service work completed.
- Fuel the vehicle, fill fluid levels, and check inflation pressure in all tires, including the spare, if equipped.
- Read all the information about four-wheel-drive vehicles in this manual.
- Remove any underbody air deflector, if equipped. Re-attach the air deflector after off-road driving.
- Know the local laws that apply to off-road driving.

To gain more ground clearance if needed, it may be necessary to remove the front fascia lower air dam, if equipped. However, driving without the air dam reduces fuel economy.

Caution

Operating the vehicle for extended periods without the front fascia lower air dam installed can cause improper airflow to the engine. Reattach the front fascia air dam after off-road driving.

Loading the Vehicle for Off-Road Driving

⚠ Warning

- Unsecured cargo on the load floor can be tossed about when driving over rough terrain. You or your passengers can be struck by flying objects. Secure the cargo properly.
- Keep cargo in the cargo area as far forward and as low as possible. The

(Continued)

Warning (Continued)

heaviest things should be on the floor, forward of the rear axle.

- Heavy loads on the roof raise the vehicle's center of gravity, making it more likely to roll over. You can be seriously or fatally injured if the vehicle rolls over. Put heavy loads inside the cargo area, not on the roof.

For more information about loading the vehicle, see *Vehicle Load Limits* ⇨ *211* and *Tires* ⇨ *362*.

Environmental Concerns

- Always use established trails, roads, and areas that have been set aside for public off-road recreational driving and obey all posted regulations.
- Do not damage shrubs, flowers, trees, or grasses or disturb wildlife.

- Do not park over things that burn. See *Parking over Things That Burn* ⇨ *229*.

Driving on Hills

Driving safely on hills requires good judgment and an understanding of what the vehicle can and cannot do.

> **⚠ Warning**
>
> Many hills are simply too steep for any vehicle. Driving up hills can cause the vehicle to stall. Driving down hills can cause loss of control. Driving across hills can cause a rollover. You could be injured or killed. Do not drive on steep hills.

Before driving on a hill, assess the steepness, traction, and obstructions. If the terrain ahead cannot be seen, get out of the vehicle and walk the hill before driving further.

When driving on hills:

- Use a low gear and keep a firm grip on the steering wheel.
- Maintain a slow speed.
- When possible, drive straight up or down the hill.
- Slow down when approaching the top of the hill.
- Use headlamps even during the day to make the vehicle more visible.

> **⚠ Warning**
>
> Driving to the top of a hill at high speed can cause a crash. There could be a drop-off, embankment, cliff, or even another vehicle. You could be seriously injured or killed. As you near the top of a hill, slow down and stay alert.

- Never go downhill forward or backward with either the transmission or transfer case in N (Neutral). The brakes could overheat and you could lose control.

> **⚠ Warning**
>
> If the vehicle has the two-speed automatic transfer case, shifting the transfer case to N (Neutral) can cause your vehicle to roll even if the transmission is in P (Park). This is because the N (Neutral) position on the transfer case overrides the transmission. You or someone else could be injured. If leaving the vehicle, set the parking brake and shift the transmission to P (Park). Shift the transfer case to any position but N (Neutral).

- When driving down a hill, keep the vehicle headed straight down. Use a low gear because the engine will work with the brakes to slow the vehicle and help keep the vehicle under control.

⚠ Warning

Heavy braking when going down a hill can cause your brakes to overheat and fade. This could cause loss of control and you or others could be injured or killed. Apply the brakes lightly when descending a hill and use a low gear to keep vehicle speed under control.

If a brake fade condition is detected, a DIC warning message is displayed. Adjust brake pedal use and shift to a lower transmission gear to reduce braking.

If the brakes continue to fade to a severe condition, additional DIC messages are displayed. The brake system warning light will illuminate, and the vehicle speed may be limited. See *Brake System Warning Light* ⇨ *153*.

If the vehicle stalls on a hill:

1. Apply the brakes to stop the vehicle, and then apply the parking brake.
2. Shift into P (Park) and then restart the engine.
   - If driving uphill when the vehicle stalls, shift to R (Reverse), release the parking brake, and back straight down.
   - Never try to turn the vehicle around. If the hill is steep enough to stall the vehicle, it is steep enough to cause it to roll over.
   - If you cannot make it up the hill, back straight down the hill.
   - Never back down a hill in N (Neutral) using only the brake. The vehicle can roll backward quickly and you could lose control.
   - If driving downhill when the vehicle stalls, shift to a lower gear, release the parking brake, and drive straight down the hill.
3. If the vehicle cannot be restarted after stalling, set the parking brake, shift into P (Park), and turn the vehicle off.
   - 3.1. Leave the vehicle and seek help.
   - 3.2. Stay clear of the path the vehicle would take if it rolled downhill.

- Avoid turns that take the vehicle across the incline of the hill. A hill that can be driven straight up or down might be too steep to drive across. Driving across an incline puts more weight on the downhill wheels, which could cause a downhill slide or a rollover.
- Surface conditions can be a problem. Loose gravel, muddy spots, or even wet grass can cause the tires to slip sideways,

downhill. If the vehicle slips sideways, it can hit something that will trip it — a rock, a rut, etc. — and roll over.

- Hidden obstacles can make the steepness of the incline more severe. If a rock is driven across with the uphill wheels, or if the downhill wheels drop into a rut or depression, the vehicle can tilt even more.
- If an incline must be driven across, and the vehicle starts to slide, turn downhill. This should help straighten out the vehicle and prevent the side slipping.

⚠ Warning

Getting out of the vehicle on the downhill side when stopped across an incline is dangerous. If the vehicle rolls over, you could be crushed or killed. Always get out on the uphill side of the vehicle and stay well clear of the rollover path.

Driving in Mud, Sand, Snow, or Ice

Use a low gear when driving in mud — the deeper the mud, the lower the gear. Keep the vehicle moving to avoid getting stuck.

Traction changes when driving on sand. On loose sand, such as on beaches or sand dunes, the tires tend to sink into the sand. This affects steering, accelerating, and braking. Drive at a reduced speed and avoid sharp turns or abrupt maneuvers.

Traction is reduced on hard packed snow and ice and it is easy to lose control. Reduce vehicle speed when driving on hard packed snow and ice.

⚠ Warning

Driving on frozen lakes, ponds, or rivers can be dangerous. Ice conditions vary greatly and the vehicle could fall through the ice;

(Continued)

Warning (Continued)

you and your passengers could drown. Drive your vehicle on safe surfaces only.

Driving in Water

⚠ Warning

Driving through rushing water can be dangerous. Deep water can sweep your vehicle downstream and you and your passengers could drown. If it is only shallow water, it can still wash away the ground from under your tires. Traction could be lost, and the vehicle could roll over. Do not drive through rushing water.

Caution

Do not drive through standing water if it is deep enough to cover the wheel hubs, axles, or exhaust pipe. Deep water can damage the axle and other vehicle parts.

If the standing water is not too deep, drive through it slowly. At faster speeds, water can get into the engine and cause it to stall. Stalling can occur if the exhaust pipe is under water. Do not turn off the ignition when driving through water. If the exhaust pipe is under water, the engine will not start. When going through water, the brakes get wet and it may take longer to stop. See "Driving on Wet Roads" later in this section.

After Off-Road Driving

Remove any brush or debris that has collected on the underbody or chassis, or under the hood. These accumulations can be a fire hazard. Re-install underbody air deflector and air dam if removed.

After operation in mud or sand, have the brake linings cleaned and checked. These substances can cause glazing and uneven braking. Check the body structure, driveline, steering, suspension, wheels, tires, and exhaust system for damage and check the fuel lines and cooling system for any leakage.

More frequent maintenance service is required. See the *Maintenance Schedule* ⇨ *419*.

Driving on Wet Roads

Rain and wet roads can reduce vehicle traction and affect your ability to stop and accelerate. Always drive slower in these types of driving conditions and avoid driving through large puddles and deep-standing or flowing water.

⚠ Warning

Wet brakes can cause crashes. They might not work as well in a quick stop and could cause pulling to one side. You could lose control of the vehicle.

After driving through a large puddle of water or a car/vehicle wash, lightly apply the brake pedal until the brakes work normally.

Flowing or rushing water creates strong forces. Driving through flowing water could cause the vehicle to be carried away. If this happens, you and other vehicle occupants could drown. Do not ignore police warnings and be very cautious about trying to drive through flowing water.

Hydroplaning

Hydroplaning is dangerous. Water can build up under the vehicle's tires so they actually ride on the water. This can happen if the road is

wet enough and you are going fast enough. When the vehicle is hydroplaning, it has little or no contact with the road.

There is no hard and fast rule about hydroplaning. The best advice is to slow down when the road is wet.

Other Rainy Weather Tips

Besides slowing down, other wet weather driving tips include:

- Allow extra following distance.
- Pass with caution.
- Keep windshield wiping equipment in good shape.
- Keep the windshield washer fluid reservoir filled.
- Have good tires with proper tread depth. See *Tires* ⇨ *362*.
- Turn off cruise control.

Hill and Mountain Roads

Driving on steep hills or through mountains is different than driving on flat or rolling terrain. Tips include:

- Keep the vehicle serviced and in good shape.
- Check all fluid levels, brakes, tires, and cooling system.
- Shift to a lower gear when going down steep or long hills.

⚠ Warning

Using the brakes to slow the vehicle on a long downhill slope can cause brake overheating, can reduce brake performance, and could result in a loss of braking. Shift the transmission to a lower gear to let the engine assist the brakes on a steep downhill slope.

⚠ Warning

Coasting downhill in N (Neutral) or with the ignition off is dangerous. This can cause overheating of the brakes and

(Continued)

Warning (Continued)

loss of steering assist. Always have the engine running and the vehicle in gear.

- Drive at speeds that keep the vehicle in its own lane. Do not swing wide or cross the center line.
- Be alert on top of hills; something could be in your lane (e.g., stalled car, crash).
- Pay attention to special road signs (e.g., falling rocks area, winding roads, long grades, passing or no-passing zones) and take appropriate action.

Winter Driving

Driving on Snow or Ice

Snow or ice between the tires and the road creates less traction or grip, so drive carefully. Wet ice can occur at about 0 °C (32 °F) when

freezing rain begins to fall. Avoid driving on wet ice or in freezing rain until roads can be treated.

For Slippery Road Driving:

- Accelerate gently. Accelerating too quickly causes the wheels to spin and makes the surface under the tires slick.
- Turn on Traction Control. See *Traction Control/Electronic Stability Control* ⇨ *246*.
- The Antilock Brake System (ABS) improves vehicle stability during hard stops, but the brakes should be applied sooner than when on dry pavement. See *Antilock Brake System (ABS)* ⇨ *243*.
- Allow greater following distance and watch for slippery spots. Icy patches can occur on otherwise clear roads in shaded areas. The surface of a curve or an overpass can remain icy when the surrounding roads are clear. Avoid sudden steering maneuvers and braking while on ice.
- Turn off cruise control.

Blizzard Conditions

Stop the vehicle in a safe place and signal for help. Stay with the vehicle unless there is help nearby.
If possible, use Roadside Assistance. See *Roadside Assistance Program* ⇨ *441*. To get help and keep everyone in the vehicle safe:

- Turn on the hazard warning flashers.
- Tie a red cloth to an outside mirror.

⚠ Warning

Snow can trap engine exhaust under the vehicle. This may cause exhaust gases to get inside. Engine exhaust contains carbon monoxide (CO), which cannot be seen or smelled. It can cause unconsciousness and even death.

(Continued)

Warning (Continued)

If the vehicle is stuck in snow:

- Clear snow from the base of the vehicle, especially any blocking the exhaust pipe.
- Open a window about 5 cm (2 in) on the vehicle side that is away from the wind, to bring in fresh air.
- Fully open the air outlets on or under the instrument panel.
- Adjust the climate control system to circulate the air inside the vehicle and set the fan speed to the highest setting. See “Climate Control Systems.”

For more information about CO, see *Engine Exhaust* ⇨ *230*.

To save fuel, run the engine for short periods to warm the vehicle and then shut the engine off and partially close the window. Moving about to keep warm also helps.

If it takes time for help to arrive, when running the engine, push the accelerator pedal slightly so the engine runs faster than the idle speed. This keeps the battery charged to restart the vehicle and to signal for help with the headlamps. Do this as little as possible, to save fuel.

If the Vehicle Is Stuck

Slowly and cautiously spin the wheels to free the vehicle when stuck in sand, mud, ice, or snow. See “Rocking the Vehicle to Get It Out” later in this section.

The Traction Control/Electronic Stability Control can often help to free a stuck vehicle. See *Traction Control/Electronic Stability Control* ⇨ *246*. If TC/ESC cannot free the vehicle, see “Rocking the Vehicle to Get it Out” following.

⚠ Warning

If the vehicle's tires spin at high speed, they can explode, and you or others could be injured. The vehicle can overheat, causing an engine compartment fire or other damage. Spin the wheels as little as possible and avoid going above 56 km/h (35 mph).

For information about using tire chains on the vehicle, see *Tire Chains* ⇨ *386*.

Rocking the Vehicle to Get It Out

Turn the steering wheel left and right to clear the area around the front wheels. Then make sure the wheels are pointed straight ahead. For four-wheel-drive vehicles, shift into Four-Wheel Drive High. Turn the TCS off. Shift back and forth between R (Reverse) and a forward gear, spinning the wheels as little as possible. To prevent transmission wear, wait until the wheels stop spinning before shifting gears. Slowly spinning the wheels in the forward and reverse directions causes a rocking motion that could free the vehicle. If that does not get the vehicle out after a few tries, it might need to be towed out. See *Towing the Vehicle* ⇨ *402*. Recovery hooks can be used, if the vehicle has them.

Recovery Hooks

⚠ Warning

Never pull on recovery hooks from the side. The hooks could break and you and others could be injured. When using recovery hooks, always pull the vehicle from the front.

Caution

Never use recovery hooks to tow the vehicle. The vehicle could be damaged, and the repairs would not be covered by the vehicle warranty.

There are recovery hooks at the front of the vehicle. Use them if the vehicle is stuck off-road and needs to be pulled some place to continue driving.

Vehicle Load Limits

It is very important to know how much weight the vehicle can carry. This weight is called the vehicle capacity weight and includes the weight of all occupants, cargo, and all nonfactory-installed options. Two labels on the vehicle may show how much weight it was designed to carry: the Tire and Loading Information label and the Certification/Tire label.

⚠ Warning

Do not load the vehicle any heavier than the Gross Vehicle Weight Rating (GVWR), or either the maximum front or rear Gross Axle Weight Rating (GAWR). This can cause systems to break and change the way the vehicle handles. This could

(Continued)

Warning (Continued)

cause loss of control and a crash. Overloading can also reduce stopping distance, damage the tires, and shorten the life of the vehicle.

Tire and Loading Information Label

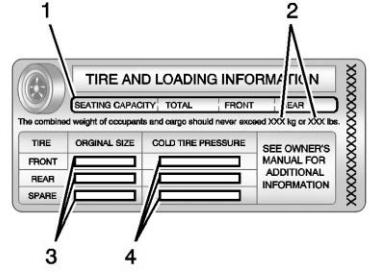

Label Example

A vehicle-specific Tire and Loading Information label is attached to the center pillar (B-pillar). The Tire and Loading

Information label shows the number of occupant seating positions (1), and the maximum vehicle capacity weight (2) in kilograms and pounds.

The Tire and Loading Information label also shows the size of the original equipment tires (3) and the recommended cold tire inflation pressures (4). For more information on tires and inflation see *Tires* ⇨ *362* and *Tire Pressure* ⇨ *371*.

There is also important loading information on the vehicle Certification/Tire label. It may show the Gross Vehicle Weight Rating (GVWR) and the Gross Axle Weight Rating (GAWR) for the front and rear axles. See “Certification/Tire Label” later in this section.

“Steps for Determining Correct Load Limit–

1. Locate the statement "The combined weight of occupants and cargo should never exceed XXX kg or XXX lbs." on your vehicle’s placard.
2. Determine the combined weight of the driver and passengers that will be riding in your vehicle.
3. Subtract the combined weight of the driver and passengers from XXX kg or XXX lbs.
4. The resulting figure equals the available amount of cargo and luggage load capacity. For example, if the "XXX" amount equals 1400 lbs. and there will be five 150 lb passengers in your vehicle, the amount of available cargo and luggage load capacity is 650 lbs. (1400-750 (5 x 150) = 650 lbs.)
5. Determine the combined weight of luggage and cargo being loaded on the vehicle. That weight may not safely exceed the available cargo and luggage load capacity calculated in Step 4.
6. If your vehicle will be towing a trailer, load from your trailer will be transferred to your vehicle. Consult this manual to determine how this reduces the available cargo and luggage load capacity of your vehicle.”

See *Trailer Towing* ⇨ *285* for important information on towing a trailer, towing safety rules, and trailering tips.

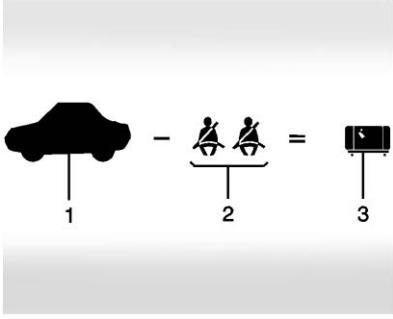

Example 1

1. Vehicle Capacity Weight for Example 1 = (453 kg) (1,000 lb)
2. Subtract Occupant Weight @ 68 kg (150 lb) × 2 = 136 kg (300 lb)
3. Available Occupant and Cargo Weight = 317 kg (700 lb)

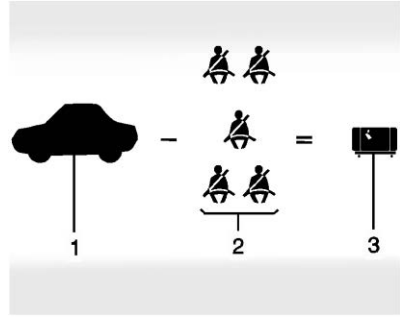

Example 2

1. Vehicle Capacity Weight for Example 2 = 453 kg (1,000 lb)
2. Subtract Occupant Weight @ 68 kg (150 lb) × 5 = 340 kg (750 lb)
3. Available Cargo Weight = 113 kg (250 lb)

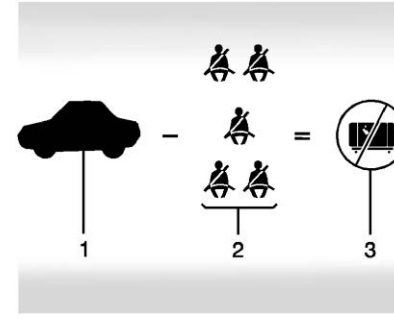

Example 3

1. Vehicle Capacity Weight for Example 3 = 453 kg (1,000 lb)
2. Subtract Occupant Weight @ 91 kg (200 lb) × 5 = 453 kg (1,000 lb)
3. Available Cargo Weight = 0 kg (0 lb)

Refer to the Tire and Loading Information label for specific information about the vehicle's capacity weight and seating positions. The combined weight

of the driver, passengers, and cargo should never exceed the vehicle's capacity weight.

Certification/Tire Label

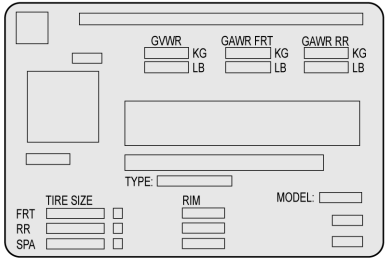

A vehicle-specific Certification/Tire label is label is attached to the center pillar (B-pillar). The label may show the size of the vehicle's original tires and the inflation pressures needed to obtain the gross weight capacity of the vehicle. This is called Gross Vehicle Weight Rating (GVWR). The GVWR includes the weight of the vehicle, all occupants, fuel, and cargo.

The Certification/Tire label also may show the maximum weights for the front and rear axles, called Gross Axle Weight Rating (GAWR). To determine the actual loads on the front and rear axles, weigh the vehicle at a weigh station. Your dealer can help with this. Be sure to spread the load equally on both sides of the centerline.

The Certification/Tire label also contains important information about the Front Axle Reserve Capacity. See *Adding a Snow Plow or Similar Equipment* ⇨ *311*.

⚠ Warning

In the case of a sudden stop or collision, things carried in the bed of your truck could shift forward and come into the passenger area, injuring you and others. If you put things in the bed of your truck, you should make sure they are properly secured.

Caution

Overloading the vehicle may cause damage. Repairs would not be covered by the vehicle warranty. Do not overload the vehicle.

Using heavier suspension components to get added durability might not change the weight ratings. Ask your dealer to help load the vehicle the right way.

⚠ Warning

Things you put inside the vehicle can strike and injure people in a sudden stop or turn, or in a crash.

- Put things in the cargo area of the vehicle. Try to spread the weight evenly.
- Never stack heavier things, like suitcases, inside the vehicle so that some of them are above the tops of the seats.
- Do not leave an unsecured child restraint in the vehicle.
- When you carry something inside the vehicle, secure it whenever you can.
- Do not leave a seat folded down unless you need to.

There is also important loading information for off-road driving in this manual. See “Loading the Vehicle for Off-Road Driving“ under *Off-Road Driving* ⇨ *202*.

Two-Tiered Loading

Depending on the model of the pickup, an upper load platform can be created by positioning three or four 5 cm (2 in) by 15 cm (6 in) wooden planks across the width of the pickup box. The planks must be inserted in the pickup box depressions.

When using this upper load platform, be sure the load is securely tied down to prevent it from shifting. The load's center of gravity should be positioned in a zone over the rear axle. The zone is located in the area between the front of each wheel well and the rear of each wheel well. The center of gravity height must not extend above the top of the pickup box flareboard.

Any load that extends beyond the vehicle's taillamp area must be properly marked according to local laws and regulations.

Remember not to exceed the Gross Axle Weight Rating (GAWR) of the front or rear axle.

Add-On Equipment

When carrying removable items, a limit on how many people carried inside the vehicle may be necessary. Be sure to weigh the vehicle before buying and installing the new equipment.

Caution
Overloading the vehicle may cause damage. Repairs would not be covered by the vehicle warranty. Do not overload the vehicle.

Remember not to exceed the Gross Axle Weight Rating (GAWR) of the front or rear axle.

* Equipment	Maximum Weight
Ladder Rack and Cargo	340 kg (750 lb)
Cross Toolbox and Cargo	181 kg (400 lb)
Side Boxes and Cargo	113 kg per side (250 lb per side)
* The combined weight for all rail-mounted equipment should not exceed 454 kg (1,000 lb).	

Loading Points

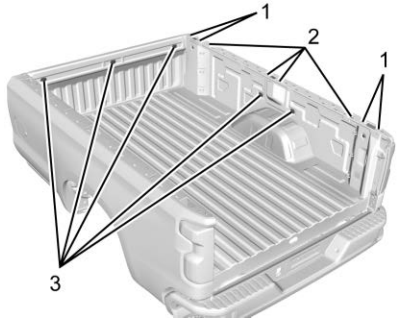

1. Primary Load Points
2. Secondary Load Areas
3. GM Approved Accessory Mounting Points

Structural members (1) and (2) are included in the pickup box design. Additional accessories should use these load points. Depending on the accessory design, use a spacer under the accessory at the load points to remove gap. The holes for GM approved accessories (3) are not intended for aftermarket equipment. See www.gmupfitter.com for additional pickup box load bearing structural information.

Truck-Camper Loading Information

A vehicle-specific Truck-Camper Loading Information label is attached to the inside of the vehicle's glove box. This label indicates if a slide-in camper can be carried, how much of a load the vehicle can carry, and how to correctly spread out the load. It will help to match the right slide-in camper to the vehicle.

Your dealer can help make a good vehicle-camper match and help determine the Cargo Weight Rating (CWR).

When installing and loading a slide-in camper, check the manufacturer's instructions.

When carrying a slide-in camper, the total cargo load of the vehicle is the weight of the camper plus:

- Everything added to the camper after it left the factory.
- Everything in the camper.
- All the people inside.

The CWR is the maximum weight of the load the vehicle can carry. It does not include the weight of the people inside. But, use about 68 kg (150 lb) for each seat.

The total cargo load must not be more than the vehicle's CWR.

Refer to the Truck-Camper Loading Information label in the glove box for dimensions A and B as shown in the following illustration.

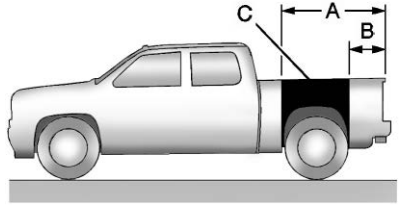

Use the rear edge of the load floor for measurement purposes. The recommended location for the cargo center of gravity is in zone C for the CWR. It is the point where the mass of a body is concentrated and, if suspended at that point, would balance the front and rear.

Here is an example of proper truck and camper match:

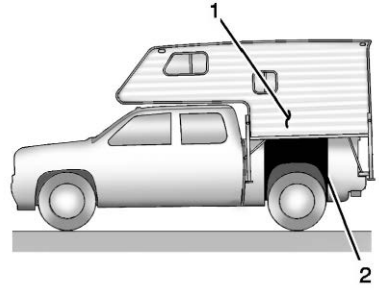

1. Camper Center of Gravity
2. Recommended Center of Gravity Location Zone

When the truck is used to carry a slide-in camper, the total cargo load of the truck consists of the manufacturer's camper weight figure, the weight of installed additional camper equipment not included in the manufacturer's camper weight figure, the weight of camper cargo, and the weight of passengers in the camper. The total cargo load should not

exceed the truck's cargo weight rating, and the camper's center of gravity (1) should fall within the truck's recommended center of gravity zone (2) when installed.

Any accessories or other equipment that are added to the vehicle must be weighed. Then, subtract this extra weight from the CWR. This extra weight may shorten the center of gravity zone of the vehicle.

If the slide-in camper and its load weighs less than the CWR, the center of gravity zone for the vehicle may be larger.

Secure loose items to prevent weight shifts that could affect the balance of the vehicle. When the truck-camper is loaded, drive to a scale and weigh on the front and on the rear wheels separately to determine axle loads. Individual axle loads should not exceed either of the gross axle weight ratings (GAWR). The total axle loads should not exceed the vehicle's gross vehicle weight rating (GVWR). These ratings are given on the Certification/Tire label attached to the B-pillar. See “Certification/Tire Label” under *Vehicle Load Limits* ⇨ *211*. If weight ratings are exceeded, move or remove items to bring all weights below the ratings.

See your dealer for more information on curb weights, cargo weights, Cargo Weight Rating, and the correct center of gravity zone.

Starting and Operating

New Vehicle Break-In

Caution

The vehicle does not need an elaborate break-in. But it will perform better in the long run if you follow these guidelines:

- Keep the vehicle speed at 88 km/h (55 mph) or less for the first 805 km (500 mi).
- Do not drive at any one constant speed, fast or slow, for the first 805 km (500 mi). Do not make full-throttle starts. Avoid downshifting to brake or slow the vehicle.
- Avoid making hard stops for the first 322 km (200 mi) or so. During this time the new brake linings are not yet broken in. Hard stops with new linings can mean

(Continued)

Caution (Continued)

premature wear and earlier replacement. Follow this breaking-in guideline every time you get new brake linings.

- Do not tow a trailer during break-in. See *Trailer Towing* ⇨ *285* for the trailer towing capabilities of the vehicle and more information.

Following break-in, engine speed and load can be gradually increased.

Ignition Positions (Key Access)

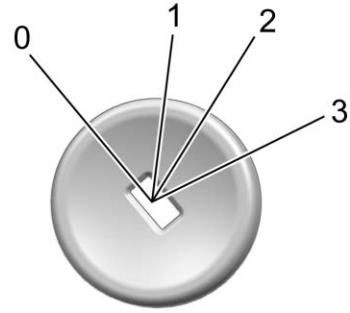

0. Stopping the Engine/LOCK/OFF
1. ACC/ACCESSORY
2. ON/RUN
3. START

The ignition switch has four positions.

To shift out of P (Park), the ignition must be ON/RUN and the brake pedal must be applied.

0 (Stopping the Engine/LOCK/OFF) : This position turns off the vehicle. It also locks the ignition, the transmission, and the steering column, if equipped with a locking steering column.

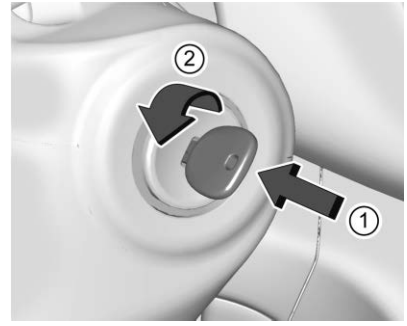

To turn off the vehicle:

1. Make sure that the vehicle is stopped.
2. Shift to P (Park).
3. Continue to hold the brake pedal, then set the parking brake. See *Electric Parking Brake* ⇨ *244*.

4. Push the key all the way in toward the steering column, then turn the key to LOCK/OFF.
5. Remove the key.
6. Release the brake pedal.

See your dealer if the key can be removed in any other position.

Retained Accessory Power (RAP) will remain active. See *Retained Accessory Power (RAP)* ⇨ *227*.

A warning chime will sound when the driver door is opened and the key is in the ignition.

If equipped with a locking steering column, the steering can bind with the front wheels turned off center, which may prevent key rotation out of LOCK/OFF. If this happens, move the steering wheel from right to left while turning the key to ACC/ACCESSORY. If this does not work, then the vehicle needs service.

⚠ Warning

Turning off the vehicle while moving may cause loss of power assist in the brake and steering systems and disable the airbags. While driving, turn off the vehicle only in an emergency.

In an emergency, if the vehicle cannot be pulled over and must be turned off while driving:

1. Push the key all the way in toward the steering column, then turn the key to ACC/ACCESSORY.
2. Brake using firm and steady pressure. Do not pump the brakes repeatedly. This may deplete power assist, requiring increased brake pedal force.
3. Shift the vehicle to N (Neutral). This can be done while the vehicle is moving. Continue braking and steer the vehicle to a safe location.
4. Come to a complete stop.
5. Shift to P (Park).
6. Continue to hold the brake pedal, then set the parking brake. See *Electric Parking Brake* ⇨ *244*.
7. Push the key all the way in toward the steering column, then turn the ignition to LOCK/OFF.
8. Remove the key.
9. Release the brake pedal.

Caution

Use the correct key, make sure it is all the way in — or pushed all the way in toward the steering column when turning off the vehicle — and turn it only with your hand.

1 (ACC/ACCESSORY) : This position allows features such as the infotainment system to operate while the vehicle is off. It also unlocks the steering column, if equipped with a locking steering

column. Use this position if the vehicle must be pushed or towed. See *Retained Accessory Power (RAP)* ⇨ *227*.

From ON/RUN, push the key all the way in toward the steering column, then turn the key to ACC/ ACCESSORY.

If the key is left in ACC/ ACCESSORY with the engine off, the battery could drain and the vehicle may not start.

A warning chime will sound when the driver door is opened and the key is in the ignition.

2 (ON/RUN) : This position can be used to operate the electrical accessories and to display some instrument cluster warning and indicator lights. This position can also be used for service and diagnostics, and to verify the proper operation of the malfunction indicator lamp as may be required for emission inspection purposes. The switch stays in this position when the engine is running. The transmission is also unlocked in this position.

If the key is left in ON/RUN with the engine off, the battery could drain and the vehicle may not start.

3 (START) : This is the position that starts the engine. When the engine starts, release the key. The ignition returns to ON/RUN for driving.

Ignition Positions (Keyless Access)

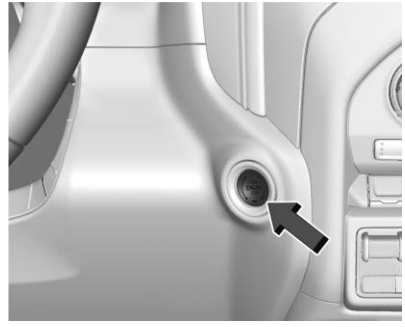

Vehicles equipped with Keyless Access have pushbutton starting. The Remote Keyless Entry (RKE) transmitter must be in the vehicle for the system to operate. If the pushbutton start is not working, the vehicle may be near a strong radio antenna signal causing interference to the Keyless Access system. See *Remote Keyless Entry (RKE) System Operation (Keyless Access)* ⇨ *34* or *Remote Keyless Entry (RKE) System Operation (Key Access)* ⇨ *42*.

To shift out of P (Park), the ignition must be on or in Service Mode, and the brake pedal must be applied.

⚠ Warning

Turning off the vehicle while moving may cause loss of power assist in the brake and steering systems and disable the airbags. While driving, only shut the vehicle off in an emergency.

Stopping the Engine/LOCK/ OFF (No Indicator Lights) : When the vehicle is stopped, press ENGINE START/STOP once to turn the engine off.

If the vehicle is in P (Park), the ignition will turn off, and Retained Accessory Power (RAP) will remain active. See *Retained Accessory Power (RAP)* ⇨ *227*.

If the vehicle is not in P (Park), the ignition will return to ACC/ ACCESSORY and display the message SHIFT TO PARK in the Driver Information Center (DIC). When the vehicle is shifted into P (Park), the ignition system will turn off.

The vehicle may have an electric steering column lock. The lock is activated when the ignition is turned off and either front door is opened. A sound may be heard as the lock actuates or releases. The steering column lock may not release with the wheels turned off center. If this happens, the vehicle may not start. Move the steering wheel from left to right while attempting to start the vehicle. If this does not work, the vehicle needs service.

If the vehicle must be shut off in an emergency:

1. Brake using a firm and steady pressure. Do not pump the brakes repeatedly. This may deplete power assist, requiring increased brake pedal force.
2. Shift the vehicle to N (Neutral). This can be done while the vehicle is moving. After shifting to N (Neutral), firmly apply the brakes and steer the vehicle to a safe location.
3. Come to a complete stop.
4. Hold the brake pedal down and shift to P (Park). The shift lever must be in P (Park) to turn the ignition off.
5. Continue to hold the brake pedal down.
6. Set the parking brake. See *Electric Parking Brake* ⇨ *244*.
7. Press ENGINE START/STOP once to turn the ignition off.
8. Release the brake pedal.

If the vehicle cannot be pulled over, and must be shut off while driving, press and hold ENGINE START/ STOP for longer than two seconds, or press twice in five seconds.

ACC/ACCESSORY (Amber Indicator Light) : This mode allows some electrical accessories to be used when the engine is off.

With the ignition off, pressing the button one time without the brake pedal applied will place the ignition system in ACC/ACCESSORY.

The ignition will switch from ACC/ ACCESSORY to off after five minutes to prevent battery rundown.

ON/RUN/START (Green Indicator Light) : This mode is for driving and starting. With the ignition off, and the brake pedal applied, pressing the button once will turn the ignition on. Once engine cranking begins, release the button. Engine cranking will continue until the engine starts. See *Starting the Engine* ⇨ *223*.

Service Mode

This power mode is available for service and diagnostics, and to verify the proper operation of the malfunction indicator lamp as may be required for emission inspection purposes. With the vehicle off, and the brake pedal not applied, pressing and holding the button for more than five seconds will place the vehicle in Service Mode. The instruments and audio systems will operate as they do when the ignition is on, but the vehicle will not be able to be driven. The engine will not start in Service Mode. Press the button again to turn the ignition off.

Starting the Engine

If the vehicle has a diesel engine, see the Duramax diesel supplement.

Caution

If you add electrical parts or accessories, you could change the way the engine operates. Any resulting damage would not be covered by the vehicle warranty. See *Add-On Electrical Equipment* ⇨ *310*.

Move the shift lever to P (Park) or N (Neutral). To restart the engine when the vehicle is already moving, use N (Neutral) only.

Caution

Do not try to shift to P (Park) if the vehicle is moving. If you do, you could damage the transmission. Shift to P (Park) only when the vehicle is stopped.

Starting Procedure

1. For Key Access vehicles, turn the ignition key to START. When the engine starts, let go of the key.

   For Keyless Access vehicles, the RKE transmitter must be in the vehicle. Press ENGINE START/STOP with the brake pedal applied. When the engine begins cranking, let go of the button.

   The idle speed will go down as the engine gets warm. Do not race the engine immediately after starting it. Operate the engine and transmission gently to allow the oil to warm up and lubricate all moving parts.

   When the low fuel warning light is on and the FUEL LEVEL LOW message is displayed in the Driver Information Center (DIC), hold the ignition switch in the START position to continue engine cranking.

Caution

Cranking the engine for long periods of time, by returning the ignition to the START position immediately after cranking has ended, can overheat and damage the cranking motor, and drain the battery. Wait at least 15 seconds between each try, to let the cranking motor cool down.

2. If the engine does not start after five to 10 seconds, especially in very cold weather (below −18 °C or 0 °F), it could be flooded with too much gasoline. Try pushing the accelerator pedal all the way to the floor and holding it there while holding the key in START or ENGINE START/STOP for up to a maximum of 15 seconds. Wait at least 15 seconds between each try, to allow the cranking motor to cool down. When the engine starts, let go of the key or button and accelerator. If the vehicle starts briefly but then stops again, do the same thing. This clears the extra gasoline from the engine. Do not race the engine immediately after starting it. Operate the engine and transmission gently until the oil warms up and lubricates all moving parts.

Stop/Start System

If equipped, the Stop/Start system will shut off the engine to help conserve fuel. It has components designed for the increased number of starts.

⚠ Warning

The automatic engine Stop/Start feature causes the engine to shut off while the vehicle is still on. Do not exit the vehicle before shifting to P (Park). The vehicle may restart and move unexpectedly.

(Continued)

Warning (Continued)

Always shift to P (Park), and then turn the ignition off before exiting the vehicle.

Auto Engine Stop/Start

When the brakes are applied and the vehicle is at a complete stop, the engine may turn off. When stopped, the tachometer displays AUTO STOP. See *Tachometer* ⇨ *145*. When the brake pedal is released or the accelerator pedal is pressed, the engine will restart.

To maintain vehicle performance, other conditions may cause the engine to automatically restart before the brake pedal is released.

Auto Stops may not occur and/or Auto Starts may occur because:

- The climate control settings require the engine to be running to cool or heat the vehicle interior.
- The vehicle battery charge is low.

- The vehicle battery has recently been disconnected.
- Minimum vehicle speed has not been reached since the last Auto Stop.
- The accelerator pedal is pressed.
- The engine or transmission is not at the required operating temperature.
- The outside temperature is not in the required operating range.
- The vehicle is in any gear other than D (Drive).
- Tow/Haul Mode or other driver modes have been selected.
- The vehicle is on a steep hill or grade.
- The driver door has been opened or the driver seat belt has been unbuckled.
- The hood has been opened.
- The Auto Stop has reached the maximum allowed time.

Auto Stop Disable Switch

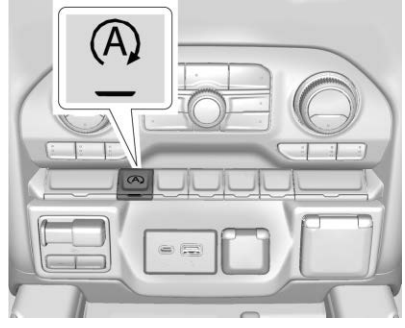

If equipped, the automatic engine Stop/Start feature can be disabled and enabled by pressing the switch with the Ⓐ symbol. Auto Stop is enabled each time you start the vehicle.

When Ⓐ is illuminated, the system is enabled.

Engine Heater

The engine heater can provide easier starting and better fuel economy during engine warm-up in cold weather conditions at or below −18 °C (0 °F). Vehicles with an engine heater should be plugged in at least four hours before starting. An internal thermostat in the plug-end of the cord may exist, which will prevent engine heater operation at temperatures above −18 °C (0 °F).

⚠ Warning

Do not plug in the engine block heater while the vehicle is parked in a garage or under a carport. Property damage or personal injury may result. Always park the vehicle in a clear open area away from buildings or structures.

To Use the Engine Heater

1. Turn off the engine.
2. Check the heater cord for damage. If it is damaged, do not use it. See your dealer for a replacement. Inspect the cord for damage yearly.

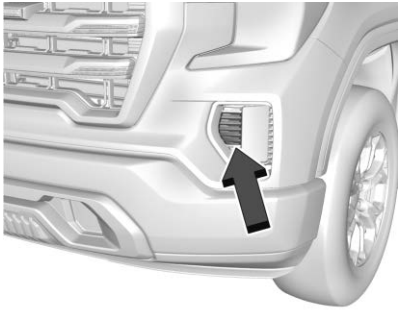

Base model shown other models are similar

3. Remove the engine heater connector cover by gently prying with a flat blade tool.

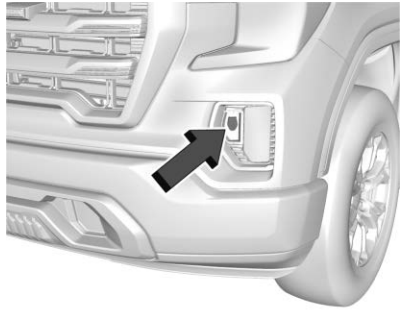

4. Plug the heater cord into the connector in the front fascia.
5. Plug the cord into a grounded 110-volt AC outlet that is protected by a ground fault detection function.

⚠ Warning

Improper use of the heater cord or an extension cord can damage the cord and may result in overheating and fire.

- Plug the cord into a three-prong electrical utility receptacle that is protected by a ground fault detection function. An ungrounded outlet could cause an electric shock.
- Use a weatherproof, heavy-duty, 15 amp-rated extension cord if needed. Failure to use the recommended extension cord in good operating condition, or using a damaged heater or extension cord, could make

(Continued)

Warning (Continued)

it overheat and cause a fire, property damage, electric shock, and injury.

- Do not operate the vehicle with the heater cord permanently attached to the vehicle. Possible heater cord and thermostat damage could occur.
- While in use, do not let the heater cord touch vehicle parts or sharp edges. Never close the hood on the heater cord.
- Before starting the vehicle, unplug the cord, reattach the cover to the plug, and securely fasten the cord. Keep the cord away from any moving parts.

6. Before starting the engine, be sure to unplug and store the cord.

The length of time the heater should remain plugged in depends on several factors. Ask a dealer in the area where you will be parking the vehicle for the best advice on this.

Retained Accessory Power (RAP)

Some vehicle accessories may be used after the ignition is turned off.

The power windows and sunroof, if equipped, will continue to work for up to 10 minutes or until any door is opened.

The infotainment system will continue to work for 10 minutes, until the driver door is opened, or until the ignition is turned on or placed in ACC/ACCESSORY.

Shifting Into Park

⚠ Warning

It can be dangerous to get out of the vehicle if the shift lever is not fully in P (Park) with the parking brake firmly set. The vehicle can roll. If you have left the engine running, the vehicle can move suddenly. You or others could be injured. To be sure the vehicle will not move, even when you are on fairly level ground, use the steps that follow. With four-wheel drive, if the transfer case is in N (Neutral), the vehicle will be free to roll, even if the shift lever is in P (Park). Be sure the transfer case is in a drive gear. If towing a trailer, see *Driving Characteristics and Towing Tips* ⇨ *280*.

1. Hold the brake pedal down, then set the parking brake. See *Electric Parking Brake* ⇨ *244*.

2. Move the shift lever into the P (Park) position by pulling the shift lever toward you and moving it up as far as it will go.
3. Be sure the transfer case (if equipped) is in a drive gear – not in N (Neutral).
4. Turn the ignition off. For Key Access, push the ignition key in, towards the steering column and then turn the ignition off.
5. For Key Access, remove the key and take it with you. If you can leave the vehicle with the ignition key in your hand, the vehicle is in P (Park).

   For Keyless Access, take the Remote Keyless Entry (RKE) transmitter with you.

Leaving the Vehicle with the Engine Running

⚠ Warning

It can be dangerous to leave the vehicle with the engine running. The vehicle could move suddenly if the shift lever is not fully in P (Park) with the parking brake firmly set.

If you have four-wheel drive and the transfer case is in N (Neutral), the vehicle will be free to roll, even if the shift lever is in P (Park). So be sure the transfer case is in a drive gear – not in N (Neutral).

And, if you leave the vehicle with the engine running, it could overheat and even catch fire. You or others could be injured. Do not leave the vehicle with the engine running unless you have to.

If you have to leave the vehicle with the engine running, be sure the vehicle is in P (Park) and the parking brake is firmly set before you leave it. After moving the shift lever into P (Park), hold the regular brake pedal down. Then, see if you can move the shift lever away from P (Park) without first pulling it toward you. If you can, it means that the shift lever was not fully locked into P (Park).

Torque Lock

If you are parking on a hill and you do not shift the transmission into P (Park) properly, the weight of the vehicle may put too much force on the parking pawl in the transmission. You may find it difficult to pull the shift lever out of P (Park). This is called torque lock. To prevent torque lock, set the parking brake and then shift into P (Park) properly before you leave the driver seat.

When you are ready to drive, move the shift lever out of P (Park) before you release the parking brake.

If torque lock does occur, you may need to have another vehicle push yours a little uphill to take some of the pressure from the parking pawl in the transmission. You will then be able to pull the shift lever out of P (Park).

Shifting out of Park

This vehicle is equipped with an electronic shift lock release system. The system is designed to prevent movement of the shift lever out of P (Park), unless the brake pedal is applied and the ignition is on or in Service Mode.

The shift lock release is always functional except in the case of an uncharged or low voltage – less than 9 volt – battery.

If the vehicle has an uncharged or low voltage battery, try charging or jump starting the battery. See *Jump Starting - North America* ⇨ *399*.

To shift out of P (Park):

1. Apply the brake pedal.
2. Release the parking brake if it is applied. See *Electric Parking Brake* ⇨ *244*.
3. Pull the shift lever toward you, then move it to the desired position, and release.

If the vehicle still cannot be shifted out of P (Park):

1. Ease the pressure on, or release the shift lever.
2. While holding the brake pedal, push the shift lever all the way into P (Park).
3. Pull the shift lever toward you, then move it to the desired position, and release.

If there is still a problem shifting, have the vehicle serviced soon.

Parking over Things That Burn

⚠ Warning

Things that can burn could touch hot exhaust parts under the vehicle and ignite. Do not park over papers, leaves, dry grass, or other things that can burn.

Active Fuel Management

If equipped, Active Fuel Management allows a V8, V6, or L4 gasoline engine to operate on either all of its cylinders, or a reduced number of cylinders, depending on the driving conditions.

When less power is required, such as cruising at a constant vehicle speed, the system will enable reduced cylinder operation, allowing the vehicle to achieve better fuel economy. When greater power is required, such as accelerating from

a stop, passing, or merging onto a freeway, the system will maintain full-cylinder operation.

Dynamic Fuel Management

If equipped, Dynamic Fuel Management calculates the number of cylinders needed to maximize fuel economy and meet the driving demands. Dynamic Fuel Management allows the engine to operate in multiple possible configurations ranging from 1-cylinder up to the full 8-cylinder operation.

Extended Parking

It is best not to park with the vehicle running. If the vehicle is left running, be sure it will not move and there is adequate ventilation.

See *Shifting Into Park* ⇨ *227* and *Engine Exhaust* ⇨ *230*.

If the vehicle is left parked and running with the RKE transmitter outside the vehicle, it will continue to run for up to half an hour.

If the vehicle is left parked and running with the RKE transmitter inside the vehicle, it will continue to run for up to an hour.

The vehicle could turn off sooner if it is parked on a hill, due to lack of available fuel.

The timer will reset if the vehicle is taken out of P (Park) while it is running.

Engine Exhaust

⚠ Warning

Engine exhaust contains carbon monoxide (CO), which cannot be seen or smelled. Exposure to CO can cause unconsciousness and even death.

Exhaust may enter the vehicle if:

- The vehicle idles in areas with poor ventilation (parking garages, tunnels, deep snow that may block underbody airflow or tail pipes).
- The exhaust smells or sounds strange or different.
- The exhaust system leaks due to corrosion or damage.
- The vehicle exhaust system has been modified, damaged, or improperly repaired.

(Continued)

Warning (Continued)

- There are holes or openings in the vehicle body from damage or aftermarket modifications that are not completely sealed.

If unusual fumes are detected or if it is suspected that exhaust is coming into the vehicle:

- Drive it only with the windows completely down.
- Have the vehicle repaired immediately.

Never park the vehicle with the engine running in an enclosed area such as a garage or a building that has no fresh air ventilation.

Running the Vehicle While Parked

It is better not to park with the engine running.

If the vehicle is left with the engine running, follow the proper steps to be sure the vehicle will not move. See *Shifting Into Park* ⇨ *227* and *Engine Exhaust* ⇨ *230*.

If parking on a hill and pulling a trailer, see *Driving Characteristics and Towing Tips* ⇨ *280*.

Automatic Transmission

If equipped, there is an electronic shift lever position indicator within the instrument cluster. This display comes on when the ignition is in ACC/ACCESSORY, on or service mode.

There are several different positions for the shift lever.

See *Driver Mode Control* ⇨ *249* and “Range Selection Mode” under *Manual Mode* ⇨ *234*.

P : This position locks the rear wheels. Use P (Park) when starting the engine because the vehicle cannot move easily.

When parked on a hill, especially when the vehicle has a heavy load, you might notice an increase in the effort to shift out of P (Park). See “Torque Lock” under *Shifting Into Park* ⇨ *227*.

⚠ Warning

It is dangerous to get out of the vehicle if the shift lever is not fully in P (Park) with the parking brake firmly set. The vehicle can roll.

Do not leave the vehicle when the engine is running. If you have left the engine running, the vehicle can move suddenly. You or others could be injured. To be sure the vehicle will not move, even when you are on fairly level ground, always set the parking brake and move the shift lever to P (Park). See *Shifting Into Park* ⇨ *227* and *Driving Characteristics and Towing Tips* ⇨ *280*.

⚠ Warning

If equipped with four-wheel drive, the vehicle will be free to roll if the transfer case is in N (Neutral), even when the shift lever is in P (Park). You or someone else could be seriously injured. Be sure the transfer case is in a drive gear — 2↑, 4↑, or 4↓ — or set the parking brake before placing the transfer case in N (Neutral). See *Four-Wheel Drive* ⇨ *238*.

R : Use this gear to back up.

Caution

Shifting to R (Reverse) while the vehicle is moving forward could damage the transmission. The repairs would not be covered by the vehicle warranty. Shift to R (Reverse) only after the vehicle is stopped.

To rock the vehicle back and forth to get out of snow, ice, or sand without damaging the transmission, see *If the Vehicle Is Stuck* ⇨ *210*.

N : In this position, the engine does not connect with the wheels. To restart the engine when the vehicle is already moving, use N (Neutral) only.

Also, use N (Neutral) when the vehicle is being towed.

⚠ Warning

Shifting into a drive gear while the engine is running at high speed is dangerous. Unless your foot is firmly on the brake pedal, the vehicle could move very rapidly. You could lose control and hit people or objects. Do not shift into a drive gear while the engine is running at high speed.

Caution

Shifting out of P (Park) or N (Neutral) with the engine running at high speed may damage the transmission. The repairs would not be covered by the vehicle warranty. Be sure the engine is not running at high speed when shifting the vehicle.

Caution

A transmission hot message may display if the automatic transmission fluid is too hot. Driving under this condition can damage the vehicle. Stop and idle the engine to cool the automatic transmission fluid. This message clears when the transmission fluid has cooled sufficiently.

D : This position is for normal driving. It provides the best fuel economy. If more power is needed for passing, press the accelerator pedal down.

- When going less than about 55 km/h (35 mph), push the accelerator pedal about halfway down.
- When going about 55 km/h (35 mph) or more, push the accelerator all the way down.

  By doing this, the vehicle shifts down to the next gear and has more power.

Use D (Drive) and Tow/Haul Mode when towing a trailer, carrying a heavy load, driving on steep hills, or driving off-road. Shift the transmission to a lower gear if the transmission shifts too often.

Downshifting the transmission in slippery road conditions could result in skidding. See “Skidding” under *Loss of Control* ⇨ *202*.

The vehicle has a shift stabilization feature that adjusts the transmission shifting to the current driving conditions in order to reduce rapid upshifts and downshifts. This shift stabilization feature is designed to determine, before making an upshift, if the engine is able to maintain vehicle speed by analyzing things such as vehicle speed, throttle position, and vehicle load. If the shift stabilization feature determines that a current vehicle speed cannot be maintained, the transmission does not upshift and instead holds the current gear. In some cases, this could appear to be a delayed shift, however the transmission is operating normally.

The transmission uses adaptive shift controls. The adaptive shift control process continually compares key shift parameters to pre-programmed ideal shifts stored in the transmission's computer. The transmission constantly makes adjustments to improve vehicle performance according to how the vehicle is being used, such as with a heavy load or when the temperature changes. During this adaptive shift control process, shifting might feel different as the transmission determines the best settings.

When temperatures are very cold, the transmission's gear shifting could be delayed providing more stable shifts until the engine warms up. Shifts could be more noticeable with a cold transmission. This difference in shifting is normal.

If equipped with the 2.7L L4 engine, engine speeds may be increased while driving at highway speeds while the engine is still warming up.

L : This position allows selection of a range of gears appropriate for current driving conditions.
If equipped, see "Range Selection Mode" under *Manual Mode* ⇨ *234*.

Caution
Spinning the tires or holding the vehicle in one place on a hill using only the accelerator pedal may damage the transmission. The repair will not be covered by the vehicle warranty. If the vehicle is stuck, do not spin the tires. When stopping on a hill, use the brakes to hold the vehicle in place.

Manual Mode

Range Selection Mode

Range Selection Mode helps control the vehicle's transmission and vehicle speed while driving downhill or towing a trailer by letting you select a desired range of gears.

To use this feature:

1. Move the shift lever to L (Manual Mode).
2. Press the plus/minus buttons on the shift lever to select the desired range of gears for current driving conditions.

When the shift lever is moved from D (Drive) to L (Manual Mode), a number displays next to the L, indicating the current transmission range.

This number is the highest gear that the transmission will command while operating in L (Manual Mode). All gears below that number are available. As driving conditions change, the transmission can automatically shift to lower gears. For example, when L5 is selected, 1 (First) through 5 (Fifth) gears are automatically shifted by the transmission, but 6 (Sixth) cannot be used until the plus/minus button on the shift lever is used to change to the range.

In vehicles with gasoline engines, when the shift lever is moved from D (Drive) to L (Manual Mode), a downshift may occur. The gear that the transmission is operating in when the shift lever is moved from D (Drive) to L (Manual Mode) determines if a downshift occurs. See the following charts.

6-Speed Automatic Transmission

Gear before shifting from D (Drive) to L (Manual Mode)	6th	5th	4th	3rd	2nd	1st
Range after shifting from D (Drive) to L (Manual Mode)	L4	L4	L3	L2	L2	L1

8-Speed Automatic Transmission

Gear before shifting from D (Drive) to L (Manual Mode)	8th	7th	6th	5th	4th	3rd	2nd	1st
Range after shifting from D (Drive) to L (Manual Mode) – Tow/Haul not engaged	L6	L6	L5	L4	L3	L3	L2	L1
Range after shifting from D (Drive) to L (Manual Mode) – Tow/Haul engaged	L6	L5	L4	L3	L3	L3	L2	L1

10-Speed Automatic Transmission

Gear before shifting from D (Drive) to L (Manual Mode)	10th	9th	8th	7th	6th	5th	4th	3rd	2nd	1st
Range after shifting from D (Drive) to L (Manual Mode) - Tow/Haul not engaged	L7	L7	L7	L6	L5	L4	L3	L3	L2	L1
Range after shifting from D (Drive) to L (Manual Mode) - Tow/Haul engaged	L7	L7	L6	L5	L4	L3	L3	L3	L2	L1

Grade Braking is not available when Range Selection Mode is active. See *Tow/Haul Mode* ⇨ *237*.

While using Range Selection Mode, cruise control and the Tow/Haul Mode can be used.

If the vehicle has an exhaust brake, it can also be used, but will not automatically downshift the transmission. See “Exhaust Brake” in the Duramax diesel supplement.

Caution

Spinning the tires or holding the vehicle in one place on a hill using only the accelerator pedal may damage the transmission. The repair will not be covered by the vehicle warranty. If the vehicle is stuck, do not spin the tires. When stopping on a hill, use the brakes to hold the vehicle in place.

Low Traction Mode

If equipped, Low Traction Mode assists in vehicle acceleration when road conditions are slippery, such as with ice or snow. While the vehicle is at a stop, select L2 using Range Selection Mode. This will limit torque to the wheels and help prevent the tires from spinning.

Tow/Haul Mode

The Tow/Haul Mode adjusts the transmission shift pattern to reduce shift cycling. This provides increased performance, vehicle control, and enhanced transmission and engine cooling when driving down steep hills or mountain grades, when towing, or when hauling heavy loads. See *Driver Mode Control* ⇨ *249* to activate Tow/Haul Mode.

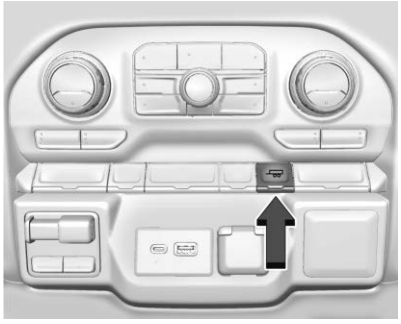

For vehicles without Driver Mode Control, press the Tow/Haul button on the center stack.

If equipped, the Stop/Start system will become unavailable when Tow/Haul Mode is active.

Tow/Haul Mode Grade Braking

Tow/Haul Mode Grade Braking is only enabled while the Tow/Haul Mode is selected and the vehicle is not in the Range Selection Mode. See *Manual Mode* ⇨ *234*. Tow/Haul Mode Grade Braking assists in maintaining desired vehicle speeds when driving on downhill grades by using the engine and transmission to slow the vehicle.

See *Towing Equipment* ⇨ *289*.

Drive Systems

Four-Wheel Drive

If equipped, four-wheel drive engages the front axle for extra traction.

Read the appropriate section for transfer case operation before using.

Caution
Do not drive on clean, dry pavement in 4 ↑ and 4 ↓ (if equipped) for an extended period of time. These conditions may cause premature wear on the vehicle's powertrain.

Driving on clean, dry pavement in 4 ↑ or 4 ↓ may:

- Cause a vibration to be felt in the steering system.
- Cause tires to wear faster.

⚠ Warning

If equipped with four-wheel drive, the vehicle will be free to roll if the transfer case is in N (Neutral), even when the shift lever is in P (Park). You or someone else could be seriously injured. Be sure the transfer case is in a drive gear — 2↑, 4↑, or 4↓ — or set the parking brake before placing the transfer case in N (Neutral). See *Shifting Into Park* ⇨ *227*.

Caution

Extended high-speed operation in 4↓ may damage or shorten the life of the drivetrain.

An engagement noise and bump is normal when shifting between 4↓ and 4↑ or N (Neutral), with the engine running.

Shifting into 4↓ will turn Traction Control and StabiliTrak/Electronic Stability Control (ESC) off. See *Traction Control/Electronic Stability Control* ⇨ *246*.

Automatic Transfer Case

Two-Speed Transfer Case

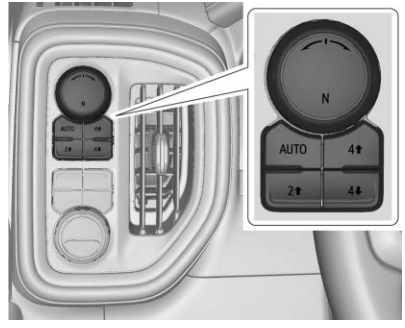

If equipped, the transfer case controls are used to shift into and out of four-wheel drive.

To shift the transfer case, press the desired button. The graphic in the instrument cluster will flash while a shift is in progress. The graphic displayed will change to indicate the setting requested.

When the shift is complete the graphic will stop flashing. The DIC message turns off once the shift is complete. If the transfer case cannot complete a shift request, it will go back to its last chosen setting.

The settings are:

N (Neutral) : Use only when the vehicle needs to be towed. See *Recreational Vehicle Towing* ⇨ *403* or *Towing the Vehicle* ⇨ *402*.

2↑ (Two-Wheel Drive High) : Use for driving on most streets and highways. The front axle is not engaged. This setting provides the best fuel economy.

AUTO (Automatic Four-Wheel Drive) : Use when road surface conditions are variable. When driving in AUTO, the front axle is engaged, and the vehicle's power is sent to the front and rear wheels

automatically based on driving conditions. This setting provides slightly lower fuel economy than 2↑.

4↑ (Four-Wheel Drive High) : Use this setting when extra traction is needed, such as when driving on snowy or icy roads, when off-roading, or when plowing snow.

4↓ (Four-Wheel Drive Low) : This setting engages the front axle and delivers extra torque. Choose 4↓ when driving off-road in deep sand, deep mud, or deep snow, and while climbing or descending steep hills.

While driving in 4↓, keep vehicle speed below 72 km/h (45 mph).

Shifting into 4↓ will turn Traction Control and StabiliTrak/ESC off. See *Traction Control/Electronic Stability Control* ⇨ *246*.

Shifts between 2↑, 4↑, and AUTO

Any of these shifts can be made at normal driving speed.

The actual 4x4 shift request is only made after the button is released. The 4x4 graphic will remain flashing until the shift request has completed. A DIC message displays to indicate that the 4x4 transfer case has been requested to shift to the new desired state.

Once the 4x4 shift has completed, the DIC message disappears, the 4x4 graphic stops flashing, and the current setting is indicated.

When a shift to 2↑ is completed successfully while in P (Park), the parking brake will engage. To resume driving, shift the transmission to the desired gear and manually release the parking brake or press the accelerator pedal to begin driving. See *Electric Parking Brake* ⇨ *244*.

If equipped, use 4↓, AUTO, or 4↑ to provide additional traction when parking on a steep grade with poor traction such as ice, snow, mud, or gravel.

Shifting Into 4↓

1. The ignition must be on and the vehicle must be stopped or moving less than 5 km/h (3 mph) with the transmission in N (Neutral). It is best for the vehicle to be moving 1.6 to 3.2 km/h (1 to 2 mph).
2. Press 4↓. The actual 4x4 shift request is only made after the button is released. The 4x4 graphic will remain flashing until the shift request has completed. A DIC message displays to indicate that the 4x4 transfer case has been requested to shift to the new desired state.

   Once the 4x4 shift has completed, the DIC message disappears, the 4x4 graphic stops flashing and the current setting is indicated.

If vehicle speed is higher when shift request occurs, a DIC message displays. Reduce vehicle speed.

If the transmission is not in N (Neutral) when shift request occurs, a DIC message displays. The vehicle will allow 20 seconds for the shift to occur. After this time, a graphic in the instrument cluster will indicate that the transfer case is in 4↓.

Caution
Shifting the transmission into gear before the requested mode indicator light has stopped flashing could damage the transfer case.

If the transmission is not shifted into N (Neutral) or the vehicle has not slowed to 5 km/h (3 mph) within 20 seconds, the transfer case will remain in its original state. This will be indicated in the instrument cluster.

With the vehicle moving less than 5 km/h (3 mph) and the transmission in N (Neutral), attempt the shift again.

Shifting Out of 4↓

1. The vehicle must be stopped or moving less than 5 km/h (3 mph) with the transmission in N (Neutral) and the ignition on. It is best for the vehicle to be moving 1.6 to 3.2 km/h (1 to 2 mph).
2. Press 4↑, AUTO, or 2↑. The actual 4x4 shift request is only made after the button is released. The 4x4 graphic will remain flashing until the shift request has completed. A DIC message displays to indicate the state of the request.

   Once the 4x4 shift has completed, the DIC message disappears, the 4x4 graphic stops flashing, and the current setting is indicated.

   If vehicle speed is higher when shift request occurs, a DIC message displays. Reduce vehicle speed.

If the transmission is not in N (Neutral) when shift request occurs, DIC messages will display. The vehicle will allow 20 seconds for this shift to occur. After this time, a graphic in the instrument cluster will indicate that the transfer case is in 4 ↓.

Caution
Shifting the transmission into gear before the requested mode indicator light has stopped flashing could damage the transfer case.

If the transmission is not shifted into N (Neutral) or the vehicle has not slowed to 5 km/h (3 mph) within 20 seconds, the transfer case will remain in its original state. This will be indicated in the instrument cluster.

With the vehicle moving less than 5 km/h (3 mph), and the transmission in N (Neutral), attempt the shift again.

Shifting Into N (Neutral)

To shift into N (Neutral):

1. Start the vehicle.
2. Shift the transmission to N (Neutral).
3. Shift the transfer case to 2↑.
4. Apply the parking brake and/or brake pedal.
5. Press 2↑ five times in 10 seconds until the N (Neutral) graphic starts flashing in the instrument cluster. When the shift is complete, the graphic stops flashing. If the parking brake and/or brake pedal is not applied within 20 seconds, the transfer case will remain in the original state.
6. If the transmission is not shifted into N (Neutral) or the vehicle has not slowed to 5 km/h (3 mph) within 20 seconds, the transfer case will remain in its original state. This will be indicated in the instrument cluster.

Shifting Out of N (Neutral)

To shift out of N (Neutral):

1. Turn the ignition on with the engine off. See *Ignition Positions (Key Access)* ⇨ *219* or *Ignition Positions (Keyless Access)* ⇨ *221*.
2. Set the parking brake. See *Electric Parking Brake* ⇨ *244*.
3. Shift the transmission to N (Neutral).
4. Shift the transfer case to 2↑. Transfer case shifts out of N (Neutral) can only be made into 2↑. When the shift to 2↑ is complete, the graphic in the instrument cluster will stop flashing. If the transfer case cannot complete a shift, the graphic will return to the previously selected setting.

Single Speed Transfer Case

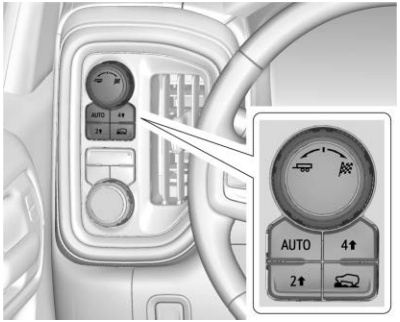

If equipped, the transfer case controls are used to shift into and out of four-wheel drive.

To shift the transfer case, press the desired button. The graphic in the instrument cluster will flash while a shift is in progress. The graphic displayed will change to indicate the setting requested.

When the shift is complete the graphic will stop flashing. The DIC message turns off once the shift is complete. If the transfer case

cannot complete a shift request, it will go back to its last chosen setting.

The settings are:

2↑ (Two-Wheel Drive High) : Use for driving on most streets and highways. The front axle is not engaged. This setting provides the best fuel economy.

4↑ (Four-Wheel Drive High) : Use this setting when extra traction is needed, such as when driving on snowy or icy roads, when off-roading, or when plowing snow.

AUTO (Automatic Four-Wheel Drive)

Use when road surface conditions are variable. When driving in AUTO, the front axle is engaged, and the vehicle's power is sent to the front and rear wheels automatically based on driving conditions. This setting provides slightly lower fuel economy than 2↑.

Shifts between 2↑, 4↑, and AUTO

Any of these shifts can be made at normal driving speed.

The actual 4x4 shift request is only made after the button is released. The 4x4 graphic will remain flashing until the shift request has completed. A DIC message displays.

Once the 4x4 shift has completed, the DIC message disappears, the 4x4 graphic stops flashing, and the current setting is indicated.

The actual 4x4 shift request is only made after the button is released. The 4x4 graphic will remain flashing until the shift request has completed.

A DIC message displays. Once the 4x4 shift has completed, the DIC message disappears, the 4x4 graphic stops flashing, and the current setting is indicated.

Brakes

Antilock Brake System (ABS)

This vehicle has an Antilock Brake System (ABS), an advanced electronic braking system that helps prevent a braking skid.

If there is a problem with ABS, this warning light stays on. See *Antilock Brake System (ABS) Warning Light* ⇨ *155*.

If driving safely on a wet road and it becomes necessary to slam on the brakes and continue braking to avoid a sudden obstacle, a computer senses the wheels are slowing down. If one of the wheels is about to stop rolling, the computer will separately work the brakes at each wheel.

ABS can change the brake pressure to each wheel, as required, faster than any driver could. This can help you steer around the obstacle while braking hard.

As the brakes are applied, the computer keeps receiving updates on wheel speed and controls braking pressure accordingly.

Remember: ABS does not change the time needed to get a foot up to the brake pedal or always decrease stopping distance. If you get too close to the vehicle in front of you, there will not be enough time to apply the brakes if that vehicle suddenly slows or stops. Always leave enough room up ahead to stop, even with ABS.

Using ABS

Do not pump the brakes. Just hold the brake pedal down firmly and let ABS work. You may hear noise or feel vibration while the ABS is operating.

The Traction Control System (TCS)/ StabiliTrak indicator light will flash to indicate that ABS is active. When ABS is active, it may indicate that road surfaces are slippery. Braking sooner may be required for driving conditions.

Braking in Emergencies

ABS allows you to steer and brake at the same time. In many emergencies, steering can help more than even the very best braking.

Electric Parking Brake

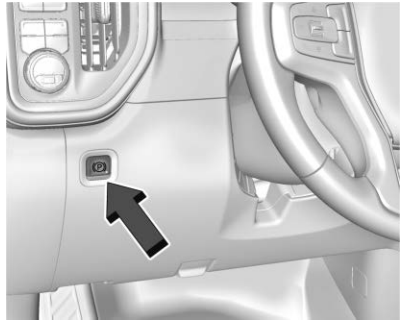

The vehicle has an Electric Parking Brake (EPB). The EPB can always be activated, even if the ignition is off. To prevent draining the battery, avoid repeated cycles of the EPB when the engine is not running.

The system has a Ⓟ or PARK Electric Parking Brake light, and a Service Parking Brake light. See *Electric Parking Brake Light* ⇨ *154* and *Service Electric Parking Brake Light* ⇨ *154*. There are also parking brake-related Driver Information Center (DIC) messages.

Before leaving the vehicle, check for the Ⓟ or PARK light to ensure that the parking brake is applied.

EPB Apply

To apply the EPB:

1. Be sure the vehicle is at a complete stop.
2. Press the EPB switch momentarily.

The Ⓟ or PARK light will flash and then stay on once the EPB is fully applied. If the Ⓟ or PARK light flashes continuously, then the EPB

is only partially applied or there is a problem with the EPB. A DIC message will display. Release the EPB and try to apply it again. If the light does not come on, or keeps flashing, have the vehicle serviced. Do not drive the vehicle if the (P) or PARK light is flashing. See your dealer. See *Electric Parking Brake Light* ⇨ *154*.

If the (P) light is on, press the EPB switch and hold it. Continue to hold the switch until the (P) or PARK light remains on. If the (P) light remains on, see your dealer.

If the EPB is applied while the vehicle is moving, the vehicle will decelerate as long as the switch is pressed. If the switch is pressed until the vehicle comes to a stop, the EPB will remain applied.

The vehicle may automatically apply the EPB in some situations when the vehicle is not moving. This is normal, and is done to periodically check the correct operation of the EPB system.

If the EPB fails to apply, block the rear wheels to prevent vehicle movement.

EPB Release

To release the EPB:

1. Turn the ignition on or to ACC/ACCESSORY.
2. Apply and hold the brake pedal.
3. Press the EPB switch momentarily.

The EPB is released when the (P) or PARK light is off.

If the (P) light is on, release the EPB by pressing and holding the EPB switch. Continue to hold the switch until the (P) or PARK light is off. If either light stays on after release is attempted, see your dealer.

Caution

Driving with the parking brake on can overheat the brake system and cause premature wear or damage to brake system parts. Make sure that the parking brake is fully released and the brake warning light is off before driving.

Automatic EPB Release

The EPB will automatically release if the vehicle is running, placed into gear, and an attempt is made to drive away. Avoid rapid acceleration when the EPB is applied, to preserve parking brake lining life.

Brake Assist

The Brake Assist feature assists in stopping or decreasing vehicle speed in emergency driving conditions. This feature uses the Electronic Brake Control Module (EBCM) which controls the hydraulic brake circuits to detect when the driver has quickly and forcefully

applied the brake pedal in an attempt to quickly stop or slow down the vehicle and to provide additional braking beyond a normal brake pedal apply. Minor noise during this time is normal and the brake pedal should be applied as the driving dictates. The Brake Assist feature will automatically disengage when the brake pedal is released or brake pedal pressure is quickly decreased.

Hill Start Assist (HSA)

⚠ Warning

Do not rely on the HSA feature. HSA does not replace the need to pay attention and drive safely. You may not hear or feel alerts or warnings provided by this system. Failure to use proper care when driving may result in injury, death, or vehicle damage. See *Defensive Driving* ⇨ *200*.

This feature is designed to prevent the vehicle from rolling, either forward or rearward, during vehicle drive off. HSA will be automatically activated after the vehicle has come to a complete standstill on a grade. During the transition period between when the brake pedal is released and the accelerator pedal is pressed, HSA holds the braking pressure to ensure that there is no rolling. The brakes will automatically release when the accelerator pedal is applied. It will not activate if the vehicle is in a drive gear and facing downhill, or if the vehicle is facing uphill and in R (Reverse).

Ride Control Systems

Traction Control/ Electronic Stability Control

System Operation

The vehicle has a Traction Control System (TCS) and StabiliTrak/ Electronic Stability Control (ESC), an electronic stability control system. These systems help limit wheel spin and assist the driver in maintaining control, especially on slippery road conditions.

TCS activates if it senses any of the drive wheels are spinning or beginning to lose traction. When this happens, TCS applies the brakes to the spinning wheels and reduces engine power to limit wheel spin.

StabiliTrak/ESC activates when the vehicle senses a difference between the intended path and the direction the vehicle is actually traveling. StabiliTrak/ESC selectively applies braking pressure to any one of the vehicle wheel brakes to assist the

driver in keeping the vehicle on the intended path. Trailer Sway Control (TSC) is also on automatically when the vehicle is started. See *Trailer Sway Control (TSC)* ⇨ *298*.

If cruise control is being used and traction control or StabiliTrak/ESC begins to limit wheel spin, cruise control will disengage. Cruise control may be turned back on when road conditions allow.

Both systems come on automatically when the vehicle is started and begins to move. The systems may be heard or felt while they are operating or while performing diagnostic checks. This is normal and does not mean there is a problem with the vehicle.

It is recommended to leave both systems on for normal driving conditions, but it may be necessary to turn TCS off if the vehicle gets stuck in sand, mud, ice, or snow. See *If the Vehicle Is Stuck* ⇨ *210* and "Turning the Systems Off and On" later in this section.

When the transfer case (if equipped) is in Four-Wheel Drive Low, the stability system is automatically disabled, OFF comes on, and the appropriate message will appear on the Driver Information Center (DIC). Both traction control and StabiliTrak/ESC are automatically disabled in this condition.

The indicator light for both systems is in the instrument cluster. This light will:

- Flash when TCS is limiting wheel spin.
- Flash when StabiliTrak/ESC is activated.
- Turn on and stay on when either system is not working.

If either system fails to turn on or to activate, a message displays in the Driver Information Center (DIC), and comes on and stays on to indicate that the system is inactive and is not assisting the driver in maintaining control. The vehicle is safe to drive, but driving should be adjusted accordingly.

If comes on and stays on:

1. Stop the vehicle.
2. Turn the engine off and wait 15 seconds.
3. Start the engine.

Drive the vehicle. If comes on and stays on, the vehicle may need more time to diagnose the problem. If the condition persists, see your dealer.

Turning the Systems Off and On

The button for TCS and StabiliTrak/ESC is on the center stack.

Caution
Do not repeatedly brake or accelerate heavily when TCS is off. The vehicle driveline could be damaged.

To turn off only TCS, press and release OFF. The traction off light displays in the instrument cluster. The appropriate message will display in the DIC. To turn TCS on again, press and release OFF. The traction off light displayed in the instrument cluster will turn off.

If TCS is limiting wheel spin when OFF is pressed, the system will not turn off until the wheels stop spinning.

To turn off both TCS and StabiliTrak/ESC, press and hold OFF until the traction off light and the StabiliTrak/ESC OFF light OFF come on and stay on in the instrument cluster, then release. The appropriate message will display in the DIC.

To turn TCS and StabiliTrak/ESC on again, press and release OFF. The traction off light and the StabiliTrak/ESC OFF light OFF in the instrument cluster turn off.

StabiliTrak/ESC will automatically turn on if the vehicle exceeds 56 km/h (35 mph). Traction control will remain off.

The vehicle has a Trailer Sway Control (TSC) feature and a Hill Start Assist (HSA) feature. See *Trailer Sway Control (TSC)* ⇨ *298* or *Hill Start Assist (HSA)* ⇨ *246*.

Adding accessories can affect the vehicle performance. See *Accessories and Modifications* ⇨ *317*.

Hill Descent Control (HDC)

If equipped, Hill Descent Control (HDC) sets and maintains vehicle speed while driving down steep grades in a forward or reverse gear. The HDC switch is on the center stack, below the climate controls.

Press to enable or disable HDC. Vehicle speed must be below 50 km/h (31 mph).

When enabled, the HDC light displays on the instrument cluster.

A blinking HDC light indicates the system is actively applying the brakes to maintain vehicle speed. HDC can maintain vehicle speeds between 1 and 22 km/h (1 and 14 mph) on grades greater than or equal to 10%.

If HDC is to be used for more than three minutes or on grades steeper than 25%, the transfer case should be put into Four-Wheel Drive Low (4 ↓) to reduce the possibility of brake overheating.

Noise from the Electronic Brake Control Module (EBCM) is normal when HDC is active.

When HDC is activated, the initial HDC speed is set to the current driving speed. It can be increased or decreased by pressing +RES or SET- on the steering wheel, or by applying the accelerator or brake pedal. This adjusted speed becomes the new set speed.

HDC will remain enabled between 30 and 60 km/h (19 and 37 mph); however, vehicle speed cannot be set or maintained in this range. HDC will automatically disable if the vehicle speed is above 80 km/h (50 mph) or above 60 km/h (37 mph) for at least 30 seconds.

must be pressed again to re-enable HDC. HDC may disable after an extended period of use.

If this happens, HDC will require time to cool down. The length of time HDC remains active depends on road conditions, grade, set speed, vehicle loading, and outside temperature.

When enabled, if the vehicle speed is above 30 km/h (19 mph) and below 60 km/h (37 mph), a DIC message will display.

Driver Mode Control

This feature adds a sportier feel, provides a more comfortable ride, or assists in different weather conditions or terrain to optimize driving performance. Depending on the option package, available features, and mode selected, the suspension, steering, and powertrain will change settings to achieve the desired mode characteristics. Selecting the various Driver Modes enhances the ride performance for the road conditions and the selected mode.

Mode Activation

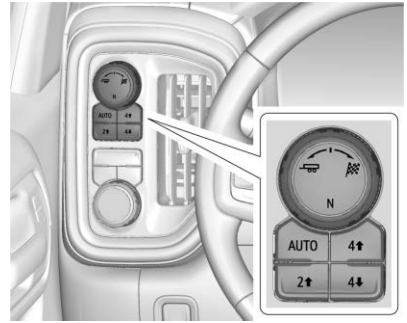

To activate modes, rotate the Drive Mode knob left or right to the desired mode.

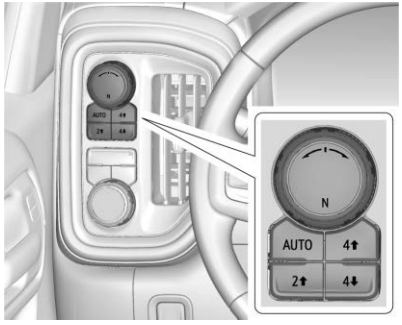

Vehicles without mode graphics on the knob will have a menu selection screen in the instrument cluster to select the desired mode. When the Drive Mode knob is rotated, the mode list will display the next available mode.

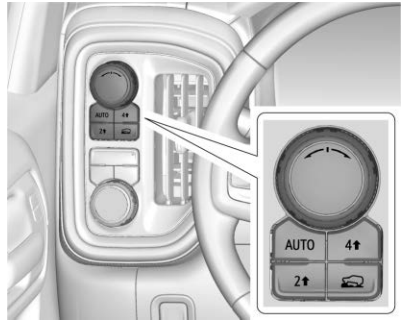

If equipped, select Terrain Mode by pressing the Terrain Mode button, below the 4 ↑ transfer case button.

Modes:

Tour Mode

Use for normal city and highway driving to provide a smooth, soft ride. When selected, there is no indicator in the instrument cluster.

Sport Mode

Use where road conditions or personal preference demand a more controlled response.

When in Sport Mode, the vehicle will shift automatically but may hold a lower gear longer than it would in the normal driving mode based on braking, throttle input, and vehicle lateral acceleration. See *Automatic Transmission* ⇨ *231*. The steering will change to provide more precise control. The continuous damping will change to provide better cornering performance.

When selected, the Sport Mode light displays in the instrument cluster.

Snow Mode

Use when more traction is needed during slippery conditions. The vehicle will upshift normally when the vehicle is moving. The acceleration will adjust to help provide a smoother launch.

Snow Mode is only available on two-wheel-drive vehicles. When selected, the Snow Mode light displays in the instrument cluster.

Off-Road Mode

Use to improve driving at moderate speeds, on grass, gravel, dirt, unpaved roads, or snow-covered roads that have not been groomed or plowed.

The accelerator pedal will be more sensitive to provide finer control of the torque at the wheels. Electronic Stability Control (ESC), the Antilock Brake System (ABS), and the Traction Control System (TCS) will change for optimal off-road performance. Use this mode for public off-road recreational driving. See *Off-Road Driving* ⇨ *202*.

When selected, the Off-Road Mode indicator light displays in the instrument cluster.

Tow/Haul Mode

This feature assists when pulling a heavy trailer or a large or heavy load. See *Tow/Haul Mode* ⇨ *237*.

Tow/Haul Mode is designed to be most effective when the vehicle and trailer combined weight is at least 75% of the vehicle's Gross Combined Weight Rating (GCWR). See "Weight of the Trailer" under *Trailer Towing* ⇨ *285*.

Tow/Haul Mode is most useful when pulling a heavy trailer or a large or heavy load under the following conditions:

- Through rolling terrain
- In stop-and-go traffic
- In busy parking lots where improved low speed control of the vehicle is desired

Operating the vehicle in Tow/Haul Mode when lightly loaded or with no trailer at all will not cause damage. However, there is no benefit to selecting Tow/Haul Mode when the vehicle is unloaded. Such a selection when unloaded may result in unpleasant engine and transmission driving characteristics and reduced fuel economy.

When selected, the Tow/Haul Mode light will display in the instrument cluster.

If the vehicle is turned off with Tow/Haul Mode active, Tow/Haul Mode will remain active after the vehicle has been turned on if the vehicle was turned off for less than four hours. Otherwise, the vehicle will start up in Tour Mode.

Terrain Mode

Use for finer control during low speed, off-road driving. When using this mode it will mimic the characteristics of four-wheel-drive low without the torque capabilities.

Use when:

- Traveling on very rough roads at very low speeds, such as a two-track or heavily rutted road.
- Traveling slowly in grassy fields.
- Pulling a boat out of the water on a trailer.
- Using the vehicle for public off-road recreational driving. See *Off-Road Driving* ⇨ *202* and *Hill and Mountain Roads* ⇨ *208*.

When in Terrain Mode, the vehicle will shift automatically but may hold a lower gear longer to maximize engine torque. The steering will change to provide more precise control. A unique pedal map, transmission shift pattern, and rpm control are utilized to give better control at lower speeds and over rough terrain. When the vehicle comes to a stop, Vehicle Hold is engaged. TCS will be optimized for maximum torque transfer across axles, and Active Braking During Lift Throttle will be engaged.

Active Braking During Lift Throttle:

- Automatically applies light braking, similar to heavy engine braking of four-wheel-drive low.
- In D (Drive), the vehicle will apply light braking until the vehicle is at idle speeds. In Manual L1 and Manual L2, moderate braking may stop the vehicle.
- Trailer braking is reduced.

Terrain Mode Drive Select	Expected Vehicle Behavior	Ideal Terrain
Drive (L3-Lx)	Minor deceleration when off throttle and mild ability to modulate throttle, mimicks performance of 4-low without torque multiplication.	Grassy fields, mild two tracks, rutted roads, large rolling hills,
L2	Moderate deceleration when off throttle and moderate ability to modulate throttle. Will bring vehicle to a stop in most cases.	Mild rock crawling, heavy ruts, short, steeper grades,
L1	Significant deceleration when off throttle and significant ability to modulate throttle. Will bring vehicle to a stop in most cases.	Rock crawling down hill

Active Braking During Lift Throttle will reduce the back and forth between the accelerator and brake pedals.

Vehicle Hold Features:

- When the vehicle comes to a stop on an incline grade in forward gear or on a decline grade in reverse gear, Vehicle Hold is engaged until the accelerator pedal is pressed.
- When the vehicle is in forward gear on a decline, the vehicle is allowed to creep down the hill when brake pedal is released without pressing accelerator pedal. The vehicle will also creep forward on flat ground.
- If the driver seat belt is removed and the driver door is opened while vehicle is being held, EPB will be engaged.
- EPB will engage if vehicle is held for an extended period.

Terrain Mode is only available on vehicles equipped with the single speed transfer case.

Terrain Mode can only be active when:

- Vehicle speed is less than 80 km/h (50 mph).
- The transfer case is in 4 ↑.

Frequent use of this mode may cause brake wear due to the light braking.

The vehicle will automatically exit the mode if the brakes get too hot. Terrain mode can be turned back on after the brakes have cooled.

When Terrain Mode is selected:

- Auto Engine Start/Stop will be disabled.
- The Terrain Mode indicator displays on the instrument cluster.

Limited-Slip Differential

If equipped, the limited-slip differential can give more traction on snow, mud, ice, sand, or gravel. It works like a standard axle most of the time, but when traction is low, this feature allows the drive wheel with the most traction to move the vehicle. For vehicles with the limited-slip differential, driven under severe conditions, the rear axle fluid should be changed. See *Maintenance Schedule* ⇨ *419*.

Locking Rear Axle

Vehicles with a locking rear axle can give more traction on snow, mud, ice, sand, or gravel. It works like a standard axle most of the time, but when traction is low, this feature will allow the rear wheel with the most traction to move the vehicle.

Cruise Control

⚠ Warning

Cruise control can be dangerous where you cannot drive safely at a steady speed. Do not use cruise control on winding roads or in heavy traffic.

Cruise control can be dangerous on slippery roads. On such roads, fast changes in tire traction can cause excessive wheel slip, and you could lose control. Do not use cruise control on slippery roads.

If equipped with cruise control, a speed of about 40 km/h (25 mph) or more can be maintained without keeping your foot on the accelerator. Cruise control does not work at speeds below about 40 km/h (25 mph).

If the cruise control is being used and the Traction Control System (TCS) or StabiliTrak/Electronic Stability Control (ESC) begins to limit wheel spin, the cruise control

will automatically disengage. See *Traction Control/Electronic Stability Control* ⇨ *246*. If a collision alert occurs when cruise control is activated, cruise control is disengaged. See *Forward Collision Alert (FCA) System* ⇨ *264*. When road conditions allow you to safely use it again, cruise control can be turned back on.

Turning off the TCS or StabiliTrak/ESC system will disengage the cruise control.

If the brakes are applied, cruise control disengages.

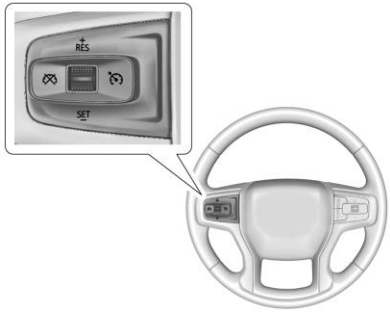

: Press to turn cruise control on or off. A white indicator comes on or off in the instrument cluster.

+RES : If there is a set speed in memory, press the control up briefly to resume to that speed or press and hold to accelerate. If cruise control is already engaged, use to increase vehicle speed.

SET− : Press the control down briefly to set the speed and activate cruise control. If cruise control is already engaged, use to decrease vehicle speed.

: Press to disengage cruise control without erasing the set speed from memory.

Setting Cruise Control

If is on when not in use, SET− or +RES could get pressed and go into cruise when not desired. Keep off when cruise is not being used.

1. Press to turn the cruise system on.
2. Get up to the desired speed.
3. Press and release SET−.
4. Remove your foot from the accelerator.

The cruise control indicator on the instrument cluster turns green after cruise control has been set to the desired speed. See *Instrument Cluster* ⇨ *140*.

Resuming a Set Speed

If the cruise control is set at a desired speed and then the brakes are applied or is pressed, the cruise control is disengaged without erasing the set speed from memory.

Once the vehicle reaches about 40 km/h (25 mph) or more, press RES+ up briefly. The vehicle returns to the previously set speed.

Increasing Speed While Using Cruise Control

Do one of the following:

- Press and hold +RES up until the desired speed is reached, then release it.

- To increase vehicle speed in small increments, press +RES up briefly. For each press, the vehicle goes about 1 km/h (1 mph) faster.

The speedometer reading can be displayed in either English or metric units. See *Instrument Cluster* ⇨ *140*. The increment value used depends on the units displayed.

Reducing Speed While Using Cruise Control

Do one of the following:

- Press and hold SET– down until the desired lower speed is reached, then release it.
- To slow down in small increments, press SET– down briefly. For each press, the vehicle goes about 1 km/h (1 mph) slower.

The speedometer reading can be displayed in either English or metric units. See *Instrument Cluster* ⇨ *140*. The increment value used depends on the units displayed.

Passing Another Vehicle While Using Cruise Control

Use the accelerator pedal to increase the vehicle speed. When you take your foot off the pedal, the vehicle will slow down to the previously set cruise speed. While pressing the accelerator pedal or shortly following the release to override cruise control, briefly pressing SET– will result in cruise control set to the current vehicle speed.

Using Cruise Control on Hills

How well the cruise control works on hills depends on the vehicle speed, the load, and the steepness of the hills. When going up steep hills, pressing the accelerator pedal may be necessary to maintain vehicle speed.

While going downhill, cruise braking helps maintain driver selected speed.

Cruise Grade Braking is enabled when the vehicle is started and cruise control is active. It is not enabled in Range Selection Mode. It assists in maintaining driver selected speed when driving on downhill grades by using the engine and transmission to slow the vehicle.

For other forms of descent control, see *Hill Descent Control (HDC)* ⇨ *248*, *Automatic Transmission* ⇨ *231*, and *Tow/Haul Mode* ⇨ *237*.

Ending Cruise Control

There are four ways to end cruise control:

- Step lightly on the brake pedal.
- Press ⊘.
- Shift the transmission to N (Neutral).
- To turn off cruise control, press ⊘.

Erasing Speed Memory

The cruise control set speed is erased from memory if ⊘ is pressed or the ignition is turned off.

Driver Assistance Systems

This vehicle may have features that work together to help avoid crashes or reduce crash damage while driving, backing, and parking. Read this entire section before using these systems.

⚠ Warning

Do not rely on the Driver Assistance Systems. These systems do not replace the need for paying attention and driving safely. You may not hear or feel alerts or warnings provided by these systems. Failure to use proper care when driving may result in injury, death, or vehicle damage. See *Defensive Driving* ⇨ *200*.

Under many conditions, these systems will not:

(Continued)

Warning (Continued)

- Detect children, pedestrians, bicyclists, or animals.
- Detect vehicles or objects outside the area monitored by the system.
- Work at all driving speeds.
- Warn you or provide you with enough time to avoid a crash.
- Work under poor visibility or bad weather conditions.
- Work if the detection sensor is not cleaned or is covered by ice, snow, mud, or dirt.
- Work if the detection sensor is covered up, such as with a sticker, magnet, or metal plate.
- Work if the area surrounding the detection sensor is damaged or not properly repaired.

(Continued)

Warning (Continued)

Complete attention is always required while driving, and you should be ready to take action and apply the brakes and/or steer the vehicle to avoid crashes.

Audible or Safety Alert Seat

Some driver assistance features alert the driver of obstacles by beeping. To change the volume of the warning chime, see “Comfort and Convenience” under *Vehicle Personalization* ⇨ *170*.

If equipped with the Safety Alert Seat, the driver seat cushion may provide a vibrating pulse alert instead of beeping. To change this, see “Collision/Detection Systems” under *Vehicle Personalization* ⇨ *170*.

Cleaning

Depending on vehicle options, keep these areas of the vehicle clean to ensure the best driver assistance feature performance. Driver

Information Center (DIC) messages may display when the systems are unavailable or blocked.

- Front and rear bumpers and the area below the bumpers
- Front grille and headlamps
- Front camera lens in the front grille or near the front emblem
- Front side and rear side panels
- Outside of the windshield in front of the rearview mirror
- Side camera lens on the bottom of the outside mirrors
- Rear side corner bumpers
- Rear Vision Camera in the tailgate handle

Assistance Systems for Parking or Backing

If equipped, the Rear Vision Camera (RVC), Surround Vision, Rear Park Assist (RPA), Front Park Assist (FPA), and Rear Cross Traffic Alert (RCTA) may help the driver park or avoid objects. Always check around the vehicle when parking or backing.

The RVC, RPA, and Surround Vision will not work properly if the tailgate is down. If the tailgate is down, do not use these systems.

Rear Vision Camera (RVC)

When the vehicle is shifted into R (Reverse), the RVC displays an image of the area behind the vehicle in the infotainment display. The previous screen displays when the vehicle is shifted out of R (Reverse) after a short delay. To return to the previous screen sooner, press any button on the infotainment system, shift into P (Park), or, while in D (Drive), reach a vehicle speed of approximately 12 km/h (8 mph). The rear vision camera is in the tailgate handle.

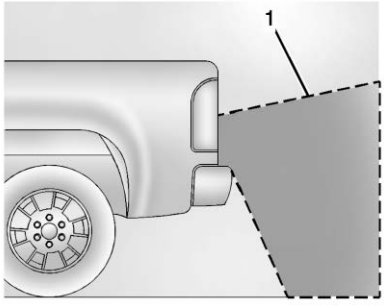

1. View Displayed by the Rear Vision Camera

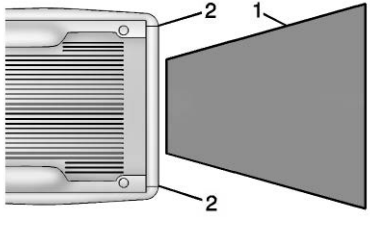

1. View Displayed by the Rear Vision Camera
2. Corners of the Rear Bumper

Displayed images may be farther or closer than they appear. The area displayed is limited and objects that are close to either corner of the bumper or under the bumper do not display.

A warning triangle may display to show that Rear Park Assist (RPA) has detected an object. This triangle changes from amber to red and increases in size the closer the object.

If equipped with Hitch View, see “Surround Vision” following.

Surround Vision (360 Degrees)

If equipped, the Surround Vision system can display various views surrounding the vehicle in the infotainment display using four cameras mounted around the vehicle. The front camera is in the grille under the front emblem, the side cameras are on the bottom of the outside mirrors, and the rear camera is in the tailgate handle.

The Surround Vision system can be accessed by selecting CAMERA in the infotainment display or when the vehicle is shifted into R (Reverse). To return to the previous screen sooner, press any button on the infotainment system, shift into P (Park), or, while in D (Drive), reach a vehicle speed of approximately 12 km/h (8 mph).

⚠ Warning

The Surround Vision cameras have blind spots and will not display all objects near the corners of the vehicle. Folding outside mirrors that are out of position may not display surround view correctly. Always check around the vehicle when parking or backing.

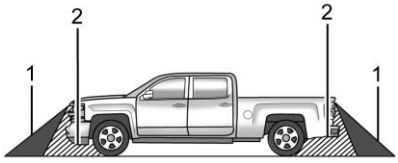

1. Views Displayed by the Surround Vision Cameras
2. Area Not Shown

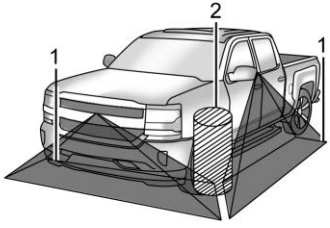

1. Views Displayed by the Surround Vision Cameras
2. Area Not Shown

⚠ Warning

The camera(s) do not display children, pedestrians, bicyclists, crossing traffic, animals, or any other object outside of the cameras' field of view, below the bumper, or under the vehicle. Shown distances may be different from actual distances. Do not drive or park the vehicle using only these camera(s). Always check behind and around the vehicle before driving. Failure to use proper care may result in injury, death, or vehicle damage.

Camera Views

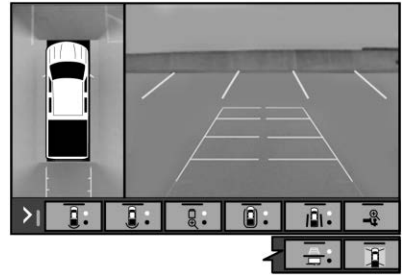

Touch the camera view buttons along the bottom of the infotainment display.

Front/Rear Standard View : Displays an image of the area in front or behind the vehicle. Touch Front/Rear Standard View on the infotainment display when a camera view is active. Touching the button multiple times will toggle between front and rear camera views.

If equipped, the front view camera also displays when the Park Assist system detects an object within 30 cm (12 in).

Front/Rear Junction View : Displays a front or rear cross traffic view that shows objects directly to the left and right of the front or back of the vehicle. Touch Junction View on the infotainment display when a camera view is active. Touching the button multiple times will toggle between front and rear camera views.

Front/Rear Overhead View : Displays a front or rear overhead view of the vehicle. Touching the button will toggle between the two views.

Front/Rear Bowl View : Displays a view of the vehicle from either the front or the back of the vehicle. Touch Bowl View on the infotainment display when a camera view is active. Touching the button multiple times will toggle between forward and rearward views. Park Assist and RCTA overlays are not available when Bowl view is active.

Side Forward/Rearward View : Displays a view that shows objects next to the front or rear sides of the vehicle. Touch Side Forward/ Rearward View on the infotainment display when a camera view is active. Touching the button multiple times will toggle between forward and rearward views. Park Assist and RCTA overlays are not available when Side Forward/ Rearward view is active.

Hitch View : Assists while connecting to a trailer. Displays a zoomed-in view of the hitch to help align the vehicle's hitch ball with the trailer coupler. Shifting into P (Park) while in this view will automatically engage the Electronic Parking Brake (EPB).

Guidance Lines : Displays available guidelines, including standard and Hitch Guidance. When enabled, the guidelines will display when the vehicle is shifted into R (Reverse).

Top Down View : Displays an image of the area surrounding the vehicle, along with the rear camera view in the infotainment display. The rear camera view will be replaced by the front camera view after shifting from R (Reverse) to a forward gear or when the vehicle is moving forward slower than 12 km/h (8 mph). This view can only be enabled in Front/Rear Standard View by touching the Top Down View button when the CAMERA view is active.

Hitch Guidance

This feature displays a single, centered guideline on the camera display to assist with aligning a vehicle's hitch ball with a trailer coupler. Select the trailer guidance line button, then align the trailer guidance line over the trailer coupler. Continuously steer the vehicle to keep the guidance line centered on the coupler when backing. RVC Park Assist overlays will not display when the trailer guidance line is active. Hitch Guidance is only available in Standard View.

To check the trailer when in a forward gear above 12 km/h (8 mph), touch CAMERA on the infotainment display to view the rear

camera. Touch X to exit the view or it will be removed automatically after eight seconds.

⚠ Warning

Use Hitch Guidance only to help back the vehicle to a trailer hitch or, when traveling above 12 km/h (8 mph), to briefly check the status of your trailer. Do not use for any other purpose, such as making lane change decisions. Before making a lane change, always check the mirrors and glance over your shoulder. Improper use could result in serious injury to you or others.

Surround Vision (270 Degrees with Trailer Camera Views)

If equipped, the Surround Vision (270 Degrees) has additional trailering views and no Front Vision Camera. It can display various views surrounding the vehicle in the infotainment display using three cameras mounted around the vehicle. The side cameras are on the bottom of the outside mirrors and the rear camera is in the tailgate handle. A fourth camera can be mounted to the rear of a trailer to allow access to all possible camera features. See your dealer for an accessory fourth trailer camera.

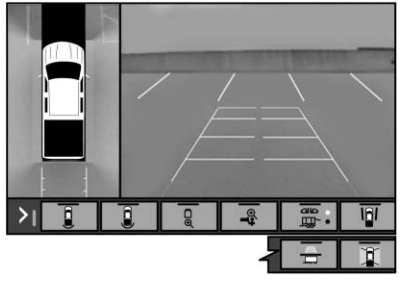

The Surround Vision (270 Degrees) can be accessed by selecting CAMERA in the infotainment display or when the vehicle is shifted into R (Reverse). To return to the previous screen sooner, press any button on the infotainment system, shift into P (Park), or, while in D (Drive), reach a vehicle speed of approximately 12 km/h (8 mph).

Touch the camera view buttons along the bottom of the infotainment display.

- Rear Standard View
- Rear Junction View
- Rear Overhead View
- Hitch View
- Trailer Views: Mirror Trailer View, Rear Trailer Camera View, Rear Trailer Combo View. Touching this button multiple times will toggle between the available views.
- Side Forward/Rearward View
- Guidance Lines: Touching this button will toggle the guidelines in select rear camera views between Off, Standard Rear, and Hitch Guidance.
- Top Down View

Park Assist

With Front and Rear Park Assist, as the vehicle moves at speeds of less than 8 km/h (5 mph) the sensors on the bumpers may detect objects up to 1.2 m (4 ft) in front and 2.5 m (8 ft) behind the vehicle within a zone 25 cm (10 in) high off the ground and below bumper level. These detection distances may be shorter during warmer or humid weather. Blocked sensors will not detect objects and can also cause false detections. Keep the sensors clean of mud, dirt, snow, ice, and slush; and clean sensors after a car wash in freezing temperatures.

⚠ Warning

The Park Assist system does not detect children, pedestrians, bicyclists, animals, or objects located below the bumper or that are too close or too far from the vehicle. It is not available at speeds greater than 8 km/h

(Continued)

Warning (Continued)

(5 mph). To prevent injury, death, or vehicle damage, even with Park Assist, always check the area around the vehicle and check all mirrors before moving forward or backing.

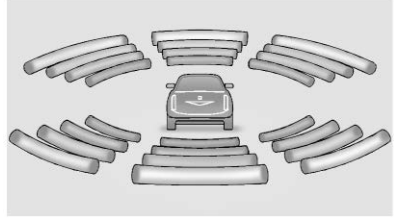

The instrument cluster may have a Park Assist display with bars that show “distance to object” and object location information for the Front and Rear Park Assist system. As the object gets closer, more bars light up and the bars change color from yellow to amber to red.

When an object is first detected in the rear, one beep will be heard from the rear, or both sides of the Safety Alert Seat will pulse two times. When an object is very close (<0.4 m (1.5 ft) in the vehicle rear or <0.3 m (1 ft) in the vehicle front), a continuous beep will sound from the rear or front depending on object location, or both sides of the Safety Alert Seat will pulse five times. Beeps for FPA are higher pitched than for RPA.

Rear Cross Traffic Alert (RCTA)

If equipped, when the vehicle is shifted into R (Reverse), RCTA shows a red warning triangle with a left or right pointing arrow on the infotainment display to warn of traffic coming from the left or right. This system detects objects coming from up to 20 m (65 ft) from the left or right side of the vehicle. When an object is detected, either three beeps sound from the left or right or three Safety Alert Seat pulses occur on the left or right side, depending on the direction of the detected vehicle.

Use caution while backing up when towing a trailer, as the RCTA detection zones that extend out from the back of the vehicle do not move further back when a trailer is towed.

RCTA is disabled when the trailer connection status is displayed.

RCTA can be turned off through "Collision/Detection Systems" under *Vehicle Personalization* ⇨ *170*.

Turning the Features On or Off

Press P on the center stack to turn on or off the Front and Rear Park Assist. The indicator light next to the button comes on when the features are on and turns off when the features have been disabled.

Front and Rear Park Assist can be turned Off, On, or On with Towbar through vehicle personalization. See "Park Assist" under *Vehicle Personalization* ⇨ *170*. If Park Assist is turned off through vehicle personalization, the Park Assist button will be disabled. To turn Park Assist on again, select On in the vehicle personalization menu. The On with Towbar setting allows for Park Assist to work properly with a trailer hitch. Some larger trailer hitches may not be compatible.

Turn off Park Assist when towing a trailer.

To turn the RPA symbols on or off, see "Rear Camera Park Assist Symbols" under *Vehicle Personalization* ⇨ *170*.

Assistance Systems for Driving

If equipped, when driving the vehicle in a forward gear, Forward Collision Alert (FCA), Lane Departure Warning (LDW), Lane Keep Assist (LKA), Side Blind Zone Alert (SBZA), Lane Change Alert (LCA), Forward Automatic Braking (FAB), and/or the Front Pedestrian Braking (FPB) System can help to avoid a crash or reduce crash damage.

Forward Collision Alert (FCA) System

If equipped, the FCA system may help to avoid or reduce the harm caused by front-end crashes. When approaching a vehicle ahead too quickly, FCA provides a red flashing alert on the windshield and rapidly beeps or pulses the driver seat. FCA also lights an amber visual alert if following another vehicle much too closely.

FCA detects vehicles within a distance of approximately 60 m (197 ft) and operates at speeds above 8 km/h (5 mph).

⚠ Warning

FCA is a warning system and does not apply the brakes. When approaching a slower-moving or stopped vehicle ahead too rapidly, or when following a vehicle too closely, FCA may not provide a warning with enough time to help avoid a crash. It also may not provide any warning at all. FCA does not warn of pedestrians, animals, signs, guardrails, bridges, construction barrels, or other objects. Be ready to take action and apply the brakes. See *Defensive Driving* ⇨ *200*.

FCA can be disabled through vehicle personalization. See "Collision/Detection Systems" under *Vehicle Personalization* ⇨ *170*.

Detecting the Vehicle Ahead

FCA warnings will not occur unless the FCA system detects a vehicle ahead. When a vehicle is detected, the vehicle ahead indicator will display green. Vehicles may not be detected on curves, highway exit ramps, or hills, due to poor visibility; or if a vehicle ahead is partially blocked by pedestrians or other objects. FCA will not detect another vehicle ahead until it is completely in the driving lane.

⚠ Warning

FCA does not provide a warning to help avoid a crash, unless it detects a vehicle. FCA may not detect a vehicle ahead if the FCA sensor is blocked by dirt, snow,

(Continued)

Warning (Continued)

or ice, or if the windshield is damaged. It may also not detect a vehicle on winding or hilly roads, or in conditions that can limit visibility such as fog, rain, or snow, or if the headlamps or windshield are not cleaned or in proper condition. Keep the windshield, headlamps, and FCA sensors clean and in good repair.

Collision Alert

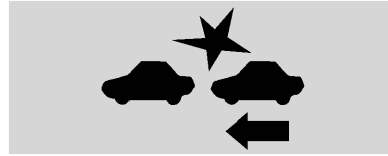

With Head-Up Display

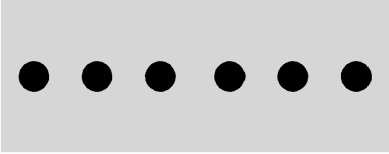

Without Head-Up Display

When your vehicle approaches another detected vehicle too rapidly, the red FCA display will flash on the windshield. Also, eight rapid high-pitched beeps will sound from the front, or both sides of the Safety Alert Seat will pulse five times. When this Collision Alert occurs, the brake system may prepare for driver braking to occur more rapidly which can cause a brief, mild deceleration. Continue to apply the brake pedal as needed. Cruise control may be disengaged when the Collision Alert occurs.

Tailgating Alert

The vehicle ahead indicator will display amber when you are following a vehicle ahead much too closely.

Selecting the Alert Timing

The Collision Alert control is on the steering wheel. Press to set the FCA timing to Far, Medium, or Near. The first button press shows the current setting on the DIC. Additional button presses will change this setting. The chosen setting will remain until it is changed and will affect the timing of both the Collision Alert and the Tailgating Alert features. The timing of both alerts will vary based on vehicle speed. The faster the vehicle speed, the farther away the alert will occur. Consider traffic and weather conditions when selecting the alert timing. The range of selectable alert timings may not be appropriate for all drivers and driving conditions.

Following Distance Indicator

The following distance to a moving vehicle ahead in your path is indicated in following time in seconds on the Driver Information Center (DIC). The minimum following time is 0.5 seconds away. If there is no vehicle detected ahead, or the vehicle ahead is out of sensor range, dashes will be displayed.

Unnecessary Alerts

FCA may provide unnecessary alerts for turning vehicles, vehicles in other lanes, objects that are not vehicles, or shadows. These alerts are normal operation and the vehicle does not need service.

Cleaning the System

If the FCA system does not seem to operate properly, this may correct the issue:

- Clean the outside of the windshield in front of the rearview mirror.
- Clean the entire front of the vehicle.
- Clean the headlamps.

Forward Automatic Braking (FAB)

If the vehicle has Forward Collision Alert (FCA), it also has FAB, which includes Intelligent Brake Assist (IBA). When the system detects a vehicle ahead in your path that is traveling in the same direction that you may be about to crash into, it can provide a boost to braking or automatically brake the vehicle. This can help avoid or lessen the severity of crashes when driving in a forward gear. Depending on the situation, the vehicle may automatically brake moderately or hard. This forward automatic braking can only occur if a vehicle is detected. This is shown by the FCA vehicle ahead indicator being lit. See *Forward Collision Alert (FCA) System* ⇨ *264*.

The system works when driving in a forward gear between 8 km/h (5 mph) and 80 km/h (50 mph). It can detect vehicles up to approximately 60 m (197 ft).

⚠ Warning

FAB is an emergency crash preparation feature and is not designed to avoid crashes. Do not rely on FAB to brake the vehicle. FAB will not brake outside of its operating speed range and only responds to detected vehicles.

FAB may not:

- Detect a vehicle ahead on winding or hilly roads.
- Detect all vehicles, especially vehicles with a trailer, tractors, muddy vehicles, etc.

(Continued)

Warning (Continued)

- Detect a vehicle when weather limits visibility, such as in fog, rain, or snow.
- Detect a vehicle ahead if it is partially blocked by pedestrians or other objects.

Complete attention is always required while driving, and you should be ready to take action and apply the brakes and/or steer the vehicle to avoid crashes.

FAB may slow the vehicle to a complete stop to try to avoid a potential crash. If this happens, FAB may engage the Electric Parking Brake (EPB) to hold the vehicle at a stop. Release the EPB or firmly press the accelerator pedal.

⚠ Warning

FAB may automatically brake the vehicle suddenly in situations where it is unexpected and undesired. It could respond to a turning vehicle ahead, guardrails, signs, and other non-moving objects. To override FAB, firmly press the accelerator pedal, if it is safe to do so.

Intelligent Brake Assist (IBA)

IBA may activate when the brake pedal is applied quickly by providing a boost to braking based on the speed of approach and distance to a vehicle ahead.

Minor brake pedal pulsations or pedal movement during this time is normal and the brake pedal should continue to be applied as needed. IBA will automatically disengage only when the brake pedal is released.

⚠ Warning

IBA may increase vehicle braking in situations when it may not be necessary. You could block the flow of traffic. If this occurs, take your foot off the brake pedal and then apply the brakes as needed.

FAB and IBA can be disabled. See “Collision/Detection Systems” under *Vehicle Personalization* ⇨ *170*.

⚠ Warning

Using FAB or IBA while towing a trailer could cause you to lose control of the vehicle and crash. Turn the system to Alert or Off when towing a trailer.

A system unavailable message may display if:

- The front of the vehicle or windshield is not clean.
- Heavy rain or snow is interfering with object detection.
- There is a problem with the StabiliTrak/Electronic Stability Control (ESC) system.

The FAB system does not need service.

Front Pedestrian Braking (FPB) System

If equipped, the FPB system may help avoid or reduce the harm caused by front-end crashes with nearby pedestrians when driving in a forward gear. FPB displays an amber indicator, 🚶, when a nearby pedestrian is detected directly ahead. When approaching a detected pedestrian too quickly, FPB provides a red flashing alert on the windshield and rapidly beeps or pulses the driver seat. FPB can provide a boost to braking or automatically brake the vehicle. This system includes Intelligent Brake Assist (IBA), and the Forward Automatic Braking (FAB) system may also respond to pedestrians. See *Forward Automatic Braking (FAB)* ⇨ *267*.

The FPB system can detect and alert to pedestrians in a forward gear at speeds between 8 km/h (5 mph) and 80 km/h (50 mph). During daytime driving, the system detects pedestrians up to a distance of approximately 40 m (131 ft). During nighttime driving, system performance is very limited.

⚠ Warning

FPB does not provide an alert or automatically brake the vehicle, unless it detects a pedestrian. FPB may not detect pedestrians, including children:

- When the pedestrian is not directly ahead, fully visible, or standing upright, or when part of a group.
- Due to poor visibility, including nighttime conditions, fog, rain, or snow.
- If the FPB sensor is blocked by dirt, snow, or ice.

(Continued)

Warning (Continued)

- If the headlamps or windshield are not cleaned or in proper condition.

Be ready to take action and apply the brakes. For more information, see *Defensive Driving* ⇨ *200*. Keep the windshield, headlamps, and FPB sensor clean and in good repair.

FPB can be set to Off, Alert, or Alert and Brake through vehicle personalization. See “Collision/ Detection Systems” under *Vehicle Personalization* ⇨ *170*.

Detecting the Pedestrian Ahead

FPB alerts and automatic braking will not occur unless the FPB system detects a pedestrian. When a nearby pedestrian is detected directly in front of the vehicle, the pedestrian ahead indicator will display amber.

Front Pedestrian Alert

With Head-Up Display

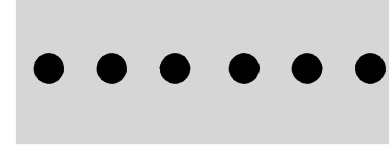

Without Head-Up Display

When the vehicle approaches a pedestrian ahead too rapidly, the red FPB alert display will flash on the windshield. Eight rapid high-pitched beeps will sound from the front, or both sides of the Safety

Alert Seat will pulse five times. When this Pedestrian Alert occurs, the brake system may prepare for driver braking to occur more rapidly which can cause a brief, mild deceleration. Continue to apply the brake pedal as needed. Cruise control may be disengaged when the Front Pedestrian Alert occurs.

Automatic Braking

If FPB detects it is about to crash into a pedestrian directly ahead, and the brakes have not been applied, FPB may automatically brake moderately or brake hard. This can help to avoid some very low speed pedestrian crashes or reduce pedestrian injury. FPB can automatically brake to detected pedestrians between 8 km/h (5 mph) and 80 km/h (50 mph). Automatic braking levels may be reduced under certain conditions, such as higher speeds.

If this happens, Automatic Braking may engage the Electric Parking Brake (EPB) to hold the vehicle at a stop. Release the EPB. A firm press of the accelerator pedal will also release Automatic Braking and the EPB.

⚠ Warning

FPB may alert or automatically brake the vehicle suddenly in situations where it is unexpected and undesired. It could falsely alert or brake for objects similar in shape or size to pedestrians, including shadows. This is normal operation and the vehicle does not need service. To override Automatic Braking, firmly press the accelerator pedal, if it is safe to do so.

Automatic Braking can be disabled through vehicle personalization. See “Front Pedestrian Detection” in “Collision/Detection Systems” under *Vehicle Personalization* ⇨ *170*.

⚠ Warning

Using the Front Pedestrian Braking system while towing a trailer could cause you to lose control of the vehicle and crash. Turn the system to Alert or Off when towing a trailer.

Cleaning the System

If FPB does not seem to operate properly, cleaning the outside of the windshield in front of the rearview mirror may correct the issue.

Side Blind Zone Alert (SBZA)

If equipped, the SBZA system is a lane-changing aid that assists drivers with avoiding crashes that occur with moving vehicles in the side blind zone (or spot) areas. When the vehicle is in a forward gear, the left or right side mirror display will light up if a moving vehicle is detected in that blind zone. If the turn signal is activated

and a vehicle is also detected on the same side, the display will flash as an extra warning not to change lanes. Since this system is part of the Lane Change Alert (LCA) system, read the entire LCA section before using this feature.

Lane Change Alert (LCA)

If equipped, the LCA system is a lane-changing aid that assists drivers with avoiding lane change crashes that occur with moving vehicles in the side blind zone (or spot) areas or with vehicles rapidly approaching these areas from behind. The LCA warning display will light up in the corresponding outside side mirror and will flash if the turn signal is on.

⚠ Warning

LCA does not alert the driver to vehicles outside of the system detection zones, pedestrians, bicyclists, or animals. It may not

(Continued)

Warning (Continued)

provide alerts when changing lanes under all driving conditions. Failure to use proper care when changing lanes may result in injury, death, or vehicle damage. Before making a lane change, always check mirrors, glance over your shoulder, and use the turn signals.

LCA Detection Zones

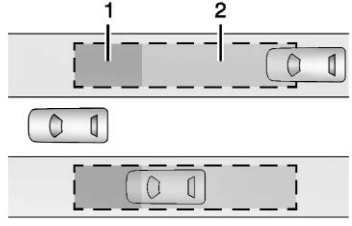

1. SBZA Detection Zone
2. LCA Detection Zone

The LCA sensor covers a zone of approximately one lane over from both sides of the vehicle, or 3.5 m (11 ft). The height of the zone is approximately between 0.5 m (1.5 ft) and 2 m (6 ft) off the ground. The Side Blind Zone Alert (SBZA) warning area starts at approximately the middle of the vehicle and goes back 5 m (16 ft). Drivers are also warned of vehicles rapidly approaching from up to 25 m (82 ft) behind the vehicle.

How the System Works

The LCA symbol lights up in the side mirrors when the system detects a moving vehicle in the next lane over that is in the side blind zone or rapidly approaching that zone from behind. A lit LCA symbol indicates it may be unsafe to change lanes. Before making a lane change, check the LCA display, check mirrors, glance over your shoulder, and use the turn signals.

Left Side Mirror Display

Right Side Mirror Display

When the vehicle is started, both outside mirror LCA displays will briefly come on to indicate the system is operating. When the vehicle is in a forward gear, the left or right side mirror display will light up if a moving vehicle is detected in the next lane over in that blind zone or rapidly approaching that zone. If the turn signal is activated in the same direction as a detected vehicle, this display will flash as an extra warning not to change lanes.

LCA is disabled when the trailer connection status is displayed. A DIC message may display. The SBZA system still operates.

LCA can be disabled through vehicle personalization. When you disable LCA, SBZA is also disabled. See *Vehicle Personalization* ⇨ *170*. If LCA is disabled by the driver, the LCA mirror displays will not light up.

When the System Does Not Seem to Work Properly

The LCA system requires some driving for the system to calibrate to maximum performance. This calibration may occur more quickly if the vehicle is driving on a straight highway road with traffic and roadside objects (e.g., guardrails, barriers).

LCA displays may not come on when passing a vehicle quickly, for a stopped vehicle, or when towing a trailer. The LCA detection zones that extend back from the side of the vehicle do not move further back when a trailer is towed. Use caution while changing lanes when towing a trailer. LCA may alert to objects attached to the vehicle, such as a trailer, bicycle, or object extending out to either side of the vehicle. Attached objects may also interfere with the detection of vehicles. This is normal system operation; the vehicle does not need service.

LCA may not always alert the driver to vehicles in the next lane over, especially in wet conditions or when driving on sharp curves. The system does not need to be serviced. The system may light up due to guardrails, signs, trees, shrubs, and other non-moving objects. This is normal system operation; the vehicle does not need service.

LCA may not operate when the LCA sensors in the left or right corners of the rear bumper are covered with mud, dirt, snow, ice, or slush, or in heavy rainstorms. For cleaning instructions, see "Washing the Vehicle" under *Exterior Care* ⇨ *407*. If the DIC still displays the system unavailable message after cleaning both sides of the vehicle toward the rear corners of the vehicle, see your dealer.

If the LCA displays do not light up when moving vehicles are in the side blind zone or are rapidly approaching this zone and the

system is clean, the system may need service. Take the vehicle to your dealer.

Radio Frequency Information

See *Radio Frequency Statement* ⇨ *447*.

Lane Departure Warning (LDW)

If equipped, LDW may help avoid crashes due to unintentional lane departures. It may provide a warning if the vehicle is crossing a detected lane marking without using a turn signal in the lane departure direction. Since this system is part of the Lane Keep Assist (LKA) system, read the entire LKA section before using this feature.

Lane Keep Assist (LKA)

If equipped, LKA may help avoid crashes due to unintentional lane departures. It may assist by gently turning the steering wheel if the vehicle approaches a detected lane marking without using a turn signal in that direction. It may also provide a Lane Departure Warning (LDW) system alert as the lane marking is crossed. The LKA system will not assist or provide an LDW alert if it detects that you are actively steering. Override LKA by turning the steering wheel. LKA uses a camera to detect lane markings between 60 km/h (37 mph) and 180 km/h (112 mph).

⚠ Warning

The LKA system does not continuously steer the vehicle. It may not keep the vehicle in the lane or give a Lane Departure Warning (LDW) alert, even if a lane marking is detected.

The LKA and LDW systems may not:

- Provide an alert or enough steering assist to avoid a lane departure or crash.

(Continued)

Warning (Continued)

- Detect lane markings under poor weather or visibility conditions. This can occur if the windshield or headlamps are blocked by dirt, snow, or ice, if they are not in proper condition, or if the sun shines directly into the camera.
- Detect road edges.
- Detect lanes on winding or hilly roads.

If LKA only detects lane markings on one side of the road, it will only assist or provide an LDW alert when approaching the lane on the side where it has detected a lane marking. Even with LKA and LDW, you must steer the vehicle. Always keep your attention on the road and maintain proper vehicle position within the lane, or vehicle damage, injury, or death could

(Continued)

Warning (Continued)

occur. Always keep the windshield, headlamps, and camera sensors clean and in good repair. Do not use LKA in bad weather conditions.

⚠ Warning

Using LKA while towing a trailer or on slippery roads could cause loss of control of the vehicle and a crash. Turn the system off.

How the System Works

The LKA camera sensor is on the windshield ahead of the rearview mirror.

To turn LKA on and off, press on the center stack.

When on, is green if LKA is available to assist and provide LDW alerts. It may assist by gently turning the steering wheel and display as amber if the vehicle approaches a detected lane marking without using a turn signal in that direction. It may also provide an LDW alert by flashing amber as the lane marking is crossed. Additionally, there may be three beeps, or the driver seat may pulse three times, on the right or left, depending on the lane departure direction.

Take Steering

The LKA system does not continuously steer the vehicle. If LKA does not detect active driver steering, an alert, chime, or DIC message may be provided. Move the steering wheel to dismiss.

When the System Does Not Seem to Work Properly

The system performance may be affected by:

- Close vehicles ahead.
- Sudden lighting changes, such as when driving through tunnels.
- Banked roads.
- Roads with poor lane markings, such as two-lane roads.

If the LKA system is not functioning properly when lane markings are clearly visible, cleaning the windshield may help.

A camera blocked message may display if the camera is blocked. Cleaning the outside of the windshield behind the rearview mirror may correct the issue. Some driver assistance systems may have reduced performance or not work at all. An LKA or LDW unavailable message may display if the systems are temporarily unavailable. This message could be due to a blocked camera. The LKA system does not need service. Clean the outside of the windshield behind the rearview mirror.

LKA assistance and/or LDW alerts may occur due to tar marks, shadows, cracks in the road, temporary or construction lane markings, or other road imperfections. This is normal system operation; the vehicle does not need service. Turn LKA off if these conditions continue.

Fuel

Top Tier Fuel

GM recommends the use of TOP TIER Detergent Gasoline to keep the engine clean, reduce engine deposits, and maintain optimal vehicle performance. Look for the TOP TIER Logo or see www.toptiergas.com for a list of TOP TIER Detergent Gasoline marketers and applicable countries.

TOP TIER
Detergent Gasoline

CATEGORIE SUPERIEURE
Essences Détergentes

Recommended Fuel (Except 6.2L V8 Engine)

For diesel engine vehicles, see “Fuel for Diesel Engines” in the Duramax diesel supplement.

If the vehicle has a yellow fuel cap or a yellow sticker on the fuel door, E85 or FlexFuel can be used. If the vehicle does not have a yellow fuel cap or yellow sticker, do not use gasoline with ethanol levels greater than 15% by volume. See *E85 or FlexFuel* ⇨ *276*.

Use regular unleaded gasoline meeting ASTM specification D4814 with a posted octane rating of 87 or higher. Do not use gasoline with a posted octane rating of less than 87, as this may cause engine knock and will lower fuel economy.

Recommended Fuel (6.2L V8 Engine)

Do not use any fuel labeled E85 or FlexFuel. Do not use gasoline with ethanol levels greater than 15% by volume.

Premium unleaded gasoline meeting ASTM specification D4814 with a posted octane rating of 93 is highly recommended for best performance and fuel economy. Unleaded gasoline with an octane rated as low as 87 can be used. Using unleaded gasoline rated below 93 octane, however, will lead to reduced acceleration and fuel economy. If knocking occurs, use a gasoline rated at 93 octane as soon as possible, otherwise, the engine could be damaged. If heavy knocking is heard when using gasoline with a 93 octane rating, the engine needs service.

Prohibited Fuels

Caution

Do not use fuels with any of the following conditions; doing so may damage the vehicle and void its warranty:

(Continued)

Caution (Continued)

- For vehicles that are not FlexFuel, fuel labeled greater than 15% ethanol by volume, such as mid-level ethanol blends (16–50% ethanol), E85, or FlexFuel.
- Fuel with any amount of methanol, methylal, ferrocene, and aniline. These fuels can corrode metal fuel system parts or damage plastic and rubber parts.
- Fuel containing metals such as methylcyclopentadienyl manganese tricarbonyl (MMT), which can damage the emissions control system and spark plugs.
- Fuel with a posted octane rating of less than the recommended fuel. Using this fuel will lower fuel economy and performance, and may decrease the life of the emissions catalyst.

Fuels in Foreign Countries

The U.S., Canada, and Mexico post fuel octane ratings in anti-knock index (AKI). For fuel not to use in a foreign country, see *Prohibited Fuels* ⇨ *276*.

Fuel Additives

TOP TIER Detergent Gasoline is highly recommended for use with your vehicle. If your country does not have TOP TIER Detergent Gasoline, add ACDelco Fuel System Treatment Plus−Gasoline to the vehicle's gasoline fuel tank at every oil change or 15 000 km (9,000 mi), whichever occurs first. TOP TIER Detergent Gasoline and ACDelco Fuel System Treatment Plus−Gasoline will help keep your vehicle's engine fuel deposit free and performing optimally.

E85 or FlexFuel

Vehicles with a yellow fuel sticker on the fuel door can use either unleaded gasoline or fuel containing

up to 85% ethanol (E85). All other vehicles should use only the unleaded gasoline as described in *Recommended Fuel (Except 6.2L V8 Engine)* ⇨ *275* or *Recommended Fuel (6.2L V8 Engine)* ⇨ *275*.

The use of E85 or FlexFuel is encouraged when the vehicle is designed to use it. E85 or FlexFuel is made from renewable sources.

To help locate fuel stations that carry E85 or FlexFuel, the U.S. Department of Energy has an alternative fuel website. See www.afdc.energy.gov/afdc/locator/stations.

E85 or FlexFuel should meet ASTM Specification D 5798 or CAN/CGSB–3.512 in Canada. Do not use the fuel if the ethanol content is greater than 85%. Fuel mixtures that do not meet ASTM or CGSB specifications can affect driveability and could cause the malfunction indicator lamp to come on.

The starting characteristics of E85 or FlexFuel make it unsuitable for use when temperatures fall below −18 °C (0 °F). Use gasoline or add gasoline to the E85 or FlexFuel.

Because E85 or FlexFuel has less energy per liter (gallon) than gasoline, the vehicle will need to be refilled more often. See *Filling the Tank* ⇨ *277*.

The only GM approved aftermarket additive is ACDelco Fuel System Treatment Plus-FlexFuel. Follow the instructions on the bottle for proper use. This product is available at your GM dealer.

Caution

Some additives are not compatible with E85 or FlexFuel and can harm the vehicle's fuel system. Use only additives approved by GM for E85 or FlexFuel vehicles. Damage caused by unapproved additives would not be covered by the vehicle warranty.

Caution

Do not use fuel containing methanol. It can corrode metal parts in the fuel system and also damage plastic and rubber parts. That damage would not be covered under the vehicle warranty.

Filling the Tank

If the vehicle has a diesel engine, see the Duramax diesel supplement for more information.

⚠ Warning

Fuel vapors and fuel fires burn violently and can cause injury or death.

Follow these guidelines:

- To help avoid injuries to you and others, read and follow all the instructions on the fuel pump island.

(Continued)

Warning (Continued)

- Turn off the engine when refueling.
- Keep sparks, flames, and smoking materials away from fuel.
- Do not leave the fuel pump unattended.
- Avoid using electronic devices while refueling.
- Do not reenter the vehicle while pumping fuel.
- Keep children away from the fuel pump and never let children pump fuel.
- Fuel can spray out if the refueling nozzle is inserted too quickly. This spray can happen if the tank is nearly full, and is more likely in hot weather. Insert the refueling nozzle slowly and wait for any hiss noise to stop prior to beginning to flow fuel.

The fuel door is on the driver side of the vehicle. The vehicle has a capless refueling system and does not have a fuel cap. The filling nozzle must be fully inserted and latched prior to starting fuel flow.

⚠ Warning

Overfilling the fuel tank by more than three clicks of a standard fill nozzle may cause:

- Vehicle performance issues, including engine stalling and damage to the fuel system.

(Continued)

Warning (Continued)

- Fuel spills.
- Potential fuel fires.

Be careful not to spill fuel. Wait a few seconds after you have finished pumping before removing the nozzle. Clean fuel from painted surfaces as soon as possible. See *Exterior Care* ⇨ *407*.

⚠ Warning

If a fire starts while you are refueling, do not remove the nozzle. Shut off the flow of fuel by shutting off the pump or by notifying the station attendant. Leave the area immediately.

Filling the Tank With a Portable Gas Can

If the vehicle runs out of fuel and must be filled from a portable gas can:

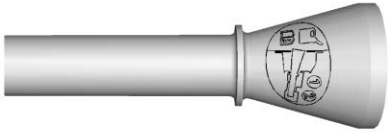

1. Locate the capless funnel adapter from inside the vehicle.
2. Insert and latch the funnel into the capless fuel system.

⚠ Warning

Attempting to refuel without using the funnel adapter may cause fuel spillage and damage the capless fuel system. This could cause a fire and you or others could be badly burned and the vehicle could be damaged.

3. Remove and clean the funnel adapter and return to the storage location.

Filling a Portable Fuel Container

⚠ Warning

Never fill a portable fuel container while it is in the vehicle. Static electricity discharge from the container can ignite the fuel vapor. You can be badly burned and the vehicle damaged if this occurs. To help avoid injury to you and others:

- Dispense fuel only into approved containers.
- Do not fill a container while it is inside a vehicle, in a vehicle's trunk, pickup bed, or on any surface other than the ground.
- Bring the fill nozzle in contact with the inside of the fill opening before operating the nozzle.

(Continued)

Warning (Continued)

Contact should be maintained until the filling is complete.

- Do not smoke while pumping fuel.
- Avoid using electronic devices.

Trailer Towing

General Towing Information

Only use towing equipment that has been designed for the vehicle. Contact your dealer or trailering dealer for assistance with preparing the vehicle to tow a trailer. Read the entire section before towing a trailer.

To tow a disabled vehicle, see *Towing the Vehicle* ⇨ *402*. To tow the vehicle behind another vehicle such as a motor home, see *Recreational Vehicle Towing* ⇨ *403*.

Driving Characteristics and Towing Tips

⚠ Warning

You can lose control when towing a trailer if the correct equipment is not used or the vehicle is not driven properly. For example, if the trailer is too heavy or the

(Continued)

Warning (Continued)

trailer brakes are inadequate for the load, the vehicle may not stop as expected. You and others could be seriously injured. The vehicle may also be damaged, and the repairs would not be covered by the vehicle warranty. Pull a trailer only if all the steps in this section have been followed. Ask your dealer for advice and information about towing a trailer with the vehicle.

Driving with a Trailer

Trailering is different than just driving the vehicle by itself. Trailering means changes in handling, acceleration, braking, durability, and fuel economy. Successful, safe trailering takes correct equipment, and it has to be used properly.

The following information has many time-tested, important trailering tips and safety rules. Many of these are important for your safety and that of your passengers. Read this section carefully before pulling a trailer.

When towing a trailer:

- Become familiar with and follow all state and local laws that apply to trailer towing. These requirements vary from state to state.
- State laws may require the use of extended side view mirrors. Even if not required, you should install extended side view mirrors if your visibility is limited or restricted while towing.
- Do not tow a trailer during the first 800 km (500 mi) of vehicle use to prevent damage to the engine, axle, or other parts.
- It is recommended to perform the first oil change before heavy towing.
- During the first 800 km (500 mi) of trailer towing, do not drive over 80 km/h (50 mph) and do not make starts at full throttle.

- Vehicles can tow in D (Drive). Tow/Haul Mode is recommended for heavier trailers. See *Tow/Haul Mode* ⇨ *237*. If the transmission downshifts too often, a lower gear may be selected using Manual Mode. See *Manual Mode* ⇨ *234*.

If equipped, the following driver assistance features should be turned off when towing a trailer:

- Cruise Control
- Lane Keep Assist (LKA)
- Park Assist
- Reverse Automatic Braking (RAB)

If equipped, the following driver assistance features should be turned to alert or off when towing a trailer:

- Forward Automatic Braking (FAB)
- Intelligent Brake Assist (IBA)
- Front Pedestrian Braking (FPB)

If equipped with Lane Change Alert (LCA), the LCA detection zones that extend back from the side of the vehicle do not move further back when a trailer is towed. Use caution while changing lanes when towing a trailer.

If equipped with Rear Cross Traffic Alert (RCTA), use caution while backing up when towing a trailer, as the RCTA detection zones that extend out from the back of the vehicle do not move further back when a trailer is towed.

⚠ Warning

To prevent serious injury or death from carbon monoxide (CO), when towing a trailer:

- Do not drive with the liftgate, trunk/hatch, or rear-most window open.
- Fully open the air outlets on or under the instrument panel.

(Continued)

Warning (Continued)

- Adjust the climate control system to a setting that brings in only outside air. See “Climate Control Systems” in the Index.

For more information about carbon monoxide, see *Engine Exhaust* ⇨ *230*.

Towing a trailer requires experience. The combination of the vehicle and trailer is longer and not as responsive as the vehicle itself. Get used to the handling and braking of the combination by driving on a level road surface before driving on public roads.

The trailer structure, the tires, and the brakes must all be rated to carry the intended cargo. Inadequate trailer equipment can cause the combination to operate in an unexpected or unsafe manner. Before driving, inspect all trailer hitch parts and attachments, safety chains, electrical connectors, lamps,

tires, and mirrors. See *Towing Equipment* ⇨ *289*. If the trailer has electric brakes, start the combination moving and then manually apply the trailer brake controller to check the trailer brakes work. During the trip, occasionally check that the cargo and trailer are secure and that the lamps and any trailer brakes are working.

Towing with a Stability Control System

When towing, the stability control system might be heard. The system reacts to vehicle movement caused by the trailer, which mainly occurs during cornering. This is normal when towing heavier trailers.

Following Distance

Stay at least twice as far behind the vehicle ahead as you would when driving without a trailer. This can help to avoid heavy braking and sudden turns.

Passing

More passing distance is needed when towing a trailer. The combination of the vehicle and trailer will not accelerate as quickly and is much longer than the vehicle alone. It is necessary to go much farther beyond the passed vehicle before returning to the lane. Pass on level roadways. Avoid passing on hills if possible.

Backing Up

Hold the bottom of the steering wheel with one hand. To move the trailer to the left, move that hand to the left. To move the trailer to the right, move that hand to the right. Always back up slowly and, if possible, have someone guide you.

Making Turns

Caution

Turn more slowly and make wider arcs when towing a trailer to prevent damage to your vehicle. Making very sharp turns could cause the trailer to contact the vehicle.

Make wider turns than normal when towing, so trailer will not go over soft shoulders, over curbs, or strike road signs, trees, or other objects. Always signal turns well in advance. Do not steer or brake suddenly.

Driving on Grades

Reduce speed and shift to a lower gear before starting down a long or steep downhill grade. If the transmission is not shifted down, the brakes may overheat and result in reduced braking efficiency.

The vehicle can tow in D (Drive). Shift the transmission to a lower gear if the transmission shifts too often under heavy loads and/or hilly conditions.

When towing at higher altitudes, engine coolant will boil at a lower temperature than at lower altitudes. If the engine is turned off immediately after towing at high altitude on steep uphill grades, the vehicle could show signs similar to engine overheating. To avoid this, let the engine run, preferably on level ground, with the transmission in P (Park) for a few minutes before turning the engine off. If the overheat warning comes on, see *Engine Overheating* ⇨ *335*.

Viewing Systems

If equipped, the viewing systems on the vehicle can improve visibility while hitching, backing, and driving with a trailer. See *Driver Assistance Systems* ⇨ *257*.

Parking on Hills

⚠ Warning

To prevent serious injury or death, always park your vehicle and trailer on a level surface when possible.

When parking your vehicle and your trailer on a hill:

1. Press the brake pedal, but do not shift into P (Park) yet. Turn the wheels into the curb if facing downhill or into traffic if facing uphill.
2. Have someone place chocks under the trailer wheels.
3. When the wheel chocks are in place, gradually release the brake pedal to allow the chocks to absorb the load of the trailer.
4. Reapply the brake pedal. Then apply the parking brake and shift into P (Park).
5. Release the brake pedal.

Leaving After Parking on a Hill

1. Apply and hold the brake pedal.
   - Start the engine.
   - Shift into a gear.
   - Release the parking brake.
2. Let up on the brake pedal.
3. Drive slowly until the trailer is clear of the chocks.
4. Stop and have someone pick up and store the chocks.

Launching and Retrieving a Boat

Backing the Trailer into the Water

⚠ Warning

- Have all passengers get out of the vehicle before backing onto the sloped part of the ramp. Lower the driver and passenger side windows before backing onto the ramp. This will

(Continued)

Warning (Continued)

provide a means of escape in the unlikely event the vehicle slides into the water.

- If the boat launch surface is slippery, have the driver remain in the vehicle with the brake pedal applied while the boat is being launched. The boat launch can be especially slippery at low tide when part of the ramp was previously submerged at high tide. Do not back onto the ramp to launch the boat if you are not sure the vehicle can maintain traction.
- Do not move the vehicle if someone is in the path of the trailer. Some parts of the trailer might be underwater and not visible to people who are assisting in launching the boat.

Disconnect the wiring to the trailer before backing the trailer into the water to prevent damage to the electrical circuits on the trailer. Reconnect the wiring to the trailer after removing the trailer from the water. If the trailer has electric brakes that can function when the trailer is submerged, it might help to leave the electrical trailer connector attached to maintain trailer brake functionality while on the boat ramp.

To back the trailer into the water:

1. If equipped, place the vehicle in four-wheel-drive high.
2. Slowly back down the boat ramp until the boat is floating, but no further than necessary.
3. Press and hold the brake pedal, but do not shift into P (Park) yet.
4. Have someone place chocks under the front wheels of the vehicle.
5. Gradually release the brake pedal to allow the chocks to absorb the load of the trailer.
6. Reapply the brake pedal. Then apply the parking brake and shift into P (Park).
7. Release the brake pedal.

Pulling the Trailer from the Water

To pull the trailer out of the water:

1. Press and hold the brake pedal and apply the Electric Parking Brake.
2. Start the engine and shift into gear.
3. Release the parking brake.
4. Let up on the brake pedal.
5. Drive slowly until the tires are clear of the chocks.
6. Stop and have someone pick up and store the chocks.
7. Slowly pull the trailer from the water.
8. Once the vehicle and trailer have been driven from the sloped part of the boat ramp, the vehicle can be shifted from four-wheel-drive high. Shift into

the drive mode that is appropriate for the road conditions.

Caution

If the vehicle tires begin to spin and the vehicle begins to slide toward the water, remove your foot from the accelerator pedal and apply the brake pedal. Seek help to have the vehicle towed up the ramp.

Maintenance when Trailer Towing

The vehicle needs service more often when used to tow trailers. See *Maintenance Schedule* ⇨ *419*. It is especially important to check the engine oil, axle lubricant, belts, cooling system, and brake system before and during each trip.

Check periodically to see that all nuts and bolts on the trailer hitch are tight.

Engine Cooling When Trailer Towing

The cooling system may temporarily overheat during severe operating conditions. See *Engine Overheating* ⇨ *335*.

Trailer Towing

If equipped with a diesel engine, see the Duramax diesel supplement.

Caution

Towing a trailer improperly can damage the vehicle and result in costly repairs not covered by the vehicle warranty. To tow a trailer correctly, follow the directions in this section and see your dealer for important information about towing a trailer with the vehicle.

Trailering is different than just driving the vehicle by itself. Trailering means changes in handling, acceleration, braking, durability, and fuel economy.

Successful, safe trailering takes correct equipment, and it has to be used properly.

The following information has many time-tested, important trailering tips and safety rules. Many of these are important for your safety and that of your passengers. Read this section carefully before pulling a trailer.

Trailer Weight

⚠ Warning

Never exceed the towing capacity for your vehicle.

Safe trailering requires monitoring the weight, speed, altitude, road grades, outside temperature, and how frequently the vehicle is used to tow a trailer.

Trailer Weight Ratings

When towing a trailer, the combined weight of the vehicle, vehicle contents, trailer, and trailer contents

must be below all of the maximum weight ratings for the vehicle, including:

- GCWR: Gross Combined Weight Rating
- GVWR: Gross Vehicle Weight Rating
- Maximum Trailer Weight Rating
- GAWR-RR: Gross Axle Weight Rating-Rear
- Maximum Trailer Tongue Weight Rating

See “Weight-Distributing Hitch Adjustment” under *Towing Equipment* ⇨ *289* to determine if equalizer bars are required to obtain the maximum trailer weight rating.

See “Trailer Brakes” under *Towing Equipment* ⇨ *289* to determine if brakes are required based on your trailer's weight.

The only way to be sure the weight is not exceeding any of these ratings is to weigh the tow vehicle and trailer combination, fully loaded for the trip, getting individual weights for each of these items.

A trailering information label on the driver's side door B-pillar shows tow rating information for the vehicle.

⚠ Warning

You and others could be seriously injured or killed if the trailer is too heavy or the trailer brakes are inadequate for the load. The vehicle may be damaged, and the repairs would not be covered by the vehicle warranty.

Only tow a trailer if all the steps in this section have been followed. Ask your dealer for advice and information about towing a trailer.

Gross Combined Weight Rating (GCWR)

GCWR is the total allowable weight of the completely loaded vehicle and trailer including any fuel, passengers, cargo, equipment, and accessories. Do not exceed the GCWR for your vehicle. The GCWR for the vehicle is on the Trailering Information Label.

To check that the weight of the vehicle and trailer are within the GCWR for the vehicle, follow these steps:

1. Start with the "curb weight" from the Trailering Information Label.
2. Add the weight of the trailer loaded with cargo and ready for the trip.
3. Add the weight of all passengers.
4. Add the weight of all cargo in the vehicle.
5. Add the weight of hitch hardware such as a draw bar, ball, load equalizer bars, or sway bars.
6. Add the weight of any accessories or aftermarket equipment added to the vehicle.

The resulting weight cannot exceed the GCWR value shown on the Trailering Information Label.

The gross combined weight can also be confirmed by weighing the truck and trailer on a public scale. The truck and trailer should be loaded for the trip with passengers and cargo.

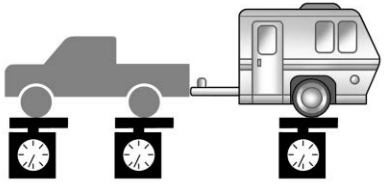

Gross Vehicle Weight Rating (GVWR)

For information about the vehicle's maximum load capacity, see *Vehicle Load Limits* ⇨ *211*. When calculating the GVWR with a trailer attached, the trailer tongue weight must be included as part of the weight the vehicle is carrying.

Maximum Trailer Weight

The maximum trailer weight rating is calculated assuming the tow vehicle has a driver, a front seat passenger, and all required trailering equipment. This value represents the heaviest trailer the vehicle can tow, but it may be necessary to reduce the trailer weight to stay within the GCWR, GVWR, maximum trailer tongue load, or GAWR-RR for the vehicle.

Use the Tow Rating Guide (my.gmc.com/learn) to determine how much the trailer can weigh, based on the vehicle model and options.

Weights listed apply for conventional trailers unless otherwise noted.

The weight of the trailer, including the trailer and all cargo in the trailer, cannot exceed the maximum trailer weight rating for the vehicle. The allowable trailer weight might be reduced by the weight of the vehicle options, accessories, passengers, or cargo in the tow vehicle. To determine the maximum trailer weight rating:

1. Find the Gross Combined Weight Rating for the vehicle as shown on the Trailering Information Label.
2. Subtract the following:
   - Vehicle curb weight as shown on the Trailering Information Label
   - Weight of the driver and passengers
   - Weight of cargo in the tow vehicle
   - Hitch hardware weight including the draw bar, and equalizer bars
   - Weight of accessories added to the vehicle

A step bumper trailer hitch can only support a total trailer weight up to 2,271 kg (5,000 lb). If a trailer hitch ball is added to the step bumper, check the hitch ball rating to be sure it is higher than the total trailer weight.

Maximum Trailer Tongue Weight Rating

The Maximum Trailer Tongue Weight Rating is the allowable trailer tongue weight that the vehicle can support using a conventional trailer hitch. It may be necessary to reduce the overall trailer weight to stay within the maximum trailer tongue weight rating while still maintaining the correct trailer load balance.

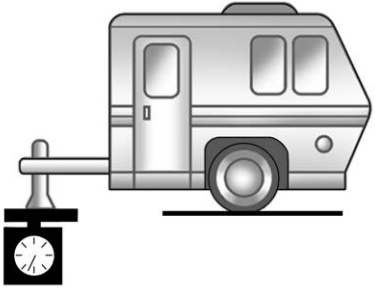

The Maximum Trailer Tongue Weight Rating for a conventional trailer hitch is shown on the Trailering Information Label.

Do not exceed a maximum trailer tongue weight of 567 kg (1,250 lb) for a conventional trailer hitch.

The trailer tongue weight contributes to the Gross Vehicle Weight (GVW). GVW includes the curb weight of your vehicle, any passengers, cargo, equipment, and the trailer tongue weight. Vehicle options, passengers, cargo, and equipment reduce the maximum allowable tongue weight the vehicle can carry, which also reduces the maximum allowable trailer weight.

Trailer Load Balance

The correct trailer load balance must be maintained to ensure trailer stability. Incorrect load balance is a leading cause of trailer sway.

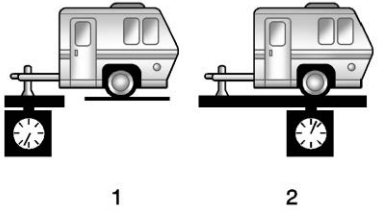

The trailer tongue weight (1) should be 10–15% of the total loaded trailer weight (2). Some specific trailer types, such as boat trailers, fall outside of this range. Always refer to the trailer owner's manual for the recommended trailer tongue weight for each trailer. Never exceed the maximum loads for the vehicle, hitch and trailer.

The trailer load balance percentage is calculated as: weight (1) divided by weight (2) times 100.

After loading the trailer, separately weigh the trailer and then the trailer tongue and calculate the trailer load balance percentage to see if the

weights and distribution are appropriate for your vehicle. If the trailer weight is too high, it may be possible to transfer some of the cargo into your vehicle. If the trailer tongue weight is too high or too low, it may be possible to rearrange some of the cargo inside of the trailer.

Do not exceed the maximum allowable tongue weight for the vehicle. Use the shortest hitch extension that will position the hitch ball closest to the vehicle. This will help reduce the effect of trailer tongue weight on the trailer hitch and rear axle.

If a cargo carrier is used in the trailer hitch receiver, choose a carrier that positions the load as close to the vehicle as possible. Make sure the total weight, including the carrier, is no more than half of the maximum allowable tongue weight for the vehicle or 227 kg (500 lb), whichever is less.

Rear Gross Axle Weight Rating (GAWR-RR)

The GAWR-RR is the total weight that can be supported by the rear axle of the vehicle. Do not exceed the GAWR-RR for the vehicle, with the tow vehicle and trailer fully loaded for the trip including the weight of the trailer tongue. If using a weight-distributing hitch, do not exceed the GAWR-RR before applying the weight distribution spring bars.

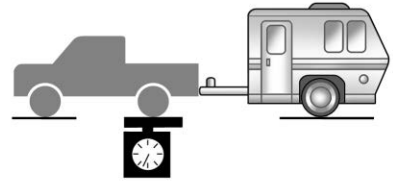

The GAWR-RR for the vehicle is on the Trailering Information Label.

Ask your dealer for trailering information or assistance.

Towing Equipment

Hitches

Always use the correct hitch equipment for your vehicle. Crosswinds, large trucks going by, and rough roads can affect the trailer and the hitch.

Proper hitch equipment for your vehicle helps maintain control of the vehicle-trailer combination. Many trailers can be towed using a weight-carrying hitch which has a coupler latched to the hitch ball, or a tow eye latched to a pintle hook. Other trailers may require a weight-distributing hitch that uses spring bars to distribute the trailer tongue weight between your vehicle and trailer axles. See “Maximum Trailer Tongue Weight” under *Trailer Towing* ⇨ *285* for weight limits with various hitch types.

Avoid sharp turns when using a step-bumper hitch to prevent damage. Make wider turns to prevent contact between your trailer and your bumper.

Consider using mechanical sway controls with any trailer. Ask a trailering professional about sway controls or refer to the trailer manufacturer's recommendations and instructions.

Weight-Distributing Hitch and Adjustment

A weight-distributing hitch may be useful with some trailers. Use the following guidelines to determine if a weight-distributing hitch should be used.

Vehicle Series	Trailer Weight	Weight-Distributing Hitch Usage	Hitch Distribution
1500	Up to 3 175 kg (7,000 lb)	Optional	Refer to trailer manufacturer's recommendation
1500	Over 3 175 kg (7,000 lb)	Required	50%

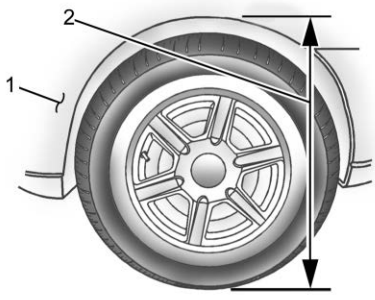

1. Front of Vehicle
2. Body to Ground Distance

When using a weight-distributing hitch, measure the front fender height above the front axle distance (2) before and after the connecting trailer. Adjust the spring bars until the front fender height distance (2) is approximately half way between the first and second measurements.

Tires

- Do not tow a trailer while using a compact spare tire on the vehicle.
- Tires must be properly inflated to support loads while towing a trailer. See *Tires* ⇨ *362* for instructions on proper tire inflation.

Safety Chains

Always attach safety chains between the vehicle and the trailer. Instructions about safety chains may be provided by the hitch manufacturer or by the trailer manufacturer.

If the trailer being towed weighs up to 2 271 kg (5,000 lb) with a factory-installed step bumper, safety

chains may be attached to the attaching points on the bumper; otherwise, safety chains should be attached to holes on the trailer hitch.

Cross the safety chains under the tongue of the trailer to help prevent the tongue from contacting the road if it becomes separated from the hitch. Always leave enough slack in the safety chains to allow the combination to turn. Never allow safety chains to drag on the ground.

Trailer Brakes

Loaded trailers over 900 kg (2,000 lb) must be equipped with brake systems and with brakes for each axle. Trailer braking equipment conforming to Canadian Standards Association (CSA) requirement CAN3-D313, or its equivalent, is recommended.

State or local regulations may require trailers to have their own braking system if the loaded weight of the trailer exceeds certain minimums that can vary from state to state. Read and follow the instructions for the trailer brakes so they are installed, adjusted, and maintained properly. Never attempt to tap into your vehicle's hydraulic brake system. If you do, both the vehicle antilock brakes and the trailer brakes may not function, which could result in a crash.

Trailer Wiring Harness

If the vehicle is not equipped with a trailer connector on the rear bumper, a 7-wire trailering harness is tied to the vehicles frame. The harness requires the installation of a trailer connector, which is available through your dealer.

If equipped, the trailer wiring harness, with a 7-pin connector and a 4-pin connector, is mounted on the vehicle's rear bumper.

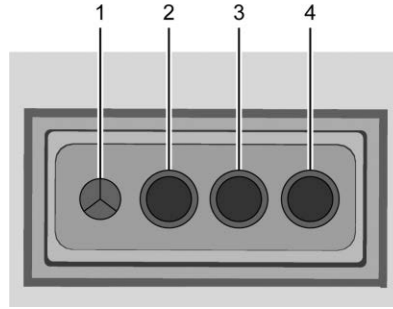

1. Ground
2. Taillamps
3. Left Turn/Brake
4. Right Turn/Brake

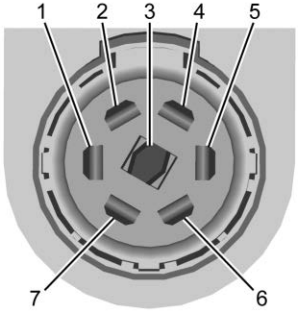

1. Left Turn/Brake
2. Taillamps
3. Reverse Lamps
4. Battery Feed
5. Right Turn/Brake
6. Electric Brakes
7. Ground

Use only a round, seven-wire connector with flat blade terminals meeting SAE J2863 specifications for proper electrical connectivity.

Electric Brake Control Wiring Provisions

If the vehicle is not equipped with an integrated trailer brake controller, and the trailer has electric brakes, a trailer brake controller needs to be installed on the vehicle. The brake controller should be installed by your dealer or a qualified service center.

If equipped, there is a trailer brake jumper harness provided with the vehicle. The connector on the trailer brake jumper harness is attached to a mating connector to the left of the steering wheel behind the knee bolster. The four blunt cut wires on the jumper harness need to be connected to an aftermarket electric trailer brake controller. The harness contains the following circuits:

Electric Trailer Brakes	Blue
Battery Feed	Red/Violet or Red/Black
Brake Apply Signal	White/Blue
Ground	Black

The fuse for the electric trailer brake circuit is in the engine compartment fuse block, but the wires may not be connected. They should be connected by your dealer or a qualified service center.

Refer to the aftermarket electric trailer brake controller owner's manual to determine wire color coding of the electric trailer brake controller. The wire colors on the brake controller may be different from the vehicle.

Trailer Lamps

Always check all trailer lamps are working at the beginning of each trip, and periodically on longer trips.

If equipped, the Trailering App will monitor the RH turn/brake lamp circuit, LH turn/brake lamp circuit, running lamp circuit, and reverse lamp circuits on the trailer. DIC messages and Trailering App alerts may be displayed if lighting circuit issues are detected on the trailer.

Pressing START LIGHT TEST in the Trailering App automatically activates trailer lamps. The Trailering App is not a substitute for manually inspecting your trailer lamps. See *Trailering App* ⇨ *300*.

Turn Signals When Towing a Trailer

When properly connected, the trailer turn signals will illuminate to indicate the vehicle is turning, changing lanes, or stopping. When towing a trailer, the arrows on the instrument cluster will illuminate even if the trailer is not properly connected or the bulbs are burned out.

Tow/Haul Mode

For instructions on how to enter Tow/Haul Mode, see *Driver Mode Control* ⇨ *249*.

Tow/Haul assists when pulling a heavy trailer or a large or heavy load. See *Tow/Haul Mode* ⇨ *237*.

Tow/Haul Mode is designed to be most effective when the vehicle and trailer combined weight is at least 75% of the vehicle's Gross Combined Weight Rating (GCWR). See “Weight of the Trailer” under *Trailer Towing* ⇨ *285*.

Tow/Haul Mode is most useful when towing a heavy trailer or carrying a large or heavy load:

- through rolling terrain.
- in stop-and-go traffic.
- in busy parking lots.

Operating the vehicle in Tow/Haul Mode when lightly loaded or not towing will not cause damage; however, it is not recommended and may result in unpleasant engine and transmission driving characteristics and reduced fuel economy.

Integrated Trailer Brake Control System

The vehicle may have an Integrated Trailer Brake Control (ITBC) system for use with electric trailer brakes or most electric over hydraulic trailer brake systems. These instructions apply to both types of electric trailer brakes.

This symbol is on the Trailer Brake Control Panel on vehicles with an ITBC system. The power output to the trailer brakes is proportional to the amount of vehicle braking. This available power output to the trailer brakes can be adjusted to a wide range of trailering situations.

The ITBC system is integrated with the vehicle’s brake, antilock brake, and StabiliTrak/Electronic Stability Control (ESC) systems. In trailering conditions that cause the vehicle’s antilock brake or StabiliTrak/ESC systems to activate, power sent to the trailer's brakes will be automatically adjusted to minimize trailer wheel lock-up. This does not imply that the trailer has StabiliTrak/ESC.

If the vehicle’s brake, anti-lock brake, or StabiliTrak/ESC systems are not functioning properly, the

ITBC system may not function fully or at all. Make sure all of these systems are fully operational to allow the ITBC system to function properly.

The ITBC system is powered through the vehicle's electrical system. Turning the ignition off will also turn off the ITBC system. The ITBC system is fully functional only when the ignition is in ON/RUN.

⚠ Warning

Connecting a trailer that has an air brake system may result in reduced or complete loss of trailer braking, including increased stopping distance or trailer instability which could result in serious injury, death, or property damage. Only use the ITBC system with electric or electric over hydraulic trailer brake systems.

Trailer Brake Control Panel

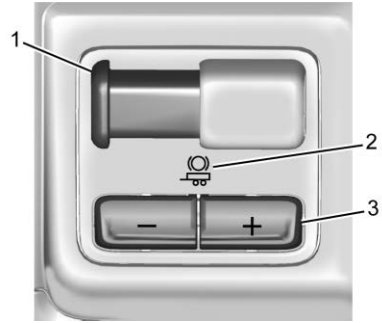

1. Manual Trailer Brake Apply Lever
2. Trailer Symbol
3. Trailer Gain Adjustment Buttons

The trailer symbol on the control panel will light amber when a trailer with electric brakes is connected.

The ITBC control panel is on the instrument panel to the right of the steering column. See *Instrument Panel* ⇨ *6*. The control panel allows adjustment to the amount of output, referred to as Trailer Gain, available to the trailer brakes and allows manual application of the trailer brakes. Use the ITBC control panel and the DIC trailer brake display page to adjust and display power output to the trailer brakes.

Trailer Brake DIC Display Page

The ITBC display page indicates:

- Trailer Gain setting
- Output to the trailer brakes
- Trailer connection
- System operational status

To display:

- Scroll through the DIC menu pages
- Press a Trailer Gain (+) or (−) button
- Activate the Manual Trailer Brake Apply Lever

TRAILER GAIN: Press a Trailer Gain button to recall the current Trailer Gain setting. Each press and release of the gain buttons will then change the Trailer Gain setting. Press the Trailer Gain (+) or (−) to

adjust. Press and hold to continuously adjust the Trailer Gain. To turn the output to the trailer off, adjust the Trailer Gain setting to 0.0. This setting can be adjusted from 0.0 to 10.0 with a trailer connected or disconnected.

TRAILER OUTPUT: This displays anytime a trailer with electric brakes is connected. Output to the trailer brakes is based on the amount of vehicle braking present and relative to the Trailer Gain setting. Output is displayed from 0 to 100% for each gain setting.

The Trailer Output will indicate "- - - - - -" on the Trailer Brake Display Page whenever the following occur:

- No trailer is connected.
- A trailer without electric brakes is connected, no DIC message displays.
- A trailer with electric brakes has become disconnected, a CHECK TRAILER WIRING message displays on the DIC.
- There is a fault present in the wiring to the trailer brakes, a CHECK TRAILER WIRING message displays on the DIC.
- The ITBC system is not working due to a fault, a SERVICE TRAILER BRAKE SYSTEM message displays in the DIC.

Manual Trailer Brake Apply Lever

Slide this lever right to apply the trailer's electric brakes independent of the vehicle's brakes. Use this lever to adjust Trailer Gain to achieve proper power output to the trailer brakes. The trailer's and the vehicle's brake lamps will come on when either vehicle brakes or manual trailer brakes are applied and properly connected.

Trailer Gain Adjustment Procedure

Trailer Gain should be set for a specific trailering condition and it must be readjusted anytime vehicle loading, trailer loading, or road surface conditions change.

⚠ Warning

Trailer brakes that are over-gained or under-gained may not stop the vehicle and the trailer as intended and can result in a crash. Always follow the instructions to set the Trailer Gain for the proper trailer stopping performance.

To adjust Trailer Gain for each towing condition:

1. Drive the vehicle with the trailer attached on a level road surface representative of the towing condition and free of traffic at about 32 - 40 km/h (20 - 25 mph) and fully apply the Manual Trailer Brake Apply Lever.

   Adjusting Trailer Gain at speeds lower than 32 to 40 km/h (20 to 25 mph) may result in an incorrect gain setting.

2. Adjust the Trailer Gain, using the Trailer Gain (+) or (-) adjustment buttons, to just below the point of trailer wheel lock-up, indicated by trailer wheel squeal or tire smoke when a trailer wheel locks.

   Trailer wheel lock-up may not occur if towing a heavily loaded trailer. Adjust the Trailer Gain to the highest allowable setting for the towing condition.

3. Readjust Trailer Gain anytime vehicle loading, trailer loading, or road surface conditions change or if trailer wheel lock-up is noticed at any time while towing.

Other ITBC-Related DIC Messages

TRAILER CONNECTED: This message will briefly display when a trailer with electric brakes is first connected to the vehicle. This message will automatically turn off in about 10 seconds. This message can be acknowledged before it automatically turns off.

CHECK TRAILER WIRING: This message will display if:

- The ITBC system first determines connection to a trailer with electric brakes and then the trailer harness becomes disconnected from the vehicle.

  If the disconnect occurs while the vehicle is stationary, this message will automatically turn off in about 30 seconds. This message will also turn off if it is acknowledged or if the trailer harness is reconnected.

  If the disconnect occurs while the vehicle is moving, this message will continue until the ignition is turned off. This message will also turn off if it is acknowledged or if the trailer harness is reconnected.

- There is an electrical fault in the wiring to the trailer brakes. This message will continue as long as there is an electrical fault in the trailer wiring. This message will also turn off if it is acknowledged.

To determine whether the electrical fault is on the vehicle side or trailer side of the trailer wiring harness connection:

1. Disconnect the trailer wiring harness from the vehicle.
2. Turn the ignition off.
3. Wait 10 seconds, then turn the ignition back to RUN.
4. If the CHECK TRAILER WIRING message reappears, the electrical fault is on the vehicle side.

If the CHECK TRAILER WIRING message only reappears when connecting the trailer wiring harness to the vehicle, the electrical fault is on the trailer side.

SERVICE TRAILER BRAKE SYSTEM: This message will display when there is a problem with the ITBC system. If this message continues over multiple ignition cycles, have the vehicle serviced.

If either the CHECK TRAILER WIRING or SERVICE TRAILER BRAKE SYSTEM message displays

while driving, the ITBC system may not be fully functional or may not function at all. When traffic conditions allow, carefully pull the vehicle over to the side of the road and turn the ignition off. Check the wiring connection to the trailer and turn the ignition back on. If either of these messages continues, either the vehicle or trailer needs service.

A GM dealer may be able to diagnose and repair problems with the trailer. However, any diagnosis and repair of the trailer is not covered under the vehicle warranty. Contact your trailer dealer for assistance with trailer repairs and trailer warranty information.

Trailer Sway Control (TSC)

Vehicles with StabiliTrak/Electronic Stability Control (ESC) have a Trailer Sway Control (TSC) feature. Trailer sway is unintended side-to-side motion of a trailer while towing. If the vehicle is towing a trailer and the TSC detects that sway is increasing, the vehicle brakes are selectively applied at each wheel, to help reduce excessive trailer sway. If equipped with the Integrated Trailer Brake Control (ITBC) system, and the trailer has an electric brake system, StabiliTrak/ESC may also apply the trailer brakes.

If TSC is enabled, the Traction Control System (TCS)/StabiliTrak/ESC warning light will flash on the instrument cluster. Reduce vehicle speed by gradually removing your foot from the accelerator. If trailer sway continues, StabiliTrak/ESC can reduce engine torque to help slow the vehicle. TSC will not function if StabiliTrak/ESC is turned off. See *Traction Control/Electronic Stability Control* ⇨ *246*.

⚠ Warning

Trailer sway can result in a crash and in serious injury or death, even if the vehicle is equipped with TSC.

If the trailer begins to sway, reduce vehicle speed by gradually removing your foot from the accelerator. Then pull over to check the trailer and vehicle to help correct possible causes, including an improperly or overloaded trailer, unrestrained cargo, improper trailer hitch configuration, or improperly inflated or incorrect vehicle or trailer tires. See *Towing Equipment* ⇨ *289* for trailer ratings and hitch setup recommendations.

Aftermarket Electronic Trailer Sway Control Devices

Some trailers may come equipped with an electronic device designed to reduce or control trailer sway.

Aftermarket equipment manufacturers also offer similar devices that connect to the wiring between the trailer and the vehicle. These devices may interfere with the vehicle's trailer brake or other systems, including integrated anti-sway systems, if equipped. Messages related to trailer connections or trailer brakes could appear on the DIC. The effects of these aftermarket devices may have on vehicle handling or trailer brake performance is not known.

⚠ Warning

Use of aftermarket electronic trailer sway control devices could result in reduced trailer brake performance, loss of trailer brakes, or other malfunctions, and result in a crash. You or others could be seriously injured or killed. Before using one of these devices:

(Continued)

Warning (Continued)

- Ask the device or trailer manufacturer if the device has been thoroughly tested for compatibility with the make, model, and year of your vehicle and any optional equipment installed on your vehicle.
- Before driving, check the trailer brakes are working properly, if equipped. Drive the vehicle with the trailer attached on a level road surface that is free of traffic at about 32-40 km/h (20-25 mph) and fully apply the manual trailer brake apply lever. Also, check the trailer brake lamps and other lamps are functioning correctly.
- If the trailer brakes are not operating properly at any time, or if a DIC message indicates problems with the

(Continued)

Warning (Continued)

trailer connections or trailer brakes, carefully pull the vehicle over to the side of the road when traffic conditions allow.

Trailer Tires

Special Trailer (ST) tires differ from vehicle tires. Trailer tires are designed with stiff sidewalls to help prevent sway and to support heavy loads. These features can make it difficult to determine if the trailer tire pressures are low only based on a visual inspection.

Always check all trailer tire pressures before each trip when the tires are cool. Low trailer tire pressure is a leading cause of trailer tire blow-outs.

If the vehicle is equipped with a trailer tire pressure monitoring system, see the trailer tire pressure monitoring system description and the trailering app.

Trailer tires deteriorate over time. The trailer tire sidewall will show the week and year the tire was manufactured. Many trailer tire manufacturers recommend replacing tires more than six years old.

Overloading is another leading cause of trailer tire blow-outs. Never load your trailer with more weight than the tires are designed to support. The load rating is located on the trailer tire sidewall.

Always know the maximum speed rating for the trailer tires before driving. This may be significantly lower than the vehicle tire speed rating. The speed rating may be on the trailer tire sidewall. If the speed rating is not shown, the default trailer tire speed rating is 105 km/h (65 mph).

Trailering App

Trailer Light App

If equipped, the Trailer Lights App is on the Home Page of the infotainment display.

Touch Start to cycle the trailer lights on and off to determine if they are working. The test follows this sequence:

1. The running lights turn on first and remain on throughout the sequence.
2. The brake lights turn on for about two seconds.
3. The left turn signal light flashes three times.
4. The right turn signal light flashes three times.
5. The reverse lights turn on for about two seconds.
6. Steps 2–5 repeat for approximately one minute and 45 seconds, or until the test deactivates.

Touch Stop to stop the test. The test will automatically end after one minute and 45 seconds.

The sequence also deactivates when any of the following occur:

- The ignition is turned off.
- The transmission is shifted out of P (Park).
- The brake pedal pressed.
- The turn signal is activated.
- The hazard warning lights activated.

Trailering App

If equipped, the Trailering App is on the Home Page of the infotainment display.

This feature allows profiles for connected trailers to be created to view status, and to store and track trailer usage information.

The Trailering App Preview will appear when the Trailering App is opened for the first time from the Home Page. Touch GET STARTED in the Trailering App to go into the app.

When a trailer is electrically connected, there will be an option to create a profile, use a guest profile, or cancel. After Cancel is selected a third time, Don’t Remind Me will display and touching that will turn off

the trailer detection pop-up. To turn the Trailer Detection Alert on, select ON in the Settings tab.

When a trailer is electrically connected and after a Trailer Profile has been created, the trailer detection pop-up will appear with a list of all of the custom Trailer Profiles made on the vehicle. To load an existing Trailer Profile, select one of the Trailer Profiles listed, or load the Guest Trailer Profile by selecting GUEST TRAILER. Touching Cancel, Accessory/No trailer, or shifting the vehicle from P (Park), will select Accessory/No trailer as the active Trailer Profile and will dismiss the pop- up.

Create a Trailer Profile

1. Touch Create Profile on the pop-up or touch + New Trailer in the Trailering App.
2. Create a name for the trailer.
3. Select the hitch type.
   A checklist profile will be created based on the type selected.
4. Select the trailer type.

A pop-up will indicate the setup is complete. Touch DONE to complete the process or touch ADVANCED SETUP to set up the Tow/Haul Mode reminder, Trailer Tire Pressure Monitoring System, if equipped, or maintenance reminders.

Advanced Setup

Tow/Haul Mode Reminder

To turn the Tow/Haul Mode Reminder setting on, touch Yes. To turn it off, touch No.

Trailer Tire Pressure Setup

If the Trailer Tire Pressure Monitoring System (TTPMS) is detected, touch Yes to set up the sensors or touch No to skip this step and go to the Maintenance Reminders step.

If the vehicle is not equipped with TTPMS, the app will advance directly to the Maintenance Reminders screen. Follow the on-screen instructions.

A trailer must be electrically connected to the vehicle before starting the sensor-to-vehicle learn process.

After selecting Start from the Learn Sensors screen, use the Tool Method or the Manual Method (described below) to learn each tire sensor, during which the current tire number will be highlighted.

Each sensor has a minimum of two minutes to learn, shown by a timer. After a sensor is learned, a checkmark appears next to the tire, the vehicle horn will sound, the vehicle's brake lamps will flash, and all working trailer lamps will flash. It then moves to the next sensor.

To cancel the process touch Stop.

The recommended tire pressure must be entered for the trailer tires. This allows the vehicle to alert when the tire pressure is high or low.

TTPMS must learn the location of the installed tire sensors to show correct air pressure and temperature for each tire. To set up, use one of the following options or

see a tire or trailer dealer for service. The learning process must be repeated when the trailer tires are rotated or replaced. See “Editing a Trailer Profile” later in this section for tire pressure sensor relearn information.

Tool Method: A TTPMS activation tool can be purchased separately to learn the sensor locations.

Manual Method: Without the tool, the air pressure can be increased or decreased in each tire for 10 seconds. Do not exceed the maximum inflation pressure found on the tire sidewalls. Make sure to re-adjust tire pressure to the recommended level when the process is complete.

Sensor Learning Steps

To complete the sensor-to-vehicle learn process:

1. Touch Start on the Learn Sensors screen. The horn chirps twice and the Learning Active screen appears on the infotainment display.
2. Start with the driver side front trailer tire.
3. Activate the tool near the valve stem or adjust the air pressure of this tire until the horn chirps and all working vehicle and trailer lights flash.

   The process stops without saving the sensor locations if this step takes more than two minutes.
4. Move to the next tire and repeat Step 3 for each sensor. The horn chirps twice when all sensors are completed.
5. Return to the vehicle to complete the setup.

Maintenance Reminders

Select Yes to set up the maintenance reminders for the Trailer Profile. Follow the on-screen prompts. The maximum number of reminders is 10. Select No to skip this step.

Status View

The Status view shows:

- Truck
- Connection
- Trailer
- Maintenance

Truck

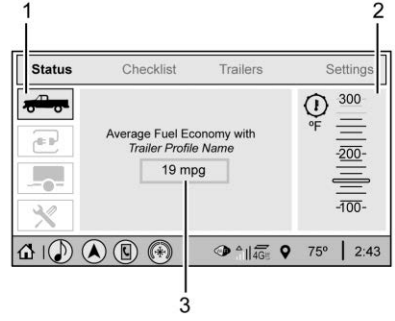

1. Truck Status Page
2. Transmission Temperature
3. Average Fuel Economy with Trailer Profile

Average Fuel Economy

Touch to view the average fuel economy of the vehicle while the Trailer Profile is active.

Transmission Temperature

Touch to view the temperature of the transmission fluid graphic. The graphic will indicate a dangerous level if the temperature is at 130 °C–150 °C (270 °F–300 °F).

Connections

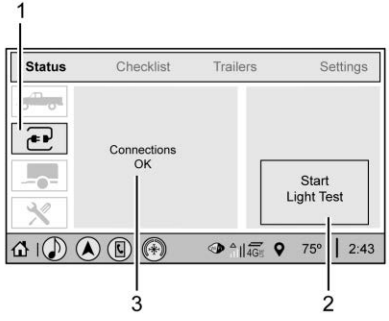

1. Connections Status Page
2. Light Test Start Button
3. Trailer Electrical Diagnostics

Connections OK

If all of the trailer connections are detected (Daytime Running Lights, Left Turn Signal Light, Right Turn Signal Light, Reverse Lights, and Electric Brakes, if equipped), the view will display OK.

Connection Problem

If any of the trailer connections are not detected, a message about the connection issue will appear on the Driver Information Center (DIC). The infotainment display will also show the connection issue in the Connection Status view.

Diagnose View

Touch Diagnose to see more information about the connection problem.

This view will display the names of the trailer connector pins, a graphic of the trailer connector, and a graphic of the back of the trailer.

Any connector pin that failed will be amber color, and the location of the corresponding connection will be highlighted on the graphic of the back of the trailer.

The Running Lights connection may not detect partial outages. Activate the light test to check all trailer lamps. See “Light Test” following.

If the trailer is not equipped with reverse lights or electric brakes and you are receiving failure messages in the DIC or on this view, turn off the Reverse Lights Alert or the Electric Brakes Alert setting in the trailer’s profile page.

Light Test

Touch Start Light Test to cycle the trailer lights on and off to determine if they are working. The test follows this sequence:

1. The running lights turn on first and remain on throughout the sequence.
2. The brake lights turn on for about two seconds.
3. The left turn signal light flashes three times.
4. The right turn signal light flashes three times.

5. The reverse lights turn on for about two seconds.
6. Steps 2–5 repeat for approximately one minute and 45 seconds, or until the test deactivates.

Touch Stop to stop the test. The test will automatically end after one minute and 45 seconds.

The sequence also deactivates when any of the following occur:

- The ignition is turned off.
- The transmission is shifted out of P (Park).
- The brake pedal is pressed.
- The turn signal is activated.
- The hazard warning lights are activated.

Trailer

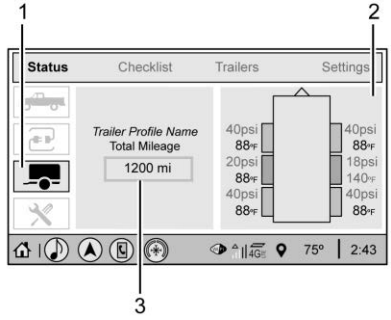

1. Trailer Status Page
2. Trailer Tire Pressure/ Temperature
3. Mileage of Trailer

Mileage

The mileage accumulated while this Trailer Profile is active will display. Touch mileage to edit.

Tire Pressure and Temperature

If the TTPMS sensor-to-vehicle learn process was completed, the status view will display the current tire pressure and temperature of the trailer tires related to the active Trailer Profile. If a tire's pressure is low or high, the color of the pressure value will be amber. If a sensor malfunctions, the values are dashed lines. If the screen displays "Service Tire Pressure Monitoring System", the vehicle needs to be taken to a dealer for service.

Maintenance

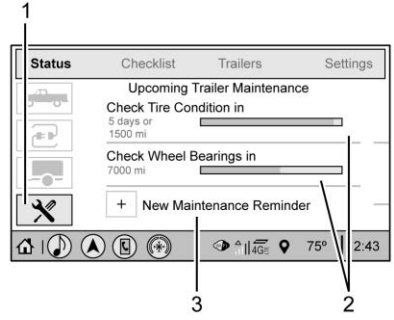

1. Maintenance Status Page
2. List of Maintenance Reminders
3. Add a New Maintenance Reminder

The Maintenance Status view displays reminders. Touch a reminder to edit.

Touch + New Maintenance Reminder to go to the Select New Reminder view.

The progress bar turns yellow when the maintenance item reaches 90% complete.

The progress bar turns red when the maintenance item reaches 100% complete.

Maintenance Notifications

- Touch Service Complete to reset the maintenance reminder.
- Touch Remind Me Later to delay the reminder.
- Touch X next to Upcoming Alerts (90%) to dismiss the alert. It will not appear again.
- Touch X next to Maintenance Due (100%) to delay the alert to the next ignition cycle.

Always follow all of the maintenance instructions that came with your trailer.

Guest Trailer Status View

Touch the Guest Trailer Profile for the status views.

The Trailer Status view displays mileage information. Touch to edit, and follow the on-screen prompts. Mileage and fuel economy will reset after the trailer disconnects.

Checklist View

This view shows the recommended steps to take before towing a trailer.

Touch the box next to each item if that step has been completed.

Touch ⓘ to access a detailed view of each step. Within each detailed view, touch Next and Previous to navigate between steps.

The checklist is unique to the Trailer Profile based on hitch type; for example, the steps involve different details between conventional, gooseneck, and fifth-wheel hitch types.

Custom Checklist Items

For each of the Trailer Profile checklists, there is an option to create custom items to view in the checklist. The custom item will appear at the bottom of the checklist.

Guest Trailer and No Trailer Connected

If Guest Trailer Profile is active or if no trailer is connected, the checklist will show all of the checklists associated with Custom Trailer Profiles in addition to default checklists.

Trailers View

Touch the Trailers tab to view, activate, create, edit, or delete Trailer Profiles.

If a trailer is connected, touch the Trailer Profile name to activate a Trailer Profile.

There can be up to five Custom Trailer Profiles on the vehicle.

The Custom Trailer Profiles and Guest Trailer are in order of the most frequently used.

All personalization features are based on the settings for each driver in vehicle personalization. The list of Trailer Profiles is based on vehicle personalization settings.

Guest Trailer

If the Guest Trailer Profile is the active Trailer Profile, trailer detection, connections status, security, and the Tow/Haul reminder alerts can be sent. The system will not track total mileage or fuel economy, but the system will track trip mileage and fuel economy if the Guest Trailer Profile is active. The Trailer Tire Pressure Monitoring System or maintenance reminders cannot be set up for a Guest Trailer Profile. The Guest Trailer Profile cannot be edited.

Touch ⓘ to learn more about the Guest Trailer option.

No Trailer Connected

When there is no trailer connected, Trailer Profiles cannot be activated but most options can be edited.

Trailer Brake Gain Memory

The system can memorize the brake gain setting of a Trailer Profile or a Guest Trailer Profile. When a Trailer Profile or Guest Trailer Profile is selected, and a brake gain setting is set for that Trailer Profile, a quick notice will appear to indicate that the system has recalled that profile's brake gain setting.

If a Trailer Profile is already active and the brake gain setting had been set for that Trailer Profile, the quick notice will trigger whenever the ignition is turned on.

If there was an error in setting the brake gain for a Trailer Profile, there will be a notification. This pop-up will not appear if the Guest Trailer Profile is active or if there is no trailer connected.

Trailer brake gain should be set for a specific trailering condition and must be adjusted anytime vehicle loading, trailer loading, or road surface conditions change.

See "Trailer Gain Adjustment Procedure" for information about the gain setting procedure.

Editing a Trailer Profile

Trailer Profile View

Touch to edit any of the following options in the Trailer Profile view:

- Trailer Name
- Hitch Type
- Trailer Type
- Tire Pressure Setup
- Maintenance Reminders
- Mileage
- Average Fuel Economy
- Reverse Lights Alert
- Electric Brakes Alert

Touch Save to save the new value to the Trailer Profile. Touching Back will still save the previously entered information.

Trailer Name

Touch to edit the Trailer Profile's name. Use at least one character and no spaces. Touch Save.

Hitch Type

Touch to edit the Trailer Profile's hitch type. The previously selected hitch type will be highlighted.

Touch a different hitch type and then touch Save to save it to the Trailer Profile. If a different hitch type is selected, any custom items added to the previous checklist will be carried over to the new selection.

If a different hitch type is saved, a new trailer type will need to be selected.

Trailer Type

Touch to edit the Trailer Profile's Trailer Type. The previously selected trailer type will be highlighted. Touch a different trailer type and then touch Save to save it to the Trailer Profile.

Tire Pressure Setup

Touch to set up the Trailer Tire Pressure Monitoring System (TTPMS) for the Trailer Profile. See "Trailer Tire Pressure Setup" under "Advanced Setup" for details on the setup. Also, touch Tire Pressure Setup if the trailer tires were rotated or if the tire pressure sensors in the tires were replaced for this Trailer Profile. The vehicle will need to relearn the tire sensors and their locations.

If TTPMS had been set up previously, the Select Number of Sensors screen will appear after touching Tire Pressure Setup. If the number of sensors has changed, select the number and touch Next.

If a new number of sensors is selected, the Relearn Sensors pop-up will appear. Touch Cancel to go back or touch Relearn to overwrite the current sensors and begin the relearning process. See "Trailer Tire Pressure Setup" previously in this section.

If number of sensors has not changed, touch Next and the Learn sensors screen will appear.

On the Learn Sensors screen, touch Relearn to overwrite the current sensors and begin the relearning process. See "Trailer Tire Pressure Setup" previously in this section.

On the Learn Sensors screen, touch Next to go to the Edit Recommended Tire Pressure screen.

On the Edit Recommended Tire Pressure screen, touch a number on the keypad to change the Recommended Tire Pressure for the trailer's tires. This will change the number at which the vehicle displays alerts related to trailer tire pressure. Touch Done to return to the Trailer Profile view.

Maintenance Reminders

Touch to view a list of maintenance reminders for the Trailer Profile.

Touch a reminder to view, reset, delete, or edit it.

Reset Reminder

Touch Maintenance Complete in the reminder view to reset the reminder. On the pop-up, touch Reset to reset the time and mileage values for the reminder. Touch Cancel to return to the previous view and nothing will change.

Edit Reminder

Touch to edit the mileage or time settings for the reminder. Touch Save to save the new settings to the Trailer Profile.

Delete Reminder

Touch to delete the maintenance reminder. On the pop-up, touch Delete to delete the reminder or touch Cancel to return to the previous view and nothing will change.

New Maintenance Reminder

Touch + New Maintenance Reminder to set up a new reminder. Suggested reminders that were previously set will have checkmarks next to them. Suggested reminders that have not been set will have empty boxes next to them. The maximum number of reminders is 10.

Mileage

Touch to edit the Trailer Profile's mileage.

Effect on Maintenance Reminders

If the mileage is reset or changed, and mileage has already accumulated, any maintenance reminders that have been set up will be adjusted accordingly.

Average Fuel Economy

Touch to reset the average fuel economy for the Trailer Profile. Touch Reset to change, or touch Cancel to go back to the previous view.

Reverse Lights Alert

Turn on to receive failure messages about the reverse lights. Turn off to not receive failure messages about the reverse lights, unless they are later detected. This setting cannot be edited when the Trailer Profile is inactive or when the trailer is disconnected.

Electric Brakes Alert

Turn on to receive failure messages about the electric trailer brakes. Turn off to not receive failure messages about the electric trailer brakes, unless they are later detected. This setting cannot be edited when the Trailer Profile is inactive or when the trailer is disconnected.

Delete Trailer

Touch to delete the Trailer Profile and all of its settings.

On the pop-up, touch Delete to delete the Trailer Profile. Touch Cancel to dismiss the pop-up and return to the previous view.

Settings View

Within the Trailering App, touch the Settings tab to modify the following settings:

- Trailer Detection Alert

- Maintenance Alerts
- Security Alert
- Tow/Haul Mode Reminder

Trailer Detection Alert

The Trailer Detection Alert setting will be on by default. Turn it off to disable the Trailer Detection pop-up from displaying when a trailer is connected. The Guest Trailer Profile will become the active Trailer Profile, unless another Trailer Profile is selected manually through the Trailering App. If this setting is disabled while a Custom Trailer Profile is active, that Trailer Profile will remain the active profile until the trailer is disconnected.

Maintenance Alerts

Touch Maintenance Alerts to view the Maintenance Alerts settings page. These alerts are based on the Trailer Profile, so the settings for each Trailer Profile must be turned on or off. Touch a profile to view more information or adjust the setting for that profile.

The setting will be on by default for each profile. All Maintenance Alerts for that active Trailer Profile will be received.

Turn a setting off to not receive any of the Maintenance Alerts when that Trailer Profile is active.

Security Alert

A security alert can be set if a trailer is connected and the alert is enabled. When the trailer is disconnected and the vehicle is off, an alarm will sound.

Touch Security Alert in Settings to view the Security Alert settings page. These alerts are based on the Trailer Profile, so the settings for each Trailer Profile must be turned on or off. Touch a profile to view more information or adjust the setting for that profile.

This setting will be off by default for each Trailer Profile, including the Guest Trailer Profile.

A smartphone will receive a notification that the trailer related to the selected Trailer Profile is disconnected from the vehicle, if the setting is on for the active Trailer Profile, the vehicle has an OnStar or connected service plan and the smartphone number has been added to the account for this notification.

If the setting is turned off for a given Trailer Profile, the smartphone will not receive this security notification even if the Trailer Profile is active.

Tow/Haul Mode Reminder

This is a reminder to turn on the Tow/Haul Mode when towing a trailer. See *Tow/Haul Mode* ⇨ *237*.

Touch Tow/Haul Mode Reminder in Settings to view the Tow/Haul Mode Reminder settings page. These alerts are based on the Trailer Profile, so the settings for each Trailer Profile must be turned on or off. Touch a profile to view more information or to adjust the setting for that profile.

This setting will default to OFF for each Trailer Profile, including the Guest Trailer Profile.

If Tow/Haul Mode is off and this setting is on for a Trailer Profile, each time the ignition is turned on a reminder will appear to turn on Tow/Haul Mode when the Trailer Profile is active.

If Tow/Haul Mode is on and this setting is on for a Trailer Profile, the reminder will not appear when the Trailer Profile is active.

Conversions and Add-Ons

Add-On Electrical Equipment

⚠ Warning

The Data Link Connector (DLC) is used for vehicle service and Emission Inspection/Maintenance testing. See *Malfunction Indicator Lamp (Check Engine Light)* ⇨ *151* . A device connected to the DLC — such as an aftermarket fleet or driver-behavior tracking device — may interfere with vehicle systems. This could affect vehicle operation and cause a crash. Such devices may also access information stored in the vehicle's systems.

Caution

Some electrical equipment can damage the vehicle or cause components to not work and would not be covered by the vehicle warranty. Always check with your dealer before adding electrical equipment.

Add-on equipment can drain the vehicle's 12-volt battery, even if the vehicle is not operating.

The vehicle has an airbag system. Before attempting to add anything electrical to the vehicle, see *Servicing the Airbag-Equipped Vehicle* ⇨ *97* and *Adding Equipment to the Airbag-Equipped Vehicle* ⇨ *98*.

For information on wiring auxiliary switches, see www.gmupfitter.com or contact your dealer.

Adding a Snow Plow or Similar Equipment

Caution

Do not exceed 72 km/h (45 mph) with a snow plow mounted to the vehicle. The vehicle could overheat and be damaged.

Before installing a snow plow on the vehicle, follow these guidelines:

Caution

If the vehicle does not have the snow plow prep package, RPO VYU, adding a plow can damage the vehicle, and the repairs would not be covered by the vehicle warranty. Unless the vehicle was built to carry a snow plow, do not add one to the vehicle. If the vehicle has RPO VYU, then the payload the vehicle can carry will be reduced when a snow plow is

(Continued)

Caution (Continued)

installed. The vehicle can be damaged if either the front or rear axle ratings or the Gross Vehicle Weight Rating (GVWR) are exceeded.

The plow the vehicle can carry depends on many things, such as:

- The options the vehicle came with, and the weight of those options.
- The weight and number of passengers to be carried.
- The weight of items added to the vehicle, like a tool box or truck cap.
- The total weight of any additional cargo to be carried.

For example, if the snow plow weighs 318 kg (700 lb), the total weight of all occupants and cargo inside the cab should not exceed 135 kg (300 lb). This means that you may only be able to carry one passenger. Even this may be too much if there is other equipment already adding to the weight of the vehicle.

To safely carry a snow plow on the vehicle:

- Follow all aftermarket snow plow manufacturer's instructions for the operation and transportation of the snow plow.
- With a snow plow attached, the engine coolant temperature gauge may show a higher temperature than while driving without one. The snow plow could block the airflow to the radiator. This could be more noticeable as vehicle speed increases. At speeds above 72 km (45 mph), this may cause the engine coolant to overheat.
- To increase the airflow, move the snow plow blade postion.
- If driving more than 24 km (15 mi), angle the plow blade position.

- Make sure the weight on the front and rear axles does not exceed the axle rating for each.
- For the front axle, if more cargo or passengers must be carried, appropriate counter ballast must be installed rear of the rear axle. Counter ballast must be properly secured so it will not move during driving.
- Rear ballast may be required to ensure a proper front and rear weight distribution ratio, even though the actual weight at the front axle may be less than the front axle rating.
- The snow plow manufacturer or installer can assist in determining the amount of rear ballast required, to help make sure the snow plow/vehicle combination does not exceed the GVW rating, the front and rear axle ratings, and the front and rear weight distribution ratio.
- The total vehicle must not exceed the GVW rating.

Front axle reserve capacity is the difference between the Gross Axle Weight Rating (GAWR) and the front axle weight of the vehicle with full fuel and passengers. This is the amount of weight that can be added to the front axle before reaching the front GAWR.

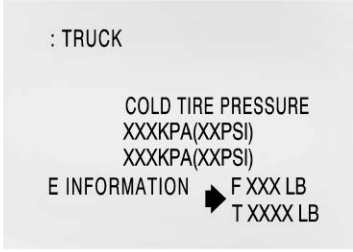

United States

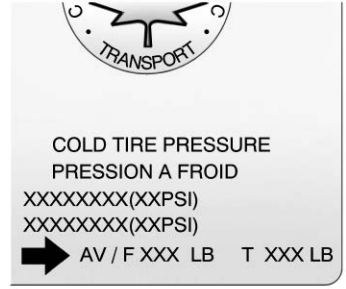

Canada

The front axle reserve capacity for the vehicle is in the lower right corner of the Certification/Tire label.

To calculate the amount of weight any front accessory, such as a snow plow, is adding to the front axle, use this formula:

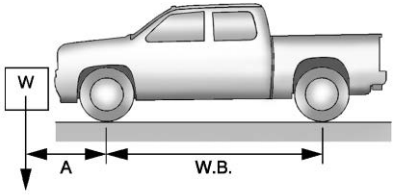

(W x (A + W.B.)) /W.B.= Weight the accessory is adding to the front axle.

Where:

W = Weight of added accessory
A = Distance that the accessory is in front of the front axle
W.B. = Vehicle Wheelbase

For example, adding a 318 kg (700 lb) snow plow actually adds more than 318 kg (700 lb) to the front axle. Using the formula, if the snow plow is 122 cm (4 ft) in front of the front axle and the wheelbase is 305 cm (10 ft), then:

W = 318 kg (700 lb)
A = 122 cm (4 ft)
W.B. = 305 cm (10 ft)

(W x (A + W.B.)/W.B. = (318 x (122 + 305))/305 = 445 kg (980 lb)

This means if the front axle reserve capacity is more than 445 kg (980 lb), the snow plow could be added without exceeding the front GAWR.

Heavier equipment can be added on the front of the vehicle if less cargo or fewer passengers are carried, or by positioning cargo toward the rear. This reduces the load on the front. However, the front GAWR, rear GAWR, and Gross Vehicle Weight Rating (GVWR) must never be exceeded.

⚠ Warning

On some vehicles that have certain front mounted equipment, such as a snow plow, it may be possible to load the front axle to the front Gross Axle Weight Rating (GAWR) but not have

(Continued)

Warning (Continued)

enough weight on the rear axle to have proper braking performance. If the brakes cannot work properly, the vehicle could crash. Always follow the snow plow manufacturer or installer's recommendation for rear ballast to ensure a proper front and rear weight distribution ratio. Maintaining a proper front and rear weight distribution ratio is necessary to provide proper braking performance.

Total vehicle reserve capacity is the difference between the GVWR and the weight of the truck with full fuel and passengers. It is the amount of weight that can be added to the vehicle before reaching the GVWR. Reserve capacity numbers are intended as a guide when selecting the amount of equipment or cargo the truck can carry. If unsure of the vehicle's front, rear, or total weight,

go to a weigh station and weigh the vehicle. Your dealer can also help with this.

The total vehicle reserve capacity for the vehicle is in the lower right corner of the Certification/Tire label as shown previously.

See your dealer for additional advice and information about using a snow plow on the vehicle. Also, see *Vehicle Load Limits* ⇨ *211*.

Pickup Conversion to Chassis Cab

We are aware that some vehicle owners might consider having the pickup box removed and a commercial or recreational body installed. Owners should be aware that, as manufactured, there are differences between a chassis cab and a pickup with the box removed which could affect vehicle safety. The components necessary to adapt a pickup to permit its safe use with a specialized body should be installed by the body builder.

Vehicle Care

General Information
General Information 316
California Proposition 65 Warning 317
California Perchlorate Materials Requirements 317
Accessories and Modifications 317

Vehicle Checks
Doing Your Own Service Work 318
Hood 318
Engine Compartment Overview 320
Engine Oil 325
Engine Oil Life System 327
Automatic Transmission Fluid 329
Engine Air Filter Life System 329
Engine Air Cleaner/Filter 330
Cooling System 331
Engine Overheating 335
Overheated Engine Protection Operating Mode 337
Engine Fan 337
Washer Fluid 338
Brakes 339
Brake Pad Life System 339
Brake Fluid 340
Battery - North America 341
Four-Wheel Drive 344
Front Axle 344
Rear Axle 345
Noise Control System 346
Starter Switch Check 347
Ignition Transmission Lock Check 347
Park Brake and P (Park) Mechanism Check 347
Wiper Blade Replacement 348
Windshield Replacement 349
Gas Strut(s) 349

Headlamp Aiming
Headlamp Aiming 350

Bulb Replacement
Bulb Replacement 350
Halogen Bulbs 350
LED Lighting 351
Headlamps, Front Turn Signal, Sidemarker, and Parking Lamps 351
Taillamps, Turn Signal, Stoplamps, and Back-Up Lamps 351
Center High-Mounted Stoplamp (CHMSL) and Cargo Lamp 352
License Plate Lamp 353

Electrical System
Electrical System Overload . . . 353
Fuses and Circuit Breakers . . . 354
Engine Compartment Fuse Block 354
Instrument Panel Fuse Block (Right) 358
Instrument Panel Fuse Block (Left) 360

Wheels and Tires
Tires 362
All-Season Tires 363
Winter Tires 363
Low-Profile Tires 364
All-Terrain Tires 364
Tire Sidewall Labeling 364
Tire Designations 367
Tire Terminology and Definitions 368
Tire Pressure 371
Tire Pressure for High-Speed Operation 372
Tire Pressure Monitor System 373

Tire Pressure Monitor Operation 374
Tire Inspection 379
Tire Rotation 380
When It Is Time for New Tires 381
Buying New Tires 382
Different Size Tires and Wheels 383
Uniform Tire Quality Grading 384
Wheel Alignment and Tire Balance 385
Wheel Replacement 385
Tire Chains 386
If a Tire Goes Flat 387
Tire Changing 389
Full-Size Spare Tire 398

Jump Starting
Jump Starting - North America 399

Towing the Vehicle
Towing the Vehicle 402
Recreational Vehicle Towing 403

Appearance Care
Exterior Care 407
Interior Care 412
Floor Mats 415

General Information

For service and parts needs, visit your dealer. You will receive genuine GM parts and GM-trained and supported service people.

Genuine GM parts have one of these marks:

ACDelco

GM GENUINE PARTS

GMC

ACCESSORIES

California Proposition 65 Warning

⚠ Warning

Most motor vehicles, including this one, as well as many of its service parts and fluids, contain and/or emit chemicals known to the State of California to cause cancer and birth defects or other reproductive harm. Engine exhaust, many parts and systems, many fluids, and some component wear by-products contain and/or emit these chemicals. For more information go to www.P65Warnings.ca.gov/passenger-vehicle.

See *Battery - North America* ⇨ *341* and *Jump Starting - North America* ⇨ *399* and the back cover.

California Perchlorate Materials Requirements

Certain types of automotive applications, such as airbag initiators, seat belt pretensioners, and lithium batteries contained in Remote Keyless Entry transmitters, may contain perchlorate materials. Special handling may be necessary. For additional information, see www.dtsc.ca.gov/hazardouswaste/perchlorate.

Accessories and Modifications

Adding non-dealer accessories or making modifications to the vehicle can affect vehicle performance and safety, including such things as airbags, braking, stability, ride and handling, emissions systems, aerodynamics, durability, and electronic systems like antilock brakes, traction control, and stability control. These accessories or modifications could even cause malfunction or damage not covered by the vehicle warranty.

Damage to suspension components caused by modifying vehicle height outside of factory settings will not be covered by the vehicle warranty.

Damage to vehicle components resulting from modifications or the installation or use of non-GM certified parts, including control module or software modifications, is not covered under the terms of the vehicle warranty and may affect remaining warranty coverage for affected parts.

GM Accessories are designed to complement and function with other systems on the vehicle. See your dealer to accessorize the vehicle using genuine GM Accessories installed by a dealer technician.

Also, see *Adding Equipment to the Airbag-Equipped Vehicle* ⇨ *98*.

Vehicle Checks

Doing Your Own Service Work

⚠ Warning

It can be dangerous to work on your vehicle if you do not have the proper knowledge, service manual, tools, or parts. Always follow owner's manual procedures and consult the service manual for your vehicle before doing any service work.

If doing some of your own service work, use the proper service manual. It tells you much more about how to service the vehicle than this manual can. To order the proper service manual, see *Publication Ordering Information* ⇨ *446*.

This vehicle has an airbag system. Before attempting to do your own service work, see *Servicing the Airbag-Equipped Vehicle* ⇨ *97*.

If equipped with remote vehicle start, open the hood before performing any service work to prevent remote starting the vehicle accidentally. See *Remote Vehicle Start* ⇨ *44*.

Keep a record with all parts receipts and list the mileage and the date of any service work performed. See *Maintenance Records* ⇨ *432*.

Caution

Even small amounts of contamination can cause damage to vehicle systems. Do not allow contaminants to contact the fluids, reservoir caps, or dipsticks.

Hood

⚠ Warning

Turn the vehicle off before opening the hood. If the vehicle is on, the engine will start when the hood is opened. You or others could be injured.

⚠ Warning

Components under the hood can get hot from running the engine. To help avoid the risk of burning unprotected skin, never touch these components until they have cooled, and always use a glove or towel to avoid direct skin contact.

Clear any snow from the hood before opening.

To open the hood:

1. Pull the hood release lever with the symbol. It is on the lower left side of the instrument panel.
2. Go to the front of the vehicle and locate the secondary release lever under the front center of the hood. Push the secondary hood release lever to the right to release.

3. After you have partially lifted the hood, the gas strut system will automatically lift the hood and hold it in the fully open position.

To close the hood:

1. Before closing the hood, be sure all filler caps are on properly, and all tools are removed.
2. Pull the hood down until the strut system is no longer holding up the hood.
3. Allow the hood to fall. Check to make sure the hood is latched completely. Repeat this process with additional force if necessary.

⚠ Warning

Do not drive the vehicle if the hood is not latched completely. The hood could open fully, block your vision, and cause a crash.

(Continued)

Warning (Continued)

You or others could be injured. Always close the hood completely before driving.

The Driver Information Center (DIC) will display a message if the hood is not fully closed, and the vehicle is moving. Stop and turn off the vehicle, check the hood for obstructions, and close the hood again. Check to see if the message still appears on the DIC.

Engine Compartment Overview

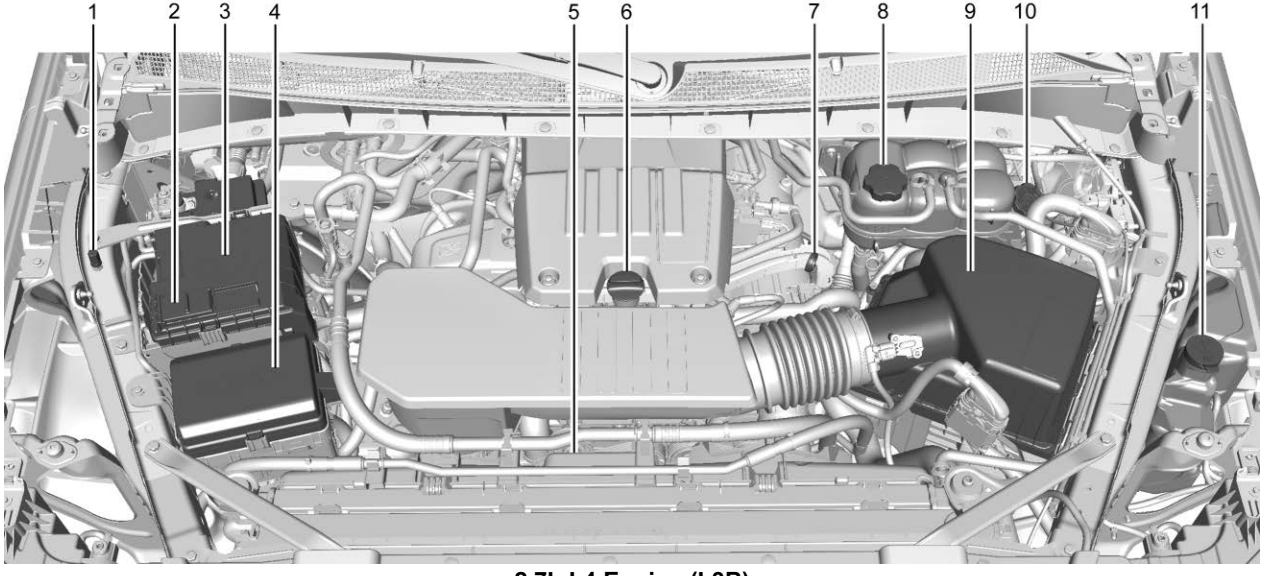

2.7L L4 Engine (L3B)

1. Remote Negative (–) Location. See *Jump Starting - North America* ⇨ *399*.
2. Positive (+) Terminal (Under Cover). See *Jump Starting - North America* ⇨ *399*.
3. *Battery - North America* ⇨ *341*.
4. *Engine Compartment Fuse Block* ⇨ *354*.
5. Engine Cooling Fans (Out of View). See *Cooling System* ⇨ *331*.
6. Engine Oil Fill Cap. See “When to Add Engine Oil” under *Engine Oil* ⇨ *325*.
7. Engine Oil Dipstick. See “Checking Engine Oil” under *Engine Oil* ⇨ *325*.
8. Coolant Surge Tank and Pressure Cap. See *Cooling System* ⇨ *331*.
9. *Engine Air Cleaner/Filter* ⇨ *330*.
10. Brake Fluid Reservoir. See *Brake Fluid* ⇨ *340*.
11. Windshield Washer Fluid Reservoir. See “Adding Washer Fluid” under *Washer Fluid* ⇨ *338*.

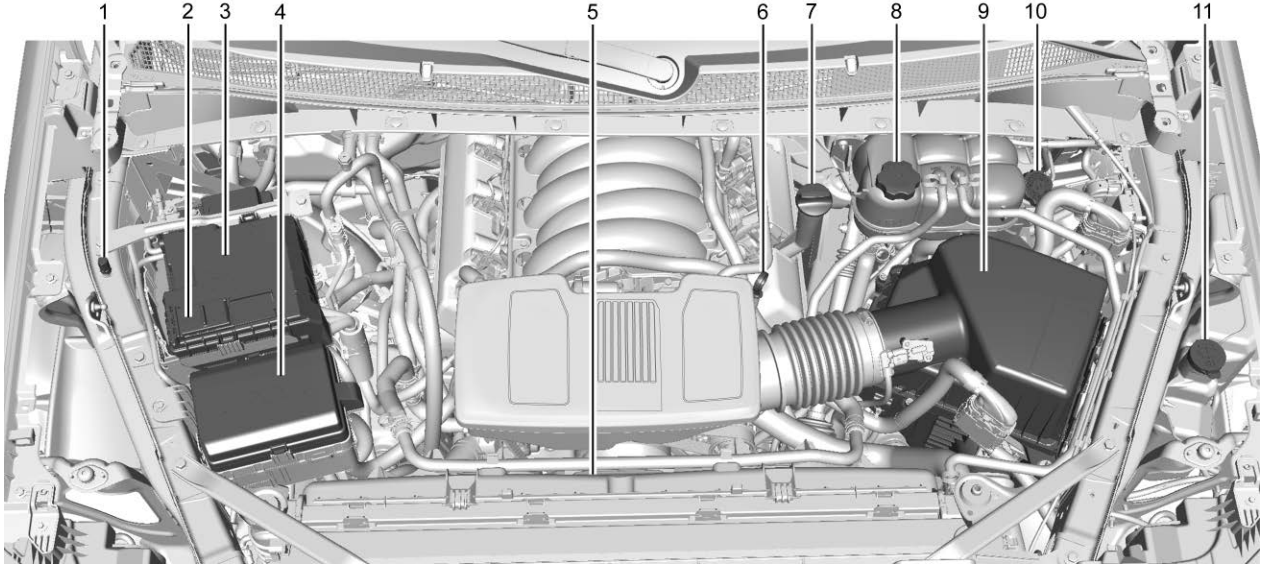

4.3L V6 Engine (LV3)

1. Remote Negative (–) Location. See *Jump Starting - North America* ⇨ *399*.
2. Positive (+) Terminal (Under Cover). See *Jump Starting - North America* ⇨ *399*.
3. *Battery - North America* ⇨ *341*.
4. *Engine Compartment Fuse Block* ⇨ *354*.
5. Engine Cooling Fans (Out of View). See *Cooling System* ⇨ *331*.
6. Engine Oil Dipstick. See “Checking Engine Oil” under *Engine Oil* ⇨ *325*.
7. Engine Oil Fill Cap. See “When to Add Engine Oil” under *Engine Oil* ⇨ *325*.
8. Coolant Surge Tank and Pressure Cap. See *Cooling System* ⇨ *331*.
9. *Engine Air Cleaner/Filter* ⇨ *330*.
10. Brake Fluid Reservoir. See *Brake Fluid* ⇨ *340*.
11. Windshield Washer Fluid Reservoir. See “Adding Washer Fluid” under *Washer Fluid* ⇨ *338*.

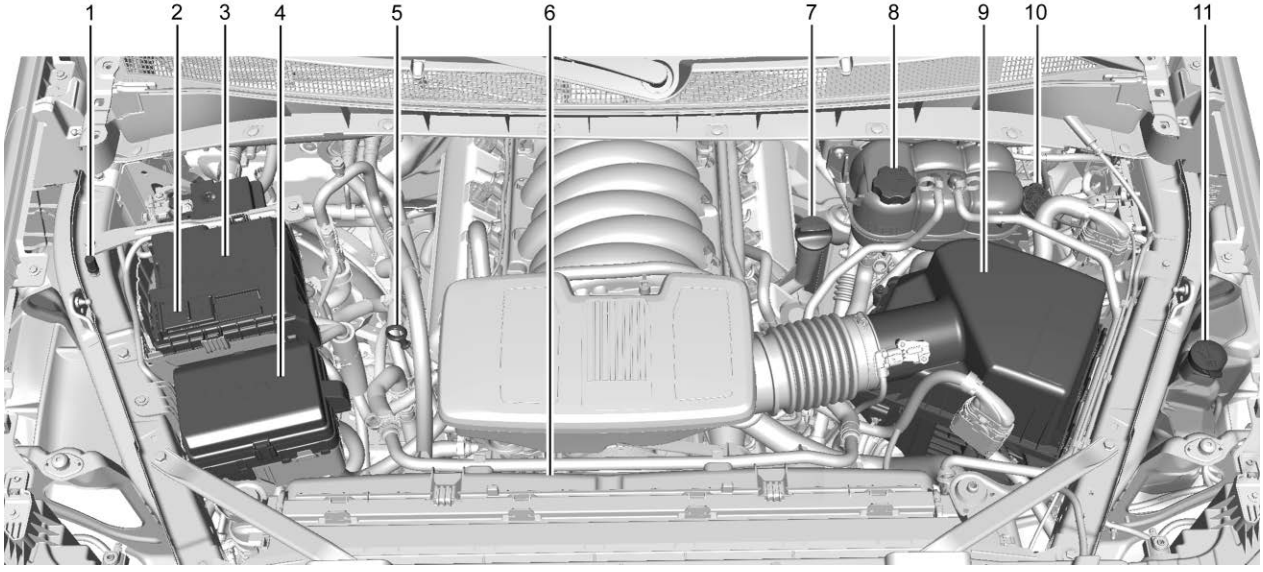

5.3L V8 Engine (L84) Shown, 5.3L V8 Engine (L82) and 6.2L V8 Engine (L87) Similar

1. Remote Negative (–) Location. See *Jump Starting - North America* ⇨ *399*.
2. Positive (+) Terminal (Under Cover). See *Jump Starting - North America* ⇨ *399*.
3. *Battery - North America* ⇨ *341*.
4. *Engine Compartment Fuse Block* ⇨ *354*.
5. Engine Oil Dipstick. See “Checking Engine Oil” under *Engine Oil* ⇨ *325*.
6. Engine Cooling Fans (Out of View). See *Cooling System* ⇨ *331*.
7. Engine Oil Fill Cap. See “When to Add Engine Oil” under *Engine Oil* ⇨ *325*.
8. Coolant Surge Tank and Pressure Cap. See *Cooling System* ⇨ *331*.
9. *Engine Air Cleaner/Filter* ⇨ *330*.
10. Brake Fluid Reservoir. See *Brake Fluid* ⇨ *340*.
11. Windshield Washer Fluid Reservoir. See “Adding Washer Fluid” under *Washer Fluid* ⇨ *338*.

If the vehicle has a diesel engine, see the Duramax diesel supplement.

Engine Oil

For diesel engine vehicles, see “Engine Oil” in the Duramax diesel supplement.

To ensure proper engine performance and long life, careful attention must be paid to engine oil. Following these simple, but important steps will help protect your investment:

- Use engine oil approved to the proper specification and of the proper viscosity grade. See “Selecting the Right Engine Oil” in this section.
- Check the engine oil level regularly and maintain the proper oil level. See “Checking Engine Oil” and “When to Add Engine Oil” in this section.
- Change the engine oil at the appropriate time. See *Engine Oil Life System* ⇨ *327*.
- Always dispose of engine oil properly. See “What to Do with Used Oil” in this section.

Checking Engine Oil

Check the engine oil level regularly, every 650 km (400 mi), especially prior to a long trip. The engine oil dipstick handle is a loop. See *Engine Compartment Overview* ⇨ *320* for the location.

⚠ Warning

The engine oil dipstick handle may be hot; it could burn you. Use a towel or glove to touch the dipstick handle.

If a low oil Driver Information Center (DIC) message displays, check the oil level.

Follow these guidelines:

- To get an accurate reading, park the vehicle on level ground. Check the engine oil level after the engine has been off for at least two hours. Checking the engine oil level on steep grades or too soon after engine shutoff can result in incorrect readings. Accuracy improves when checking a cold engine prior to starting. Remove the dipstick and check the level.
- If unable to wait two hours, the engine must be off for at least 15 minutes if the engine is warm, or at least 30 minutes if the engine is not warm. Pull out the dipstick, wipe it with a clean paper towel or cloth, then push it back in all the way. Remove it again, keeping the tip down, and check the level.

When to Add Engine Oil

If the oil is below the cross-hatched area at the tip of the dipstick and the engine has been off for at least 15 minutes, add 1 L (1 qt) of the recommended oil and then recheck the level. See “Selecting the Right Engine Oil” later in this section for an explanation of what kind of oil to use. For engine oil crankcase capacity, see *Capacities and Specifications* ⇨ *434*.

Caution

Do not add too much oil. Oil levels above or below the acceptable operating range shown on the dipstick are harmful to the engine. If the oil level is

(Continued)

Caution (Continued)

above the operating range (i.e., the engine has so much oil that the oil level gets above the cross-hatched area that shows the proper operating range), the engine could be damaged. Drain the excess oil or limit driving of the vehicle, and seek a service professional to remove the excess oil.

See *Engine Compartment Overview* ⇨ *320* for the location of the engine oil fill cap.

Add enough oil to put the level somewhere in the proper operating range. Push the dipstick all the way back in when through.

Selecting the Right Engine Oil

Selecting the right engine oil depends on both the proper oil specification and viscosity grade. See *Recommended Fluids and Lubricants* ⇨ *429*.

Specification

Use full synthetic engine oils that meet the dexos1 specification. Engine oils that have been approved by GM as meeting the dexos1 specification are marked with the dexos1 approved logo.

Caution
Failure to use the recommended engine oil or equivalent can result in engine damage not covered by the vehicle warranty.

Viscosity Grade

Use SAE 0W-20 viscosity grade engine oil for the 5.3L and 6.2L V8 engines.

Use SAE 5W-30 viscosity grade engine oil for the 2.7L L4 and 4.3L V6 engines. Cold Temperature Operation: In an area of extreme cold, where the temperature falls below −29 °C (−20 °F), use SAE 0W-30 oil in the 2.7L or 4.3L engine. An oil of this viscosity grade will provide easier cold starting for the engine at extremely low temperatures.

When selecting an oil of the appropriate viscosity grade, it is recommended to select an oil of the correct specification. See “Specification” earlier in this section.

Engine Oil Additives/Engine Oil Flushes

Do not add anything to the oil. The recommended oils meeting the dexos1 specification are all that is needed for good performance and engine protection.

Engine oil system flushes are not recommended and could cause engine damage not covered by the vehicle warranty.

What to Do with Used Oil

Used engine oil contains certain elements that can be unhealthy for your skin and could even cause cancer. Do not let used oil stay on your skin for very long. Clean your skin and nails with soap and water, or a good hand cleaner. Wash or properly dispose of clothing or rags containing used engine oil. See the manufacturer's warnings about the use and disposal of oil products.

Used oil can be a threat to the environment. If you change your own oil, be sure to drain all the oil from the filter before disposal. Never dispose of oil by putting it in the trash or pouring it on the ground, into sewers, or into streams or bodies of water. Recycle it by taking it to a place that collects used oil.

Engine Oil Life System

When to Change Engine Oil

This vehicle has a computer system that indicates when to change the engine oil and filter. This is based on a combination of factors which

include engine revolutions, engine temperature, and miles driven. Based on driving conditions, the mileage at which an oil change is indicated can vary considerably. For the oil life system to work properly, the system must be reset every time the oil is changed.

On some vehicles, when the system has calculated that oil life has been diminished, a CHANGE ENGINE OIL SOON message comes on to indicate that an oil change is necessary. Change the oil as soon as possible within the next 1 000 km (600 mi). It is possible that, if driving under the best conditions, the oil life system might indicate that an oil change is not necessary for up to a year. The engine oil and filter must be changed at least once a year and, at this time, the system must be reset. For vehicles without the CHANGE ENGINE OIL SOON message, an oil change is needed when the REMAINING OIL LIFE percentage is near 0%. Your dealer has trained service people who will perform this work and reset the system. It is also important to check the oil regularly over the course of an oil drain interval and keep it at the proper level.

If the system is ever reset accidentally, the oil must be changed at 5 000 km (3,000 mi) since the last oil change. Remember to reset the oil life system whenever the oil is changed.

How to Reset the Engine Oil Life System

Reset the system whenever the engine oil is changed so that the system can calculate the next engine oil change. Always reset the engine oil life to 100% after every oil change. It will not reset itself. To reset the engine oil life system:

1. Display the oil life percentage on the DIC. See *Driver Information Center (DIC) (Midlevel and Uplevel)* ⇨ *162* or *Driver Information Center (DIC) (Base Level)* ⇨ *161*.
2. Press the thumbwheel on the steering wheel, or the trip odometer reset stem if the vehicle does not have DIC controls, for several seconds. When the confirmation message displays, select YES. The oil life will change to 100%.

The oil life system can also be reset as follows:

1. Display the oil life percentage on the DIC. See *Driver Information Center (DIC) (Midlevel and Uplevel)* ⇨ *162* or *Driver Information Center (DIC) (Base Level)* ⇨ *161*.
2. Fully press the accelerator pedal slowly three times within five seconds.
3. If the display changes to 100%, the system is reset.

If the vehicle has a CHANGE ENGINE OIL SOON message and it comes back on when the vehicle is started and/or the oil life percentage is near 0%, the engine oil life system has not been reset. Repeat the procedure.

Automatic Transmission Fluid

When to Check and Change Automatic Transmission Fluid

It is usually not necessary to check the transmission fluid level. The only reason for fluid loss is a transmission leak or overheated transmission. This vehicle is not equipped with a transmission fluid level dipstick. There is a special procedure for checking and changing the transmission fluid in these vehicles. Because this procedure is difficult, this should be done at the dealer. Contact the dealer for additional information or the procedure can be found in the service manual. See *Publication Ordering Information* ⇨ *446*.

Caution

Use of the incorrect automatic transmission fluid may damage the vehicle, and the damage may

(Continued)

Caution (Continued)

not be covered by the vehicle warranty. Always use the correct automatic transmission fluid. See *Recommended Fluids and Lubricants* ⇨ *429*.

Change the fluid and filter at the scheduled maintenance intervals listed in *Maintenance Schedule* ⇨ *419*. Be sure to use the transmission fluid listed in *Recommended Fluids and Lubricants* ⇨ *429*.

Engine Air Filter Life System

If equipped, this feature provides the engine air filter's remaining life and best timing for a change. The timing to change an engine air filter depends on driving and environmental conditions.

When to Change the Engine Air Filter

When the Driver Information Center (DIC) displays a message to replace the engine air filter at the next oil change, follow this timing.

When the DIC displays a message to replace the engine air filter soon, replace the engine air filter at the earliest convenience.

The system must be reset after the engine air filter is changed.

If the DIC displays a message to check the engine air filter system, see your dealer.

How to Reset the Engine Air Filter Life System

To reset:

1. Place the vehicle in P (Park).
2. Display the Air Filter Life on the DIC. See *Driver Information Center (DIC) (Midlevel and Uplevel)* ⇨ *162* or *Driver Information Center (DIC) (Base Level)* ⇨ *161*.

3. Press > on the steering wheel, or press the trip odometer reset stem if the vehicle does not have DIC controls, to move to the Reset/Disable display area. Select Reset, then press the thumbwheel or press the reset stem for several seconds.
4. Press the thumbwheel or the reset stem to confirm the reset.

Engine Air Cleaner/Filter

The engine air cleaner/filter is on the driver side of the engine compartment. See *Engine Compartment Overview* ⇨ *320*.

When to Inspect the Engine Air Cleaner/Filter

If the vehicle is not equipped with the engine air filter life system, see *Maintenance Schedule* ⇨ *419* for intervals on inspecting and replacing changing the engine air cleaner/filter.

How to Inspect/Replace the Engine Air Cleaner/Filter

Do not start the engine or have the engine running with the engine air cleaner/filter housing open. Before removing the engine air cleaner/filter, make sure that the engine air cleaner/filter housing and nearby components are free of dirt and debris. Do not clean the engine air cleaner/filter or components with water or compressed air.

To inspect or replace the engine air cleaner/filter:

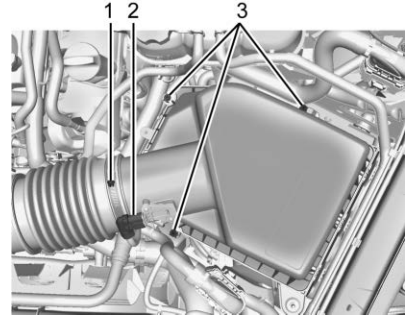

5.3L V8 Engine (L84) Shown, 2.7L L4 Engine (L3B), 4.3L V6 Engine (LV3), 5.3L V8 Engine (L82), and 6.2L V8 Engine (L87) Similar

1. Air Duct Clamp
2. Electrical Harness Connector
3. Screws

1. Locate the air cleaner/filter assembly. See *Engine Compartment Overview* ⇨ *320*.
2. Disconnect the outlet duct by loosening the air duct clamp (1).

3. Disconnect the electrical harness connector (2) from the cover.
4. Remove the three screws on top of the cover of the housing, then slide and lift the cover.
5. Lift and remove the engine air cleaner/filter.
6. Lightly tap and shake the engine air cleaner/filter, away from the vehicle, to release loose dust and dirt. Replace the engine air filter if damaged.
7. Reverse Steps 2–5 to reinstall the engine air cleaner/filter cover housing.
8. If equipped, reset the engine air filter life system after replacing the engine air filter. See *Engine Air Filter Life System* ⇨ *329*.

⚠ Warning

Operating the engine with the air cleaner/filter off can cause you or others to be burned. Use caution when working on the engine. Do not start the engine or drive the vehicle with the air cleaner/filter off, as flames may be present if the engine backfires.

Caution

If the air cleaner/filter is off, dirt can easily get into the engine, which could damage it. Always have the air cleaner/filter in place when driving.

Cooling System

If the vehicle has the Duramax diesel engine, see the Duramax diesel supplement.

The cooling system allows the engine to maintain the correct working temperature.

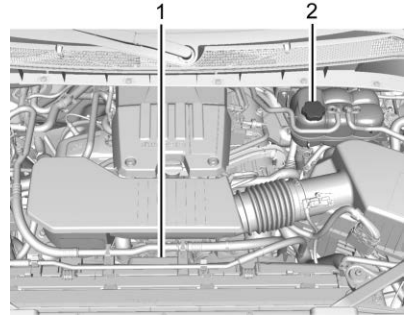

2.7L L4 Engine (L3B)

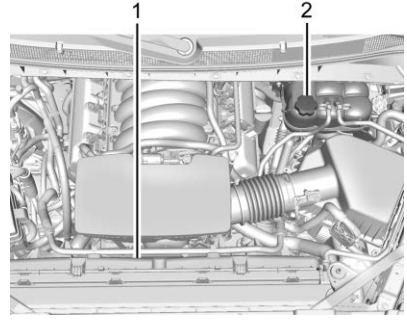

4.3L V6 Engine (LV3)

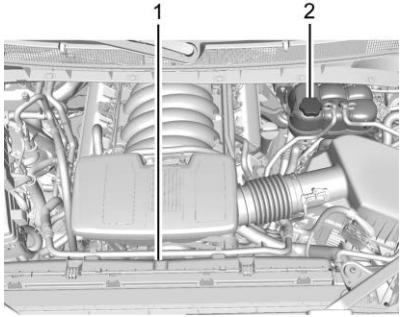

5.3L V8 Engine (L84) Shown, 5.3L V8 Engine (L82) and 6.2L V8 Engine (L87) Similar

1. Engine Electric Cooling Fans (Out of View)
2. Coolant Surge Tank and Pressure Cap

⚠ Warning

An underhood electric fan can start up even when the engine is not running and can cause injury. Keep hands, clothing, and tools away from any underhood electric fan.

⚠ Warning

Do not touch heater, radiator, a/c pipes or hoses, or other engine parts. They can be very hot and can burn you. Do not run the engine if there is a leak; all coolant could leak out. That could cause an engine fire and can burn you. Fix any leak before driving the vehicle.

Engine Coolant

The cooling system in the vehicle is filled with DEX-COOL engine coolant. This coolant is designed to remain in the vehicle for 5 years or 240 000 km (150,000 mi), whichever occurs first.

The following explains the cooling system and how to check and add coolant when it is low. If there is a problem with engine overheating, see *Engine Overheating* ⇨ *335*.

What to Use

⚠ Warning

Plain water, or other liquids such as alcohol, can boil before the proper coolant mixture will. With plain water or the wrong mixture, the engine could get too hot but there would not be an overheat warning. The engine could catch fire and you or others could be burned.

Use a 50/50 mixture of clean, drinkable water and DEX-COOL coolant. This mixture:

- Gives freezing protection down to −37 °C (−34 °F), outside temperature.
- Gives boiling protection up to 129 °C (265 °F), engine temperature.
- Protects against rust and corrosion.
- Will not damage aluminum parts.

- Helps keep the proper engine temperature.

Caution

Do not use anything other than a mix of DEX-COOL coolant that meets GM Standard GMW3420 and clean, drinkable water. Anything else can cause damage to the engine cooling system and the vehicle, which would not be covered by the vehicle warranty.

Never dispose of engine coolant by putting it in the trash, or by pouring it on the ground, or into sewers, streams, or bodies of water. Have the coolant changed by an authorized service center, familiar with legal requirements regarding used coolant disposal. This will help protect the environment and your health.

Checking Coolant

The coolant surge tank is in the engine compartment on the driver side of the vehicle. See *Engine Compartment Overview* ⇨ *320*.

The vehicle must be on a level surface when checking the coolant level.

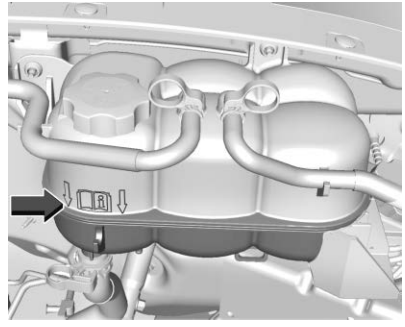

Check to see if coolant is visible in the coolant surge tank. If the coolant inside the coolant surge tank is boiling, wait until it cools down. The coolant level should be at or above the indicated mark. If it is not, there may be a leak in the cooling system.

If coolant is visible but the coolant level is not at or above the indicated mark, see the following sections on how to add coolant to the coolant surge tank.

Automatic Coolant Service Fill Instructions (L3B Engine)

See 3.0L Duramax Diesel supplement for the diesel engine procedure.

If equipped, this feature assists in filling and removing air from the cooling system after service of components or when coolant is added after being too low.

To activate the fill and air removal process:

1. With a cold system, add coolant to the indicated mark on the surge tank.
2. Replace the cap on the surge tank.

3. Connect the vehicle to a battery charger.
4. Turn the ignition on for Key Access vehicles or to Service Only for Keyless Access vehicles. See *Ignition Positions (Key Access)* ⇨ *219* or *Ignition Positions (Keyless Access)* ⇨ *221*.
5. Turn off the air conditioning.
6. Set the parking brake.
7. At the same time, press the accelerator and the brake for automatic transmission vehicles for two seconds, then release.

At the end of the cycle, check the coolant level in the surge tank and add coolant if it is low. Turn off the vehicle, allow the Electronic Control Module (ECM) to go to sleep, about 2 minutes, and repeat Steps 3-7.

Listen for pump activation and movement of the control valves while watching the level of the coolant in the surge tank. If the tank empties, turn the ignition off, carefully remove the surge tank cap, refill to the indicated mark, and repeat Steps 3-6. The fill and air removal process will run for approximately 10 minutes.

How to Add Coolant to the Coolant Surge Tank for Gasoline Engines Except L3B

If the vehicle has a diesel engine, see “Cooling System” in the Duramax diesel supplement for the proper coolant fill procedure.

⚠ Warning

Spilling coolant on hot engine parts can burn you. Coolant contains ethylene glycol and it will burn if the engine parts are hot enough.

⚠ Warning

Plain water, or other liquids such as alcohol, can boil before the proper coolant mixture will. With plain water or the wrong mixture, the engine could get too hot but there would not be an overheat warning. The engine could catch fire and you or others could be burned.

⚠ Warning

Steam and scalding liquids from a hot cooling system are under pressure. Turning the pressure cap, even a little, can cause them to come out at high speed and you could be burned. Never turn the cap when the cooling system, including the pressure cap, is hot. Wait for the cooling system and pressure cap to cool.

Caution

Failure to follow the specific coolant fill procedure could cause the engine to overheat and could cause system damage. If coolant is not visible in the surge tank, contact your dealer.

If no coolant is visible in the surge tank, add coolant.

1. Remove the coolant surge tank pressure cap when the cooling system, including the coolant surge tank pressure cap and upper radiator hose, is no longer hot.

   Turn the pressure cap slowly counterclockwise about one full turn. If a hiss is heard, wait for that to stop. A hiss means there is still some pressure left.
2. Keep turning the pressure cap slowly, and remove it.
3. Fill the coolant surge tank with the proper mixture to the full cold mark.
4. With the coolant surge tank pressure cap off, start the engine and let it run until the engine coolant temperature gauge indicates approximately 90 °C (195 °F).

   By this time, the coolant level inside the coolant surge tank may be lower. If the level is lower, add more of the proper mixture to the coolant surge tank until the level reaches the indicated mark.
5. Replace the pressure cap tightly.
6. Verify coolant level after the engine is shut off and the coolant is cold. If necessary, repeat coolant fill procedure Steps 1–6.

Caution

If the pressure cap is not tightly installed, coolant loss and engine damage may occur. Be sure the cap is properly and tightly secured.

Engine Overheating

If the vehicle has the Duramax diesel engine, see the Duramax diesel supplement.

Caution

Do not run the engine if there is a leak in the engine cooling system. This can cause a loss of all coolant and can damage the system and vehicle. Have any leaks fixed right away.

The vehicle has several indicators to warn of engine overheating.

There is a coolant temperature gauge in the vehicle's instrument cluster. See *Engine Coolant Temperature Gauge* ⇨ *147*.

In addition, there are ENGINE OVERHEATED STOP ENGINE, ENGINE OVERHEATED IDLE ENGINE, and ENGINE POWER IS REDUCED messages in the Driver Information Center (DIC).

If the decision is made not to lift the hood when this warning appears, get service help right away. See *Roadside Assistance Program* ⇨ *441*.

If the decision is made to lift the hood, make sure the vehicle is parked on a level surface.

2.7L L4, 4.3L V6, 5.3L V8, and 6.2L V8 Engines

Check to see if the engine cooling fans are running. If the engine is overheating, the fans should be running. If they are not, do not continue to run the engine. Have the vehicle serviced.

If Steam is Coming from the Engine Compartment

⚠ Warning

Steam and scalding liquids from a hot cooling system are under pressure. Turning the pressure cap, even a little, can cause them to come out at high speed and you could be burned. Never turn the cap when the cooling system, including the pressure cap, is hot. Wait for the cooling system and pressure cap to cool.

If No Steam is Coming from the Engine Compartment

The ENGINE OVERHEATED STOP ENGINE or the ENGINE OVERHEATED IDLE ENGINE message, along with a low coolant condition, can indicate a serious problem.

The 2.7L engine will shut down automatically if the ENGINE OVERHEATED STOP ENGINE message displays.

If there is an engine overheat warning, but no steam is seen or heard, the problem may not be too serious. Sometimes the engine can get a little too hot when the vehicle:

- Climbs a long hill on a hot day.
- Stops after high-speed driving.
- Idles for long periods in traffic.
- Tows a trailer; see *Trailer Towing* ⇨ *285*.

If the ENGINE OVERHEATED STOP ENGINE or the ENGINE OVERHEATED IDLE ENGINE message appears with no sign of steam, try this for a minute or so:

1. Turn the air conditioning off.
2. Turn the heater on to the highest temperature and to the highest fan speed. Open the windows as necessary.

3. When it is safe to do so, pull off the road, shift to P (Park) or N (Neutral) and let the engine idle.

If the temperature overheat gauge is no longer in the overheat zone or an overheat warning no longer displays, the vehicle can be driven. Continue to drive the vehicle slowly for about 10 minutes. Keep a safe vehicle distance from the vehicle in front. If the warning does not come back on, continue to drive normally and have the cooling system checked for proper fill and function.

If the warning continues, pull over, stop, and park the vehicle right away.

If there is still no sign of steam and the vehicle is equipped with an engine driven cooling fan, push down the accelerator until the engine speed is about twice as fast as normal idle speed for at least five minutes while the vehicle is parked. If the warning is still there, turn off the engine and get everyone out of the vehicle until it cools down.

If there is no sign of steam, idle the engine for five minutes while parked. If the warning is still displayed, turn off the engine until it cools down.

Overheated Engine Protection Operating Mode

If an overheated engine condition exists and the ENGINE POWER IS REDUCED message displays, an overheat protection mode which alternates firing groups of cylinders helps to prevent engine damage. In this mode, a loss in power and engine performance will be noticed. This operating mode allows the vehicle to be driven to a safe place in an emergency. Driving extended distances and/or towing a trailer in the overheat protection mode should be avoided.

Caution

After driving in the overheated engine protection operating mode, the engine oil will be severely degraded. Any repairs performed before the engine is cool may cause engine damage. Allow the engine to cool before attempting any repair. Repair the cause of coolant loss, change the oil, and reset the oil life system. See *Engine Oil* ⇨ *325*.

Engine Fan

The vehicle has electric cooling fan(s). The fans may be heard spinning at low speed during most everyday driving. The fans may turn off if no cooling is required. Under heavy vehicle loading, trailer towing, high outside temperatures, or operation of the air conditioning system, the fans may change to high speed and an increase in fan noise may be heard. This is normal and indicates that the cooling system is functioning properly. The

fans will change to low speed when additional cooling is no longer required.

The electric engine cooling fans may run after the engine has been turned off. This is normal and no service is required.

Washer Fluid

What to Use

When windshield washer fluid needs to be added, be sure to read the manufacturer's instructions before use. Use a fluid that has sufficient protection against freezing in an area where the temperature may fall below freezing.

Adding Washer Fluid

The vehicle has a low washer fluid message on the DIC that comes on when the washer fluid is low. The message is displayed for 15 seconds at the start of each ignition cycle. When the WASHER FLUID LOW ADD FLUID message displays, washer fluid will need to be added to the windshield washer fluid reservoir.

Open the cap with the washer symbol on it. Add washer fluid until the tank is full. See *Engine Compartment Overview* ⇨ *320* for reservoir location.

Caution

- Do not use washer fluid that contains any type of water repellent coating. This can cause the wiper blades to chatter or skip.

(Continued)

Caution (Continued)

- Do not use engine coolant (antifreeze) in the windshield washer. It can damage the windshield washer system and paint.
- Do not mix water with ready-to-use washer fluid. Water can cause the solution to freeze and damage the washer fluid tank and other parts of the washer system.
- When using concentrated washer fluid, follow the manufacturer instructions for adding water.
- Fill the washer fluid tank only three-quarters full when it is very cold. This allows for fluid expansion if freezing occurs, which could damage the tank if it is completely full.

Brakes

Disc brake pads have built-in wear indicators that make a high-pitched warning sound when the brake pads are worn and new pads are needed. The sound can come and go or be heard all the time the vehicle is moving, except when applying the brake pedal firmly.

⚠ Warning

The brake wear warning sound means that soon the brakes will not work well. That could lead to a crash. When the brake wear warning sound is heard, have the vehicle serviced.

Caution

Continuing to drive with worn-out brake pads could result in costly brake repair.

Some driving conditions or climates can cause a brake squeal when the brakes are first applied or lightly applied. This does not mean something is wrong with the brakes.

Properly torqued wheel nuts are necessary to help prevent brake pulsation. When tires are rotated, inspect brake pads for wear and evenly tighten wheel nuts in the proper sequence to torque specifications in *Capacities and Specifications* ⇨ *434*.

Brake linings should always be replaced as complete axle sets.

Brake Pedal Travel

See your dealer if the brake pedal does not return to normal height, or if there is a rapid increase in pedal travel. This could be a sign that brake service may be required.

Replacing Brake System Parts

Always replace brake system parts with new, approved replacement parts. If this is not done, the brakes may not work properly. The braking performance expected can change in many other ways if the wrong replacement brake parts are installed or parts are improperly installed.

Brake Pad Life System

When to Change Brake Pads

This vehicle has a system that estimates the remaining life of the front and rear brake pads. Brake pad life is displayed in the Driver Information Center (DIC), along with a percentage for each axle. The system must be reset every time the brake pads are changed.

When the system has determined that the brake pads need to be replaced, a message will display, which may include mileage remaining.

Brake pads should always be replaced as complete axle sets.

How to Reset the Brake Pad Life System

The system will automatically detect when significantly worn brake pads are replaced. When the ignition is

turned on after new pads and wear sensors are installed, a message will display. Follow the prompts to reset the system.

The brake pad life system can also be manually reset:

1. Display Brake Pad Life on the DIC. See *Driver Information Center (DIC) (Midlevel and Uplevel)* ⇨ *162* or *Driver Information Center (DIC) (Base Level)* ⇨ *161*.
2. Press the thumbwheel or the trip odometer reset stem if the vehicle does not have DIC buttons. Select front or rear pads as appropriate.
3. Select YES on the confirmation message, or press the trip odometer reset stem on a base level DIC. Repeat for pads on the other axle if they were also replaced.

How to Disable the Brake Pad Life System

The brake pad life system can be turned off. This may be necessary if aftermarket brake pads without wear sensors are installed. When the system is turned off, the front and rear brake pad life percentages will not display. However, the built-in wear indicators that make a high-pitched warning sound when the brake pads are worn can still determine when the pads should be replaced. See *Brakes* ⇨ *339*.

To turn off the brake pad life system:

1. Display Brake Pad Life on the DIC. See *Driver Information Center (DIC) (Midlevel and Uplevel)* ⇨ *162* or *Driver Information Center (DIC) (Base Level)* ⇨ *161*.
2. Select DISABLE.

To turn the brake pad life system back on, follow the above steps but select ENABLE in Step 2.

Brake Fluid

The brake master cylinder reservoir is filled with GM approved DOT 4 brake fluid as indicated on the reservoir cap. See *Engine Compartment Overview* ⇨ *320* for the location of the reservoir.

Checking Brake Fluid

With the vehicle in P (Park) on a level surface, the brake fluid level should be between the minimum and maximum marks on the brake fluid reservoir.

There are only two reasons why the brake fluid level in the reservoir may go down:

- Normal brake lining wear. When new linings are installed, the fluid level goes back up.

- A fluid leak in the brake hydraulic system. Have the brake hydraulic system fixed. With a leak, the brakes will not work well.

Always clean the brake fluid reservoir cap and the area around the cap before removing it.

Do not top off the brake fluid. Adding fluid does not correct a leak. If fluid is added when the linings are worn, there will be too much fluid when new brake linings are installed. Add or remove fluid, as necessary, only when work is done on the brake hydraulic system.

⚠ Warning

If too much brake fluid is added, it can spill on the engine and burn, if the engine is hot enough. You or others could be burned, and the vehicle could be damaged. Add brake fluid only when work is done on the brake hydraulic system.

When the brake fluid falls to a low level, the brake warning light comes on. See *Brake System Warning Light* ⇨ *153*.

Brake fluid absorbs water over time which degrades the effectiveness of the brake fluid. Replace brake fluid at the specified intervals to prevent increased stopping distance. See *Maintenance Schedule* ⇨ *419*.

What to Add

Use only GM approved DOT 4 brake fluid from a clean, sealed container. See *Recommended Fluids and Lubricants* ⇨ *429*.

⚠ Warning

The wrong or contaminated brake fluid could result in damage to the brake system. This could result in the loss of braking leading to a possible injury. Always use the proper GM approved brake fluid.

Caution

If brake fluid is spilled on the vehicle's painted surfaces, the paint finish can be damaged. Immediately wash off any painted surface.

Battery - North America

The original equipment battery is maintenance free. Do not remove the cap and do not add fluid.

Refer to the replacement number shown on the original battery label when a new battery is needed. See *Engine Compartment Overview* ⇨ *320* for battery location.

Stop/Start System

Vehicles equipped with a 2.7L L3B, 3.0L LM2, 5.3L L84 or 6.2L L87 are equipped with a Stop/Start system to shut off the engine to help conserve fuel. See *Stop/Start System* ⇨ *224*.

Vehicles with the Stop/Start system have an Absorbed Glass Mat (AGM) 12-volt battery. Installation of a standard 12-volt battery will result in reduced 12-volt battery life. When using a 12-volt battery charger on the 12-volt AGM battery, some chargers have an AGM battery setting on the charger. If available, use the AGM setting on the charger to limit charge voltage to 14.8 volts. Follow the charger manufacturer's instructions.

⚠ Warning

WARNING: Battery posts, terminals, and related accessories contain lead and lead compounds, chemicals known to the State of California to cause cancer and birth defects or other reproductive harm. Batteries also contain other chemicals known to the State of California to cause cancer. **WASH HANDS AFTER HANDLING.** For more information go to www.P65Warnings.ca.gov/passenger-vehicle.

See *California Proposition 65 Warning* ⇨ *317* and the back cover.

Vehicle Storage

⚠ Warning

Batteries have acid that can burn you and gas that can explode. You can be badly hurt if you are not careful. See *Jump Starting - North America* ⇨ *399* for tips on working around a battery without getting hurt.

Infrequent Usage: Remove the black, negative (−) cable from the battery to keep the battery from running down.

Extended Storage: Remove the black, negative (−) cable from the battery or use a battery trickle charger.

Negative Battery Cable Disconnection

⚠ Warning

Before disconnecting the negative battery cable, turn off all features, turn the ignition off, and remove the key, if equipped, from the vehicle. If this is not done, you or others could be injured, and the vehicle could be damaged.

Caution

If the battery is disconnected with the ignition on or the vehicle in Retained Accessory Power (RAP), the OnStar back-up battery will be permanently discharged and will need to be replaced.

1. Make sure the lamps, features, and accessories are turned off.
2. Turn the ignition off and remove the key, if equipped.

For vehicles equipped with the Stop/Start system:

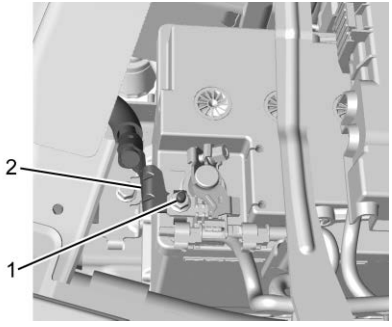

1. Loosen and remove the negative battery cable nut (1) at the battery sensor connection.
2. Remove the negative battery cable (2) from the battery sensor stud.
3. Cover the negative battery cable terminal, battery sensor stud, and negative battery post with a non-conductive material to prevent any contact with the negative battery cable.

For vehicles not equipped with the Stop/Start system:

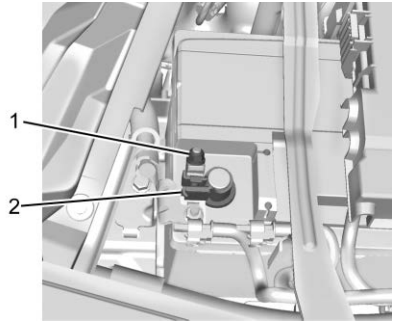

1. Loosen the negative battery cable nut (1).
2. Remove the negative battery cable clamp (2) from the negative battery post.
3. Cover the negative battery cable clamp, and negative battery post with a non-conductive material to prevent any contact with the negative battery cable.

Negative Battery Cable Reconnection

Caution

When reconnecting the battery:

- Use the original nut from the vehicle to secure the negative battery cable. Do not use a different nut. If you need a replacement nut, see your dealer.
- Tighten the nut with a hand tool. Do not use an impact wrench or power tools to tighten the nut.

The vehicle could be damaged if these guidelines are not followed.

Caution

Do not use paints, lubricants, or corrosion inhibitors on the nut that secures the negative battery cable to the vehicle. This could damage the vehicle.

For vehicles equipped with the Stop/Start system:

1. Install the negative battery cable to the battery sensor stud.
2. Install the negative battery cable nut to the battery sensor stud and tighten.
3. Turn the ignition on.

For vehicles not equipped with the Stop/Start system:

1. Install the negative battery cable clamp to the negative battery post.
2. Tighten the negative battery cable nut.
3. Turn the ignition on.

Four-Wheel Drive

Transfer Case

When to Check Lubricant

Refer to *Maintenance Schedule* ⇨ *419* to determine when to check the lubricant.

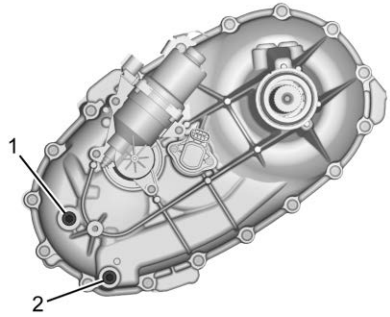

1. Fill Plug
2. Drain Plug

To get an accurate reading, the vehicle should be on a level surface.

If the level is below the bottom of the fill plug (1) hole, located on the transfer case, some lubricant will need to be added. Add enough lubricant to raise the level to the bottom of the fill plug (1) hole. Use care not to overtighten the plug.

When to Change Lubricant

Refer to *Maintenance Schedule* ⇨ *419* to determine how often to change the lubricant.

What to Use

Refer to *Recommended Fluids and Lubricants* ⇨ *429* to determine what kind of lubricant to use.

Front Axle

When to Check and Change Lubricant

It is not necessary to regularly check front axle fluid unless a leak is suspected, or an unusual noise is heard. A fluid loss could indicate a problem. Have it inspected and repaired.

How to Check Lubricant

To get an accurate reading, the vehicle should be on a level surface.

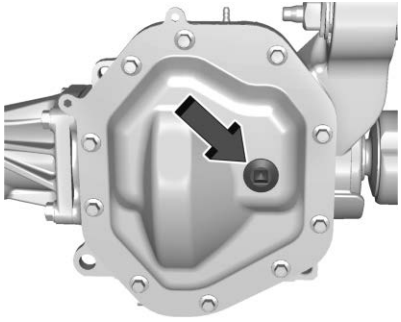

- When the differential is cold, add enough lubricant to raise the level from 0 mm (0 in) to 3.2 mm (1/8 in) below the fill plug hole.
- When the differential is at operating temperature (warm), add enough lubricant to raise the level to the bottom of the fill plug hole.

What to Use

Refer to *Recommended Fluids and Lubricants* ⇨ *429* to determine what kind of lubricant to use.

Rear Axle

When to Check Lubricant

It is not necessary to regularly check rear axle fluid unless a leak is suspected or an unusual noise is heard. A fluid loss could indicate a problem. Have it inspected and repaired.

All axle assemblies are filled by volume of fluid during production. They are not filled to reach a certain level. When checking the fluid level on any axle, variations in the readings can be caused by factory fill differences between the minimum and the maximum fluid volume. Also, if a vehicle has just been driven before checking the fluid level, it may appear lower than normal because fluid has traveled out along the axle tubes and has not drained back to the sump area. Therefore, a reading taken five minutes after the vehicle has been driven will appear to have a lower fluid level than a vehicle that has been stationary for an hour or two. The rear axle assembly must be supported on a flat, level surface to get a true reading.

How to Check Lubricant

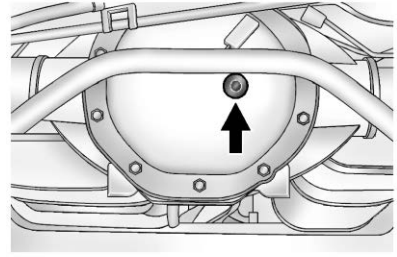

To get an accurate reading, the vehicle should be on a level surface.

- For the 2.7L, 4.3L, and 5.3L engines, the proper level is 1.0 mm to 19.0 mm (0.04 in to 0.7 in) below the bottom of the fill hole, located on the rear axle. Add only enough fluid to reach the proper level.

- For the 6.2L engine, the proper level is from 15 mm to 40 mm (0.6 in to 1.6 in) below the bottom of the fill plug hole, located on the rear axle. Add only enough fluid to reach the proper level.

What to Use

Refer to *Recommended Fluids and Lubricants* ⇨ *429* to determine what kind of lubricant to use.

Noise Control System

Noise Emissions Warranty

General Motors warrants to the first person who purchases this vehicle for purposes other than resale and to each subsequent purchaser that this vehicle as manufactured by General Motors, was designed, built and equipped to conform at the time it left General Motors's control with all applicable U.S. EPA Noise Control Regulations. This warranty covers this vehicle as designed, built and equipped by General Motors, and is not limited to any particular part, component or system of the vehicle manufactured by General Motors. Defects in design, assembly or in any part, component or system of the vehicle as manufactured by General Motors, which, at the time it left General Motors's control, caused noise emissions to exceed Federal standards, are covered by this warranty for the life of the vehicle.

The following information relates to compliance with federal noise emission standards for vehicles with a Gross Vehicle Weight Rating (GVWR) of more than 4 536 kg (10,000 lb). The Maintenance Schedule provides information on maintaining the noise control system to minimize degradation of the noise emission control system during the life of the vehicle. The noise control system warranty is given in the warranty manual.

These standards apply only to vehicles sold in the United States.

TAMPERING WITH NOISE CONTROL SYSTEM PROHIBITED

Federal law prohibits the following acts or the causing thereof:

1. The removal or rendering inoperative by any person, other than for purposes of maintenance, repair, or replacement, of any device or element of design incorporated into any new vehicle for the purpose of noise control prior to its sale or delivery to the ultimate purchaser or while it is in use; or
2. The use of the vehicle after such device or element of design has been removed or rendered inoperative by any person.

Among those acts presumed to constitute tampering are the acts listed below.

Insulation:

Removal of the noise shields or any underhood insulation.

Engine:

Removal or rendering the engine speed governor, if equipped, inoperative so as to allow engine speed to exceed manufacturer specifications.

Fan and Drive:

- Removal of the fan clutch, if equipped, or rendering the clutch inoperative.
- Removal of the fan shroud, if equipped.

Air Intake:

- Removal of the air cleaner silencer.
- Modification of the air cleaner.

Exhaust:

- Removal of the muffler and/or resonator.
- Removal of the exhaust pipes and exhaust pipe clamps.

Starter Switch Check

⚠ Warning

When you are doing this inspection, the vehicle could move suddenly. If the vehicle moves, you or others could be injured.

1. Before starting this check, be sure there is enough room around the vehicle.
2. Apply both the parking brake and the regular brake.

   Do not use the accelerator pedal, and be ready to turn off the engine immediately if it starts.
3. Try to start the engine in each gear. The vehicle should start only in P (Park) or N (Neutral). If the vehicle starts in any other position, contact your dealer for service.

Ignition Transmission Lock Check

If equipped with Key Access ignition, while parked, and with the parking brake set, try to turn the ignition off in each shift lever position. The ignition should turn to off only when the shift lever is in P (Park).

The ignition key should come out only when the ignition is off. Contact your dealer if service is required.

Park Brake and P (Park) Mechanism Check

⚠ Warning

When you are doing this check, the vehicle could begin to move. You or others could be injured and property could be damaged. Make sure there is room in front of the vehicle in case it begins to roll. Be ready to apply the regular brake at once should the vehicle begin to move.

Park on a fairly steep hill, with the vehicle facing downhill. Keeping your foot on the regular brake, set the parking brake.

- To check the parking brake's holding ability: With the engine running and the transmission in N (Neutral), slowly remove foot pressure from the regular brake pedal. Do this until the vehicle is held by the parking brake only.
- To check the P (Park) mechanism's holding ability: With the engine running, shift to P (Park). Then release the parking brake followed by the regular brake.

Contact your dealer if service is required.

Wiper Blade Replacement

Windshield wiper blades should be replaced periodically. See *Maintenance Schedule* ⇨ *419*.

Replacement blades come in different types and are removed in different ways. For proper type and length, see *Maintenance Replacement Parts* ⇨ *431*.

Caution
Allowing the wiper arm to touch the windshield when no wiper blade is installed could damage the windshield. Any damage that occurs would not be covered by the vehicle warranty. Do not allow the wiper arm to touch the windshield.

Front Wiper Blade Replacement

To replace the wiper blade:

1. Pull the wiper assembly away from the windshield.

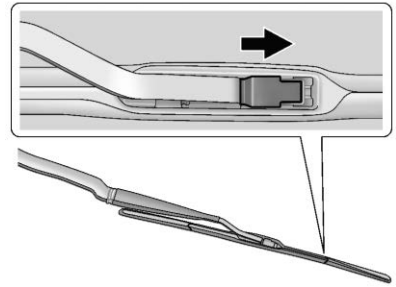

2. Lift up on the latch in the middle of the wiper blade where the wiper arm attaches.
3. With the latch open, pull the wiper blade down toward the windshield far enough to release it from the J-hooked end of the wiper arm.
4. Remove the wiper blade.
5. Reverse Steps 1–3 for wiper blade replacement.

Windshield Replacement

HUD System

The windshield is part of the HUD system. If the windshield must be replaced, get one that is designed for HUD or the HUD image may look out of focus.

Driver Assistance Systems

If the windshield needs to be replaced and the vehicle is equipped with a front camera sensor for the Driver Assistance Systems, a GM replacement windshield is recommended. The replacement windshield must be installed according to GM specifications for proper alignment. If it is not, these systems may not work properly, they may display messages, or they may not work at all. See your dealer for proper windshield replacement.

Gas Strut(s)

This vehicle is equipped with gas strut(s) to provide assistance in lifting and holding open the hood/trunk/liftgate system in full open position.

⚠ Warning

If the gas struts that hold open the hood, trunk, and/or liftgate fail, you or others could be seriously injured. Take the vehicle to your dealer for service immediately. Visually inspect the gas struts for signs of wear, cracks, or other damage periodically. Check to make sure the hood/trunk/liftgate is held open with enough force. If struts are failing to hold the hood/trunk/liftgate, do not operate. Have the vehicle serviced.

Caution

Do not apply tape or hang any objects from gas struts. Also do not push down or pull on gas struts. This may cause damage to the vehicle.

See *Maintenance Schedule* ⇨ *419*.

Hood

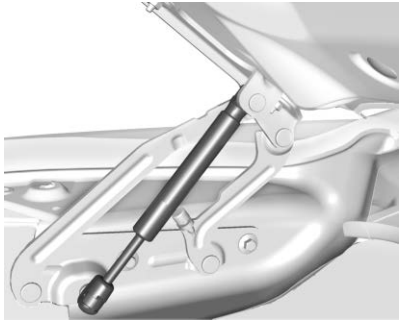

Trunk

Liftgate

Headlamp Aiming

Headlamp aim has been preset and should need no further adjustment.

If the vehicle is damaged in a crash, the headlamp aim may be affected. If adjustment to the headlamps is necessary, see your dealer.

Bulb Replacement

For the proper type of replacement bulbs, or any bulb changing procedure not listed in this section, contact your dealer.

Caution

Do not replace incandescent bulbs with aftermarket LED replacement bulbs. This can cause damage to the vehicle electrical system.

Halogen Bulbs

⚠ Warning

Halogen bulbs have pressurized gas inside and can burst if you drop or scratch the bulb. You or others could be injured. Be sure to read and follow the instructions on the bulb package.

LED Lighting

This vehicle has several LED lamps. For replacement of any LED lighting assembly, contact your dealer.

Headlamps, Front Turn Signal, Sidemarker, and Parking Lamps

Base Level Headlamp Assembly

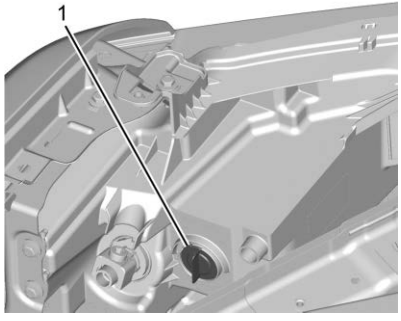

1. Turn Signal Lamps

Headlamp Replacement

See your dealer for headlamp replacement.

Turn Signal Lamp Replacement

Base Level

1. Open the hood.
2. Turn the bulb socket counterclockwise to remove it from the headlamp assembly and pull it straight out.
3. Remove the bulb by pulling it straight out of the bulb socket.
4. Replace the bulb and reverse Steps 1–3 to reinstall.

Uplevel

See your dealer for headlamp replacement.

Taillamps, Turn Signal, Stoplamps, and Back-Up Lamps

Base Level Taillamp Assembly

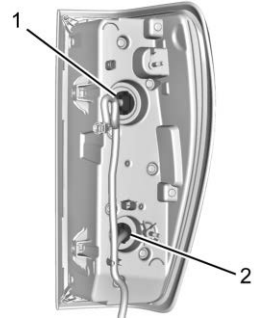

1. Stoplamp/Turn Signal Lamp
2. Back-Up Lamp

Uplevel Taillamp Assembly

See your dealer for taillamp replacement.

It is recommended to replace the grommets when replacing a bulb. See your dealer.

To replace one of these bulbs:

1. Open the tailgate.

2. Remove the two rear lamp assembly screws.

4. Pull the rear lamp assembly outward and rearward away from the box side to remove it from the vehicle.
5. Turn the bulb socket counterclockwise.
6. Pull the bulb straight out from the socket.
7. Replace the bulb and reverse Steps 1–5 to reinstall.

Center High-Mounted Stoplamp (CHMSL) and Cargo Lamp

This procedure is for the regular cab only. For crew cab and double cab see your dealer.

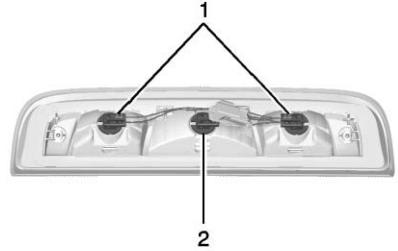

1. Cargo Lamp Bulbs
2. Center High-Mounted Stoplamp (CHMSL) Bulb

To replace one of these bulbs:

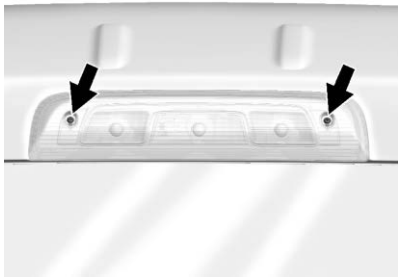

1. Remove the two screws and lift off the lamp assembly.
2. Turn the bulb socket counterclockwise and pull it straight out.
3. Pull the bulb straight out from the socket.

License Plate Lamp

To replace the bulb:

1. Reach behind the rear bumper and locate the bulb.
2. Turn the bulb socket counterclockwise and pull the bulb straight out of the socket.

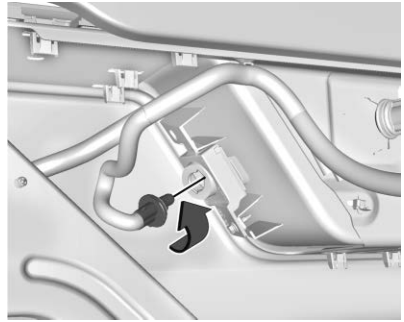

3. Replace the bulb and reverse Step 2 to reinstall.

Electrical System

Electrical System Overload

The vehicle has fuses to protect against an electrical system overload. Fuses also protect power devices in the vehicle.

Replace a bad fuse with a new one of the identical size and rating.

If there is a problem on the road and a fuse needs to be replaced, there are some spare fuses and a fuse puller in the left instrument panel fuse block. The same amperage fuse can also be borrowed. Choose some feature of the vehicle that is not needed to use and replace it as soon as possible.

Headlamp Wiring

An electrical overload may cause the lamps to go on and off, or in some cases to remain off. Have the headlamp wiring checked right away if the lamps go on and off or remain off.

Windshield Wipers

If the wiper motor overheats due to heavy snow or ice, the windshield wipers will stop until the motor cools and will then restart.

Although the circuit is protected from electrical overload, overload due to heavy snow or ice may cause wiper linkage damage. Always clear ice and heavy snow from the windshield before using the windshield wipers.

If the overload is caused by an electrical problem and not snow or ice, be sure to get it fixed.

Fuses and Circuit Breakers

The wiring circuits in the vehicle are protected from short circuits by a combination of fuses and circuit breakers. This greatly reduces the chance of damage caused by electrical problems.

⚠ Danger

Fuses and circuit breakers are marked with their ampere rating. Do not exceed the specified amperage rating when replacing fuses and circuit breakers. Use of an oversized fuse or circuit breaker can result in a vehicle fire. You and others could be seriously injured or killed.

To check a fuse, look at the silver-colored band inside the fuse. If the band is broken or melted, replace the fuse. Be sure to replace a bad fuse with a new one of the identical size and rating.

Fuses of the same amperage can be temporarily borrowed from another fuse location, if a fuse goes out. Replace the fuse as soon as possible.

Engine Compartment Fuse Block

If the vehicle has a diesel engine, see the Duramax diesel supplement.

The engine compartment fuse block is in the engine compartment, on the passenger side of the vehicle.

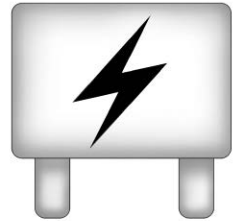

Lift the cover to access the fuse block.

Caution

Spilling liquid on any electrical component on the vehicle may damage it. Always keep the covers on any electrical component.

A fuse puller is available in the left instrument panel end cap.

The vehicle may not be equipped with all of the fuses, relays, and features shown.

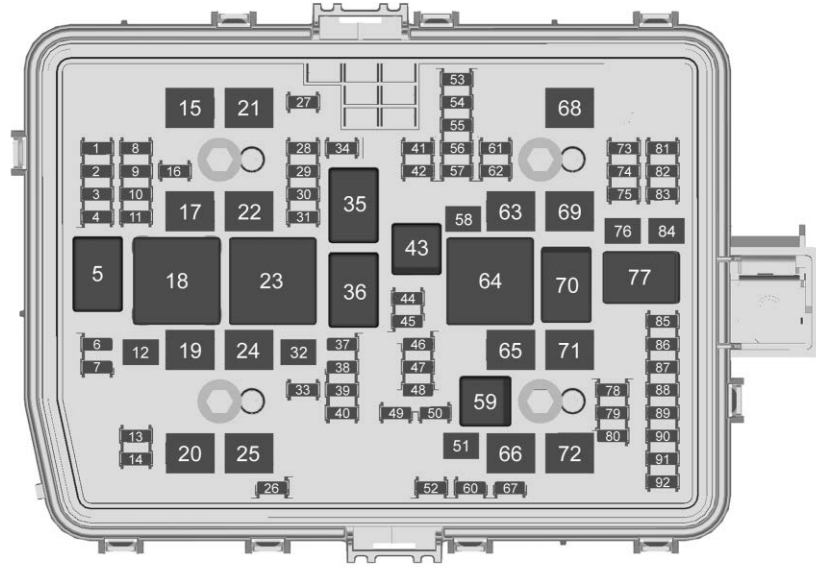

Fuses	Usage
1	High-beam left

Fuses	Usage
2	High-beam right
3	Headlamp left

Fuses	Usage
4	Headlamp right
6	TIM
7	–
8	Fog lamp
9	VKM
10	–
11	Police upfitter
12	–
13	Washer front
14	Washer rear
15	MSB driver
16	–
17	IECL 1
19	DC/AC inverter
20	IECR 2
21	MSB pass
22	IECL 2
24	Electric brake booster 1
25	REC
26	–
27	Horn
28	–
29	–
30	–
31	–
32	Rear window defogger
33	Heated mirror
34	Parking lamp left
37	Euro trailer
38	TIM
39	–
40	Misc ignition
41	Trailer parking lamp
42	Park lamp right
44	–
45	Second fuel pump
46	Engine control module ignition
47	Transmission control module ignition
48	–
49	Transmission control module
50	A/C clutch
51	Transfer case control module
52	Front wiper
53	Center high-mounted stop lamp
54	Trailer reverse lamp
55	Trailer back-up lamp
56	SADS
57	TTPM
58	Starter motor
60	Active fuel management 1

Fuses	Usage
61	VES
62	Integrated chassis control module/CVS
63	Trailer battery
65	Auxiliary underhood electrical center
66	Cooling fan motor left
67	Active fuel management 2
68	–
69	Starter pinion
71	Cooling fan
72	Cooling fan right
73	Trailer stop/turn lamp left
74	TIM
75	DEFC
76	Electric RNG BDS

Fuses	Usage
78	Engine control module
79	Auxiliary battery
80	Cabin cooling pump
81	Trailer stop/turn lamp right
82	TIM
83	FTZM
84	Trailer brake
85	ENG
86	Engine control module
87	Injector B even
88	O2 B sensor
89	O2 A sensor
90	Injector A odd
91	Engine control module throttle control
92	Cool fan clutch

Relays	Usage
5	Headlamp
18	DC/AC inverter
23	Rear window defogger
35	Parking lamp
36	Run/Crank
43	Second fuel pump
59	A/C clutch
64	Starter motor
70	Starter pinion
77	Powertrain

Instrument Panel Fuse Block (Right)

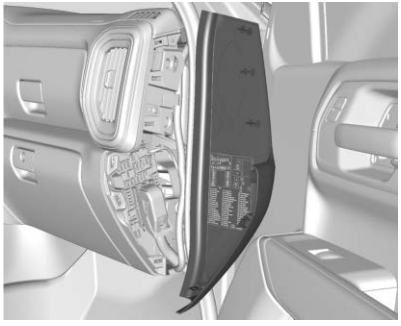

The right instrument panel fuse block access door is on the passenger side edge of the instrument panel.

Pull off the cover to access the front of the fuse block.

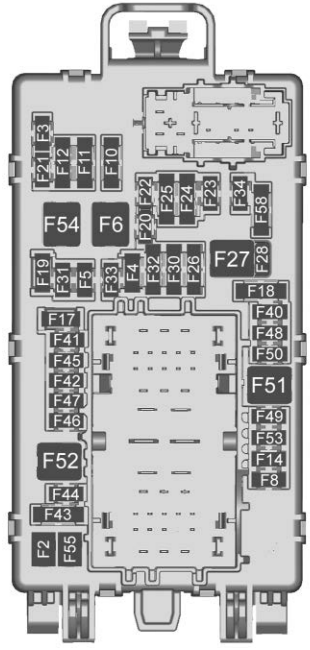

To access the back of the fuse block:

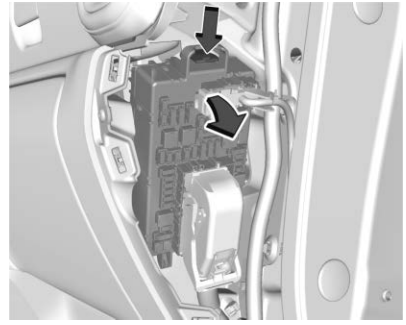

1. Push the tab at the top of fuse block down.
2. Pull the top of the fuse block outward.
3. Reverse Steps 1–2 to reinstall.

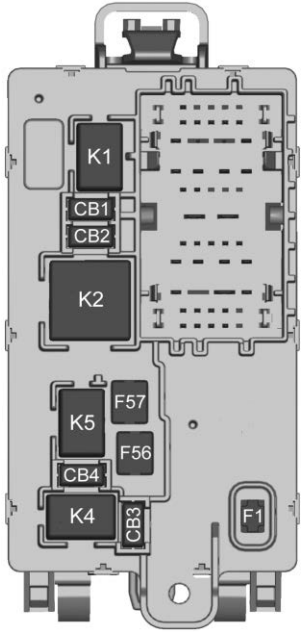

Back

The vehicle may not be equipped with all of the fuses, relays, and features shown.

Fuses	Usage
F1	Right doors
F2	Left doors
F3	Universal remote system
F4	–
F5	–
F6	Front blower
F8	Lumbar switch
F10	Body control module 6/Body control module 7
F11	Seat/CLM
F12	Body control module 3/Body control module 5
F14	Mirrors/Windows module
F17	Steering wheel controls
F18	VPM/OBS DET
F19	DLIS
F20	Cooled seats
F21	NOT R/C
F22	Heated steering wheel
F23	MISC R/C
F24	Instrument panel cluster ignition/ Overhead
F25	Heating, ventilation, and air conditioning ignition/Heating, ventilation, and air conditioning auxiliary
F26	USB ports/Special equipment option retained accessory power
F27	Accessory power outlet/retained accessory power
F28	Accessory power outlet/Battery

Fuses	Usage
F30	Sensing and diagnostic module/ Parking brake
F31	Body control module 4
F32	Special equipment option/Data link connection
F33	Body control module 8
F34	Cargo lamp
F40	CGM
F41	Infotainment 1
F42	TCP
F43	–
F44	AVM
F45	Body control module 2
F46	Heating, ventilation, and air conditioning/ Battery 1
F47	Instrument panel cluster/Battery
F48	Transmission control module

Fuses	Usage
F49	Body control module 1
F50	–
F51	Battery 1
F52	Battery 2
F53	–
F54	Sunroof
F55	Driver power seat
F56	DC DC TRANS 1
F57	DC DC TRANS 2
F58	Infotainment 2

Circuit Breakers	Usage
1	Accessory power outlet 2
2	Accessory power outlet 1/Cigarette Lighter
3	Accessory power outlet 3
4	Accessory power outlet 4

Relays	Usage
K1	Run/Crank
K2	Retained accessory power/Accessory 1
K4	Retained accessory power/Accessory 2
K5	–

Instrument Panel Fuse Block (Left)

The left instrument panel fuse block access door is on the driver side edge of the instrument panel.

The vehicle may not be equipped with all of the fuses, relays, and features shown.

Pull off the cover to access the fuse block.

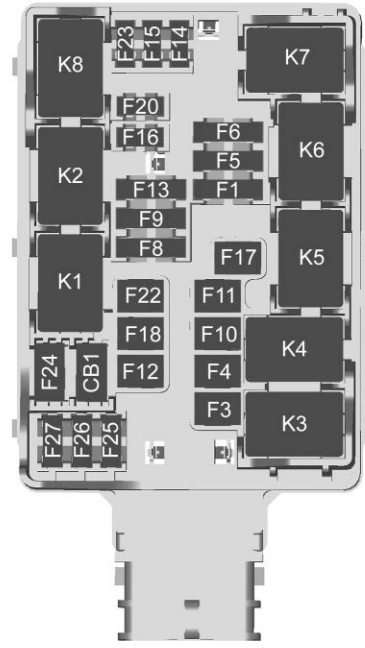

The vehicle may not be equipped with all of the fuses, relays, and features shown.

Fuses	Usage
F1	Rear heated seats left/right
F3	Euro trailer
F4	–
F5	Front Bolster
F6	Heated and cooled seats left/right
F8	Rear seat entertainment/Theft deterrent
F9	Passive entry/Passive start/Driver seat module
F10	–
F11	Sunshade
F12	Passenger power seat
F13	Export power take off/ Special equipment option 1
F14	–
F15	–
F16	AMP

Fuses	Usage
F17	MFEG
F18	–
F20	Endgate
F22	Rear sliding window
F23	–
F24	–
F25	–
F26	–
F27	–

Circuit Breakers	Usage
CB1	–

Relays	Usage
K1	Rear sliding window open
K2	Rear sliding window close
K3	MFEG major 1
K4	MFEG minor 1
K5	MFEG minor 2
K6	MFEG major 2
K7	Anti-theft
K8	–

Wheels and Tires

Tires

Every new GM vehicle has high-quality tires made by a leading tire manufacturer. See the warranty manual for information regarding the tire warranty and where to get service. For additional information refer to the tire manufacturer.

⚠ Warning

- Poorly maintained and improperly used tires are dangerous.
- Overloading the tires can cause overheating as a result of too much flexing. There could be a blowout and a serious crash. See *Vehicle Load Limits* ⇨ *211*.

(Continued)

Warning (Continued)

- Underinflated tires pose the same danger as overloaded tires. The resulting crash could cause serious injury. Check all tires frequently to maintain the recommended pressure. Tire pressure should be checked when the tires are cold.
- Overinflated tires are more likely to be cut, punctured, or broken by a sudden impact — such as when hitting a pothole. Keep tires at the recommended pressure.
- Worn or old tires can cause a crash. If the tread is badly worn, replace them.

(Continued)

Warning (Continued)

- Replace any tires that have been damaged by impacts with potholes, curbs, etc.
- Improperly repaired tires can cause a crash. Only the dealer or an authorized tire service center should repair, replace, dismount, and mount the tires.
- Do not spin the tires in excess of 56 km/h (35 mph) on slippery surfaces such as snow, mud, ice, etc. Excessive spinning may cause the tires to explode.

All-Season Tires

This vehicle may come with all-season tires. These tires are designed to provide good overall performance on most road surfaces and weather conditions. Original equipment tires designed to GM's specific tire performance criteria have a TPC specification code molded onto the sidewall. Original equipment all-season tires can be identified by the last two characters of this TPC code, which will be “MS.”

Consider installing winter tires on the vehicle if frequent driving on snow or ice-covered roads is expected. All-season tires provide adequate performance for most winter driving conditions, but they may not offer the same level of traction or performance as winter tires on snow or ice-covered roads. See *Winter Tires* ⇨ *363*.

Winter Tires

This vehicle was not originally equipped with winter tires. Winter tires are designed for increased traction on snow and ice-covered roads. Consider installing winter tires on the vehicle if frequent driving on ice or snow covered

roads is expected. See your dealer for details regarding winter tire availability and proper tire selection. Also, see *Buying New Tires* ⇨ *382*.

With winter tires, there may be decreased dry road traction, increased road noise, and shorter tread life. After changing to winter tires, be alert for changes in vehicle handling and braking.

If using winter tires:

- Use tires of the same brand and tread type on all four wheel positions.
- Use only radial ply tires of the same size, load range, and speed rating as the original equipment tires.

Winter tires with the same speed rating as the original equipment tires may not be available for H, V, W, Y, and ZR speed rated tires. If winter tires with a lower speed rating are chosen, never exceed the tire's maximum speed capability.

Low-Profile Tires

If the vehicle has 275/60R20 or 275/50R22 size tires, they are classified as low-profile tires.

Caution

Low-profile tires are more susceptible to damage from road hazards or curb impact than standard profile tires. Tire and/or wheel assembly damage can occur when coming into contact with road hazards like potholes, or sharp edged objects, or when sliding into a curb. The warranty does not cover this type of damage. Keep tires set to the correct inflation pressure and when possible, avoid contact with curbs, potholes, and other road hazards.

All-Terrain Tires

This vehicle may have all-terrain tires. These tires provide good performance on most road surfaces, weather conditions, and for off-road driving. See *Off-Road Driving* ⇨ *202*.

The tread pattern on these tires may wear more quickly than other tires. Consider rotating the tires more frequently than at 12 000 km (7,500 mi) intervals if irregular wear is noted when the tires are inspected. See *Tire Inspection* ⇨ *379*.

Tire Sidewall Labeling

Useful information about a tire is molded into the sidewall. The examples show a typical passenger and light truck tire sidewall.

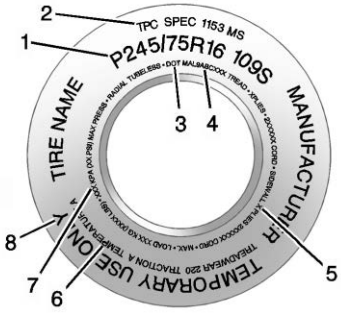

Passenger (P-Metric)/Spare Tire

(1) Tire Size : The tire size code is a combination of letters and numbers used to define a particular tire's width, height, aspect ratio, construction type, and service description. See the “Tire Size” illustration later in this section for more detail.

(2) TPC Spec (Tire Performance Criteria Specification) : Original equipment tires designed to GM's specific tire performance criteria have a TPC specification code molded onto the sidewall. GM's TPC specifications meet or exceed all federal safety guidelines.

(3) DOT (Department of Transportation) : The Department of Transportation (DOT) code indicates that the tire is in compliance with the U.S. Department of Transportation Motor Vehicle Safety Standards.

DOT Tire Date of Manufacture : The last four digits of the TIN indicate the tire manufactured date. The first two digits represent the week (01-52) and the last two digits, the year. For example, the third week of the year 2010 would have a four-digit DOT date of 0310.

(4) Tire Identification Number (TIN) : The letters and numbers following the DOT code are the Tire Identification Number (TIN). The TIN shows the manufacturer and plant code, tire size, and date the tire was manufactured. The TIN is molded onto both sides of the tire, although only one side may have the date of manufacture.

(5) Tire Ply Material : The type of cord and number of plies in the sidewall and under the tread.

(6) Uniform Tire Quality Grading (UTQG) : Tire manufacturers are required to grade tires based on three performance factors: treadwear, traction, and temperature resistance. For more information, see *Uniform Tire Quality Grading* ⇨ *384*.

(7) Maximum Cold Inflation Load Limit : Maximum load that can be carried and the maximum pressure needed to support that load. For information on recommended tire pressure see *Tire Pressure* ⇨ *371* and *Vehicle Load Limits* ⇨ *211*.

(8) Temporary Use Only : Only use a temporary spare tire until the road tire is repaired and replaced. This spare tire should not be driven on over 112 km/h (70 mph), or 88 km/h (55 mph) when pulling a trailer, with the proper inflation pressure. See *Full-Size Spare Tire* ⇨ *398*.

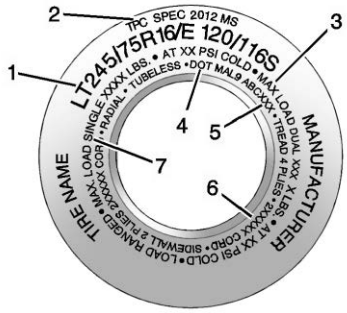
TPC SPEC 2012 MS
LT245/75R16/E 120/116S
MAX LOAD DUAL XXX LBS • TREAD 4 PLIES • AT XX PSI COLD • SIDEWALL 2 PLIES
MANUFACTURER
MAX LOAD SINGLE XXXX LBS • AT XX PSI COLD • LOAD RANGE D • TUBELESS • DOT MA9 ABCXX • RADIAL • TUBELESS • DOT MA9 ABCXX • RADIAL • TUBELESS • DOT MA9 ABCXX • RADIAL

(01-52) and the last two digits, the year. For example, the third week of the year 2010 would have a four-digit DOT date of 0310.

(5) Tire Identification Number (TIN) : The letters and numbers following the DOT code are the Tire Identification Number (TIN). The TIN shows the manufacturer and plant code, tire size, and date the tire was manufactured. The TIN is molded onto both sides of the tire, although only one side may have the date of manufacture.

(6) Tire Ply Material : The type of cord and number of plies in the sidewall and under the tread.

(7) Single Tire Maximum Load : Maximum load that can be carried and the maximum pressure needed to support that load when used as a single. For information on recommended tire pressure see *Tire Pressure* ⇨ *371* and *Vehicle Load Limits* ⇨ *211*.

Tire Designations

Tire Size

The examples show a typical passenger vehicle and light truck tire size.

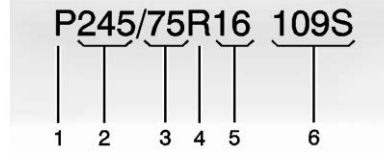

Passenger (P-Metric) Tire

(1) Passenger (P-Metric) Tire : The United States version of a metric tire sizing system. The letter P as the first character in the tire size means a passenger vehicle tire engineered to standards set by the U.S. Tire and Rim Association.

(2) Tire Width : The three-digit number indicates the tire section width in millimeters from sidewall to sidewall.

(3) Aspect Ratio : A two-digit number that indicates the tire height-to-width measurements. For example, if the tire size aspect ratio is 75, as shown in item C of the tire illustration, it would mean that the tire's sidewall is 75 percent as high as it is wide.

(4) Construction Code : A letter code is used to indicate the type of ply construction in the tire. The letter R means radial ply construction; the letter D means diagonal or bias ply construction; and the letter B means belted-bias ply construction.

(5) Rim Diameter : Diameter of the wheel in inches.

(6) Service Description : These characters represent the load index and speed rating of the tire. The load index represents the load carrying capacity a tire is certified to carry. The speed rating is the maximum speed a tire is certified to carry a load.

Light Truck (LT-Metric) Tire

(1) Light Truck (LT-Metric) Tire : The United States version of a metric tire sizing system. The letters LT as the first two characters in the tire size mean a light truck tire engineered to standards set by the U.S. Tire and Rim Association.

(2) Tire Width : The three-digit number indicates the tire section width in millimeters from sidewall to sidewall.

(3) Aspect Ratio : A two-digit number that indicates the tire height-to-width measurements. For example, if the tire size aspect ratio is 75, as shown in item 3 of the light truck (LT-Metric) tire illustration, it would mean that the tire's sidewall is 75 percent as high as it is wide.

(4) Construction Code : A letter code is used to indicate the type of ply construction in the tire. The letter R means radial ply construction; the letter D means diagonal or bias ply construction; and the letter B means belted-bias ply construction.

(5) Rim Diameter : Diameter of the wheel in inches.

(6) Load Range : Load Range.

(7) Service Description : The service description indicates the load index and speed rating of a tire. If two numbers are given as in the example, 120/116, then this represents the load index for single versus dual wheel usage (single/dual). The speed rating is the maximum speed a tire is certified to carry a load.

Tire Terminology and Definitions

Air Pressure : The amount of air inside the tire pressing outward on each square inch of the tire. Air pressure is expressed in kPa (kilopascal) or psi (pounds per square inch).

Accessory Weight : The combined weight of optional accessories. Some examples of optional accessories are automatic transmission, power windows, power seats, and air conditioning.

Aspect Ratio : The relationship of a tire's height to its width.

Belt : A rubber coated layer of cords between the plies and the tread. Cords may be made from steel or other reinforcing materials.

Bead : The tire bead contains steel wires wrapped by steel cords that hold the tire onto the rim.

Bias Ply Tire : A pneumatic tire in which the plies are laid at alternate angles less than 90 degrees to the centerline of the tread.

Cold Tire Pressure : The amount of air pressure in a tire, measured in kPa (kilopascal) or psi (pounds per square inch) before a tire has built up heat from driving. See *Tire Pressure* ⇨ *371*.

Curb Weight : The weight of a motor vehicle with standard and optional equipment including the maximum capacity of fuel, oil, and coolant, but without passengers and cargo.

DOT Markings : A code molded into the sidewall of a tire signifying that the tire is in compliance with the U.S. Department of Transportation (DOT) Motor Vehicle Safety Standards. The DOT code includes the Tire Identification Number (TIN), an alphanumeric designator which can also identify the tire manufacturer, production plant, brand, and date of production.

GVWR : Gross Vehicle Weight Rating. See *Vehicle Load Limits* ⇨ *211*.

GAWR FRT : Gross Axle Weight Rating for the front axle. See *Vehicle Load Limits* ⇨ *211*.

GAWR RR : Gross Axle Weight Rating for the rear axle. See *Vehicle Load Limits* ⇨ *211*.

Intended Outboard Sidewall : The side of an asymmetrical tire that must always face outward when mounted on a vehicle.

Kilopascal (kPa) : The metric unit for air pressure.

Light Truck (LT-Metric) Tire : A tire used on light duty trucks and some multipurpose passenger vehicles.

Load Index : An assigned number ranging from 1 to 279 that corresponds to the load carrying capacity of a tire.

Maximum Inflation Pressure : The maximum air pressure to which a cold tire can be inflated. The maximum air pressure is molded onto the sidewall.

Maximum Load Rating : The load rating for a tire at the maximum permissible inflation pressure for that tire.

Maximum Loaded Vehicle Weight : The sum of curb weight, accessory weight, vehicle capacity weight, and production options weight.

Normal Occupant Weight : The number of occupants a vehicle is designed to seat multiplied by 68 kg (150 lb). See *Vehicle Load Limits* ⇨ *211*.

Occupant Distribution : Designated seating positions.

Outward Facing Sidewall : The side of an asymmetrical tire that has a particular side that faces outward when mounted on a vehicle. The side of the tire that contains a whitewall, bears white lettering, or bears manufacturer, brand, and/or model name molding that is higher or deeper than the same moldings on the other sidewall of the tire.

Passenger (P-Metric) Tire : A tire used on passenger cars and some light duty trucks and multipurpose vehicles.

Recommended Inflation Pressure : Vehicle manufacturer's recommended tire inflation pressure as shown on the tire placard. See *Tire Pressure* ⇨ *371* and *Vehicle Load Limits* ⇨ *211*.

Radial Ply Tire : A pneumatic tire in which the ply cords that extend to the beads are laid at 90 degrees to the centerline of the tread.

Rim : A metal support for a tire and upon which the tire beads are seated.

Sidewall : The portion of a tire between the tread and the bead.

Speed Rating : An alphanumeric code assigned to a tire indicating the maximum speed at which a tire can operate.

Traction : The friction between the tire and the road surface. The amount of grip provided.

Tread : The portion of a tire that comes into contact with the road.

Treadwear Indicators : Narrow bands, sometimes called wear bars, that show across the tread of a tire when only 1.6 mm (1/16 in) of tread remains. See *When It Is Time for New Tires* ⇨ *381*.

UTQGS (Uniform Tire Quality Grading Standards) : A tire information system that provides consumers with ratings for a tire's traction, temperature, and treadwear. Ratings are determined by tire manufacturers using

government testing procedures. The ratings are molded into the sidewall of the tire. See *Uniform Tire Quality Grading* ⇨ *384*.

Vehicle Capacity Weight : The number of designated seating positions multiplied by 68 kg (150 lb) plus the rated cargo load. See *Vehicle Load Limits* ⇨ *211*.

Vehicle Maximum Load on the Tire : Load on an individual tire due to curb weight, accessory weight, occupant weight, and cargo weight.

Vehicle Placard : A label permanently attached to a vehicle showing the vehicle capacity weight and the original equipment tire size and recommended inflation pressure. See “Tire and Loading Information Label” under *Vehicle Load Limits* ⇨ *211*.

Tire Pressure

Tires need the correct amount of air pressure to operate effectively.

⚠ Warning

Neither tire underinflation nor overinflation is good. Underinflated tires, or tires that do not have enough air, can result in:

- Tire overloading and overheating which could lead to a blowout.
- Premature or irregular wear.
- Poor handling.
- Reduced fuel economy.

Overinflated tires, or tires that have too much air, can result in:

- Unusual wear.

(Continued)

Warning (Continued)

- Poor handling.
- Rough ride.
- Needless damage from road hazards.

The Tire and Loading Information label on the vehicle indicates the original equipment tires and the correct cold tire inflation pressures. The recommended pressure is the minimum air pressure needed to support the vehicle's maximum load carrying capacity.

For additional information regarding how much weight the vehicle can carry, and an example of the Tire and Loading Information label, see *Vehicle Load Limits* ⇨ *211*. How the vehicle is loaded affects vehicle handling and ride comfort. Never

load the vehicle with more weight than it was designed to carry.

When to Check

Check the pressure of the tires once a month or more.

Do not forget the spare tire, if the vehicle has one. See *Full-Size Spare Tire* ⇨ *398* for additional information.

How to Check

Use a good quality pocket-type gauge to check tire pressure. Proper tire inflation cannot be determined by looking at the tire. Check the tire inflation pressure when the tires are cold, meaning the vehicle has not been driven for at least three hours or no more than 1.6 km (1 mi).

Remove the valve cap from the tire valve stem. Press the tire gauge firmly onto the valve to get a pressure measurement. If the cold tire inflation pressure matches the recommended pressure on the Tire and Loading Information label, no further adjustment is necessary. If the inflation pressure is low, add air until the recommended pressure is reached. If the inflation pressure is high, press on the metal stem in the center of the tire valve to release air.

Re-check the tire pressure with the tire gauge.

Put the valve caps back on the valve stems to keep out dirt and moisture and prevent leaks. Use only valve caps designed for the vehicle by GM. TPMS sensors could be damaged and would not be covered by the vehicle warranty.

Tire Pressure for High-Speed Operation

⚠ Warning

Driving at high speeds, 160 km/h (100 mph) or higher, puts additional strain on tires. Sustained high-speed driving causes excessive heat buildup and can cause sudden tire failure. This could cause a crash, and you or others could be killed. Some high-speed rated tires require inflation pressure adjustment for high-speed operation. When speed limits and road conditions allow the vehicle to be driven at high speeds, make sure the tires are rated for high-speed operation, are in excellent condition, and are set to the correct cold tire inflation pressure for the vehicle load.

Tire Pressure Monitor System

The Tire Pressure Monitor System (TPMS) uses radio and sensor technology to check tire pressure levels. The TPMS sensors monitor the air pressure in your tires and transmit tire pressure readings to a receiver located in the vehicle.

Each tire, including the spare (if provided), should be checked monthly when cold and inflated to the inflation pressure recommended by the vehicle manufacturer on the vehicle placard or tire inflation pressure label. (If your vehicle has tires of a different size than the size indicated on the vehicle placard or tire inflation pressure label, you should determine the proper tire inflation pressure for those tires.)

As an added safety feature, your vehicle has been equipped with a tire pressure monitoring system (TPMS) that illuminates a low tire pressure telltale when one or more of your tires is significantly under-inflated.

Accordingly, when the low tire pressure telltale illuminates, you should stop and check your tires as soon as possible, and inflate them to the proper pressure. Driving on a significantly under-inflated tire causes the tire to overheat and can lead to tire failure. Under-inflation also reduces fuel efficiency and tire tread life, and may affect the vehicle's handling and stopping ability.

Please note that the TPMS is not a substitute for proper tire maintenance, and it is the driver's responsibility to maintain correct tire pressure, even if under-inflation has not reached the level to trigger illumination of the TPMS low tire pressure telltale.

Your vehicle has also been equipped with a TPMS malfunction indicator to indicate when the system is not operating properly. The TPMS malfunction indicator is combined with the low tire pressure telltale. When the system detects a malfunction, the telltale will flash for approximately one minute and then remain continuously illuminated. This sequence will continue upon subsequent vehicle start-ups as long as the malfunction exists.

When the malfunction indicator is illuminated, the system may not be able to detect or signal low tire pressure as intended. TPMS malfunctions may occur for a variety of reasons, including the installation of replacement or alternate tires or wheels on the vehicle that prevent the TPMS from functioning properly. Always check the TPMS malfunction telltale after replacing one or more tires or wheels on your vehicle to ensure that the replacement or alternate tires and wheels allow the TPMS to continue to function properly.

See *Tire Pressure Monitor Operation* ⇨ *374*.

See *Radio Frequency Statement* ⇨ *447*.

Tire Pressure Monitor Operation

This vehicle may have a Tire Pressure Monitor System (TPMS). The TPMS is designed to warn the driver when a low tire pressure condition exists. TPMS sensors are mounted onto each tire and wheel assembly, excluding the spare tire and wheel assembly. The TPMS sensors monitor the air pressure in the tires and transmit the tire pressure readings to a receiver located in the vehicle.

When a low tire pressure condition is detected, the TPMS illuminates the low tire pressure warning light located on the instrument cluster. If the warning light comes on, stop as soon as possible and inflate the tires to the recommended pressure shown on the Tire and Loading Information label. See *Vehicle Load Limits* ⇨ *211*.

A message to check the pressure in a specific tire displays in the Driver Information Center (DIC). The low tire pressure warning light and the DIC warning message come on at each ignition cycle until the tires are inflated to the correct inflation pressure. If the vehicle has DIC buttons, tire pressure levels can be viewed. For additional information and details about the DIC operation and displays, see *Driver Information Center (DIC) (Midlevel and Uplevel)* ⇨ *162* or *Driver Information Center (DIC) (Base Level)* ⇨ *161*.

The low tire pressure warning light may come on in cool weather when the vehicle is first started, and then turn off as the vehicle is driven. This could be an early indicator that the air pressure is getting low and needs to be inflated to the proper pressure.

A Tire and Loading Information label shows the size of the original equipment tires and the correct inflation pressure for the tires when they are cold. See *Vehicle Load Limits* ⇨ *211*, for an example of the Tire and Loading Information label and its location. Also see *Tire Pressure* ⇨ *371*.

The TPMS can warn about a low tire pressure condition but it does not replace normal tire maintenance. See *Tire Inspection* ⇨ *379*, *Tire Rotation* ⇨ *380* and *Tires* ⇨ *362*.

Caution

Tire sealant materials are not all the same. A non-approved tire sealant could damage the TPMS sensors. TPMS sensor damage caused by using an incorrect tire sealant is not covered by the vehicle warranty. Always use only the GM approved tire sealant available through your dealer or included in the vehicle.

TPMS Malfunction Light and Message

The TPMS will not function properly if one or more of the TPMS sensors are missing or inoperable. When the system detects a malfunction, the low tire pressure warning light flashes for about one minute and then stays on for the remainder of the ignition cycle. A DIC warning message also displays. The malfunction light and DIC warning message come on at each ignition cycle until the problem is corrected. Some of the conditions that can cause these to come on are:

- One of the road tires has been replaced with the spare tire. The spare tire does not have a TPMS sensor. The malfunction light and the DIC message should go off after the road tire is replaced and the sensor matching process is performed successfully. See "TPMS Sensor Matching Process" later in this section.
- The TPMS sensor matching process was not done or not completed successfully after rotating the tires. The malfunction light and the DIC message should go off after successfully completing the sensor matching process. See "TPMS Sensor Matching Process" later in this section.
- One or more TPMS sensors are missing or damaged. The malfunction light and the DIC message should go off when the TPMS sensors are installed and the sensor matching process is performed successfully. See your dealer for service.
- Replacement tires or wheels do not match the original equipment tires or wheels. Tires and wheels other than those recommended could prevent the TPMS from functioning properly. See *Buying New Tires* ⇨ *382*.
- Operating electronic devices or being near facilities using radio wave frequencies similar to the TPMS could cause the TPMS sensors to malfunction.

If the TPMS is not functioning properly, it cannot detect or signal a low tire pressure condition. See your dealer for service if the TPMS malfunction light and DIC message come on and stay on.

Tire Fill Alert (If Equipped)

This feature provides visual and audible alerts outside the vehicle to help when inflating an underinflated tire to the recommended cold tire pressure.

When the low tire pressure warning light comes on:

1. Park the vehicle in a safe, level place.
2. Set the parking brake firmly.
3. Place the vehicle in P (Park).
4. Add air to the tire that is underinflated. The turn signal lamp will flash.

When the recommended pressure is reached, the horn sounds once and the turn signal lamp will stop flashing and briefly turn solid.

Repeat these steps for all underinflated tires that have illuminated the low tire pressure warning light.

⚠ Warning

Overinflating a tire could cause the tire to rupture and you or others could be injured. Do not exceed the maximum pressure listed on the tire sidewall. See *Tire Sidewall Labeling* ⇨ *364* and *Vehicle Load Limits* ⇨ *211*.

If the tire is overinflated by more than 35 kPa (5 psi), the horn will sound multiple times and the turn signal lamp will continue to flash for several seconds after filling stops. To release and correct the pressure, while the turn signal lamp is still flashing, briefly press the center of the valve stem. When the recommended pressure is reached, the horn sounds once.

If the turn signal lamp does not flash within 15 seconds after starting to inflate the tire, the tire fill alert has not been activated or is not working.

If the hazard warning flashers are on, the tire fill alert visual feedback will not work properly.

The TPMS will not activate the tire fill alert properly under the following conditions:

- There is interference from an external device or transmitter.
- The air pressure from the inflation device is not sufficient to inflate the tire.
- There is a malfunction in the TPMS.
- There is a malfunction in the horn or turn signal lamps.
- The identification code of the TPMS sensor is not registered to the system.
- The battery of the TPMS sensor is low.

If the tire fill alert does not operate due to TPMS interference, move the vehicle about 1 m (3 ft) back or forward and try again. If the tire fill alert feature is not working, use a tire pressure gauge.

TPMS Sensor Matching Process

Each TPMS sensor has a unique identification code. The identification code needs to be matched to a new tire/wheel position after rotating the vehicle's tires or replacing one or more of the TPMS sensors. Also, the TPMS sensor matching process should be performed after replacing a spare tire with a road tire containing the TPMS sensor. The malfunction light and the DIC message should go off at the next ignition cycle. The sensors are matched to the tire/wheel positions, using a TPMS relearn tool, in the following order: driver side front tire, passenger side front tire, passenger side rear tire, and driver side rear.

See your dealer for service or to purchase a relearn tool. A TPMS relearn tool can also be purchased. See Tire Pressure Monitor Sensor Activation Tool at www.gmtoolsandequipment.com or call 1-800-GM TOOLS (1-800-468-6657).

There are two minutes to match the first tire/wheel position, and five minutes overall to match all four tire/wheel positions. If it takes longer, the matching process stops and must be restarted.

The TPMS sensor matching process is:

1. Set the parking brake.
2. Turn the ignition on without starting the vehicle.
3. Uplevel DIC Only: Make sure the Tire Pressure info page option is turned on. The info pages on the DIC can be turned on and off through the Options menu. See *Driver Information Center (DIC) (Midlevel and Uplevel)* ⇨ *162* or *Driver Information Center (DIC) (Base Level)* ⇨ *161*.
4. If the vehicle has an uplevel DIC, use the DIC controls on the right side of the steering wheel to scroll to the Tire Pressure screen under the DIC info page.

   If the vehicle has a base level DIC, use the trip odometer reset stem to scroll to the Tire Pressure screen.
5. If the vehicle has an uplevel DIC, press and hold the thumbwheel located in the center of the DIC controls on the right side of the steering wheel.

   If the vehicle has a base level DIC, press and hold the trip odometer reset stem for about five seconds. A message asking if the process should begin should appear. Select yes and press the trip odometer reset stem to confirm the selection.

   The horn sounds twice to signal the receiver is in relearn mode and the TIRE LEARNING ACTIVE message displays on the DIC screen.
6. Start with the driver side front tire.
7. Place the relearn tool against the tire sidewall, near the valve stem. Then press the button to activate the TPMS sensor. A horn chirp confirms that the sensor identification code has been matched to this tire and wheel position.
8. Proceed to the passenger side front tire, and repeat the procedure in Step 7.

9. Proceed to the passenger side rear tire, and repeat the procedure in Step 7.
10. Proceed to the driver side rear tire, and repeat the procedure in Step 7. The horn sounds two times to indicate the sensor identification code has been matched to the driver side rear tire, and the TPMS sensor matching process is no longer active. The TIRE LEARNING ACTIVE message on the DIC display screen goes off.
11. Turn the vehicle off.
12. Set all four tires to the recommended air pressure level as indicated on the Tire and Loading Information label.

Trailer Tire Pressure Monitoring Operation

If equipped, the Trailer Tire Pressure Monitoring System (TTPMS) is designed to monitor the pressure of the trailer tires and warn the driver when a low pressure condition exists. TTPMS sensors for four tires are provided. The system can accommodate a trailer with up to six tires if additional sensors are purchased from the dealer. Also, the system can be paired with up to five individual trailers.

Prior to use, the vehicle must learn the sensors by following the learning process. See *Trailering App* ⇨ *300*.

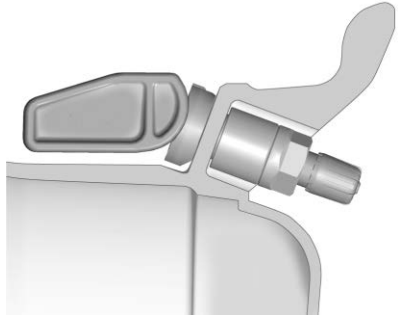

Contact your trailer service center or tire service center to have the pressure sensors installed inside the trailer tires. The technician should insert the sensor stem through the hole in the trailer wheel. When the sensor is correctly positioned, the nut on the sensor stem should be tightened to 8 N•m (6 lb ft). When mounting the trailer tire onto the trailer wheel be careful not to damage the sensor.

The Trailering App can be used to view the tire pressures after the recommended trailer tire pressures have been entered. Refer to the trailer tire placard on the trailer or the trailer tire sidewall for the recommended tire pressure.

The system is compatible with trailer tires that have placard pressure values from 103 - 689 kpa (15 - 100 psi). The hole in the wheel for the tire stem must be 11.43 mm (0.453 in) in diameter. Use of the pressure sensors on a wheel with a different stem hole size could result in loss of air from the tire.

If a low trailer tire pressure condition is detected, the TTPMS displays a warning message on the DIC. If the warning message is displayed, stop as soon as possible and inflate the tires to the recommended pressure shown on the tire placard on the trailer.

In addition, the TTPMS monitors the temperature of the trailer tires. If the system detects a high temperature on one or more of the trailer tires, a warning message will be displayed on the DIC. If this warning message is displayed, stop as soon as possible, and inspect the overheated trailer tire. Common causes for high trailer tire temperature are underinflation, overloading, or tire damage.

TTPMS Malfunction Message

The TTPMS will not function properly if one or more of the trailer tire sensors are missing or inoperable. If the system detects a malfunction, a DIC message indicates that the system requires service. Some of the conditions that can cause the service message to occur are:

- One of the trailer tires has been replaced with the spare tire which does not have a learned TTPMS sensor. The DIC message should turn off after the pressure sensor is installed in the tire, and the learning process is performed successfully. See "TTPMS Sensor Learning Process" under *Trailering App* ⇨ *300*.
- The TTPMS sensor learning process was not done or not completed successfully. The DIC message should go off after successfully completing the sensor learning process. See "TTPMS Sensor Learning Process" under *Trailering App* ⇨ *300*.
- One or more TTPMS sensors are missing or damaged. The DIC message should go off when the TTPMS sensors are installed and the sensor learning process is performed successfully. See "TTPMS Sensor Learning Process" under *Trailering App* ⇨ *300*.
- Operating electronic devices or being near facilities using radio wave frequencies similar to the TTPMS could cause interference to the TTPMS which could cause loss of signal reception from the sensor.
- If the system does not receive the signal from an individual sensor, an error message may not occur until the vehicle has been driver for a period of time.

If the TTPMS is not functioning properly, it cannot detect or signal a low tire condition. See your dealer for service if the DIC message comes on and stays on when the trailer tire pressures have been checked and determined to be correct.

Tire Inspection

We recommend that the tires, including the spare tire, if the vehicle has one, be inspected for signs of wear or damage at least once a month.

Replace the tire if:

- The indicators at three or more places around the tire can be seen.

- There is cord or fabric showing through the tire's rubber.
- The tread or sidewall is cracked, cut, or snagged deep enough to show cord or fabric.
- The tire has a bump, bulge, or split.
- The tire has a puncture, cut, or other damage that cannot be repaired well because of the size or location of the damage.

Tire Rotation

Tires should be rotated every 12 000 km (7,500 mi). See *Maintenance Schedule* ⇨ *419*.

Tires are rotated to achieve a uniform wear for all tires. The first rotation is the most important.

Anytime unusual wear is noticed, rotate the tires as soon as possible, check for proper tire inflation pressure, and check for damaged tires or wheels. If the unusual wear continues after the rotation, check the wheel alignment. See *When It Is Time for New Tires* ⇨ *381* and *Wheel Replacement* ⇨ *385*.

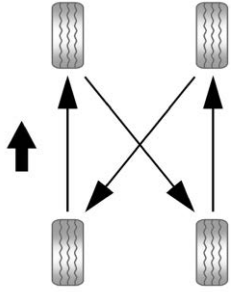

Use this rotation pattern when rotating the tires.

Do not include the spare tire in the tire rotation.

Adjust the front and rear tires to the recommended inflation pressure on the Tire and Loading Information label after the tires have been rotated. See *Tire Pressure* ⇨ *371* and *Vehicle Load Limits* ⇨ *211*.

Reset the Tire Pressure Monitor System. See *Tire Pressure Monitor Operation* ⇨ *374*.

Check that all wheel nuts are properly tightened. See “Wheel Nut Torque” under *Capacities and Specifications* ⇨ *434*, and “Removing the Flat Tire and Installing the Spare Tire” under *Tire Changing* ⇨ *389*.

⚠ Warning

Rust or dirt on a wheel, or on the parts to which it is fastened, can make wheel nuts become loose after time. The wheel could come off and cause a crash. When

(Continued)

Warning (Continued)

changing a wheel, remove any rust or dirt from places where the wheel attaches to the vehicle. In an emergency, a cloth or a paper towel can be used; however, use a scraper or wire brush later to remove all rust or dirt.

Lightly coat the inner diameter of the wheel hub opening with wheel bearing grease after a wheel change or tire rotation to prevent corrosion or rust buildup. Do not get grease on the wheel mounting surface or on the wheel nuts or bolts.

When It Is Time for New Tires

Factors, such as maintenance, temperatures, driving speeds, vehicle loading, and road conditions affect the wear rate of the tires.

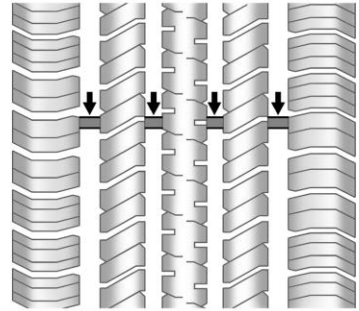

Treadwear indicators are one way to tell when it is time for new tires. Treadwear indicators appear when the tires have only 1.6 mm (1/16 in) or less of tread remaining. Some commercial truck tires may not have treadwear indicators. See *Tire Inspection* ⇨ *379* and *Tire Rotation* ⇨ *380* for additional information.

The rubber in tires ages over time. This also applies to the spare tire, if the vehicle has one, even if it is never used. Multiple factors including temperatures, loading conditions, and inflation pressure maintenance affect how fast aging takes place. GM recommends that tires, including the spare if equipped, be replaced after six years, regardless of tread wear. To identify the age of a tire, use the tire manufacture date which is the last four digits of the DOT Tire Identification Number (TIN) which is molded into one side of the tire sidewall. The first two digits represent the week (01-52) and the last two digits, the year. For example, the third week of the year 2010 would have a four-digit DOT date of 0310.

Vehicle Storage

Tires age when stored normally mounted on a parked vehicle. Park a vehicle that will be stored for at least a month in a cool, dry, clean area away from direct sunlight to slow aging. This area should be free of grease, gasoline, or other substances that can deteriorate rubber.

Parking for an extended period can cause flat spots on the tires that may result in vibrations while

driving. When storing a vehicle for at least a month, remove the tires or raise the vehicle to reduce the weight from the tires.

Buying New Tires

GM has developed and matched specific tires for the vehicle. The original equipment tires installed were designed to meet General Motors Tire Performance Criteria Specification (TPC Spec) system rating. When replacement tires are needed, GM strongly recommends buying tires with the same TPC Spec rating.

GM's exclusive TPC Spec system considers over a dozen critical specifications that impact the overall performance of the vehicle, including brake system performance, ride and handling, traction control, and tire pressure monitoring performance. GM's TPC Spec number is molded onto the tire's sidewall near the tire size. If the tires have an all-season tread design, the TPC Spec number will be followed by MS for mud and snow. See *Tire Sidewall Labeling* ⇨ *364* for additional information.

GM recommends replacing worn tires in complete sets of four (six for dual rear wheels). Uniform tread depth on all tires will help to maintain the performance of the vehicle. Braking and handling performance may be adversely affected if all the tires are not replaced at the same time. If proper rotation and maintenance have been done, all four tires (six for dual rear wheels) should wear out at about the same time. See *Tire Rotation* ⇨ *380* for information on proper tire rotation. However, if it is necessary to replace only one axle set of worn tires, place the new tires on the rear axle (two for single rear wheels, four for dual rear wheels).

⚠ Warning

Tires could explode during improper service. Attempting to mount or dismount a tire could cause injury or death. Only your dealer or authorized tire service center should mount or dismount the tires.

⚠ Warning

Mixing tires of different sizes, brands, or types may cause loss of control of the vehicle, resulting in a crash or other vehicle damage. Use the correct size, brand, and type of tires on all wheels.

(Continued)

Warning (Continued)

This vehicle may have a different size spare than the road tires originally installed on the vehicle. When new, the vehicle included a spare tire and wheel assembly with a similar overall diameter as the road tires and wheels, so it is all right to drive on it. The spare tire was developed for use on this vehicle and will not affect vehicle handling.

⚠ Warning

Using bias-ply tires on the vehicle may cause the wheel rim flanges to develop cracks after many miles of driving. A tire and/or wheel could fail suddenly and cause a crash. Use only radial-ply tires with the wheels on the vehicle.

Winter tires with the same speed rating as the original equipment tires may not be available for H, V, W, Y and ZR speed rated tires. Never exceed the winter tires' maximum speed capability when using winter tires with a lower speed rating.

If the vehicle tires must be replaced with a tire that does not have a TPC Spec number, make sure they are the same size, load range, speed rating, and construction (radial) as the original tires.

Vehicles that have a tire pressure monitoring system could give an inaccurate low-pressure warning if non-TPC Spec rated tires are installed. See *Tire Pressure Monitor System* ⇨ *373*.

The Tire and Loading Information label indicates the original equipment tires on the vehicle. See *Vehicle Load Limits* ⇨ *211* for the label location and more information about the Tire and Loading Information label.

Different Size Tires and Wheels

If wheels or tires are installed that are a different size than the original equipment wheels and tires, vehicle performance, including its braking, ride and handling characteristics, stability, and resistance to rollover may be affected. If the vehicle has electronic systems such as antilock brakes, rollover airbags, traction control, electronic stability control, or All-Wheel Drive, the performance of these systems can also be affected.

⚠ Warning

If different sized wheels are used, there may not be an acceptable level of performance and safety if tires not recommended for those

(Continued)

Warning (Continued)

wheels are selected. This increases the chance of a crash and serious injury. Only use GM specific wheel and tire systems developed for the vehicle, and have them properly installed by a GM certified technician.

See *Buying New Tires* ⇨ *382* and *Accessories and Modifications* ⇨ *317*.

Uniform Tire Quality Grading

The following information relates to the system developed by the United States National Highway Traffic Safety Administration (NHTSA), which grades tires by treadwear, traction, and temperature performance. This applies only to vehicles sold in the United States. The grades are molded on the sidewalls of most passenger car tires. The Uniform Tire Quality Grading (UTQG) system does not apply to deep tread, winter tires, compact spare tires, tires with nominal rim diameters of 10 to 12 inches (25 to 30 cm), or to some limited-production tires.

While the tires available on General Motors passenger cars and light trucks may vary with respect to these grades, they must also conform to federal safety requirements and additional General Motors Tire Performance Criteria (TPC) standards.

Quality grades can be found where applicable on the tire sidewall between tread shoulder and maximum section width. For example:

Treadwear 200 Traction AA Temperature A

All Passenger Car Tires Must Conform to Federal Safety Requirements In Addition To These Grades.

Treadwear

The treadwear grade is a comparative rating based on the wear rate of the tire when tested under controlled conditions on a specified government test course. For example, a tire graded 150 would wear one and one-half (1½) times as well on the government course as a tire graded 100. The relative performance of tires depends upon the actual conditions of their use, however, and may depart significantly from the norm due to variations in driving habits, service practices and differences in road characteristics and climate.

Traction

The traction grades, from highest to lowest, are AA, A, B, and C. Those grades represent the tire's ability to stop on wet pavement as measured under controlled conditions on specified government test surfaces of asphalt and concrete. A tire marked C may have poor traction performance. Warning: The traction grade assigned to this tire is based on straight-ahead braking traction tests, and does not include acceleration, cornering, hydroplaning, or peak traction characteristics.

Temperature

The temperature grades are A (the highest), B, and C, representing the tire's resistance to the generation of heat and its ability to dissipate heat when tested under controlled conditions on a specified indoor laboratory test wheel. Sustained high temperature can cause the material of the tire to degenerate and reduce tire life, and excessive temperature can lead to sudden tire failure. The grade C corresponds to a level of performance which all passenger car tires must meet under the Federal Motor Safety Standard No. 109. Grades B and A represent higher levels of performance on the laboratory test wheel than the minimum required by law. Warning: The temperature grade for this tire is established for a tire that is properly inflated and not overloaded. Excessive speed, underinflation, or excessive loading, either separately or in combination, can cause heat buildup and possible tire failure.

Wheel Alignment and Tire Balance

The tires and wheels were aligned and balanced at the factory to provide the longest tire life and best overall performance. Adjustments to wheel alignment and tire balancing are not necessary on a regular basis. Consider an alignment check if there is unusual tire wear or the vehicle is significantly pulling to one side or the other. Some slight pull to the left or right, depending on the crown of the road and/or other road surface variations such as troughs or ruts, is normal. If the vehicle is vibrating when driving on a smooth road, the tires and wheels may need to be rebalanced. See your dealer for proper diagnosis.

Wheel Replacement

Replace any wheel that is bent, cracked, or badly rusted or corroded. If wheel nuts keep coming loose, the wheel, wheel bolts and wheel nuts should be replaced.
If the wheel leaks air, replace it.

Some aluminum wheels can be repaired. See your dealer if any of these conditions exist.

Your dealer will know the kind of wheel that is needed.

Each new wheel should have the same load-carrying capacity, diameter, width, offset and be mounted the same way as the one it replaces.

Replace wheels, wheel bolts, wheel nuts, or Tire Pressure Monitor System (TPMS) sensors with new GM original equipment parts.

⚠ Warning

Using the wrong replacement wheels, wheel bolts, or wheel nuts can be dangerous. It could affect the braking and handling of the vehicle. Tires can lose air, and cause loss of control, causing a crash. Always use the correct wheel, wheel bolts, and wheel nuts for replacement.

Caution

The wrong wheel can also cause problems with bearing life, brake cooling, speedometer or odometer calibration, headlamp aim, bumper height, vehicle ground clearance, and tire or tire chain clearance to the body and chassis.

Whenever a wheel, wheel bolt, or wheel nut is replaced on a dual wheel setup, check the wheel nut torque after 160,1 600, and 10 000 km (100,1,000, and 6,000 mi) of driving. For proper torque, see “Wheel Nut Torque” under *Capacities and Specifications* ⇨ *434*.

See *If a Tire Goes Flat* ⇨ *387* for more information.

Used Replacement Wheels

⚠ Warning

Replacing a wheel with a used one is dangerous. How it has been used or how far it has been driven may be unknown. It could fail suddenly and cause a crash. When replacing wheels, use a new GM original equipment wheel.

Tire Chains

⚠ Warning

If the vehicle has LT265/70R17, LT275/65R18, 275/60R20, or 275/50R22 size tires, do not use tire chains. They can damage the vehicle because there is not enough clearance. Tire chains used on a vehicle without the proper amount of clearance can cause damage to the brakes,

(Continued)

Warning (Continued)

suspension, or other vehicle parts. The area damaged by the tire chains could cause you to lose control of the vehicle and you or others may be injured in a crash.

Use another type of traction device only if its manufacturer recommends it for use on the vehicle and tire size combination and road conditions. Follow that manufacturer's instructions. To help avoid damage to the vehicle, drive slowly, readjust, or remove the device if it is contacting the vehicle, and do not spin the vehicle's wheels.

If you do find traction devices that will fit, install them on the rear tires.

Caution

Use tire chains only where legal and only when necessary. Use chains that are the proper size for the tires. If the vehicle has 265/70R17 or 265/65R18 size tires, they may be installed on the tires of the rear axle only. If the vehicle has 255/70R17 size tires, they may be installed on the tires of the front and rear axle. Tighten them as tightly as possible with the ends securely fastened. Drive slowly and follow the chain manufacturer's instructions. If you can hear the chains contacting the vehicle, stop and retighten them. If the contact continues, slow down until it stops. Driving too fast or spinning the wheels with chains on will damage the vehicle.

If a Tire Goes Flat

It is unusual for a tire to blowout while driving, especially if the tires are maintained properly. If air goes out of a tire, it is much more likely to leak out slowly. But if there ever is a blowout, here are a few tips about what to expect and what to do:

If a front tire fails, the flat tire creates a drag that pulls the vehicle toward that side. Take your foot off the accelerator pedal and grip the steering wheel firmly. Steer to maintain lane position, and then gently brake to a stop, well off the road, if possible.

A rear blowout, particularly on a curve, acts much like a skid and may require the same correction as used in a skid. Stop pressing the accelerator pedal and steer to straighten the vehicle. It may be very bumpy and noisy. Gently brake to a stop, well off the road, if possible.

⚠ Warning

Driving on a flat tire will cause permanent damage to the tire. Re-inflating a tire after it has been driven on while severely underinflated or flat may cause a blowout and a serious crash. Never attempt to re-inflate a tire that has been driven on while severely underinflated or flat. Have your dealer or an authorized tire service center repair or replace the flat tire as soon as possible.

⚠ Warning

Lifting a vehicle and getting under it to do maintenance or repairs is dangerous without the appropriate safety equipment and training. If a jack is provided with the vehicle, it is designed only for changing a flat tire. If it is used for

(Continued)

Warning (Continued)

anything else, you or others could be badly injured or killed if the vehicle slips off the jack. If a jack is provided with the vehicle, only use it for changing a flat tire.

If a tire goes flat, avoid further tire and wheel damage by driving slowly to a level place, well off the road, if possible. Turn on the hazard warning flashers. See *Hazard Warning Flashers* ⇨ *182*.

⚠ Warning

Changing a tire can be dangerous. The vehicle can slip off the jack and roll over or fall causing injury or death. Find a level place to change the tire. To help prevent the vehicle from moving:

1. Set the parking brake firmly.

(Continued)

Warning (Continued)

2. Put the shift lever in P (Park).
3. For vehicles with four-wheel drive with an N (Neutral) transfer case position, be sure the transfer case is in a drive gear — not in N (Neutral).
4. Turn off the engine and do not restart while the vehicle is raised.
5. Do not allow passengers to remain in the vehicle.
6. Place wheel blocks, if equipped, on both sides of the tire at the opposite corner of the tire being changed.

When the vehicle has a flat tire (2), use the following example as a guide to assist in the placement of the wheel blocks (1), if equipped.

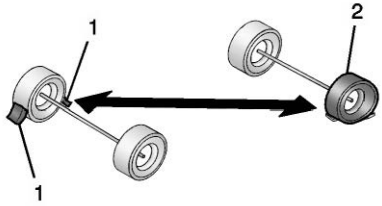

1. Wheel Block (If Equipped)
2. Flat Tire

The following information explains how to use the jack and change a tire.

Tire Changing

Removing the Spare Tire and Tools

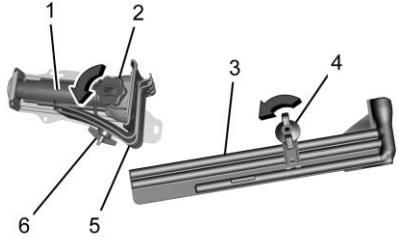

1. Jack
2. Jack Knob
3. Tool Kit
4. Wing Nut Retaining Tool Kit
5. Wheel Blocks
6. Wing Nut Retaining Wheel Blocks

The equipment is under the second row seats, if equipped, or behind the front row seats on regular cab models.

1. Turn the knob on the jack counterclockwise to lower the jack head to release the jack from its holder.
2. Turn the wing nut counterclockwise to remove the wheel blocks and the wheel block retainer.
3. Turn the wing nut used to retain the storage bag and tools counterclockwise to remove it.

Use the jack handle extensions and the wheel wrench to remove the underbody-mounted spare tire.

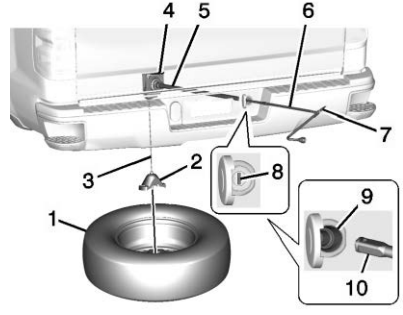

1. Spare Tire (Valve Stem Pointed Down)
2. Tire/Wheel Retainer
3. Hoist Cable
4. Hoist Assembly
5. Hoist Shaft
6. Jack Handle Extensions
7. Wheel Wrench
8. Spare Tire Lock (If Equipped)
9. Hoist Shaft Access Hole
10. Hoist End of Extension Tool

1. Open the spare tire lock cover on the bumper and use the ignition key to remove the spare tire lock (8). To remove the spare tire lock, insert the ignition key, turn, and pull straight out.

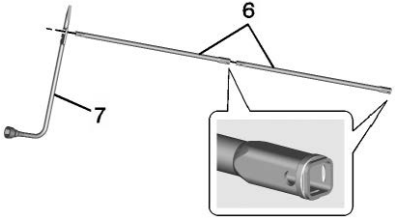

2. Assemble the wheel wrench (7) and the two jack handle extensions (6), as shown.

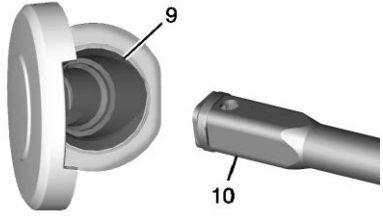

3. Insert the hoist end (open end) (10) of the extension through the hole (9) in the rear bumper.

   Do not use the chiseled end of the wheel wrench.

   Be sure the hoist end of the extension (10) connects to the hoist shaft. The ribbed square end of the extension is used to lower the spare tire.

4. Turn the wheel wrench counterclockwise to lower the spare tire to the ground. Continue to turn the wheel wrench until the spare tire can be pulled out from under the vehicle.

5. Pull the spare tire out from under the vehicle.

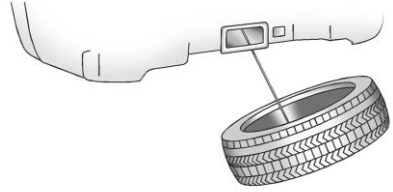

6. Tilt the tire toward the vehicle with some slack in the cable to access the tire/wheel retainer.

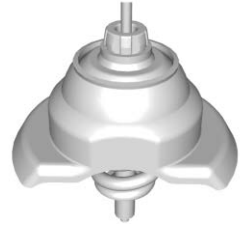

Tilt the retainer and pull it through the center of the wheel along with the cable and spring.

7. Put the spare tire near the flat tire.

Removing the Flat Tire and Installing the Spare Tire

Use the following pictures and instructions to remove the flat tire and raise the vehicle.

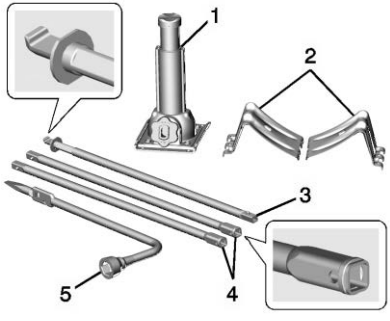

1. Jack
2. Wheel Blocks
3. Jack Handle
4. Jack Handle Extensions
5. Wheel Wrench

The tools you will be using include the jack (1), the wheel blocks (2), the jack handle (3), the jack handle extensions (4), and the wheel wrench (5).

1. Do a safety check before proceeding. See *If a Tire Goes Flat* ⇨ *387*.

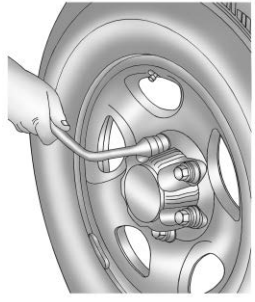

2. If the vehicle has wheel nut caps, loosen them by turning the wheel wrench counterclockwise.

If the vehicle has a center cap with wheel nut caps, the wheel nut caps are designed to stay with the center cap after they are loosened. Remove the entire center cap.

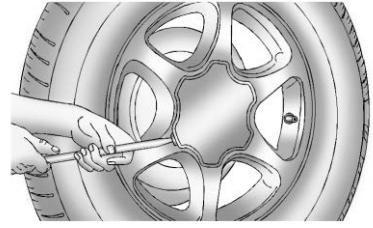

If the wheel has a smooth center cap, place the chisel end of the wheel wrench in the slot on the wheel, and gently pry it out.

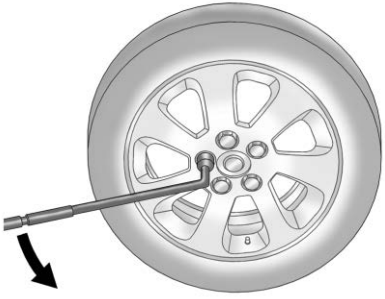

3. Use the wheel wrench and turn it counterclockwise to loosen the wheel nuts. Do not remove the wheel nuts yet.

⚠ Warning

To avoid personal injury and vehicle damage, disable the power assist steps before using a jack or placing an object under the vehicle. See *Power Assist Steps* ⇨ *54*.

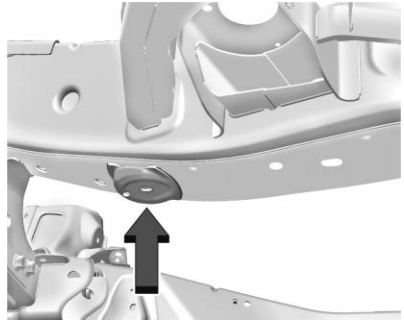

Front Position

4. If the flat tire is on the front of the vehicle, position the jack under the bracket attached to the vehicle's frame, behind the flat tire, as shown.

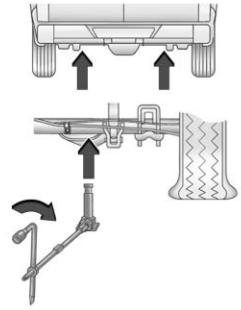

Rear Position

5. If the flat tire is on the rear, position the jack under the rear axle about 5 cm (2 in) inboard of the shock absorber bracket.

⚠ Warning

Getting under a vehicle when it is lifted on a jack is dangerous. If the vehicle slips off the jack, you could be badly injured or killed. Never get under a vehicle when it is supported only by a jack.

⚠ Warning

Raising the vehicle with the jack improperly positioned can damage the vehicle and even make the vehicle fall. To help avoid personal injury and vehicle damage, be sure to fit the jack lift head into the proper location before raising the vehicle.

6. Turn the wheel wrench clockwise to raise the vehicle. Raise the vehicle far enough off the ground so there is enough room for the spare tire to fit under the wheel well.

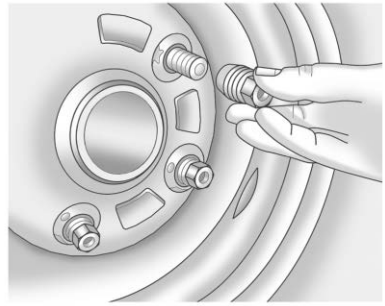

7. Remove all the wheel nuts and take off the flat tire.

⚠ Warning

Rust or dirt on a wheel, or on the parts to which it is fastened, can make wheel nuts become loose after time. The wheel could come off and cause a crash. When changing a wheel, remove any rust or dirt from places where the wheel attaches to the vehicle. In an emergency, a cloth or a paper

(Continued)

Warning (Continued)

towel can be used; however, use a scraper or wire brush later to remove all rust or dirt.

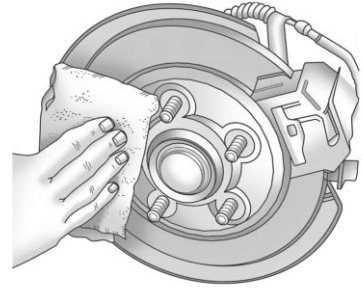

8. Remove any rust or dirt from the wheel bolts, mounting surfaces, and spare wheel.
9. Install the spare tire.

⚠ Warning

Never use oil or grease on bolts or nuts because the nuts might come loose. The vehicle's wheel could fall off, causing a crash.

10. Put the wheel nuts back on with the rounded end of the nuts toward the wheel.
11. Tighten each wheel nut by hand. Then use the wheel wrench to tighten the nuts until the wheel is held against the hub.
12. Turn the wheel wrench counterclockwise to lower the vehicle. Lower the jack completely.

⚠ Warning

If wheel studs are damaged, they can break. If all the studs on a wheel broke, the wheel could come off and cause a crash.
If any stud is damaged because of a loose-running wheel, it could be that all of the studs are damaged. To be sure, replace all studs on the wheel. If the stud holes in a wheel have become larger, the wheel could collapse in operation. Replace any wheel if its stud holes have become larger or distorted in any way. Inspect hubs and hub-piloted wheels for damage. Because of loose running wheels, piloting pad damage may occur and require replacement of the entire hub, for proper centering of the wheels. When replacing studs, hubs, wheel nuts or wheels, be sure to use GM original equipment parts.

⚠ Warning

Wheel nuts that are improperly or incorrectly tightened can cause the wheels to become loose or come off. The wheel nuts should be tightened with a torque wrench to the proper torque specification after replacing. Follow the torque specification supplied by the aftermarket manufacturer when using accessory locking wheel nuts. See *Capacities and Specifications* ⇨ *434* for original equipment wheel nut torque specifications.

Caution

Improperly tightened wheel nuts can lead to brake pulsation and rotor damage. To avoid expensive brake repairs, evenly tighten the wheel nuts in the proper sequence and to the proper

(Continued)

Caution (Continued)

torque specification. See *Capacities and Specifications* ⇨ *434* for the wheel nut torque specification.

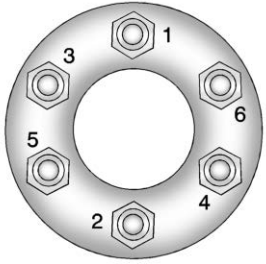

13. Tighten the nuts firmly in a crisscross sequence, as shown, by turning the wheel wrench clockwise.

When reinstalling the regular wheel and tire, also reinstall either the center cap, or bolt-on hub cap, depending on what the vehicle is equipped with. For center caps, place the cap on the wheel and tap it into place until it seats flush with the wheel. The cap only goes on one way. Be sure to line up the tab on the center cap with the indentation on the wheel. For bolt-on hub caps, align the plastic nut caps with the wheel nuts and then tighten by hand. Then use the wheel wrench to tighten.

Storing a Flat or Spare Tire and Tools

⚠ Warning

Storing a jack, a tire, or other equipment in the passenger compartment of the vehicle could cause injury. In a sudden stop or collision, loose equipment could strike someone. Store all these in the proper place.

⚠ Warning

Failure to follow these tire storage instructions carefully could result in personal injury or property damage if the hoist cable fails or if the tire comes loose. Make sure the tire is stored securely before driving.

Caution

Storing an aluminum wheel with a flat tire under your vehicle for an extended period of time or with the valve stem pointing up can damage the wheel. Always stow the wheel with the valve stem pointing down and have the wheel/tire repaired as soon as possible.

Caution

The tire hoist can be damaged if there is no tension on the cable when using it. To have the necessary tension, the spare or road tire and wheel assembly must be installed on the tire hoist to use it.

⚠ Warning

An improperly stored spare tire could come loose and cause a crash. To avoid personal injury or property damage, always store the spare tire when the vehicle is parked on a level surface.

Store the tire under the rear of the vehicle in the spare tire carrier.

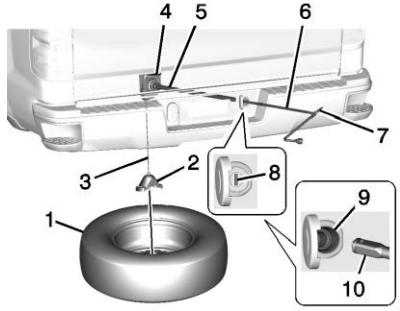

1. Spare Tire (Valve Stem Pointed Down)
2. Tire/Wheel Retainer
3. Hoist Cable
4. Hoist Assembly
5. Hoist Shaft
6. Jack Handle Extensions
7. Wheel Wrench
8. Spare Tire Lock (If Equipped)
9. Hoist Shaft Access Hole
10. Hoist End of Extension Tool

1. Put the tire on the ground at the rear of the vehicle with the valve stem pointed down, and to the rear.
2. Pull the cable and spring through the center of the wheel. Tilt the wheel retainer plate down and through the center wheel.

   Make sure the retainer is fully seated across the underside of the wheel.

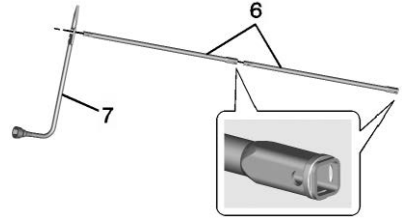

3. Attach the wheel wrench (7) and extensions (6) together, as shown.

Caution

Use of an air wrench or other power tools with the hoist mechanism is not recommended

(Continued)

Caution (Continued)

and could damage the system. Use only the tools supplied with the hoist mechanism.

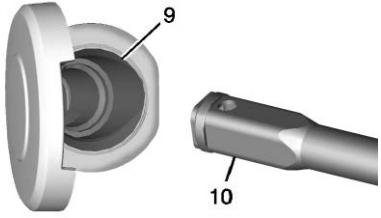

4. Insert the hoist end (10) through the hole (9) in the rear bumper and onto the hoist shaft.

   Do not use the chiseled end of the wheel wrench.

5. Raise the tire part way upward. Make sure the retainer is seated in the wheel opening.

6. Raise the tire fully against the underside of the vehicle by turning the wheel wrench clockwise until you hear two clicks or feel it skip twice. You cannot overtighten the cable.

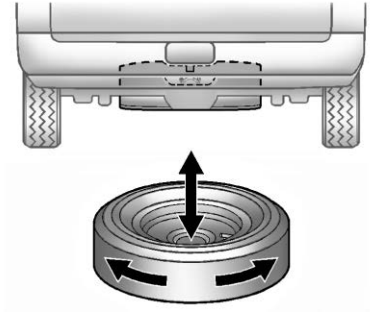

7. Make sure the tire is stored securely. Push, pull, and then try to turn the tire. If the tire moves, use the wheel wrench to tighten the cable.

   Repeat this tightness check procedure when checking the spare tire pressure according to the scheduled maintenance information or any time the spare tire is handled due to service of other components.

Correctly Stored

Incorrectly Stored

8. Reinstall the spare tire lock, if the vehicle has one.

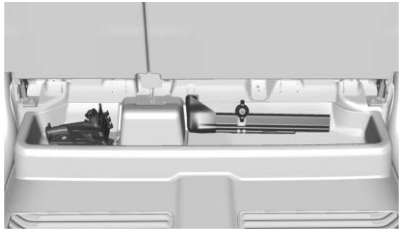

Return the jack and tools to their original location in the vehicle. See “Removing the Spare Tire and Tools.”

Full-Size Spare Tire

If this vehicle came with a full-size spare tire, it was fully inflated when new, however, it can lose air over time. Check the inflation pressure regularly. See *Tire Pressure* ⇨ *371* and *Vehicle Load Limits* ⇨ *211*. For instructions on how to remove, install, or store a spare tire, see *Tire Changing* ⇨ *389*.

If equipped with a temporary use full-size spare tire, it is indicated on the tire sidewall. See *Tire Sidewall Labeling* ⇨ *364*. This spare tire should not be driven on over 112 km/h (70 mph), or 88 km/h (55 mph) when pulling a trailer, at the proper inflation pressure. Repair and replace the road tire as soon as it is convenient, and stow the spare tire for future use.

Caution

If the vehicle has four-wheel drive and a different size spare tire is installed, do not drive in four-wheel drive until the flat tire is repaired and/or replaced. The vehicle could be damaged and the repairs would not be covered by the warranty. Never use four-wheel drive when a different size spare tire is installed on the vehicle.

The vehicle may have a different size spare tire than the road tires originally installed on the vehicle. This spare tire was developed for use on this vehicle, so it is all right to drive on it. If the vehicle has four-wheel drive and a different size spare tire is installed, drive only in two-wheel drive.

After installing the spare tire on the vehicle, stop as soon as possible and check that the spare tire is correctly inflated.

Have the damaged or flat road tire repaired or replaced and installed back onto the vehicle as soon as possible so the spare tire will be available in case it is needed again.

Do not mix tires and wheels of different sizes, because they will not fit. Keep your spare tire and its wheel together. If the vehicle has a spare tire that does not match the original road tires and wheels in size and type, do not include the spare in the tire rotation.

Jump Starting

Jump Starting - North America

For more information about the vehicle battery, see *Battery - North America* ⇨ *341*.

If the vehicle's battery (or batteries) has run down, you may want to use another vehicle and some jumper cables to start your vehicle. Be sure to use the following steps to do it safely.

⚠ Warning

WARNING: Battery posts, terminals, and related accessories contain lead and lead compounds, chemicals known to the State of California to cause cancer and birth defects or other reproductive harm. Batteries also contain other chemicals known to the State of California to cause cancer. **WASH HANDS AFTER**

(Continued)

Warning (Continued)

HANDLING. For more information go to www.P65Warnings.ca.gov/passenger-vehicle.

See *California Proposition 65 Warning* ⇨ *317* and the back cover.

⚠ Warning

Batteries can hurt you. They can be dangerous because:

- They contain acid that can burn you.
- They contain gas that can explode or ignite.
- They contain enough electricity to burn you.

If you do not follow these steps exactly, some or all of these things can hurt you.

Caution

Ignoring these steps could result in costly damage to the vehicle that would not be covered by the vehicle warranty. Trying to start the vehicle by pushing or pulling it will not work, and it could damage the vehicle.

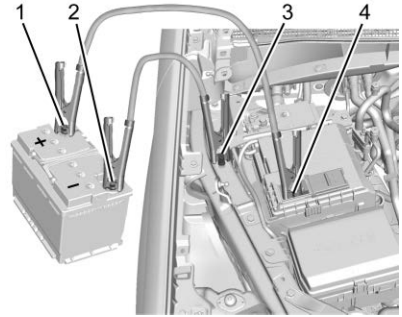

1. Good Battery Positive Terminal
2. Good Battery Negative Terminal

3. Discharged Battery Remote Negative Terminal
4. Discharged Battery Remote Positive Terminal

The jump start positive post (1) and negative post (2) are on the battery of the vehicle providing the jump start.

The jump start positive post (4) and the negative grounding point (3) for the discharged battery are on the passenger side of the vehicle.

The positive jump start connection for the discharged battery is under a cover. Slide the cover to expose the terminal.

1. Check the other vehicle. It must have a 12-volt battery with a negative ground system.

Caution

If the other vehicle does not have a 12-volt system with a negative ground, both vehicles can be

(Continued)

Caution (Continued)

damaged. Only use a vehicle that has a 12-volt system with a negative ground for jump starting.

2. If you have a vehicle with a diesel engine with two batteries, you should know before you begin that, especially in cold weather, you may not be able to get enough power from a single battery in another vehicle to start your diesel engine. If your vehicle has more than one battery, using the battery that is closer to the starter will reduce electrical resistance. This is located on the passenger side, in the rear of the engine compartment.
3. Get the vehicles close enough so the jumper cables can reach, but be sure the vehicles are not touching each other. If they are, it could cause an unwanted ground connection. You would not be able to start your vehicle, and the bad grounding could damage the electrical systems.

   To avoid the possibility of the vehicles rolling, set the parking brake firmly on both vehicles involved in the jump start procedure. Put the automatic transmission in P (Park) before setting the parking brake. If you have a four-wheel-drive vehicle, be sure the transfer case is in a drive gear, not in N (Neutral).

Caution

If any accessories are left on or plugged in during the jump starting procedure, they could be damaged. The repairs would not be covered by the vehicle warranty. Whenever possible, turn off or unplug all accessories on either vehicle when jump starting.

4. Turn the ignition off on both vehicles. Unplug unnecessary accessories plugged into the accessory power outlets. Turn off the radio and all the lamps that are not needed. This will avoid sparks and help save both batteries. And it could save the radio!

5. Open the hood on the other vehicle and locate the positive (+) and negative (−) terminal locations on that vehicle.

   The positive (+) terminal is under a red plastic cover at the positive battery post. To uncover the positive (+) terminal, open the red plastic cover.

   For more information on the location of the remote positive (+) and remote negative (−) terminals, see *Engine Compartment Overview* ⇨ *320*.

⚠ Warning

An electric fan can start up even when the engine is not running and can injure you. Keep hands, clothing, and tools away from any underhood electric fan.

⚠ Warning

Using a match near a battery can cause battery gas to explode. People have been hurt doing this, and some have been blinded. Use a flashlight if you need more light.

Battery fluid contains acid that can burn you. Do not get it on you. If you accidentally get it in your eyes or on your skin, flush the place with water and get medical help immediately.

⚠ Warning

Fans or other moving engine parts can injure you badly. Keep your hands away from moving parts once the engine is running.

6. Check that the jumper cables do not have loose or missing insulation. If they do, you could get a shock. The vehicles could be damaged too.

   Before you connect the cables, here are some basic things you should know. Positive (+) will go to positive (+) or to a remote positive (+) terminal if the vehicle has one. Negative (−) will go to a heavy, unpainted metal engine part or to a remote negative (−) terminal if the vehicle has one.

   Do not connect positive (+) to negative (−) or you will get a short that would damage the battery and maybe other parts too. And do not connect the negative (−) cable to the

negative (−) terminal on the dead battery because this can cause sparks.

7. Connect one end of the red positive (+) cable to the remote positive (+) terminal of the vehicle with the discharged battery.
8. Do not let the other end touch metal. Connect it to the positive (+) terminal of the good battery. Use a remote positive (+) terminal if the vehicle has one.
9. Connect one end of the black negative (−) cable to the negative (−) terminal of the good battery. Use a remote negative (−) terminal if the vehicle has one.

   Do not let the other end touch anything until the next step.
10. Connect the other end of the negative (−) cable to the remote negative (−) terminal to the discharged battery.
11. Start the vehicle with the good battery and run the engine for a while.
12. Try to start the vehicle that had the dead battery. If it will not start after a few tries, it probably needs service.

Caution

If the jumper cables are connected or removed in the wrong order, electrical shorting may occur and damage the vehicle. The repairs would not be covered by the vehicle warranty. Always connect and remove the jumper cables in the correct order, making sure that the cables do not touch each other or other metal.

Jumper Cable Removal

Reverse the sequence exactly when removing the jumper cables.

After starting the disabled vehicle and removing the jumper cables, allow it to idle for several minutes.

Towing the Vehicle

Caution

Incorrectly towing a disabled vehicle may cause damage. The damage would not be covered by the vehicle warranty. Do not lash or hook to suspension components. Use the proper straps around the tires to secure the vehicle. Do not drag a locked wheel/tire while loading the vehicle. Do not use a sling type lift to tow the vehicle. This could damage the vehicle.

GM recommends a flatbed tow truck to transport a disabled vehicle. Use ramps to help reduce approach angles, if necessary. A towed vehicle should have its drive wheels off the ground. Contact Roadside Assistance or a professional towing service if the disabled vehicle must be towed.

Front Attachment Points

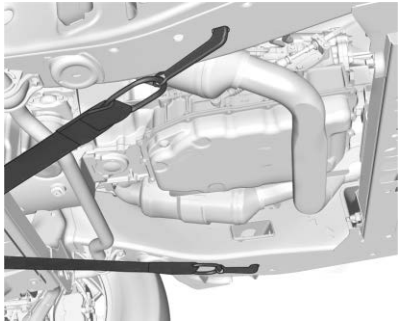

The vehicle is equipped with specific attachment points to be used to pull the vehicle onto a flatbed car carrier from a flat road surface. Do not use these attachment points to pull the vehicle from snow, mud or sand.

Recreational Vehicle Towing

Recreational vehicle towing means towing the vehicle behind another vehicle, such as a motor home. The two most common types of recreational vehicle towing are dinghy and dolly towing. Dinghy towing is towing the vehicle with all four wheels on the ground. Dolly towing is towing the vehicle with two wheels on the ground and two wheels on a dolly.

Here are some important things to consider before recreational vehicle towing:

- Before towing the vehicle, become familiar with the local laws that apply to recreational vehicle towing. These laws may vary by region.
- The towing capacity of the towing vehicle. Read the tow vehicle manufacturer's recommendations.
- How far the vehicle can be towed. Some vehicles have restrictions on how far and how long the vehicle can be towed.
- Whether the vehicle has the proper towing equipment. See your dealer or trailering professional for additional advice and equipment recommendations.
- Whether the vehicle is ready to be towed. Just as preparing the vehicle for a long trip, make sure the vehicle is prepared to be towed.

Follow the tow vehicle manufacturer’s instructions.

Caution

Use of a shield mounted in front of the vehicle grille could restrict airflow and cause damage to the transmission. The repairs would not be covered by the vehicle warranty. If using a shield, only use one that attaches to the towing vehicle.

Dinghy Towing (Two-Wheel-Drive Vehicles and Vehicles with a Single-Speed Transfer Case)

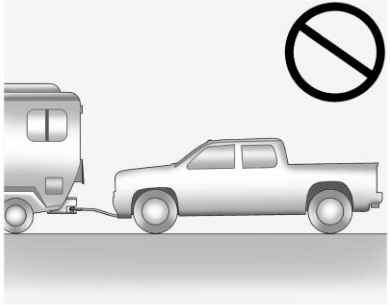

Caution

If a vehicle with two-wheel drive or a single-speed transfer case is towed with all four wheels on the ground, the drivetrain components could be damaged. The repairs would not be covered by the vehicle warranty.

Two-wheel-drive vehicles and vehicles with a single-speed transfer case should not be towed with all four wheels on the ground.

Dinghy Towing (Vehicles with a Two-Speed Transfer Case)

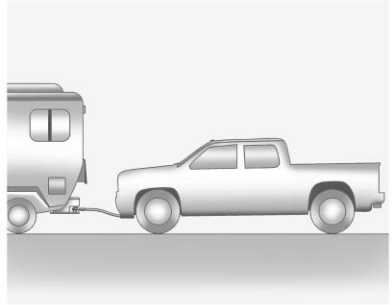

Only dinghy tow four-wheel-drive vehicles with a two-speed transfer case that have an N (Neutral) and a 4 ↓ (Four-Wheel Drive Low) setting.

⚠ Warning

Shifting a four-wheel-drive vehicle's transfer case into N (Neutral) can allow the vehicle to move even if the transmission is in P (Park). You or others could be injured. Set the parking brake and use wheel blocks before shifting the transfer case to N (Neutral).

To dinghy tow:

1. Position the vehicle being towed behind the tow vehicle, facing forward and on a level surface.
2. Securely attach the vehicle being towed to the tow vehicle.
3. Start the engine.
4. Shift the transfer case to N (Neutral). See “Shifting into N (Neutral)” under *Four-Wheel Drive* ⇨ *238*.

5. With the engine running, release the parking brake and verify that the transfer case is in N (Neutral) by shifting the transmission to D (Drive) and then to R (Reverse). There should be no movement while shifting the transmission.
6. Shift the transmission to D (Drive).
7. If equipped with an ignition key, turn the ignition to ACC/ACCESSORY. If equipped with Keyless Access, turn the engine off. Disregard the Shift to P (Park) DIC message. See *Ignition Positions (Key Access)* ⇨ *219* or *Ignition Positions (Keyless Access)* ⇨ *221*.

⚠ Warning

To avoid death, serious injury, or property damage, before dinghy towing the vehicle, always disconnect and secure the

(Continued)

Warning (Continued)

negative battery cable and cover the negative battery post and cable with a non-conductive material. If the battery is left connected or the battery cable contacts the post, the Electric Parking Brake may activate during towing, which could cause a crash.

8. Disconnect the negative (–) battery cable. See “Negative Battery Cable Disconnection” in *Battery - North America* ⇨ *341*.
9. Shift the transmission to P (Park).

Caution

If the steering column is locked, vehicle damage may occur.

10. Move the steering wheel to make sure the steering column is unlocked.
11. If the vehicle has an ignition key, keep it in the towed vehicle in ACC/ACCESSORY to prevent the steering column from locking. If the vehicle is equipped with Keyless Access, keep the RKE transmitter outside of the vehicle and manually lock the doors. Access the vehicle by using the key in the door lock. See *Door Locks* ⇨ *45*.

Disconnecting the Towed Vehicle

Before disconnecting from the tow vehicle:

1. Park on a level surface. Secure the vehicle with wheel blocks.
2. Re-connect the negative (–) battery. See *Battery - North America* ⇨ *341*.
3. Turn on the ignition with the engine off. For vehicles with a key, turn the ignition to ON/RUN with the engine off. If the

vehicle is equipped with Keyless Access, with your foot off the brake pedal, press and hold ENGINE START/STOP for five seconds until the green light comes on in the button. See *Ignition Positions (Key Access)* ⇨ *219* or *Ignition Positions (Keyless Access)* ⇨ *221*.

4. Set the parking brake. See *Electric Parking Brake* ⇨ *244*.
5. Disconnect from the tow vehicle.
6. Shift the transmission to N (Neutral).
7. Shift the transfer case to 2 ↑ (Two-Wheel Drive High). When the shift to 2 ↑ (Two-Wheel Drive High) is complete, the light in the instrument cluster will stop flashing and stay lit. See *Four-Wheel-Drive Light* ⇨ *155*.
8. Start the engine. Check that the vehicle is in 2 ↑ (Two-Wheel Drive High) by starting the engine and shifting the transmission to D (Drive) and then to R (Reverse). There should be movement of the vehicle while shifting.
9. Shift the transmission to P (Park) and turn off the ignition.
10. Release the parking brake and remove the wheel blocks.
11. Reset any lost presets.

    The outside temperature display will default to 0 °C (32 °F) but will reset with normal usage.

Dolly Towing

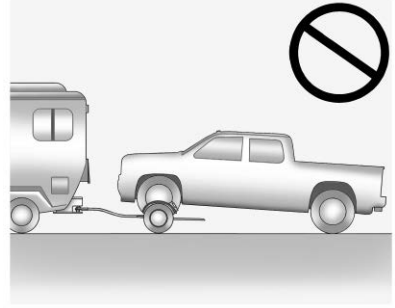

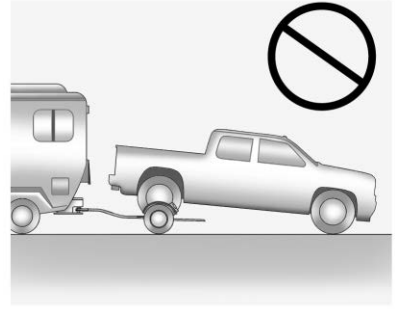

Caution

Do not tow this vehicle with two wheels on the ground, or vehicle damage could occur. This damage would not be covered by the vehicle warranty.

Dolly towing this vehicle is not allowed with either the front or the rear tires on the ground for two-wheel drive or four-wheel drive, regardless of transfer case.

Appearance Care

Exterior Care

Locks

Locks are lubricated at the factory. Use a de-icing agent only when absolutely necessary, and have the locks greased after using. See *Recommended Fluids and Lubricants* ⇨ *429*.

Washing the Vehicle

To preserve the vehicle's finish, wash it often and out of direct sunlight.

⚠ Warning

Do not power wash any part of the vehicle’s interior, including the vinyl floor covering. This could damage safety and other systems in the vehicle, which would not be covered by the vehicle warranty.

Caution

Do not use petroleum-based, acidic, or abrasive cleaning agents as they can damage the vehicle's paint, metal, or plastic parts. If damage occurs, it would not be covered by the vehicle warranty. Approved cleaning products can be obtained from your dealer. Follow all manufacturer directions regarding correct product usage, necessary safety precautions, and appropriate disposal of any vehicle care product.

Caution

Avoid using high-pressure washes closer than 30 cm (12 in) to the surface of the vehicle. Use of power washers exceeding 8,274 kPa (1,200 psi) can result in damage or removal of paint and decals.

Caution

Do not power wash any component under the hood that has this symbol.

This could cause damage that would not be covered by the vehicle warranty.

If using an automatic car wash, follow with the car wash instructions. The windshield wiper and rear window wiper, if equipped, must be turned off. Remove any accessories that may be damaged or interfere with the car wash equipment.

See *Power Assist Steps* ⇨ *54* for cleaning information.

Rinse the vehicle well, before washing and after, to remove all cleaning agents completely. If they are allowed to dry on the surface, they could stain.

Dry the finish with a soft, clean chamois or an all-cotton towel to avoid surface scratches and water spotting.

Finish Care

Application of aftermarket clearcoat sealant/wax materials is not recommended. If painted surfaces are damaged, see your dealer to have the damage assessed and repaired. Foreign materials such as calcium chloride and other salts, ice melting agents, road oil and tar, tree sap, bird droppings, chemicals from industrial chimneys, etc., can damage the vehicle's finish if they remain on painted surfaces. Wash the vehicle as soon as possible. If necessary, use non-abrasive cleaners that are marked safe for painted surfaces to remove foreign matter.

Occasional hand waxing or mild polishing should be done to remove residue from the paint finish. See your dealer for approved cleaning products.

Do not apply waxes or polishes to uncoated plastic, vinyl, rubber, decals, simulated wood, or flat paint as damage can occur.

Caution

Machine compounding or aggressive polishing on a basecoat/clearcoat paint finish may damage it. Use only non-abrasive waxes and polishes that are made for a basecoat/clearcoat paint finish on the vehicle.

To keep the paint finish looking new, keep the vehicle garaged or covered whenever possible.

Protecting Exterior Bright Metal Moldings

Caution

Failure to clean and protect the bright metal moldings can result in a hazy white finish or pitting. This damage would not be covered by the vehicle warranty.

The bright metal moldings on the vehicle are aluminum, chrome or stainless steel. To prevent damage always follow these cleaning instructions:

- Be sure the molding is cool to the touch before applying any cleaning solution.
- Use only approved cleaning solutions for aluminum, chrome or stainless steel. Some cleaners are highly acidic or contain alkaline substances and can damage the moldings.
- Always dilute a concentrated cleaner according to the manufacturer's instructions.
- Do not use cleaners that are not intended for automotive use.
- Use a nonabrasive wax on the vehicle after washing to protect and extend the molding finish.

Spray-In Bedliner Care

A spray-in bedliner is a permanent coating that bonds to the truck bed and cannot be removed. Promptly rinse the bedliner surface following a chemical spill to avoid permanent damage.

Spray-in bedliners can fade from oxidation, road dirt, heavy-duty hauling, and hard water stains. Clean it periodically by washing off the loose dirt and using a mild detergent. To restore the original appearance, apply the bedliner conditioner available through your dealer.

Caution

Using silicone-based products may damage the bedliner, reduce the slip-resistant texture, and attract dirt.

Cleaning Exterior Lamps/ Lenses, Emblems, Decals and Stripes

Use only lukewarm or cold water, a soft cloth, and a car washing soap to clean exterior lamps, lenses, emblems, decals and stripes. Follow instructions under "Washing the Vehicle" previously in this section.

Lamp covers are made of plastic, and some have a UV protective coating. Do not clean or wipe them while they are dry.

Do not use any of the following on lamp covers:

- Abrasive or caustic agents.

- Washer fluids and other cleaning agents in higher concentrations than suggested by the manufacturer.
- Solvents, alcohols, fuels, or other harsh cleaners.
- Ice scrapers or other hard items.
- Aftermarket appearance caps or covers while the lamps are illuminated, due to excessive heat generated.

Caution

Failure to clean lamps properly can cause damage to the lamp cover that would not be covered by the vehicle warranty.

Caution

Using wax on low gloss black finish stripes can increase the gloss level and create a

(Continued)

Caution (Continued)

non-uniform finish. Clean low gloss stripes with soap and water only.

Air Intakes

Clear debris from the air intakes, between the hood and windshield, when washing the vehicle.

Windshield and Wiper Blades

Clean the outside of the windshield with glass cleaner.

Clean rubber blades using a lint-free cloth or paper towel soaked with windshield washer fluid or a mild detergent. Wash the windshield thoroughly when cleaning the blades. Bugs, road grime, sap, and a buildup of vehicle wash/wax treatments may cause wiper streaking.

Replace the wiper blades if they are worn or damaged. Damage can be caused by extreme dusty conditions, sand, salt, heat, sun, snow, and ice.

Weatherstrips

Apply weatherstrip lubricant on weatherstrips to make them last longer, seal better, and not stick or squeak. Lubricate weatherstrips once a year. Hot, dry climates may require more frequent application. Black marks from rubber material on painted surfaces can be removed by rubbing with a clean cloth. See *Recommended Fluids and Lubricants* ⇨ *429*.

Tires

Use a stiff brush with tire cleaner to clean the tires.

Caution

Using petroleum-based tire dressing products on the vehicle may damage the paint finish and/

(Continued)

Caution (Continued)

or tires. When applying a tire dressing, always wipe off any overspray from all painted surfaces on the vehicle.

Wheels and Wheel Trim

Use a soft, clean cloth with mild soap and water to clean the wheels. After rinsing thoroughly with clean water, dry with a soft, clean towel. A wax may then be applied.

Caution

Chrome wheels and chrome wheel trim may be damaged if the vehicle is not washed after driving on roads that have been sprayed with magnesium chloride or calcium chloride. These are used on roads for conditions such as dust and ice. Always wash the chrome with soap and water after exposure.

Caution

To avoid surface damage on wheels and wheel trim, do not use strong soaps, chemicals, abrasive polishes, cleaners, or brushes. Use only GM approved cleaners. Do not drive the vehicle through an automatic car wash that uses silicon carbide tire/wheel cleaning brushes. Damage could occur and the repairs would not be covered by the vehicle warranty.

Brake System

Visually inspect brake lines and hoses for proper hook-up, binding, leaks, cracks, chafing, etc. Inspect disc brake pads for wear and rotors for surface condition. Inspect drum brake linings/shoes for wear or cracks. Inspect all other brake parts.

Steering, Suspension, and Chassis Components

Visually inspect steering, suspension, and chassis components for damaged, loose, or missing parts or signs of wear at least once a year.

Inspect power steering for proper attachment, connections, binding, cracks, chafing, etc.

Visually check constant velocity joint boots and axle seals for leaks.

Control arm ball joints on 1500 series vehicles are maintenance-free.

Caution

Lubrication of applicable suspension points should not be done unless the temperature is −12 °C (10 °F) or higher, or damage could result.

Body Component Lubrication

Lubricate all key lock cylinders, hood hinges, liftgate hinges, and the steel fuel door hinge unless the components are plastic. Applying silicone grease on weatherstrips with a clean cloth will make them last longer, seal better, and not stick or squeak.

Underbody Maintenance

At least twice a year, spring and fall, use plain water to flush any corrosive materials from the underbody. Take care to thoroughly clean any areas where mud and other debris can collect. If equipped with power assist steps, extend them and then use a high pressure wash to clean all joints and gaps.

Do not directly power wash the transfer case and/or front/rear axle output seals. High pressure water can overcome the seals and contaminate the fluid. Contaminated fluid will decrease the life of the transfer case and/or axles and should be replaced.

Sheet Metal Damage

If the vehicle is damaged and requires sheet metal repair or replacement, make sure the body repair shop applies anti-corrosion material to parts repaired or replaced to restore corrosion protection.

Original manufacturer replacement parts will provide the corrosion protection while maintaining the vehicle warranty.

Finish Damage

Quickly repair minor chips and scratches with touch-up materials available from your dealer to avoid corrosion. Larger areas of finish damage can be corrected in your dealer's body and paint shop.

Chemical Paint Spotting

Airborne pollutants can fall upon and attack painted vehicle surfaces causing blotchy, ring-shaped discolorations, and small, irregular dark spots etched into the paint surface. Refer to “Finish Care” previously in this section.

Interior Care

To prevent dirt particle abrasions, regularly clean the vehicle's interior. Immediately remove any soils. Newspapers or dark garments can transfer color to the vehicle’s interior.

Use a soft bristle brush to remove dust from knobs and crevices on the instrument cluster. Using a mild soap solution, immediately remove hand lotions, sunscreen, and insect repellent from all interior surfaces or permanent damage may result.

Use cleaners specifically designed for the surfaces being cleaned to prevent permanent damage. Apply cleaners directly to the cleaning cloth. Do not spray cleaners on any switches or controls. Remove cleaners quickly.

Before using cleaners, read and follow all safety instructions on the label. While cleaning the interior, open the doors and windows to get proper ventilation.

To prevent damage, do not clean the interior using the following cleaners or techniques:

- Never use a razor or any other sharp object to remove soil from any interior surface.
- Never use a brush with stiff bristles.
- Never rub any surface aggressively or with too much pressure.
- Do not use laundry detergents or dishwashing soaps with degreasers. For liquid cleaners, use approximately 20 drops per 3.8 L (1 gal) of water. A concentrated soap solution will create streaks and attract dirt. Do not use solutions that contain strong or caustic soap.
- Do not heavily saturate the upholstery when cleaning.
- Do not use solvents or cleaners containing solvents.

Interior Glass

To clean, use a terry cloth fabric dampened with water. Wipe droplets left behind with a clean dry cloth. If necessary, use a commercial glass cleaner after cleaning with plain water.

Caution

To prevent scratching, never use abrasive cleaners on automotive glass. Abrasive cleaners or aggressive cleaning may damage the rear window defogger.

Cleaning the windshield with water during the first three to six months of ownership will reduce tendency to fog.

Speaker Covers

Vacuum around a speaker cover gently, so that the speaker will not be damaged. Clean spots with water and mild soap.

Coated Moldings

Coated moldings should be cleaned.

- When lightly soiled, wipe with a sponge or soft, lint-free cloth dampened with water.
- When heavily soiled, use warm soapy water.

Fabric/Carpet/Suede

Start by vacuuming the surface using a soft brush attachment. If a rotating vacuum brush attachment is being used, only use it on the floor carpet. Before cleaning, gently remove as much of the soil as possible:

- Gently blot liquids with a paper towel. Continue blotting until no more soil can be removed.
- For solid soils, remove as much as possible prior to vacuuming.

To clean:

1. Saturate a clean, lint-free colorfast cloth with water. Microfiber cloth is recommended to prevent lint transfer to the fabric or carpet.

2. Remove excess moisture by gently wringing until water does not drip from the cleaning cloth.
3. Start on the outside edge of the soil and gently rub toward the center. Fold the cleaning cloth to a clean area frequently to prevent forcing the soil in to the fabric.
4. Continue gently rubbing the soiled area until there is no longer any color transfer from the soil to the cleaning cloth.
5. If the soil is not completely removed, use a mild soap solution followed only by plain water.

If the soil is not completely removed, it may be necessary to use a commercial upholstery cleaner or spot lifter. Test a small hidden area for colorfastness before using a commercial upholstery cleaner or spot lifter. If ring formation occurs, clean the entire fabric or carpet.

After cleaning use a paper towel to blot excess moisture.

Cleaning High Gloss Surfaces and Vehicle Information and Radio Displays

Use a microfiber cloth on high gloss surfaces or vehicle displays. First, use a soft bristle brush to remove dirt that can scratch the surface. Then gently clean by rubbing with a microfiber cloth. Never use window cleaners or solvents. Periodically hand wash the microfiber cloth separately, using mild soap. Do not use bleach or fabric softener. Rinse thoroughly and air dry before next use.

Caution

Do not attach a device with a suction cup to the display. This may cause damage and would not be covered by the vehicle warranty.

Instrument Panel, Leather, Vinyl, Other Plastic Surfaces, Low Gloss Paint Surfaces and Natural Open Pore Wood Surfaces

Use a soft microfiber cloth dampened with water to remove dust and loose dirt. For a more thorough cleaning, use a soft microfiber cloth dampened with a mild soap solution.

Caution

Soaking or saturating leather, especially perforated leather, as well as other interior surfaces, may cause permanent damage. Wipe excess moisture from these surfaces after cleaning and allow them to dry naturally. Never use heat, steam, or spot removers. Do not use cleaners that contain silicone or wax-based products. Cleaners containing these solvents can permanently change

(Continued)

Caution (Continued)

the appearance and feel of leather or soft trim, and are not recommended.

Do not use cleaners that increase gloss, especially on the instrument panel. Reflected glare can decrease visibility through the windshield under certain conditions.

Caution

Use of air fresheners may cause permanent damage to plastics and painted surfaces. If an air freshener comes in contact with any plastic or painted surface in the vehicle, blot immediately and clean with a soft cloth dampened with a mild soap solution. Damage caused by air fresheners would not be covered by the vehicle warranty.

Care of Seat Belts

Keep belts clean and dry.

⚠ Warning

Do not bleach or dye seat belt webbing. It may severely weaken the webbing. In a crash, they might not be able to provide adequate protection. Clean and rinse seat belt webbing only with mild soap and lukewarm water. Allow the webbing to dry.

Floor Mats

⚠ Warning

If a floor mat is the wrong size or is not properly installed, it can interfere with the pedals. Interference with the pedals can cause unintended acceleration and/or increased stopping distance which can cause a crash

(Continued)

Warning (Continued)

and injury. Make sure the floor mat does not interfere with the pedals.

Use the following guidelines for proper floor mat usage:

- The original equipment floor mats were designed for your vehicle. If the floor mats need replacing, it is recommended that GM certified floor mats be purchased. Non-GM floor mats may not fit properly and may interfere with the pedals. Always check that the floor mats do not interfere with the pedals.
- Do not use a floor mat if the vehicle is not equipped with a floor mat retainer on the driver side floor.
- Use the floor mat with the correct side up. Do not turn it over.
- Do not place anything on top of the driver side floor mat.

- Use only a single floor mat on the driver side.
- Do not place one floor mat on top of another.

Removing and Replacing the Floor Mats

Pull up on the rear of the driver side floor mat to unlock each retainer and remove.

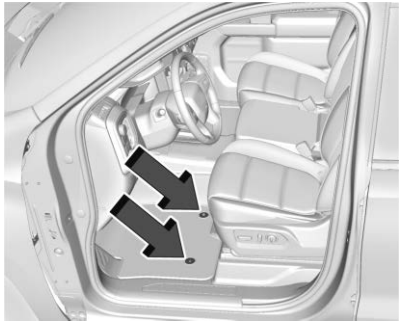

Reinstall by lining up the floor mat retainer openings over the carpet retainers and snapping into position.

Make sure the floor mat is properly secured in place.

Verify the floor mat does not interfere with the pedals.

Service and Maintenance

General Information
General Information 417

Maintenance Schedule
Maintenance Schedule 419

Special Application Services
Special Application Services 425

Additional Maintenance and Care
Additional Maintenance and Care 426

Recommended Fluids, Lubricants, and Parts
Recommended Fluids and Lubricants 429
Maintenance Replacement Parts 431

Maintenance Records
Maintenance Records 432

General Information

This maintenance section applies to vehicles with a gasoline engine. For diesel engine vehicles, see "Maintenance Schedule" in the Duramax diesel supplement.

Your vehicle is an important investment. This section describes the required maintenance for the vehicle. Follow this schedule to help protect against major repair expenses resulting from neglect or inadequate maintenance. It may also help to maintain the value of the vehicle if it is sold. It is the responsibility of the owner to have all required maintenance performed.

Your dealer has trained technicians who can perform required maintenance using genuine replacement parts. They have up-to-date tools and equipment for fast and accurate diagnostics. Many dealers have extended evening and Saturday hours, courtesy transportation, and online scheduling to assist with service needs.

Your dealer recognizes the importance of providing competitively priced maintenance and repair services. With trained technicians, the dealer is the place for routine maintenance such as oil changes and tire rotations and additional maintenance items like tires, brakes, batteries, and wiper blades.

Caution

Damage caused by improper maintenance can lead to costly repairs and may not be covered by the vehicle warranty. Maintenance intervals, checks, inspections, recommended fluids, and lubricants are important to keep the vehicle in good working condition.

Do not have chemical flushes that are not approved by GM performed on the vehicle. The use of flushes, solvents, cleaners, or lubricants that are not

(Continued)

Caution (Continued)

approved by GM could damage the vehicle, requiring expensive repairs that are not covered by the vehicle warranty.

The Tire Rotation and Required Services are the responsibility of the vehicle owner. It is recommended to have your dealer perform these services every 12 000 km/7,500 mi. Proper vehicle maintenance helps to keep the vehicle in good working condition, improves fuel economy, and reduces vehicle emissions.

Because of the way people use vehicles, maintenance needs vary. There may need to be more frequent checks and services. The Additional Required Services - Normal are for vehicles that:

- Carry passengers and cargo within recommended limits on the Tire and Loading Information label. See *Vehicle Load Limits* ⇨ *211*.
- Are driven on reasonable road surfaces within legal driving limits.
- Use the recommended fuel. See *Recommended Fuel (Except 6.2L V8 Engine)* ⇨ *275* or *Recommended Fuel (6.2L V8 Engine)* ⇨ *275*.

Refer to the information in the Maintenance Schedule Additional Required Services - Normal chart.

The Additional Required Services - Severe are for vehicles that are:

- Mainly driven in heavy city traffic in hot weather
- Mainly driven in hilly or mountainous terrain
- Frequently towing a trailer
- Used for high speed or competitive driving
- Used for taxi, police, or delivery service

Refer to the information in the Maintenance Schedule Additional Required Services - Severe chart.

⚠ Warning

Performing maintenance work can be dangerous and can cause serious injury. Perform maintenance work only if the required information, proper tools, and equipment are available.
If they are not, see your dealer to have a trained technician do the work. See *Doing Your Own Service Work* ⇨ *318*.

Maintenance Schedule

Owner Checks and Services

At Each Fuel Stop

- Check the engine oil level. See *Engine Oil* ⇨ *325*.

Once a Month

- Check the tire inflation pressures, including the spare. See *Tire Pressure* ⇨ *371*.
- Inspect the tires for wear. See *Tire Inspection* ⇨ *379*.
- Check the windshield washer fluid level. See *Washer Fluid* ⇨ *338*.

Engine Oil Change

When the CHANGE ENGINE OIL SOON message displays, have the engine oil and filter changed within the next 1 000 km/600 mi. If driven under the best conditions, the engine oil life system may not indicate the need for vehicle service for up to a year. The engine oil and filter must be changed at least once a year and the oil life system must be reset. Your trained dealer technician can perform this work. If the engine oil life system is reset accidentally, service the vehicle within 5 000 km/3,000 mi since the last service. Reset the oil life system when the oil is changed. See *Engine Oil Life System* ⇨ *327*.

Engine Air Filter Change

When the REPLACE AT NEXT OIL CHANGE message displays, the engine air filter should be replaced at the next engine oil change. When the REPLACE ENGINE AIR FILTER SOON message displays, the engine air filter should be replaced at the earliest convenience. Reset the engine air filter life system after the engine air filter is replaced. See *Engine Air Filter Life System* ⇨ *329*.

Passenger Compartment Air Filter

The passenger compartment air filter removes dust, pollen, and other airborne irritants from outside air that is pulled into the vehicle. The filter should be replaced as part of routine scheduled maintenance. Inspect the passenger compartment air filter every 36 000 km/ 22,500 miles or two years, whichever comes first. Replace if necessary. More frequent replacement may be needed if the vehicle is driven in areas with heavy traffic, areas with poor air quality, or areas with high dust levels. Replacement may also be needed if there is a reduction in air flow, excessive window fogging, or odors.

Extended Idle Use

When the vehicle is used in a way that requires extended idle time, one hour of use shall be deemed the same as 53 km (33 mi). See *Driver Information Center (DIC) (Midlevel and Uplevel)* ⇨ *162* or *Driver Information Center (DIC) (Base Level)* ⇨ *161* for hourmeter.

Air Conditioning Desiccant (Replace Every Seven Years)

The air conditioning system requires maintenance every seven years. This service requires replacement of

the desiccant to help the longevity and efficient operation of the air conditioning system. This service can be complex. See your dealer.

Tire Rotation and Required Services Every 12 000 km/ 7,500 mi

Rotate the tires, if recommended for the vehicle, and perform the following services. See *Tire Rotation* ⇨ *380*.

- Check engine oil level and oil life percentage. If needed, change engine oil and filter, and reset oil life system. See *Engine Oil* ⇨ *325* and *Engine Oil Life System* ⇨ *327*.
- If equipped with the engine air filter life system, check the air filter life percentage. If necessary, replace the engine air filter and reset the engine air filter life system. See *Engine Air Filter Life System* ⇨ *329*. If the vehicle is not equipped with the engine air filter life system, inspect the engine air cleaner filter. See *Engine Air Cleaner/ Filter* ⇨ *330*.
- Check engine coolant level. See *Cooling System* ⇨ *331*.
- Check windshield washer fluid level. See *Washer Fluid* ⇨ *338*.
- Check tire inflation pressures, including the spare. See *Tire Pressure* ⇨ *371*.
- Inspect tire wear. See *Tire Inspection* ⇨ *379*.
- Visually check for fluid leaks.
- Inspect brake system. See *Exterior Care* ⇨ *407*.
- Visually inspect steering, suspension, and chassis components for damage, including cracks or tears in the rubber boots, loose or missing parts, or signs of wear at least once a year. See *Exterior Care* ⇨ *407*. Lubricate the suspension and steering components at least every other oil change. (If equipped with grease fittings)
- Inspect power steering for proper attachment, connections, binding, leaks, cracks, chafing, etc.
- Visually inspect drive shafts for excessive wear, lubricant leaks or damage including: tube dents, cracks, constant velocity joint or universal joint looseness, cracked or missing boots, loose or missing boot clamps, center bearing excessive looseness, missing or loose fasteners.
- Check restraint system components. See *Safety System Check* ⇨ *85*.
- Visually inspect fuel system for damage or leaks.
- Visually inspect exhaust system and nearby heat shields for loose or damaged parts.
- Lubricate body components. See *Exterior Care* ⇨ *407*.
- Check starter switch. See *Starter Switch Check* ⇨ *347*.

- Check ignition transmission lock. See *Ignition Transmission Lock Check* ⇨ *347*.
- Check parking brake and automatic transmission park mechanism. See *Park Brake and P (Park) Mechanism Check* ⇨ *347*.
- Check accelerator pedal for damage, high effort, or binding. Replace if needed.
- Visually inspect gas strut for signs of wear, cracks, or other damage. Check the hold open ability of the strut. If the hold open is low, service the gas strut. See *Gas Strut(s)* ⇨ *349*.
- Inspect sunroof track and seal, if equipped. See *Sunroof* ⇨ *66*.
- Verify spare tire key lock operation and lubricate as needed. See *Tire Changing* ⇨ *389*.
- Verify the spare tire is tightly stowed under the vehicle. Tighten as needed. See "Storing a Flat or Spare Tire and Tools" in *Tire Changing* ⇨ *389*.
- Visually inspect the spare tire to ensure that it is tightly stowed under the vehicle. Push, pull, and try to turn the tire. If the spare tire moves, tighten as necessary. See*Tire Changing* ⇨ *389*.

Additional Required Services

Maintenance Schedule Additional Required Services - Normal	12 000 km/7,500 mi	24 000 km/15,000 mi	36 000 km/22,500 mi	48 000 km/30,000 mi	60 000 km/37,500 mi	72 000 km/45,000 mi	84 000 km/52,500 mi	96 000 km/60,000 mi	108 000 km/67,500 mi	120 000 km/75,000 mi	132 000 km/82,500 mi	144 000 km/90,000 mi	156 000 km/97,500 mi	168 000 km/105,000 mi	180 000 km/112,500 mi	192 000 km/120,000 mi	204 000 km/127,500 mi	216 000 km/135,000 mi	228 000 km/142,500 mi	240 000 km/150,000 mi
Rotate tires and perform Required Services. Check engine oil level and oil life percentage. Change engine oil and filter, if needed. Check engine air filter life percentage and status. Change engine air filter, if needed.	✓	✓	✓	✓	✓	✓	✓	✓	✓	✓	✓	✓	✓	✓	✓	✓	✓	✓	✓	✓
Replace passenger compartment air filter. (1)			✓			✓			✓			✓			✓			✓		
If the vehicle is not equipped with the engine air filter life system, replace engine air cleaner filter. (2)						✓						✓						✓		
Inspect evaporative control system. (3)						✓						✓						✓		
Replace spark plugs. Inspect spark plug wires. (Except 2.7L L4 Turbo Engine)													✓							
Replace spark plugs. Inspect spark plug wires. (2.7L L4 Turbo Engine Only)								✓								✓				
Change transfer case fluid, if equipped with 4WD. (4)													✓							
Drain and fill engine cooling system. (5)																				✓
Visually inspect accessory drive belts. (6)																				✓
Replace brake fluid. (7)																				
Replace windshield wiper blades. (8)		✓		✓		✓		✓		✓		✓		✓		✓		✓		✓
Replace hood and/or body lift support gas struts.										✓										✓

Footnotes — Maintenance Schedule Additional Required Services - Normal

(1) Or every two years, whichever comes first. More frequent replacement may be needed if the vehicle is driven in areas with heavy traffic, poor air quality, areas with high dust levels or are sensitive to environmental allergens. Filter replacement may also be needed if you notice reduced airflow, windows fogging up, or odors. Your local GM Service location can help you determine when it is the right time to replace your filter.

(2) Or every four years, whichever comes first. If driving in dusty conditions, inspect the filter at each oil change or more often as needed. See *Engine Air Cleaner/Filter* ⇨ *330*.

(3) Visually check all fuel and vapor lines and hoses for proper attachment, connection, routing, and condition.

(4) Do not directly power wash the transfer case and/or front/rear axle output seals. High pressure water can overcome the seals and contaminate the fluid. Contaminated fluid will decrease the life of the transfer case and/or drive axles and should be replaced.

(5) Or every five years, whichever comes first. See *Cooling System* ⇨ *331*.

(6) Or every 10 years, whichever comes first. Inspect for fraying, excessive cracking, or damage; replace, if needed.

(7) Replace brake fluid every five years. See *Brake Fluid* ⇨ *340*.

(8) Or every 12 months, whichever comes first. See *Wiper Blade Replacement* ⇨ *348*.

Maintenance Schedule Additional Required Services - Severe	12 000 km/7,500 mi	24 000 km/15,000 mi	36 000 km/22,500 mi	48 000 km/30,000 mi	60 000 km/37,500 mi	72 000 km/45,000 mi	84 000 km/52,500 mi	96 000 km/60,000 mi	108 000 km/67,500 mi	120 000 km/75,000 mi	132 000 km/82,500 mi	144 000 km/90,000 mi	156 000 km/97,500 mi	168 000 km/105,000 mi	180 000 km/112,500 mi	192 000 km/120,000 mi	204 000 km/127,500 mi	216 000 km/135,000 mi	228 000 km/142,500 mi	240 000 km/150,000 mi
Rotate tires and perform Required Services. Check engine oil level and oil life percentage. Change engine oil and filter, if needed. Check engine air filter life percentage and status. Change engine air filter, if needed.	✓	✓	✓	✓	✓	✓	✓	✓	✓	✓	✓	✓	✓	✓	✓	✓	✓	✓	✓	✓
Replace passenger compartment air filter. (1)			✓			✓			✓			✓			✓			✓		
If the vehicle is not equipped with the engine air filter life system, replace engine air cleaner filter. (2)						✓						✓						✓		
Inspect evaporative control system. (3)						✓						✓						✓		
Replace spark plugs. Inspect spark plug wires. (Except 2.7L L4 Turbo Engine)													✓							
Replace spark plugs. Inspect spark plug wires. (2.7L L4 Turbo Engine Only)								✓								✓				
Change automatic transmission fluid and filter.						✓						✓						✓		
Change transfer case fluid, if equipped with 4WD. (4)						✓						✓						✓		
Drain and fill engine cooling system. (5)																				✓
Visually inspect accessory drive belts. (6)																				✓
Replace brake fluid. (7)																				
Replace windshield wiper blades. (8)		✓		✓		✓		✓		✓		✓		✓		✓		✓		✓
Replace hood and/or body lift support gas struts.										✓										✓

Footnotes — Maintenance Schedule Additional Required Services - Severe

(1) Or every two years, whichever comes first. More frequent replacement may be needed if the vehicle is driven in areas with heavy traffic, poor air quality, areas with high dust levels or are sensitive to environmental allergens. Filter replacement may also be needed if you notice reduced airflow, windows fogging up, or odors. Your local GM Service location can help you determine when it is the right time to replace your filter.

(2) Or every four years, whichever comes first. If driving in dusty conditions, inspect the filter at each oil change or more often as needed. See *Engine Air Cleaner/Filter* ⇨ *330*.

(3) Visually check all fuel and vapor lines and hoses for proper attachment, connection, routing, and condition.

(4) Do not directly power wash the transfer case and/or front/rear axle output seals. High pressure water can overcome the seals and contaminate the fluid. Contaminated fluid will decrease the life of the transfer case and/or drive axles and should be replaced.

(5) Or every five years, whichever comes first. See *Cooling System* ⇨ *331*.

(6) Or every 10 years, whichever comes first. Inspect for fraying, excessive cracking, or damage; replace, if needed.

(7) Replace brake fluid every five years. See *Brake Fluid* ⇨ *340*.

(8) Or every 12 months, whichever comes first. See *Wiper Blade Replacement* ⇨ *348*.

Special Application Services

- Severe Commercial Use Vehicles Only: Lubricate chassis components every oil change.
- Have underbody flushing service performed. See "Underbody Maintenance" in *Exterior Care* ⇨ *407*.

Additional Maintenance and Care

Your vehicle is an important investment and caring for it properly may help to avoid future costly repairs. To maintain vehicle performance, additional maintenance services may be required.

It is recommended that your dealer perform these services — their trained dealer technicians know your vehicle best. Your dealer can also perform a thorough assessment with a multi-point inspection to recommend when your vehicle may need attention.

The following list is intended to explain the services and conditions to look for that may indicate services are required.

Battery

The 12-volt battery supplies power to start the engine and operate any additional electrical accessories.

- To avoid break-down or failure to start the vehicle, maintain a battery with full cranking power.
- Trained dealer technicians have the diagnostic equipment to test the battery and ensure that the connections and cables are corrosion-free.

Belts

- Belts may need replacing if they squeak or show signs of cracking or splitting.
- Trained dealer technicians have access to tools and equipment to inspect the belts and recommend adjustment or replacement when necessary.

Brakes

Brakes stop the vehicle and are crucial to safe driving.

- Signs of brake wear may include chirping, grinding, or squealing noises, or difficulty stopping.
- Trained dealer technicians have access to tools and equipment to inspect the brakes and recommend quality parts engineered for the vehicle.

Fluids

Proper fluid levels and approved fluids protect the vehicle's systems and components. See *Recommended Fluids and Lubricants* ⇨ *429* for GM approved fluids.

- Engine oil and windshield washer fluid levels should be checked at every fuel fill.
- Instrument cluster lights may come on to indicate that fluids may be low and need to be filled.

Hoses

Hoses transport fluids and should be regularly inspected to ensure that there are no cracks or leaks. With a multi-point inspection, your dealer can inspect the hoses and advise if replacement is needed.

Lamps

Properly working headlamps, taillamps, and brake lamps are important to see and be seen on the road.

- Signs that the headlamps need attention include dimming, failure to light, cracking, or damage. The brake lamps need to be checked periodically to ensure that they light when braking.
- With a multi-point inspection, your dealer can check the lamps and note any concerns.

Shocks and Struts

Shocks and struts help aid in control for a smoother ride.

- Signs of wear may include steering wheel vibration, bounce/sway while braking, longer stopping distance, or uneven tire wear.
- As part of the multi-point inspection, trained dealer technicians can visually inspect the shocks and struts for signs of leaking, blown seals, or damage, and can advise when service is needed.

Tires

Tires need to be properly inflated, rotated, and balanced. Maintaining the tires can save money and fuel, and can reduce the risk of tire failure.

- Signs that the tires need to be replaced include three or more visible treadwear indicators; cord or fabric showing through the rubber; cracks or cuts in the tread or sidewall; or a bulge or split in the tire.
- Trained dealer technicians can inspect and recommend the right tires. Your dealer can also provide tire/wheel balancing services to ensure smooth vehicle operation at all speeds. Your dealer sells and services name brand tires.

Vehicle Care

To help keep the vehicle looking like new, vehicle care products are available from your dealer. For information on how to clean and protect the vehicle's interior and exterior, see *Interior Care* ⇨ *412* and *Exterior Care* ⇨ *407*.

Wheel Alignment

Wheel alignment is critical for ensuring that the tires deliver optimal wear and performance.

- Signs that the alignment may need to be adjusted include pulling, improper vehicle handling, or unusual tire wear.
- Your dealer has the required equipment to ensure proper wheel alignment.

Windshield

For safety, appearance, and the best viewing, keep the windshield clean and clear.

- Signs of damage include scratches, cracks, and chips.

- Trained dealer technicians can inspect the windshield and recommend proper replacement if needed.

Wiper Blades

Wiper blades need to be cleaned and kept in good condition to provide a clear view.

- Signs of wear include streaking, skipping across the windshield, and worn or split rubber.
- Trained dealer technicians can check the wiper blades and replace them when needed.

Recommended Fluids, Lubricants, and Parts

Recommended Fluids and Lubricants

This maintenance section applies to vehicles with a gasoline engine. If the vehicle has a diesel engine, see “Recommended Fluids and Lubricants” in the Duramax diesel supplement.

Fluids and lubricants identified below by name, part number, or specification can be obtained from your dealer.

Usage	Fluid/Lubricant
Automatic Transmission (6-Speed Transmission)	DEXRON-VI Automatic Transmission Fluid.
Automatic Transmission (8-Speed Transmission)	DEXRON-HP Automatic Transmission Fluid.
Automatic Transmission (10-Speed Transmission)	DEXRON ULV Automatic Transmission Fluid (GM Part No. 19352619, in Canada 19352620).
Chassis Lubrication	Chassis Lubricant (GM Part No. 12377985, in Canada 88901242) or lubricant meeting requirements of NLGI #2, Category LB or GC-LB.
Engine Coolant	50/50 mixture of clean, drinkable water and use only DEX-COOL coolant. See *Cooling System* ⇨ *331*.
Engine Oil	Engine oil meeting the dexos1 specification of the proper SAE viscosity grade. ACDelco dexos1 full synthetic is recommended. See *Engine Oil* ⇨ *325*.
Front and Rear Axle Driveshaft Splines	Spline Lubricant, Special Lubricant (GM Part No. 19257121, in Canada 19257122).

Usage	Fluid/Lubricant
Front Axle (Four-Wheel Drive) and Rear Axle	See your dealer.
Hydraulic Brake System	DOT 4 Hydraulic Brake Fluid (GM Part No. 19299570, in Canada 19299571).
Key Lock Cylinders, Hood Hinges, Body Door Hinge Pins, Tailgate Hinge and Linkage, Fuel Door Hinge, Tailgate Handle Pivot Points, Hinges, Latch Bolt, and Linkage	Multi-Purpose Lubricant, Superlube (GM Part No. 12346241, in Canada 10953474).
Transfer Case (Four-Wheel Drive)	DEXRON-VI Automatic Transmission Fluid.
Weatherstrip Conditioning	Weatherstrip Lubricant (GM Part No. 3634770, in Canada 10953518) or equivalent.
Weatherstrip Squeaks	Synthetic Grease with Teflon, Superlube (GM Part No. 12371287, in Canada 10953437).
Windshield Washer	Automotive windshield washer fluid that meets regional freeze protection requirements.

Maintenance Replacement Parts

Replacement parts identified below by name, part number, or specification can be obtained from your dealer.

If the vehicle has a diesel engine, see the Duramax diesel supplement.

Part	GM Part Number	ACDelco Part Number
Engine Air Cleaner/Filter		
With high capacity air cleaner	84121219	A3244C
Without high capacity air cleaner	84121217	A3246C
Oil Filter		
2.7L L4	55495105	PF66
4.3L V6	19330000	PF63E
5.3L V8; 6.2L V8	19330000	PF63E
Passenger Compartment Air Filter	13508023	CF185
Spark Plugs		
2.7L L4	12688094	41-106-IP
4.3L V6	12622441	41-114
5.3L V8; 6.2L V8	12622441	41-114
Wiper Blades		
Driver Side – 55 cm (21.7 in)	23387857	—
Passenger Side – 55 cm (21.7 in)	23387857	—

Maintenance Records

After the scheduled services are performed, record the date, odometer reading, who performed the service, and the type of services performed in the boxes provided. Retain all maintenance receipts.

Date	Odometer Reading	Serviced By	Services Performed

Technical Data

Vehicle Identification
Vehicle Identification Number (VIN) 433
Service Parts Identification Label 433

Vehicle Data
Capacities and Specifications 434
Engine Drive Belt Routing 436

Vehicle Identification

Vehicle Identification Number (VIN)

This legal identifier is in the front corner of the instrument panel, on the driver side of the vehicle. It can be seen through the windshield from outside. The Vehicle Identification Number (VIN) also appears on the Vehicle Certification and Service Parts labels and certificates of title and registration.

Engine Identification

The eighth character in the VIN is the engine code. This code identifies the vehicle's engine, specifications, and replacement parts. See “Engine Specifications” under *Capacities and Specifications* ⇨ *434* for the vehicle's engine code.

Service Parts Identification Label

There may be a label on the inside of the glove box that contains the following information:

- Vehicle Identification Number (VIN)
- Model designation
- Paint information
- Production options and special equipment

If there is no label, there is a barcode on the certification label on the center (B) pillar to scan for this same information.

Vehicle Data

Capacities and Specifications

The following approximate capacities are given in metric and English conversions. See *Recommended Fluids and Lubricants* ⇨ *429*.

If the vehicle has a diesel engine, see the Duramax diesel supplement.

Application	Capacities	
	Metric	English
Air Conditioning Refrigerant	For the air conditioning system refrigerant type and charge amount, see the refrigerant label under the hood. See your dealer for more information.	
Cooling System		
2.7L L4 1500 Series	11.8 L	12.5 qt
4.3L V6 1500 Series	11.6 L	12.3 qt
5.3L V8 1500 Series (L82)	12.4 L	13.1 qt
5.3L V8 1500 Series (L84)	12.6 L	13.3 qt
6.2L V8 1500 Series	13.1 L	13.8 qt
Engine Oil with Filter		
2.7L L4 1500 Series	5.7 L	6.0 qt
4.3L V6 1500 Series	5.7 L	6.0 qt

Application	Capacities	
	Metric	English
5.3L V8; 6.2L V8 1500 Series	7.6 L	8.0 qt
Fuel Tank		
1500 Series Standard and Short Box (Gas & 4WD Diesel)	90.9 L	24.0 gal
1500 Series Standard and Short Box (2WD Diesel)	83.3 L	22.0 gal
1500 Series Long Box	106.0 L	28.0 gal
Transfer Case Fluid	1.5 L	1.6 qt
Wheel Nut Torque	190 N•m	140 lb ft
All capacities are approximate. When adding, be sure to fill to the approximate level, as recommended in this manual. Recheck fluid level after filling.		

Engine Specifications

Engine	VIN Code	Spark Plug Gap
2.7L L4 (L3B)	K	0.65–0.75 mm (0.026–0.030 in)
4.3L V6 (LV3)	H	0.95–1.10 mm (0.037–0.043 in)
5.3L V8 (L82)	F	0.95–1.10 mm (0.037–0.043 in)
5.3L V8 (L84)	D	0.95–1.10 mm (0.037–0.043 in)
6.2L V8 (L87)	L	0.95–1.10 mm (0.037–0.043 in)

Engine Drive Belt Routing

If the vehicle has a diesel engine, see the Duramax diesel supplement.

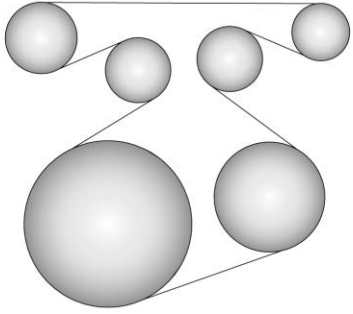

2.7L Engine

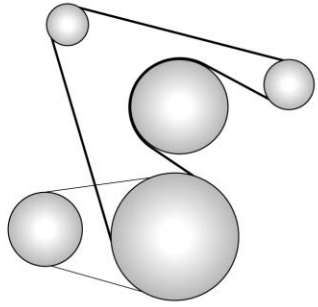

4.3L, 5.3L, and 6.2L Engines

Customer Information

Customer Information
Customer Satisfaction Procedure 437
Customer Assistance Offices 439
Customer Assistance for Text Telephone (TTY) Users 440
Online Owner Center 440
GM Mobility Reimbursement Program 441
Roadside Assistance Program 441
Scheduling Service Appointments 443
Courtesy Transportation Program 443
Collision Damage Repair 444
Publication Ordering Information 446
Radio Frequency Statement 447

Reporting Safety Defects
Reporting Safety Defects to the United States Government 447
Reporting Safety Defects to the Canadian Government 448
Reporting Safety Defects to General Motors 448

Vehicle Data Recording and Privacy
Vehicle Data Recording and Privacy 449
Event Data Recorders 449
OnStar 450
Infotainment System 450

Customer Information

Customer Satisfaction Procedure

Your satisfaction and goodwill are important to your dealer and to GMC. Normally, any concerns with the sales transaction or the operation of the vehicle will be resolved by your dealer's sales or service departments. Sometimes, however, despite the best intentions of all concerned, misunderstandings can occur. If your concern has not been resolved to your satisfaction, the following steps should be taken:

STEP ONE : Discuss your concern with a member of dealership management. Normally, concerns can be quickly resolved at that level. If the matter has already been reviewed with the sales, service, or parts manager, contact the owner of your dealership or the general manager.

STEP TWO : If after contacting a member of dealership management, it appears your concern cannot be

resolved by your dealership without further help, in the U.S., call 1-800-462-8782. In Canada, call General Motors of Canada Customer Care Centre at 1-800-263-3777 (English), or 1-800-263-7854 (French).

We encourage you to call the toll-free number in order to give your inquiry prompt attention. Have the following information available to give the Customer Assistance representative:

- Vehicle Identification Number (VIN). This is available from the vehicle registration or title, or the plate at the top left of the instrument panel and visible through the windshield.
- Dealership name and location.
- Vehicle delivery date and present mileage.

When contacting GMC, remember that your concern will likely be resolved at a dealer's facility. That is why we suggest following Step One first.

STEP THREE — U.S. Owners : Both General Motors and your dealer are committed to making sure you are completely satisfied with your new vehicle. However, if you continue to remain unsatisfied after following the procedure outlined in Steps One and Two, you can file with the Better Business Bureau (BBB) Auto Line Program to enforce your rights.

The BBB Auto Line Program is an out-of-court program administered by the Council of Better Business Bureaus to settle automotive disputes regarding vehicle repairs or the interpretation of the New Vehicle Limited Warranty. Although you may be required to resort to this informal dispute resolution program prior to filing a court action, use of the program is free of charge and your case will generally be heard within 40 days. If you do not agree with the decision given in your case, you may reject it and proceed with any other venue for relief available to you.

You may contact the BBB Auto Line Program using the toll-free telephone number or write them at the following address:

BBB Auto Line Program
Council of Better Business Bureaus, Inc.
3033 Wilson Blvd.
Suite 600
Arlington, VA 22201

Telephone: 1-800-955-5100
http://www.bbb.org/council/programs-services/dispute-handling-and-resolution/bbb-auto-line

This program is available in all 50 states and the District of Columbia. Eligibility is limited by vehicle age, mileage, and other factors. General Motors reserves the right to change eligibility limitations and/or discontinue its participation in this program.

STEP THREE — Canadian Owners : In the event that you do not feel your concerns have been addressed after following the procedure outlined in Steps One

and Two, General Motors of Canada Company wants you to be aware of its participation in a no-charge Mediation/Arbitration Program. General Motors of Canada Company has committed to binding arbitration of owner disputes involving factory-related vehicle service claims. The program provides for the review of the facts involved by an impartial third party arbiter, and may include an informal hearing before the arbiter. The program is designed so that the entire dispute settlement process, from the time you file your complaint to the final decision, should be completed in about 70 days. We believe our impartial program offers advantages over courts in most jurisdictions because it is informal, quick, and free of charge.

For further information concerning eligibility in the Canadian Motor Vehicle Arbitration Plan (CAMVAP), call toll-free 1-800-207-0685, or call the General Motors Customer Care Centre, 1-800-263-3777 (English), 1-800-263-7854 (French), or write to:

Mediation/Arbitration Program
c/o Customer Care Centre
General Motors of Canada Company
Mail Code: CA1-163-005
1908 Colonel Sam Drive
Oshawa, Ontario L1H 8P7

Your inquiry should be accompanied by the Vehicle Identification Number (VIN).

Customer Assistance Offices

GMC encourages customers to call the toll-free number for assistance. However, if a customer wishes to write or e-mail GMC, the letter should be addressed to:

United States and Puerto Rico

GMC Customer Assistance Center
P.O. Box 33172
Detroit, MI 48232-5172

www.gmc.com

1-800-GMC-8782 (1-800-462-8782)
1-888-889-2438 (For Text Telephone devices (TTYs))
Roadside Assistance:
1-888-881-3302

From U.S. Virgin Islands:

1-800-496-9994

Canada

General Motors of Canada Company
Customer Care Centre, Mail Code: CA1-163-005
1908 Colonel Sam Drive
Oshawa, Ontario L1H 8P7
www.gmc.ca

1-800-263-3777 (English)
1-800-263-7854 (French)
1-800-263-3830 (For Text Telephone Devices (TTYs))
Roadside Assistance:
1-800-268-6800

Overseas

Please contact the local General Motors Business Unit.

Customer Assistance for Text Telephone (TTY) Users

To assist customers who are deaf, hard of hearing, or speech-impaired and who use Text Telephones (TTYs), GMC has TTY equipment available at its Customer Assistance Center. Any TTY user in the U.S. can communicate with GMC by dialing: 1-888-889-2438. TTY users in Canada can dial 1-800-263-3830.

Online Owner Center

Online Owner Experience (U.S.) my.gmc.com

The GMC online owner experience is a one-stop resource that allows interaction with GMC and keeps important vehicle-specific information in one place.

Membership Benefits

: Download owner's manuals and view vehicle-specific how-to videos.

: View maintenance schedules, alerts, and Vehicle Diagnostic Information. Schedule service appointments.

: View and print dealer-recorded service records and self-recorded service records.

: Select a dealer and view locations, maps, phone numbers, and hours.

: Track your vehicle's warranty information.

: View active recalls by Vehicle Identification Number (VIN). See *Vehicle Identification Number (VIN)* ⇨ *433*.

: View GM Card, SiriusXM Satellite radio (if equipped), and OnStar account information (if equipped).

: Chat live with online help representatives.

See my.gmc.com to register your vehicle.

GMC Centre (Canada) www.gmcowner.ca

Take a trip to the GMC Centre:

- Chat live with online help representatives.
- Use the Vehicle Tools section.
- Access third party enthusiast sites and social media networks.
- Locate resources such as lease-end, financing, and warranty information.
- Retrieve your favorite articles, quizzes, tips, and multimedia galleries organized into the Features and Auto Care Sections.
- Download the owner's manual for your vehicle, quickly and easily.
- Find the GMC-recommended maintenance services for your vehicle.

GM Mobility Reimbursement Program

GENERAL MOTORS MOBILITY

This program is available to qualified applicants for cost reimbursement, up to certain limits, of eligible aftermarket adaptive equipment required for the vehicle, such as hand controls or a wheelchair/scooter lift for the vehicle.

To learn about the GM Mobility program, see www.gmmobility.com or call the GM Mobility Assistance Center at 1-800-323-9935. Text Telephone (TTY) users, call 1-800-833-9935.

General Motors of Canada also has a Mobility program. See www.gm.ca or call 1-800-GM-DRIVE (800-463-7483) for details. TTY users call 1-800-263-3830.

Roadside Assistance Program

For U.S.-purchased vehicles, call 1-888-881-3302; (Text Telephone (TTY): 1-888-889-2438).

For Canadian-purchased vehicles, call 1-800-268-6800.

Service is available 24 hours a day, 365 days a year.

Calling for Assistance

When calling Roadside Assistance, have the following information ready:

- Your name, home address, and home telephone number
- Telephone number of your location
- Location of the vehicle
- Model, year, color, and license plate number of the vehicle
- Odometer reading, Vehicle Identification Number (VIN), and delivery date of the vehicle
- Description of the problem

Coverage

Services are provided for the duration of the vehicle's powertrain warranty.

In the U.S., anyone driving the vehicle is covered. In Canada, a person driving the vehicle without permission from the owner is not covered.

Roadside Assistance is not a part of the New Vehicle Limited Warranty. General Motors North America and GMC reserve the right to make any changes or discontinue the Roadside Assistance program at any time without notification.

General Motors North America and GMC reserve the right to limit services or payment to an owner or driver if they decide the claims are made too often, or the same type of claim is made many times.

Services Provided

- **Emergency Fuel Delivery:** Delivery of enough fuel for the vehicle to get to the nearest service station.

- **Lock-Out Service:** Service to unlock the vehicle if you are locked out. A remote unlock may be available if you have OnStar. For security reasons, the driver must present identification before this service is given.
- **Emergency Tow from a Public Road or Highway:** Tow to the nearest GMC dealer for warranty service, or if the vehicle was in a crash and cannot be driven. Assistance is not given when the vehicle is stuck in the sand, mud, or snow.
- **Flat Tire Change:** Service to change a flat tire with the spare tire. The spare tire, if equipped, must be in good condition and properly inflated. It is the owner's responsibility for the repair or replacement of the tire if it is not covered by the warranty.
- **Battery Jump Start:** Service to jump start a dead battery.
- **Trip Interruption Benefits and Assistance:** If your trip is interrupted due to a warranty event, incidental expenses may be reimbursed within the Powertrain warranty period. Items considered are reasonable and customary hotel, meals, rental car, or a vehicle being delivered back to the customer, up to 500 miles.

Services Not Included in Roadside Assistance

- Impound towing caused by violation of any laws
- Legal fines
- Mounting, dismounting, or changing of snow tires, chains, or other traction devices

Service is not provided if a vehicle is in an area that is not accessible to the service vehicle or is not a regularly traveled or maintained public road, which includes ice and winter roads. Off-road use is not covered.

Services Specific to Canadian-Purchased Vehicles

- **Fuel Delivery:** Reimbursement is up to 7 L. Diesel fuel delivery may be restricted. Propane and other fuels are not provided through this service.
- **Lock-Out Service:** Vehicle registration is required.
- **Trip Interruption Benefits and Assistance:** Must be over 150 km from where your trip was started to qualify. Pre-authorization, original detailed receipts, and a copy of the repair orders are required. Once authorization has been received, the Roadside Assistance advisor will help to make arrangements and explain how to receive payment.
- **Alternative Service:** If assistance cannot be provided right away, the Roadside Assistance advisor may give permission to get local emergency road service. You will receive payment, up to $100,

after sending the original receipt to Roadside Assistance. Mechanical failures may be covered, however any cost for parts and labor for repairs not covered by the warranty are the owner responsibility.

Scheduling Service Appointments

When the vehicle requires warranty service, contact your dealer and request an appointment. By scheduling a service appointment and advising the service consultant of your transportation needs, your dealer can help minimize your inconvenience.

If the vehicle cannot be scheduled into the service department immediately, keep driving it until it can be scheduled for service, unless, of course, the problem is safety related. If it is, please call your dealership, let them know this, and ask for instructions.

If your dealer requests you to bring the vehicle for service, you are urged to do so as early in the work day as possible to allow for same-day repair.

Courtesy Transportation Program

To enhance your ownership experience, we and our participating dealers are proud to offer Courtesy Transportation, a customer support program for vehicles with the Bumper-to-Bumper (Base Warranty Coverage period in Canada), extended powertrain, and/or hybrid-specific warranties in both the U.S. and Canada.

Several Courtesy Transportation options are available to assist in reducing inconvenience when warranty repairs are required.

Courtesy Transportation is not a part of the New Vehicle Limited Warranty. A separate booklet entitled “Limited Warranty and Owner Assistance Information” furnished with each new vehicle provides detailed warranty coverage information.

Transportation Options

Warranty service can generally be completed while you wait. However, if you are unable to do so, your dealer may offer the following transportation options:

Shuttle Service

This includes one-way or round-trip shuttle service within reasonable time and distance parameters of your dealer's area.

Public Transportation or Fuel Reimbursement

If overnight warranty repairs are needed, and public transportation is used, the expense must be supported by original receipts and within the maximum amount allowed by GM for shuttle service. If U.S. customers arrange their own transportation, limited reimbursement for reasonable fuel expenses may be available. Claim amounts should reflect actual costs

and be supported by original receipts. See your dealer for information.

Courtesy Rental Vehicle

For an overnight warranty repair, the dealer may provide an available courtesy rental vehicle or provide for reimbursement of a rental vehicle. Reimbursement is limited and must be supported by original receipts as well as a signed and completed rental agreement and meet state/provincial, local, and rental vehicle provider requirements. Requirements vary and may include minimum age requirements, insurance coverage, credit card, etc. Additional fees such as fuel usage charges, taxes, levies, usage fees, excessive mileage, or rental usage beyond the completion of the repair are also your responsibility.

It may not be possible to provide a like vehicle as a courtesy rental.

Additional Program Information

All program options, such as shuttle service, may not be available at every dealer. Contact your dealer for specific availability.

General Motors reserves the right to unilaterally modify, change, or discontinue Courtesy Transportation at any time and to resolve all questions of claim eligibility pursuant to the terms and conditions described herein at its sole discretion.

Collision Damage Repair

If the vehicle is involved in a collision and it is damaged, have the damage repaired by a qualified technician using the proper equipment and quality replacement parts. Poorly performed collision repairs diminish the vehicle resale value, and safety performance can be compromised in subsequent collisions.

Collision Parts

Genuine GM Collision parts are new parts made with the same materials and construction methods as the parts with which the vehicle was originally built. Genuine GM Collision parts are the best choice to ensure that the vehicle's designed appearance, durability, and safety are preserved. The use of Genuine GM parts can help maintain the GM New Vehicle Limited Warranty.

Recycled original equipment parts may also be used for repair. These parts are typically removed from vehicles that were total losses in prior crashes. In most cases, the parts being recycled are from undamaged sections of the vehicle. A recycled original equipment GM part may be an acceptable choice to maintain the vehicle's originally designed appearance and safety performance; however, the history of these parts is not known. Such parts are not covered by the GM New Vehicle Limited Warranty, and any related failures are not covered by that warranty.

Aftermarket collision parts are also available. These are made by companies other than GM and may not have been tested for the vehicle. As a result, these parts may fit poorly, exhibit premature durability/corrosion problems, and may not perform properly in subsequent collisions. Aftermarket parts are not covered by the GM New Vehicle Limited Warranty, and any vehicle failure related to such parts is not covered by that warranty.

Repair Facility

GM also recommends that you choose a collision repair facility that meets your needs before you ever need collision repairs. Your dealer may have a collision repair center with GM-trained technicians and state-of-the-art equipment, or be able to recommend a collision repair center that has GM-trained technicians and comparable equipment.

Insuring the Vehicle

Protect your investment in the GM vehicle with comprehensive and collision insurance coverage. There are significant differences in the quality of coverage afforded by various insurance policy terms. Many insurance policies provide reduced protection to the GM vehicle by limiting compensation for damage repairs through the use of aftermarket collision parts. Some insurance companies will not specify aftermarket collision parts. When purchasing insurance, we recommend that you ensure that the vehicle will be repaired with GM original equipment collision parts. If such insurance coverage is not available from your current insurance carrier, consider switching to another insurance carrier.

If the vehicle is leased, the leasing company may require you to have insurance that ensures repairs with Genuine GM Original Equipment Manufacturer (OEM) parts or Genuine Manufacturer replacement parts. Read the lease carefully, as you may be charged at the end of the lease for poor quality repairs.

If a Crash Occurs

If there has been an injury, call emergency services for help. Do not leave the scene of a crash until all matters have been taken care of. Move the vehicle only if its position puts you in danger, or you are instructed to move it by a police officer.

Give only the necessary information to police and other parties involved in the crash.

For emergency towing see *Roadside Assistance Program* ⇨ *441*.

Gather the following information:

- Driver name, address, and telephone number
- Driver license number
- Owner name, address, and telephone number
- Vehicle license plate number

- Vehicle make, model, and model year
- Vehicle Identification Number (VIN)
- Insurance company and policy number
- General description of the damage to the other vehicle

Choose a reputable repair facility that uses quality replacement parts. See “Collision Parts” earlier in this section.

If the airbag has inflated, see *What Will You See after an Airbag Inflates?* ⇨ *92*.

Managing the Vehicle Damage Repair Process

In the event that the vehicle requires damage repairs, GM recommends that you take an active role in its repair. If you have a pre-determined repair facility of choice, take the vehicle there, or have it towed there. Specify to the facility that any required replacement collision parts be original equipment parts, either new Genuine GM parts or recycled original GM parts. Remember, recycled parts will not be covered by the GM vehicle warranty.

Insurance pays the bill for the repair, but you must live with the repair. Depending on your policy limits, your insurance company may initially value the repair using aftermarket parts. Discuss this with the repair professional, and insist on Genuine GM parts. Remember, if the vehicle is leased, you may be obligated to have the vehicle repaired with Genuine GM parts, even if your insurance coverage does not pay the full cost.

If another party's insurance company is paying for the repairs, you are not obligated to accept a repair valuation based on that insurance company's collision policy repair limits, as you have no contractual limits with that company. In such cases, you can have control of the repair and parts choices as long as the cost stays within reasonable limits.

Publication Ordering Information

Service Manuals

Service manuals have the diagnosis and repair information on the engine, transmission, axle, suspension, brakes, electrical system, steering system, body, etc.

Customer Literature

Owner’s manuals are written specifically for owners and are intended to provide basic operational information about the vehicle. The owner’s manual includes the Maintenance Schedule for all models.

Customer literature publications available for purchase include owner’s manuals, warranty manuals, infotainment manuals, and portfolios. Portfolios include an owner’s manual, warranty manual, infotainment manual, if applicable, and zip lock bag or pouch.

Current and Past Models

Service manuals and customer literature are available for many current and past model year GM vehicles.

To order, call 1-800-551-4123 Monday–Friday, 8:00 a.m.–6:00 p.m. eastern time

For credit card orders only (VISA, MasterCard, or Discover), see Helm, Inc. at: www.helminc.com.

To order by mail, write to:

Helm, Incorporated
Attention: Customer Service
47911 Halyard Drive
Plymouth, MI 48170

Make checks payable in U.S. funds.

Radio Frequency Statement

This vehicle has systems that operate on a radio frequency that complies with Part 15/Part 18 of the Federal Communications Commission (FCC) rules and with Innovation, Science and Economic Development (ISED) Canada's RSP-100 / license-exempt RSS's / ICES-001.

Operation is subject to the following two conditions:

1. The device may not cause harmful interference.
2. The device must accept any interference received, including interference that may cause undesired operation of the device.

Changes or modifications to any of these systems by other than an authorized service facility could void authorization to use this equipment.

Reporting Safety Defects

Reporting Safety Defects to the United States Government

If you believe that your vehicle has a defect which could cause a crash or could cause injury or death, you should immediately inform the National Highway Traffic Safety Administration (NHTSA) in addition to notifying General Motors.

If NHTSA receives similar complaints, it may open an investigation, and if it finds that a safety defect exists in a group of vehicles, it may order a recall and remedy campaign. However, NHTSA cannot become involved in individual problems between you, your dealer, or General Motors.

To contact NHTSA, you may call the Vehicle Safety Hotline toll-free at 1-888-327-4236 (TTY: 1-800-424-9153); go to *http://www.safercar.gov;* or write to:

Administrator, NHTSA
1200 New Jersey Avenue, S.E.
Washington, D.C. 20590

You can also obtain other information about motor vehicle safety from *http://www.safercar.gov*.

Reporting Safety Defects to the Canadian Government

If you live in Canada, and you believe that the vehicle has a safety defect, notify Transport Canada immediately, and notify General Motors of Canada Company. Call Transport Canada at 1-800-333-0510; go to:

www.tc.gc.ca/recalls (English)

www.tc.gc.ca/rappels (French)

or write to:

Transport Canada
Motor Vehicle Safety Directorate
Defect Investigations and Recalls Division
80 Noel Street
Gatineau, QC J8Z 0A1

Reporting Safety Defects to General Motors

In addition to notifying NHTSA (or Transport Canada) in a situation like this, notify General Motors.

In the U.S., call 1-800-GMC-8782 (1-800-462-8782), or write:

GMC Customer Assistance Center
P.O. Box 33172
Detroit, MI 48232-5172

In Canada, call 1-800-263-3777 (English) or 1-800-263-7854 (French), or write:

General Motors of Canada Company
Customer Care Centre, Mail Code: CA1-163-005
1908 Colonel Sam Drive
Oshawa, Ontario L1H 8P7

In Mexico, call 01-800-466-0812 or 01-800-466-0801.

In other Central America and Caribbean Countries, call 52-722-236-0680.

Vehicle Data Recording and Privacy

The vehicle has a number of computers that record information about the vehicle's performance and how it is driven. For example, the vehicle uses computer modules to monitor and control engine and transmission performance, to monitor the conditions for airbag deployment and deploy them in a crash, and, if equipped, to provide antilock braking to help the driver control the vehicle. These modules may store data to help the dealer technician service the vehicle. Some modules may also store data about how the vehicle is operated, such as rate of fuel consumption or average speed. These modules may retain personal preferences, such as radio presets, seat positions, and temperature settings.

Event Data Recorders

This vehicle is equipped with an event data recorder (EDR). The main purpose of an EDR is to record, in certain crash or near crash-like situations, such as an air bag deployment or hitting a road obstacle, data that will assist in understanding how a vehicle's systems performed. The EDR is designed to record data related to vehicle dynamics and safety systems for a short period of time, typically 30 seconds or less. The EDR in this vehicle is designed to record such data as:

- How various systems in your vehicle were operating;
- Whether or not the driver and passenger safety belts were buckled/fastened;
- How far (if at all) the driver was depressing the accelerator and/or brake pedal; and,
- How fast the vehicle was traveling.

These data can help provide a better understanding of the circumstances in which crashes and injuries occur.

Note

EDR data are recorded by your vehicle only if a non-trivial crash situation occurs; no data are recorded by the EDR under normal driving conditions and no personal data (e.g., name, gender, age, and crash location) are recorded. However, other parties, such as law enforcement, could combine the EDR data with the type of personally identifying data routinely acquired during a crash investigation.

To read data recorded by an EDR, special equipment is required, and access to the vehicle or the EDR is needed. In addition to the vehicle manufacturer, other parties, such as law enforcement, that have the special equipment, can read the information if they have access to the vehicle or the EDR.

GM will not access these data or share it with others except: with the consent of the vehicle owner or, if the vehicle is leased, with the consent of the lessee; in response to an official request by police or similar government office; as part of GM's defense of litigation through the discovery process; or, as required by law. Data that GM collects or receives may also be used for GM research needs or may be made available to others for research purposes, where a need is shown and the data is not tied to a specific vehicle or vehicle owner.

OnStar

If the vehicle is equipped with OnStar and has an active service plan, additional data may be collected through the OnStar system. This includes information about the vehicle's operation; collisions involving the vehicle; the use of the vehicle and its features; and, in certain situations, the location and approximate GPS speed of the vehicle. Refer to the OnStar Terms and Conditions and Privacy Statement on the OnStar website.

See *OnStar Additional Information* ⇨ *453*.

Infotainment System

If the vehicle is equipped with a navigation system as part of the infotainment system, use of the system may result in the storage of destinations, addresses, telephone numbers, and other trip information. See the infotainment manual for information on stored data and for deletion instructions.

OnStar

OnStar Overview
OnStar Overview 451

OnStar Services
Emergency 452
Security 453

OnStar Additional Information
OnStar Additional Information 453

OnStar Overview

Voice Command Button

Blue OnStar Button

Red Emergency Button

This vehicle may be equipped with a comprehensive, in-vehicle system that can connect to an OnStar Advisor for Emergency, Security, Navigation, Connections, and Diagnostics Services. OnStar services may require a paid service plan and data plan. OnStar requires the vehicle battery and electrical system, cellular service, and GPS satellite signals to be available and operating. OnStar acts as a link to existing emergency service providers. OnStar may collect information about you and your vehicle, including location information. See OnStar User Terms, Privacy Statement, and Software Terms for more details including system limitations at www.onstar.com (U.S.) or www.onstar.ca (Canada).

The OnStar system status light is next to the OnStar buttons. If the status light is:

- Solid Green: System is ready.
- Flashing Green: On a call.
- Red: Indicates a problem.
- Off: System is off. Press On twice to speak with an OnStar Advisor.

Press On or call 1-888-4ONSTAR (1-888-466-7827) to speak to an Advisor.

Functionality of the Voice Command button may vary by vehicle and region.

Press to:

- Open the OnStar app on the infotainment display. See the infotainment manual for information on how to use the OnStar app.

Or

- Make a call, end a call, or answer an incoming call.
- Give OnStar Hands-Free Calling voice commands.
- Give OnStar Turn-by-Turn Navigation voice commands.
- Obtain and customize the Wi-Fi hotspot name or SSID and password, if equipped.

Press to connect to an Advisor to:

- Verify account information or update contact information.
- Get driving directions.
- Receive a Diagnostic check of the vehicle's key operating systems.
- Receive Roadside Assistance.
- Manage Wi-Fi Settings, if equipped.

Press SOS to get a priority connection to an OnStar Advisor available 24/7 to:

- Get help for an emergency.
- Be a Good Samaritan or respond to an AMBER Alert.
- Get assistance in severe weather or other crisis situations and find evacuation routes.

OnStar Services

Emergency

Emergency Services require an active safety and security plan. With Automatic Crash Response, built-in sensors can automatically alert a specially trained OnStar Advisor who is immediately connected in to the vehicle to help.

Press SOS for a priority connection to an OnStar Advisor who can contact emergency service providers, direct them to your exact location, and relay important information.

With OnStar Crisis Assist, specially trained Advisors are available 24 hours a day, 7 days a week, to provide a central point of contact, assistance, and information during a crisis.

With Roadside Assistance, Advisors can locate a nearby service provider to help with a flat tire, a battery jump, or an empty gas tank.

Security

If equipped, OnStar provides these services:

- With Stolen Vehicle Assistance, OnStar Advisors can use GPS to pinpoint the vehicle and help authorities quickly recover it.
- With Remote Ignition Block, if equipped, OnStar can block the engine from being restarted.
- With Stolen Vehicle Slowdown, if equipped, OnStar can work with law enforcement to gradually slow the vehicle down.

Theft Alarm Notification

If equipped, if the doors are locked and the vehicle alarm sounds, a notification by text, e-mail, or phone call will be sent. If the vehicle is stolen, an OnStar Advisor can work with authorities to recover the vehicle.

OnStar Additional Information

In-Vehicle Audio Messages

Audio messages may play important information at the following times:

- Prior to vehicle purchase.
  Press to set up an account.
- After change in ownership and at 90 days.

Transferring Service

Press to request account transfer eligibility information. The Advisor can cancel or change account information.

Selling/Transferring the Vehicle

Call 1-888-4ONSTAR (1-888-466-7827) immediately to terminate your OnStar or connected services if the vehicle is disposed of, sold, transferred, or if the lease ends.

Reactivation for Subsequent Owners

Press and follow the prompts to speak to an Advisor as soon as possible. The Advisor will update vehicle records and explain OnStar or connected service options.

How OnStar Service Works

Automatic Crash Response, Emergency Services, Crisis Assist, Stolen Vehicle Assistance, Remote Services, Roadside Assistance, and Hands-Free Calling are available on most vehicles. Not all OnStar services are available everywhere or on all vehicles. For more information, a full description of OnStar services, system limitations, and OnStar User Terms, Privacy Statement, and Software Terms:

- Call 1-888-4ONSTAR (1-888-466-7827).
- See www.onstar.com (U.S.).
- See www.onstar.ca (Canada).
- Call TTY 1-877-248-2080.

- Press OnStar to speak with an Advisor.

OnStar or connected services cannot work unless the vehicle is in a place where OnStar has an agreement with a wireless service provider for service in that area. The wireless service provider must also have coverage, network capacity, reception, and technology compatible with OnStar or connected services. Service involving location information about the vehicle cannot work unless GPS signals are available, unobstructed, and compatible with the OnStar hardware. OnStar or connected services may not work if the OnStar equipment is not properly installed or it has not been properly maintained. If equipment or software is added, connected, or modified, OnStar or connected services may not work. Other problems beyond the control of OnStar — such as hills, tall buildings, tunnels, weather, electrical system design and architecture of the vehicle, damage to the vehicle in a crash, or wireless phone network congestion or jamming — may prevent service.

See *Radio Frequency Statement* ⇨ *447*.

Services for People with Disabilities

Advisors provide services to help with physical disabilities and medical conditions.

Press OnStar to help:

- Locate a gas station with an attendant to pump gas.
- Find a hotel, restaurant, etc., that meets accessibility needs.
- Provide directions to the closest hospital or pharmacy in urgent situations.

TTY Users

OnStar has the ability to communicate to deaf, hard-of-hearing, or speech-impaired customers while in the vehicle. The available dealer-installed TTY system can provide in-vehicle access to all OnStar services, except Virtual Advisor and OnStar Turn-by-Turn Navigation.

If equipped, TTY mode can be turned on or off by touching Settings, then Apps, and then Phone. When TTY mode is on, phone calls can be made or received with OnStar using the infotainment display.

OnStar Personal Identification Number (PIN)

A PIN is needed to access some OnStar services. The PIN will need to be changed the first time when speaking with an Advisor. To change the OnStar PIN, contact an OnStar Advisor by pressing OnStar or calling 1-888-4ONSTAR.

Warranty

OnStar equipment may be warranted as part of the vehicle warranty.

Languages

The vehicle can be programmed to respond in multiple languages.

Press On and ask for an Advisor. Advisors are available in English, Spanish, and French. Available languages may vary by country.

Potential Issues

OnStar cannot perform Remote Door Unlock or Stolen Vehicle Assistance after the vehicle has been off continuously for 10 days without an ignition cycle. If the vehicle has not been started for 10 days, OnStar can contact Roadside Assistance or a locksmith to help gain access to the vehicle.

Global Positioning System (GPS)

- Obstruction of the GPS can occur in a large city with tall buildings; in parking garages; around airports; in tunnels and underpasses; or in an area with very dense trees. If GPS signals are not available, the OnStar system should still operate to call OnStar. However, OnStar could have difficulty identifying the exact location.
- In emergency situations, OnStar can use the last stored GPS location to send to emergency responders.

A temporary loss of GPS can cause loss of the ability to send a Turn-by-Turn Navigation route. The Advisor may give a verbal route or may ask for a call back after the vehicle is driven into an open area.

Cellular and GPS Antennas

Cellular reception is required for OnStar to send remote signals to the vehicle. Do not place items over or near the antenna to prevent blocking cellular and GPS signal reception.

Unable to Connect to OnStar Message

If there is limited cellular coverage or the cellular network has reached maximum capacity, this message may come on. Press On to try the call again or try again after driving a few miles into another cellular area.

Vehicle and Power Issues

OnStar services require a vehicle electrical system, wireless service, and GPS satellite technologies to be available and operating for features to function properly. These systems may not operate if the battery is discharged or disconnected.

Add-on Electrical Equipment

The OnStar system is integrated into the electrical architecture of the vehicle. Do not add any electrical equipment. See *Add-On Electrical Equipment* ⇨ *310*. Added electrical equipment may interfere with the operation of the OnStar system and cause it to not operate.

Vehicle Software Updates

OnStar or GM may remotely deliver software updates or changes to the vehicle without further notice or consent. These updates or changes may enhance or maintain safety,

security, or the operation of the vehicle or the vehicle systems. Software updates or changes may affect or erase data or settings that are stored in the vehicle, such as OnStar Hands-Free Calling name tags, saved navigation destinations, or pre-set radio stations. Neither OnStar nor GM is responsible for any affected or erased data or settings. These updates or changes may also collect personal information. Such collection is described in the OnStar privacy statement or separately disclosed at the time of installation. These updates or changes may also cause a system to automatically communicate with GM servers to collect information about vehicle system status, identify whether updates or changes are available, or deliver updates or changes. An active OnStar agreement constitutes consent to these software updates or changes and agreement that either OnStar or GM may remotely deliver them to the vehicle.

Privacy

The complete OnStar Privacy Statement may be found at www.onstar.com (U.S.), or www.onstar.ca (Canada). We recommend that you review it. If you have any questions, call 1-888-4ONSTAR (1-888-466-7827) or press On to speak with an Advisor. Users of wireless communications are cautioned that the privacy of any information sent via wireless cellular communications cannot be assured. Third parties may unlawfully intercept or access transmissions and private communications without consent.

OnStar - Software Acknowledgements

Certain OnStar components include libcurl and unzip software and other third party software. Below are the notices and licenses associated with libcurl and unzip and for other third party software please see http://opensource.lge.com/index

www.onstar.com/us/en/

libcurl:

COPYRIGHT AND PERMISSION NOTICE

Copyright (c) 1996 - 2010, Daniel Stenberg, <daniel@haxx.se>.

All rights reserved.

Permission to use, copy, modify, and distribute this software for any purpose with or without fee is hereby granted, provided that the above copyright notice and this permission notice appear in all copies.

THE SOFTWARE IS PROVIDED “AS IS,” WITHOUT WARRANTY OF ANY KIND, EXPRESS OR IMPLIED, INCLUDING BUT NOT LIMITED TO THE WARRANTIES OF MERCHANTABILITY, FITNESS FOR A PARTICULAR PURPOSE AND NONINFRINGEMENT OF THIRD PARTY RIGHTS. IN NO EVENT SHALL THE AUTHORS OR COPYRIGHT HOLDERS BE LIABLE FOR ANY CLAIM, DAMAGES OR OTHER LIABILITY, WHETHER IN AN ACTION OF CONTRACT, TORT OR

OTHERWISE, ARISING FROM, OUT OF OR IN CONNECTION WITH THE SOFTWARE OR THE USE OR OTHER DEALINGS IN THE SOFTWARE.

Except as contained in this notice, the name of a copyright holder shall not be used in advertising or otherwise to promote the sale, use or other dealings in this Software without prior written authorization of the copyright holder.

unzip:

This is version 2005-Feb-10 of the Info-ZIP copyright and license. The definitive version of this document should be available at ftp://ftp.info-zip.org/pub/infozip/license.html indefinitely.

Copyright (c) 1990-2005 Info-ZIP. All rights reserved.

For the purposes of this copyright and license, “Info-ZIP” is defined as the following set of individuals:

Mark Adler, John Bush, Karl Davis, Harald Denker, Jean-Michel Dubois, Jean-loup Gailly, Hunter Goatley, Ed Gordon, Ian Gorman, Chris Herborth, Dirk Haase, Greg Hartwig, Robert Heath, Jonathan Hudson, Paul Kienitz, David Kirschbaum, Johnny Lee, Onno van der Linden, Igor Mandrichenko, Steve P. Miller, Sergio Monesi, Keith Owens, George Petrov, Greg Roelofs, Kai Uwe Rommel, Steve Salisbury, Dave Smith, Steven M. Schweda, Christian Spieler, Cosmin Truta, Antoine Verheijen, Paul von Behren, Rich Wales, Mike White.

This software is provided “as is,” without warranty of any kind, express or implied. In no event shall Info-ZIP or its contributors be held liable for any direct, indirect, incidental, special or consequential damages arising out of the use of or inability to use this software.

Permission is granted to anyone to use this software for any purpose, including commercial applications, and to alter it and redistribute it freely, subject to the following restrictions:

1. Redistributions of source code must retain the above copyright notice, definition, disclaimer, and this list of conditions.
2. Redistributions in binary form (compiled executables) must reproduce the above copyright notice, definition, disclaimer, and this list of conditions in documentation and/or other materials provided with the distribution. The sole exception to this condition is redistribution of a standard UnZipSFX binary (including SFXWiz) as part of a self-extracting archive; that is permitted without inclusion of this license, as long as the normal SFX banner has not been removed from the binary or disabled.
3. Altered versions–including, but not limited to, ports to new operating systems, existing ports with new graphical interfaces, and dynamic, shared, or static library versions–must be plainly marked as such and must not

be misrepresented as being the original source. Such altered versions also must not be misrepresented as being Info-ZIP releases–including, but not limited to, labeling of the altered versions with the names “Info-ZIP” (or any variation thereof, including, but not limited to, different capitalizations), “Pocket UnZip,” “WiZ” or “MacZip” without the explicit permission of Info-ZIP. Such altered versions are further prohibited from misrepresentative use of the Zip-Bugs or Info-ZIP e-mail addresses or of the Info-ZIP URL(s).

4. Info-ZIP retains the right to use the names “Info-ZIP,” “Zip,” “UnZip,” “UnZipSFX,” “WiZ,” “Pocket UnZip,” “Pocket Zip,” and “MacZip” for its own source and binary releases.

Connected Services

Connected Services

Navigation 459
Connections 460
Diagnostics 462

Connected Services

Navigation

Navigation requires a specific OnStar or connected service plan.

Press to receive Turn-by-Turn directions or have them sent to the vehicle's navigation screen, if equipped.

Turn-by-Turn Navigation

1. Press to connect to an Advisor.
2. Request directions to be downloaded to the vehicle.
3. Follow the voice-guided commands.

Using Voice Commands During a Planned Route

Functionality of the Voice Command button, if equipped, may vary by vehicle and region. For some vehicles, press to open the OnStar app on the infotainment display. For other vehicles press as follows.

Cancel Route

1. Press . System responds: "OnStar ready," then a tone.
2. Say "Cancel route." System responds: "Do you want to cancel directions?"
3. Say "Yes." System responds: "OK, request completed, thank you, goodbye."

Route Preview

1. Press . System responds: "OnStar ready," then a tone.
2. Say "Route preview." System responds with the next three maneuvers.

Repeat

1. Press . System responds: "OnStar ready," then a tone.

2. Say “Repeat.” System responds with the last direction given, then responds with “OnStar ready,” then a tone.

Get My Destination

1. Press . System responds: “OnStar ready,” then a tone.
2. Say “Get my destination.” System responds with the address and distance to the destination, then responds with “OnStar ready,” then a tone.

Send Destination to Vehicle

Directions can be sent to the vehicle’s navigation screen, if equipped.

Press , then ask the Advisor to download directions to the vehicle’s navigation system, if equipped. After the call ends, the navigation screen will provide prompts to begin driving directions. Routes that are sent to the navigation screen can only be canceled through the navigation system.

See www.onstar.com (U.S.) or www.onstar.ca (Canada).

Connections

The following services help with staying connected.

For coverage maps, see www.onstar.com (U.S.) or www.onstar.ca (Canada).

Ensuring Security

- Change the default passwords for the Wi-Fi hotspot and myGMC mobile application. Make these passwords different from each other and use a combination of letters, numbers, and symbols to increase the security.
- Change the default name of the SSID (Service Set Identifier). This is your network’s name that is visible to other wireless devices. Choose a unique name and avoid family names or vehicle descriptions.

Wi-Fi Hotspot (If Equipped)

The vehicle may have a built-in Wi-Fi hotspot that provides access to the Internet and web content at 4G LTE speed. Up to seven mobile devices can be connected. A data plan is required. Use the in-vehicle controls only when it is safe to do so.

1. To retrieve Wi-Fi hotspot information, press to open the OnStar app on the infotainment display, then select Wi-Fi Hotspot. On some vehicles, touch Wi-Fi or Wi-Fi Settings on the screen.
2. The Wi-Fi settings will display the Wi-Fi hotspot name (SSID), password, and on some vehicles, the connection type (no Internet connection, 3G, 4G, 4G LTE), and signal quality (poor, good, excellent).
3. To change the SSID or password, press or call 1-888-4ONSTAR to connect with an Advisor. On some

vehicles, the SSID and password can be changed in the Wi-Fi Hotspot menu.

After initial set-up, your vehicle's Wi-Fi hotspot will connect automatically to your mobile devices. Manage data usage by turning Wi-Fi on or off on your mobile device, using the myGMC mobile app, or by contacting an OnStar Advisor. On some vehicles, Wi-Fi can also be managed from the Wi-Fi Hotspot menu.

MyGMC Mobile App (If Available)

Download the myGMC mobile app to compatible Apple and Android smartphones. GMC users can access the following services from a smartphone:

- Remotely start/stop the vehicle, if factory-equipped.
- Lock/unlock doors, if equipped with automatic locks.
- Activate the horn and lamps.
- Check the vehicle's fuel level, oil life, or tire pressure, if factory-equipped with the Tire Pressure Monitor System.
- Send destinations to the vehicle.
- Locate the vehicle on a map (U.S. market only).
- Turn the vehicle's Wi-Fi hotspot on/off, manage settings, and monitor data consumption, if equipped.
- Locate a dealer and schedule service.
- Request roadside assistance.
- Set a parking reminder with pin drop, take a photo, make a note, and set a timer.
- Connect with GMC on social media.

Features are subject to change. For myGMC mobile app information and compatibility, see my.gmc.com.

An active OnStar or connected service plan may be required. A compatible device, factory-installed remote start, and power locks are required. Data rates apply. See www.onstar.com for details and system limitations.

Remote Services

Contact an OnStar Advisor to unlock the doors or sound the horn and flash the lamps.

Marketplace

OnStar Advisors can provide offers from restaurants and retailers on your route, help locate hotels, or book a room. These services vary by market.

OnStar Hands-Free Calling

Make and receive calls with the built-in wireless calling service, which requires available minutes. Functionality of the Voice Command button may vary by vehicle and region. For some vehicles, press to open the OnStar app on the infotainment display, then select Hands-Free calling. For other vehicles press as follows.

Make a Call

1. Press . System responds: “OnStar ready.”
2. Say “Call.” System responds: “Call. Please say the name or number to call.”
3. Say the entire number without pausing, including a “1” and the area code. System responds: “OK, calling.”

Calling 911 Emergency

1. Press . System responds: “OnStar ready.”
2. Say “Call.” System responds: “Call. Please say the name or number to call.”
3. Say “911” without pausing. System responds: “911.”
4. Say “Call.” System responds: “OK, dialing 911.”

Retrieve My Number

1. Press . System responds: “OnStar ready.”
2. Say “My number.” System responds: “Your OnStar Hands-Free Calling number is,” then says the number.

End a Call

Press . System responds: “Call ended.”

Verify Minutes and Expiration

Press and say “Minutes” then “Verify” to check how many minutes remain and their expiration date.

If equipped, press and touch Account Services to view the number of remaining minutes, available Wi-Fi data, and other account information.

Diagnostics

By monitoring and reporting on the vehicle's key systems, OnStar Advanced Diagnostics, if equipped, provides a way to keep up on maintenance. Capabilities vary by model. See www.onstar.com for details and system limitations. Features are subject to change. For updates on feature capabilities, see my.gmc.com. Message and data rates may apply.

Index

A

Accessories and Modifications 317
Accessory Power 227
Active Fuel Management 229
Add-On Electrical Equipment . . . 310
Adding a Snow Plow or Similar Equipment 311
Additional Information
  OnStar 453
Additional Maintenance and Care 426
Adjustments
  Lumbar, Front Seats 72
Air Cleaner/Filter, Engine 330
Air Conditioning 190, 192
Air Filter
  Life System 329
Air Filter, Passenger Compartment 196
Air Vents 196
Airbag System
  Check 99
  How Does an Airbag Restrain? 91
  Passenger Sensing System 93
  What Makes an Airbag Inflate? 91
Airbag System (cont'd)
  What Will You See after an Airbag Inflates? 92
  When Should an Airbag Inflate? 90
  Where Are the Airbags? 89
Airbags
  Adding Equipment to the Vehicle 98
  Passenger Status Indicator . . . 150
  Readiness Light 149
  Servicing Airbag-Equipped Vehicles 97
  System Check 87
Alarm
  Vehicle Security 55
Alert
  Lane Change 271
  Side Blind Zone (SBZA) 270
All-Season Tires 363
All-Terrain Tires 364
Antilock Brake System (ABS) . . . 243
  Warning Light 155
Appearance Care
  Exterior 407
  Interior 412
Assistance Program, Roadside 441

Assistance Systems for Driving 264
Assistance Systems for Parking and Backing 258
Auto Stop
Stop/Start System 224
Automatic
Dimming Mirrors 59
Door Locks 47
Forward Braking 267
Headlamp System 181
Transmission 231
Transmission Fluid 329
Automatic Transmission
Manual Mode 234
Axle, Front 344
Axle, Rear 345

B

Battery
Exterior Lighting Battery Saver 188
Load Management 187
Power Protection 187
Battery - North America 341, 399
Blade Replacement, Wiper 348
Blind Spot Mirrors 59
Brake
Parking, Electric 244
System Warning Light 153
Brake Pad Life System 339
Brakes 339
Antilock 243
Assist 245
Fluid 340
Pad Life System 339
Braking 200
Automatic Forward 267
Braking System
Front Pedestrian (FPB) 268
Break-In, New Vehicle 218
Bulb Replacement
Center High-Mounted Stoplamp (CHMSL) and Cargo Lamp 352
Halogen Bulbs 350
Headlamp Aiming 350
Headlamps 350
Headlamps, Front Turn Signal, Sidemarker, and Parking Lamps 351
License Plate Lamps 353
Taillamps, Turn Signal, Stoplamps, and Back-up Lamps 351
Buying New Tires 382

C

Calibration 134
California
Perchlorate Materials Requirements 317
California
Proposition
65 Warning . . . . . 317, 341, 399, Back Cover
Canadian Vehicle Owners 2
Capacities and Specifications 434
Carbon Monoxide
Engine Exhaust 230
Tailgate 48
Winter Driving 208
Cargo
Tie-Downs 129
Caution, Danger, and Warning 2
Center Console Storage 127
Center High-Mounted Stoplamp (CHMSL) and Cargo Lamp 352
Center Seat 71
Chains, Tire 386

Charging
Wireless 137
Charging System Light 151
Check
Engine Light (Malfunction Indicator) 151
Ignition Transmission Lock . . . 347
Child Restraints
Infants and Young Children . . . 101
Lower Anchors and Tethers for Children 107
Older Children 100
Securing 118, 122
Systems 104
Circuit Breakers 354
Cleaning
Exterior Care 407
Interior Care 412
Climate Control Systems 190
Air Conditioning 190
Dual Automatic 192
Heating 190
Clock 134
Cluster, Instrument 140
Collision Damage Repair 444
Compartments
Storage 126
Compass 134
Connected Services
Connections 460
Diagnostics 462
Navigation 459
Connections
Connected Services 460
Control
Hill Descent 248
Traction and Electronic Stability 246
Control Light
Hill Descent 155
Control of a Vehicle 200
Convex Mirrors 57
Coolant
Engine Temperature Gauge . . 147
Engine Temperature Warning Light 158
Cooling 190, 192
Cooling System 331
Courtesy Transportation Program 443
Cruise Control 254
Light 160
Cupholders 126
Customer Assistance 440
Offices 439
Customer Assistance (cont'd)
Text Telephone (TTY) Users 440
Customer Information
Publications Ordering Information 446
Customer Satisfaction Procedure 437

D

Damage Repair, Collision 444
Danger, Warning, and Caution 2
Data Collection
Infotainment System 450
OnStar 450
Data Recorders, Event 449
Daytime Running Lamps (DRL) 181
Defensive Driving 200
Delayed Locking 46
Diagnostics
Connected Services 462
Differential, Limited-Slip 254
Distracted Driving 199
Dome Lamps 185
Door
Ajar Light 161
Delayed Locking 46

Door (cont'd)
Locks 45
Power Locks 46
Drive Belt Routing, Engine 436
Driver Assistance Systems 257
Driver Information
Center (DIC) 161, 162
Driver Mode Control 249
Driver Mode Control Light 158
Driving
Assistance Systems 264
Characteristics and
Towing Tips 280
Defensive 200
Drunk 200
For Better Fuel Economy 30
Hill and Mountain Roads 208
If the Vehicle is Stuck 210
Loss of Control 202
Off-Road 202
Off-Road Recovery 201
Vehicle Load Limits 211
Wet Roads 207
Winter 208
Dual Automatic Climate
Control System 192

E

E85 or FlexFuel 276
Electric Parking Brake 244
Electric Parking Brake Light 154
Electrical Equipment,
Add-On 310
Electrical System
Engine Compartment Fuse
Block 354
Fuses and Circuit Breakers . . . 354
Instrument Panel Fuse
Block 358, 360
Overload 353
Electronic Stability Control
(ESC) Off Light 157
Emergency
OnStar 452
Engine
Air Cleaner/Filter 330
Check Light (Malfunction
Indicator) 151
Compartment Overview 320
Coolant Temperature
Gauge 147
Coolant Temperature
Warning Light 158
Cooling System 331
Drive Belt Routing 436
Engine (cont'd)
Exhaust 230
Fan 337
Heater 225
Oil Life System 327
Oil Pressure Gauge 146
Oil Pressure Light 159
Overheated Protection
Operating Mode 337
Overheating 335
Power Messages 169
Running While Parked 231
Starting 223
Engine Air Filter Life System 329
Entry Lighting 186
Equipment, Towing 289
Event Data Recorders 449
Exit Lighting 186
Extended Parking 230
Extender, Seat Belt 85
Exterior Cargo Lamps 184
Exterior Lamp Controls 178
Exterior Lamps Off Reminder . . . 180
Exterior Lighting Battery
Saver 188

F
Fan
Engine 337
Features
Memory 13
Filter,
Engine Air Cleaner 330
Flash-to-Pass 181
Flashers, Hazard Warning 182
Flat Tire 387
Changing 389
FlexFuel
E85 276
Floor Console Storage 128
Floor Mats 415
Fluid
Automatic Transmission 329
Brakes 340
Four-Wheel Drive
Transfer Case 238
Washer 338
Fog Lamps 183
Folding Mirrors 58
Forward Automatic Braking 267
Forward Collision Alert
(FCA) System 264
Four-Wheel Drive 238, 344
Four-Wheel-Drive Light 155
Frequency Statement
Radio 447
Front Axle 344
Front Fog Lamp
Light 160
Front Pedestrian Braking
(FPB) System 268
Front Seats
Adjustment 70
Heated and Ventilated 76
Fuel
Additives 276
Economy Driving 30
Filling a Portable Fuel
Container 279
Filling the Tank 277
Foreign Countries 276
Gauge 145
Low Fuel Warning Light 159
Management, Active 229
Prohibited Fuels 276
Recommended 275
Top Tier 275
Full-Size Spare Tire 398
Fuses
Engine Compartment Fuse
Block 354
Fuses and Circuit Breakers . . . 354
Fuses (cont'd)
Instrument Panel Fuse
Block 358, 360

G
Garage Door Opener 174
Programming 174
Gas Strut(s) 349
Gauges
Engine Coolant
Temperature 147
Engine Oil Pressure 146
Fuel 145
Odometer 145
Speedometer 144
Tachometer 145
Trip Odometer 145
Voltmeter 148
Warning Lights and
Indicators 139
General Information
Service and Maintenance 417
Towing 280
Vehicle Care 316
Glove Box 126
GM Mobility Reimbursement
Program 441

H
Halogen Bulbs 350
Hazard Warning Flashers 182
Head Restraints 69
Head-up Display 165
Headlamps
Aiming 350
Automatic 181
Bulb Replacement 350
Daytime Running
Lamps (DRL) 181
Flash-to-Pass 181
Headlamps, Front Turn
Signal, Sidemarker, and
Parking Lamps 351
High-Beam On Light 160
High/Low Beam Changer 180
Lamps On Reminder 160
Heated
Rear Seats 79
Steering Wheel 133
Heated and Ventilated Front
Seats 76
Heated Mirrors 59
Heater
Engine 225
Heating 190, 192
High-Beam On Light 160
High-Speed Operation 372
Hill and Mountain Roads 208
Hill Descent Control (HDC) 248
Hill Descent Control Light 155
Hill Start Assist (HSA) 246
Hood 318
Horn 133
How to Wear Seat Belts
Properly 81
HVAC 190, 192

I
Ignition Positions 219, 221
Ignition Transmission Lock
Check 347
Immobilizer 56
Indicator
Pedestrian Ahead 156
Vehicle Ahead 156
Infants and Young Children,
Restraints 101
Information
Publication Ordering 446
Infotainment 189
Infotainment System 450
Instrument Cluster 140
Interior Rearview Mirrors 61
Introduction 2

J
Jump Starting - North
America 399

K
Keyless Entry
Remote (RKE) System 34, 42
Keys 31

L
Labeling, Tire Sidewall 364
Lamps
Daytime Running (DRL) 181
Dome 185
Exterior Cargo 184
Exterior Controls 178
Exterior Lamps Off
Reminder 180
Exterior Lighting Battery
Saver 188
License Plate 353
Malfunction Indicator
(Check Engine) 151
On Reminder 160
Reading 186
Lane Change Alert (LCA) 271
Lane Departure
Warning (LDW) 273
Lane Keep Assist (LKA) 273

Lane Keep Assist Light 156
Lap-Shoulder Belt 83
LATCH System
Replacing Parts after a Crash 118
LATCH, Lower Anchors and Tethers for Children 107
LED Lighting 351
Lighting
Entry 186
Exit 186
Illumination Control 185
LED 351
Task 184
Lights
Airbag Readiness 149
Antilock Brake System (ABS) Warning 155
Brake System Warning 153
Charging System 151
Check Engine (Malfunction Indicator) 151
Cruise Control 160
Door Ajar 161
Driver Mode Control 158
Electric Parking Brake 154
Electronic Stability Control (ESC), Off 157
Lights (cont'd)
Engine Coolant Temperature Warning 158
Engine Oil Pressure 159
Flash-to-Pass 181
Four-Wheel-Drive 155
Front Fog Lamp 160
High-Beam On 160
High/Low Beam Changer 180
Hill Descent Control 155
Lane Keep Assist 156
Low Fuel Warning 159
Seat Belt Reminders 149
Security 160
Service Electric Parking Brake 154
Tire Pressure 158
Tow/Haul Mode 155
Traction Off 156
Limited-Slip Differential 254
Locking Rear Axle 254
Locks
Automatic Door 47
Delayed Locking 46
Door 45
Lockout Protection 47
Power Door 46
Safety 47
Loss of Control 202
Low Fuel Warning Light 159
Low-Profile Tires 364
Lower Anchors and Tethers for Children (LATCH System) 107
Lumbar Adjustment 72
Front Seats 72

M

Maintenance
Records 432
Maintenance and Care
Additional 426
Maintenance Schedule 419
Recommended Fluids and Lubricants 429
Transfer Case 238
Malfunction Indicator Lamp 151
Manual Mirrors 57
Manual Mode 234
Manual Windows 64
Memory Features 13
Memory Seats 74
Messages
Engine Power 169
Vehicle 169
Vehicle Speed 169

Mirror
Rear Camera 61
Mirrors
Automatic Dimming 59
Automatic Dimming
Rearview 61
Blind Spot 59
Convex 57
Folding 58
Heated 59
Manual 57
Manual Rearview 61
Power 58
Tilt in Reverse 60
Mirrors, Interior Rearview 61
Mode 249
Driver Control 249
Monitor System, Tire
Pressure 373

N

Navigation
Connected Services 459
New Vehicle Break-In 218
Noise Control System 346

O

Odometer 145
Odometer (cont'd)
Trip 145
Off-Road 202
Driving 202
Recovery 201
Oil
Engine 325
Engine Oil Life System 327
Engine Oil Pressure Gauge . . . 146
Pressure Light 159
Older Children, Restraints 100
Online Owner Center 440
OnStar 450
OnStar Additional
Information 453
OnStar Emergency 452
OnStar Overview 451
OnStar Security 453
Operating Mode
Overheated Engine
Protection 337
Operation
Fog Lamps 183
Outlets
Power 134
Overheated Engine
Protection Operating Mode 337
Overheating, Engine 335

P

Park
Shifting Into 227
Shifting Out of 229
Park Assist 258
Parking
Brake and P (Park)
Mechanism Check 347
Extended 230
Over Things That Burn 229
Parking or Backing
Assistance Systems 258
Passenger Airbag Status
Indicator 150
Passenger Compartment Air
Filter 196
Passenger Sensing System 93
Pedestrian Ahead Indicator 156
Perchlorate Materials
Requirements, California 317
Personalization
Vehicle 170
Pickup Conversion to
Chassis Cab 314
Power
Door Locks 46
Mirrors 58
Outlets 134

Power (cont'd)
Protection, Battery 187
Retained Accessory (RAP) ... 227
Seat Adjustment 71
Windows 64
Power Assist Steps 54
Pregnancy, Using Seat Belts 85
Privacy
Vehicle Data Recording 449
Program
Courtesy Transportation 443
Prohibited Fuels 276
Proposition
65 Warning,
California .....317, 341, 399, Back Cover
Publication Ordering
Information 446

R

Radio Frequency Statement 447
Reading Lamps 186
Rear Axle 345
Locking 254
Rear Camera Mirror 61
Rear Seats 78
Heated 79
Rear Storage 127
Rear Vision Camera (RVC) 258
Rear Windows 66
Rearview Mirrors 61
Automatic Dimming 61
Reclining Seatbacks 72
Recommended
Fuel 275
Recommended Fluids and
Lubricants 429
Records
Maintenance 432
Recreational Vehicle Towing 403
Reimbursement Program,
GM Mobility 441
Remote Keyless Entry
(RKE) System 34, 42
Remote Vehicle Start 44
Replacement Parts
Airbags 99
Maintenance 431
Replacing Airbag System 99
Replacing LATCH System
Parts after a Crash 118
Replacing Seat Belt System
Parts after a Crash 86
Reporting Safety Defects
Canadian Government 448
General Motors 448
Reporting Safety Defects (cont'd)
U.S. Government 447
Restraints
Where to Put 105
Retained Accessory
Power (RAP) 227
Reverse Tilt Mirrors 60
Ride Control Systems
Enhanced Traction
System (ETS) 254
Roads
Driving, Wet 207
Roadside Assistance
Program 441
Roof
Sunroof 66
Rotation, Tires 380
Routing, Engine Drive Belt 436
Running the Vehicle While
Parked 231

S

Safety Defects Reporting
Canadian Government 448
General Motors 448

Safety Defects Reporting (cont'd)
U.S. Government 447
Safety Locks 47
Safety System Check 85
Scheduling Appointments 443
Seat Belts 80
Care 86
Extender 85
How to Wear Seat Belts Properly 81
Lap-Shoulder Belt 83
Reminders 149
Replacing after a Crash 86
Use During Pregnancy 85
Seats
Adjustment, Front 70
Center Seat 71
Head Restraints 69
Heated and Ventilated Front 76
Heated, Rear 79
Lumbar Adjustment, Front 72
Memory 74
Power Adjustment, Front 71
Rear 78
Reclining Seatbacks 72
Underseat Storage 127
Securing Child Restraints 118, 122
Security
Light 160
OnStar 453
Vehicle 55
Vehicle Alarm 55
Service 197
Accessories and Modifications 317
Climate Control System 190
Doing Your Own Work 318
Maintenance Records 432
Maintenance, General Information 417
Parts Identification Label 433
Scheduling Appointments 443
Service Electric Parking Brake Light 154
Services
Special Application 425
Servicing the Airbag 97
Shifting
Into Park 227
Out of Park 229
Side Blind Zone Alert (SBZA) 270
Signals, Turn and Lane-Change 183
Snow Plow 311
Special Application Services 425
Specifications and Capacities 434
Speedometer 144
Start Vehicle, Remote 44
Starter Switch Check 347
Starting the Engine 223
Steering 201
Heated Wheel 133
Wheel Adjustment 132
Wheel Controls 133
Steps
Power Assist 54
Stop/Start System 224
Stoplamps and Back-up Lamps
Bulb Replacement 351
Storage
Rear 127
Storage Areas
Center Console 127
Floor Console 128
Glove Box 126
Underseat 127
Storage Compartments 126
Struts
Gas 349
Stuck Vehicle 210
Sun Visors 66
Sunroof 66

Symbols 3
System
Brake Pad Life 339
Engine Air Filter Life 329
Forward Collision
Alert (FCA) 264
Infotainment 189, 450
Noise Control 346
Systems
Driver Assistance 257

T

Tachometer 145
Tailgate 48
Taillamps
Bulb Replacement 351
Task Lighting 184
Text Telephone (TTY) Users 440
Theft-Deterrent Systems 56
Immobilizer 56
Time 134
Tires 362
All-Season 363
All-Terrain 364
Buying New Tires 382
Chains 386
Changing 389
Designations 367
Tires (cont'd)
Different Size 383
Full-Size Spare 398
If a Tire Goes Flat 387
Inspection 379
Low Profile 364
Pressure 371, 372
Pressure Light 158
Pressure Monitor Operation . . 374
Pressure Monitor System 373
Rotation 380
Sidewall Labeling 364
Terminology and Definitions . . 368
Uniform Tire Quality
Grading 384
Wheel Alignment and Tire
Balance 385
Wheel Replacement 385
When It Is Time for New
Tires 381
Winter 363
Top Tier Fuel 275
Tow/Haul Mode 237
Tow/Haul Mode Light 155
Towing
Driving Characteristics 280
Equipment 289
General Information 280
Towing (cont'd)
Recreational Vehicle 403
Trailer 285
Trailer Sway Control (TSC) . . . 298
Vehicle 402
Traction
Limited-Slip Differential 254
Off Light 156
Traction Control/Electronic
Stability Control 246
Trailer
Sway Control (TSC) 298
Towing 285
Trailer Towing
App 300
Trailering App 300
Transfer Case 238
Transmission
Automatic 231
Fluid, Automatic 329
Transportation Program,
Courtesy 443
Trip Odometer 145
Truck-Camper Loading
Information 216
Turn and Lane-Change
Signals 183

Turn Signal
Bulb Replacement 351

U

Underseat Storage 127
Uniform Tire Quality Grading ... 384
Universal Remote System 174
Operation 177
Programming 174
Using This Manual 2

V

Vehicle
Alarm System 55
Canadian Owners 2
Control 200
Identification Number (VIN) ... 433
Load Limits 211
Messages 169
Personalization 170
Remote Start 44
Security 55
Speed Messages 169
Towing 402
Vehicle Ahead Indicator 156
Vehicle Care
Tire Pressure 371
Vehicle Data Recording and
Privacy 449
Ventilation, Air 196
Visors 66
Voltmeter Gauge 148

W

Warning
Brake System Light 153
Caution and Danger 2
Lane Departure (LDW) 273
Warning Lights, Gauges, and
Indicators 139
Warnings
Hazard Flashers 182
Washer Fluid 338
Wheels
Alignment and Tire Balance .. 385
Different Size 383
Replacement 385
When It Is Time for New
Tires 381
Where to Put the Restraint 105
Windows 63
Manual 64
Power 64
Rear 66
Windshield
Replacement 349
Wiper/Washer 133
Winter
Driving 208
Winter Tires 363
Wiper Blade Replacement 348
Wireless Charging 137

WARNING

Operating, servicing and maintaining a passenger vehicle or off-highway motor vehicle can expose you to chemicals including engine exhaust, carbon monoxide, phthalates, and lead, which are known to the State of California to cause cancer and birth defects or other reproductive harm. To minimize exposure, avoid breathing exhaust, do not idle engine except as necessary, service your vehicle in a well-ventilated area and wear gloves or wash your hands frequently when servicing your vehicle. For more information go to www.P65Warnings.ca.gov/passenger-vehicle.

Certified Service

23400205 C