FIAT PANDA

OWNER HANDBOOK

WHY CHOOSING GENUINE PARTS

We really know your car because we invented, designed and built it: we really know every single detail.
At **Fiat Service authorised workshops** you can find technicians directly trained by us, offering quality and professionalism for all service operations.
Fiat workshops are always close to you for the regular servicing operations, season checks and practical recommendations by our experts.
With Fiat Genuine Parts you keep the reliability, comfort and performance features of your new car unchanged in time: that's why you bought it for.
Always ask for Genuine Parts for the components used on our cars; we recommend them because they come from our steady commitment in research and development of highly innovative technologies.
For all these reasons: **rely on Genuine Parts, because they are the only ones designed by Fiat for your car.**

SAFETY: BRAKING SYSTEM

ENVIRONMENT: PARTICULATE FILTERS, CLIMATE CONTROL MAINTENANCE

COMFORT: SUSPENSION AND WINDSCREEN WIPERS

PERFORMANCE: SPARK PLUGS, INJECTORS AND BATTERIES

LINEACCESSORI ROOF RACK BARS, WHEEL RIMS

CHOOSING GENUINE PARTS IS THE MOST NATURAL CHOICE

PERFORMANCE

COMFORT

SAFETY

AMBIENT

ACCESSORIES

VALUES

HOW TO RECOGNISE GENUINE PARTS

To recognise a **Genuine Part**, check **that the component bears our brands**, always clearly visible on Genuine Parts, from the braking system to windscreen wipers, from shock absorbers to air cleaner.
All **Genuine Parts** undergo **strict controls**, both during design and manufacturing stages, by specialists using **vanguard materials**, to **test the component reliability.**
This to guarantee **performance** and **safety** for you and your passengers on board, for a long time.
Always ask for and make sure a **Genuine Part** has been used.

Air cleaner

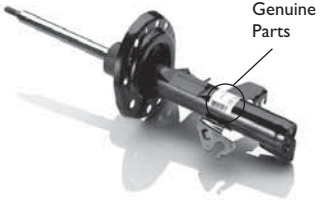

Shock absorber

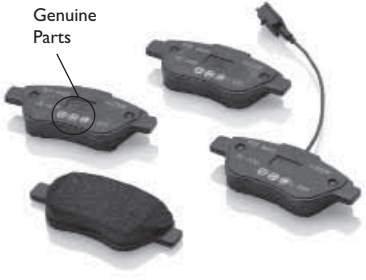

Brake pads

Dear Customer,

We would like to congratulate and thank you for choosing Fiat.

We have written this handbook to help you get to know all the features of your car and use it in the best possible way.

You are recommended to read it right through before taking to the road for the first time.

It contains important information, advice and instructions for the use of the car which will help you get the very best out of your Fiat. The handbook also provides a description of special features and tips as well as essential information for correct care, maintenance, safe car driving and use and preservation of your Fiat over time.

Carefully read the warnings and indications marked with the following symbols:

personal safety;

car safety;

environmental protection.

The enclosed Warranty Booklet lists the services that Fiat offers to its Customers:

❒ the Warranty Certificate with terms and conditions for maintaining its validity;

❒ the range of additional services available to Fiat Customers.

We are sure that these will help you get in touch with your new car and appreciate it and the care provided by the people at Fiat.

Enjoy reading. Happy motoring!

This Owner Handbook describes all the versions of the Fiat Panda. As a consequence, you should only consider the information which is related to the trim level, engine and version that you have purchased. All data contained in this publication are purely indicative. Fiat Group Automobiles can modify the specifications of the vehicle model described in this publication at any time, for technical or commercial reasons. For further information, contact a Fiat Dealership.

ESSENTIAL INFORMATION!

REFUELLING

Petrol engines: only refuel with unleaded petrol with octane rating (RON) not less than 95 in compliance with the European specification EN228.

The use of petrol that does not conform to the above-mentioned specification will cause the EOBD warning light to switch on and the irregular operation of the engine.

Diesel engines: only refuel with diesel for motor vehicles in compliance with the European specification EN590. The use of other products or mixtures may damage the engine beyond repair and consequently invalidate the warranty.

STARTING THE ENGINE

Make sure that the handbrake is engaged; place the gear lever in neutral. Fully depress the clutch pedal, without pressing the accelerator, then turn the ignition key to MAR-ON and wait for the warning light to switch off (and warning light for diesel versions); turn the ignition key to AVV and release it as soon as the engine starts.

PARKING ON FLAMMABLE MATERIAL

The catalytic converter develops high temperatures during operation. Do not park the car on grass, dry leaves, pine needles or other flammable material: fire hazard.

RESPECTING THE ENVIRONMENT

The car is fitted with a system that allows continuous diagnosis of the components related to emissions to ensure increased respect for the environment.

ELECTRICAL ACCESSORIES

If, after buying the car, you decide to add electrical accessories (with the risk of gradually draining the battery), contact a Fiat Dealership. They will calculate the overall electrical requirement and check that the car's electrical system can support the required load.

SCHEDULED SERVICING

Correct maintenance of the car is essential for ensuring that it maintains its performance and its safety features, its environmental friendliness and low running costs for a long time to come.

THE OWNER MANUAL CONTAINS...

... important information, advice and warnings for correct use, driving safety and maintenance of your car over time. Special attention must be paid to the symbols provided (personal safety) (environmental protection) (car integrity).

INSTRUMENT PANEL

The presence and position of the controls, instruments and indicators may vary according to the different versions.

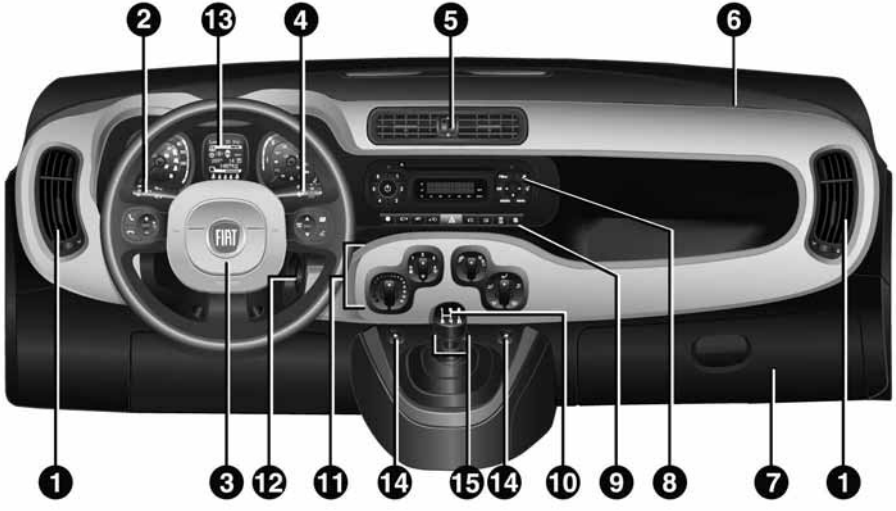

fig. 1 F0W0092

1. Adjustable and directable air diffusers 2. Exterior light control lever 3. Driver front airbag 4. Windscreen wiper/rear window wiper/trip computer control lever 5. Adjustable and directable centre air diffusers 6. Passenger front airbag 7. Glove compartment (for versions/markets where provided) 8. Car radio (for versions/markets, where provided) 9. Control buttons 10. Gear lever 11. Heating/ventilation/climate control system controls 12. Ignition switch 13. Instrument panel 14. Electric front windows 15. ECO/ASR OFF buttons (for versions/markets, where provided)

GETTING TO KNOW YOUR CAR
SAFETY
STARTING AND DRIVING
WARNING LIGHTS AND MESSAGES
IN AN EMERGENCY
SERVICING AND MAINTENANCE
TECHNICAL SPECIFICATIONS
INDEX

CONTROL PANEL AND INSTRUMENTS

The instrument background colour and type may vary according to the version.

PETROL VERSIONS

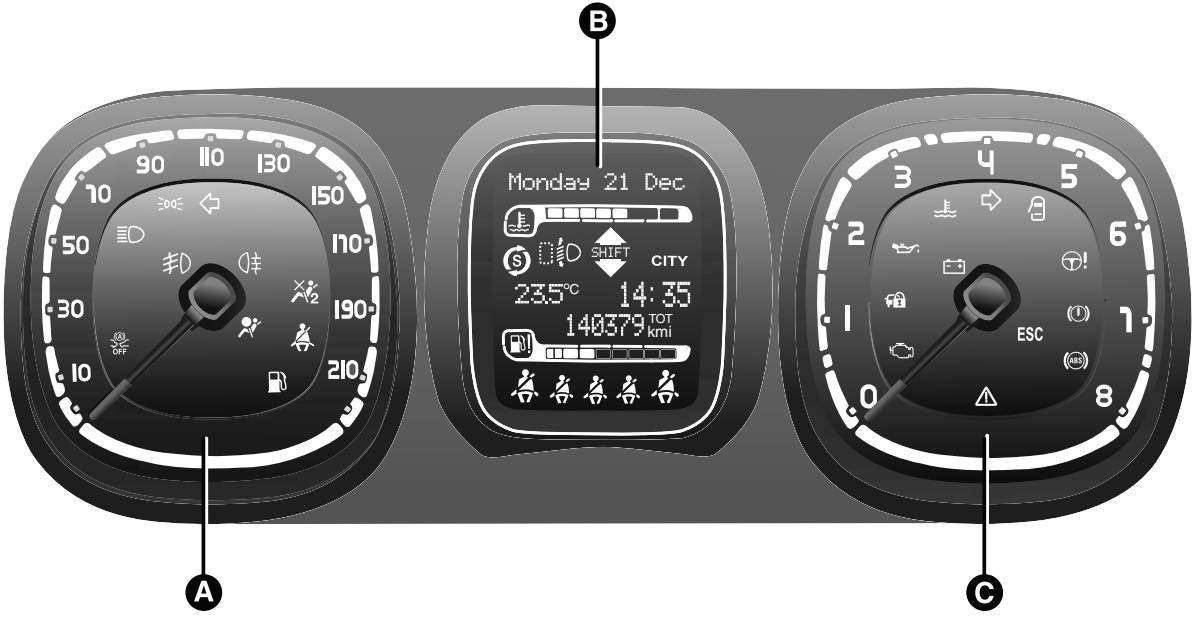

fig. 2 F0W0002

A. Speedometer (speed indicator) B. Multifunction display C. Rev counter

DIESEL VERSIONS

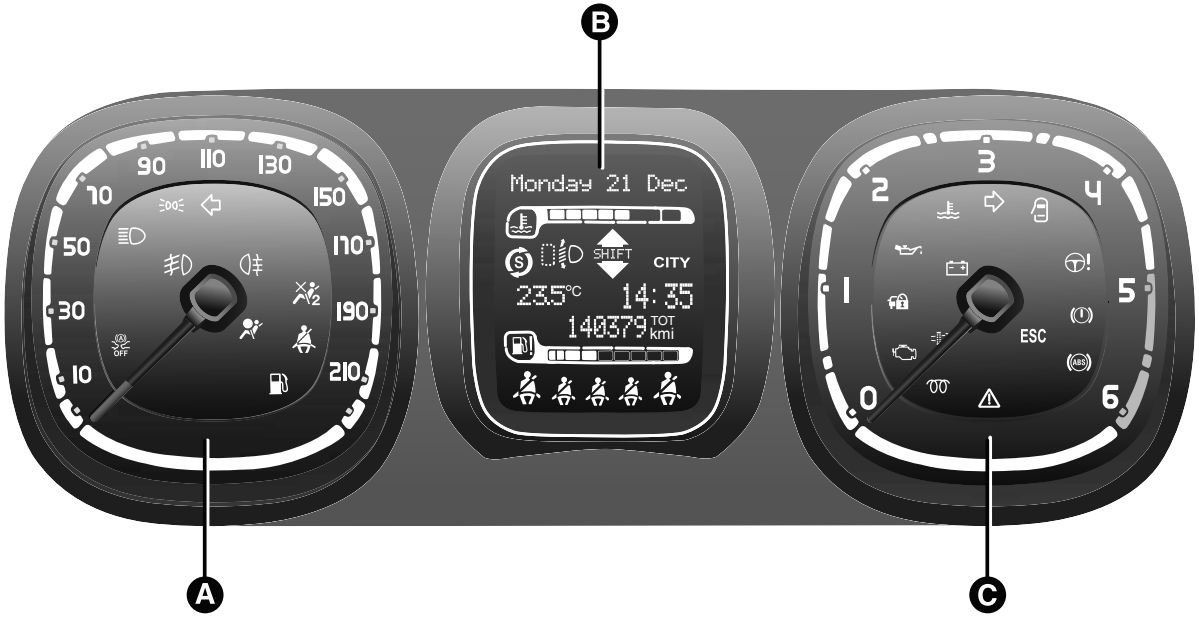

fig. 3

F0W0001

A. Speedometer (speed indicator) B. Multifunction display C. Rev counter

SPEEDOMETER (SPEED INDICATOR)

Shows the car speed (speedometer).

REV COUNTER

This indicates the engine rpm.

FUEL LEVEL GAUGE

The digital gauge A fig. 4 shows the amount of fuel in the tank.

The warning light fig. 4 switches on to indicate that 5 to 7 litres of fuel are left in the tank.

Do not travel with the fuel tank almost empty: possible gaps in fuel delivery could damage the catalytic converter.

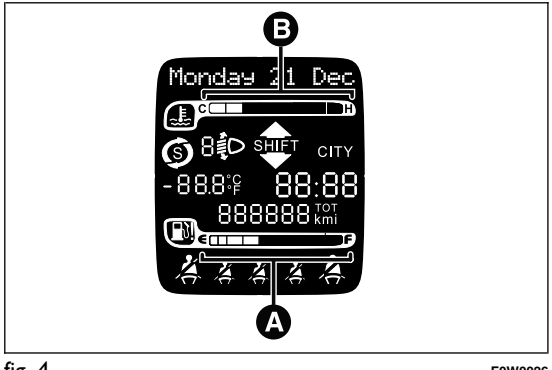

fig. 4 F0W0026

ENGINE COOLANT TEMPERATURE GAUGE

The digital indicator B fig. 4 shows the temperature of the engine coolant and starts supplying indications when the coolant temperature exceeds 50°C approx.

The first segment is always on to show that the system is operating correctly.

The warning light fig. 4 may switch on (together with a message on the display) to indicate that the coolant temperature is too high; in this case, stop the engine and contact a Fiat Dealership.

DISPLAY

With the ignition key removed, the display shows three values for a few seconds when a front door is opened: time, temperature and total milometer reading (in km or miles).

"STANDARD" SCREEN

The following information appears on the display fig. 5:

A Date

B Gear Shift Indicator (for versions/markets, where provided)

C Start&Stop function indication (for versions/ markets where provided)

D Time

E Odometer (display of distance travelled in kilometres/miles)

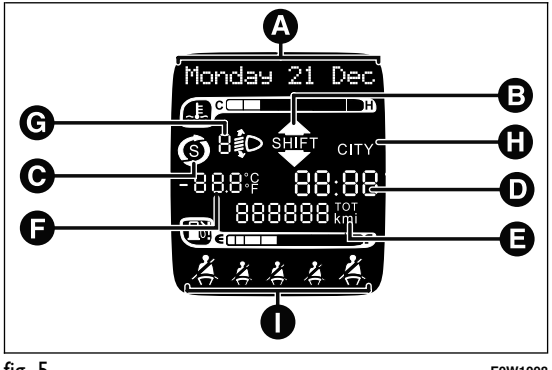

fig. 5 F0W1008

F Outside temperature (for versions/markets, where provided)

G Headlight alignment position (only with dipped headlights on)

H Dualdrive electric power steering engagement indication (CITY text)

I Seat belt indicators

GEAR SHIFT INDICATOR

The GSI (Gear Shift Indicator) system advises the driver to change gear through a specific indication on the control panel. Through the GSI, the driver is notified that changing gear will allow a reduction in fuel consumption.

When the SHIFT UP icon (▲ SHIFT) fig. 5 is shown on the display, the GSI is advising the driver to engage a higher gear, while the SHIFT DOWN (▼ SHIFT) icon advises the driver to engage a lower gear.

The indication in the instrument panel remains on until the driver changes gear or the driving conditions return to a situation where changing gear is not required to improve consumption.

CONTROL BUTTONS

These can be used to scroll through the display menu.

Note The symbol on the buttons depends on the version: ▲ and ▼ or ▲ and ▼.

▲ To scroll up through the screen and the related options or to increase the displayed value.

SET Press briefly to access the menu and/or go to next screen or to confirm the desired selection. Hold down to go back to the standard screen.

▼ To scroll down through the screen and the related options or to decrease the displayed value.

Buttons ▲ and ▼ activate different functions according to the following situations:

❒ within the menu, they allow you to scroll up and down;

❒ during setting operations, they increase or decrease values.

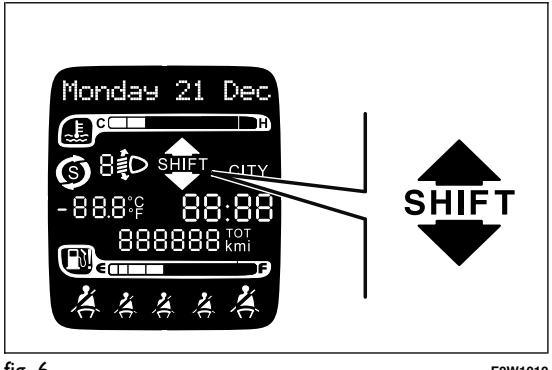

fig. 6 F0W1010

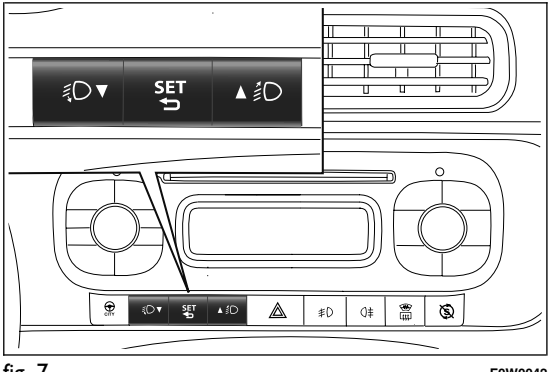

fig. 7 F0W0042

SETUP MENU

The menu comprises a series of options which can be selected using buttons ▲ and ▼ to access the different selection and setting operations (Setup) indicated below. Some options have a submenu. The menu can be activated by briefly pressing the SET button.

The menu includes the following items:

❒ MENU
❒ LIGHTING
❒ SPEED BEEP
❒ TRIP B ACTIVATION/DATA
❒ SET TIME
❒ SET DATE
❒ SEE RADIO
❒ AUTOCLOSE
❒ MEASUREMENT UNIT
❒ LANGUAGE
❒ WARNING VOLUME
❒ SEAT BELT BUZZER (for versions/markets, where provided)
❒ SERVICE
❒ AIRBAG/PASSENGER BAG (for versions/markets, where provided)
❒ CITY BRAKE C./COLLISION MITIGATION (for versions/markets, where provided)
❒ EXIT MENU

Selecting an option from the main menu without a submenu:

❒ briefly press the SET button to select the main menu option to be set;
❒ press buttons ▲ or ▼ (with single presses) to select the new setting;
❒ briefly press the SET button to store the new setting and to go back to the same main menu option selected previously.

Selecting an option from the main menu with a submenu:

❒ a short press on the SET button will display the first submenu option;
❒ press buttons ▲ or ▼ (with single presses) to scroll through all the submenu options;
❒ briefly press the SET button to select the displayed submenu option and to open the relevant set-up menu;
❒ press buttons ▲ or ▼ (with single presses) to select the new setting for this submenu option;
❒ Briefly press button SET to store the new setting and at the same time go back to the previously selected menu option.

MENU ITEMS

Menu

This option allows you to access the Setup Menu. Press the ▲ or ▼ fig. 7 button to select the various Menu items. Hold down the SET button to return to the standard screen.

Lighting (Interior car lighting adjustment) (with side lights on only)

With the side lights on, this function is used to set the brightness of the instrument panel, radio controls and automatic climate control system controls (for versions/markets, where provided) to 8 levels.

To adjust the brightness, proceed as follows:

press the SET button briefly: the previously set level will flash on the display;

press the ▲ or ▼ button to adjust the brightness level;

press the SET button briefly to return to the menu screen or hold the button down to return to the standard screen without storing.

Speed Beep (Speed limit)

This function is used to set the car speed limit (km/h or mph); the driver is alerted when this limit is exceeded.

To set the desired speed limit, proceed as follows:

❒ briefly press the SET button: the display will show the text (Speed Beep);

❒ press the ▲ or ▼ button to select speed limit activation (On) or deactivation (Off);

❒ if the function is on, press ▲ or ▼ to select the desired speed limit and then press SET to confirm.

Note Setting is possible between 30 and 200 km/h, or 20 and 125 mph, according to the previously set unit. See the "Measurement unit adjustment (Measurement unit)" paragraph described below. The setting will increase/decrease by 5 units each time the ▲/▼ button is pressed. Hold down the ▲/▼ button to automatically increase/decrease the setting rapidly. Complete the adjustment with single presses of the button when you approach the desired value.

❒ press the SET button briefly to return to the menu screen or hold the button down to return to the standard screen without storing.

To cancel the setting, proceed as follows:

❒ press the SET button briefly: "On" will flash on the display;

❒ press the ▼ button: "Off" will flash on the display;

❒ press the SET button briefly to return to the menu screen or hold the button down to return to the standard screen without storing.

Activation/Trip B data (Activating Trip B)

With this function it is possible to activate ("On") or deactivate ("Off") the Trip B display (partial trip). For more information see the "Trip computer" paragraph.

For activation/deactivation, proceed as follows:

❒ press the SET button briefly to make the display flash "On" or "Off" according to the previous setting;

❒ press the ▲ or ▼ button to make the adjustment;

❒ press the SET button briefly to return to the menu screen or hold the button down to return to the standard screen without storing.

Time adjustment (Clock adjustment)

This function allows the clock to be set through two submenus: "Time" and "Format".

To carry out the adjustment, proceed as follows:

❒ press the SET button briefly: the display will show the two submenus "Time" and "Format";

❒ press the ▲ or ▼ button to switch between the two submenus;

❒ once you have selected the submenu to be changed, press the SET button briefly;

❒ when you select "Time", pressing SET briefly makes the "hours" flash on the display. press the ▲ or ▼ button to make the adjustment;

❒ press the SET button briefly: the "minutes" flash on the display. Press the ▲ or ▼ button to make the adjustment;

❒ if you select the "Format" submenu, pressing the SET button briefly makes the display mode flash on the display. Press the ▲ or ▼ button to select "12h" or "24h" mode. When you have carried out the desired adjustment, press the SET button briefly to return to the submenu screen or hold the button down to return to the main menu screen without storing.

Hold down the SET button again to return to the standard screen or to the main menu according to where you are in the menu.

IMPORTANT The setting will increase or decrease by one unit each time the ▲ or ▼ button is pressed. Holding the button down causes an automatic rapid increase/decrease. Complete the adjustment with single presses of the button when you approach the desired value.

Set date (Setting the date)

This function can be used to set the date (year - month - day).

To carry out the adjustment, proceed as follows:

- ❒ briefly press the SET button: the "year" will flash on the display;
- ❒ press the ▲ or ▼ button to make the adjustment;
- ❒ press the SET button briefly: the "month" will flash on the display;
- ❒ press the ▲ or ▼ button to make the adjustment;
- ❒ briefly press the SET button: the "day" will flash on the display;
- ❒ press the ▲ or ▼ button to make the adjustment;
- ❒ press the SET button briefly to return to the menu screen or hold the button down to return to the standard screen without storing.

IMPORTANT The setting will increase or decrease by one unit each time the ▲ or ▼ button is pressed. Holding the button down causes an automatic rapid increase/decrease. Complete the adjustment with single presses of the button when you approach the desired value.

See radio (audio information display)

With this function the display shows information about the sound system.

- ❒ Radio: selected radio station frequency or RDS message, automatic tuning activation or AutoSTore;
- ❒ Audio CD, MP3 CDs: track number;
- ❒ CD Changer: CD number and track number.

To show the sound system information on the display (On) or clear it (Off), proceed as follows:

- ❒ briefly press SET button, ON or OFF flashes on the display according to the previous setting;
- ❒ press the ▲ or ▼ button to select;
- ❒ press the SET button briefly to return to the menu screen or hold the button down to return to the standard screen without storing.

Autoclose (Automatic central locking with car in motion)

When activated (On), this function locks the doors automatically when the vehicle speed exceeds 20 km/h.

To activate or deactivate this function, proceed as follows:

- ❒ press the SET button briefly to make the display flash "On" or "Off" according to the previous setting;
- ❒ press the ▲ or ▼ button to select;

❒ press the SET button briefly to return to the submenu screen or hold the button down to return to the main menu screen without saving;

❒ hold the SET button down again to return to the standard screen or to the main menu according to where you are in the menu.

Measurement unit (Setting the measurement unit)

This function can be used to set the units through three submenus: "Distances", "Consumption" and "Temperature".

To set the desired unit of measurement, proceed as follows:

❒ briefly press SET to display the three submenus;

❒ press the ▲ or ▼ button to navigate through the three submenus;

❒ once you have selected the submenu to be changed, press the SET button briefly;

❒ if you select "Distances", pressing the button SET briefly makes the display show "km" or "mi" depending on the previous setting;

❒ press ▲ or ▼ to select

❒ if you select "Consumption", pressing button SET briefly makes "km/l", "l/100km" or "mpg" appear on the display depending on the previous setting;

If the set distance unit is "km", the display enables setting of the fuel consumption unit (km/l or l/100km). If the set distance unit is "mi", the display shows the amount of fuel consumed in "mpg".

❒ press the ▲ or ▼ button to select;

❒ if you select "Temperature", pressing the SET button briefly makes "°C" or "°F" appear on the display depending on the previous setting;

❒ press the ▲ or ▼ button to select;

❒ When you have made the adjustment, press the SET button briefly to return to the submenu screen or hold the button down to return to the main menu screen without storing.

❒ hold the SET button down again to return to the standard screen or to the main menu according to where you are in the menu.

Language (Language selection)

Display messages can be shown in different languages: Italian, English, German, Portuguese, Spanish, French, Dutch, Polish and Turkish.

To set the desired language, proceed as follows:

❒ briefly press the SET button: the previously set "language" starts flashing on the display;

❒ press the ▲ or ▼ button to select;

❒ press the SET button briefly to return to the menu screen or hold the button down to return to the standard screen without storing.

Warnings volume (Adjusting the failure/ warning acoustic signal volume)

With this function the volume of the buzzer which accompanies the display of any failure/warning can be adjusted to 8 levels.

To set the desired volume, proceed as follows:

❒ press the SET button briefly, making the display flash the previously set volume level;

❒ press the ▲ or ▼ button to select;

❒ press the SET button briefly to return to the menu screen or hold the button down to return to the standard screen without storing.

Belt buzzer (Buzzer activation for SBR indication) (for versions/markets, where provided)

This function can only be displayed after a Fiat Dealership has deactivated the SBR system (see "SBR system" in the "Safety" chapter).

Service (Scheduled servicing)

Using this function you can display information about the mileage or daily intervals for car servicing. With the Service function it is also possible to view the interval (in kilometres or miles) before the next engine oil change is due.

To consult this information, proceed as follows:

❒ briefly press the SET button, which makes the display show the service interval in kilometres (km) or miles (mi) according to the previous setting (see "Distance measurement units" paragraph);

❒ press the SET button briefly to return to the menu screen or hold it down to return to the standard screen.

Note The “Scheduled Servicing Plan” requires the car to be serviced every 30,000 km (or 18,000 miles) for petrol versions and every 35,000 km (or 21,000 miles) for diesel versions. This message is displayed automatically when the key is turned to MAR-ON, starting at 2,000 km (or equivalent value in miles) from when the next service is due and reappearing every 200 km (or equivalent value in miles). Below 200 km servicing indications are more frequent. The display will be in km or mi depending on the measurement unit settings. When the next scheduled service is approaching and the key is turned to MAR, the word “Service” will appear on the display, followed by the number of kilometres or miles left before servicing is due. Go to a Fiat Dealership, where the "Scheduled Servicing Plan" operations will be performed and the message will be reset.

Airbag/Passenger bag (Passenger side front airbag and side bag (chest & pelvis protection - for versions/markets, where provided) activation/deactivation)

This function allows the passenger side airbag to be activated/deactivated.

Proceed as follows:

❒ press the SET button and, after the message "Bag pass: Off" (to deactivate) or "Bag pass: On" (to activate) is displayed by pressing buttons ▲ and ▼, press the SET button again;

❒ a confirmation message will appear on the display;

❒ by pressing the ▲ or ▼ buttons select "Yes" (to confirm activation/deactivation) or "No" (to cancel);

❒ press the SET button briefly; a message confirming the selection is displayed and you return to the menu screen. Hold down the button to return to the standard screen without storing.

City Brake Control - "Collision Mitigation"
(for versions/markets, where provided)

This function is used to activate ("On") or de-activate ("Off") the City Brake Control - "Collision Mitigation" system.

To adjust, proceed as follows:

❒ press button SET briefly. "On" or "Off" flash on the display, according to what has been previously set;

❒ a confirmation message will appear on the display;

❒ by pressing the ▲ or ▼ buttons select "Yes" (to confirm activation/deactivation) or "No" (to cancel);

❒ press the SET button briefly; a message confirming the selection is displayed and you return to the menu screen. Hold down the button to return to the standard screen without storing.

When the system is deactivated the dedicated warning light in the instrument panel switches on (see chapter "Warning lights and Messages").

Exit Menu

The last function, which closes the cycle of settings listed in the menu screen. Pressing the SET button briefly will return the display to the standard screen without storing. Press the ▼ button to return to the first menu item (Speed Beep).

TRIP COMPUTER

General information

The Trip computer is used to display information on car operation when the key is turned to MAR-ON. Two separate trips, called “Trip A” and “Trip B”, are provided to monitor the entire mission (journey) in a reciprocally independent manner.

Both functions can be reset (reset - start of a new journey).

“Trip A” is used to display the figures relating to:

❒ Outside temperature (for versions/markets where provided)

❒ Range

❒ Distance covered

❒ Average consumption

❒ Instantaneous consumption

❒ Average speed

❒ Trip time (driving time).

“Trip B” is used to display the figures relating to:

❒ Distance travelled B

❒ Average consumption B

❒ Average speed B

❒ Trip time B (driving time).

Note The “Trip B” function may be disabled (see “Activating Trip B”). The “Range” and “Instant consumption" parameters cannot be reset.

Values displayed

Range

This indicates the approximate distance which can be travelled with the amount of fuel present in the tank. “- - - -” will appear on the display in the following cases:

❒ range value lower than 50 km (or 30 mi)

❒ car parked with engine running for an extended period.

IMPORTANT The range value variation can be affected by several factors: driving style, type of route (motorway, urban, mountain roads, etc.), conditions of use (load, tyre pressures, etc.). Trip planning must therefore take the above into account.

Distance covered

Shows the distance covered since the start of the new journey.

Average consumption

Shows the approximate average fuel consumption since the start of the new journey.

Instantaneous consumption

This indicates the fuel consumption. The value is constantly updated. The display will show “- - - -” if the car is parked with the engine running.

Average speed

This shows the average car speed as a function of the overall time elapsed since the start of the new journey.

Trip time

The time elapsed since the start of a new journey.

TRIP BUTTON

This is located on the right stalk. fig. 8 With the ignition key turned to MAR, this button allows you to view the previously described values as well as reset them to begin a new journey:

❒ short press: display various values;

❒ long press: reset values and start a new journey.

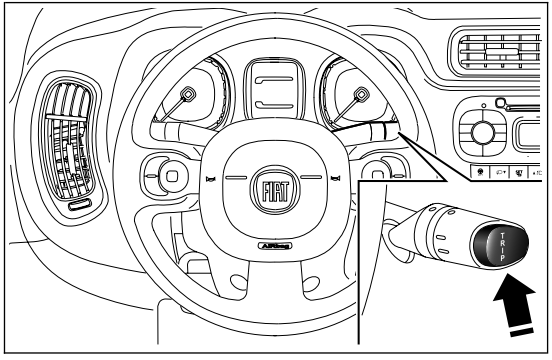

fig. 8 F0W0079

New mission

This begins after a reset:

❒ "manual" resetting by the user, by pressing the relevant button;

❒ "automatic" resetting, when the "Trip distance" reaches 99999.9 km or when the "Travel time" reaches 999:59 (999 hours and 59 minutes);

❒ after disconnection/reconnection of the battery.

IMPORTANT The reset operation when "Trip A" or "Trip B" details are being displayed only resets the values associated with the function displayed.

Start of journey procedure

With ignition key at MAR, press and hold down the TRIP button for more than 2 seconds to reset.

Exiting the Trip Function

You can automatically exit the TRIP function once all the values have been displayed or by holding the SET button down for more than 1 second.

SYMBOLS

Some car components have coloured labels whose symbols indicate precautions to be observed when using this component. Under the bonnet there is also a label that summarises all the symbols.

THE FIAT CODE SYSTEM

To further protect your car from theft, it has been fitted with an engine immobilising system. It is automatically activated when the ignition key is removed.

Each key contains an electronic device which modulates the signal emitted during ignition by an antenna built into the ignition device. The signal is the "password", different every time the car is started, through which the control unit recognises the key and enables starting.

OPERATION

Each time the vehicle is started turning the ignition key to MAR-ON, the Fiat CODE system control unit sends an acknowledgement code to the engine control unit to deactivate the immobiliser. The code is sent only if the Fiat CODE system control unit has acknowledged the code received from the key.

Each time the ignition key is turned to STOP, the Fiat CODE system deactivates the functions of the engine management control unit. If, during starting, the code is not correctly recognised, the warning light switches on in the instrument panel. In this case, turn the key to STOP and then to MAR-ON; if it is still locked, try again with the other keys that come with the vehicle. Contact a Fiat Dealership if you still cannot start the engine.

Warning light switching on while driving

If the warning light switches on, this means that the system is running a self-diagnosis (for example for a voltage drop). Should the fault persist, contact a Fiat Dealership.

THE KEYS

The electronic components inside the key may be damaged if the key is subjected to strong shocks. In order to ensure complete efficiency of the electronic devices inside the keys, they should never be exposed to direct sunlight.

KEY WITHOUT REMOTE CONTROL

The metal insert A fig. 9 operates:

❒ the ignition switch;

❒ the door lock;

❒ the boot lock.

To request duplicates of the key, go to a Fiat Dealership, taking an ID document and the car ownership documents.

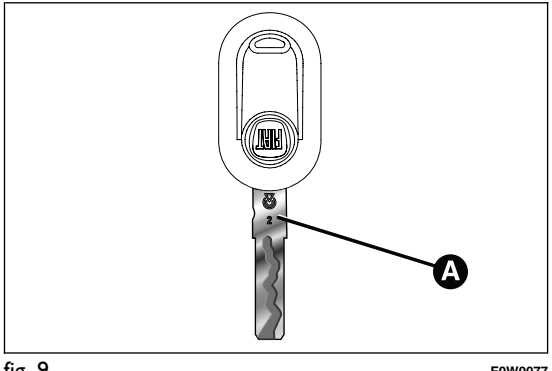

fig. 9 F0W0077

KEY WITH REMOTE CONTROL
(for versions/markets, where provided)

The metal insert A fig. 10 operates:

❒ the ignition switch;

❒ the door lock.

Press button B fig. 10 to open/close the metal insert.

Unlocking the doors and the tailgate

Briefly press button 🔓: for unlocking of doors and luggage compartment, timed switching-on of internal roof lights and double flashing of direction indicators (for versions/markets, where provided).

The doors are unlocked automatically if the fuel cut-off system intervenes.

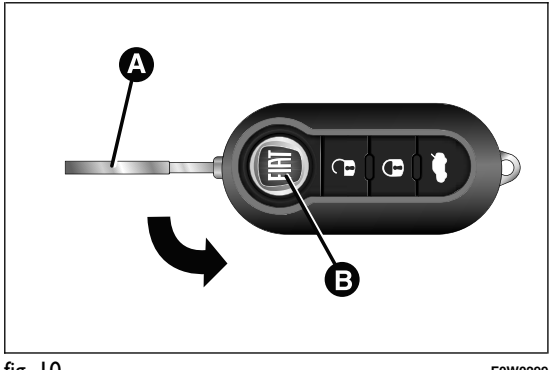

fig. 10 F0W0299

Locking the doors and the tailgate

Briefly press button 🔒: for locking of doors and luggage compartment, with switching-off of roof light and single flashing of direction indicators (for versions/markets, where provided).

If one or more doors are open, the doors will not be locked. This is indicated by a rapid flashing of the direction indicators (for versions/markets, where provided). If the luggage compartment is open, the doors will not be locked.

When a speed of over 20 km/h is reached, the doors will be locked automatically if this specific function was set.

Opening the luggage compartment

Press the button to open the luggage compartment using the remote control.

The direction indicators will flash twice to indicate that the luggage compartment has been opened.

The electronic components inside the key may be damaged if the key is subjected to strong shocks. In order to ensure complete efficiency of the electronic devices inside the key, it should never be exposed to direct sunlight.

Request for additional remote controls

The system can recognise up to 8 keys with incorporated remote control. Should a new remote control be necessary, go to a Fiat Dealership, taking an ID document and the car ownership documents.

Changing battery - key with remote control

To replace the battery, proceed as follows:

- ❒ press button A fig. 11 and open the metal insert B;
- ❒ turn screw C to using a fine bit screwdriver;
- ❒ take out the battery case D and replace the battery E making sure that polarities are correct;
- ❒ refit the battery case D inside the key and lock it by turning screw C to .

Used batteries must be disposed of, as specified by law, in the special containers. Otherwise take them to a Fiat Dealership, which will deal with their disposal.

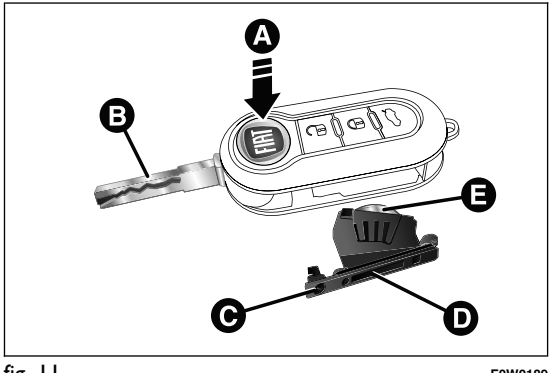

fig. 11 F0W0189

IGNITION DEVICE

The key can be turned to 3 different positionsfig. 12:

❒ STOP: engine off, key can be removed, steering column locked. Some electrical devices (e.g. sound system, central door locking system, etc.) can operate;

❒ MAR-ON: driving position. All electrical devices are enabled;

❒ AVV: engine start-up.

The ignition switch is fitted with a safety system that requires the ignition key to be turned back to STOP if the engine does not start, before the starting operation can be repeated.

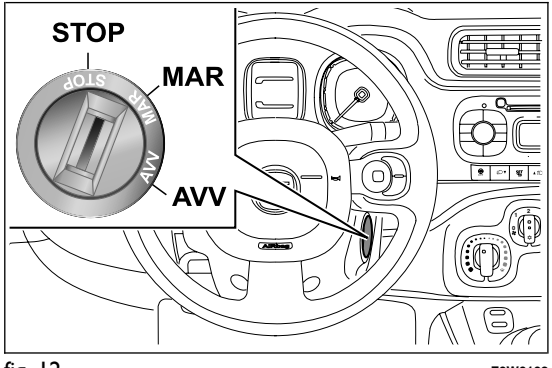

fig. 12 F0W0102

WARNING

If the ignition device has been tampered with (e.g. an attempted theft), have it checked over by a Fiat Dealership before driving again.

WARNING

Always remove the key when you leave your car to prevent someone from accidentally operating the controls. Remember to engage the handbrake. Engage 1st gear if the car is parked uphill or reverse if the car is parked downhill. Never leave children unattended in the car.

STEERING LOCK

Engagement: when the key is in position STOP, remove the key and turn the steering wheel until it is locked.

Disengagement: move the steering wheel slightly as you turn the ignition key to MAR-ON.

WARNING

It is absolutely forbidden to carry out any after-market operation involving steering system or steering column modifications (e.g.: installation of anti-theft device) that could badly affect performance and safety, invalidate the warranty and also result in non-compliance of the car with type-approval requirements.

WARNING

Never remove the key while the car is moving. The steering wheel will lock as soon as it is turned. This holds true for cars being towed as well.

SEATS

WARNING

All adjustments must be made with the car stationary.

WARNING

If a side bag is fitted, it is dangerous to use seat covers not available from Lineaccessori Fiat.

FRONT SEATS

Lengthwise adjustment

Lift lever A fig. 13 and push the seat forwards or backwards: in driving position your arms should rest on the rim of the steering wheel.

WARNING

Once you have released the adjustment lever, always check that the seat is locked on the guides by trying to move it back and forth. If the seat is not locked into place, it may unexpectedly slide and cause the driver to lose control of the car.

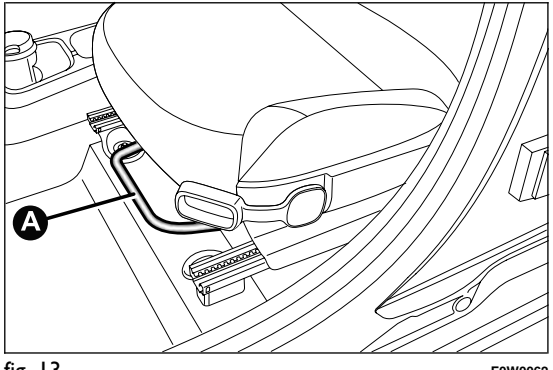

fig. 13 F0W0062

Height adjustment

(for versions/markets, where provided)

Adjust lever B fig. 14 upwards or downwards to obtain the required height.

IMPORTANT Carry out the adjustment whilst seated in the driver's seat.

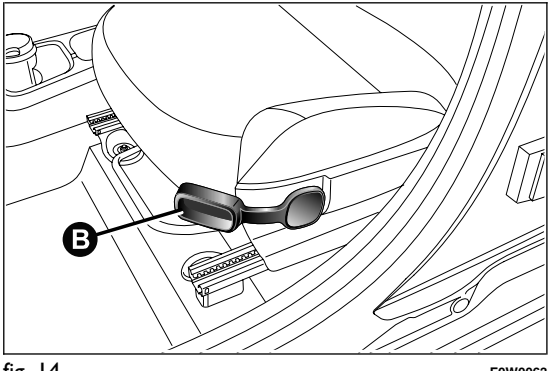

fig. 14 F0W0063

Backrest angle adjustment

Operate lever C fig. 15 until the desired position is reached, then release the lever.

Moving the fold-down passenger seat to table position (for versions/markets, where provided)

Move the seat fully backwards by operating lever A (see Lengthwise adjustment), lower the headrest (see Headrest, downward adjustment), operate lever C, fold the backrest down to the cushion and then release lever C.

Document holder pocket
(for versions/markets where provided)

On some versions the multifunction pocket can be removed from the seat backrest, using the two pullers of the zips in the pocket bottom fig. 16.

The removed pocket can be folded and closed with the buttons at its ends.

WARNING

If passengers are seating in the rear seats, remove all potentially dangerous objects which may cause injuries in case of accident.

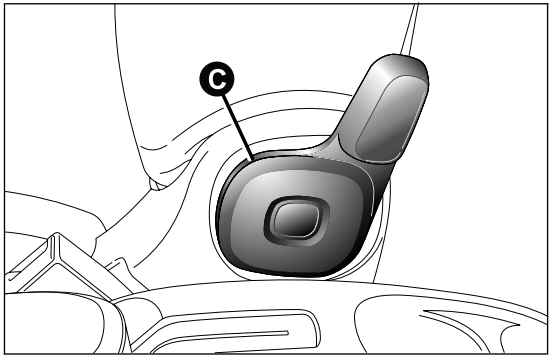

fig. 15 F0W0064

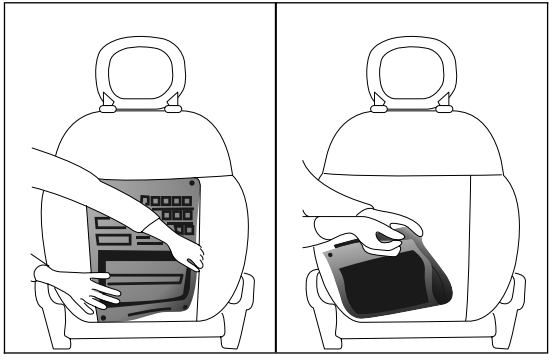

fig. 16 F0W0302

Electric front seat heating (for versions/markets, where provided)

To heat the cushion of the front seats, with the ignition key in MAR-ON, press respectively button A or B fig. 17.

To deactivate the function press the button again.

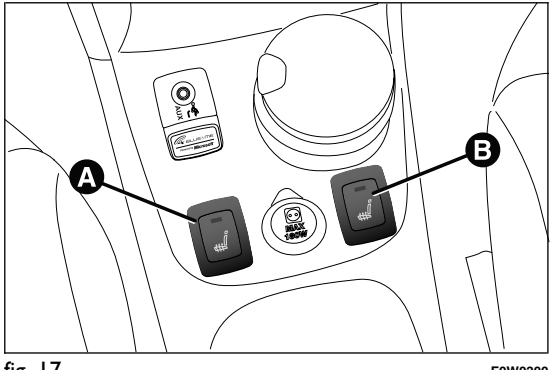

fig. 17 F0W0300

REAR SEATS

Sliding seats (for versions/markets, where provided)

To bring the seat to the wished position, pull lever A fig. 18 then adjust.

Folding seats (for versions/markets, where provided)

To tilt rear seats, refer to chapter "Extending the boot".

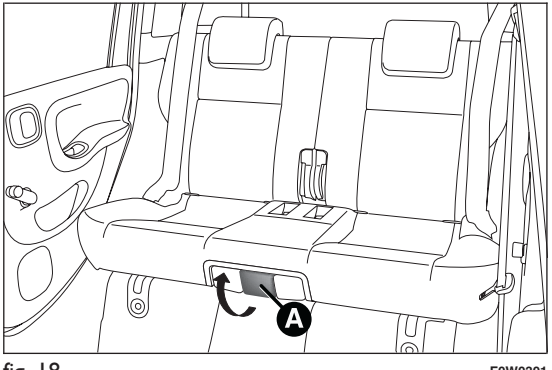

fig. 18 F0W0301

HEAD RESTRAINTS

FRONT

They are height-adjustable: to adjust them, operate as follows.

Upwards adjustment: raise the head restraint until it clicks into place.

Downwards adjustment: press button A fig. 19 and lower the head restraint.

"Anti-Whiplash" Device

The head restraints are equipped with an “Anti-Whiplash” device, which reduces the distance between head and head restraint in the event of a rear impact, thus mitigating the "whiplash" effect.

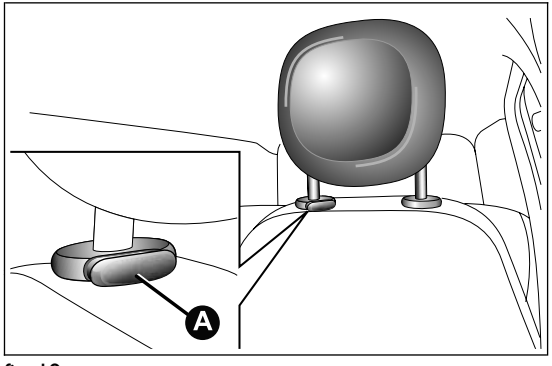

fig. 19 F0W0061

The head restraint may move when the backrest is pressed by the occupant's torso or hand: this behaviour is caused by the system and should not be considered a malfunction.

WARNING

All adjustments must be made with the car stationary. Head restraints must be adjusted so that the head, rather than the neck, rests on them. Only when they are adjusted in this manner can they serve their intended purpose.

WARNING

To make the best use of the head restraint's protective action, adjust the backrest so that you are sitting upright and keep your head as close as possible to the head restraint.

REAR
(for versions/markets, where provided)

Depending on the version, the rear seats may be fitted with two or three height-adjustable head restraints.

Upwards adjustment: raise the head restraint until it clicks into place.

Downwards adjustment: press button A fig. 20 and lower the head restraint.

Proceed as follows to remove the head restraints:

❒ raise the head restraints to their maximum height;

❒ press buttons A and B fig. 20 at the side of the two supports, then remove the head restraints by pulling them upwards.

IMPORTANT If the rear seats are used, always set the head restraints in the "completely raised" position.

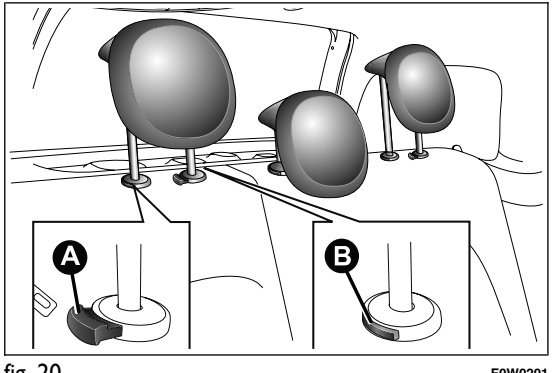

fig. 20 F0W0201

STEERING WHEEL

The steering wheel can be adjusted vertically.

To adjust, move lever A fig. 21 downwards to position 1, then adjust the steering wheel to the most suitable position and lock it in position by moving lever A to position 2.

WARNING

All adjustments must be carried out only with the vehicle stationary and engine off.

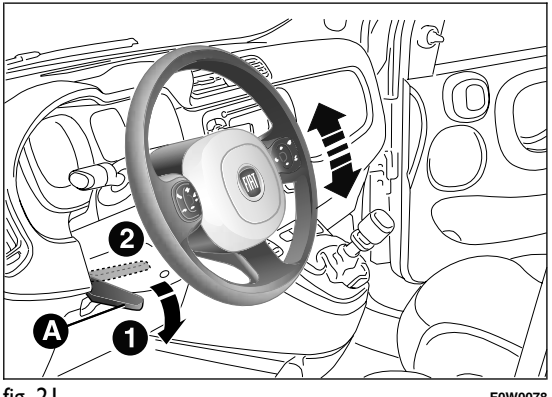

fig. 21 F0W0078

WARNING

It is absolutely forbidden to carry out any after-market operation involving steering system or steering column modifications (e.g. installation of anti-theft device) that could badly affect performance and safety, invalidate the warranty and also result in the car not meeting type-approval requirements.

REAR VIEW MIRRORS

REAR VIEW MIRROR

The mirror is fitted with a safety device that causes its release in the event of a violent impact with the passenger. Operate lever A fig. 22 to adjust the mirror into two different positions: normal or anti-glare.

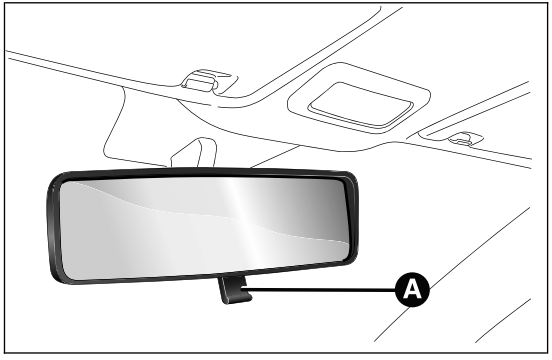

fig. 22 F0W0054

DOOR MIRRORS

Manual adjustment

From the inside of the car, operate lever A fig. 23 to adjust the mirror.

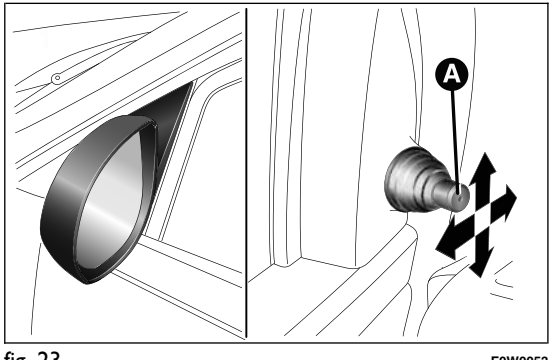

fig. 23 F0W0053

Electrical adjustment (for versions/markets, where provided)

The mirrors can be adjusted only if the ignition key is in MAR position.

To adjust proceed as follows:

❒ select the desired mirror (left or right) using switch A fig. 24 ;

❒ move switch A to position B and manipulate it to adjust the left door mirror;

❒ move switch A to position D and manipulate it to adjust the right door mirror.

Once you have finished the adjustment, return switch A to intermediate locking position C.

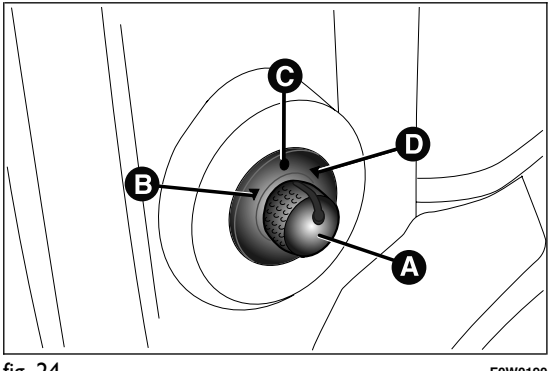

fig. 24 F0W0190

IMPORTANT When the heated rear window is activated, door mirror defrosting is activated (for versions/markets, where provided).

Manual folding

If necessary, fold the mirrors by moving them from position 1 (open) to position 2 (closed) fig. 25.

IMPORTANT When driving the mirrors must always be in position 1 (open).

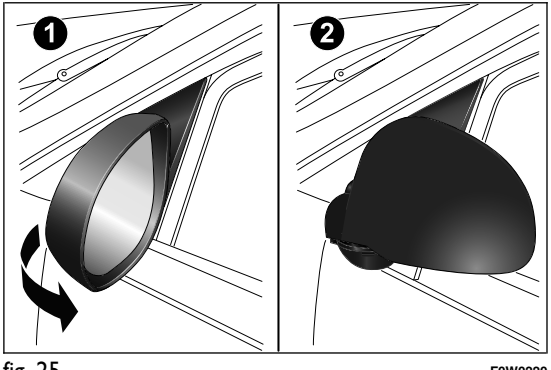

fig. 25 F0W0220

CLIMATE CONTROL

SIDE AIR DIFFUSERS

A fig. 26 - Adjustable and directable side air diffusers:

❒ use device B to adjust the diffuser to the desired position;

❒ turn wheel C to enable/interrupt the air flow.

D - Fixed side air diffuser.

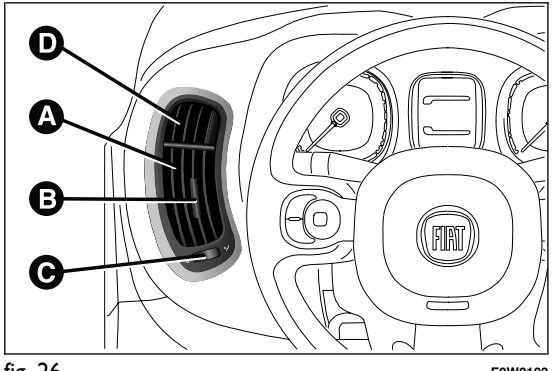

fig. 26 F0W0103

CENTRAL AIR DIFFUSERS

A fig. 27 - Adjustable and directable central air diffusers:

❒ use device B to adjust the diffuser to the desired position;

❒ turn wheel C to enable/interrupt the air flow.

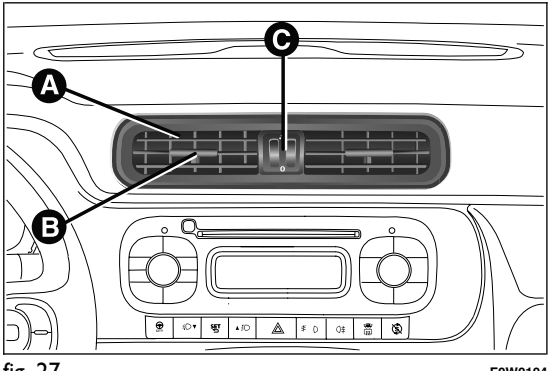

fig. 27 F0W0104

DIFFUSERS

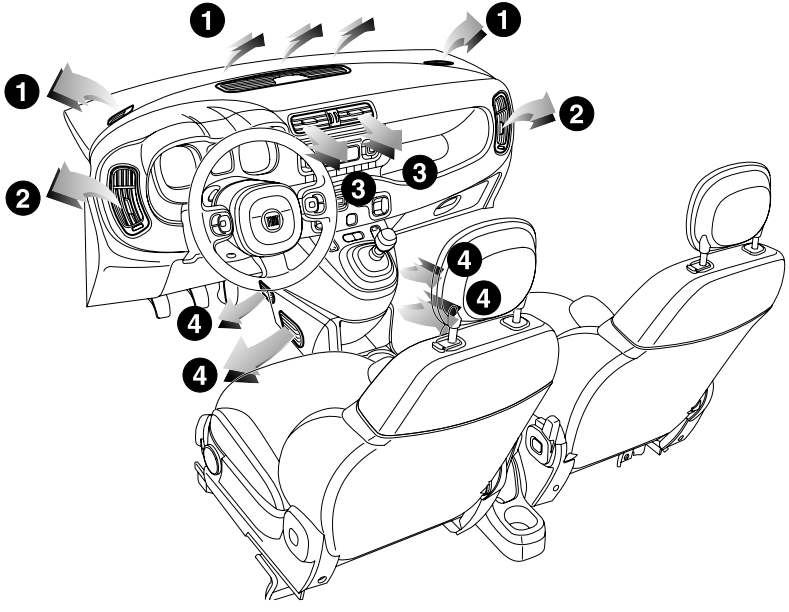

fig. 28

F0W0230

1. Fixed upper diffusers 2. Adjustable and directable and fixed side diffusers for side windows 3. Adjustable and directable centre air diffusers 4. Passenger compartment footwell diffusers

HEATER/MANUAL CLIMATE CONTROL

(for versions/markets, where provided)

CONTROLS

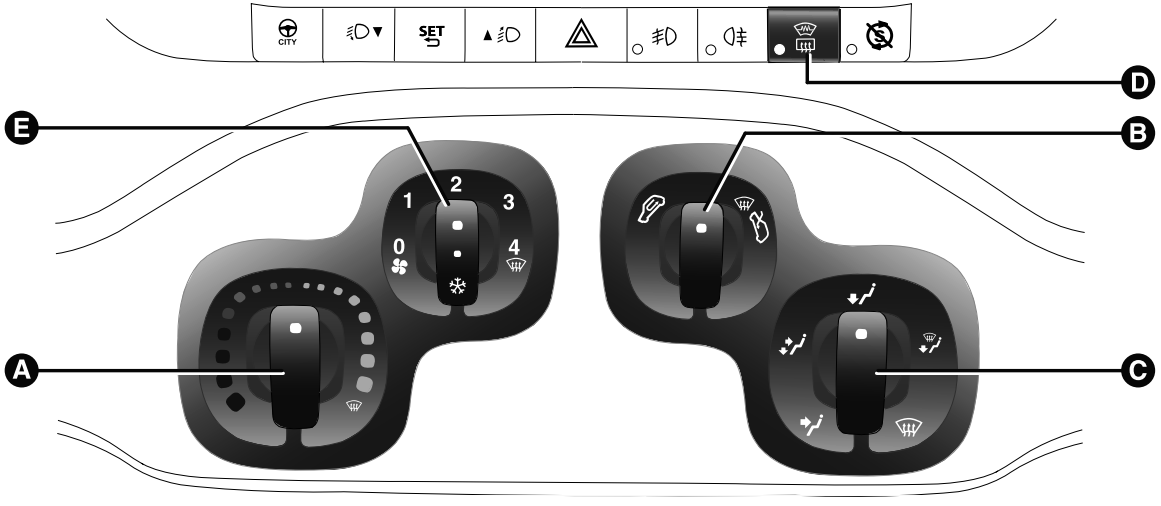

fig. 29

F0W0101

A Air temperature knob (red=hot/blue=cold)fig. 29

B Air recirculation knob fig. 29

internal air recirculation

air intake from outside

IMPORTANT It is advisable to switch the air recirculation on whilst queuing or in tunnels, or whilst driving on dusty roads, to prevent the introduction of polluted air. However, it is better not to use the function for long periods, particularly if there are many people on board, to prevent the windows from misting.

C Air distribution knob fig. 29

towards the body and the side windows

towards the body, the side windows and the feet

toward the feet mainly

towards the feet and the windscreen

towards the windscreen only

D Heated rear window, folding mirror/heated windscreen (for versions/markets, where available) activation/deactivation button fig. 29.

The LED on the button lights up to indicate activation.

In order to maintain battery efficiency, the function is automatically deactivated after about 20 minutes.

E Fan speed and climate control system activation/ deactivation knob fig. 29 (for versions/markets, where provided). Press the knob to activate the climate control system; the LED on the knob switches on. This enables rapid cooling of the passenger compartment. .

Note To stop the air flow from the vents turn the knob to 0.

PASSENGER COMPARTMENT VENTILATION

To ventilate the passenger compartment well, proceed as follows:

❒ turn knob A fig. 29to the blue section;

❒ Turn selector B to external air recirculation ;

❒ turn knob C to ;

❒ turn knob E to the desired speed.

CLIMATE CONTROL (cooling - for versions/markets, where provided)

For fast cooling of the passenger compartment, proceed as follows:

❒ turn knob A fig. 29to the blue section;

❒ turn knob B to internal air recirculation ;

❒ turn knob C to ;

❒ press button E to turn the climate control system on; the LED on the button will switch on;

❒ turn knob E to the desired speed.

Cooling adjustment

❒ turn knob A fig. 29to the right to increase the temperature;

❒ turn knob B to external air recirculation ;

❒ turn knob E to the desired speed;

PASSENGER COMPARTMENT HEATING

For optimal heating of the passenger compartment, proceed as follows:

❒ turn knob A fig. 29to the red section;

❒ turn knob C to the desired symbol;

❒ turn knob E to the desired speed.

FAST PASSENGER COMPARTMENT HEATING

For fast heating of the passenger compartment, proceed as follows:

❒ turn knob A fig. 29to the red section;

❒ Turn the knob to internal air recirculation ;

❒ turn knob C to ;

❒ turn knob E to 4 (max. fan speed).

Then use the controls to maintain the required comfort conditions and turn knob B to the outside air intake symbol .

IMPORTANT With a cold engine, you have to wait for a few minutes to let the system fluid reach optimum operating temperature.

Fast windscreen and front side window demisting/defrosting (MAX-DEF)

Proceed as follows:

❒ turn knob A to the red section;

❒ turn knob B to ;

❒ turn knob C to ;

❒ turn knob E to 4 (maximum fan speed).

IMPORTANT The climate control system is very useful for speeding up demisting since it dehumidifies the air. Adjust the controls as described above and press knob E to switch the climate control system on (the LED on the knob will switch on - for versions/markets, where provided).

Heated rear window demisting/defrosting

Press the button to activate: when this function is activated, the button LED switches on.

For versions/markets where provided, press the button to activate also demisting/defrosting of windscreen (with engine running only) and door mirrors (for versions/markets, where provided).

This function is timed and switches off automatically after 4 minutes for the windscreen and 20 minutes for the rear window and door mirrors. Press the button again to switch the function off in advance.

To activate the heated windscreen again press the button :

❒ twice with LED on the button still on;

❒ once with LED on the button off.

IMPORTANT Do not apply stickers on the inside of the rear window over the heating filaments to avoid damage.

ADDITIONAL HEATER
(for versions/markets, where provided)

This allows the passenger compartment to be heated more quickly in cold weather conditions. The heater switches on automatically according to the environmental conditions and with engine started when the temperature of the engine coolant is low. The additional heater turns off automatically after the required comfort conditions are achieved.

The heater only operates if the outside temperature and engine coolant temperature are low. The heater will not activate if the battery voltage is too low.

SYSTEM MAINTENANCE

In winter, the climate control system must be turned on at least once a month for about 10 minutes. Have the system inspected at a Fiat Dealership before the summer.

AUTOMATIC CLIMATE CONTROL

(for versions/markets, where provided)

CONTROLS

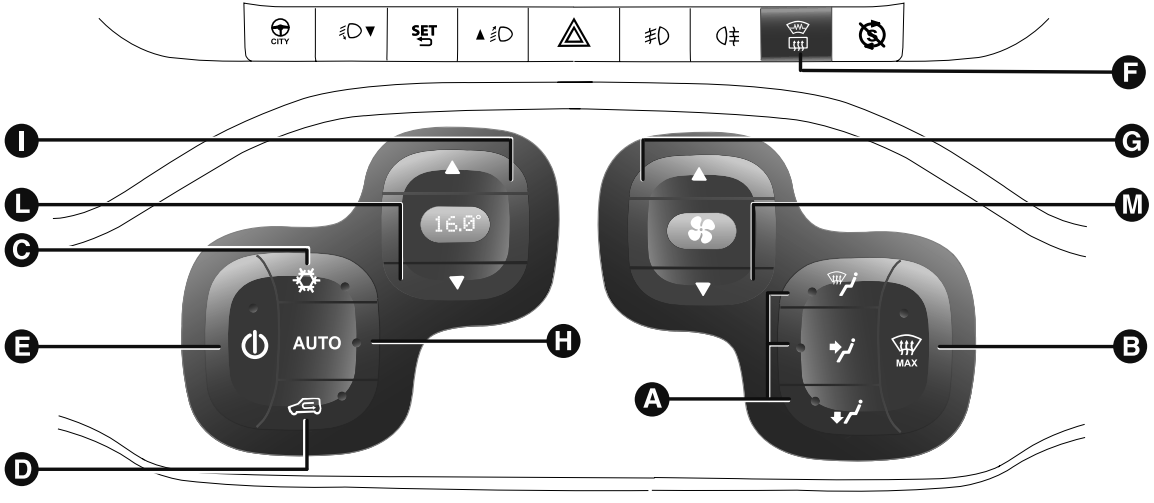

fig. 30

F0W0129

Buttons A - Manual air distribution selection

By pressing the buttons, one of the five possible air flow distribution modes can be selected:

- air flow to the windscreen and front side window diffusers to demist or defrost them.
- air flow to central and side dashboard vents to ventilate the chest and the face during the hot season.
- towards the footwell diffusers. Due to the natural tendency of heat to rise, this type of distribution warms the passenger compartment up as quickly as possible, providing an immediate feeling of warmth.
- + distribution between footwell diffusers (warmest air) and dashboard vents (coolest air).
- + distribution between footwell diffusers and windscreen/front side window vents. This type of distribution achieves effective heating of the passenger compartment and prevents the windows from misting up.

Button B MAX - MAX-DEF function activation

When the MAX button is pressed the system activates all the functions required for fast demisting/defrosting:

❒ compressor on (if the weather conditions are suitable);

❒ air recirculation off;

❒ maximum air temperature setting (HI);

❒ fan speed determined according to the coolant temperature;

❒ air flow conveyed to the windscreen and front side windows;

Button C - Climate control compressor activation/deactivation

Pressing button C activates/deactivates climate control:

❒ LED on button on: compressor on;

❒ LED on button off: compressor off.

When the compressor is off:

❒ the system will deactivate air recirculation to prevent the windows from misting up;

❒ it is not possible to convey air to the passenger compartment with a temperature below the outside temperature (the displayed temperature value will flash when the system cannot guarantee the requested comfort conditions);

❒ the fan speed can be reset manually (with compressor enabled, ventilation cannot go below a bar shown on the display).

Button D - Internal air recirculation activation/deactivation

It is advisable to switch the internal air recirculation on whilst queuing or in tunnels to prevent the introduction of polluted air.

At low temperatures or if the compressor is off, the recirculation is forced to off to prevent misting.

IMPORTANT It is inadvisable to use air recirculation when the outside temperature is low, since the windows could mist rapidly.

Button E ⏻ - Climate control on/off

Pressing the ⏻ button switches the system on/off.

With the system off, the climate control system conditions are as follows:

❒ all LEDs are off;

❒ set temperature display is off;

❒ air recirculation is off;

❒ compressor is off;

❒ fan is off.

Button F - Heated rear window, folding mirror/heated windscreen (for versions/ markets, where available) activation/ deactivation

Pressing the button switches on the LED on the button.

Buttons G/M ▲ / ▼ - Fan speed adjustment

Use buttons G ▲ or M ▼ to increase or decrease the air flow.

Button H (AUTO) - AUTO function activation (automatic climate control operation)

When the AUTO button is pressed and the required temperature is set, the system adjusts the temperature, quantity and distribution of air entering the passenger compartment and controls compressor operation.

Button I - Air temperature increase

When the button is pressed, the passenger compartment air temperature increases.

Button L - Air temperature decrease

When the button is pressed, the passenger compartment air temperature decreases.

DESCRIPTION

The automatically controlled parameters and functions are:

❒ air temperature at the vents;

❒ air distribution at the vents;

❒ fan speed (continuous variation of the air flow);

❒ compressor activation (for cooling/dehumidifying the air);

❒ air recirculation.

All functions may be changed manually. In other words, you may select one or more functions and change the parameters as required. Automatic control of the manually changed functions will be suspended: the system will only override your settings for safety-related reasons (e.g. risk of misting).

Manual selections always have higher priority over automatic settings and are stored until the user switches the system back to automatic control except for cases in which the system intervenes for particular safety-related reasons. You can adjust one function manually without affecting the automatic control of the others.

The amount of air introduced into the passenger compartment is not affected by car speed; it is regulated by the fan, which is controlled electronically.

The temperature of the air supplied is always controlled automatically, depending on the temperature set in the driver's display (except when the system is off or in certain conditions when the compressor is switched off).

The system allows the following to be set or adjusted manually:

❒ air temperature;

❒ fan speed (continuous variation);

❒ air distribution with 5 positions;

❒ compressor enablement;

❒ rapid defrosting/demisting function;

❒ air recirculation;

❒ heated rear window, folding mirror/heated windscreen (for versions/markets, where available);

❒ system deactivation.

SWITCHING ON THE CLIMATE CONTROL SYSTEM

The system can be switched on in various ways; it is however advisable to press the AUTO button and set the desired temperature on the display.

The climate control system allows you to customise the requested temperatures.

The climate control system compressor works only with the engine running and with an outside temperature of above 0°C.

AUTOMATIC CLIMATE CONTROL SYSTEM OPERATION

Press the AUTO button; the system will automatically adjust:

❒ the amount of air introduced into the passenger compartment;

❒ the distribution of the air in the passenger compartment;

cancelling all previous manual adjustments.

The LED on the AUTO button switches on during automatic climate control operation.

During automatic operation it is still possible to adjust the temperatures set and carry out one of the following operations manually:

❒ fan speed adjustment;

❒ air distribution selection;

❒ internal air recirculation activation/deactivation;

❒ climate control compressor activation.

WARNING

It is advisable not to use the air recirculation function when the outside temperature is low to prevent the windows from rapidly misting up.

ADJUSTING THE FAN SPEED

Press the G fig. 30 ▲ or M ▼ button to increase/decrease the fan speed .

The possible speeds are displayed through a progression of individual bars which comprise the symbol:

❒ maximum fan speed = all bars lit

❒ minimum fan speed = half a bar lit.

The fan can be disabled (no bars lit) only if the climate control compressor has been switched off by pressing the button.

To restore automatic fan speed control after a manual adjustment, press the AUTO button.

RAPID FRONT WINDOW DEMISTING/DEFROSTING (MAX-DEF function)

Press the MAX button to automatically activate the timed operation of all the functions required to rapidly demist/defrost the windscreen and front side windows (for versions/markets, where provided).

The functions are:

❒ climate control compressor activation (with an outside temperature of above 0°C);

❒ deactivation, if previously activated, of the internal air recirculation;

❒ activation of heated rear window (LED on button on) and door mirror heater coils (for versions/markets, where provided);

❒ setting maximum air temperature;

❒ activation of air flow.

HEATED WINDSCREEN/HEATED REAR WINDOW AND DOOR MIRROR DEMISTING/DEFROSTING (for versions/markets, where provided)

Press the button to activate: when this function is activated, the LED on the button switches on.

For versions/markets where provided, press the button to activate also demisting/defrosting of windscreen (with engine running only) and door mirrors (for versions/markets, where provided).

This function is timed and switches off automatically after 4 minutes for the windscreen and 20 minutes for the rear window and door mirrors.

Press the button again to switch the function off in advance.

To activate the heated windscreen again press the button :

❒ twice with LED on the button still on;

❒ once with LED on the button off.

When the button is pressed, the heated windscreen activates if it has not been activated already by button .

IMPORTANT Do not apply stickers on the inside of the rear window over the heating filaments to avoid damage.

IMPORTANT To draw in air from the outside, press the button. The LED next to the button switches off.

INTERNAL AIR RECIRCULATION ACTIVATION

Air recirculation is carried out according to two possible operating modes:

❒ forced deactivation (air recirculation always deactivated, air taken from the outside);

❒ forced activation (internal air circulation always activated).

To activate internal air recirculation, press button D .

❒ LED on button on: internal air recirculation on;

❒ LED on button off: internal air recirculation off, air drawn in from outside.

When the button is pressed, the climate control system automatically activates internal air recirculation. External air recirculation can always be activated by pressing the button (LED off) and vice versa.

Automatic recirculation operation is activated by pressing the AUTO button.

IMPORTANT Internal air recirculation makes it possible to reach the required heating or cooling conditions more quickly depending on the mode selected. It is not advisable to switch the air recirculation on when it is rainy/cold to prevent the windows from misting up, especially if the climate control is not turned on. It is advisable to switch the internal air recirculation on whilst queuing or in tunnels, or whilst driving on dusty roads, to prevent the introduction of polluted air. Do not use the function for a long time, particularly if there are several passengers on board, to prevent the windows from misting up.

CLIMATE CONTROL COMPRESSOR ACTIVATION/DEACTIVATION

Press the button to switch on the climate control compressor.

Compressor on: LED on button on.

Compressor off:

❒ LED on button switches off;

❒ internal air recirculation excluded;

With the climate control compressor switched off, air cannot be introduced into the passenger compartment that has a lower temperature than the outside air; in this case the LED on the button will light up.

The deactivation of the climate control compressor is memorised even after the engine has stopped. To reactivate the climate control compressor, press the or AUTO button again: if you press AUTO, the other manual settings will be cancelled.

AIR DISTRIBUTION SELECTION

Press one or more of buttons A fig. 30 to manually select one of the possible air distribution settings for the passenger compartment:

- Air flow to the windscreen and front side window diffusers to demist/defrost them.
- Air flow to the footwell diffusers. This air distribution allows the passenger compartment to be warmed up quickly.
- Air flow distribution to centre/side dashboard diffusers (passenger's body).
- + Air flow distributed between footwell diffusers and windscreen and front side window defrosting/demisting diffusers. This distribution setting allows the passenger compartment to be warmed effectively and prevents the windows from misting.
- + Air flow distribution between footwell diffusers (hotter air) and centre/side dashboard diffusers (cooler air).

IMPORTANT For the climate control system to function, at least one of the buttons A must be operated fig. 30. The system does not allow the deactivation of all the buttons A.

IMPORTANT Push the button to turn the climate control system back on: in this way, all operating conditions memorised before switching off are restored.

To restore automatic control of the air distribution after a manual selection, press the AUTO button.

SWITCHING OFF THE CLIMATE CONTROL SYSTEM

Press the button.

The LEDS next to the symbol and internal air recirculation indication on the control panel switch off.

SYSTEM MAINTENANCE

In winter, the climate control system must be turned on at least once a month for about 10 minutes.

Have the system inspected at a Fiat Dealership before the summer.

The system uses R134a coolant which does not pollute the environment in the event of accidental leakage. Never use R12 fluid, which is not compatible with the system components.

ADDITIONAL HEATER

(for versions/markets, where provided)

This allows the passenger compartment to be heated more quickly in cold weather conditions. The heater switches on automatically according to the environmental conditions and with engine started when the temperature of the engine coolant is low. The additional heater turns off automatically after the required comfort conditions are achieved.

The heater only operates if the outside temperature and engine coolant temperature are low. The heater will not activate if the battery voltage is too low.

Interaction of Automatic Climate Control with START&STOP

(for versions/markets, where provided)

Automatic Climate Control

The automatic climate control manages the Start&Stop function (engine off when the car speed is zero) to guarantee adequate comfort inside the passenger compartment.

In particular, when the weather is extremely hot or cold, the Start&Stop function is deactivated until adequate passenger compartment comfort is ensured. During these transitory stages the engine is not stopped, even if the car speed is zero.

When the Start&Stop function is active (engine off at zero car speed), the climate control system will request the reactivation of the engine if the inside temperature conditions rapidly deteriorate (or if the user requests maximum cooling – LO – or quick demisting – MAX DEF).

With Start&Stop function active (engine off at zero car speed), the air flow rate (if managed automatically) is reduced in order to maintain the passenger compartment comfort conditions for as long as possible.

The climate control system control unit manages the decreased comfort caused by stopping the engine, and consequently the compressor, as far as possible. The operation of the climate control system can in any case be favoured by deactivating the Start&Stop function using the dedicated button on the dashboard.

NOTE In particularly severe climate conditions it is recommended to limit the use of the Start&Stop function to prevent the compressor from continuously switching on and off, with consequent rapid misting of the windows and accumulation of humidity with unpleasant smells in the passenger compartment.

EXTERIOR LIGHTS

The left stalk operates most of the exterior lights.

The ignition key has to be in the MAR position for the exterior lights to come on.

The instrument panel and the various dashboard controls will come on with the exterior lights.

SIDE LIGHTS/DAYTIME RUNNING LIGHTS (DRL)

"Daytime Running Lights"
(for versions/markets, where provided)

With the ignition key turned to MAR and ring nut A fig. 31 turned to position **O** the daytime running lights are automatically activated; the other lights and interior lighting remain off.

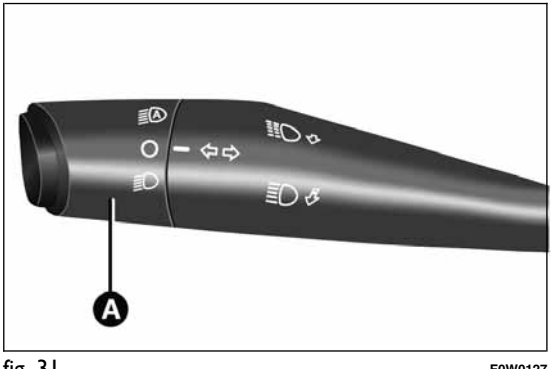

fig. 31 F0W0127

WARNING

The daytime running lights are an alternative to the dipped beam headlights for driving during the daytime in countries where it is compulsory to have lights on during the day, and they are also permitted in those countries where this not obligatory.

WARNING

Daytime running lights cannot replace dipped beam headlights when driving at night or through tunnels. The use of daytime running lights is governed by the highway code of the country in which you are driving. Comply with legal requirements.

SIDE LIGHTS AND DIPPED BEAM HEADLIGHTS

With the ignition key turned to MAR, turn the ring nut A fig. 31 to . If dipped beams are activated, the daytime running lights go out and the side lights and dipped headlights come on. The warning light will come on in the instrument panel.

When the ignition key is turned to STOP or removed and the ring nut is turned from O to , all the side lights and number plate lights switch on. The warning light will come on in the instrument panel.

PARKING LIGHTS

These lights can only be turned on with ignition key in STOP position or removed, by moving the ring nut A first to position **O** and then to position .

The warning light switches on on the instrument panel.

MAIN BEAM HEADLIGHTS

To activate the main beam headlights, with ring nut at , pull the stalk towards the steering wheel. The warning light switches on in the instrument panel.

When the stalk is pulled towards the steering wheel again, the lights deactivate, the dipped headlights reactivate and the warning light switches off.

FLASHING

You can flash the headlights by pulling the stalk towards the wheel (unstable position). The warning light will come on in the instrument panel.

DIRECTION INDICATORS

Bring the stalk to the (stable) position:

upwards: right direction indicator activation;

downwards: left direction indicator activation.

Warning light ⇨ or ⇦ will flash in the instrument panel. The indicators switch off automatically when the steering wheel is straightened.

Lane change function

If you wish to signal a lane change, place the left stalk in the unstable position for less than half a second. The direction indicator on the side selected will flash five times and then switch off automatically.

"FOLLOW ME HOME" DEVICE

This allows the space in front of the car to be lit up for a certain period of time.

Activation: with the ignition key on STOP or removed, pull the stalk towards the steering wheel within 2 minutes from when the engine is turned off.

At each single movement of the stalk, the lights will remain on for an extra 30 seconds up to a maximum of 210 seconds; then the lights are switched off automatically.

Each time the stalk is operated, the warning light on the instrument panel switches on and the display also shows a message and how long the function will remain active.

The warning light switches on when the stalk is first moved and stays on until the function is automatically deactivated. Each time the stalk is activated it increases the time that the lights remain on.

Deactivation: keep the stalk pulled towards the steering wheel for more than two seconds.

WINDOW CLEANING

The right stalk controls windscreen wiper/washer and rear window wiper/washer operation.

WINDSCREEN WASHER/WIPER

It can be operated only with the ignition key turned to MAR-ON.

The ring nut A fig. 32 can be moved to four different positions:

- O windscreen wiper off.
- intermittent operation.
- continuous slow operation.
- continuous fast operation.

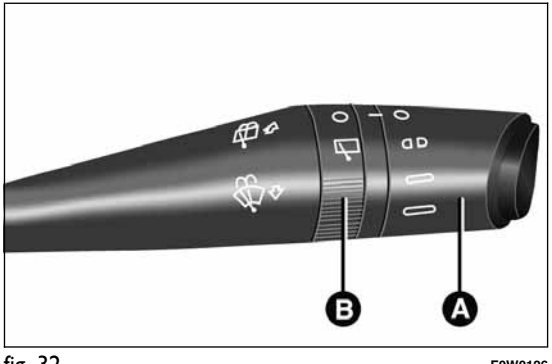

fig. 32 F0W0126

Move the stalk upwards (unstable position) to limit operation to the time for which the stalk is held in this position. When released, the stalk will return to its default position and the wiper will be automatically stopped.

With the ring nut A fig. 32 in position , the windscreen wiper will automatically adapt operating speed to the speed of the car.

With the windscreen wiper operational, if reverse gear is engaged, the rear window wiper is automatically activated.

Never use the windscreen wiper to remove layers of snow or ice from the windscreen. In such conditions, the windscreen wiper may be subjected to excessive stress and the overload cut-out, which prevents operation for a few seconds, may intervene. If operation is not restored (even after turning the key and restarting the car engine), contact a Fiat Dealership.

Do not operate the windscreen wiper with the blades lifted from the windscreen.

"Smart washing" function

Pull the stalk towards the steering wheel (unstable position) to activate the windscreen washer.

Keeping the stalk pulled for more than half a second, with just one movement it is possible to operate the washer jet and the wiper at the same time.

The wiper stops working three strokes after the stalk is released.

A further stroke after approximately six seconds completes the wiping cycle.

REAR WINDOW WASHER/ WIPER

It can be operated only with the ignition key turned to MAR-ON.

Activation

Turn ring nut B fig. 32 from position **O** to position to operate the rear window wiper as follows:

❒ in intermittent mode when the windscreen wiper is not operating;

❒ in synchronous mode (at half the speed of the windscreen wiper) when the windscreen wiper is operating;

❒ in continuous mode with reverse gear engaged and the control active.

With the windscreen wiper on and reverse gear engaged, rear window wiping will be continuous.

Pushing the stalk towards the dashboard (unstable position) the rear window washer jet will activate. Keep the stalk pushed for more than half a second to activate the rear window wiper as well. Releasing the stalk will activate the smart washing function, as described for the windscreen wiper.

The function stops when the stalk is released.

Do not use the rear window wiper to remove layers of snow or ice. In these conditions, the windscreen wiper may be submitted to excessive effort resulting in the motor protection cutting in and wiper operation being inhibited for a few seconds. If operation is not restored, contact a Fiat Dealership.

ROOF LIGHTS

FRONT ROOF LIGHT

Single-bulb roof light

The lens of roof light A fig. 33 has three positions:

❒ right side pressed: light always on

❒ left side pressed: light always off

❒ central position (neutral): the light switches on and off when the doors are opened or closed.

Multi-bulb roof light

(for versions/markets, where provided)

The switch A fig. 34 switches on/off the roof light bulbs.

A switch positions:

❒ central position (position 1): lights C and D switch on/off when the doors are opened/closed;

❒ pressed to the left (position 0): lights C and D are always switched off;

❒ pressed to the right (position 2): lights C and D are always switched on.

The lights switch on/off gradually.

B switch positionsfig. 34:

❒ central position (position 1): lights C and D are always switched off;

❒ pressed to the left (position 0): light C switches on;

❒ pressed to the right (position 2): light D switches on.

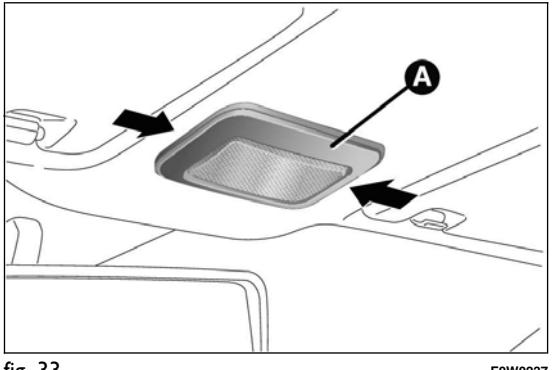

fig. 33 F0W0237

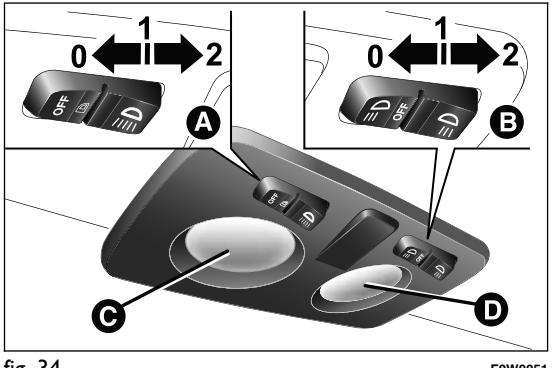

fig. 34 F0W0051

IMPORTANT Before getting out of the car, make sure that both switches are in the central position: when the doors are closed the lights will switch off to avoid draining the battery. In any case, if the switch is left in the on position, the roof light switches off automatically about 15 minutes after the engine has been switched off.

ROOF LIGHT TIMING

On certain versions, to facilitate getting into/out of the car, especially at night or in poorly-lit areas, two timed modes have been provided.

Timing when getting into the car

The roof lights switch on according to the following modes:

❒ for about 10 seconds when the doors are unlocked;

❒ for about 3 minutes when one of the doors is opened;

❒ for about 10 seconds when the doors are closed.

The timing is interrupted when the ignition key is turned to MAR.

Three modes are provided for switching off:

❒ when all doors are closed, the 3-minute timer will stop and a 10-second one will start. This timer will stop when the key is turned to MAR;

❒ when doors are locked (either with remote control or with key on driver side door), the roof light switches off.

❒ the courtesy lights are switched off in any case after 15 minutes to preserve battery charge

Timing when getting out of the car

After removing the key from the ignition switch, the roof lights switch on as follows:

❒ if the ignition key is removed within 3 minutes from the engine stopping, the roof lights switch on for 10 seconds;

❒ for about 3 minutes when one of the doors is opened;

❒ for about 10 seconds when one of the doors is closed.

The timing stops automatically when the doors are locked.

LUGGAGE COMPARTMENT ROOF LIGHT
(for versions/markets, where provided)

The roof light is located on the left side of the luggage compartment. This switches on automatically when the luggage compartment is opened and switches off when it is closed. The light switches on/off regardless of the ignition key position.

CONTROLS

HAZARD WARNING LIGHTS

Press button A fig. 35 to switch the lights on/off. Warning lights ⇦ and ⇨ on the instrument panel switch on and switch A flashes when the lights are on.

IMPORTANT The use of hazard warning lights is governed by the highway code of the country you are driving in: comply with legal requirements.

Emergency braking

In the event of emergency braking the hazard warning lights switch on automatically as well as warning lights ⇦ and ⇨ in the instrument panel. The lights switch off automatically when emergency braking ceases.

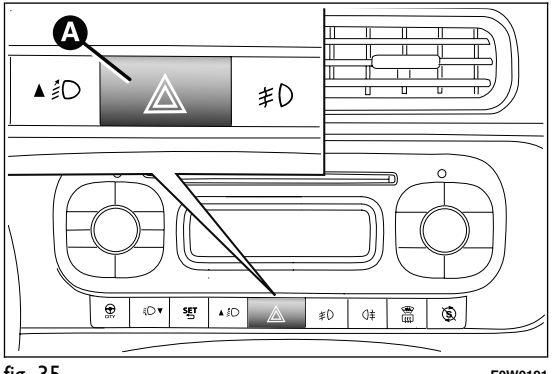

fig. 35 F0W0191

FOG LIGHTS
(for versions/markets, where provided)

Press button fig. 36 to switch the lights on/off. Press the button again to switch the lights off. With lights on, the warning light on the instrument panel will switch on.

REAR FOG LIGHTS

Press the fig. 36 button to switch the lights on/off. The rear fog lights are only switched on with the dipped headlights or front fog lights on. Press the button again to switch the lights off, or switch off the dipped headlights or the front fog lights (for versions/markets, where provided).

With the lights on, warning light in the instrument panel switches on.

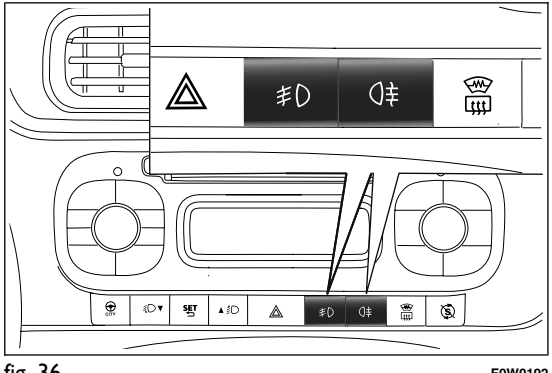

fig. 36 F0W0192

DUALDRIVE ELECTRIC POWER STEERING
(for versions/markets, where provided)

Press the CITY button fig. 37 to activate the function (see paragraph "Dualdrive electric power steering" in this section). When this function is active, the word CITY on the instrument panel will light up. To deactivate the function press the button again.

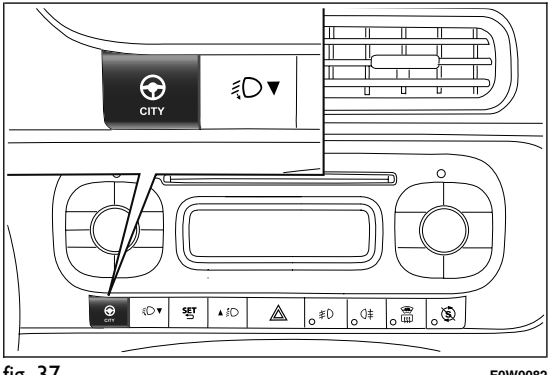

fig. 37 F0W0082

ECO FUNCTION
(for versions/markets, where provided)

Press the ECO button fig. 38 to activate the function.

When the ECO function is active, the car is set for driving characterised by reduced fuel consumption. When the function is active, the corresponding LED on the button switches on.

This function stays in the memory and, when the vehicle is started again, the system keeps the setting it had before the engine was stopped. Press the ECO button again to deactivate the function and restore the normal driving setting.

FUEL CUT-OFF SYSTEM

This intervenes in the case of an impact causing:

❒ the interruption of the fuel supply with the engine consequently cutting out;

❒ the automatic unlocking of the doors;

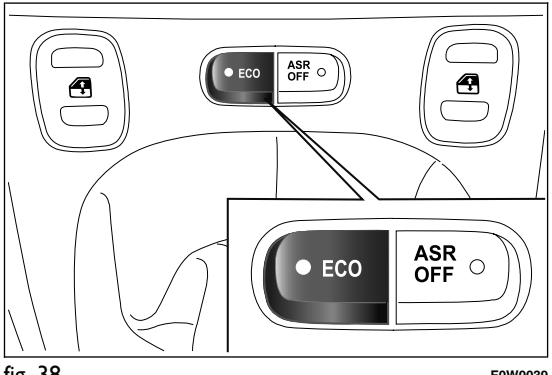

fig. 38 F0W0039

❒ the automatic switching on of the interior lights

❒ the switching on of the hazard warning lights.

On some versions, the intervention of the system is indicated by a message shown on the display.

IMPORTANT Carefully check the car for fuel leaks, for instance in the engine compartment, under the car or near the tank area. After an impact, turn the ignition key to STOP to prevent the battery from running down.

To restore the correct operation of the car, proceed as follows:

❒ turn the ignition key to the MAR position;

❒ activate the right direction indicator;

❒ deactivate the right direction indicator;

❒ activate the left direction indicator;

❒ deactivate the left direction indicator;

❒ activate the right direction indicator;

❒ deactivate the right direction indicator;

❒ activate the left direction indicator;

❒ deactivate the left direction indicator;

❒ turn the ignition key to the STOP position.

WARNING

If, after an impact, you smell fuel or notice leaks from the fuel system, do not reactivate the system to avoid the risk of fire.

INTERIOR FITTINGS

PASSENGER SIDE GLOVE COMPARTMENT

Operate handle A fig. 39 to open the compartment.

WARNING

Never travel with the glove compartment open: it could injure the passenger in the event of a crash.

POWER SOCKET

It is located on the central tunnel fig. 40, near the handbrake lever. It only operates with the ignition key at MAR.

IMPORTANT Do not damage the socket by using unsuitable adaptors.

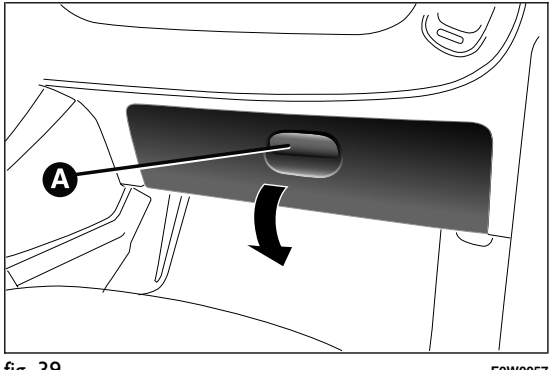

fig. 39 F0W0057

With the "smoker's kit" optional, the cigar lighter is fitted instead of the power socket.

To activate the cigar lighter, press the button with the ignition key at MAR. After about 15 seconds the button reverts automatically to its initial position and the cigar lighter is ready for use.

WARNING

The cigar lighter becomes very hot. Handle it carefully and make sure that children do not touch it: risk of fire and/or burns. Always check that the cigar lighter plug has been released.

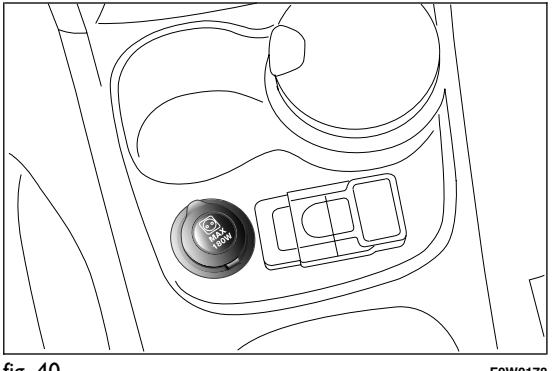

fig. 40 F0W0178

ASHTRAY
(for versions/markets, where provided)

The ashtray is a removable spring-loaded plastic container that must be fitted into the right cup/can holder on the central tunnel fig. 41.

IMPORTANT Do not use the ashtray as a waste paper basket: it may catch fire in contact with cigarette stubs.

IMPORTANT Do not damage the socket by using unsuitable adaptors.

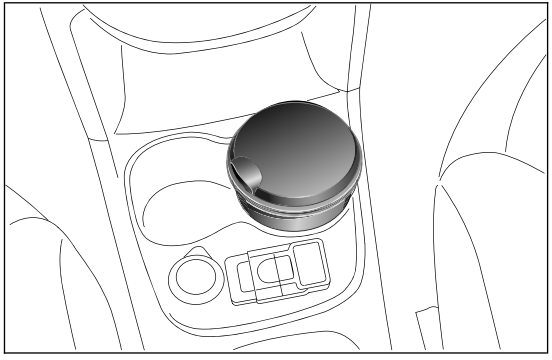

fig. 41 F0W0076

SUN VISORS

These are located at the sides of the rear-view mirror. They can be adjusted forwards and sideways.

when specified, the back of the driver's and passenger side visors houses two courtesy mirrors (for versions/markets, where provided). To use the mirror, open the sliding cover A fig. 42.

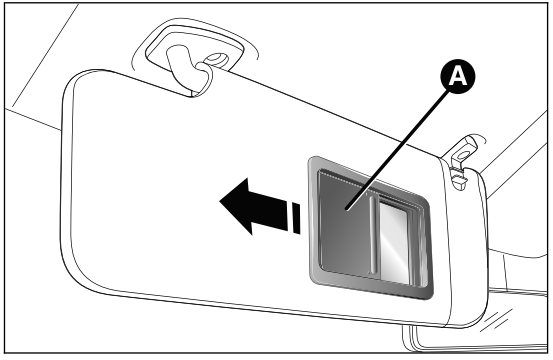

fig. 42 F0W0055

GLASSES HOLDER
(for versions/markets, where provided)

It is located on the left of the driver's side visor fig. 43.

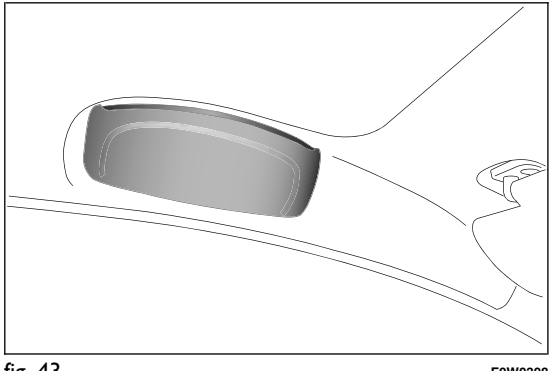

fig. 43 F0W0308

EXTINGUISHER
(for versions/markets, where provided)

It is located under the passenger side front seat or, in some versions, at the right side of the luggage compartment, inside a dedicated container.

SUN ROOF

(for versions/markets, where provided)

The large electric sun roof comprises two glass panels; the front one is mobile and the rear one fixed. These are equipped with two sun blinds (front and rear) that can be moved manually. With the sun roof closed, the blinds can be placed in any position. To open the blinds, grip handle A fig. 44, following the direction indicated by the arrow until the desired position is reached. To close them, carry out the procedure in reverse.

The sun roof can be operated only with the ignition key turned to MAR. The controls B and C fig. 44 on the front roof light trim operate the roof opening/closing functions.

Opening

Press and hold down button C. The front glass panel will move into the spoiler position.

After opening in spoiler position, press button C fig. 44 for more than half a second to bring the roof automatically to fully open position. The automatic roof movement can be stopped in any position by pressing a button (B or C) again.

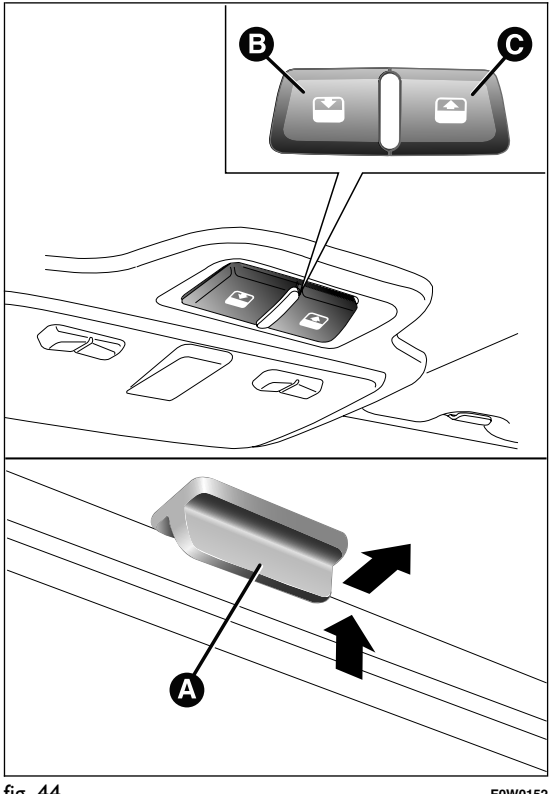

fig. 44 F0W0152

Closure

Press button B from the fully open position fig. 44. If the button is pressed for more than half a second, the roof will automatically move to spoiler position.

From the spoiler position, press button B fig. 44 again to reach the fully closed position.

Do not open the sunroof if there is snow or ice on it: you may damage it. In vehicles with sun roof no roof rack can be fitted.

WARNING

When leaving the car, always remove the key from the ignition to avoid the risk of injury to those still inside the car due to accidental operation of the sunroof. Improper use of the roof may be dangerous. Before and during operation, always check that no-one is exposed to the risk of being injured by the moving sunroof or by objects getting caught or hit by it.

ANTI-PINCH SAFETY DEVICE

For versions/markets where provided, the sun roof has an anti-pinch safety system capable of detecting the presence of an obstacle whilst the roof is closing; if this happens, the system intervenes and the movement of the glass is immediately reversed.

EMERGENCY OPERATION

If the electric device for moving the roof fails, the sun roof can be moved manually proceeding as described below:

❒ for manual activation remove the protective cap A fig. 45 from its housing which is located on the internal covering in front of the sun blind

❒ take the Allen key provided and located in the tool box in the luggage compartment or, depending on the version, inside the glove compartment;

❒ insert the key provided into the housing A fig. 45 and turn it clockwise to open the roof or anticlockwise to close the roof.

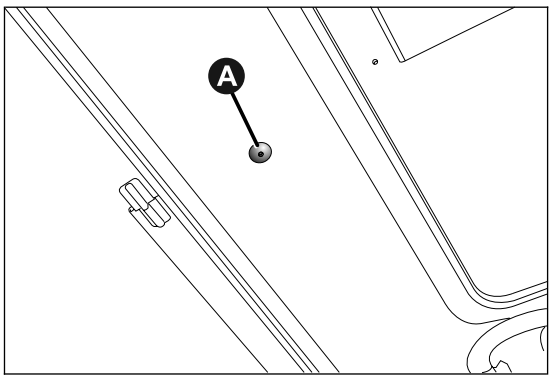

fig. 45 F0W0105

INITIALISATION PROCEDURE

Following an automatic motion malfunction while opening/closing or an emergency manoeuvre (see description in the previous paragraph), the automatic operation of the sun roof must be initialised again.

Proceed as follows:

❒ press button B fig. 44 in closing position;

❒ hold down button B: after approximately 10 seconds the roof moves jerkily to closing position. Once the operation has ended (roof closed) release button B;

❒ turn the ignition key to STOP and keep it there for 10 seconds;

❒ turn the ignition key to the MAR position;

❒ Press button B in closed position;

❒ hold down button B until the roof is completely closed: the initialisation procedure has ended;

❒ press button B again within 3 seconds from the conclusion of the initialisation procedure;

❒ hold down button B: the roof will perform an automatic opening and closing cycle: should this not occur, repeat the operation from the beginning;

❒ keeping button B held down, wait until the roof is completely closed.

DOORS

LOCKING/UNLOCKING FROM OUTSIDE

To unlock

Turn the key fig. 46 to position 1 and pull the handle upwards.

With central door locking (for versions/markets where provided), the doors are unlocked simultaneously when the key is turned.

With remote control (for versions/markets where provided) press the button to open the doors.

IMPORTANT Before opening a door, ensure that you can do it in conditions of safety. Open the doors only when the car is stationary.

IMPORTANT Open the doors only when the car is stationary.

To lock

Turn the key fig. 46 to position 2 with the door perfectly closed.

With central door locking (for versions/markets where provided) all doors must be shut properly.
With remote control (for versions/markets where provided) press the button to close the doors.
If one of the doors is not shut properly, simultaneous locking is disabled.

IMPORTANT If one of the front doors is not fully closed or in the event of system failure, central door locking will not operate and, after 10/11 attempts in quick succession, the system will be excluded for about 30 seconds.

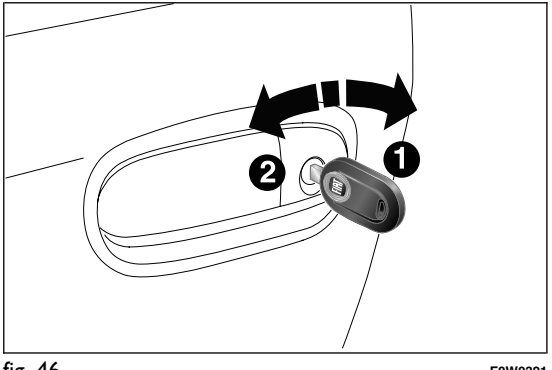

fig. 46 F0W0321

LOCKING/UNLOCKING FROM INSIDE

To unlock

Pull the control lever A fig. 47.

With central door locking system (for versions/ markets, where provided), operating the lever A on the driver's side will unlock all the doors. Lever A on the other doors will only open the corresponding door.

To lock

Push the control lever A fig. 47 towards the door. Operating the lever A on driver's side will lock all doors. With mechanical locks, without central locking, closing takes place by operating the individual control levers.

IMPORTANT On the other doors, the lever will only lock the door concerned.

IMPORTANT The locked door condition is indicated by the red printing B fig. 48.

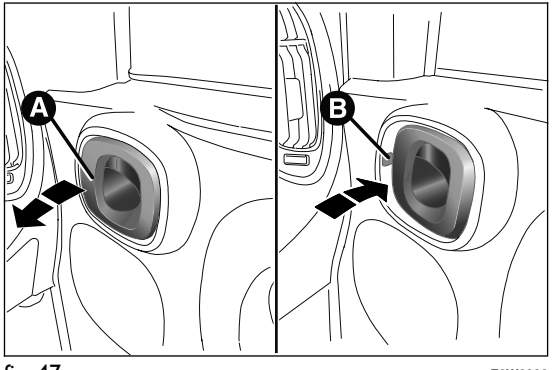

fig. 47 F0W0306

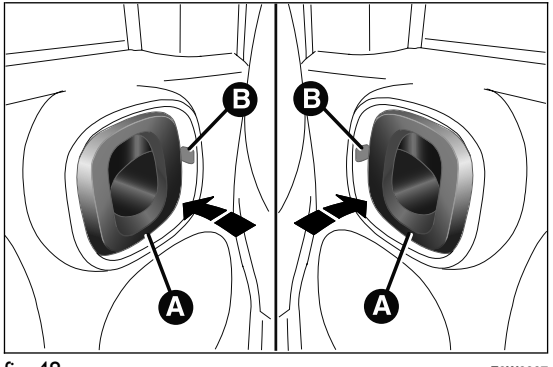

fig. 48 F0W0307

CHILD LOCK DEVICE

This system prevents the rear doors from being opened from the inside.

Device A fig. 49 can only be engaged with the doors open:

❒ position 1 - device engaged (door locked);

❒ position 2 - device not engaged (door may be opened from the inside).

The device remains on even if the doors are unlocked electrically.

IMPORTANT The rear doors cannot be opened from the inside when the child lock device is engaged.

WARNING

Always use this device when carrying children. After engaging the child lock on both rear doors, check for effective engagement by trying to open a door with the internal handle.

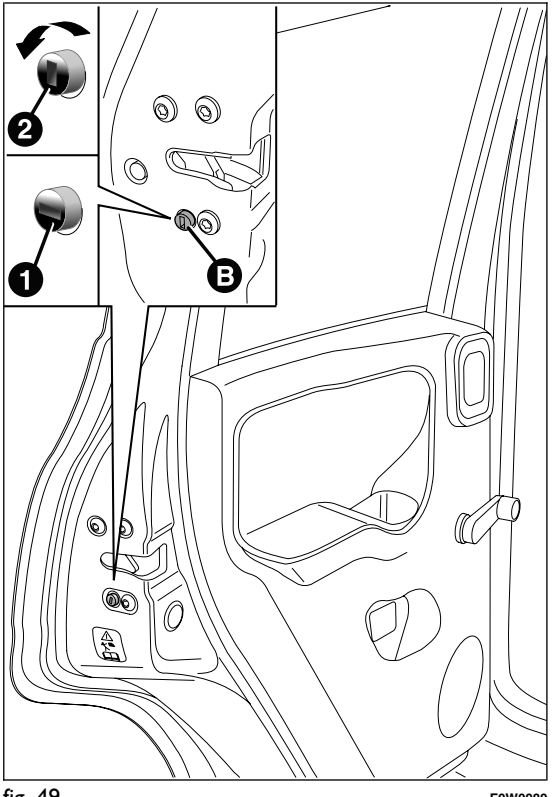

fig. 49 F0W0080

DOOR LIMITER DEVICE

The limiter device for front door A fig. 50 and rear door B fig. 50 keeps the door in any opening or closing position chosen.

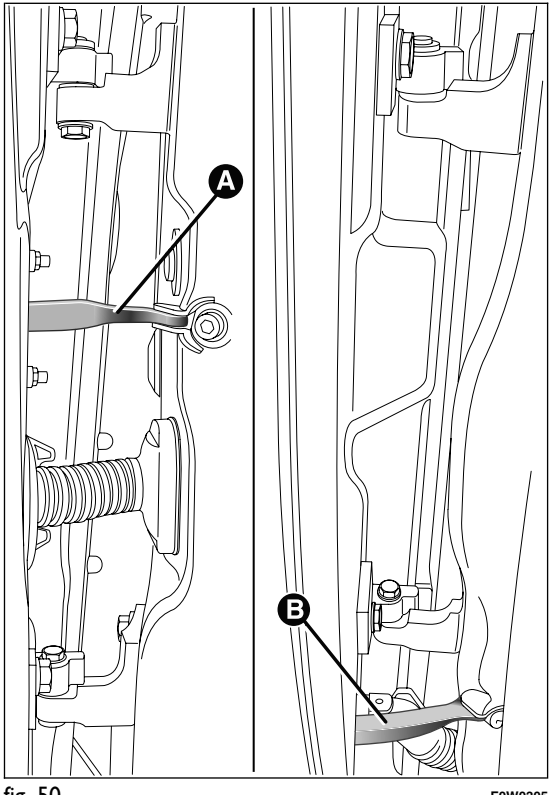

fig. 50 F0W0305

ELECTRIC WINDOWS

FRONT ELECTRIC WINDOWS

These operate when the ignition key is turned to MAR and for about three minutes after turning the key to STOP or removing it.

The electric window control buttons are located beside the gear lever and activate fig. 51:

A Opening/closing of the left window.

B Opening/closing of the right window.

When one of the two buttons is pressed briefly, the window moves. Only with the key at MAR, a long press activates the automatic operation of the window: raising/lowering on the driver's side and lowering only the passenger side.

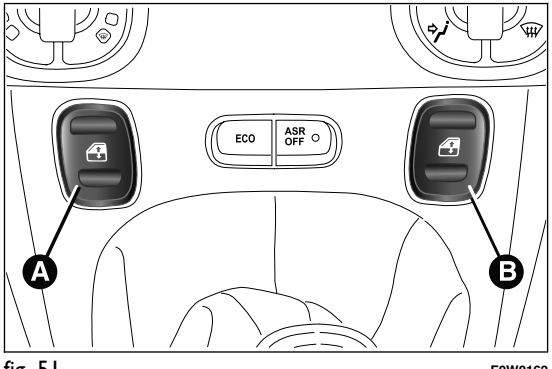

fig. 51 F0W0162

WARNING

Improper use of the electric windows may be dangerous. Before and during operation, always check that no-one is exposed to the risk of being injured either directly by the moving window or through objects getting caught or by being hit.

WARNING

When leaving the car, always remove the ignition key to avoid the risk of injury of people still on board due to accidental operation of the electric windows.

MANUAL REAR WINDOW WINDERS

To open/close the window operate the handle on the door panel.

LUGGAGE COMPARTMENT

The luggage compartment unlocking is electrically operated and is deactivated when the car is in motion.

OPENING

By mechanical key

For versions without remote control, the luggage compartment can be opened from outside the vehicle using a mechanical key in the latch on the tailgate handle.

By remote control

(for versions/markets, where provided)

Press button of remote control to unlock the luggage compartment. The direction indicators will blink twice.

By electrical handle (soft touch)
(for versions/markets, where provided)

For some versions, the tailgate (when unlocked) can only be opened from outside the vehicle using the electrical handle A fig. 52 located under the handle until a click is heard which indicates unlocking.
The tailgate can be opened at any time, if the doors are unlocked. To open it, enable the handle, opening one of the front doors or unlocking the doors with the remote control or using the key without remote control.

When the luggage compartment is opened, the interior light switches on (for versions/markets, where provided): the light switches off automatically when the luggage compartment is closed. The light switches off automatically after a few minutes if the tailgate is left open.

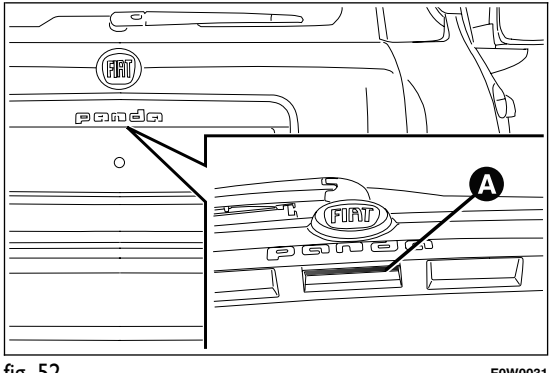

fig. 52 F0W0031

Emergency opening from inside

Proceed as follows:

❒ remove the rear head restraints and completely fold back the seats (see the paragraph "Expanding the luggage compartment");

❒ remove the protective cap and release the lock using a screwdriver or the metal insert fig. 53.

WARNING

Be careful not to hit objects on the storage shelf when you open the luggage compartment tailgate.

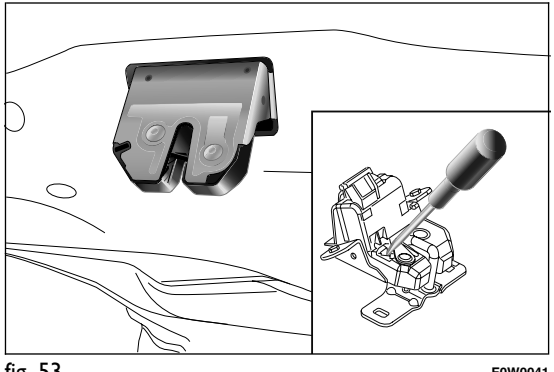
fig. 53 F0W0041

CLOSING

Pull the tab A fig. 54 and lower the tailgate by pressing next to the lock until it clicks.

IMPORTANT Before closing the luggage compartment make sure that you have the keys since the luggage compartment is automatically locked.

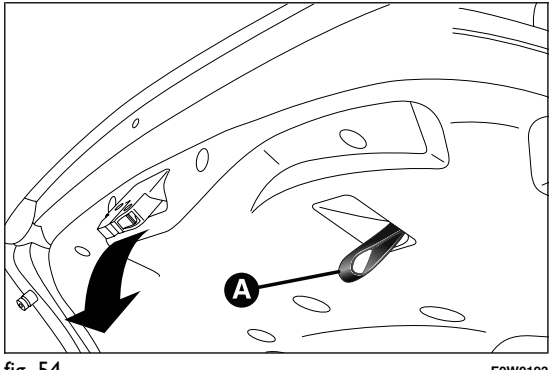

fig. 54 F0W0193

LUGGAGE COMPARTMENT INITIALISATION

IMPORTANT If the battery is disconnected or the protection fuse blows, the luggage compartment opening/closing mechanism must be reinitialised as follows:

❒ close all the doors and the luggage compartment;

❒ Press the 🔒 button on the remote control;

❒ press the 🔓 button on the remote control.

EXTENDING THE LUGGAGE COMPARTMENT

Removing the parcel shelf

Proceed as follows:

❒ free the ends of the two parcel shelf mounting links A fig. 55 by removing the eyelets B from the mounting pins;

❒ free the pins C fig. 56 outside the shelf then remove the parcel shelf D sliding it off outwards;

❒ after removal, the parcel shelf can be loaded sideways into the luggage compartment.

Extending the boot with rear fixed seat

After removing the parcel shelf, proceed as follows:

❒ move the seat belts to the side, making sure that they are correctly extended and not twisted;

❒ if there is a third rear seat (for versions/markets, where provided), release the central belt, winding the buckle into its housing on the roof panel;

❒ operate the levers at the sides of the rear seats fig. 57 pushing them towards the inside of the car, fold the backrest and then bring the backrest onto the cushion.

The car can be fitted with split rear backrest as an optional on some versions. The boot extension possibilities are many and can be chosen according to the number of passengers and the amount of luggage to be carried:

❒ total extension on the right and left sides operating as on the non-split version;

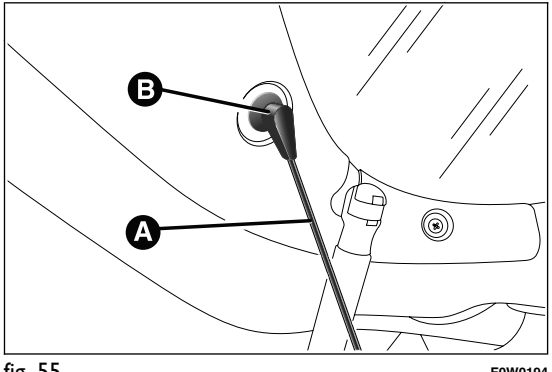

fig. 55 F0W0194

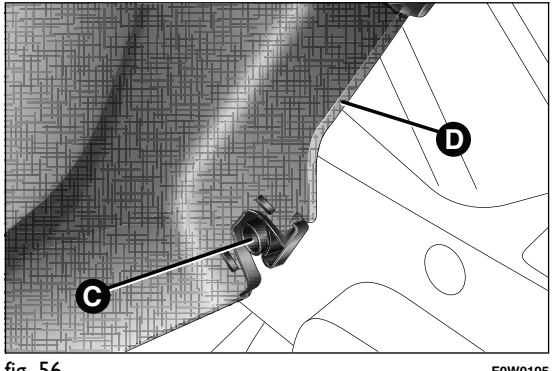

fig. 56 F0W0195

- ❒ partial extension on the right side, with folded backrest, for transporting two passengers on the left side;
- ❒ partial extension on the left side, with folded backrest, for transporting one passengers on the right side.

Repositioning the rear seat: move the seat belts to the side, making sure that they are correctly extended and not twisted. Lift up the backrest folded previously until a click is heard for the engagement mechanism.

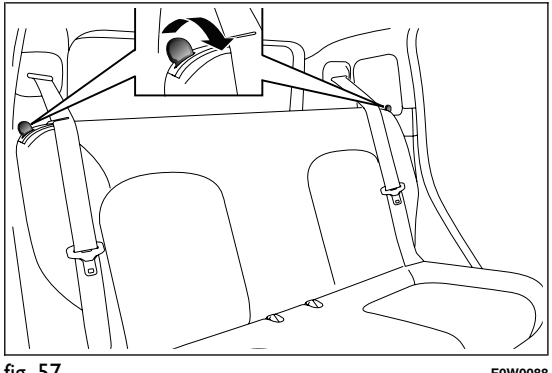

fig. 57 F0W0088

Extending the boot with rear sliding seat

Partial

Use the lever A fig. 58 (in the passenger's compartment) or the central tab D fig. 59 in the luggage compartment to move the seat forward.

Total

Remove the parcel shelf as previously described.

Using the lever A fig. 58 (in the passenger's compartment) or the central tab D fig. 59 in the luggage compartment, move the seat "all forward".

Lift lever B or C fig. 58 or pull side tabs E or F fig. 59 in the luggage compartment to release the seat backrest section to tilt; act on both if you want to tilt the whole backrest.

To bring back the seat in its standard position, lift the backrest and push it backwards until you hear the locking click and make sure the seat belts are at the front of the backrest.

WARNING

Once you have released the adjustment lever, always check that the seat is locked on the guides by trying to move it back and forth. Failure to lock the seat in place could result in the seat moving suddenly.

SECURING YOUR LOAD

The luggage compartment contains two attachments for the cables that secure the load transported and another two attachments are located on the rear crossmember.

WARNING

Every attachment has a maximum load capacity of 100 kg.

WARNING

A heavy load that has not been secured may cause serious injuries in the event of an accident.

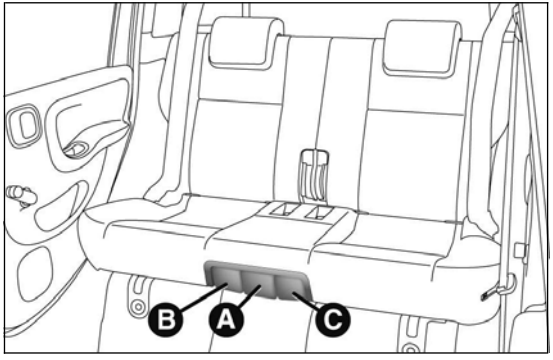

fig. 58 F0W0303

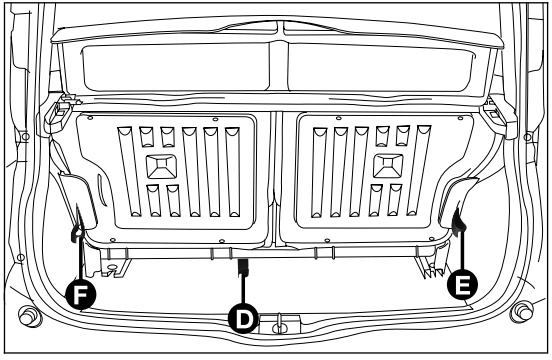

fig. 59 F0W0304

WARNING

If you are travelling in an area with limited opportunities for vehicle refuelling and you wish to bring petrol with you in a petrol can, you must do so in compliance with current regulations and using an approved can, appropriately secured to the load securing attachments. However, by doing so, you increase the risk of fire in case of an accident with your vehicle.

CARGO BOX

(for versions/markets, where provided)

It consists of a preformed box, which is located in the luggage compartment and can be used to store objects.

It expands the load capacity and organises the space in the luggage compartment.

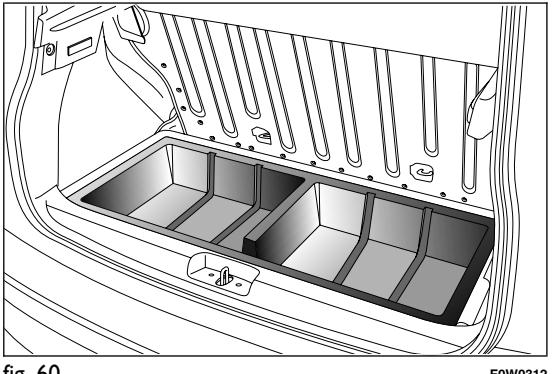

fig. 60 F0W0312

BONNET

OPENING

Proceed as follows:

❒ pull lever A fig. 61 in the direction indicated by the arrow;

❒ move lever B fig. 62 to the left as shown in the figure;

❒ lift the bonnet and, at the same time, release the supporting rod C fig. 63 from its catch D, then insert the end of the rod into housing E in the bonnet (larger hole) and push to safety position (smaller hole), as shown in the figure.

WARNING

The bonnet may drop suddenly if the supporting rod is not positioned correctly.

Use both hands to lift the bonnet. Before lifting, check that the windscreen wiper arms are not raised from the windscreen, that the car is stationary and that the handbrake is engaged.

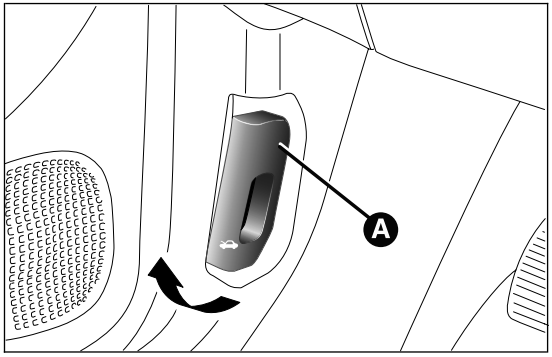

fig. 61 F0W0096

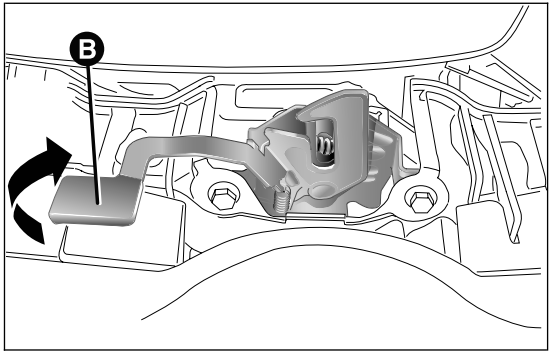

fig. 62 F0W0097

CLOSING

Proceed as follows:

❒ keep the bonnet raised with one hand and remove rod C fig. 63 from housing E with the other, inverting the opening motion, then fit it back into its catch D;

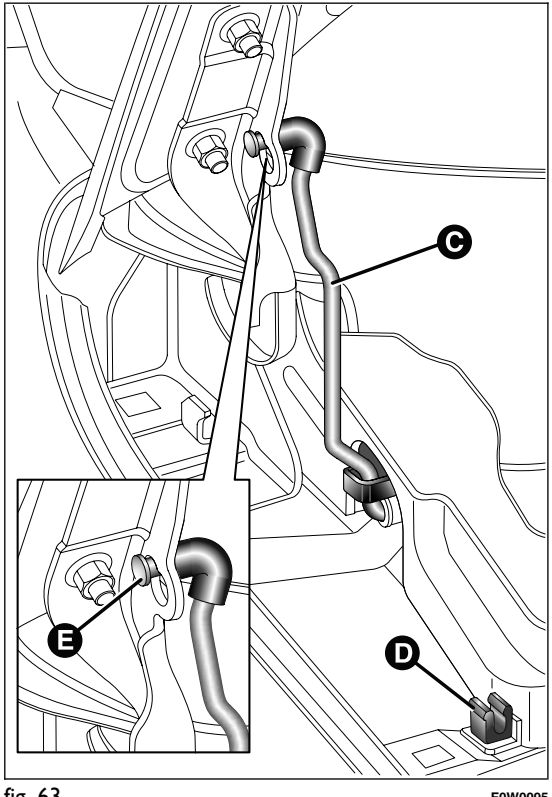

fig. 63 F0W0095

❒ lower the bonnet to approximately 20 centimetres from the engine compartment and let it drop. Make sure that the bonnet is completely closed and not only fastened by the safety catch by trying to open it. If it is not perfectly closed, do not try to press the bonnet lid down but open it and repeat the procedure.

IMPORTANT Always check that the bonnet is closed correctly to avoid it opening while the car is travelling.

WARNING

Perform these operations only when the car is stationary.

The following plate fig. 64 is applied inside the engine compartment:

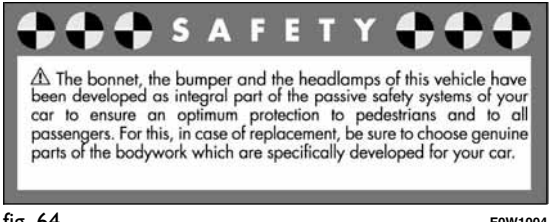

fig. 64 F0W1004

ROOF RACK/SKI RACK

The attachments B fig. 65 are located in the areas illustrated in the figure and can only be accessed with the doors open and after removing the flaps A fig. 65 from the roof. The Lineaccessori Fiat includes a dedicated roof rack/ski rack for this car. Follow the instructions contained in the assembly kit to fit the roof rack/ski rack.

Vehicle with longitudinal roof rack bars

The areas for the attachments are highlighted by reference holes B fig. 65. Holes B are located on the longitudinal roof rack bars, on the side towards the vehicle centre line. Do not fit the roof rack in positions different from those indicated by holes B. The Lineaccessori Fiat includes a dedicated roof rack/ski rack for this car with longitudinal roof rack bars. Follow the instructions contained in the assembly kit to fit the roof rack/ski rack.

Vehicle with sun roof

There is not roof rack for vehicles with sun roof.

WARNING

After travelling for a short distance, check that the fixing screws for the attachments are correctly tightened.

WARNING

Never exceed the maximum permitted loads (see chapter "Technical specifications").

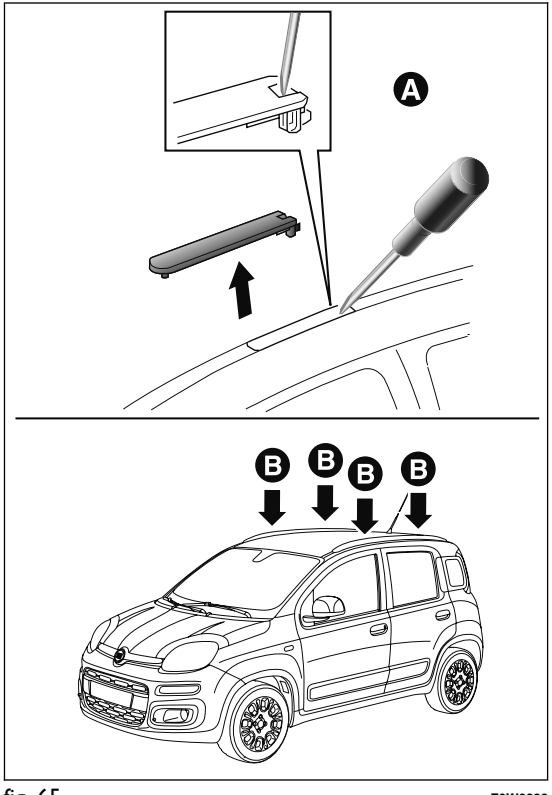

fig. 65 F0W0098

WARNING

Evenly distribute the load and take into account, when driving, the increased responsiveness of the car to side wind.

Fully comply with the regulations in force concerning maximum clearance.

HEADLIGHTS

LIGHT BEAM DIRECTION

The correct alignment of the headlights is important for the comfort and safety of not only the driver but all other road users. This is also covered by a specific rule of the highway code.

The headlights must be correctly aimed to guarantee the best visibility conditions for all drivers while travelling with headlights on.

Contact a Fiat Dealership to have the lights checked and adjusted, if necessary.

Check beam alignment every time the load or its distribution changes.

HEADLIGHT ALIGNMENT CORRECTOR

This device works with the ignition key in the MAR position and the dipped headlights on.

Headlight alignment adjustment

To adjust press buttons ▲ or ▼ fig. 66. The instrument panel display shows the position in relation to the adjustment set.

Position 0 - one or two persons on the front seats

Position 1 - 4/5 persons

Position 2 - 4/5 persons + load in the luggage compartment

Position 3 - driver + maximum permitted load all stowed in the luggage compartment.

IMPORTANT Check alignment every time the load carried changes.

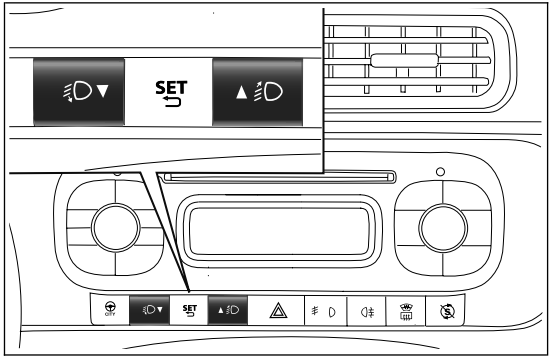

fig. 66 F0W0318

FOG LIGHT ALIGNMENT
(for versions/markets, where provided)

Contact a Fiat Dealership to have the lights checked and adjusted, if necessary.

ADJUSTING THE HEADLIGHTS WHEN ABROAD

Dipped headlights are adjusted to drive in the country where the vehicle was originally purchased. When travelling in countries with opposite driving direction, to avoid dazzling the drivers on the other side of the road, you need to cover areas of the headlight according to the Highway code of the country you are travelling in.

ABS

ABS is an integral part of the braking system which prevents, whatever the road conditions and force applied to the brake pedal, one or more wheels from locking and consequently slipping, thus ensuring that the car remains under control even during emergency braking.

The EBD system (Electronic Braking Force Distribution) completes the system allowing the brake force to be distributed between the front and rear wheels.

IMPORTANT To obtain the maximum efficiency of the braking system, a bedding-in period of about 500 km is needed: during this period it is better to avoid sharp, repeated and prolonged braking.

WARNING

The ABS gets the most from the available grip, but it cannot improve it; you should therefore take every care when driving on slippery surfaces and not take unnecessary risks.

SYSTEM INTERVENTION

The driver can feel that the ABS system has come into action because the brake pedal pulsates slightly and the system gets noisier: it means that the speed should be altered to suit the type of road surface.

WARNING

When the ABS cuts in and you feel the brake pedal pulsating, do not raise your foot, but keep it pressed; in doing so you will stop in the shortest amount of space possible depending on the current road conditions.

WARNING

If the ABS system intervenes, this indicates that the traction of the tyres on the road is nearing its limit. You must slow down to a speed compatible with the available traction.

MSR SYSTEM (Motor Schleppmoment Regelung)

This system is an integral part of the ABS, that intervenes, if there is sudden downshifting, restoring torque to the engine, thereby preventing excessive drive at the drive wheels which, especially in poor grip conditions, could lead to a loss in stability of the car.

MECHANICAL BRAKE ASSIST (emergency braking assistance)

(for versions/markets, where provided)

This system, which cannot be deactivated, recognises emergency braking conditions (according to the brake pedal operation speed) and provides an additional hydraulic braking pressure to support that provided by the driver. This allows faster and more powerful operation of the braking system.

WARNING

When the Mechanical Brake Assist intervenes, noises may be heard from the system. This is normal. In any case, keep the brake pedal firmly depressed while braking.

ESC SYSTEM (Electronic Stability Control)

(for versions/markets, where provided)

This is an electronic system that controls car stability in the event of tyre grip loss, helping maintain directional control. The system is capable of recognising potentially dangerous situations in terms of the stability and intervenes automatically on the brakes in a differentiated manner for the four wheels in order to provide a stabilizing torque.

The ESC system also includes the following subsystems:

❒ Hill Holder

❒ ASR

❒ HBA

❒ ABS

❒ EBD

SYSTEM INTERVENTION

It is signalled by the flashing of the **ESC** warning light on the instrument panel, to inform the driver that the car is in critical stability and grip conditions.

SYSTEM ACTIVATION

The ESC system switches on automatically when the engine is started and cannot be switched off.

HILL HOLDER SYSTEM

This system is an integral part of the ESC system and facilitates starting on slopes.

It is activated automatically in the following instances:

❒ uphill: car stationary on a road with a gradient higher than 5%, engine running, brake pressed and gearbox in neutral or gear (other than reverse) engaged;

❒ downhill: car stationary on a road with a gradient higher than 5%, engine running, brake pressed and reverse gear engaged.

When setting off, the ESC system control unit maintains braking pressure on the wheels until the torque required for starting is reached or, in any case, for a maximum of 2 seconds so that the right foot can be moved easily from the brake pedal to the accelerator pedal.

When 2 seconds have elapsed, without any departure having taken place, the system is automatically deactivated, gradually releasing the braking pressure. During this release stage, a typical mechanical brake release noise can be heard, indicating that the car is about to move.

NOTE The Hill Holder system is not active with engaged parking brake.

IMPORTANT The Hill Holder system is not a parking brake; therefore, never leave the vehicle without having engaged the handbrake, turned the engine off and engaged the first gear, so that the parked vehicle is in safe conditions (further read the paragraph "When parked" in the chapter "Starting and driving").

ASR SYSTEM (AntiSlip Regulation)

It is an integral part of the ESC system. It automatically operates in the event of drive wheels slipping, loss of grip on wet roads (aquaplaning) and acceleration on slippery, snowy or icy roads, etc…

Depending on the slipping conditions, two different control systems are activated:

❒ if the slipping involves both drive wheels, the ASR intervenes reducing the power transmitted by the engine;

❒ if the slipping only involves one of the drive wheels, it intervenes automatically braking the wheel that is slipping.

Activation/deactivation of the ASR system

The ASR system activates automatically each time the engine is started.

Whilst driving, the ASR can be switched off and subsequently switched on again by pressing the ASR OFF button fig. 67.

On some versions, the intervention of the system is indicated by a message shown on the display. When the system is not active, the LED on the button ASR OFF turns on and, on some versions, a message appears on the display.

When the ASR is deactivated whilst driving, the next time the car is started the ASR is automatically activated.

When travelling on snowy roads with snow chains, it may be helpful to turn the ASR off: in fact, in these conditions, slipping of the drive wheels when moving off makes it possible to obtain better traction.

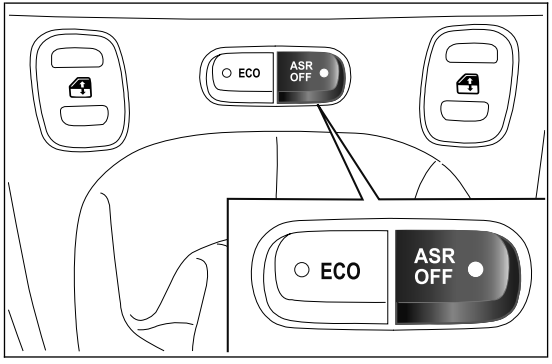

fig. 67 F0W0040

WARNING

For the correct operation of the ESC and ASR systems it is vital that the tyres are the same make and the same type on all the wheels, in perfect condition and, above all, the recommended type, make and size.

WARNING

The ESC functions even when the space-saver wheel is being used. Always remember that the space-saver wheel, being smaller than the original wheel, provides less grip.

WARNING

Do not take unnecessary risks, even if your vehicle is fitted with the ESC and ASR systems. Your driving style must always be suited to the road conditions, visibility and traffic. The driver is always responsible for road safety.

HBA SYSTEM

The system, which cannot be turned off, recognises emergency braking (on the basis of the brake pedal operating speed) and speeding up the response of the braking system. The HBA is deactivated if there is an ESC system failure.

TRACTION PLUS SYSTEM

(for versions/markets, where provided)

Traction Plus is a driving aid, useful for setting off in poor grip conditions (snow, ice, mud, etc.) which allows the drive force to be distributed in the best way over the front axle when one wheel is slipping.

In effect, Traction Plus acts by braking the wheels with poor grip (or those slipping more than the others), thereby transferring the drive force to those which have more grip on the ground.

This function can be activated manually by pressing the button T+ close to the gear lever fig. 68 and operates under 30 km/h. When this speed is exceeded, it is automatically deactivated (the LED on the button is still on) and it is reactivated again when the speed is below 30 km/h.

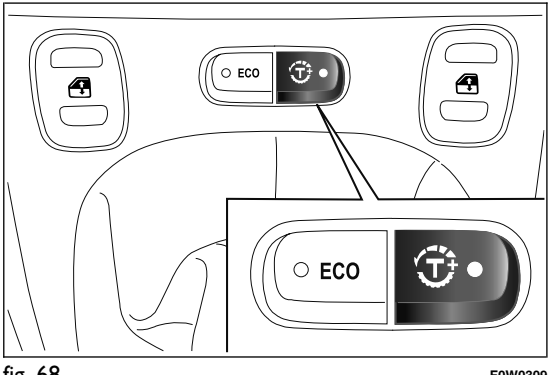

fig. 68 F0W0309

Traction Plus operation

The system is deactivated when starting. To activate the Traction Plus system, press the T+ button fig. 68: the LED on the button switches on; the display shows a dedicated message.

The activation of the Traction Plus system causes the differential locking effect on the front axle, through the braking system, to improve traction on irregular grounds.

If the Traction Plus system is faulty, the **ESC** warning light on the instrument panel switches on constantly.

START&STOP SYSTEM

(for versions/markets, where provided)

INTRODUCTION

The Start&Stop system automatically stops the engine when the car is stationary and starts it again when the driver wants to move off. This reduces consumption, the emission of harmful gases and noise pollution.

OPERATING MODES

Engine stopping mode

With the car stopped, the engine stops with gearbox in neutral and clutch pedal released.

Restarting the engine

Press the clutch pedal to restart the engine.

Note The engine can only be stopped automatically after driving at a speed of more than about 10 km/h, to prevent the engine from being repeatedly stopped when driving at walking pace.

The symbol Ⓢ appears on the display when the engine stops.

MANUAL SYSTEM ACTIVATION/ DEACTIVATION

To activate/deactivate the system manually, press the fig. 69 button on the dashboard control trim.

Start&Stop system activation

When the Start&Stop system is activated, the LED above button is off.

Start&Stop system deactivation

When the Start&Stop system is deactivated, the LED above the button is on.

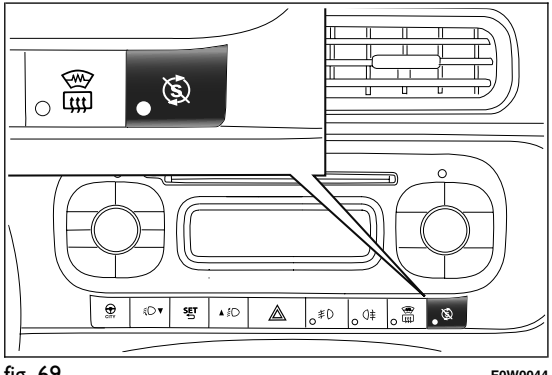

fig. 69 F0W0044

ENGINE STOPPING FAILURE CONDITIONS

When the system is operating, due to comfort, emission control and safety reasons, the engine does not stop in some conditions, among which:

- ❒ engine still cold;
- ❒ especially cold outside temperature;
- ❒ battery not sufficiently charged;
- ❒ particulate filter regeneration (DPF) in progress (diesel engines only);
- ❒ driver's door not shut;
- ❒ driver's seat belt not fastened;
- ❒ reverse gear engaged (for example, for parking manoeuvres);
- ❒ for versions equipped with automatic climate control (for versions/markets, where provided), if an adequate level of thermal comfort has not been reached or with MAX-DEF activation;
- ❒ during the first period of use for a new car, to initialise the system.

If climate comfort is to be favoured, the Start&Stop system can be disabled, for continuous operation of the climate control system and avoidance of, for example, the windows misting up.

ENGINE RESTARTING CONDITIONS

For reasons of comfort, limiting harmful emissions and safety purposes, the power unit can restart automatically without any action on behalf of the driver if certain conditions are met, including:

- ❒ battery not sufficiently charged;
- ❒ reduced braking system vacuum (e.g. if the brake pedal is pressed repeatedly);
- ❒ car moving (e.g. when driving on roads with a gradient);
- ❒ engine stopping by Start&Stop system for over 3 minutes;
- ❒ for versions equipped with automatic climate control (for versions/markets where provided), to enable suitable thermal comfort or with MAX-DEF activation.

If a gear in engaged during stopping with Start&Stop, the automatic restarting of the engine is only permitted by fully depressing the clutch pedal.

The driver is informed by a message on the display and - for versions/markets, where provided - by the flashing of the Ⓢ symbol.

If the clutch is not pressed, about 3 minutes after the engine stops, the engine can be restarted only using the ignition key.

In cases of undesired engine stops, due for example to the clutch pedal being released abruptly with a gear engaged, if the Start&Stop system is activated, the engine can be restarted by fully depressing the clutch pedal.

SAFETY FUNCTIONS

When the engine is stopped by the Start&Stop system, if the driver releases his/her seat belt and opens the driver's or passenger's door, the engine can be restarted only using the ignition key.

The driver is informed by a buzzer and by the flashing of the symbol Ⓢ on the display; on some versions, a message is displayed as well.

"ENERGY SAVING" FUNCTION

(for versions/markets, where provided)

If, after automatic engine restarting, the driver does not carry out any action on the car for an extended period (about 3 minutes), the Start&Stop system stops the engine definitively, to prevent fuel consumption. In these cases, the engine can only be restarted using the ignition key.

Note In any case, it is possible to keep the engine running by deactivating the Start&Stop system.

IRREGULAR OPERATION

In the event of malfunction, the Start&Stop system is deactivated. The driver is informed about the fault through the flashing of the Ⓢ symbol on the display (for some versions together with the display of a message). In this case, contact a Fiat Dealership.

CAR INACTIVITY

In the event of car inactivity, special attention must be paid to the disconnection of the battery power supply.

Proceed as follows: detach the connector A fig. 70 (by pressing button B) from sensor C for monitoring the status of the battery installed on the negative battery pole D. This sensor should never be disconnected from the pole except if the battery is replaced.

WARNING

When replacing the battery, always go to a Fiat Dealership. Replace the battery with one of the same type (HEAVY DUTY) and with the same specifications.

IMPORTANT After turning the ignition key to STOP, wait at least 1 minute before disconnecting the electrical supply to the battery.

JUMP STARTING

When jump starting, never connect the negative lead (-) of the auxiliary battery to the negative pole A fig. 71 of the car battery, but rather to an engine/gearbox earth point.

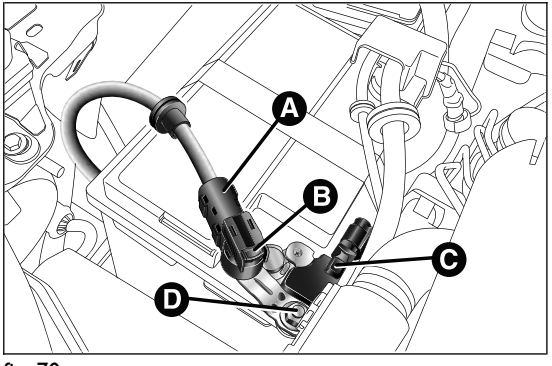

fig. 70 F0W0083

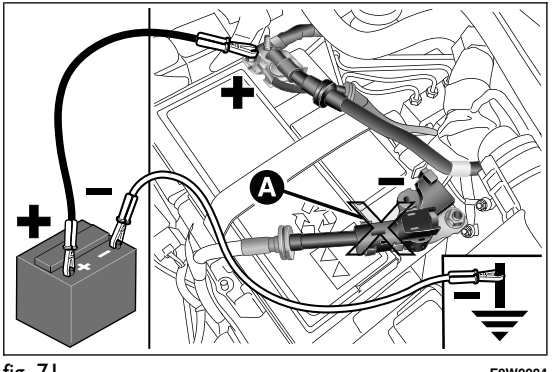

fig. 71 F0W0084

IMPORTANT

WARNING

Before opening the bonnet, make sure that the engine is off and that the ignition key is in the STOP position. Follow the instructions on the dedicated label on the front crossmember fig. 72. We recommend that you remove the key from the ignition if other people remain in the vehicle. Exit from the car only after having removed the ignition key or having rotated it to the STOP position. During refuelling, make sure that the engine is off and that the ignition key is in the STOP position.

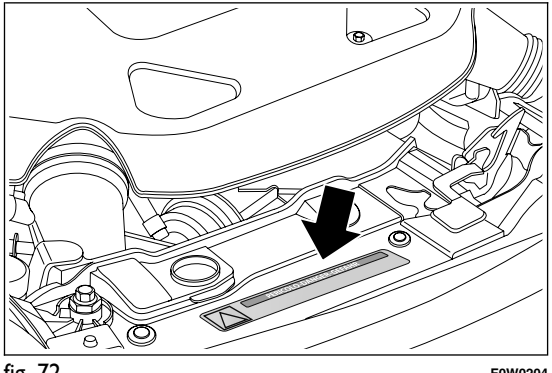

fig. 72 F0W0204

CITY BRAKE CONTROL - "Collision Mitigation" SYSTEM

(for versions/markets, where provided)

This is a driving assistance system that can detect the presence of nearby cars in front of the vehicle and, in case of imminent collision, intervenes automatically, braking the car to prevent the impact or mitigate its effects.

The system only works if:

❒ **the ignition key is in MAR-ON,**

❒ **the car speed is between 5 and 30 km/h;**

❒ **the front seat belts are fastened.**

The system can be deactivated (and then reactivated) with the display setup menu (see paragraph “Menu items” in this chapter).

The system activates if there is risk of imminent collision and the driver does not press the brake pedal promptly.

Versions equipped with Start&Stop system: at the end of the automatic braking, the Start&Stop system will activate as described in paragraph "Start&Stop system" of this chapter.

Versions equipped with manual gearbox: at the end of the automatic braking the engine may stall and turn off, unless the driver presses the clutch pedal.

Versions equipped with Dualogic automatic transmission (for versions/markets, where provided): at the end of braking the last gear stored remains engaged.

IMPORTANT Both on versions equipped with manual gearbox and on those with Dualogic automatic transmission (for versions/markets, where provided), after the car is stopped the brake calipers may be stuck for about 2 seconds for safety reasons. Make sure you press the brake pedal if the car moves slightly forwards.

IMPORTANT The system does **NOT** activate engaging the reverse. The system does **NOT** activate if the front seat belts are not fastened.

LASER SENSOR

The system includes a laser sensor, located in the upper part of the windscreen . fig. 73

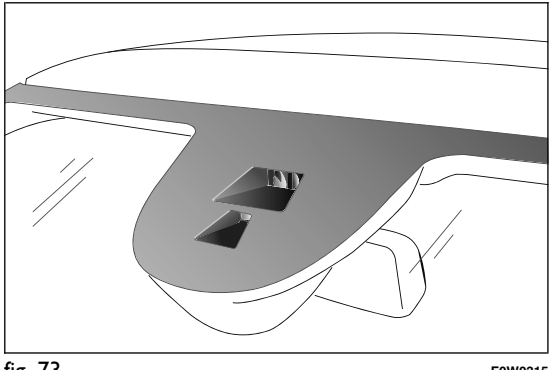

fig. 73 F0W0315

IMPORTANT

WARNING

The system is an aid for the driver who must never reduce attention while driving. The responsibility always rests with the driver, who must take into account the traffic conditions for driving in complete safety. The driver must always maintain a safe distance from the vehicle in front.

WARNING

If the driver depresses the brake pedal fully or carries out a fast steering during system operation, the automatic braking function may stop (e.g. to allow a possible manoeuvre to avoid the obstacle).

The laser sensor may have limited or absent operation due to weather conditions such as: heavy rain, hail, thick fog, heavy snow, formation of ice layers on the windscreen.

Sensor operation may also be compromised by the presence of dust, condensation, dirt or ice on the windscreen, by traffic conditions (e.g. vehicles that are driving not aligned with you car, vehicle driving in a transverse or opposite way on the same lane, bend with a small radius of curvature), by road surface conditions and by driving conditions (e.g. off-road driving). Make sure the windscreen is always clean. Use specific detergents and clean cloths to avoid scratching the windscreen. The sensor operation may also be limited or absent in some driving, traffic and road surface conditions.

Projecting loads on the roof of the car may interfere with the correct operation of the sensor. Before starting make sure the load is correctly positioned, in order not to cover the sensor operating range.

If the windscreen must be replaced due to scratches, chipping or breakage, contact exclusively a Fiat Dealership. Do not replace the windscreen on your own, risk of malfunction! It is advisable to replace the windscreen if it is damaged in the laser sensor area.

Do not tamper nor operate on the laser sensor. Do not close the openings in the aesthetic cover located under the interior rear view mirror. In the event of a sensor failure, contact a Fiat Dealership.

IMPORTANT If you are driving on roads close to trees with protruding branches it is advisable to deactivate the system to prevent the branches at the height of the bonnet or the windscreen from interfering with the system.

Do not cover the operating range of the sensor with stickers or other objects. Also pay attention to other objects on the bonnet (e.g. a layer of snow) and make sure they do not interfere with the light emitted by the laser.

WARNING

The laser beam is not visible at the naked eye. Do not look directly, or with optical instruments (e.g. lenses), at the laser beam from a distance lower than 10 cm: this may cause damage to the sight. The laser beam is also present when the key is at MAR-ON but its operation is off, not available or manually deactivated with the display Setup Menu (see paragraph "Menu items" in this chapter).

WARNING

The system intervenes on vehicles travelling in the same lane. Small sized vehicles (e.g. bicycles or motorbikes) or people, animals and things (e.g. pushchairs) and more in general all those obstacles with a low reflection of the light emitted by the laser (e.g. vehicles soiled with mud) are not taken into consideration.

If a trailer or a car is towed the system must be deactivated with the display Setup Menu (see paragraph "Menu items" in this chapter).

WARNING

If the car must be placed on a roller bench (at a speed within 5 and 30 km/h) for maintenance interventions or if it is washed in an automatic roller washing tunnel with an obstacle in the front part (e.g. another car, a wall or another obstacle), the system may detect its presence and activate. In this case the system must be deactivated with the display setup menu (see paragraph “Menu items” in this chapter).

EOBD SYSTEM

The EOBD system (European On Board Diagnosis) carries out a continuous diagnosis of the components of the car related to emissions. It also alerts the driver about component deterioration by switching on the warning light on the instrument panel and the displaying of a relevant message (for versions/markets, where provided) (see the chapter "Warning lights and messages").

The aim of the EOBD system (European On Board Diagnosis) is to:

❒ monitor the system efficiency;

❒ indicate an increase in emissions;

❒ indicate the need to replace damaged components.

The system also has a diagnosis connector that can be interfaced to suitable instruments, to read the error codes stored in the control unit together with a series of specific parameters for engine operation and diagnosis.

IMPORTANT After eliminating the failure, to check the system completely, Fiat Dealerships run a bench test and, if necessary, road tests which may also call for a long journey.

PARKING SENSORS

(for versions/markets, where provided)

Parking sensors are located in the rear bumper fig. 74 and their function is to inform the driver, through an intermittent buzzer, about the presence of obstacles behind the car.

ACTIVATION

The sensors are automatically activated when reverse gear is engaged. As the obstacle behind the vehicle gets closer to the car, the acoustic signal becomes more frequent.

ACOUSTIC SIGNAL

When reverse gear is engaged and there is an obstacle behind the car an acoustic signal is activated which varies according to the distance of the obstacle from the bumper.

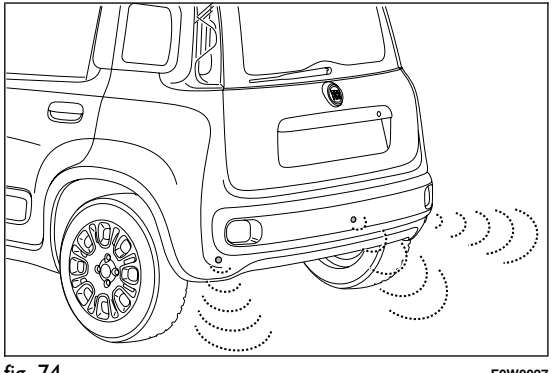

fig. 74 F0W0027

The acoustic signal frequency:

- ❒ increases as the distance between the car and the obstacle decreases
- ❒ becomes continuous when the distance between the car and the obstacle is less than 30 cm and stops immediately if the distance increases
- ❒ is constant if the distance between car and obstacle is unchanged.

Detection distances

If several obstacles are detected by the sensors, only the nearest one is considered.

FAULT INDICATIONS

Any parking sensor failures will be indicated when engaging reverse by the warning light ⚠ in the instrument panel together with the message in the display (for versions/markets where provided) (see “Warning lights and messages” section).

OPERATION WITH TRAILER

Sensor operation is deactivated automatically when the trailer's electric cable plug is fitted into the car's tow hook socket. The sensors are automatically reactivated when the trailer's cable plug is removed.

For correct operation, sensors must always be clean from mud, dirt, snow or ice. Be careful not to scratch or damage the sensors while cleaning them. Avoid using dry, rough or hard cloths. The sensors should be washed using clean water with the addition of car shampoo if necessary. When using special washing equipment such as high pressure jets or steam cleaning, clean the sensors very quickly keeping the jet more than 10 cm away.

GENERAL WARNINGS

❒ When parking, take the utmost care over obstacles that may be above or under the sensors.

❒ Objects close to the car, are not detected under certain circumstances and could therefore cause damage to the car or be damaged.

Some of the conditions that could affect the performance of the parking system are described below:

❒ Reduced sensor sensitivity and a reduction in the parking assistance system performance could be due to the presence on the surface of the sensor of: ice, snow, mud, thick paint

❒ The sensor may detect a non-existent obstacle (echo interference) due to mechanical interference, for example when washing the vehicle, in rain, (strong wind), hail.

❒ The signals sent by the sensors can also be altered by the presence of ultrasonic systems (e.g. pneumatic brake systems or pneumatic drills) near the vehicle.

❒ Parking assistance system performance can also be influenced by the position of the sensors, for example due to a change in the ride setting (caused by wear to the shock absorbers, suspension), or by changing tyres, overloading the car or carrying out specific tuning operations that require the car to be lowered.

❒ The presence of a tow hook without trailer interferes with the correct operation of the parking sensors. If a fixed tow hook is installed, the sensors cannot be used. If the customer installs a removable tow hook, this must always be disconnected from the crossmember whenever the trailer is not attached to prevent the activation of the sensors.

WARNING

The responsibility for parking and other dangerous manoeuvres always and in every case lies with the driver. When making these manoeuvres, always make sure that no people (especially children) or animals are present in your manoeuvering space. The parking sensors serve to assist the driver, but must never allow his attention to lapse during potentially dangerous manoeuvres, even those executed at low speeds.

DUALDRIVE ELECTRIC POWER STEERING

This only operates with the key turned to MAR and the engine started. The steering allows the force required at the steering wheel to be adjusted to suit driving conditions.

IMPORTANT When turning the ignition key quickly, full power steering functionality can be achieved after a few seconds.

CITY FUNCTION ACTIVATION/ DEACTIVATION

Press button CITY fig. 75 to activate/deactivate the function. The activation of the function is signalled by the word CITY on the display (in some versions it is signalled by the word CITY appearing on the instrument panel).

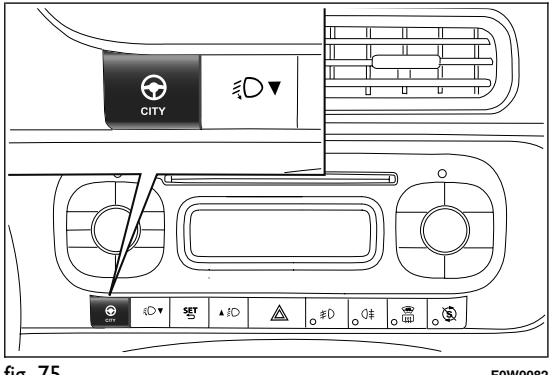

fig. 75 F0W0082

When the CITY function is on, the steering wheel effort is lighter and parking operations are easier: therefore this function is particularly useful for driving in city centres.

WARNING

It is absolutely forbidden to carry out any after-market operation involving steering system or steering column modifications (e.g.: installation of anti-theft device) that could badly affect performance and safety, invalidate warranty and also result in non-compliance of the car with type approval requirements.

IMPORTANT During parking manoeuvres requiring a lot of steering, the steering may become harder; this is normal and is due to the intervention of the system to protect the electric steering motor from overheating, so no intervention is required. When the car is used again later on, the power steering will work normally.

WARNING

Before starting any servicing operation, stop the engine and remove the key from the ignition switch to operate the steering lock, particularly when the wheels do not touch the ground. If this is not possible (for example if the key needs to be turned to MAR or the engine must be running), remove the main fuse that protects the electric power steering.

WIRING FOR RADIO SYSTEM

(for versions/markets, where provided)

If no car radio was requested at the time of purchase, the car is provided with a compartment on the dashboard fig. 76.

STANDARD EQUIPMENT

The system consists of:

❒ radio supply leads;

❒ radio housing;

Remove door panels to install the speakers. Have this operation carried out at a Fiat Dealership.

The car radio must be fitted in the special compartment A fig. 76, which can be accessed by pressing the two retaining tabs B in the compartment itself; power supply cables are located in this area.

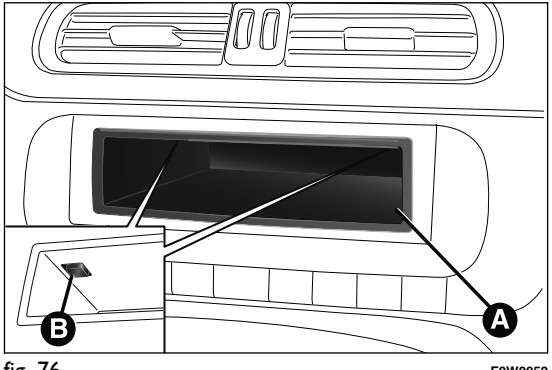

fig. 76 F0W0052

WARNING

If you wish to have a sound system installed after purchasing the car, first contact a Fiat Dealership whose qualified personnel will give you advise about a sound system that does not damage the battery charge. Excessive non-running consumption damages the battery and may cause your battery warranty to be terminated.

SETUP

(for versions/markets, where provided)

The system consists of:

❒ radio supply leads;

❒ radio housing;

❒ aerial (on car roof);

❒ according to the option requested, the setup consists of four or six speakers.

Setup for four speakers

(for versions/markets, where provided)

The system consists of:

❒ two 165-mm diameter full-range speakers in the front door panels;

❒ two 130-mm diameter full-range speakers in rear front door panels.

Setup for six speakers

(if requested as an optional, as an alternative to the basic audio level)

The system consists of:

❒ two 38-mm diameter tweeters in the front pillar at the sides of the windscreen;

❒ two 165-mm diameter mid-woofer speakers in the front door panels;

❒ two 130-mm diameter full-range speakers in rear front door panels.

PREPARATION TO INSTALL A PORTABLE NAVIGATION SYSTEM

On cars equipped with the Blue&Me™ system, there may be (on request) the preparation for installing the Blue&Me™ TomTom ® portable navigation system, available from Lineaccessori Fiat.

Install the portable navigation system by fitting the specific mount in the housing shown in fig. 77.

When the navigation system is not used it is recommended to remove the specific mount from its seat to avoid noise and/or vibrations.

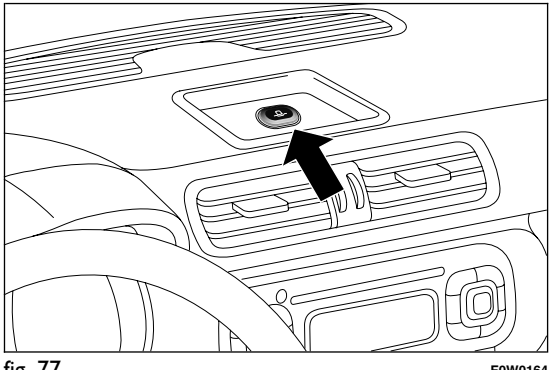

fig. 77 F0W0164

INSTALLING ELECTRICAL/ ELECTRONIC DEVICES

Electrical and electronic devices installed after buying the car in the context of after-sales service must carry the label (see fig. 78).

Fiat S.p.A. authorises the installation of transceivers provided that installation is carried out at a specialised centre, in a workmanlike fashion and in compliance with manufacturer's specifications.

IMPORTANT Traffic police may not allow the car on the road if devices have been installed which modify the features of the car. This may also cause invalidation of warranty in relation to faults caused by the change either directly or indirectly related to it.

FIAT S.p.A. shall not be liable for damage caused by the installation of accessories either not supplied or recommended by FIAT S.p.A. and not installed in compliance with the provided instructions.

fig. 78 DISPOSITIVI-ELETTRONICI

RADIO TRANSMITTERS AND MOBILE PHONES

Radio transmitter equipment (vehicle mobile phones, CB radios, amateur radio, etc.) cannot be used inside the car unless a separate aerial is mounted externally.

IMPORTANT The use of these devices inside the passenger compartment (without an external aerial) may cause the electrical systems to malfunction. This could compromise the safety of the car in addition to constituting a potential hazard for passengers' health.

In addition, transmission and reception of these devices may be negatively affected by the shielding effect of the car body. As far as the use of EC-approved mobile phones is concerned (GSM, GPRS, UMTS), follow the usage instructions provided by the mobile phone manufacturer.

REFUELLING THE CAR

Versions equipped with "Smart Fuel" system are provided with an inhibiter which prevents refuelling with incorrect fuel.

Accidental refuelling with non-compliant fuels (e.g. petrol in Diesel engines) can only occur in the case of versions equipped with fuel tank cap. Before refuelling, make sure that the fuel type is correct.

Stop the engine before refuelling.

PETROL ENGINES

Use unleaded petrol only, with an octane number (R.O.N.) no lower than 95. In order to prevent damage to the catalytic converter never introduce even the smallest amount of leaded petrol, even in the event of an emergency.

IMPORTANT An inefficient catalytic converter leads to harmful exhaust emissions, thus contributing to air pollution.

IMPORTANT Never use leaded petrol, even in small amounts or in an emergency, as this would damage the catalytic converter beyond repair.

DIESEL ENGINES

Operation at low temperatures

If the outside temperature is very low, the diesel thickens due to the formation of paraffin clots with consequent defective operation of the fuel supply system.

In order to avoid these problems, different types of diesel fuel are distributed according to the season: summer type, winter type and arctic type (cold/mountain areas). If refuelling with diesel fuel whose specifications are not suitable for the current temperature, it is advisable to mix TUTELA DIESEL ART additive in the proportions shown on the container with the fuel. Pour the additive into the tank before the diesel fuel.

When using or parking the car for a long time in the mountains or cold areas, it is advisable to refuel using locally available diesel. In this case, it is also advisable to keep the tank over 50% full.

For diesel engines, only use diesel fuel for motor vehicles in accordance with EN590 European specifications. The use of other products or mixtures may damage the engine beyond repair and consequently invalidate the warranty, due to the damage caused. If you accidentally refuel with another type of fuel, do not start the engine, and drain the tank. If the engine has been run, even for only a very short time, you will need to have the entire fuel system emptied in addition to the tank.

FILLING THE TANK

To fill the tank completely, top up twice after the first click of the fuel delivery gun. Further top-ups could cause faults in the fuel supply system.

REFUELLING PROCEDURE FOR VERSIONS EQUIPPED WITH "SMART FUEL" SYSTEM

"Smart Fuel" is a device integrated with the end of the fuel filler pipe which opens and recloses automatically when the fuel delivery gun is introduced/removed. "Smart Fuel" is provided with an inhibiter which prevents refuelling with incorrect fuel.

The refuelling procedure described below is illustrated on label B fig. 79, which is applied inside the fuel flap. The label also indicates the fuel type (UNLEADED FUEL=petrol, DIESEL=diesel fuel).

To refuel proceed as follows:

❒ open the flap A fig. 79 pulling it outwards;

❒ introduce the dispenser in the filler and refuel;

❒ at the end of refuelling, before removing the dispenser, wait for at least 10 seconds in order for the fuel to flow inside the tank;

❒ then remove the dispenser from the filler and close flap A.

Flap A fig. 79 is provided with a dust cowl C which prevents deposits of impurities and dust at the end of the filler when the flap is closed.

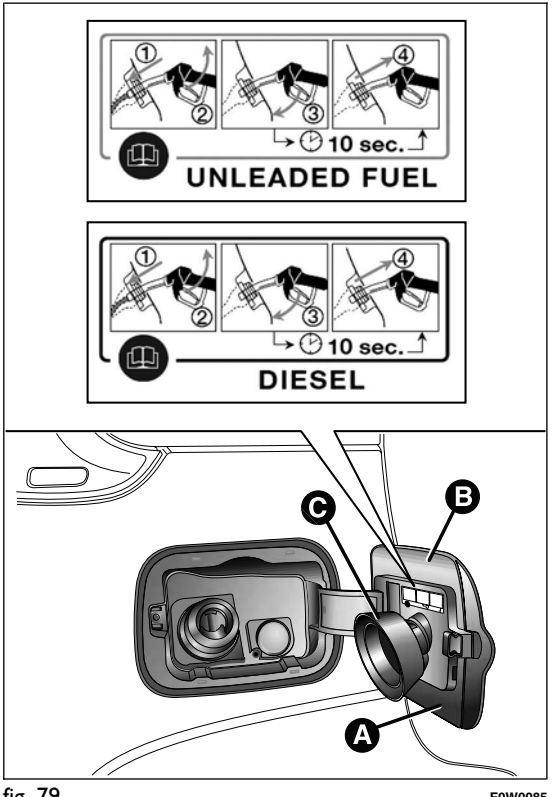

fig. 79 F0W0085

Emergency refuelling (only for versions equipped with "Smart Fuel")

If there is no fuel in the car or the supply circuit is completely empty, proceed as follows to reintroduce fuel to the tank:

❒ open the luggage compartment and take adapter B located in the tool box (versions equipped with space-saver wheel - for versions/markets, where provided) fig. 80 or in the Fix&Go Automatic container (versions equipped with Fix&Go Automatic) fig. 81;

❒ open the flap A pulling it outwards;

❒ insert adapter B in the filler as shown in fig. 82 and refuel;

❒ after refuelling, remove the adapter and close the flap;

❒ reintroduce the adapter in the box and put this back in the luggage compartment.

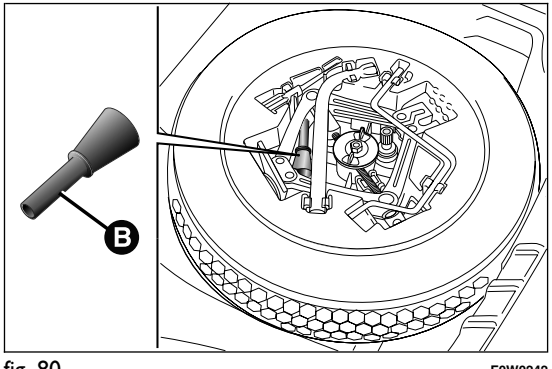

fig. 80 F0W0242

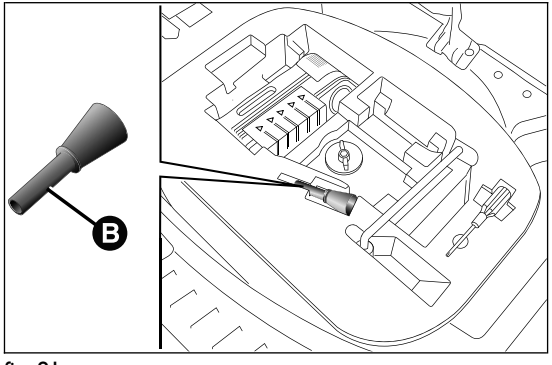

fig. 81 F0W0241

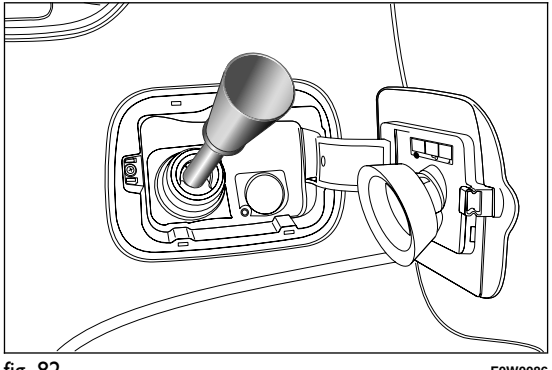

fig. 82 F0W0086

IMPORTANT INFORMATION FOR VERSIONS EQUIPPED WITH "Smart Fuel"

WARNING

Do not apply any object/plug to the end of the filler which is not provided for the car. The use of non-compliant objects/plugs could cause a pressure increase inside the tank, resulting in dangerous situations.

WARNING

Do not bring naked flames or lit cigarettes near to the fuel filler: fire risk. Keep your face away from the fuel filler to prevent breathing in harmful vapours.

IMPORTANT If the filler compartment is washed with a high pressure jet, keep it at a distance of at least 20 cm.

PROTECTING THE ENVIRONMENT

The following devices are used for reducing petrol fuel engine emissions: catalytic converter, oxygen sensors and evaporation control system

Do not let the engine run, even for a test, with one or more spark plugs disconnected.

The following devices are used for reducing diesel fuel engine emissions: oxidising catalytic converter, exhaust gas recirculation system (EGR) and particulate filter (DPF).

DIESEL PARTICULATE FILTER (DPF)

(for versions/markets, where provided)

This is a mechanical filter, fitted in the exhaust system, which almost completely eliminates carbon particle emissions.

WARNING

During normal service, the catalytic converter and the diesel particulate filter (DPF) reach high temperatures. Do not therefore park the car over inflammable materials (grass, dry leaves, pine needles, etc.): fire hazard.

SEAT BELTS

USING THE SEAT BELTS

The belt should be worn keeping the torso straight and rested against the backrest.

To fasten the seat belts, hold the tongue A fig. 83 and insert it into the buckle B, until it clicks into place. On removal, if it jams, let it rewind for a short stretch, then pull it out again without jerking.

To unfasten the seat belts, press button C. Guide the seat belt with your hand while it is rewinding, to prevent it from twisting. Through the reel, the belt automatically adapts to the body of the passenger wearing it, allowing freedom of movement.

WARNING

Never press button C fig. 83 when travelling.

The reel may lock when the car is parked on a steep slope: this is perfectly normal. Furthermore, the reel mechanism locks the belt if it is pulled sharply or in the event of sudden braking, collisions and high-speed bends.

The rear seat is fitted with inertia seat belts with three anchor points and a reel. Fasten the rear seat belts as shown in fig. 84 (4-seater versions) or (5-seater versions) fig. 85.

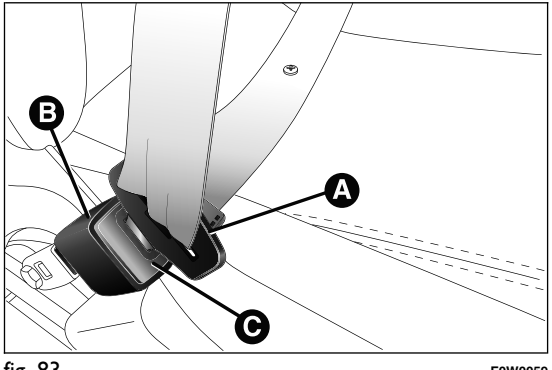

fig. 83 F0W0059

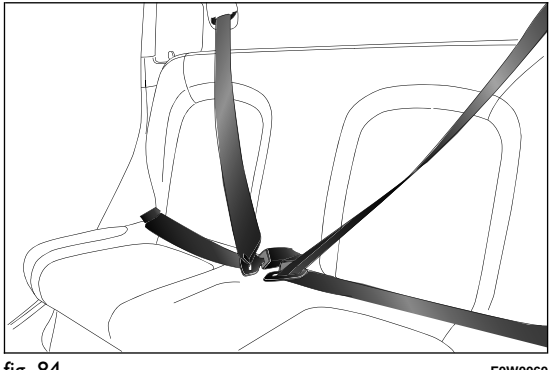

fig. 84 F0W0060

GETTING TO KNOW YOUR CAR
SAFETY
STARTING AND DRIVING
WARNING LIGHTS AND MESSAGES
IN AN EMERGENCY
SERVICING AND MAINTENANCE
TECHNICAL SPECIFICATIONS
INDEX

WARNING

Remember that in the event of a violent collision, back seat passengers not wearing seat belts also represent a serious danger for the front seat passengers.

IMPORTANT When putting the back seats back to their normal position, make sure the seat belts are positioned so they are ready to use.

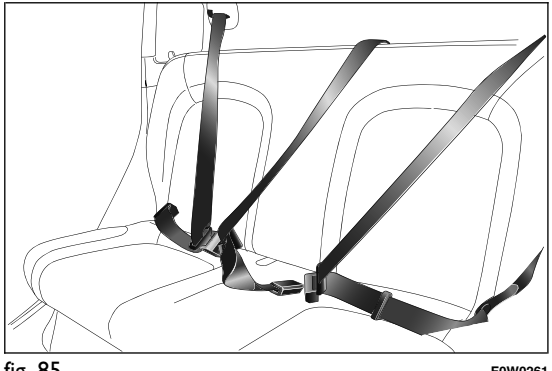

fig. 85 F0W0261

WARNING

The rear central seat belt (for versions where provided) is provided with a service buckle fig. 86. Do not use the seat belt with the service buckle not fastened. In this case there is a high risk of injury or death in the event of an accident. Before using the belt, always make sure that the service buckle is correctly fastened.

WARNING

The rear left and right side belts are provided with an adjustment device for the metal tongue position (metal hook). Adjust the tongue position with respect to the seat belt to improve comfort and reduce noise inside the passenger compartment.

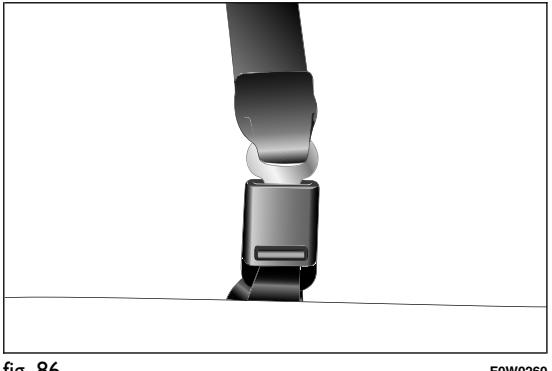

fig. 86 F0W0260

ADJUSTING THE SEAT BELT HEIGHT
(for versions/markets, where provided)

The height can be adjusted to 4 different positions. To adjust, press button A fig. 87 and lower or raise the grip B.

Always adjust the seat belt height adapting it to the passenger's body: this precaution may considerably reduce the risk of injury in the event of a collision.

Correct adjustment is obtained when the belt passes approximately half way between the shoulder and the neck.

For some versions, front seat belts have just one fixed anchor point C fig. 88 on the door pillar.

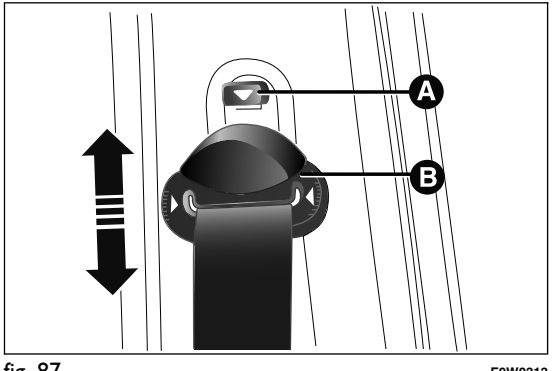

fig. 87 F0W0313

SBR SYSTEM (Seat Belt Reminder)

This system consists of a device which, in conjunction with the switching on of the warning light on the instrument panel and an intermittent acoustic signal, warns the driver and front passenger if their seat belts have not been fastened. The icon A fig. 89 indicates that the seat belt is not fastened. The icon B fig. 89 indicates that the seat belt is fastened.

For permanent deactivation, contact a Fiat Dealership. The SBR system can only be reactivated via the display Setup Menu (see “Knowing your car” section).

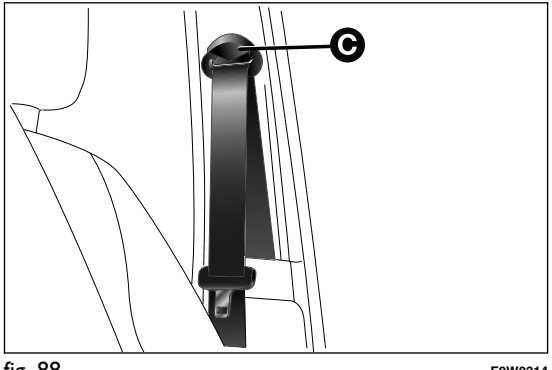

fig. 88 F0W0314

The amber warning lights operate as follows:

❒ 1 = front left seat (driver status for left-hand drive versions);

❒ 2 = rear left seat (passenger) (for versions/markets where provided);

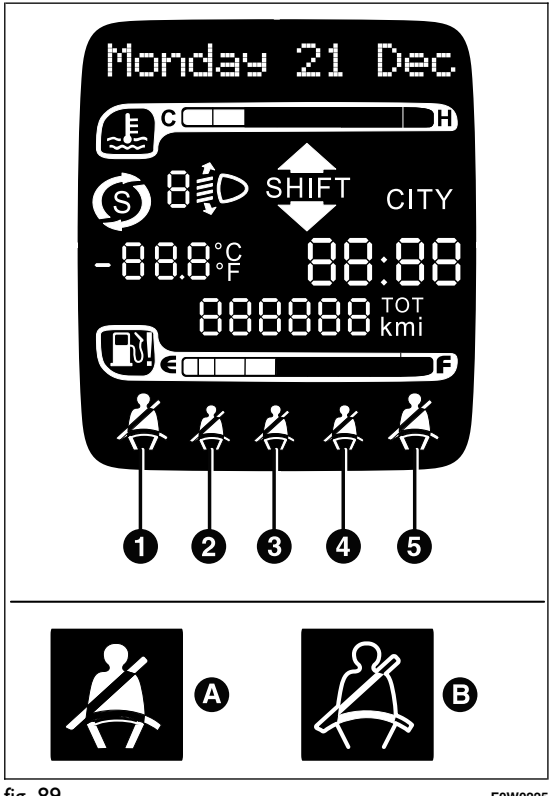

fig. 89 F0W0225

❒ 3 = rear centre seat (passenger) (for versions/markets where provided);

❒ 4 = rear right seat (passenger) (for versions/markets where provided).

❒ 5 = front right seat (passenger status for left-hand drive versions).

Front seats (warning light no. 1 = driver and no. 5 = passenger)

Driver

If the driver is the only occupant and their seat belt is not fastened, when 20 km/h is exceeded or when travelling at a speed between 10 and 20 km/h for longer than 5 seconds, an acoustic signal cycle will be started for the front seats (continuous acoustic signal for 6 seconds followed by a 90 second beep). The warning light will flash. Once the cycle is complete, the warning lights stay on with a fixed light until the car is turned off or the seat belt fastened.

If the seat belt is unfastened again while travelling, the acoustic reminder resumes as described previously and icon A fig. 89 switches on.

Passenger

A similar situation applies to the front passenger. The indication is also interrupted when the passenger leaves the car.

If both front seat belts are unfastened while the car is travelling a few seconds apart, the acoustic indication will refer to the most recent event and the

two warning lights will proceed with the visual indication independently.

Rear seats (warning light no. 2, no. 3 and no. 4)

For the rear seats, the reminder cycle is only activated when any seat belt is unfastened together with an acoustic signal (three beeps) (icon A fig. 89). If the condition of any (front or rear) seat belt changes, also the condition of the other (front/rear) seat belts is reported.

The visual indication (icon A fig. 89) will start and stop independently for each warning light if several seat belts are unfastened. The visual signal will change condition (icon B fig. 89) after the corresponding seat has been fastened again.

IMPORTANT When the ignition key is turned to MAR, if all the front and rear belts are already fastened the warning lights will remain in position B fig. 89 for 30 seconds.

IMPORTANT When the ignition key is turned to MAR, the belts fastened icons will remain in position B fig. 89, whilst the belts unfastened icons will be displayed as in position A of fig. 89. If the last belt is also fastened, the icons will remain in position B fig. 89 for 30 seconds then they will switch off.

PRETENSIONERS

The car is equipped with front seat belt pretensioners, which draw back the seat belts by several centimetres in the event of a strong frontal impact. This guarantees the perfect adherence of the seat belts to the occupants' bodies before the restraining action begins. It is evident that the pretensioners have operated when the belt withdraws towards the reel. This car is also equipped with a second pretensioner (in the kick plate area). Its activation is signalled by the shortening of the metal cable. A slight discharge of smoke may be produced during the activation of the pretensioner which is not harmful and does not involve any fire hazard.

IMPORTANT To obtain the highest degree of protection from the action of the pretensioning device, wear the seat belt tight to the chest and pelvis.

The pretensioner does not require any maintenance or lubrication: any changes to its original conditions will invalidate its efficiency. If, due to unusual natural events (floods, sea storms, etc.), the device has been affected by water and mud, it must be replaced.

WARNING

The pretensioner may be used only once. After it is triggered, have it replaced at a Fiat Dealership. Consult the data plate in the passenger compartment to check the status of the device (on front door edge panel or glove box). Go to a Fiat Dealership to have the device replaced when the expiration date approaches.

Operations which lead to knocks, vibrations or localised heating (over 100°C for a maximum of 6 hours) in the area around the pretensioners may cause damage or trigger them. These devices are not affected by vibrations caused by irregularities of the road surface or low obstacles such as kerbs, etc. Contact a Fiat Dealership for any assistance.

LOAD LIMITERS

To increase passenger safety, the front seat belt reels contain a load limiter which allows controlled sag in such a way as to dose the force acting on the chest and shoulders during the belt restraining action in the case of frontal collisions.

GENERAL INSTRUCTIONS FOR USING THE SEAT BELTS

The driver is responsible for respecting, and ensuring that all the other occupants of the car also respect, the local laws in force in relation to the use of the seat belts. Always fasten the seat belts before starting.

Seat belts must also be worn by expectant mothers: the risk of injury in the event of an accident is greatly reduced for them and the unborn child if they are wearing a seat belt. Pregnant women must position the lower part of the belt very low down so that it passes over the pelvis and under the abdomen (see fig. 90).

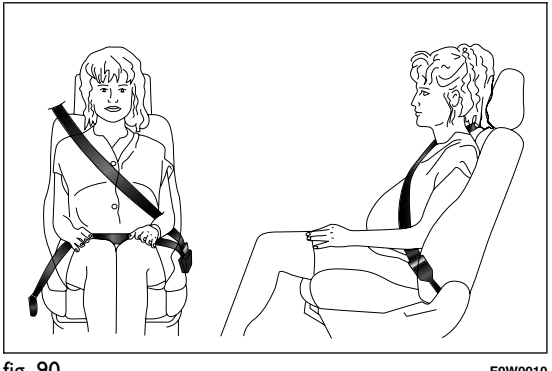

fig. 90 F0W0010

WARNING

For maximum safety, keep the back of your seat upright, lean back into it and make sure the seat belt fits closely across your chest and pelvis. Always fasten the seat belts on both the front and the rear seats! Travelling without wearing seat belts will increase the risk of serious injury and even death in the event of an accident.

WARNING

Removing or otherwise tampering with safety belt and pretensioner components is strictly prohibited. Any operations on these components must be performed by qualified and authorised technicians. Always go to a Fiat Dealership.

The belt must not be twisted. The upper part must pass over the shoulder and cross the chest diagonally. The lower part must adhere to the pelvis (as shown in fig. 91) rather than the abdomen of the passenger. Never use devices (clips, pegs, etc.) to hold the seat belt away from your body.

Each seat belt must be used by only one person. Never travel with a child sitting on the passenger's lap and a single belt to protect them both fig. 92. In general, do not place any objects between the person and belt.

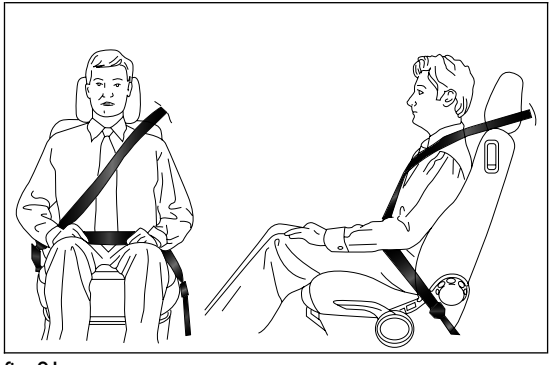

fig. 91 F0W0011

fig. 92 F0W0012

WARNING

If the belt has been sharply pulled, for example as the result of an accident, the safety belt, together with the anchoring devices, the anchoring device mounting screws and the pretensioner must be completely replaced. Even if the belt does not present any exterior signs of wear or damage, it may have lost its restraining properties.

SEAT BELTS MAINTENANCE

Observe the following precautions for correct seat belt maintenance:

❒ always use the belt with the strap well stretched and never twisted; make sure that it is free to run without obstructions;

❒ replace the belt after an accident of a certain severity even if it does not appear to be damaged. Always replace the belt if the pretensioners were deployed;

❒ to clean the belt, wash by hand with water and neutral soap, rinse and leave to dry in the shade. Never use strong detergents, bleach, paints or any other substance which could damage the belt fibres;

❒ prevent the reels from getting wet: their correct operation is only guaranteed if water does not get inside

❒ replace the seat belt when it shows wear or cuts.

WARNING

The front passenger belt (for versions where provided) is provided with an adjustment device for the metal tongue position (metal hook). Adjust the tongue position with respect to the seat belt to improve comfort and reduce noise inside the passenger compartment.

CARRYING CHILDREN SAFELY

All vehicle's occupants must be protected, babies and children included! For optimal protection in the event of a collision, all passengers must be seated and wearing adequate restraint systems.

This prescription is compulsory in all EC countries according to EC Directive 2003/20/EC.

This is even more important for children since their head is larger and heavier than an adult's in proportion to their body, while their muscular and bone structures are not fully developed.

Therefore, correct restraint systems other than adult seat belts are necessary to reduce as much as possible the risk of injuries in case of accident, braking or sudden manoeuvre.

Children must be suitably restrained inside the vehicle according to their body: weight and height. Several children restraint system types are available; always choose the one most suitable for the child.

In Europe the characteristics of children restraint systems are ruled by the regulation ECE-R44, dividing them into five weight groups:

Group	Weight groups
Group 0	up to 10 kg
Group 0+	up to 13 kg
Group 1	9-18 kg
Group 2	15-25 kg
Group 3	22-36 kg

All restraint devices must bear the type-approval data along with the control mark on a label firmly secured to the child seat which must never be removed.

Over 1.50 m in height, from the point of view of restraint systems, children are considered as adults and wear the seat belts normally. Lineaccessori Fiat offers child restraint systems for each weight group. These devices are recommended having been specifically designed for Fiat cars.

WARNING

When an active passenger air bag is fitted, DO NOT install backwards-facing child seats on the front seat. Deployment of the air bag in an accident could cause fatal injuries to the baby regardless of the severity of the collision. It is advisable to always carry children in a child seat on the rear seat, which is the most protected position in the event of a collision.

WARNING

In case of backwards-facing child seat installed on the passenger side front seat, the passenger side front and side bags must be deactivated through the Setup menu. Deactivation should be verified by checking the warning light switching on in the instrument panel. The passenger seat must also be slid back as far as possible in order to prevent the child seat from coming into contact with the dashboard.

FITTING "UNIVERSAL" CHILD SEAT (with seat belts)

GROUP 0 and 0+

Babies up to 13 kg must be carried facing backwards on a child seat of a type as shown in fig. 93 which, supporting the head, does not induce stress on the neck in the event of sharp decelerations.

The child seat is restrained by the car seat belts, as shown in fig. 93 and it must restrain the child in turn with its own belts.

fig. 93 F0W0013

GROUP 1

From 9 kg to 18 kg in weight, children may be carried facing forwards fig. 94.

WARNING

Child seats with Isofix attachments are available for a safe anchoring to the seat without using the car seat belts.

WARNING

The figures are only examples for fitting purposes. Install the car seat according to the instructions, which must be included with this type of restraint system.

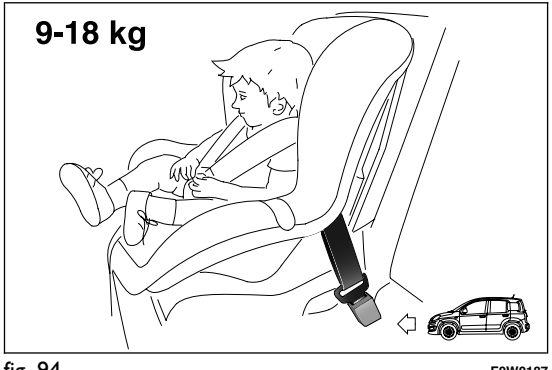

fig. 94 F0W0187

GROUP 2

Children from 15 to 25 kg may use the car seat belts directly fig. 95.

The child seat is now needed only to position the child correctly with respect to the belts so that the diagonal section crosses the child's chest and never the neck, and the lower part is snug on the pelvis not the abdomen.

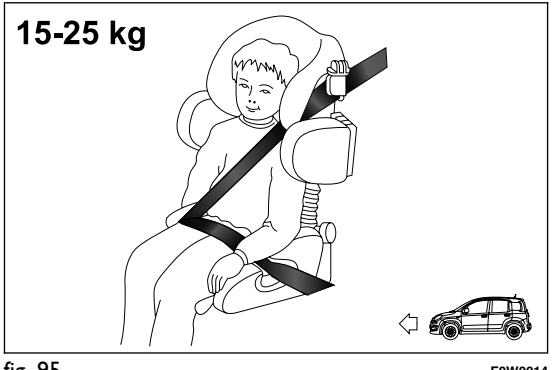

fig. 95 F0W0014

GROUP 3

For children from 22 kg up to 36 kg suitable risers are available to position the seat belt correctly.

The fig. 96 shows an example of correct child seat positioning on the rear seat.

Children over 1.50 m in height wear seat belts like adults.

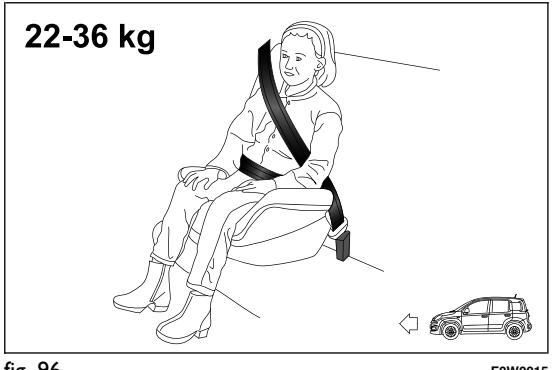

fig. 96 F0W0015

WARNING

The figures are only examples for fitting purposes. Install the car seat according to the instructions, which must be included with this type of restraint system.

SUITABILITY OF PASSENGER SEATS FOR UNIVERSAL CHILD SEAT USE

The car complies with the new European Directive 2000/3/EC which governs the arrangement possibilities for child restraints on the various seats of the car as shown in the following table:

Group	Weight groups	Front passenger seat	Rear central passenger (for versions/markets, where provided)	Rear side passengers
Group 0, 0+	up to 13 kg	U	U	U
Group 1	9-18 kg	U	U	U
Group 2	15-25 kg	U	U	U
Group 3	22-36 kg	U	U	U

U= suitable for child restraint systems of the "Universal" category, according to European Standard EEC-R44 for the specified "Groups".

Main safety rules to be followed when carrying children:

❒ Install the child seats on the rear seat, which is the most protected position in the event of an accident.

❒ If the passenger's front air bag is deactivated always check the warning light on the instrument panel to make sure that it has actually been deactivated.

❒ Carefully follow the instructions supplied with the child seat which are mandatory by law. Keep the instructions in the car along with the other documents and this handbook. Do not use second-hand child seats without instructions.

❒ Always check that the seat belt is well fastened by pulling on it.

❒ Only one child is to be strapped into each retaining system; never carry two children using one child seat.

❒ Always check that the seat belts do not restrain the child's throat.

❒ While travelling, do not let the child sit incorrectly or release the belts.

❒ Never carry children on your lap, even newborns. No-one can restrain a child in the event of an accident.

❒ In the event of an accident, replace the child seat with a new one.

"ISOFIX" CHILD SEAT SETUP

The car can be fitted with a Universal Isofix child seat, a new European standardised system for carrying children safely.

Isofix systems can be fitted alongside a traditional child seat. An example of Universal Isofix child seat covering weight group 1 is shown in fig. 97. Specific Isofix child seats cover the other weight groups. These seats must be designed, tested and type-approved specifically for this car (see the list of cars attached to the child seat).

IMPORTANT The rear central seat (for versions where provided) and the passenger front seat are not approved for any type of Isofix child seat.

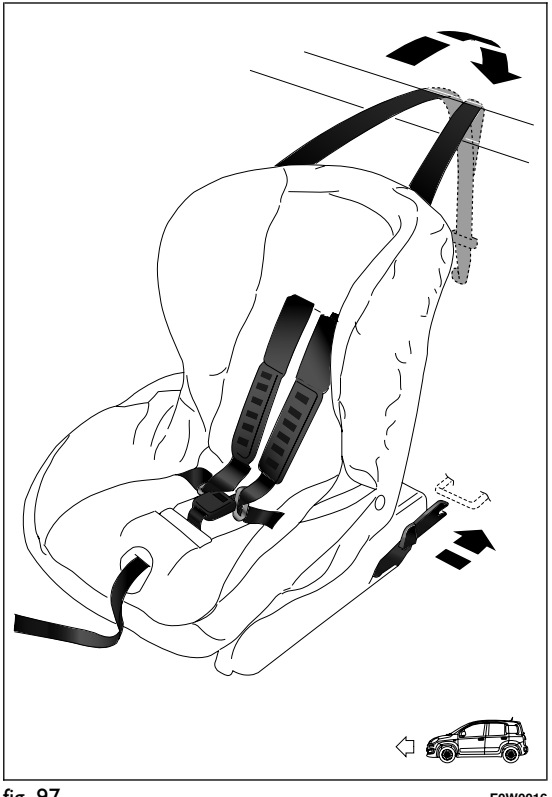

fig. 97 F0W0016

INSTALLING A UNIVERSAL ISOFIX CHILD SEAT

Secure the seat using the special lower metal rings A fig. 98 positioned between rear backrest and cushion, then fix the upper belt (provided with the child seat) to the attachments B fig. 98 located in the rear part of the backrest, for versions with split rear seat.

For versions with sliding split rear seat, use the suitable catches shown in fig. 100 on the tube at the base of the backrest.

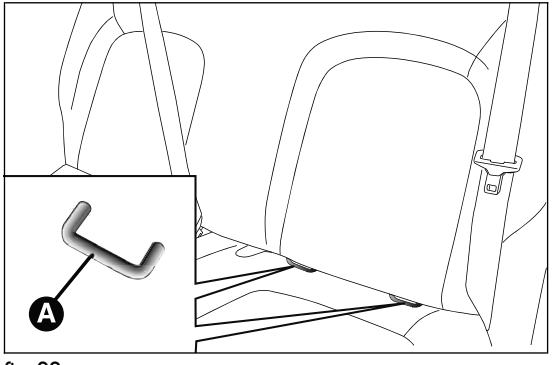

fig. 98 F0W0177

"Universal Isofix" child seats can be fitted alongside traditional child seats. Remember that when using a Universal Isofix child seat, you can only use approved child seats with the marking ECE R44 "Universal Isofix".

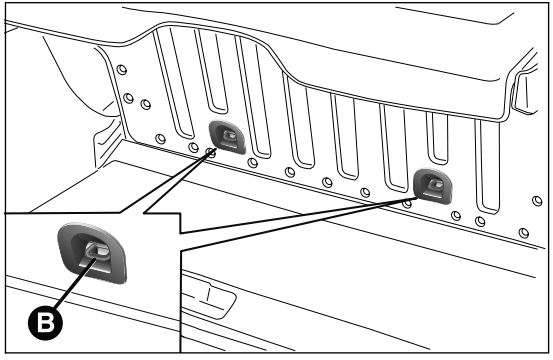

fig. 99 F0W0087

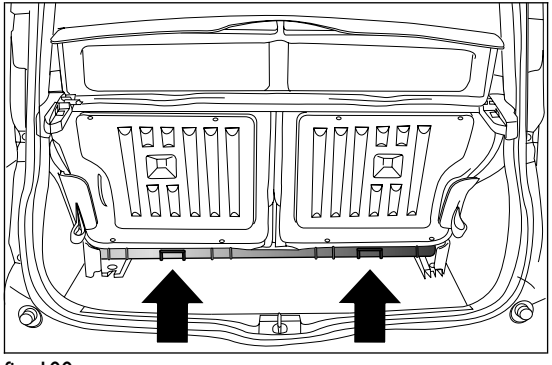

fig. 100 F0W0427

Universal Isofix “Duo Plus” child seats and the special "G 0/1 S" seat are available from Lineaccessori Fiat. Contact the dealer for more information. For further details on installation and/or use, refer to the instruction manual provided with the child seat.

WARNING

Fit the child seat when the car is stationary. The child seat is correctly anchored to the brackets when you hear the click. Follow the instructions for assembly, disassembly and positioning that the manufacturer must supply with the child seat.

SUITABILITY OF PASSENGER SEATS FOR ISOFIX CHILD SEAT USE

The table below shows the various installation possibilities for Isofix child seats on seats fitted with Isofix attachments in compliance with European standard ECE 16.

Weight group	Child seat position	ISOFIX size class	Rear side Isofix positions
Group 0 up to 10 kg	Facing backwards	E	IL (*)
Group 0+ up to 13 kg	Facing backwards	E	IL (*)
	Facing backwards	D	IL (*)
	Facing backwards	C	X
Group 1 from 9 up to 18 kg	Facing backwards	D	IL (*)
	Facing backwards	C	X
	Facing forwards	B	IUF
	Facing forwards	BI	IUF
	Facing forwards	A	IUF

IL: suitable for ISOFIX child restraint systems specific and approved for this type of car.

(*): the Isofix child seat can be installed by adjusting the front seat.

X: ISOFIX position not suitable for ISOFIX child seats in this group of weight and/or size class.

IUF: suitable for Isofix restraint systems to be positioned facing forwards, universal class (fitted with third upper mounting), approved for the relevant weight group.

AIR BAGS

The car is fitted with front air bags for driver and passenger, front side bags for driver and passenger chest-shoulder protection (for versions/markets, where provided) and window bags for protecting the heads of front occupants.

FRONT AIR BAGS

The front (driver and passenger) air bags protect the front seat occupants in the event of head-on impacts of medium-high severity, by placing the bag between the occupant and the steering wheel or dashboard.

Therefore non-deployment in other types of impacts (side impacts, rear shunts, roll-overs, etc.) does not indicate a system malfunction.

Front (driver and passenger) air bags are not a replacement of but complementary to the seat belts, which you are recommended to always wear, as specified by law in Europe and most non-European countries.

In the event of an impact, those not wearing a seat belt move forwards and may come into contact with the bag which is still inflating. The protection offered by the bag is compromised in these circumstances.

Front airbags may not deploy in the following situations:

- ❒ frontal impacts against highly deformable objects not involving the front surface of the car (e.g. wing collision against guard rail, etc.);
- ❒ car wedging under other vehicles or protective barriers (e.g. trucks or guard rails);

they may not provide any additional protection compared with seat belts, so their activation would be inappropriate. In these cases, non-deployment does not indicate a system malfunction.

WARNING

Do not apply stickers or other objects on the steering wheel, on the dashboard in the passenger side air bag area, on side upholstery on roof and on the seats. Never put objects (e.g. mobile phones) on the passenger's side dashboard since they could interfere with correct inflation of the air bag and also cause serious injury to the passengers.

Driver's front air bag

This consists of an instantly inflating bag contained in a special recess in the centre of the steering wheel fig. 101.

WARNING

Always drive keeping your hands on the steering wheel rim so that the air bag can inflate freely if necessary. Do not drive with your body bent forward. Keep your back straight against the backrest.

Passenger side front air bag

This consists of an instantly-inflating bag contained in a special compartment in the dashboard fig. 102: this bag has a larger volume than that on the driver's side.

WARNING

SEVERE DANGER: When an active passenger air bag is fitted, DO NOT install backwards-facing child seats on the front seat. Deployment of the air bag following an impact could cause fatal injuries to the child. Always deactivate the passenger air bag if it is needed to place a child seat on the front seat. The passenger seat must also be slid back as far as possible in order to avoid the child seat from coming into contact with the dashboard. Although this is not mandatory by law, the air bag should be immediately reactivated when children are no longer transported to ensure better protection for adults.

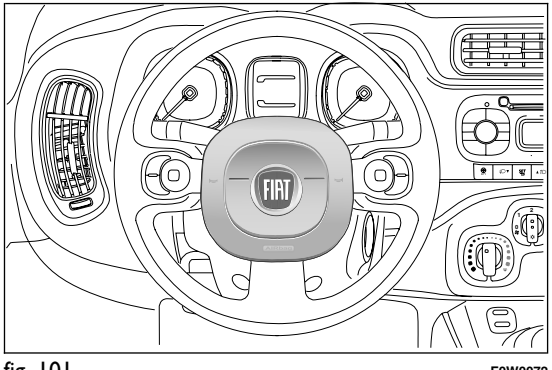

fig. 101 F0W0072

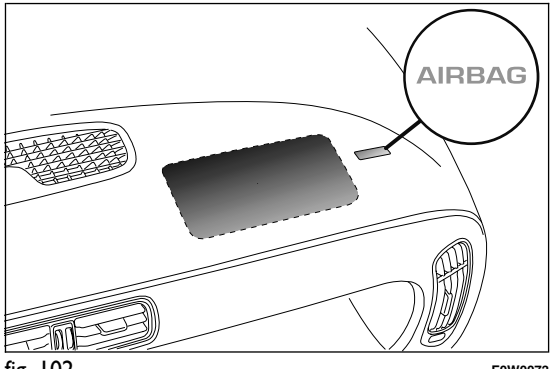

fig. 102 F0W0073

Deactivation of passenger side front air bag and side bag for chest/pelvis protection (for versions/markets, where provided)

If a child must be carried in backwards-facing seat on the front seat, deactivate the front passenger side air bag and side bags for chest/shoulder protection (for versions/markets where provided). With the air bags deactivated, the warning light switches on in the instrument panel.

IMPORTANT To deactivate the air bags see the description in the "Getting to know your car" chapter, "Menu Options" paragraph.

SIDE BAGS (Side bag - Window bag)

The car is fitted with front side airbags for driver and passenger (for versions/markets where provided) for protecting the chest and pelvis, and window bags (for versions/markets where provided) for protecting the heads of front and rear occupants.

Side bags protect occupants from side-on crashes of medium/high severity by placing the bag between the occupant and the internal parts of the side structure of the vehicle.

Non-activation of side bags in other types of collisions (head-on collisions, rear shunts, roll-overs, etc...) is not an indication of system malfunction.

Side bags
(for versions/markets, where provided)

These comprise two types of bags located in the front seat backrests fig. 103 which protect the chest and shoulder area of the occupants in the event of a side impact of medium-high severity.

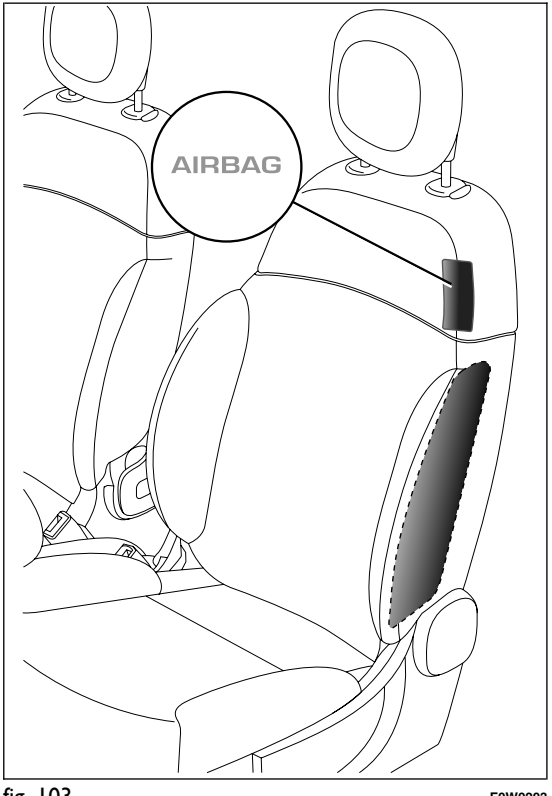

fig. 103 F0W0203

Window bag

This consists of two "curtain" bags housed behind the side upholstery of the roof fig. 104and covered with finishing elements, which protect the heads of front and rear occupants in the event of a side impact thanks to a wide bag deployment area.

The deployment of side bags in the event of side impacts of low severity is not required.

In the event of a side impact, the system provides best protection if the passenger sits on the seat in a correct position, thus allowing correct window bag deployment.

The window bag is not available for the VAN version.

IMPORTANT Do not hook rigid objects to the coat hooks and to the support handles.

fig. 104 F0W0226

IMPORTANT Do not rest your head, arms or elbows on the door, windows or the area in which the window bag is located to avoid possible injury during air bag inflation.

IMPORTANT Never lean your head, arms or elbows out of the window.

IMPORTANT

Do not wash the seats with water or pressurised steam (by hand or at automatic seat washing stations).

The front air bags and/or side bags may be deployed if the car is subject to violent impacts involving the underbody area (e.g. violent impacts against steps or kerbs, big holes or dips in the road etc.).

When the air bag deploys it emits a small amount of dust: the dust is harmless and does not indicate the beginning of a fire. The dust may irritate the skin and eyes however: in this case, wash with neutral soap and water.

Air bag checking, repair and replacement must be carried out at a Fiat Dealership.

If the car is scrapped, have the air bag system deactivated at a Fiat Dealership.

Pretensioners and air bags are deployed in different ways, according to the type of impact. Failure to deploy of one of the devices does not necessarily indicate a system malfunction.

WARNING

If the warning light stays on whilst driving, a fault may have occurred in the restraint systems. In this case the air bags or pretensioners may not be deployed in an impact or, in a few cases, they may be deployed accidentally. Before continuing, contact a Fiat Dealership immediately to have the system checked.

WARNING

In the event of "yellow" warning light failure, the "red" warning light switches on and, for versions/markets where provided, the explosive charges of the passenger air bag and the side bags are deactivated. When the "red" warning light is on, before proceeding, contact a Fiat Dealership to have the system immediately checked (see previous warning).

WARNING

On vehicles with side bags, do not cover the front seat backrests with extra covers.

WARNING

Do not travel carrying objects in your lap, in front of your chest or between your lips (pipe, pencils, etc.): they could cause severe injury if the air bag is deployed.

WARNING

The expiry dates of the explosive charge are shown on a specific label contained in the glove box. Refer to the Fiat Dealership when it's time to replace them.

WARNING

If the car has been stolen or in the case of attempt to steal it, if it has been subjected to vandalism or floods, have the air bag system checked by a Fiat Dealership.

WARNING

If the key is inserted and turned to MAR when no faults are indicated by the warning lights, air bags may be deployed if another vehicle crashes into the vehicle even if the engine is not running and the vehicle is stationary. For this reason, children must never occupy the front seat, even if the car is not moving. On the other hand, if the key is inserted in STOP position, none of the safety devices (air bags or pretensioners) will be deployed in the event of impact. Non-deployment of these devices does not indicate a system malfunction.

WARNING

For versions/markets where provided, when the ignition key is turned to MAR, the "yellow" warning light switches on for a few seconds. If the passenger air bag/side bag is active, the "yellow" warning light switches off after a few seconds. If the passenger air bag/side bag is NOT active, the "yellow" warning light stays on.

WARNING

The air bag deployment threshold is higher than that of the pretensioners. For collisions in the range between the two thresholds, it is normal for only the pretensioners to be activated.

WARNING

The air bag does not replace seat belts but increases their effectiveness. Because front air bags are not deployed for low-speed crashes, side collisions, rear-end shunts or rollovers, occupants are protected, in addition to any side bags, only by their seat belts, which must therefore always be fastened.

WARNING

If the "red" warning light does not switch on for a few seconds when the key is turned to MAR, there may be a fault with the "red" warning light. In this case, the "yellow" warning light starts to flash after a few seconds and, for versions/markets where provided, the explosive charges of the passenger air bag and the side bag are deactivated. Before continuing, contact a Fiat Dealership immediately to have the system checked.

GETTING TO KNOW YOUR CAR
SAFETY
STARTING AND DRIVING
WARNING LIGHTS AND MESSAGES
IN AN EMERGENCY
SERVICING AND MAINTENANCE
TECHNICAL SPECIFICATIONS
INDEX

STARTING THE ENGINE

STARTING PROCEDURE FOR PETROL VERSIONS

0.9 TwinAir 65 HP and 85 HP versions excluded

Proceed as follows:

❒ engage the handbrake and place the gearbox lever in neutral;

❒ fully press the clutch pedal without touching the accelerator;

❒ turn the ignition key to AVV and release it as soon as the engine starts.

If the engine does not start at the first attempt, return the ignition key to STOP before repeating the procedure.

If, when the ignition key is at MAR-ON, the instrument panel warning light remains on together with warning light , turn the key to STOP and then back to MAR-ON; if the warning light remains on, try the other keys provided with the vehicle.

Contact a Fiat Dealership if you still cannot start the engine.

Never leave the ignition key in MAR-ON position when the engine is stopped.

For 0.9 TwinAir 65 HP and 85 HP versions

Proceed as follows:

❒ engage the handbrake and place the gear lever in neutral or fully press the clutch pedal if a gear other than neutral is engaged;

❒ turn the ignition key to AVV and release it as soon as the engine starts.

Note If the vehicle does not start at the first attempt, return the ignition key to STOP and repeat the starting procedure placing the gear lever in neutral and fully pressing the clutch pedal.

If, when the ignition key is at MAR-ON, the instrument panel warning light remains on together with warning light , turn the key to STOP and then back to MAR-ON; if the warning light remains on, try the other keys provided with the vehicle.

Contact a Fiat Dealership if you still cannot start the engine.

Never leave the ignition key in MAR-ON position when the engine is stopped.

STARTING PROCEDURE FOR DIESEL VERSIONS

Proceed as follows:

- ❒ engage the handbrake and place the gearbox lever in neutral;
- ❒ turn the ignition key to MAR-ON: the warning lights and on the instrument panel will turn on;
- ❒ wait for the warning lights and to switch off;
- ❒ fully press the clutch pedal without touching the accelerator;
- ❒ turn the ignition key to AVV as soon as warning light switches off. Waiting too long will waste the heating work carried out by the plugs. Release the key as soon as the engine starts.

IMPORTANT With cold engine, the accelerator must be entirely released when turning the ignition key to position AVV.

If the engine does not start at the first attempt, return the ignition key to STOP before repeating the procedure.

If, when the ignition key is at MAR-ON the warning light remains lit, turn the key to STOP and then back to MAR-ON; if the warning light remains lit, try with the other keys provided with the car.

Contact the Fiat Dealership if the engine still will not start.

Warning light will flash for 60 seconds after starting or during prolonged cranking to indicate a fault with the glow plug heating system. You can use the car as usual if the engine starts but you should contact a Fiat Dealership as soon as possible.

WARNING

It is dangerous to run the engine in enclosed areas. The engine takes in oxygen and releases carbon dioxide, carbon monoxide and other toxic gases.

WARNING

Remember that the brake servo and power steering are not operational until the engine has been started, therefore much effort than usual is required on the brake pedal and steering wheel.

We recommend that during the initial period you do not demand to full performance from the car (e.g. excessive acceleration, long journeys at top speed, sharp braking etc.).

When the engine is switched off never leave the key turned to MAR-ON to prevent useless current absorption from draining the battery.

Never jump start the engine by pushing, towing or coasting downhill. This could cause fuel to flow into the catalytic converter and damage it beyond repair.

WARMING UP THE ENGINE JUST AFTER IT HAS STARTED

Proceed as follows:

❒ drive off slowly, letting the engine turn at medium revs. Do not accelerate abruptly;

❒ do not demand full performance at first. Wait until the second bar on the engine coolant temperature gauge switches on.

STOPPING THE ENGINE

Turn the ignition key to STOP while the engine is idling.

IMPORTANT After a demanding drive, before turning the engine off you should allow it to idle to allow the temperature in the engine compartment to decrease.

A quick burst on the accelerator before turning off the engine serves absolutely no practical purpose, it wastes fuel and is especially damaging to turbocharged engines.

PARKING

Stop the engine and engage the handbrake. Engage a gear (1st gear if parked uphill or reverse if facing downhill) and leave the wheels turned. If the car is parked on a steep slope block the wheels with a wedge or stone. Always remove the ignition key when leaving the car.

WARNING

Never leave children unattended in the car. Always remove the key from the ignition when leaving the car and take it with you.

HANDBRAKE

To engage the handbrake pull lever A fig. 105 upwards until the car is secured. To release the handbrake, raise lever A slightly, hold down button B and lower the lever.

If the car is parked on a steep slope, it is also advisable to block the wheels with a wedge or stone.

Never leave children in the unattended car. Always remove the ignition key when leaving the car and take it out with you.

WARNING

The car should be braked after a few clicks of the lever, if it is not, contact a Fiat Dealership to have it adjusted.

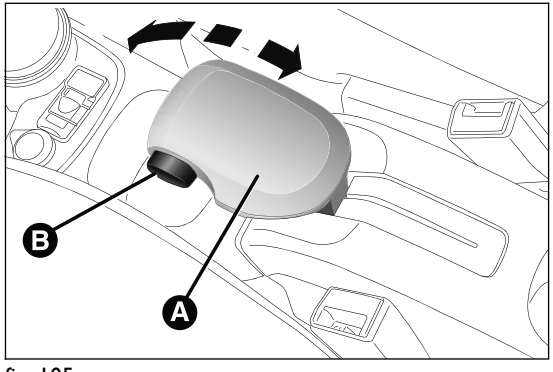

fig. 105 F0W0074

USING THE GEARBOX

To engage the gears, fully depress the clutch pedal and put the gear lever into the required position (the diagram is shown on the knob fig. 106).

For 0.9 TwinAir 65 HP, 85 HP and 1.2 8V 69 HP versions, to engage reverse R from neutral, lift the ring A fig. 106 and shift the lever to the right and back.

For 1.3 16V MultiJet version: to engage reverse R from neutral position, shift the lever to the right and then back.

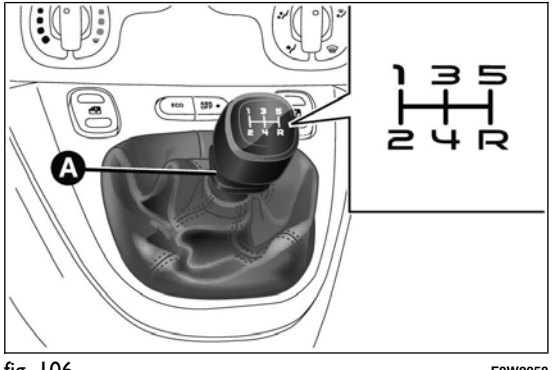

fig. 106 F0W0058

WARNING

The clutch pedal should be used only for gear changes. Do not drive with your foot resting on the clutch pedal, however lightly. For versions/markets where provided, the electronic clutch control could cut in, interpreting the incorrect driving style as a fault.

IMPORTANT Reverse can only be engaged when the car is completely stationary. With the engine running, wait for at least 2 seconds with the clutch pedal fully pressed before engaging reverse to prevent damage to the gears and grating.

WARNING

Press the clutch pedal fully to change gears correctly. It is therefore essential that there is nothing under the pedals: make sure the mats are lying flat and do not get in the way of the pedals.

Do not drive with your hand resting on the gear lever as the force exerted, even if slight, could lead over time to premature wear of the gearbox internal components.

SAVING FUEL

Here are some suggestions which can help you to save fuel and lower harmful emissions.

GENERAL CONSIDERATIONS

Car maintenance

Have checks and adjustments carried out in accordance with the "Scheduled Servicing Plan".

Tyres

Check the tyre pressures at least once every 4 weeks: if the pressure is too low, consumption levels increase as resistance to rolling is higher.

Unnecessary loads

Do not travel with an overloaded boot. The weight of the car and its arrangement greatly affect fuel consumption and stability.

Roof rack/ski rack

Remove the roof rack or the ski rack from the roof after use. These accessories lower aerodynamic penetration and adversely affect consumption levels. When transporting particularly large objects, use a trailer if possible.

Electrical devices

Only use electrical devices for the amount of time needed. The heated rear window, additional headlights, windscreen wipers and heater fan need a considerable amount of energy, therefore increasing fuel consumption (by up to 25% in the urban cycle).

Climate control system

The use of the climate control system leads to higher fuel consumption. If the temperature outside permits, try to use ventilation only.

Devices for aerodynamic control

The use of non-certified devices for aerodynamic control may adversely affect air drag and fuel consumption.

DRIVING STYLE

Starting

Do not warm the engine with the car at a standstill or at idle or high speed: under these conditions the engine warms up much more slowly, increasing consumption and emissions. It is therefore advisable to move off immediately, slowly, avoiding high speeds: in this way the engine will warm up more quickly.

Unnecessary actions

Avoid revving up when at traffic lights or before switching off the engine. This action and also double declutching is absolutely pointless on modern cars and also increases consumption and pollution.

Gear selection

Use a higher gear as soon as traffic and road conditions allow. Using a low gear for faster acceleration will increase consumption.

In the same way improper use of a high gear increases consumption, emissions and engine wear.

Maximum speed

Fuel consumption increases considerably with speed. Maintain a constant speed, avoiding unnecessary braking and acceleration, which cost in terms of both fuel and emissions.

Acceleration

Sudden acceleration has a very negative effect on fuel consumption and emissions: accelerate gradually.

CONDITIONS OF USE

Cold starting

Short distances and frequent cold start-ups will prevent the engine from reaching optimal running temperature.

Consequently, both consumption (from +15 to +30% on urban cycle) and emissions will increase.

Traffic and road conditions

Rather high fuel consumption is caused by heavy traffic, for instance when travelling in a queue with frequent use of low gears or in large towns with many traffic lights. Winding mountain roads and rough road surfaces also adversely affect consumption.

Stops in traffic

During prolonged stops (e.g. level crossings) the engine should be switched off.

TOWING TRAILERS

IMPORTANT NOTES

For towing caravans or trailers the car must be fitted with a type-approved tow hook and an adequate electrical system. Installation must be carried out by a specialist.

Fit any specific and/or additional rear view mirrors as specified by the Highway Code.

Remember that when towing a trailer, steep hills are harder to climb, braking distances increase and overtaking takes longer depending on the overall weight of the trail.

Engage a low gear when driving downhill, rather than constantly using the brake.

The weight of the trailer on the car's tow hook will reduce the load capacity of the car by the same amount. To make sure that the maximum towable weight is not exceeded (given in the car registration document) account should be taken of the fully laden trailer, including accessories and luggage.

Respect the speed limits specific to each country for vehicles towing trailers. In any case, the maximum speed must not exceed 100 km/h.

An electric brake or winch must be powered directly by the battery through a cable with a cross-section of no less than 2.5 mm^2.

In addition to the electrical branches, the vehicle's electrical system can be connected only to the supply cable for an electric brake and to the cable for an internal trailer light, though not more than 15 W. For connections, use the preset control unit with a battery cable with section no less than 2.5 mm^2.

IMPORTANT The use of auxiliary loads other than external lights (electric brake, winch, etc.) must be used with engine running.

IMPORTANT To install a tow hook contact a Fiat Dealership.

WARNING

The ABS with which the car may be equipped will not control the braking system of the trailer. Particular caution is required on slippery roads.

WARNING

Never modify the braking system of the car to control the trailer brake. The trailer braking system must be fully independent of the car's hydraulic system.

SNOW TYRES

Use snow tyres of the same size as the normal tyres provided with the car.

Fiat Dealership will be happy to provide advice concerning the most suitable type of tyre for the customer's requirements.

For the type of tyre to be used, inflation pressures and the specifications of snow tyres, follow the instructions given in paragraph "Wheels" in section "Technical specifications".

The winter performance of these tyres is considerably reduced when the tread thickness is less than 4 mm. Replace them in this case.

Due to the specific characteristics of snow tyres, in normal weather conditions or on long motorway journeys, the performance of these tyres is lower than that of standard tyres. Their usage should therefore be restricted in accordance with their type approval.

IMPORTANT When using snow tyres with a maximum speed index below the one that can be reached by the car (increased by 5%), place a notice in the passenger compartment, plainly in view, which states the maximum speed allowed by the snow tyres (as per EC Directive).

All four tyres should be the same (brand and track) to ensure greater safety when driving and braking and good driveability. Remember that you should not change the rotation direction of the tyres.

WARNING

The maximum speed for snow tyres marked "Q" is 160 km/h, while it is 190 km/h for "T" tyres and 210 km/h for "H" tyres. The highway code speed limits must however always be complied with.

SNOW CHAINS

The use of snow chains should be in compliance with local regulations.

Snow chains can be fitted to the tyres of the front wheels (drive wheels) only.

Check the tension of the snow chains after the first few metres have been driven.

IMPORTANT Snow chains cannot be fitted to the space-saver wheel (for versions/markets, where provided). If a front tyre is punctured, replace a rear wheel with the space-saver wheel and move the rear wheel to the front axle. In this way, with two normal drive wheels at the front, snow chains can be fitted.

Keep your speed down when snow chains are fitted; do not exceed 50 km/h. Avoid potholes, steps and pavements and avoid driving for long distances on roads not covered with snow to prevent damaging the car and the road surface.

STORING THE CAR

If the car is to be left inactive for longer than a month, the following precautions should be taken:

- ❒ park the car in covered, dry and if possible well-ventilated premises and slightly open the windows;
- ❒ engage a gear and check that the handbrake is not engaged;
- ❒ disconnect the negative battery terminal (for versions with Start&Stop system refer to the paragraph "Start&Stop system" in the chapter "Knowing your car"); If the battery is not disconnected from the electrical system, check its charge every thirty days;
- ❒ clean and protect the painted parts using protective wax;
- ❒ clean and protect the shiny metal parts using special compounds available commercially;
- ❒ sprinkle talcum powder on the windscreen and rear window wiper rubber blades and lift them off the glass;
- ❒ cover the car with a cloth or perforated plastic sheet. Do not use sheets of non-perforated plastic as they do not allow moisture on the car body to evaporate;
- ❒ inflate tyres to +0.5 bar above the standard specified pressure and check it at intervals;
- ❒ do not drain the engine cooling system.

GETTING TO KNOW YOUR CAR
SAFETY
STARTING AND DRIVING
WARNING LIGHTS AND MESSAGES
IN AN EMERGENCY
SERVICING AND MAINTENANCE
TECHNICAL SPECIFICATIONS
INDEX

WARNING LIGHTS AND MESSAGES

GENERAL WARNINGS

Warning lights are accompanied by a specific message and/or acoustic warning where provided by the control panel. These indications are **concise and precautionary** and, as such, must not be considered as exhaustive and/or an alternative to the information contained in this Owner Handbook, which you are advised to read carefully in all cases. In the event of a failure indication, **always refer to the contents of this section**.

IMPORTANT Failure indications displayed are divided into two categories: **very serious** and **less serious** failures.

Very serious failures are indicated by a repeated and prolonged warning "cycle".

Less serious failures are indicated by a shorter warning "cycle".

The display cycle of both categories can be interrupted by pressing the SET button. The instrument panel warning light will stay on until the cause of the malfunction is eliminated.

BRAKE FLUID LOW (red) / HANDBRAKE ENGAGED (red)

Turning the key to MAR switches on the warning light, but it should switch off after a few seconds.

LOW BRAKE FLUID LEVEL

The warning light switches on when the level of the brake fluid in the reservoir falls below the minimum level due to a possible leak in the circuit. On some versions the display shows the dedicated message.

WARNING

If the (!) warning light switches on while driving, stop immediately and contact a Fiat Dealership.

HANDBRAKE ENGAGED

When the key is turned to MAR, the warning light switches on but should switch off after a few seconds.

The warning light (or symbol on the display) switches on when the handbrake is engaged. If the car is in motion, there will also be an acoustic warning.

IMPORTANT If the warning light comes on when the vehicle is in motion, check that the handbrake is not engaged.

EBD FAILURE (red) (amber)

The simultaneous switching on of the (red), (amber) and (amber) warning lights with the engine on, indicates either a failure of the EBD system or that the system is not available. In this case, the rear wheels may suddenly lock and the vehicle may swerve when braking sharply. Drive very carefully to the nearest Fiat Dealership to have the system inspected immediately. On some versions the display shows the dedicated message.

ABS FAILURE (amber)

Turning the key to MAR switches on the warning light, but it should switch off after a few seconds. The warning light switches on (on some versions, with a message on the display and a symbol on the display) when the system is not efficient. In this case the braking system maintains its own efficiency unaltered but without the advantage of the ABS system. Drive carefully and contact a Fiat Dealership as soon as possible.

AIRBAG FAILURE (red)

Turning the key to MAR switches on the warning light, but it should switch off after a few seconds. The warning light switches on constantly (on some versions, with a message on the display and a symbol on the display) to indicate an airbag system fault.

WARNING

If, when turning the key to MAR, the warning light does not switch on or stays on whilst driving, a fault may be present in the restraint systems. In this case the airbags or pretensioners may not be deployed in an impact or, in a lower number of cases, they may be deployed accidentally. Before continuing, contact a Fiat Dealership immediately to have the system checked.

WARNING

A fault with the warning light is indicated by flashing of the warning light, which signals the deactivation of the passenger side front airbag. In addition, the airbag system automatically disables the airbags on the passenger's side (front and side bags - for versions/markets, where provided). In this case, the warning light may not indicate faults in the restraint systems. Before continuing, contact a Fiat Dealership immediately to have the system checked.

PASSENGER/SIDE AIRBAGS DEACTIVATED (amber)

(for versions/markets, where provided)

The warning light switches on when the front passenger's airbag and side bag are disabled. With front passenger airbag on, when the ignition key is turned to MAR, the warning light switches on constantly for several seconds, it flashes for another few seconds and then it should switch off.

WARNING

A failure of the warning light is indicated by warning light switching on. In addition, the airbag system automatically disables the airbags on the passenger's side (front and side bags where provided). Before continuing, contact a Fiat Dealership immediately to have the system checked.

SEAT BELTS NOT FASTENED (red)

(for versions/markets, where provided)

The warning light switches on constantly with the car stationary and the driver's side or passenger side seat belt (when the passenger is present) not fastened. The warning light will flash and a buzzer will sound if the car is in motion and the front seat belts are not correctly fastened.

Contact a Fiat Dealership if you wish to permanently deactivate the SBR (Seat Belt Reminder) system buzzer. The system can be reactivated using the Setup menu (see the description in the "Knowing your car" section).

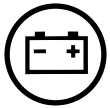

LOW BATTERY CHARGE (red)

(for versions/markets, where provided)

When the ignition key is turned to MAR, the warning light switches on but should switch off as soon as the engine is started (with the engine idling, a brief delay is acceptable).

If the warning light (or, on some versions, a message and a symbol on the display) remains on constantly or flashing, contact a Fiat Dealership.

ON CONSTANTLY: LOW ENGINE OIL PRESSURE (red)

ON FLASHING: ENGINE OIL DETERIORATED

(only Diesel versions with DPF - red)

When the ignition key is turned to MAR, the warning light switches on but should switch off as soon as the engine is started.

1. Low engine oil pressure

The warning light switches on constantly together (for versions/markets, where provided) with a message on the display when the system detects that the engine oil pressure is too low.

WARNING

If the warning light switches on when driving (on certain versions together with the message on the display) stop the engine immediately and contact a Fiat Dealership.

2. Engine oil deteriorated

(only Diesel versions with DPF)

The warning light will flash and a specific message will appear on the display (in versions/markets, where provided). The warning light flashes for 3 minute cycles with the warning light off for intervals of 5 seconds until oil is changed.

After the first indication, at each engine start-up the warning light will continue flashing as described above until the oil is changed. The display shows a dedicated message (for versions/markets, where provided) together with the warning light.

The flashing of this warning light should not be considered as a fault; it informs the customer that the oil needs to be changed following normal car use.

Remember that the deterioration of the engine oil is accelerated by:

❒ mainly town use of the car which makes the DPF regeneration process more frequent;

❒ use of the car for short drives, in which the engine does not have time to reach its regular operating temperature;

❒ repeated interruption of the regeneration process, signalled by the DPF warning light switching on.

WARNING

If the warning light switches on, the deteriorated engine oil must be changed as soon as possible, and never more than 500 km from the first time that the warning light switches on. Failure to observe the above may result in severe damage to the engine and invalidate the warranty. Remember that the operation of this warning light is not related to the amount of oil in the engine. Therefore, never top up with oil when the light starts flashing.

EXCESSIVE ENGINE COOLANT TEMPERATURE (red)

Turning the key to MAR switches on the warning light, but it should switch off after a few seconds. The warning light switches on (on some versions, with a message on the display and a symbol on the display) when the engine is overheated.

If the warning light comes on when driving, proceed as follows:

❒ **when driving normally:** stop the car, stop the engine and check that the water level in the reservoir is not below the MIN mark. If it is, wait for a few minutes for the engine to cool down then slowly and carefully open the cap, top up with coolant and check that the level is between the MIN and MAX marks. Also check visually for any fluid leaks. If, when restarting, the warning light should switch on again, contact a Fiat Dealership;

❒ **if the car is used under demanding conditions** (e.g. towing trailers uphill or fully loaded): slow down and, if the light stays on, stop the car. Wait for 2 or 3 minutes with the engine running and slightly accelerated to further favour the coolant circulation. Then stop the engine. Check the correct liquid level as described above.

IMPORTANT On demanding routes, it is advisable to keep the engine on and slightly accelerated for a few minutes before stopping it.

FUEL RESERVE - LIMITED RANGE (amber)

This warning light comes on when about 5 to 7 litres of fuel are left in the tank. When the remaining range is lower than approx. 50 km (or equivalent value in miles), on some versions, the display will show a warning message.

IMPORTANT The warning light will flash to indicate a system failure. If this is the case, go to a Fiat Dealership to have the system checked.

EOBD/INJECTION SYSTEM FAILURE (amber)

In normal conditions, the warning light switches on when the key is turned to MAR (on some versions, with a message on the display), but should switch off as soon as the engine is started.

If the warning light remains on or switches on whilst driving, the injection system is not working properly; in particular, if the warning light switches on constantly, this indicates a malfunction in the supply/ignition system that could cause excessive exhaust emissions, a possible loss of performance, poor driveability and high fuel consumption.

In these conditions, you can continue driving without demanding excessive effort or speed from the engine. Prolonged use of the car with the warning light on may cause damage: contact a Fiat Dealership as soon as possible.

The warning light switches off after the malfunction disappears, but the notification is stored in the system.

NOTE (valid only for petrol engines)

If the warning light flashes, the catalytic converter may be damaged.

In this case, it is necessary to release the accelerator pedal to lower the speed of the engine until the warning light stops flashing; continue the journey at moderate speed, trying to avoid driving conditions that may cause further flashing and contact a Fiat Dealership as soon as possible.

Contact a Fiat Dealership as soon as possible if the warning light either does not switch on when the key is turned to MAR or if while driving the warning light switches on either constantly or flashing (along with a message and a symbol on the display on some versions). Operation of the warning light may be verified by traffic control officers using appropriate equipment. Comply with the laws and regulations of the country where you are driving.

ESC SYSTEM FAILURE (amber)

(for versions/markets, where provided)

This warning light switches on when the ignition key is turned to MAR, but it should switch off after a few seconds. If the warning light does not switch off or stays on (along with a message on the display on some versions) whilst driving, contact a Fiat Dealership. Flashing of the warning light while driving indicates the intervention of the ESC system.

Hill Holder failure

This warning light switches on, on some versions together with a message in the display, in the event of a Hill Holder system fault. In this case, contact a Fiat Dealership.

FIAT CODE SYSTEM FAILURE (amber)

The warning light (or symbol on the display) switches on (along with a message on the display on some versions) to indicate a Fiat CODE system failure: in this case contact a Fiat Dealership as soon as possible.

PLUG PREHEATING/PLUG PREHEATING FAILURE (diesel versions) (amber)

PLUG PREHEATING

The warning light switches on when the key is turned to MAR and switches off when the plugs have reached the preset temperature. The engine can be started as soon as the warning light switches off.

IMPORTANT At moderate or high ambient temperatures the warning light may stay on for an extremely short time.

PLUG PREHEATING FAILURE

The warning light flashes (together with a message and a symbol on the display on some versions) to indicate a fault in the plug preheating system. Contact a Fiat Dealership to have the fault fixed as soon as possible.

"DUALDRIVE" ELECTRIC POWER STEERING FAILURE (red)

This warning light switches on when the key is turned to MAR, but it should switch off after a few seconds. If the warning light (or, on some versions, a message and a symbol on the display) stays on, you may not have steering assistance and the effort required to operate the steering wheel could be notably increased; steering is, however, possible. In this case, contact a Fiat Dealership.

IMPORTANT In some circumstances, factors independent of the electric power steering could cause the warning light on the instrument panel to switch on. In this case, stop the car immediately (should it be in motion), stop the engine for about 20 seconds and then restart the engine. If the warning light (or, on some versions, a message and a symbol on the display) stays on, contact a Fiat Dealership.

IMPORTANT After the battery is disconnected, the steering must be initialised. The warning light switches on to indicate this. To carry out this procedure, simply turn the steering wheel all the way from one end to the other or drive in a straight line for about a hundred metres.

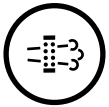

DPF (PARTICULATE FILTER) CLEANING IN PROGRESS

(only diesel versions with DPF) (amber)

This warning light switches on when the ignition key is turned to MAR, but it should switch off after a few seconds. The warning light (together with a message and a symbol on the display on some versions) switches on constantly to notify the driver that the DPF system needs to eliminate captured pollutants (particulate) through the regeneration process.

The warning light does not switch on during every DPF regeneration, but only when driving conditions require that the driver is notified. To switch the warning light off, the car must be kept in motion until the regeneration process is completed.

On average, the process lasts fifteen minutes. Optimal conditions for completing the process are achieved by travelling at 60 km/h with engine revs above 2000 rpm.

If this light switches on, it does not mean that the car is defective, so there is no need to take it to a garage. A specific message will appear on the display when the warning light comes on (for versions/markets, where provided).

WARNING

The driving speed must always be suitable for traffic and weather conditions and the driver must always comply with the Highway Code. The engine can be stopped even if the DPF warning light is on; however, repeated interruptions of the regeneration process could cause premature deterioration of the engine oil. For this reason, always wait until the warning light switches off before stopping the engine as described above. It is not advisable to complete DPF regeneration with the car stationary.

GENERIC FAILURE INDICATION (amber)

(for versions/markets, where provided)

The warning light switches on in the following circumstances. In these cases contact a Fiat Dealership to have the fault eliminated as soon as possible.

Speed limit exceeded
(for versions/markets, where provided)

The warning light switches on (together with a message on the display) when the speed limit set in the Setup Menu is exceeded.

When the car exceeds this value, on some versions a message and a symbol are shown in the display and an acoustic signal is emitted.

Fuel cut-off system intervention/fault

The warning light switches on (together with a message on the display) in the event of fuel cut-off system intervention/fault.

Start&Stop system fault
(for versions/markets, where provided)

The warning light switches on (together with a message on the display) when a Start&Stop system failure is detected.

In the event of a Start&Stop system failure, contact a Fiat Dealership.

Temporary or permanent City Brake Control - "Collision Mitigation" system failure
(for versions/markets, where provided)

The warning light switches on (together with a message on the display) when a temporary or permanent City Brake Control - "Collision Mitigation" system failure is detected.

If the failure is permanent: contact a Fiat Dealership to have the system checked.

Parking sensor failure
(for versions/markets, where provided)

The warning light switches on (together with a message on the display) when a parking sensor fault is detected.

Exterior lights failure
(for versions/markets, where provided)

The warning light will come on when a fault to one of the following lights is detected:

❒ side lights;

❒ number plate lights;

❒ rear fog lights;

❒ direction indicators;

❒ daytime running lights (DRL).

Engine oil pressure sensor failure

(for versions/markets, where provided)

The engine oil pressure sensor failure is indicated by the activation of the warning light on the instrument panel.

Water in diesel filter (diesel versions)
(for versions/markets, where provided)

Turning the key to MAR switches on the warning light, but it should switch off after a few seconds.

The ⚠ warning light switches on when water is detected in the diesel filter.

A specific message is displayed on certain versions.

If the warning light ⚠ switches on (on some versions the warning light ⚠ is accompanied by the dedicated message on the display), contact a Fiat Dealership as soon as possible to have the system bled. If the above indication occurs immediately after refuelling, water may have entered the tank: stop the engine immediately and contact a Fiat Dealership.

REAR FOG LIGHT (amber)

The warning light switches on when the rear fog lights are activated.

FOG LIGHTS (green)

The warning light switches on when the fog lights are activated.

SIDE LIGHTS AND DIPPED HEADLIGHTS (green)/FOLLOW ME HOME (green)

SIDE LIGHTS AND DIPPED HEADLIGHTS

The warning light switches on when side lights or dipped headlights are activated.

FOLLOW ME HOME

This warning light switches on (on some versions together with a message and a symbol in the display) when this device is used (see the "Follow me home" paragraph in the "Knowing your car" section).

MAIN BEAM HEADLIGHTS (blue)

The warning light switches on when the main beam headlights are activated.

LEFT DIRECTION INDICATOR (green) (intermittent)

The warning light switches on when the direction indicator control stalk is moved downwards or, together with the right indicator, when the hazard warning light button is pressed.

RIGHT DIRECTION INDICATOR (green) (intermittent)

The warning light switches on when the direction indicator control stalk is moved upwards or, together with the left indicator, when the hazard warning light button is pressed.

DOORS/BONNET/LUGGAGE COMPARTMENT OPEN

The warning light switches on (on some versions together with a message and a symbol in the display) when one or more doors, the bonnet or the tailgate are not properly closed. An acoustic signal is emitted with the doors open and the car in motion.

City Brake Control - "Collision Mitigation" SYSTEM DEACTIVATED (amber)

(for versions/markets, where provided)

The warning light switches on when the City Brake Control - "Collision Mitigation" system is deactivated through the setup menu.

START&STOP SYSTEM ACTIVATION/ DEACTIVATION

(for versions/markets, where provided)

Start&Stop system activation

Start&Stop system activation is signalled by a message on the display. In this condition the LED on the button on the control panel (see “Start&Stop” in the "Knowing your car" section) is off.

Start&Stop system deactivation

Start&Stop system deactivation is signalled by a message on the display.

The LED on the button switches on when the system is deactivated.

SERVICE (SCHEDULED SERVICING) EXPIRED

When the next scheduled service is approaching and the key is turned to MAR-ON, the word “Service” appears on the display, followed by the number of kilometres or miles left. Go to a Fiat Dealership, where the "Scheduled Servicing Plan" operations will be performed and the message will be reset.

In an emergency we recommend that you call the free-phone number found on the Warranty Booklet. You can also go to the www.fiat.com website to find your nearest Fiat Dealership.

STARTING THE ENGINE

Contact to a Fiat Dealership immediately if instrument panel warning light comes on constantly.

JUMP STARTING

If the battery is flat, the engine may be started using an auxiliary battery with the same capacity or a little higher than the flat one.

To start the vehicle, proceed as follows:

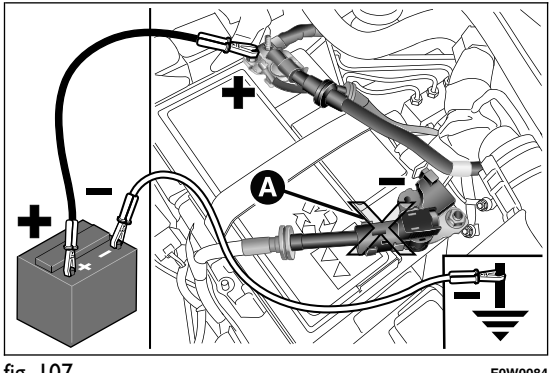

fig. 107 F0W0084

- ❒ connect the positive terminals (sign + near the terminal) of the two batteries with a jump lead fig. 107;
- ❒ with a second lead, connect the negative terminal – of the auxiliary battery to an earthing point ⏚ on the engine or the gearbox of the car to be started;
- ❒ start the engine;
- ❒ when the engine has been started, remove the leads reversing the order above.

For versions with Start&Stop system, in case of starting by auxiliary battery, refer to the paragraph "Start&Stop system" in the chapter "Getting to know your car".

If after a few attempts the engine does not start, do not persist but contact a Fiat Dealership.

IMPORTANT Do not directly connect the negative terminals of the two batteries: sparks could ignite explosive gas released from the battery. If the auxiliary battery is installed on another car, prevent accidental contact between metallic parts of the two cars.

GETTING TO KNOW YOUR CAR
SAFETY
STARTING AND DRIVING
WARNING LIGHTS AND MESSAGES
IN AN EMERGENCY
SERVICING AND MAINTENANCE
TECHNICAL SPECIFICATIONS
INDEX

Never use a fast battery-charger to start the engine as this could damage the electronic systems of your car, particularly the ignition and fuel supply control units.

WARNING

This procedure must be performed by expert personnel because incorrect actions could cause electrical discharge of considerable intensity. Furthermore, battery fluid is poisonous and corrosive: avoid contact with skin and eyes. Keep naked flames and lighted cigarettes away from the battery and do not cause sparks.

BUMP STARTING

Never bump start the engine by pushing, towing or coasting downhill.

IMPORTANT Remember that the brake servo and electrical power steering system are not active until the engine is started. A much greater effort will therefore be required to use the brake pedal or turn the steering wheel.

CHANGING A WHEEL

GENERAL INSTRUCTIONS

The car is equipped with the “FIX&GO Automatic Kit”: see the paragraph “FIX&GO Automatic Kit” for how to use this device. As an alternative to the “FIX&GO Automatic Kit” the car may be equipped with a space-saver wheel: see the instructions on the following pages for changing the tyre.

WARNING

The space-saver wheel (for versions/ markets where provided) is specific to your car, do not use it on other models, or use the space-saver wheel of other models on your car. The space-saver wheel must only be used in case of emergency. It must only be used for the distance necessary to reach a service point and the car speed must not exceed 80 km/h. The space-saver wheel has an orange sticker that summarises the main cautions for use and limitations. Never remove or cover the label. The following information is provided in four languages on the label: "Important! For temporary use only! 80 km/h max! Replace with a standard tire as soon as possible. Never cover this indication." Never apply a wheel cap on a space-saver wheel.

WARNING

Alert other drivers that the car is stationary in compliance with local regulations: hazard warning lights, warning triangle, etc. Any passengers on board should leave the car, especially if it is heavily laden. Passengers should stay away from on-coming traffic while the wheel is being changed. On hills or uneven roads, use chocks or appropriate objects to block the wheels of the vehicle.

WARNING

The vehicle's driving characteristics will be modified with the space-saver wheel fitted. Avoid violent acceleration and braking, abrupt steering and fast cornering. The overall duration of the space-saver spare wheel is of about 3000 km, after which the relevant tyre must be replaced with another one of the same type. Never install a traditional tyre on a rim designed to be used as a small spare wheel. Have the wheel repaired and refitted as soon as possible. Using two or more small spare wheels at the same time is forbidden. Do not apply grease to the bolt threads before fitting: they could unscrew themselves.

WARNING

The jack may be used to replace wheels only on the car that it comes with or other cars of the same model. Never use the jack for other purposes, such as lifting other car models. Never use it for repair operations under the car. Incorrectly positioning the jack may cause the car to fall. Do not use the jack for loads higher than those shown on the label. Never install snow chains on the space-saver spare wheel; if a front tyre (driving wheel) is punctured and you need to use snow chains, use a standard wheel from the rear axle and install the space-saver spare wheel on the rear axle. In this way, with two normal front drive wheels, it is possible to use snow chains.

WARNING

If the hub cap is not fitted correctly, it may come off when the car is travelling. Never tamper with the inflation valve. Never introduce tools of any kind between rim and tyre. Check tyre and space-saver wheel pressures regularly, complying with the values given in the "Technical specifications" chapter.

JACK

Important notes:

❒ the jack weight is 1.76 kg;

❒ the jack requires no adjustment;

❒ the jack cannot be repaired and in the event of a fault it must be replaced by another original one;

❒ no tool other than its cranking device may be fitted on the jack.

To change a wheel proceed as follows:

❒ stop the car in a position that is not dangerous for oncoming traffic where you can change the wheel safely. The ground must be flat and sufficiently compact;

❒ switch off the engine, pull up the handbrake and engage the 1st gear or the reverse gear. Wear the reflective safety jacket (compulsory by law in certain countries) before getting out of the car;

❒ open the luggage compartment, pull tab A fig. 108 and lift up the mat;

❒ using the wrench A fig. 109 located in the tool box, loosen the locking device, take the tool box B and place it close to the wheel to be replaced. Then take the space-saver wheel C;

❒ take the wrench A fig. 110 and loosen the fixing bolts by about one turn;

❒ position the jack under the car, near the wheel to be changed;

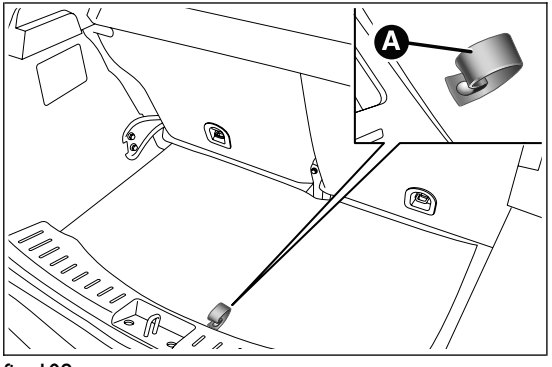

fig. 108 F0W0325

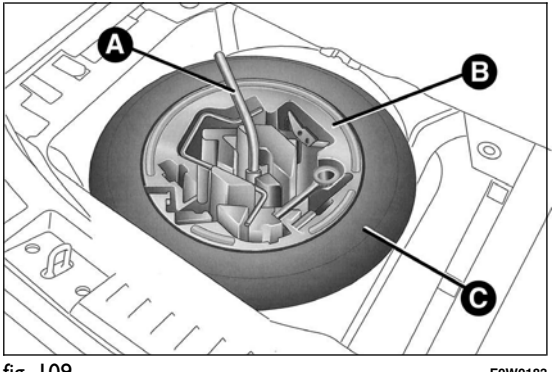

fig. 109 F0W0183

- ❒ operate the device A fig. 111 to extend the jack until the top of the jack B fig. 112 fits correctly into the side member C (next to the mark ▽ on the side member);
- ❒ alert other passengers that the car is about to be raised; all persons should be kept away from the car until it has been lowered;
- ❒ fit handle D fig. 111 into the housing in device A, operate the jack and raise the car until the wheel is a few centimetres from the ground;
- ❒ remove the wheel cap after loosening the 3 fixing bolts and finally loosen the fourth bolt and extract the wheel (only for versions with wheel caps fixed by bolts);
- ❒ make sure the contact surfaces between space-saver wheel and hub are clean so that the fastening bolts will not come loose;
- ❒ fit the space-saver wheel by inserting the first bolt for two threads into the hole closest to the valve;

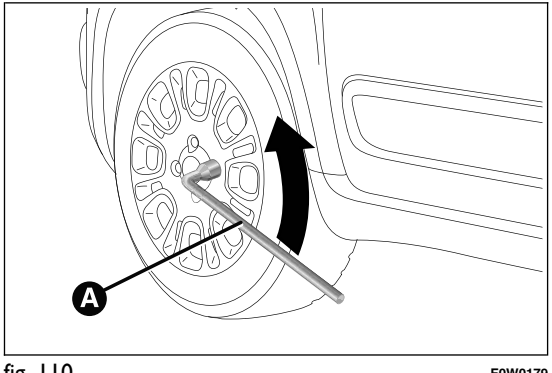

fig. 110 F0W0179

- ❒ take the wrench A fig. 110 and fully tighten the fixing bolts;
- ❒ operate the jack handle D to lower the car. Then extract the jack;

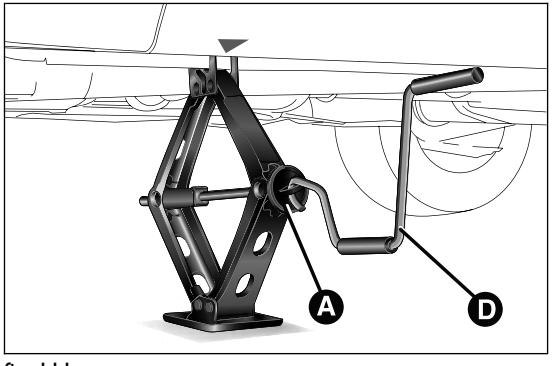

fig. 111 F0W0025

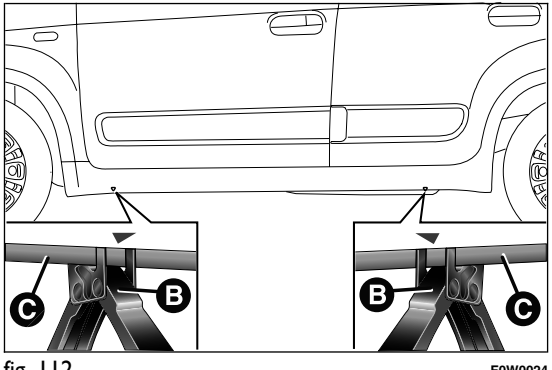

fig. 112 F0W0024

❒ use the wrench A provided to fully tighten the bolts in a criss-cross fashion as per the numerical sequence illustrated in fig. 113;

❒ when replacing an alloy wheel it is advisable to place it upside down, with the aesthetic part facing upwards.

Restore the standard wheel as soon as possible, because, once placed in the associated compartment, the luggage compartment load platform is rendered uneven as the standard wheel is larger than the space-saver wheel.

REFITTING THE STANDARD WHEEL

Following the procedure described previously, raise the car and remove the space-saver wheel.

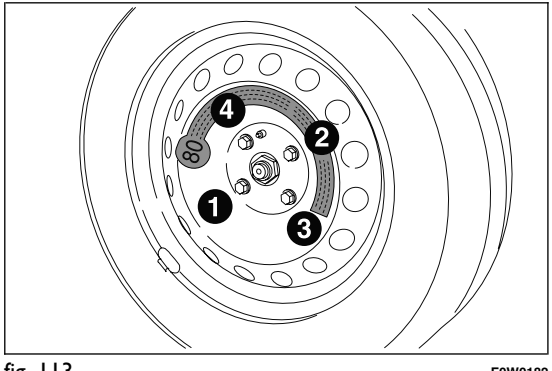

fig. 113 F0W0182

Versions with steel rims

Proceed as follows:

❒ make sure the contact surfaces between standard wheel and hub are clean so that the fastening bolts will not come loose;

❒ fit the standard wheel by inserting the first bolt by 2 threads into the hole closest to the inflation valve;

❒ fit the hub cap, aligning the crescent hole with the bolt already fitted, then fit the other bolts;

❒ using the wrench provided, tighten the fastening bolts;

❒ lower the car and remove the jack;

❒ using the wrench provided, fully tighten the bolts in the sequence shown previously.

Versions with alloy wheels

❒ insert the wheel on the hub and using the wrench provided tighten the bolts;

❒ lower the car and remove the jack;

❒ using the wrench provided, fully tighten the bolts in the sequence shown;

❒ reinstall the pressure-fitted hub cap, making sure that the reference hole on the wheel is aligned with the reference hole on the cap.

IMPORTANT If it is not fitted properly, the hub cap may detach itself when the vehicle is running.

At the end of operation

❒ stow the space-saver wheel in the compartment provided in the luggage compartment;

❒ insert the jack and the other tools in the container;

❒ arrange the container and tools on the space-saver wheel;

❒ correctly reposition the boot mat.

"FIX&GO automatic" KIT

It is located in a special container in the luggage compartment fig. 114. The container also contains a screwdriver and the tow hook.

The kit fig. 114 contains:

❒ bottle A containing sealant and fitted with:

❒ filling pipe B;

❒ sticker C bearing the notice “max. 80 km/h”, to be placed in a position visible to the driver (on the instrument panel) after fixing the tyre;

❒ a compressor D including a pressure gauge and connections, found in the compartment;

❒ instruction brochure (see fig. 116), to be used for prompt and correct use of the quick tyre repair kit and then to be handed to the personnel charged with handling the treated tyre;

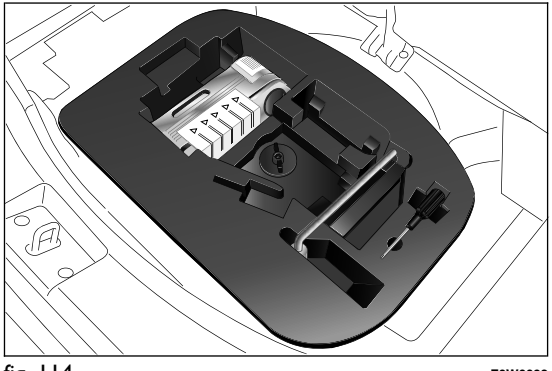

fig. 114 F0W0093

- ❒ a pair of protective gloves located in the side compartment of the compressor;
- ❒ adapters for inflating different elements.

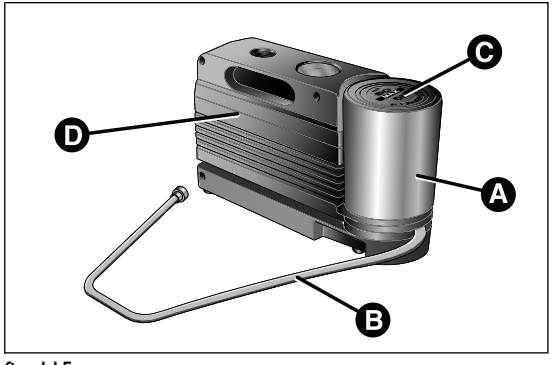

fig. 115 F0W0006

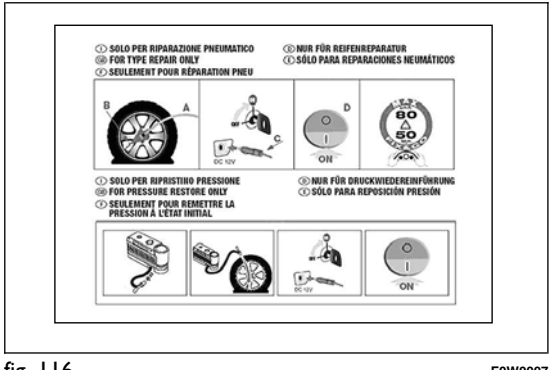

fig. 116 F0W0007

WARNING

Give the instruction brochure to the personnel charged with handling the tyre treated with the quick tyre repair kit.

In the event of a puncture caused by foreign bodies, the kit may be used to repair tyres showing damages on the track or shoulder up to max. 4 mm diameter.

WARNING

Punctures on the sides of the tire may not be repaired. Do not use the quick tyre repair kit if the tyre is damaged as a result of driving with it deflated.

WARNING

Repairs are not possible in the case of damage to the wheel rim (bad groove distortion causing air loss). Do not remove foreign bodies (screws or nails) from the tyre.

WARNING

Never operate the compressor for longer than 20 consecutive minutes. Risk of overheating. Tyres repaired with the quick tyre repair kit must only be used temporarily, as the kit is not suitable for a definitive repair.

WARNING

The cylinder contains ethyl glycol. Contains latex: may cause an allergic reaction. Harmful if swallowed. Eye irritant. May cause irritation if inhaled or on contact. Avoid contact with eyes, skin and clothes. In the event of contact, wash immediately with plenty of water. If ingested, do not induce vomiting. Rinse out your mouth, drink large quantities of water and seek immediate medical attention. Keep away from children. The product must not be used by asthmatics. Do not inhale the vapours during insertion and suction. Call a doctor immediately if allergic reactions are noted. Store the canister in its proper compartment, away from sources of heat. The sealant fluid has an expiry date. Replace the bottle containing out-of-date sealant fluid.

Dispose of the bottle and the sealant liquid properly. Have the sealing fluid and the cylinder disposed of in compliance with national and local regulations.

INFLATION PROCEDURE

WARNING

Put on the protective gloves provided together with quick tyre repair kit.

Proceed as follows:

❒ **Pull up the handbrake.** Unscrew the tyre valve cap, take out the filler hose A fig. 117 and tighten the ring nut B on the tyre valve;

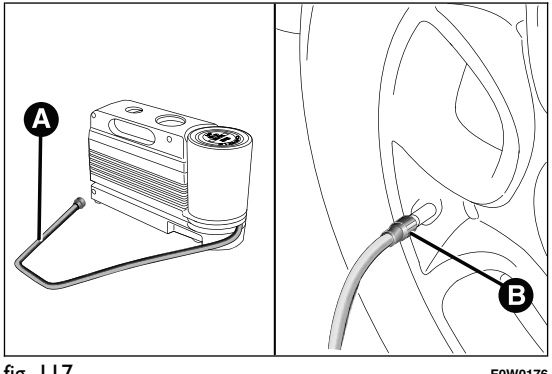

fig. 117 F0W0176

- make sure that the compressor switch A fig. 118 is in position 0 (off), start the engine, plug into the power socket in the central tunnel fig. 119 and operate the compressor turning switch A to position I (on). Inflate the tyre to the pressure specified in the "Inflation pressure" paragraph in the "Technical specifications" section. Check tyre pressure on gauge B fig. 118 with compressor off to obtain a more precise reading;
- if after five minutes it is still impossible to reach at least 1.8 bar, disengage the compressor from the valve and power socket, then move the car forwards by approx. ten metres in order to distribute the sealing fluid inside the tyre evenly, then repeat the inflation operation;
- if after this operation you still cannot reach at least 1.8 bar after 5 minutes from switching on the compressor, do not resume driving but contact a Fiat Dealership;

WARNING

Apply the adhesive label where it can be easily seen by the driver as a reminder that the tyre has been treated with the quick repair kit. Drive carefully, particularly on bends. Do not exceed 80 km/h. Do not accelerate or brake suddenly.

- after driving for about 10 minutes stop and check the tyre pressure again; **pull up the handbrake;** For the safety of the car when it is parked, follow the indication in the paragraph "When parked" in the chapter "Starting up and driving" .

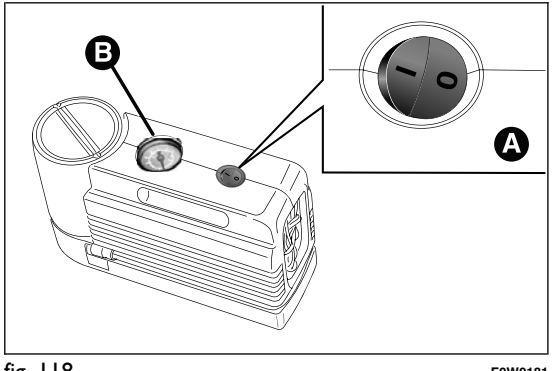

fig. 118 F0W0181

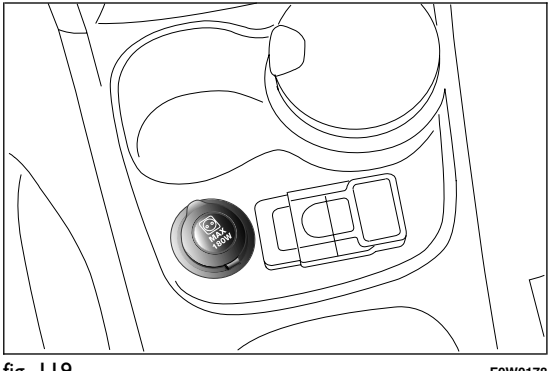

fig. 119 F0W0178

WARNING

If the pressure has fallen below 1.8 bar, do not drive any further: the quick tyre repair kit cannot guarantee the correct hold because the tyre is too damaged. Contact a Fiat Dealership.

❒ if a pressure value of at least 1.8 bar is detected, restore the correct pressure (with the engine running and the handbrake engaged), resume driving and drive with great care to the nearest Fiat Dealership.

WARNING

Always indicate that the tyre was repaired using the quick tyre repair kit. Give the instruction booklet to the personnel charged with handling the treated tyre.

CHECKING AND RESTORING TYRE PRESSURE

The compressor can also be used to check and if necessary top up the tyre pressure. Release quick connector A fig. 120 and connect it directly to the valve of the tyre to be inflated.

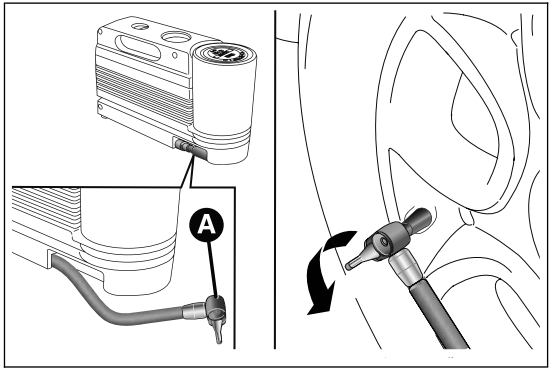

fig. 120 F0W0180

REPLACING THE BOTTLE

Proceed as follows:

❒ disconnect connection A fig. 121;

❒ turn the cylinder to be replaced anticlockwise and raise it;

❒ fit the new cylinder and turn it clockwise;

❒ connect connection A to the cylinder and insert the transparent pipe B into its housing.

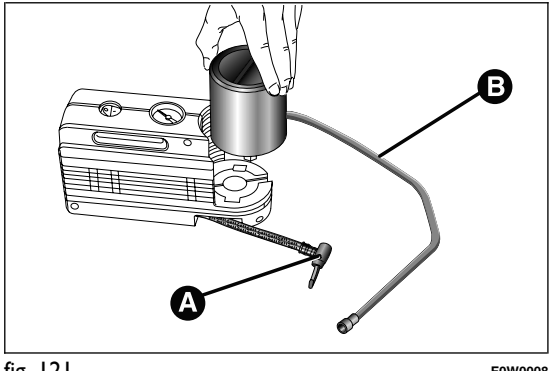

fig. 121 F0W0008

CHANGING A BULB

GENERAL INSTRUCTIONS

❒ Before changing a bulb check the contacts for oxidation;

❒ burnt bulbs must be replaced by others of the same type and power;

❒ after replacing a headlight bulb, always check its alignment;

❒ when a light is not working, check that the corresponding fuse is intact before changing a bulb. For the location of fuses, refer to the paragraph "If a fuse blows" in this section;

WARNING

Modifications or repairs to the electric system that are not carried out properly or do not take the system technical specifications into account can cause malfunctions leading to the risk of fire.

WARNING

Halogen bulbs contain pressurised gas, in the case of breakage they may burst causing glass fragments to be projected outwards.

Halogen bulbs must be handled holding the metal part only. Touching the transparent part of the bulb with your fingers may reduce the intensity of the emitted light and even reduce the lifespan of the bulb. In case of accidental contact, wipe the bulb with a cloth moistened with alcohol and let the bulb dry.

Where possible, it is advisable to have bulbs changed at a Fiat Dealership. The correct operation and direction of the external lights are absolutely essential for the safety of the car and of compliance with the law.

IMPORTANT When the weather is cold or damp or after heavy rain or washing, the surface of headlights or rear lights, may steam up and/or form drops of condensation on the inside. This is a natural phenomenon due to the difference in temperature and humidity between the inside and the outside of the glass which does not indicate a fault and does not compromise the normal operation of lighting devices. The mist disappears quickly when the lights are turned on, starting from the centre of the diffuser, extending progressively towards the edges.

TYPES OF BULBS

Various types of bulbs are fitted to your car:

All-glass bulbs: (type A) press-fitted. Pull to remove.

Bayonet type bulbs: (type B) to remove them press the bulb and turn it anticlockwise.

Tubular bulbs: (type C) release them from their contacts to remove.

Halogen bulbs: (type D) to remove the bulb, release the clip holding the bulb in place.

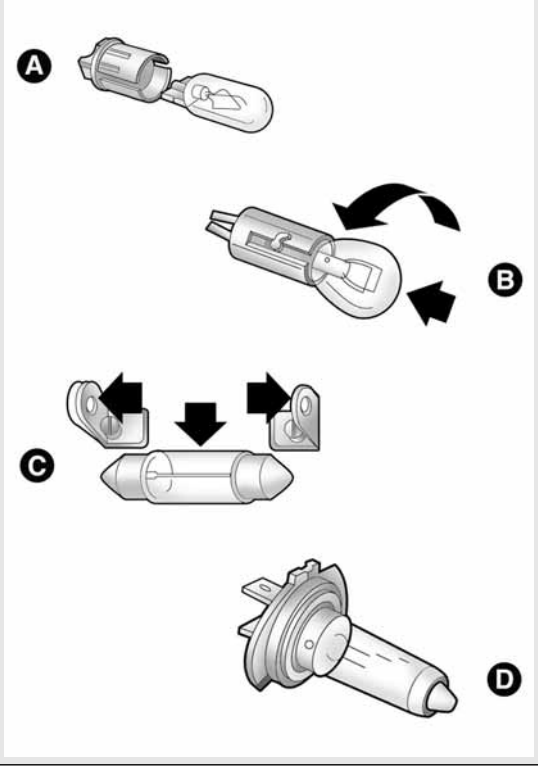

Bulbs

Use	Type	Power	Re. Figure
Dipped headlights\Main Beam Headlights	H4	55W	D
Front side lights/Day lights (DRL)	P21/5W	21W	B
Rear side lights	P21/5W	5W	B
Front direction indicators	PY21W	21W	B
Side direction indicators	W5W	5W	A
Rear direction indicators	PY21W	21W	B
Brake lights	P21/5W	21W	B
3rd brake light	LEDs	-	-
Fog lights	H11	55W	E
Reverse	W16W	16W	B
Rear fog lights	W16W	16W	B
Number plate	C5W	5W	C

REPLACING EXTERIOR BULBS

For the type of bulb and power rating, see “Changing a bulb".

FRONT LIGHT CLUSTERS

These contain the bulbs for the dipped beams, main beams and direction indicators. The bulbs are arranged as follows fig. 122:

A Main/dipped beam headlights

B Direction indicators

MAIN/DIPPED BEAM HEADLIGHTS

To change the bulb, proceed as follows:

❒ remove cover A fig. 122;

❒ push the connector + bulb holder unit B fig. 123 downwards;

❒ remove the bulb C from connector D and replace it;

❒ refit the new bulb on the connector making sure that it is locked correctly, then reinsert the connector unit and the bulb holder B in its housing;

❒ then refit the cover A fig. 122.

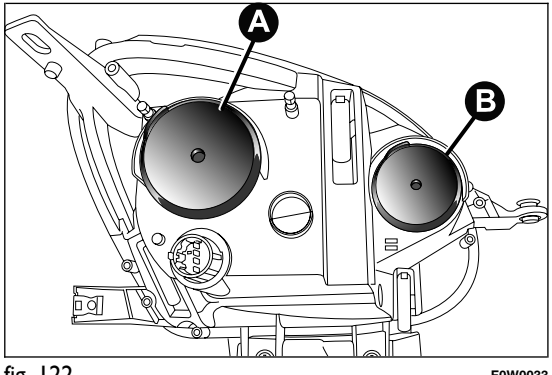

fig. 122 F0W0033

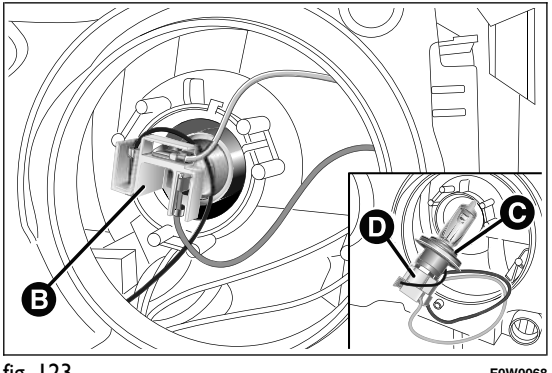

fig. 123 F0W0068

DIRECTION INDICATORS

Front

To change the bulb, proceed as follows:

❒ remove cover B fig. 122;

❒ turn the bulb holder anticlockwise, extract the bulb and replace it;

❒ refit the new bulb on the connector making sure that it is locked correctly, then reinsert the connector in its housing rotating it clockwise;

Side

To change the bulb, proceed as follows:

❒ adjust the lens A fig. 124 to compress in the internal catch B, then pull the unit outwards;

❒ turn the bulb holder C anticlockwise, extract the bulb and replace it;

❒ refit the bulb holder C in the lens and turn it clockwise;

❒ refit the unit making sure that the internal catch B clips into position.

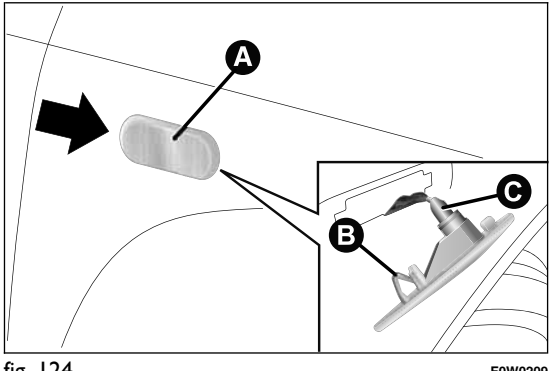

fig. 124 F0W0209

FOG LIGHTS
(for versions/markets, where provided)

Replace the bulb as follows:

❒ steer the wheel completely;

❒ adjust the screws A fig. 125 and remove the flap B;

❒ adjust the catch C fig. 126 and disconnect the electrical connector D;

❒ turn and remove the bulb holder E;

❒ release and replace the bulb;

❒ refit the new lamp and carry out the procedure described previously in reverse.

SIDE LIGHTS/DAY LIGHTS (DRL)
(for versions/markets, where provided)

Replace the bulb as follows:

❒ steer the wheel completely;

❒ adjust the screws A fig. 125 and remove the flap B;

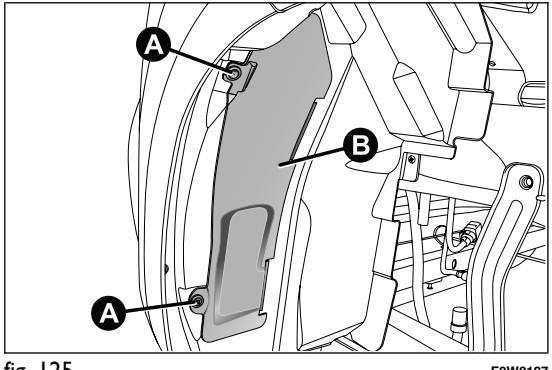

fig. 125 F0W0197

❒ adjust the catch C fig. 127 and disconnect the electrical connector D;

❒ turn and remove the bulb holder E;

❒ release and replace the bulb;

❒ refit the new lamp and carry out the procedure described previously in reverse.

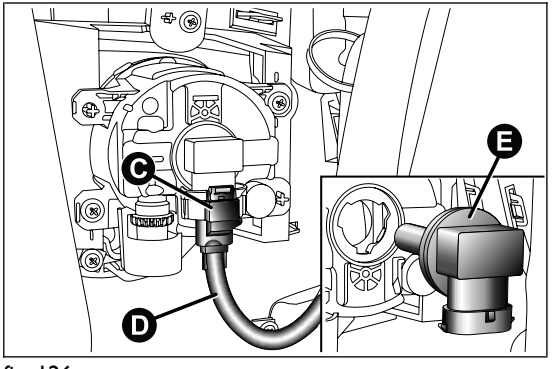

fig. 126 F0W0198

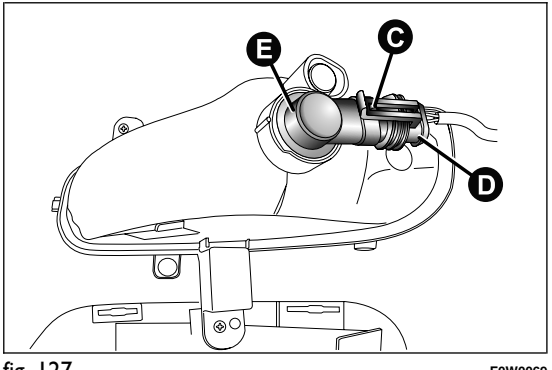

fig. 127 F0W0069

REAR LIGHT CLUSTERS

These contain the bulbs for the side lights, brake lights and direction indicators. The reversing lights and rear fog lights are located instead in the rear bumper.

To change the bulb proceed as follows:

- ❒ slacken the two screws fig. 128 from their seats, pull gently outwards until releasing the whole headlight from the two clips (press-fitted D fig. 128) and release the connector;
- ❒ undo the five screws B from their seats and remove the bulb holder C fig. 129;
- ❒ remove the bulbs, pushing them slightly and turning them anti-clockwise;
- ❒ refit the new lamp and carry out the procedure described previously in reverse.

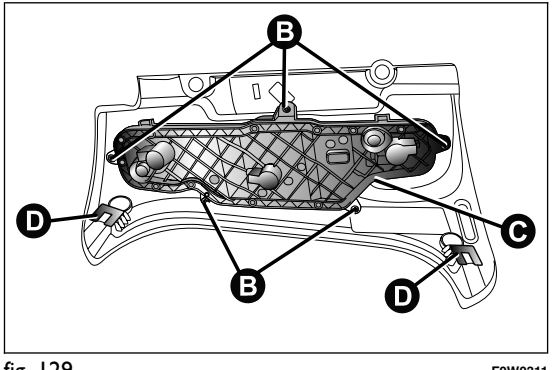

fig. 129 F0W0311

3rd BRAKE LIGHTS

These are located in the tailgate and are LED lights. For replacement, contact a Fiat Dealership.

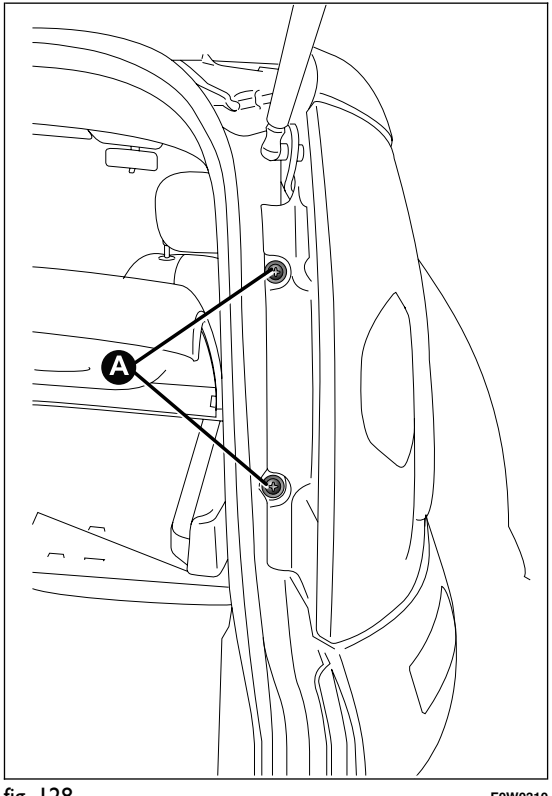

fig. 128 F0W0310

FOG LIGHT/REAR FOG LIGHT

To change the bulb, proceed as follows:

❒ adjust the tabs A and remove the flap B fig. 130;

❒ adjust the catch C and disconnect the electrical connector D fig. 131;

❒ turn and remove the bulb holder E;

❒ extract the bulb and replace it;

❒ refit the new lamp and carry out the procedure described previously in reverse.

WARNING

Before replacing the bulb, wait for the catalytic converter to cool down: RISK OF BURNS

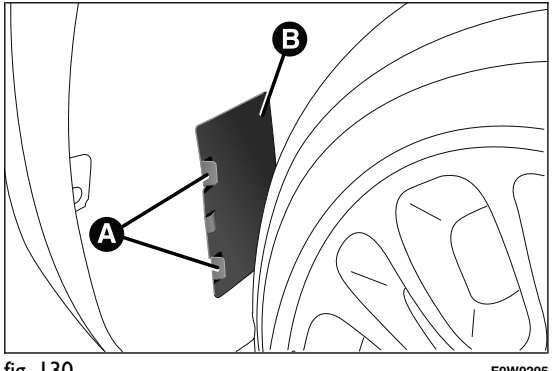

fig. 130 F0W0205

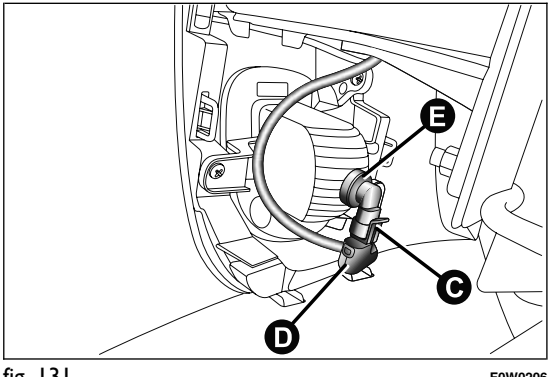

fig. 131 F0W0206

NUMBER PLATE LIGHTS

To replace the bulbs proceed as follows:

❒ remove lens A fig. 134;

❒ replace the bulb B fig. 133 releasing it from the side contacts;

❒ Insert the new bulb B and make sure that it is correctly clamped between the contacts;

❒ refit the lens A fig. 132.

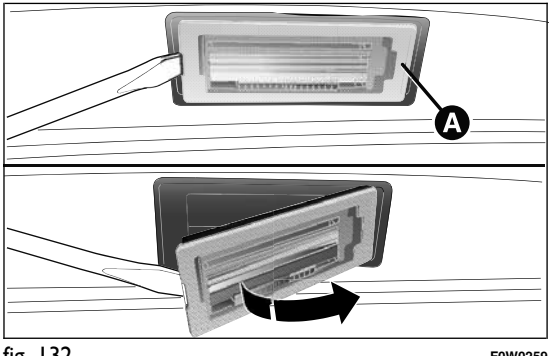

fig. 132 F0W0259

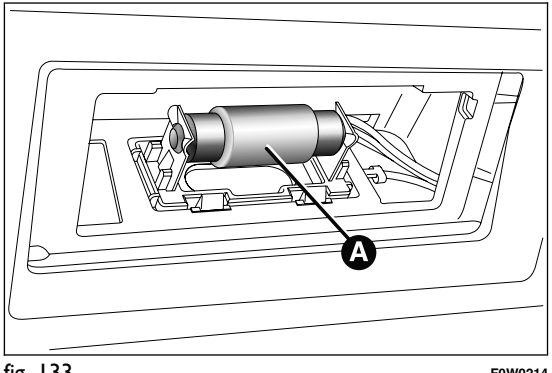

fig. 133 F0W0214

REPLACING INTERIOR BULBS

For the type of bulb and corresponding power rating, see the paragraph "Changing a bulb".

FRONT ROOF LIGHT

Versions with multi-bulb roof light

To change the bulbs, proceed as follows:

❒ remove the roof light A fig. 134 working at the points indicated by the arrows;

❒ open the flap B fig. 135 and replace the bulbs C releasing them from the side contacts. Make sure that the new bulbs are correctly secured between the contacts;

❒ reclose the flap B fig. 135 and fix the roof light A fig. 134 in its housing making sure that it is locked.

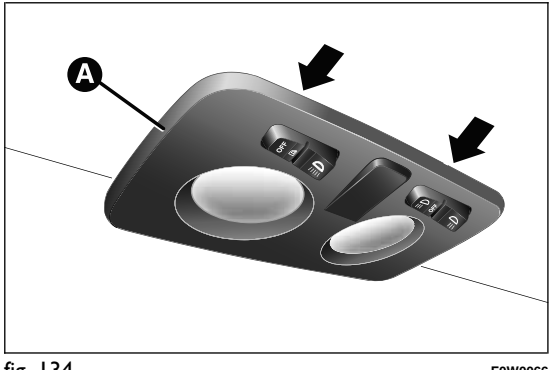

fig. 134 F0W0066

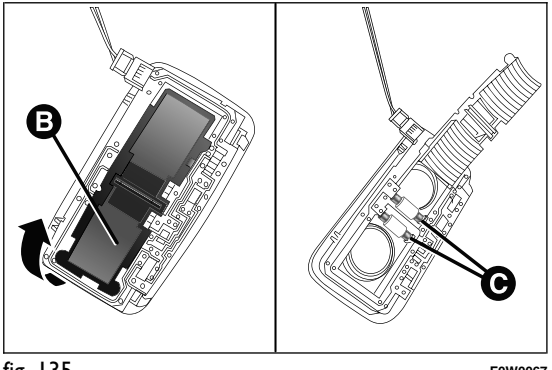

fig. 135 F0W0067

SINGLE-BULB INTERIOR ROOF LIGHTS

To change the bulbs, proceed as follows:

❒ operate in the point shown by the arrow and remove the roof light A fig. 138;

❒ open the flap C fig. 139 and replace the bulb B releasing it from the side contacts;

❒ Insert the new bulb B fig. 139 and make sure that it is correctly clamped between the contacts;

❒ reclose the flap C fig. 139 and fix the roof light A fig. 138 in its housing making sure that it is locked.

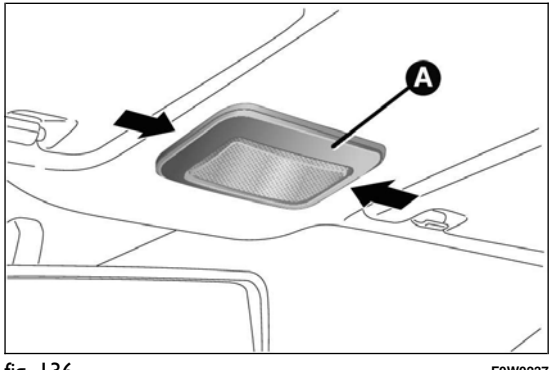

fig. 136 F0W0237

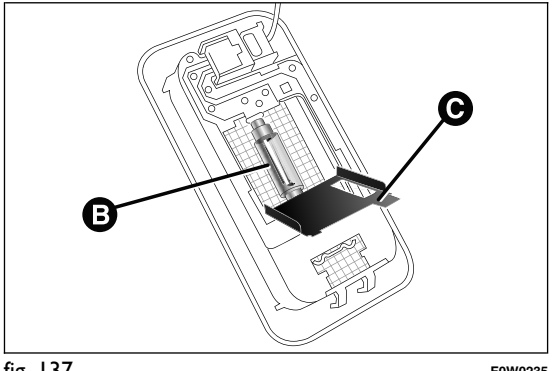

fig. 137 F0W0235

LUGGAGE COMPARTMENT ROOF LIGHT

To change the bulbs, proceed as follows:

❒ open the luggage compartment and extract the roof light A fig. 140 working in the point shown by the arrow;

❒ open the protection B and replace the bulb;

❒ re-close the protection B on the lens;

❒ refit the roof light A by inserting it in its correct position firstly on one side and then pressing on the other until it clicks into place.

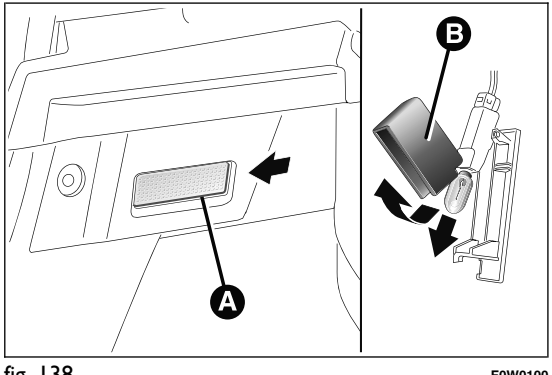

fig. 138 F0W0100

REPLACING FUSES

GENERAL INFORMATION

Fuses protect the electrical system: they intervene (blow) in the event of a failure or improper intervention on the system.

When a device does not work, check the condition of its protective fuse: the conductor element A fig. 141 must be intact. If it is not, replace the blown fuse with another with the same amperage (same colour).

B = intact fuse;

C = fuse with damaged filament.

To facilitate fuse replacement, use the pliers D hooked to the fuse box lid on the dashboard left-hand side.

Refer to the tables on the following pages to identify the protective fuse.

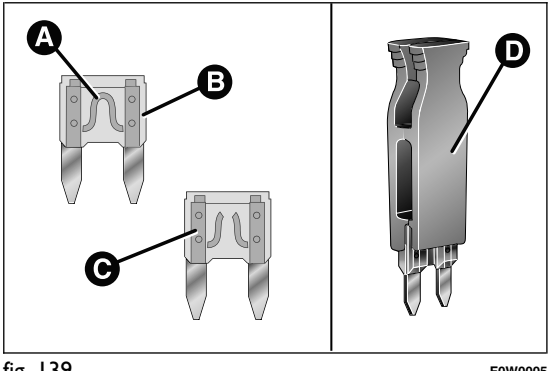

fig. 139 F0W0005

WARNING

If the replaced fuse blows again, contact a Fiat Dealership.

WARNING

Never replace a fuse with metal wires or anything else.

WARNING

Never replace a fuse with another with a higher amp rating; DANGER OF FIRE.

WARNING

If a general fuse (MEGA-FUSE, MIDI-FUSE, MAXI-FUSE) blows contact a Fiat Dealership.

WARNING

Before replacing a fuse, make sure that the ignition key has been removed and that all the other services are switched off and/or disengaged.

WARNING

If a general protection fuse for safety systems (air bag system, braking system), power unit systems (engine system, transmission system) or steering system is triggered, contact a Fiat Dealership.

FUSE LOCATION

Engine compartment fuse box

This is located next to the battery: to access fuses proceed as follows:

❒ undo the screw A fig. 142, remove the cover B fig. 142 pulling upwards. The number identifying the electrical component corresponding to each fuse is on the cover fig. 143. After replacing the fuse, make sure you close cover B on the fusebox.

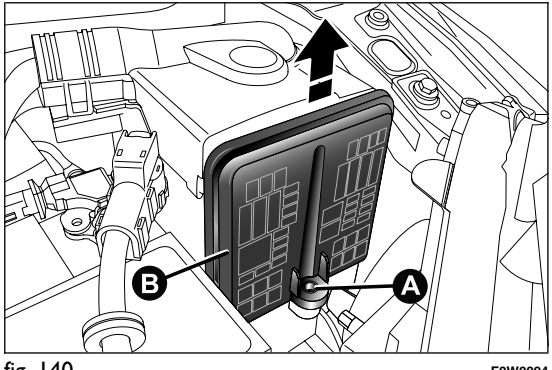

fig. 140 F0W0094

If you need to wash the engine compartment, take care not to directly hit the fuse box and the window wiper motors with the water jet.

fig. 141 F0W0210

Dashboard fuse box

The control unit is located near the left side of the steering column and the fuses can be accessed easily from the lower part of the dashboard. The fuses are located in the fuse box shown in fig. 144.

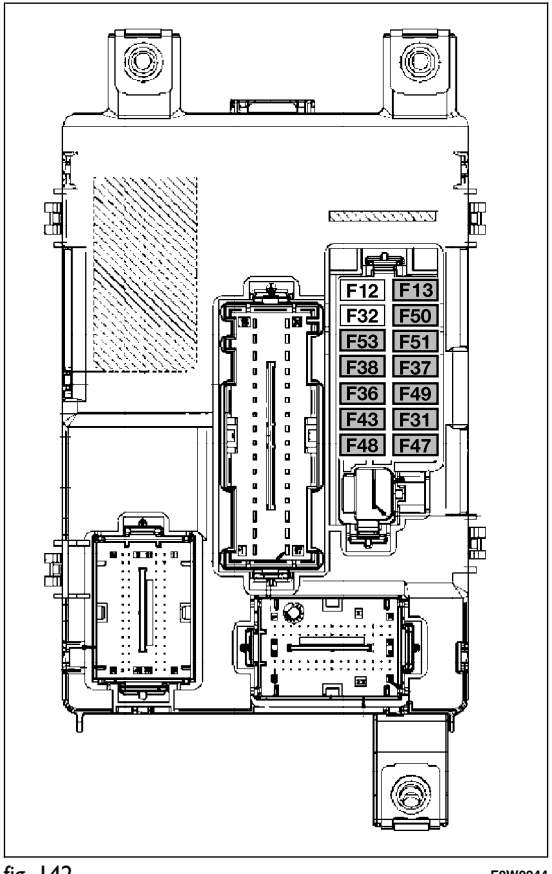

fig. 142 F0W0244

FUSE SUMMARY TABLE

Engine compartment fuse box	FUSE	AMPS
Body Computer Node	F01	60
Passenger compartment fan	F08	40
Fog lights	F09	15
Horns	F10	15
Main beam headlights	F14	15
Heated windscreen	F15	70
Air conditioning compressor	F19	7,5
Front power socket (with or without cigar lighter)	F20	15
Fuel pump	F21	15
Blow-by	F30	5
Sun roof motor	F82	20
+15 (*) reversing lights	F87	5
Mirrors demisting	F88	7,5
Heated rear window	F89	30
Battery charge status sensor	F90	5

(*)+15 = ignition-operated positive terminal

Dashboard fuse box	FUSE	AMPS
+15 (*) headlamp alignment corrector	F13	5
+15 (*) Ignition-operated control with inhibition during engine starting	F31	5
+30 (**)	F36	10
+15 (*) brake pedal switch (NA)	F37	7,5
Door central locking	F38	20
Two-way windscreen washer pump	F43	20
Front electric window (driver side)	F47	20
Front electric window (passenger side)	F48	20
+15 (*)	F49	7,5
+15 (*)	F50	7,5
+15 (*)	F51	5
+30 (**)	F53	7,5

(*)+15 = ignition-operated positive terminal
(**)+30 = battery direct positive terminal (not ignition-operated)

BATTERY RECHARGING

IMPORTANT The battery recharging procedure is given as information only. You are advised to contact a Fiat Dealership to have this operation performed.

Low amperage slow recharging for approximately 24 hours is advised. Charging for a longer time may damage the battery.

VERSIONS WITHOUT Start&Stop SYSTEM
(for versions/markets, where provided)

Charge the battery as follows:

❒ disconnect the negative battery terminal;

❒ connect the charger cables to the battery terminals, observing the polarity;

❒ turn on the charger;

❒ when it is recharged, turn the charger off before disconnecting it from the battery;

❒ reconnect the negative battery terminal.

VERSIONS WITH Start&Stop SYSTEM
(for versions/markets, where provided)

Charge the battery as follows:

❒ disconnect the connector A fig. 145 (pressing the button B) from the sensor C monitoring the battery conditions, on the negative pole D of the battery;

❒ connect the positive cable of the battery charger to the positive battery terminal E and the negative cable to sensor terminal D as shown;

❒ turn on the battery charger. At the end of the charging process, switch the battery charger off;

❒ after having disconnected the battery charger, reconnect connector A fig. 145 to the sensor C as shown.

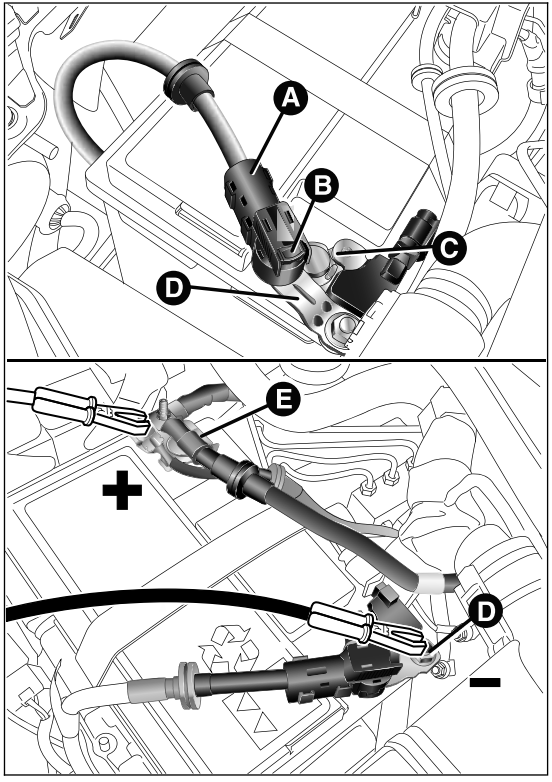

fig. 143 F0W0229

WARNING

Battery fluid is poisonous and corrosive: avoid contact with your skin and eyes. The battery should be charged in a well ventilated place, away from naked flames or possible sources of sparks: danger of explosion and fire.

WARNING

Do not attempt to charge a frozen battery: it must be thawed first, otherwise it may explode. If freezing has occurred, the battery should be checked by skilled personnel to make sure that the internal elements are not damaged and that the body is not cracked, with the risk of leaking poisonous and corrosive acid.

RAISING THE CAR

If the car needs to be jacked up, go to a Fiat Dealership which is equipped with shop jacks and jack arms.

WARNING

Lift the car exclusively by positioning the jack arms or the shop jack in the points illustrated fig. 146.

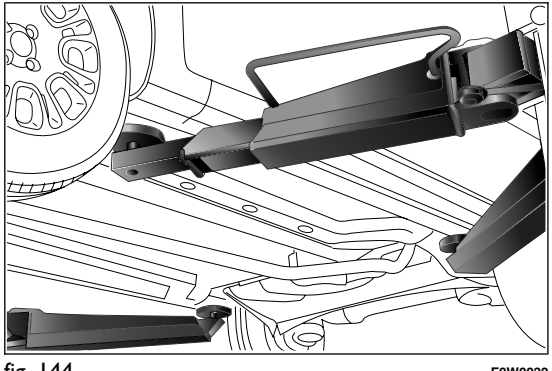

fig. 144 F0W0032

TOWING THE CAR

The tow hook, which is supplied with the car, is housed in the tool box, under the carpet in the luggage compartment.

ATTACHING THE TOW HOOK

Manually remove cap A fig. 147 (front bumper) or A fig. 148 (rear bumper) pressing the lower part, take the tow hook B fig. 147 fig. 148 from its housing in the tool box and tighten it completely on the front or rear threaded pin.

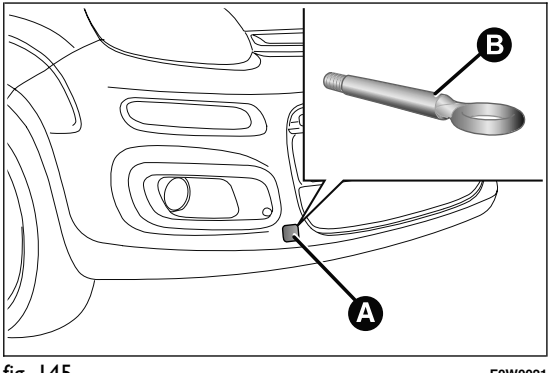

fig. 145 F0W0021

WARNING

Before towing, turn the ignition key to MAR and then to STOP without removing it. The steering column will automatically lock when the key is removed and the wheels cannot be steered.

WARNING

Before tightening the hook clean the threaded housing thoroughly. Make sure that the hook is fully fastened in the housing before towing the car.

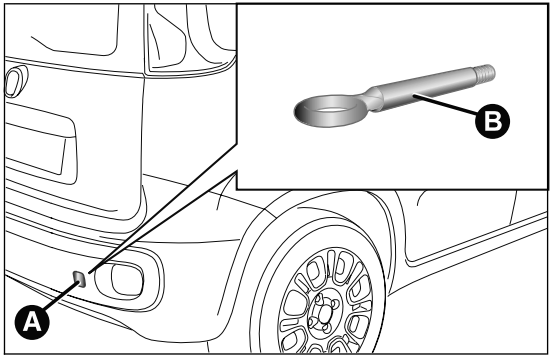

fig. 146 F0W0022

WARNING

Whilst towing, remember that as the assistance of the brake servo and the electric power assisted steering is not available, greater force needs to be exerted on the brake pedal and more effort is required on the steering wheel. Do not use flexible cables when towing and avoid jerky movements. During towing, make sure that the trailer hitch does not damage any components it is touching. When towing the car, it is compulsory to respect specific highway code regulations relating to the tow hook and procedures for towing on the road. Do not start the engine while towing the car.

WARNING

The front and rear tow hooks should be used only for emergencies on the road. You are allowed to tow the car for short distances using an appropriate device in accordance with the highway code (a rigid bar), to move the vehicle on the road in readiness for towing or transporting via a breakdown vehicle. Tow hooks MUST NOT be used to tow vehicles off the road or where there are obstacles and/or for towing operations using cables or other non-rigid devices. Respecting the above conditions, towing must take place with the two vehicles (one towing, the other towed) aligned as much as possible along the same centre line.

WARNING

Do not use tow hooks for securing the vehicle on ships.

SCHEDULED SERVICING

Correct servicing is essential in guaranteeing a long life for the car under the best conditions.

Fiat has therefore arranged a series of checks and service operations to be carried out every 30,000 kilometres (for petrol versions) or every 35,000 kilometres (for diesel versions).

Check the items on the Scheduled Servicing Plan (e.g. periodically check level of liquids, tyre pressure, etc.) before 30,000/35,000 km and between these services deadlines.

Scheduled Servicing is offered by all Fiat Dealerships according to a set time schedule. If, during each operation, in addition to the ones scheduled, the need arises for further replacements or repairs, these may be carried out only with the explicit agreement of the Customer. If your car is used frequently for towing, the interval between one service operation and the next should be reduced.

WARNING

At 2,000 km from the next service operation the display will show a message.

The Scheduled Services intervals are set out by the Manufacturer. Failure to have them carried out may invalidate the warranty.

It is advisable to inform a Fiat Dealership of any small operating irregularities without waiting for the next service.

GETTING TO KNOW YOUR CAR
SAFETY
STARTING AND DRIVING
WARNING LIGHTS AND MESSAGES
IN AN EMERGENCY
SERVICING AND MAINTENANCE
TECHNICAL SPECIFICATIONS
INDEX

SCHEDULED SERVICING PLAN

PETROL VERSIONS

Services must be performed every 30,000 km or 24 months.

Thousands of miles	**18**	**36**	**54**	**72**	**90**	**108**
Thousands of km	**30**	**60**	**90**	**120**	**150**	**180**
Months	**24**	**48**	**72**	**96**	**120**	**144**
Check battery charge status and recharge if necessary	●	●	●	●	●	●
Check tyre condition/wear and adjust pressure, if necessary	●	●	●	●	●	●
Check operation of lighting system (headlamps, direction indicators, hazard warning lights, luggage compartment, passenger compartment, glove compartment, instrument panel warning lights, etc.)	●	●	●	●	●	●
Check operation of windscreen washer system and adjust jets if necessary.	●	●	●	●	●	●
Check windscreen/rear window wiper blade position/wear	●	●	●	●	●	●
Check cleanliness of bonnet and tailgate locks and cleanliness and lubrication of linkages	●	●	●	●	●	●
Visually inspect condition of: exterior bodywork, underbody protection, pipes and hoses (exhaust - fuel system - brakes), rubber elements (boots, sleeves, bushes, etc.)	●	●	●	●	●	●
Check front disc brake pad condition and wear	●	●	●	●	●	●
Check rear drum brake lining condition and wear		●		●		●
Check and, if necessary, top-up fluid levels (engine cooling, hydraulic clutch/ brakes, windscreen washer, battery, etc.)	●	●	●	●	●	●
Visually inspect conditions of the accessory drive belt(s)		●				●

Thousands of miles	18	36	54	72	90	108
Thousands of km	**30**	**60**	**90**	**120**	**150**	**180**
Months	**24**	**48**	**72**	**96**	**120**	**144**
Check tensioning of accessory drive belt (versions without automatic tensioner) (or every 24 months)	●				●	
Check condition of toothed timing drive belt (0.9 TwinAir 85 HP and 0.9 TwinAir Turbo 65 HP engine excluded)		●				●
Check handbrake lever travel and adjust, if required	●	●	●	●	●	●
Check exhaust gas emissions/smokiness	●	●	●	●	●	●
Check operation of engine management systems (using diagnosis socket)	●	●	●	●	●	●
Check manual gearbox oil level			●			●
Check tappet clearance and adjust as necessary (1.2 8V 69 HP version)		●		●		●
Replace spark plugs (1.2 8V 69 HP and 0.9 TwinAir Turbo 85 HP versions) (*)	●	●	●	●	●	●
Replace spark plugs (0.9 TwinAir 65 HP version) (*)		●		●		●
Replace accessory drive belt(s)				●		

(*) On the 0.9 TwinAir versions the following are vital in order to ensure correct operation and prevent serious damage to the engine:

(*) - only use spark plugs specifically certified for these engines; all spark plugs should be of the same type and brand (see the "Engine" paragraph in the "Technical Specifications" chapter);

(*) - adhere strictly to the spark plug replacement intervals detailed in the Scheduled Servicing Plan;

(*) - it is advisable to contact a Fiat Dealership for plug replacement.

Thousands of miles	**18**	**36**	**54**	**72**	**90**	**108**
Thousands of km	**30**	**60**	**90**	**120**	**150**	**180**
Months	**24**	**48**	**72**	**96**	**120**	**144**
Replace toothed timing drive belt (0.9 TwinAir 85 HP and 0.9 TwinAir 65 HP engine excluded)(**)				●		
Replace air cleaner cartridge (1.2 8V 69 HP versions)		●		●		●
Replace air cleaner cartridge (0.9 TwinAir Turbo 85 HP and 0.9 TwinAir 65 HP versions)	●	●	●	●	●	●
Change engine oil and replace oil filter (***)	●	●	●	●	●	●
Change brake fluid (or every 24 months)		●		●		●
Change pollen filter (or every 12 months)	●	●	●	●	●	●

(**) Regardless of the distance covered, the timing belt must be changed every four years for particularly demanding use (cold climates, town driving, long periods of idling) or at least every five years.

(***) If the vehicle has an annual mileage of less than 10,000 km, the engine oil and engine oil filter should be changed every 12 months.

DIESEL VERSIONS

Services must be performed every 35,000 km or 24 months.

Thousands of miles	**21**	**42**	**63**	**84**	**105**
Thousands of km	**35**	**70**	**105**	**140**	**175**
Months	**24**	**48**	**72**	**96**	**120**
Check battery charge status and possibly recharge	●	●	●	●	●
Check tyre condition/wear and adjust pressure, if necessary	●	●	●	●	●
Check operation of lighting system (headlamps, direction indicators, hazard warning lights, luggage compartment, passenger compartment, glove compartment, instrument panel warning lights, etc.)	●	●	●	●	●
Check operation of windscreen washer system and adjust jets if necessary.	●	●	●	●	●
Check windscreen/rear window wiper blade position/wear	●	●	●	●	●
Check cleanliness of bonnet and tailgate locks and cleanliness and lubrication of linkages	●	●	●	●	●
Visually inspect condition of: exterior bodywork, underbody protection, pipes and hoses (exhaust - fuel system - brakes), rubber elements (boots, sleeves, bushes, etc.)	●	●	●	●	●
Check front disc brake pad condition and wear	●	●	●	●	●
Check rear drum brake lining condition and wear		●		●	
Check and, if necessary, top-up fluid levels (engine cooling, hydraulic clutch/ brakes, windscreen washer, battery, etc.)	●	●	●	●	●
Visually inspect conditions of the accessory drive belt(s)		●			●
Check handbrake lever travel and adjust, if required	●	●	●	●	●
Check exhaust gas emissions/smokiness	●	●	●	●	●

Thousands of miles	**21**	**42**	**63**	**84**	**105**
Thousands of km	**35**	**70**	**105**	**140**	**175**
Months	**24**	**48**	**72**	**96**	**120**
Check operation of engine management systems (using diagnosis socket)	●	●	●	●	●
Checking the manual gearbox oil level	●	●	●	●	●
Replace fuel filter cartridge		●		●	
Replace accessory drive belt(s)			●		
Replace air cleaner cartridge	●	●	●	●	●
Replacement of engine oil and oil filter (or every 24 months) (*) (**)					
Change brake fluid (or every 24 months)		●		●	
Change pollen filter (or every 12 months)	●	●	●	●	●

(*) If the vehicle is mainly used for town driving or has an annual mileage of less than 10,000 km, the engine oil and filter should be changed every 12 months.

(**) The actual oil and engine oil filter replacement interval depends on the car usage conditions and is indicated by a warning light or message on the instrument panel, or in any case every 24 months.

PERIODIC CHECKS

Every 1,000 km or before long journeys, check and, if necessary, top up the following:

❒ engine coolant, brake fluid and windscreen washer fluid level;

❒ tyre inflation pressure and condition;

❒ operation of lighting system (headlamps, direction indicators, hazard warning lights, etc.);

❒ operation of screen washer/wiper system and positioning/wear of windscreen/rear window wiper blades.

Every 3,000 km, check and top up, if required, the engine oil level.

HEAVY-DUTY USE OF THE CAR

If the car is used mainly under one of the following conditions:

❒ towing a trailer or caravan;

❒ dusty roads;

❒ short, repeated journeys (less than 7-8 km) at sub-zero outside temperatures;

❒ engine often idling or driving long distances at low speeds or long periods of idleness;

the following checks must be carried out more often than indicated in the Scheduled Servicing Plan:

❒ check front disc brake pad conditions and wear;

❒ check cleanliness of side locks, bonnet and luggage compartment locks, and cleanliness and lubrication of linkages;

❒ visually inspect conditions of: engine, gearbox, transmission, pipes and hoses (exhaust - fuel system - brakes) and rubber elements (boots - sleeves - bushes - etc.);

❒ check battery charge and battery fluid level (electrolyte);

❒ visually inspect condition of the accessory drive belts;

❒ check and, if necessary, change engine oil and replace oil filter;

❒ check and, if necessary, replace pollen filter.

CHECKING FLUID LEVELS

WARNING

Never smoke while working in the engine compartment: gas and inflammable vapours may be present, with the risk of fire.

WARNING

Be very careful when working in the engine compartment when the engine is hot: you may get burned. Remember that the fan may start up if the engine is hot: this could injure you. Scarves, ties and other loose clothing might be pulled by moving parts.

Be careful, when topping up, and take care not to mix up the various types of fluids: they are all incompatible with one another and could seriously damage the car.

0.9 TwinAir 65 HP versions

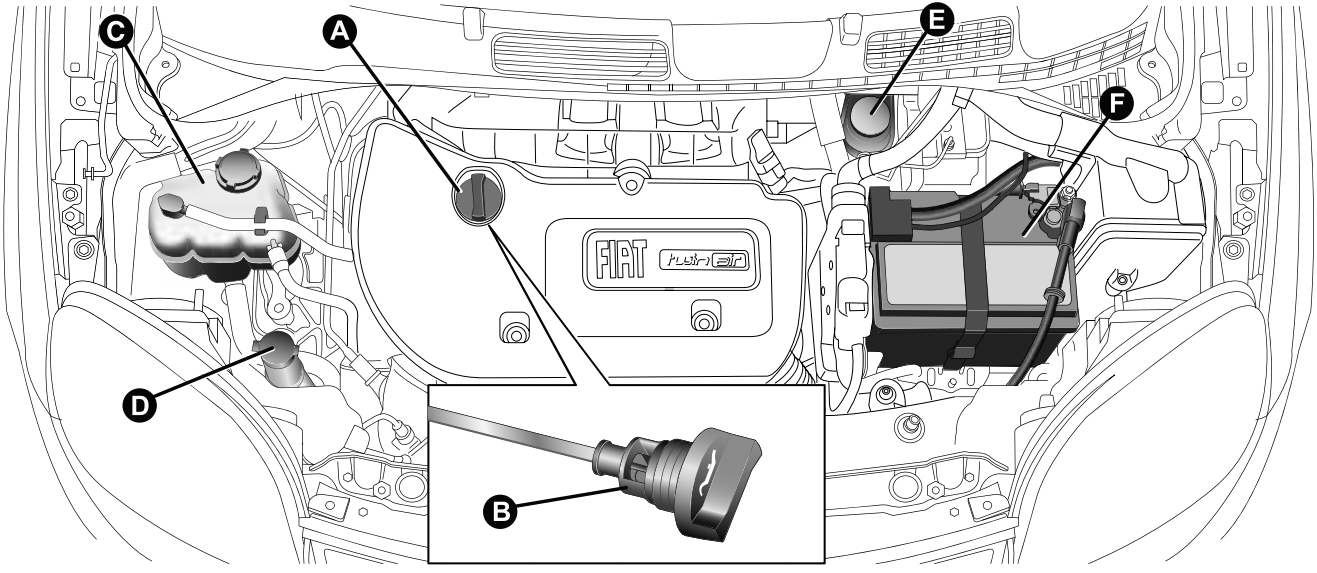

fig. 147 F0W0330

A. Engine oil plug/filler - B. Engine oil dipstick - C. Engine coolant - D. Washer fluid for windscreen/rear window - E. Brake fluid - F. Battery

0.9 TwinAir 85 HP versions

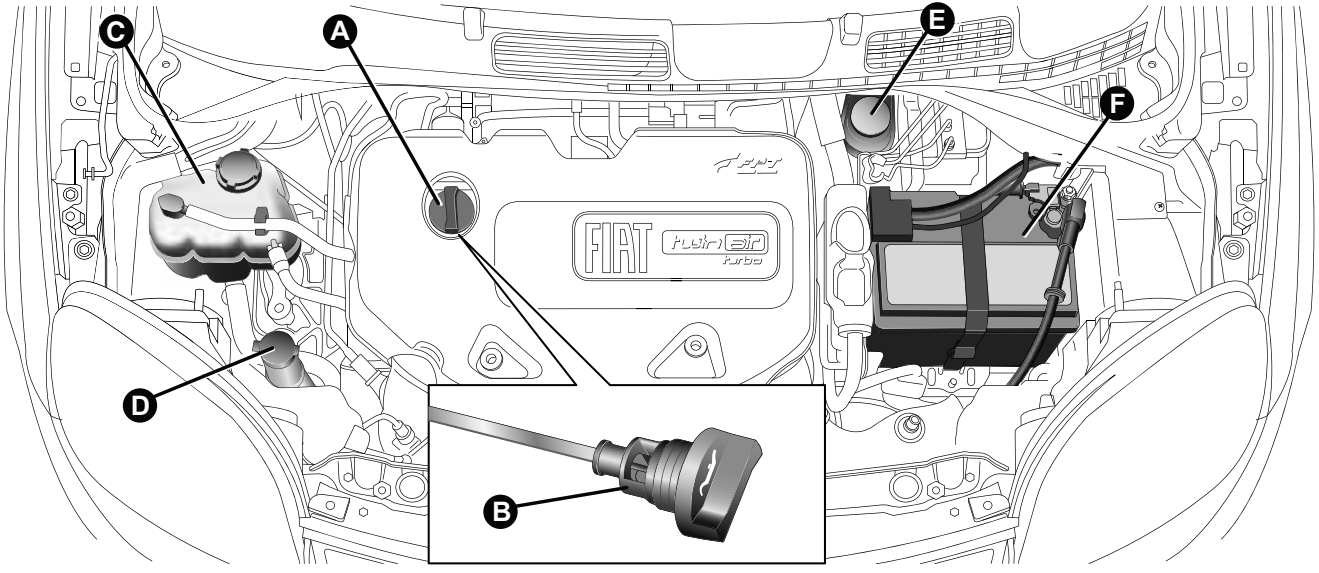

fig. 148 F0W0089

A. Engine oil plug/filler - B. Engine oil dipstick - C. Engine coolant - D. Washer fluid for windscreen/rear window - E. Brake fluid - F. Battery

1.2 8V 69 HP versions

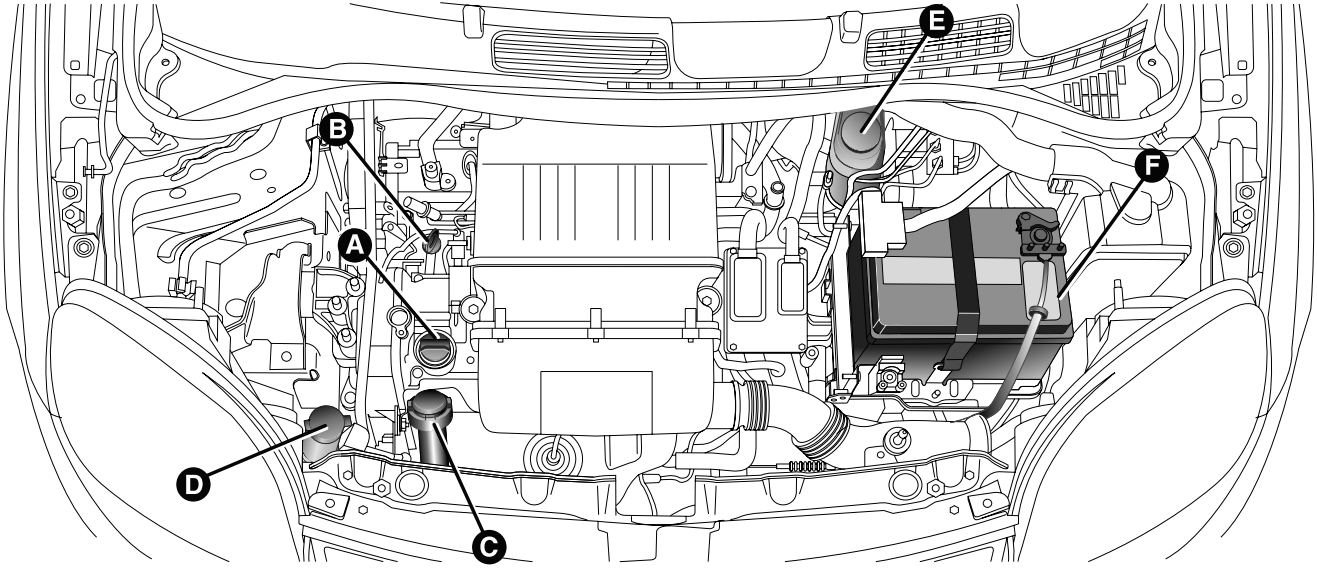

fig. 149

F0W0050

A. Engine oil plug/filler - B. Engine oil dipstick - C. Engine coolant - D. Washer fluid for windscreen/rear window - E. Brake fluid - F. Battery

1.3 16V MultiJet versions

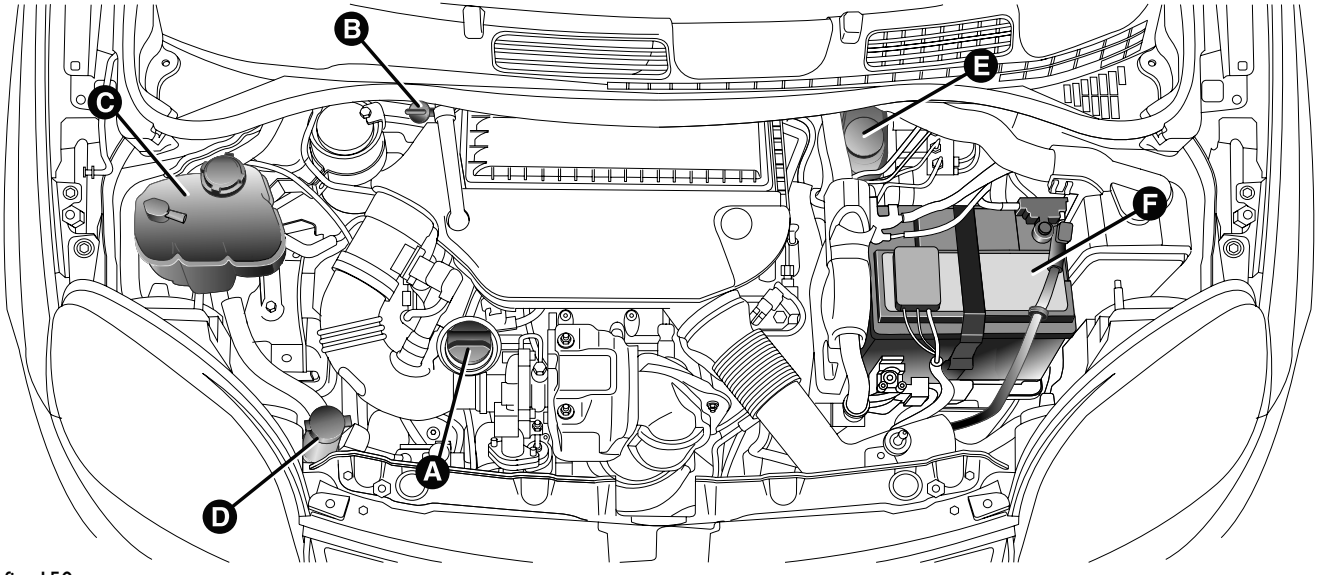

fig. 150 F0W0090

A. Engine oil plug/filler - B. Engine oil dipstick - C. Engine coolant - D. Washer fluid for windscreen/rear window - E. Brake fluid - F. Battery

ENGINE OIL

Check the oil level a few minutes (about five) after the engine has stopped, with the vehicle parked on level ground.

For 1.2 8V 69 HP and 1.3 16V MultiJet versionsfig. 149 fig. 150

Remove the engine oil dipstick B, clean it with a cloth that does not leave any trace and reinsert it. Extract the engine oil dipstick again and check that the level is between the MIN and MAX marks on the dipstick.

The range between the MIN and MAX marks corresponds to about 1 litre of oil.

If the oil level is near or under the MIN mark, add oil through the filler A until it reaches the MAX mark.

The oil level should never exceed the MAX mark.

For 0.9 TwinAir 65 HP fig. 147 and 0.9 TwinAir 85 HP versions fig. 148

The engine oil dipstick B is integral with plug A. Loosen the plug, clean the dipstick with a cloth that does not leave traces, reinsert the dipstick and re-tighten the plug. Extract the plug again and check that the level is between the MIN and MAX marks on the dipstick.

Engine oil consumption

The maximum engine oil consumption is approximately 400 grams every 1,000 km.

During the initial period of usage for the vehicle, the engine is bedding in, therefore the engine oil consumption may settle down only after the first 5,000 - 6,000 km.

IMPORTANT After adding or changing the oil, let the engine run for a few seconds and wait a few minutes after switching it off before checking the level.

Do not add oil with characteristics that are different from those of the oil currently in the engine.

Used engine oil and filter contain harmful substances for the environment. To change the oil and filters, we advise you to contact a Fiat Dealership.

ENGINE COOLANT FLUID

The coolant level must be checked when the engine is cold and must be between the MIN and MAX marks on the reservoir.

If the level is too low, undo reservoir cap C (see previous pages) and add the fluid described in the chapter "Technical Specifications".

PARAFLU UP anti-freeze is used in the engine cooling system. Use the same fluid as in the cooling system when topping up. PARAFLU UP cannot be mixed with any other type of fluid. If this happens, do not start the engine and contact a Fiat Dealership.

WARNING

The cooling system is pressurised. If necessary, only replace the cap with another genuine one or the operation of the system may be adversely affected. Do not remove the reservoir cap when the engine is hot: you risk scalding yourself.

WINDSCREEN/REAR WINDOW WASHING FLUID

If the level is too low, raise reservoir cap D (see previous pages) and add the fluid described in the chapter "Technical Specifications".

WARNING

Do not travel if the windscreen washer reservoir is empty: using the windscreen washer is essential for improving visibility. Some commercial windscreen washer additives are flammable. The engine compartment contains hot components which may set it on fire.

BRAKE FLUID

Check that the liquid is at the maximum level (the fluid level in the reservoir must not exceed the MAX mark). If the fluid level in the tank is too low, undo reservoir cap E (see previous pages) and add the fluid described in the chapter "Technical Specifications".

Note Carefully clean the cap of the reservoir E and the surrounding surface.

When opening the cap, make sure that no dirt gets into the reservoir.

For topping-up, always use a funnel with integrated filter with mesh equal to or lower than 0.12 mm.

IMPORTANT Brake fluid is hygroscopic (i.e. it absorbs moisture). For this reason, if the car is mainly used in areas with a high degree of atmospheric humidity, the fluid should be replaced at more frequent intervals than specified in the “Scheduled Servicing Plan”.

Prevent brake fluid, which is highly corrosive, from coming into contact with painted parts. Should it happen, immediately wash with water.

WARNING

Brake fluid is poisonous and highly corrosive. If contact accidentally occurs, immediately wash the affected areas with water and a neutral detergent, and then rinse thoroughly with water. Call a doctor immediately if swallowed.

WARNING

The symbol ◎ on the container indicates a synthetic brake fluid, which is different from a mineral fluid. Using a mineral-type fluid will damage the special rubber seals of the braking system beyond repair.

AIR CLEANER/POLLEN FILTER/DIESEL FILTER

For filter replacement, contact a Fiat Dealership.

BATTERY

Battery F (see previous pages) does not require the electrolyte to be topped up with distilled water. A periodic check carried out at a Fiat Dealership is, however, necessary to check efficiency.

REPLACING THE BATTERY

If necessary, replace the battery with another genuine battery with the same specifications. Follow the battery manufacturer's instructions for maintenance.

USEFUL ADVICE FOR EXTENDING THE LIFE OF YOUR BATTERY

To avoid draining your battery and make it last longer, observe the following instructions:

❒ when you park the car, ensure that the doors, tailgate and bonnet are closed properly, to prevent any roof lights from remaining on inside the passenger's compartment;

❒ switch off all roof lights inside the car: the car is however equipped with a system which switches all internal lights off automatically;

❒ do not keep accessories (e.g. sound system, hazard lights, etc.) switched on for a long time when the engine is not running;

❒ before performing any operation on the electrical system, disconnect the negative battery pole;

❒ Completely tighten the battery terminals.

IMPORTANT If the charge level remains under 50% for a long time, the battery is damaged by sulphation, reducing its capacity and efficiency at start-up.

The battery will also be more at risk of freezing (this can happen as early as -10°C). Refer to the paragraph "Car inactivity" in "Starting and driving" if the car is left parked for a long time.

If, after buying the car, you wish to install electrical accessories which require permanent electrical supply (alarm, etc.) or accessories which influence the electrical supply requirements, contact a Fiat Dealership, whose qualified staff will evaluate the overall electrical consumption.

WARNING

Battery liquid is poisonous and corrosive. Avoid contact with the skin and eyes. Keep naked flames and sources of sparks away from the battery: risk of explosion and fire.

WARNING

Using the battery with insufficient fluid irreparably damages the battery and may cause an explosion.

Incorrect installation of electric and electronic devices may cause severe damage to your car. After purchasing your vehicle, if you wish to install any accessories (car alarm, car phone, etc.), please contact your Fiat Dealership, which will suggest the most appropriate devices for your vehicle, and will, most importantly, recommend installing a oversized battery.

Batteries contain substances which are very dangerous for the environment. For battery replacement, contact a Fiat Dealership.

WARNING

If the car will be unused for an extended period of time in extremely cold weather conditions, remove the battery and store it in a heated area to avoid it freezing.

WARNING

Always wear appropriate goggles when working on or near the battery.

BRAKES

The car is equipped with 4 mechanical wear detection systems for brake pads: one for each wheel assembly.

When the brake linings are about to wear out, pressing the brake pedal, a light hiss is heard: this indication lasts around 100 km (depending on the driving style and the route type).

In these circumstances it is still possible, proceeding with caution, to carry on driving.

In any case, contact a Fiat Dealership as soon as possible to have the worn brake pads replaced.

WHEELS AND TYRES

Before long trips, and every two weeks, check the tyre and space-saver wheel inflation pressure (for versions/markets, where provided). Check the tyres when cold.

It is normal for the pressure to increase when the car is used; for the correct tyre inflation pressure, see “Wheels” in the “Technical specifications” section.

Incorrect pressure causes abnormal tyre wear fig. 153:

A normal pressure: tread evenly worn;

B low pressure: tread particularly worn at the edges;

C high pressure: tread particularly worn in the centre.

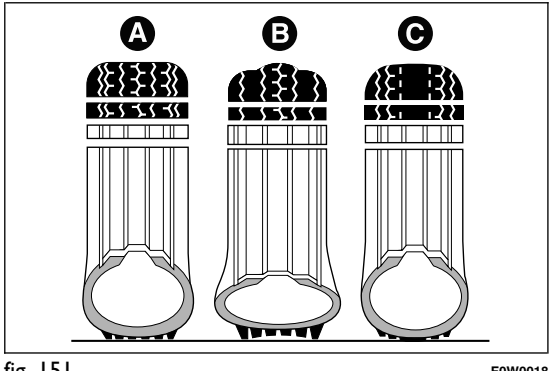

fig. 151 F0W0018

The tyres must be replaced when the tread is less than 1.6 mm thick. In any case, follow the laws in force in the country where you are driving.

IMPORTANT

Take the following precautions to prevent damage to the tyres:

❒ avoid braking suddenly, racing starts and violent impact against the curb, potholes or other obstacles and driving for extended periods on uneven road surfaces;

❒ periodically check that the tyres have no cuts in the side wall, abnormal swelling or irregular tread wear;

❒ avoid travelling with the car overloaded. If a tyre is punctured, stop immediately and change it;

❒ tyres age even if they are not used much. Cracks in the tread rubber and at the sides are a sign of ageing. In any case, if the tyres have been on the car for over 6 years, they should be checked by specialised personnel. Also remember to check the space-saver wheel very carefully (for versions/markets, where provided);

❒ change the position of the tyres every 10-15 thousand kilometres, keeping them on the same side of the car to avoid inverting the rotation direction;

❒ In the case of replacement, always fit new tyres, avoiding those of dubious origin;

❒ if a tyre is changed, also change the inflation valve.

WARNING

The road holding qualities of the car also depend on the correct inflation pressure of the tyres.

WARNING

If tyre pressure is too low, it may overheat and be severely damaged as a result.

WARNING

Do not switch tyres from the right-hand side of the vehicle to the left-hand side, and vice versa.

WARNING

Never submit alloy rims to repainting treatments requiring the use of temperatures exceeding 150°C. The mechanical properties of the wheels could be impaired.

WINDSCREEN/REAR WINDOW WIPER

BLADES

Replace the blades if the rubber edge is deformed or worn. In any event, it is advisable to replace them approximately once a year.

A few simple precautions can reduce the possibility of damage to the blades:

- ❒ if the temperature falls below zero, make sure that ice has not frozen the rubber against the glass. Use an antifreeze product to release it if required;
- ❒ remove any snow from the glass: in addition to protecting the blades, this prevents effort on the motor and over-heating;
- ❒ do not operate the windscreen/rear window wipers on dry glass.

WARNING

Driving with worn windscreen/rear window wiper blades is a serious hazard, because visibility is reduced in bad weather.

Replacing the wiper blades

Proceed as follows:

❒ raise the wiper arm, press tab A fig. 154 of the attachment spring and remove the blade from the arm;

❒ fit the new blade, inserting the tab into the special slot in the arm, making sure that it is locked;

❒ lower the windscreen wiper arm on the windscreen.

Do not operate the windscreen wiper with the blades lifted from the windscreen.

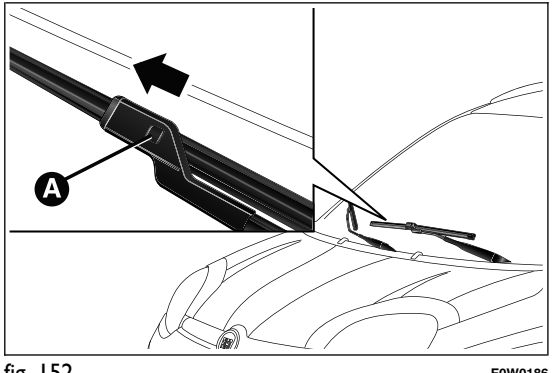

fig. 152 F0W0186

Replacing the rear window wiper blade

Proceed as follows:

❒ raise cover A fig. 155, undo nut B and remove arm C;

❒ correctly position the new arm, fully tighten nut B then lower cover A.

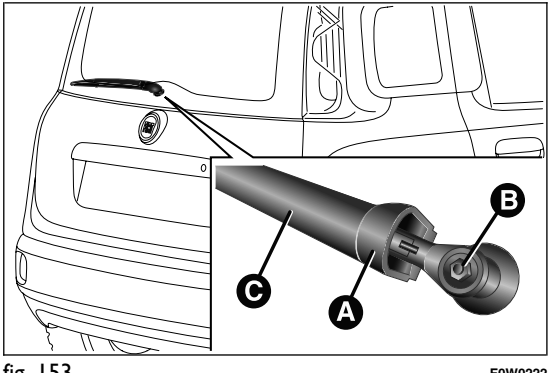

fig. 153 F0W0222

SPRAY NOZZLES

Windscreen washer

The windscreen washer jets A fig. 156 can be adjusted rotating the side notch with a screwdriver B. If there is no jet of fluid, firstly check that there is fluid in the reservoir (see "Checking fluid levels" in this chapter).

Then check that the nozzle holes are not clogged; use a needle to unblock them if necessary.

IMPORTANT In versions with a sun roof, make sure that the sun roof is closed before operating the window washer jets.

Rear window washer

The rear window washer jets are fixed. The nozzle holder is on the rear window fig. 157.

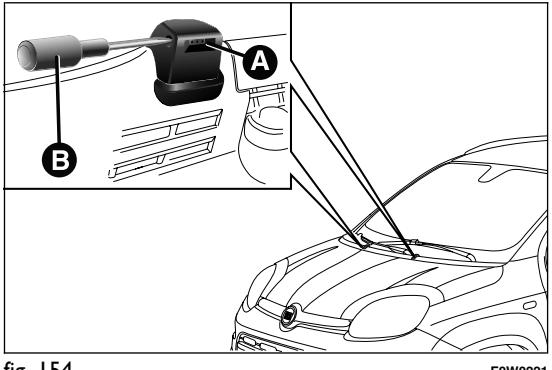

fig. 154 F0W0221

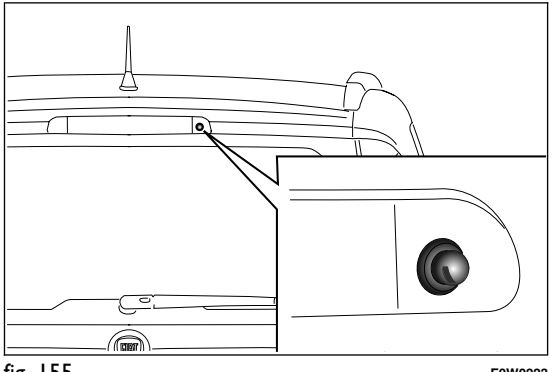

fig. 155 F0W0223

BODYWORK

PROTECTION AGAINST ATMOSPHERIC AGENTS

The car is equipped with the best available technological solutions to protect the bodywork against corrosion.

These are the most important:

❒ painting products and systems which give the car particular resistance to corrosion and abrasion;

❒ use of galvanised (or pretreated) steel sheets, with high resistance to corrosion;

❒ spraying of plastic parts, with a protective function in the more exposed points: underdoor, inner wing, edges, etc;

❒ use of "open" boxed sections to prevent condensation and pockets of moisture from triggering rust inside.

BODY AND UNDERBODY WARRANTY

Your car is covered by warranty against perforation due to corrosion of any original element of the structure or body.

For the general terms of this warranty, refer to your Warranty Booklet.

PRESERVING THE BODYWORK

Paintwork

Touch up abrasions and scratches immediately to prevent the formation of rust.

Maintenance of paintwork consists of washing the car: the frequency depends on the conditions and environment where the car is used. For example, in highly polluted areas, or if the roads are spread with salt, it is advisable to wash the car more frequently.

To correctly wash the car, proceed as follows:

❒ remove the aerial from the roof to prevent damage to it if the car is washed in an automatic system;

❒ if high pressure jets or cleaners are used to wash the car, keep a distance of at least 40 cm from the bodywork to avoid damage or alteration. It should be remembered that the build up of water can damage the car over a period of time;

❒ wash the body using a low pressure jet of water;

❒ wipe a sponge with a slightly soapy solution over the bodywork, frequently rinsing the sponge;

❒ rinse well with water and dry with a jet of air or a chamois leather.

Dry the less visible parts (e.g. door frames, bonnet, headlight frames etc.) with special care, as water may stagnate more easily in these areas. The car should not be taken to a closed area immediately, but left outside so that residual water can evaporate.

Do not wash the car after it has been left in the sun or with the bonnet hot: this may alter the shine of the paintwork.

Exterior plastic parts must be cleaned in the same way as the rest of the car.

Avoid parking under trees as much as possible; the resin from trees dulls the paintwork and increases the possibility of corrosion.

IMPORTANT Bird droppings must be washed off immediately and thoroughly as the acid they contain is particularly aggressive.

Detergents pollute the environment. Only wash your car in areas equipped to collect and treat wastewater from this type of activity.

In order to preserve the aesthetic appearance of the paint abrasive products and/or polishes should not be used for cleaning the car.

Windows

Use specific detergents and clean cloths to prevent scratching or altering the transparency.

IMPORTANT Wipe the rear window inside gently with a cloth in the direction of the filaments to avoid damaging the heating device.

Front headlights

Use a soft, damp cloth soaked in water and detergent for washing cars.

IMPORTANT Never use aromatic substances (e.g. petrol) or ketones (e.g. acetone) for cleaning the plastic lenses of the front headlights.

Engine compartment

At the end of every winter, wash the engine compartment thoroughly, taking care not to aim the jet of water directly at the electronic control units or at the windscreen wiper motors. Have this operation performed at a specialised workshop.

IMPORTANT The washing should take place with the engine cold and the ignition key in the STOP position. After the washing operation, make sure that the various protections (e.g. rubber caps and guards) have not been removed or damaged.

INTERIORS

Periodically check for water puddles under the mats that could cause the panels to rust.

WARNING

Never use flammable products, such as petrol ether or rectified petrol to clean the inside of the car. The electrostatic charges which are generated by rubbing during the cleaning operation may cause a fire.

WARNING

Do not keep aerosol cans in the car: they might explode. Aerosol cans must not be exposed to a temperature exceeding 50°C. When the car is exposed to sunlight, internal temperature can greatly exceed this value.

SEATS AND FABRIC PARTS

Remove dust with a soft brush or a vacuum cleaner.

Rub the seats with a sponge and a solution of water and mild soap.

PLASTIC AND COATED PARTS

Clean interior plastic parts with a damp cloth (if possible made from microfibre), and a solution of water and neutral, non-abrasive detergent. To clean oily or persistent stains, use specific products free from solvents and designed to maintain the original appearance and colour of the components.

Remove any dust using a microfibre cloth, if necessary moistened with water. The use of paper tissues is not recommended as these may leave residues.

IMPORTANT Never use alcohol, petrols and derivatives to clean the instrument panel lens.

LEATHER STEERING WHEEL/GEAR KNOB/HANDBRAKE

These components must be cleaned with mild soap and water only. Never use alcohol or alcohol-based products.

Read the product label carefully before using specific products for cleaning the interiors: make sure the product does not contain alcohol or alcohol-based substances.

If, when cleaning the windscreen with special products, window cleaner accidentally drips onto the leather of the steering wheel/gear lever knob/hand brake, wipe away immediately and then wash the affected area with mild soap and water.

IMPORTANT Be careful when using a steering wheel lock device, where applicable, to avoid damaging the leather upholstery by rubbing.

GETTING TO KNOW YOUR CAR
SAFETY
STARTING AND DRIVING
WARNING LIGHTS AND MESSAGES
IN AN EMERGENCY
SERVICING AND MAINTENANCE
TECHNICAL SPECIFICATIONS
INDEX

IDENTIFICATION DATA

We recommend taking note of the identification codes. The following identification codes are printed and shown on the plates:

❒ VIN plate.

❒ Chassis marking.

❒ Bodywork paint identification plate.

❒ Engine marking.

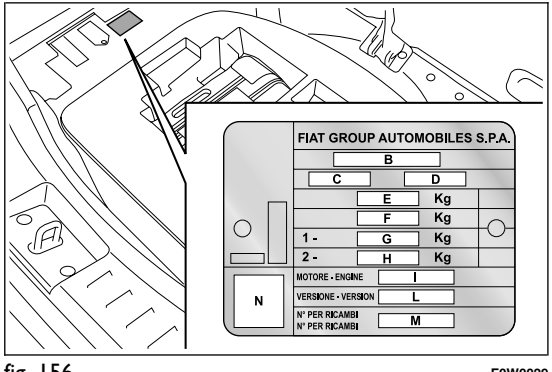

fig. 156 F0W0029

V.I.N. PLATE

This is applied on the left side of the luggage compartment fig. 158 (lift the mat for access) and bears the following data:

B Type-approval number.

C Vehicle type identification code

D Chassis serial number.

E Maximum authorised weight of vehicle fully laden

F Maximum authorised weight of vehicle fully laden plus trailer.

G Maximum permitted weight on first (front) axle

H Maximum permitted weight on second (rear) axle

I Engine type.

L Bodywork version code.

M Spares number.

N Correct value of smoke coefficient (for diesel engines).

BODYWORK PAINT IDENTIFICATION PLATE

This is applied inside the bonnet (left side) and bears the following data fig. 159:

A Paint manufacturer.

B Colour name.

C Fiat colour code.

D Respray and touch up code.

CHASSIS MARKING

This is located on the right side of the luggage compartment floor and gives the following identification data:

❒ type of vehicle;

❒ chassis serial number.

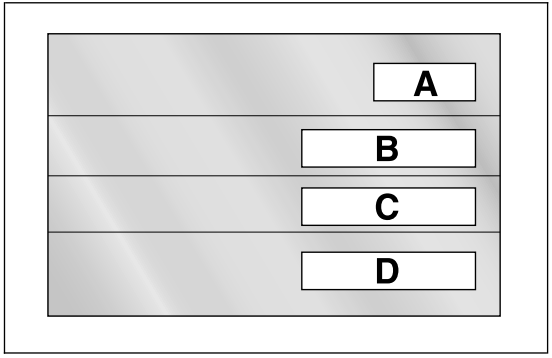

fig. 157 F0W0030

ENGINE MARKING

This is stamped on the cylinder block and gives the model and the chassis serial number.

ENGINE CODE - BODYWORK VERSIONS

Versions	Engine code	Bodywork versions
0.9 TwinAir 65 HP	312A4000	312PXH1A P4 (4-SEATER)
		312PXH1A P4B (5-SEATER)
0.9 TwinAir Turbo 85 HP	312A2000	312PXG1A P1 (4-SEATER)
		312PXG1A P1B (5-SEATER)
		312PXG1A P1G (4-SEATER) (*)
		312PXG1A P1H (5-SEATER)(*)
1.2 8V 69 HP	169A4000	312PXA1A P0 (4-SEATER)
		312PXA1A P0C (4-SEATER) (**)
		312PXA1A P0B (5-SEATER)
		312PXA1A P0D (4-SEATER) (***)
		312PXA1A P0E (5-SEATER) (***)
1.3 16V MultiJet	199A9000	312PXL1A P3 (4-SEATER)
		312PXL1A P3C (4-SEATER) (**)
		312PXL1A P3B (5-SEATER)
		312PXL1A P3D (4-SEATER) (*)
		312PXL1A P3E (5-SEATER) (*)

(*) For Trekking versions.
(**) For versions/markets, where provided.
(***) For L.G.R. (Long Gear Ratio) versions.

ENGINE

Versions	0.9 TwinAir 65 HP	0.9 TwinAir Turbo 85 HP	1.2 8V 69 HP	1.3 16V MultiJet
Type code	312A4000	312A2000	169A4000	199A9000
Cycle	Otto	Otto	Otto	Diesel
Number and arrangement of cylinders	2 in line	2 in line	4 in line	4 in line
Piston diameter and travel (mm)	83.5 x 88	80.5 x 86.0	70.8 x 78.86	69.6 x 82
Total displacement (cm³)	964	875	1242	1248
Compression ratio	11,1	10	11,1	16,8
Maximum power (EC) (kW)	48	62,5 / 57(*)	51	55
Maximum power (EC) (HP)	65	85 / 77,5(*)	69	75
corresponding engine speed (rpm)	6250	5500	5500	4000
Maximum torque (EC) (Nm)	88	145 / 100(*)	102	190
Maximum torque (EC) (kgm)	8,9	14,8 / 10,2(*)	10,4	19,4
corresponding engine speed (rpm)	3500	1900 / 2000(*)	3000	1500
Spark plugs	NGK LKR7DI-12	NGK LKR9EI-8	NGK ZKR7A-10 or CHAMPION RA8MCX4	-
Fuel	Unleaded petrol 95 RON (Specification EN 228)	Unleaded petrol 95 RON (Specification EN 228)	Unleaded petrol 95 RON (Specification EN 228)	Diesel for motor vehicles (Specification EN 590)

(*) With ECO button pressed

FUEL SUPPLY

Versions	Fuel supply
0.9 TwinAir 65 HP	Timed sequential Multipoint electronic injection, with knock control and intake valve variable actuation
0.9 TwinAir Turbo 85 HP	
1.2 8V 69 HP	Multipoint sequential timed electronic injection, returnless system
1.3 16V MultiJet	Electronically controlled Common Rail MultiJet direct injection with turbo and intercooler

WARNING

Modifications or repairs to the fuel supply system that are not carried out correctly or do not take the system's technical specifications into account can cause malfunctions leading to the risk of fire.

TRANSMISSION

Versions	Gearbox	Clutch	Drive
0.9 TwinAir 65 HP	Five forward gears and reverse with synchronizers for forward gear engagement	Self-adjusting pedal without idle stroke	Front
0.9 TwinAir Turbo 85 HP			
1.2 8V 69 HP			
1.3 16V MultiJet			

BRAKES

Versions	Front service brakes	Rear service brakes	Parking brake
0.9 TwinAir 65 HP	Disc	Drum, self-centring shoes with control cylinder for each wheel	Controlled by hand lever, acting on the rear brakes
0.9 TwinAir Turbo 85 HP	Self-ventilated disc		
1.2 8V 69 HP	Disc		
1.3 16V MultiJet	Self-ventilated disc		

IMPORTANT Water, ice and salt spread on the roads may deposit on the brake disks reducing braking efficiency the first time the brakes are applied.

SUSPENSION

Versions	Front	Rear
0.9 TwinAir 65 HP	Independent, MacPherson type with lower transversal wishbones secured to an auxiliary crossmember	Interconnected wheels by means of torsion beam
0.9 TwinAir Turbo 85 HP		
1.2 8V 69 HP		
1.3 16V MultiJet		

STEERING SYSTEM

Versions	Turning circle (m)	Type
0.9 TwinAir 65 HP	9,3	Rack and pinion with electric power steering
0.9 TwinAir Turbo 85 HP	9,3 - 9,7 (*)	
1.2 8V 69 HP	9,3	
1.3 16V MultiJet	9,3 - 9,7 (*)	

(*) For Trekking versions.

WHEELS

RIMS AND TYRES

Pressed steel or alloy rims. Tubeless radial carcass tyres. All approved tyres are listed in the registration document.

IMPORTANT If there are any discrepancies between the Owner handbook and the registration document, take the information from the latter. For safe driving, the car must be fitted with tyres of the same make and type on all wheels.

IMPORTANT Do not use tubes with tubeless tires.

SPACE-SAVER WHEEL

Pressed steel rim. Tubeless tyre.

WHEEL GEOMETRY

Front wheel toe-in measured from rim to rim: 1 ± 1 mm

The values refer to the car in running order.

CORRECT TYRE READING

Example fig. 158: 185/55 R 15 82T

185 Rated width (S, distance in mm between sidewalls)

55 Height/width ratio (H/S) as a percentage

R Radial tyre

15 Rim diameter in inches (Ø)

82 Load rating (capacity)

T Maximum speed index

Maximum speed index

Q up to 160 km/h

R up to 170 km/h

S up to 180 km/h

T up to 190 km/h

U up to 200 km/h

H up to 210 km/h

V up to 240 km/h

Maximum speed index for snow tyres

QM + S up to 160 km/h

TM + S up to 190 km/h

HM + S up to 210 km/h

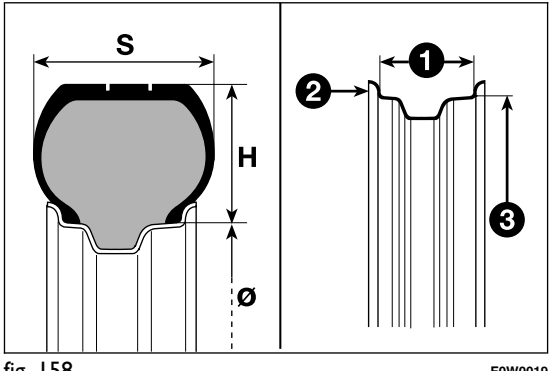

fig. 158 F0W0019

Load rating (capacity)	
70 = 335 kg	**81** = 462 kg
71 = 345 kg	**82** = 475 kg
72 = 355 kg	**83** = 487 kg
73 = 365 kg	**84** = 500 kg
74 = 375 kg	**85** = 515 kg
75 = 387 kg	**86** = 530 kg
76 = 400 kg	**87** = 545 kg
77 = 412 kg	**88** = 560 kg
78 = 425 kg	**89** = 580 kg
79 = 437 kg	**90** = 600 kg
80 = 450 kg	**91** = 615 kg

CORRECT READING OF THE RIM CODE

Example fig. 158: 6 J x 15 H2

6 rim diameter in inches (1).

J rim drop centre outline (side projection where the tyre bead rests) (2).

15 rim nominal diameter in inches (corresponds to diameter of the tyre to be mounted) (3 = Ø).

H2 shape and number of humps (circumference measurement which keeps the bead of tubeless tyres in position on the rim).

RIMS AND TYRES PROVIDED AS STANDARD

Versions	Rims	Tyres provided	Snow tyres	Space-saver wheel (*)
0.9 TwinAir 65 HP	5.5J x 14H2 - ET 35	175/65 R14 82T	175/65 R14 84Q (M+S)	135/80 R14 84M
	6J x 15H2 - ET 35 (**)	185/55 R15 82T (***)	185/55 R15 82Q (M+S)	135/80 R14 84M
0.9 TwinAir Turbo 85 HP	5.5J x 14H2 - ET 35	175/65 R14 82T	175/65 R14 84Q (M+S)	135/80 R14 84M
	6J x 15H2 - ET 35 (**)	185/55 R15 82T (***)	185/55 R15 82Q (M+S)	135/80 R14 84M
	6J x 15H2 - ET 35 (**)	175/65 R15 84T (M + S) (****)	-	125/80 R15 95M
1.2 8V 69 HP	5.5J x 14H2 - ET 35	165/65 R14 79T (*)	175/65 R14 84Q (M+S)	135/80 R14 84M
	5.5J x 14H2 - ET 35	165/70 R14 81T(*)	175/65 R14 84Q (M+S)	135/80 R14 84M
	5.5J x 14H2 - ET 35	175/65 R14 82T	175/65 R14 84Q (M+S)	135/80 R14 84M
	6J x 15H2 - ET 35 (**)	185/55 R15 82T (***)	185/55 R15 82Q (M+S)	135/80 R14 84M
1.3 16V MultiJet	5.5J x 14H2 - ET 35	165/65 R14 79T (*)	175/65 R14 84Q (M+S)	135/80 R14 84M
	5.5J x 14H2 - ET 35	165/70 R14 81T(*)	175/65 R14 84Q (M+S)	135/80 R14 84M
	5.5J x 14H2 - ET 35	175/65 R14 82T	175/65 R14 84Q (M+S)	135/80 R14 84M
	6J x 15H2 - ET 35 (**)	185/55 R15 82T (***)	185/55 R15 82Q (M+S)	135/80 R14 84M
	6J x 15H2 - ET 35 (**)	175/65 R15 84T (M + S) (****)	-	125/80 R15 95M

(*) For versions/markets, where provided
(**) Alloy wheel
(***) Chains cannot be fitted
(****) For Trekking versions

COLD TYRE INFLATION PRESSURE (bar)

Add +0.3 bar to the prescribed pressure when the tyres are warm.

Recheck pressure value with cold tyres.

Tyres	No load/medium load		Full load	
	Front	Rear	Front	Rear
165/65 R14 79T (*)	2,5	2,2	2,7	2,4
165/70 R14 81T(*)	2,3	2,0	2,5	2,2
175/65 R14 82T	2,2	2,0	2,5	2,5
175/65 R15 84T (M+S) (**)	2,2	2,1	2,5	2,5
185/55 R15 82T	2,2	2,0	2,5	2,5

(*) For versions/markets, where provided
(**) For Trekking versions

Space-saver wheel (*)	bar
135/80 R14 84M	2,8
125/80 R15 95M	4,2

(*) For versions/markets, where provided

RIM PROTECTOR TYRES

WARNING

DO NOT fit wheel hub caps when using integral hub caps fixed (with springs) to the steel rim and after sale tyres provided with Rim Protector (fig. 159). Use of unsuitable tyres and hub caps may cause sudden loss of tyre pressure.

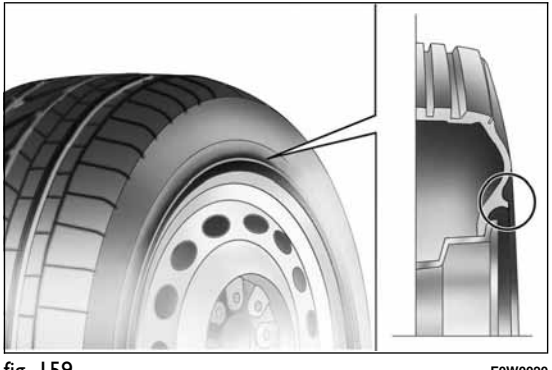

fig. 159 F0W0020

DIMENSIONS

SALOON VERSIONS

Dimensions are expressed in mm fig. 160 and refer to the car equipped with its original tyres. Height is measured with car unladen.

Luggage compartment capacity: capacity (V.D.A. standards)= 225 litres.

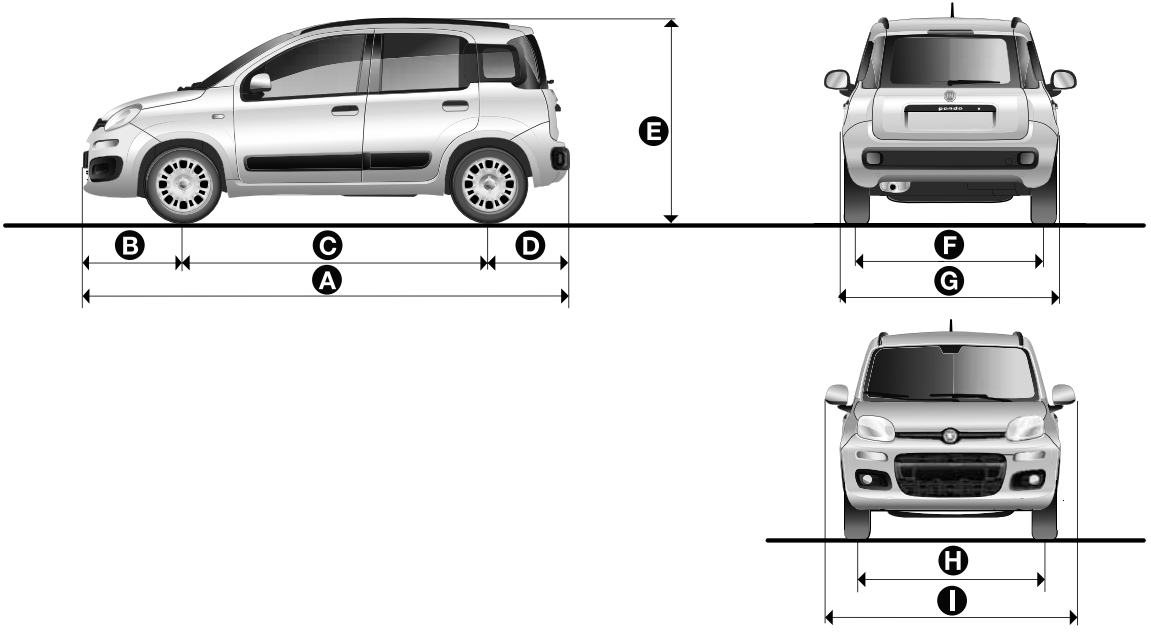

fig. 160 F0W0003

Versions	A	B	C	D	E	F	G	H	I
Saloon	3653	747	2300	606	1551	1407	1643	1409	1882

TREKKING VERSIONS

Dimensions are expressed in mm fig. 161 and refer to the car equipped with its original tyres. Height is measured with car unladen.

Luggage compartment capacity: capacity (V.D.A. standards)= 225 litres.

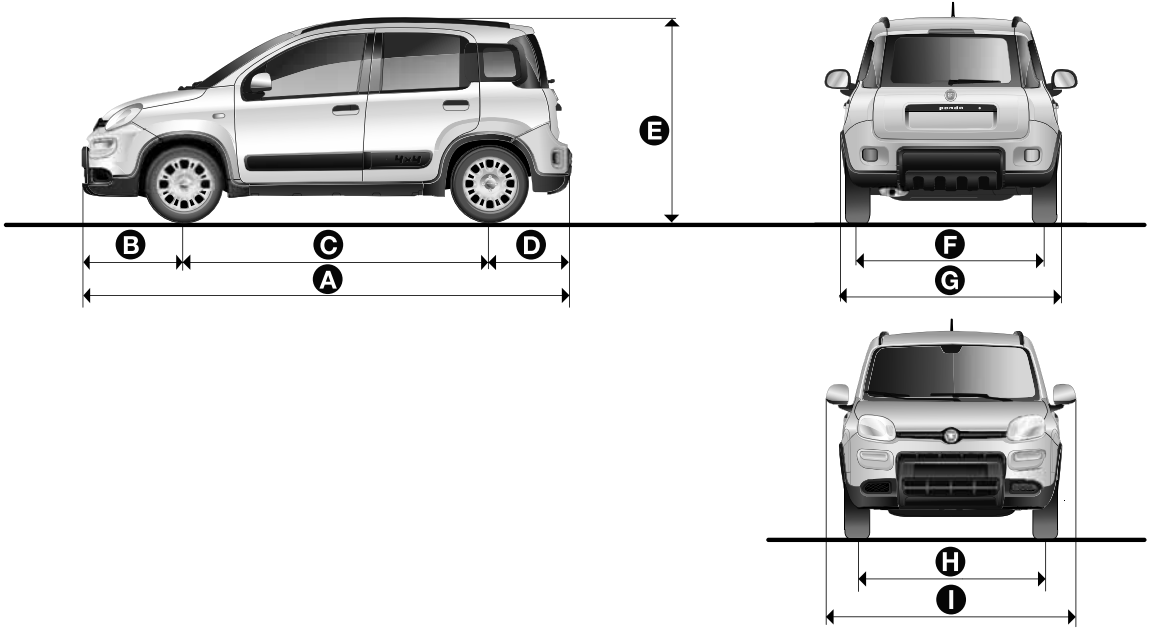

fig. 161 F0W0424

Versions	A	B	C	D	E	F	G	H	I
Trekking	3686	765	2300	621	1605	1408	1672	1414	1882

PERFORMANCE

Max. speed in km/h that can be reached after initial car use.

Versions	km/h
0.9 TwinAir 65 HP	160
0.9 TwinAir Turbo 85 HP	177 - 170 in 4th gear (*)
1.2 8V 69 HP	164
1.3 16V MultiJet	168 - 161 (*)

(*) For Trekking versions.

WEIGHTS AND LOADS

Versions	0.9 TwinAir 65 HP	0.9 TwinAir Turbo 85 HP	1.2 8V 69 HP	1.3 16V MultiJet
Unladen weight (with all fluids, fuel tank filled to 90% and without optional equipment) (kg):	955	975	940	1035
Payload including the driver (kg): (*)	480 (4 seats) / 500 (5 seats)	480 (4 seats) / 500 (5 seats)	480 (4 seats) / 500 (5 seats)	480 (4 seats) / 500 (5 seats)
Maximum permitted loads (kg) (**)				
– front axle:	770	855	770	855
– rear axle:	760	760	760	760
– total:	1435 (4 seats) / 1455 (5 seats)	1455 (4 seats) / 1475 (5 seats)	1420 (4 seats) / 1440 (5 seats)	1515 (4 seats) / 1535 (5 seats)
Towable loads (kg)				
– braked trailer:	800	800	800	900
– non-braked trailer:	400	400	400	400
Maximum load on roof:	55	55	55	55
Maximum load on the ball (braked trailer) (kg):	60	60	60	60

(*) If special equipment is fitted (sunroof, tow hitch, etc.) the unladen car weight increases, thus reducing the specified payload with respect to the maximum permitted load.

(**) Loads not to be exceeded. The user is responsible for arranging goods in the luggage compartment and/or load platform within the maximum permitted loads.

REFUELLING

Petrol versions	0.9 TwinAir 65 HP	0.9 TwinAir Turbo 85 HP	1.2 8V 69 HP	Prescribed fuels and original lubricants
Fuel tank capacity (litres):	37	37 / 35 (*)	37	Unleaded petrol not less than 95 RON (EN 228 specification)
including a reserve of (litres):	5 ÷ 7	5 ÷ 7	5 ÷ 7	
Engine cooling system (litres):	4,8	5,2	4,6	Mixture of 50% distilled water and 50% **PARAFLU^{UP}** (**)
Engine sump (litres):	-	2,8	2,5	SELENIA K P.E.
Engine sump and filter (litres):	-	3,2	2,8	
Engine sump (litres):	2,8	-	-	SELENIA DIGITEK P.E.
Engine sump and filter (litres):	3,2	-	-	
Gearbox casing/differential (litres):	1,65	1,65	1,65	TUTELA TRANSMISSION GEARFORCE
Hydraulic brake circuit (litres):	0,55	0,55	0,55	TUTELA TOP 4
Windscreen and rear window washer fluid reservoir (litres):	2,7	2,7	2,7	Mixture of water and TUTELA PROFESSIONAL SC35

(*) Trekking versions

(**) When the vehicle is used in particularly harsh weather conditions, we recommend using a mixture of 60% **PARAFLU^{UP}** and 40% demineralised water.

Diesel versions	1.3 16V MultiJet	Recommended fuels and original lubricants
Fuel tank capacity (litres):	37 / 35 (*)	Diesel for automotive engines (EN 590 Specification)
including a reserve of (litres):	5 ÷ 7	
Engine cooling system (litres):	6,3	Mixture of 50% distilled water and 50% **PARAFLU^{UP}** (**)
Engine sump (litres):	2,8	SELENIA WR P.E.
Engine sump and filter (litres):	3,0	
Gearbox casing/differential (kg):	1,8	TUTELA TRANSMISSION GEARFORCE
Hydraulic brake circuit (litres):	0,55	TUTELA TOP 4
Windscreen and rear window washer fluid reservoir (litres):	2,7	Mixture of water and TUTELA PROFESSIONAL SC35

(*) Trekking versions

(**) When the vehicle is used in particularly harsh weather conditions, we recommend using a mixture of 60% **PARAFLU^{UP}** and 40% demineralised water.

FLUIDS AND LUBRICANTS

PRODUCT SPECIFICATIONS

Use	Fluid and lubricant specifications for correct car operation	Genuine fluids and lubricants	Replacement interval
Lubricants for 0.9 TwinAir Turbo 85 HP and 1.2 8V 69 HP petrol engines	SAE 5W-40 ACEA C3 grade totally synthetic lubricant. FIAT Classification 9.55535-S2.	**SELENIA K P.E.** Contractual Technical Reference No. F603.C07	According to Scheduled Servicing Plan
Lubricants for 0.9 TwinAir 65 HP petrol engines	SAE 0W-30 ACEA C2 grade totally synthetic lubricant. FIAT Classification 9.55535-GS1.	**SELENIA DIGITEK P.E.** Contractual Technical Reference no. F020.B12	According to Scheduled Servicing Plan
Diesel engine lubricants	SAE 5W-30 ACEA C2 grade totally synthetic lubricant FIAT Classification 9.55535-S1.	**SELENIA WR P.E.** Contractual Technical Reference No. F510.D07	According to Scheduled Servicing Plan

In case of emergency, if lubricants with the prescribed specifications are not available, products with the minimum indicated ACEA performance can be used for topping up; in this case optimal performance of the engine is not guaranteed. For MultiAir/TwinAir system engines only use lubricants with indicated SAE grade and specifications. The use of products with different specifications than those indicated above could cause damage to the engine not covered by the warranty.

Use	Fluid and lubricant specifications for correct car operation	Genuine fluids and lubricants	Applications
Lubricants for motion transmission	SAE 75W grade synthetic lubricant. FIAT Classification 9.55550-MZ6.	**TUTELA TRANSMISSION GEARFORCE** Contractual Technical Reference No. F002.F10	Mechanical gearbox and differential
	Molybdenum disulphide grease, for use at high temperatures. NL.G.I. 1-2 consistency FIAT 9.55580 Classification	**TUTELA ALL STAR** Contractual Technical Reference No. F702.G07	Wheel side constant velocity joints
	Grease for constant velocity joints with low friction coefficient. NL.G.I. 0-1 consistency FIAT 9.55580 Classification	**TUTELA STAR 700** Contractual Technical Reference No. F701.C07	Differential-side constant velocity joints
Brake fluid	Synthetic fluid for brake and clutch systems. Exceeds specifications: FMVSS no. 116 DOT 4, ISO 4925 SAE J1704 Certification FIAT 9.55597	**TUTELA TOP 4** Contractual Technical Reference No. F001.A93	Hydraulic brakes and hydraulic clutch controls

Use	Fluid and lubricant specifications for correct car operation	Genuine fluids and lubricants	Applications
Protective agent for radiators	Red protective agent with antifreeze action, based on inhibited monoethyl glycol with organic formula. Exceeds CUNA NC 956-16, ASTM D 3306 specifications. FIAT Classification 9.55523.	**PARAFLU^{UP}** (*) Contractual Technical Reference No. F101.M01	Cooling circuit usage percentage: 50% water 50% **PARAFLU^{UP}** (**)
Diesel fuel additive	Additive for diesel with antifreeze and protective action for diesel engines.	**TUTELA DIESEL ART** Contractual Technical Reference No. F601.L06	To be mixed with the fuel oil (25 cc per 10 litres)
Windscreen/ rear window washer fluid	Mixture of alcohols and surfactants. Exceeds CUNA NC 956-11 specifications. FIAT Classification 9.55522	**TUTELA PROFESSIONAL SC 35** Contractual Technical Reference No. F201.D02	To be used diluted or undiluted in windscreen/ rear window washer/wiper systems

(*) IMPORTANT Do not use fluids with different specifications for topping up or mixing.
(**) For particularly harsh climate conditions, a mixture of 60% **PARAFLU^{UP}** and 40% demineralised water is recommended.

FUEL CONSUMPTION

The fuel consumption figures given in the table below are determined on the basis of the type-approval tests laid down by specific European Directives.

The procedures below are followed for measuring consumption:

❒ urban cycle: cold starting followed by driving that simulates urban use of the car;

❒ extra-urban cycle: frequent accelerating in all gears, simulating extraurban use of the car: speed varies between 0 and 120 km/h;

❒ combined fuel consumption: calculated with a weighting of approximately 37% of the urban cycle and 63% of the extra-urban cycle.

IMPORTANT The type of route, traffic conditions, weather conditions, driving style, general condition of the car, trim level/equipment/accessories, use of the climate control system, car load, presence of roof racks and other situations that adversely affect the aerodynamics or wind resistance lead to different fuel consumption figures than those measured. The fuel consumption will get more regular only after having driven the first 3000 km.

FUEL CONSUMPTION ACCORDING TO THE CURRENT EUROPEAN DIRECTIVE (litres/100 km)

Versions	Urban	Extra-urban	Combined
0.9 TwinAir 65 HP	5,0	3,8	4,2
0.9 TwinAir Turbo 85 HP	5,0 - 5,2 (*)	3,8 - 4,2 (*)	4,2 - 4,6 (*)
1.2 8V 69 HP	6,7 - 6,6 (**)	4,3 - 4,2 (**)	5,2 - 5,1 (**)
1.3 16V MultiJet	4,7 - 4,8 (*)	3,5 - 3,8 (*)	3,9 - 4,2 (*)

(*) Trekking versions.

(**) L.G.R. (Long Gear Ratio) versions.

CO_2 EMISSIONS

The CO_2 emission levels given in the following tables refer to combined consumption.

Versions	CO_2 emissions according to the current European directive (g/km)
0.9 TwinAir 65 HP	99
0.9 TwinAir Turbo 85 HP	99 - 105 (*)
1.2 8V 69 HP	120 - 118 (**)
1.3 16V MultiJet	104 - 109 (*)

(*) Trekking versions.
(**) L.G.R. (Long Gear Ratio) versions.

PRESCRIPTIONS FOR HANDLING THE VEHICLE AT THE END OF ITS LIFE

Fiat has been committed for many years to safeguarding the environment through the constant improvement of its production processes and manufacturing products that are increasingly compatible with the ecosystem. To assure customers of the best possible service in terms of respecting environmental laws and in response to European Directive 2000/53/EC governing vehicles at the end of their life, Fiat is offering their customers the opportunity of handing over their vehicle (*) at the end of its life without incurring any additional costs.

The European Directive sets out that when the vehicle is handed over the last keeper or owner should not incur any expenses as a result of it having a zero or negative market value. In particular, in almost all European Union countries, until 1st January 2007, vehicles registered after 1st July 2002 will be collected free of charge, whilst from 2007 collection will be free of charge irrespective of the year of registration as long as the vehicle contains its basic components (in particular, the engine and bodywork) and has no additional waste.

To hand your vehicle over at the end of its life without extra cost, go to one of our Dealerships or Fiat-authorised collection and scrapping centres. These centres have been carefully chosen to offer high quality service for the collection, treatment and recycling of vehicles at their end of life, respecting the surrounding environment.

You can find further information on these collection and scrapping centres either from a Fiat and Fiat Commercial Vehicle Dealership or by calling the toll-free number 00800 3428 0000 or on the Fiat website.

(*) Vehicle for transporting passengers with a maximum of nine seats and a total permitted weight of 3.5 t

DASHBOARD (RIGHT-HAND DRIVE VERSION)

The presence and position of the controls, instruments and indicators may vary according to the different versions.

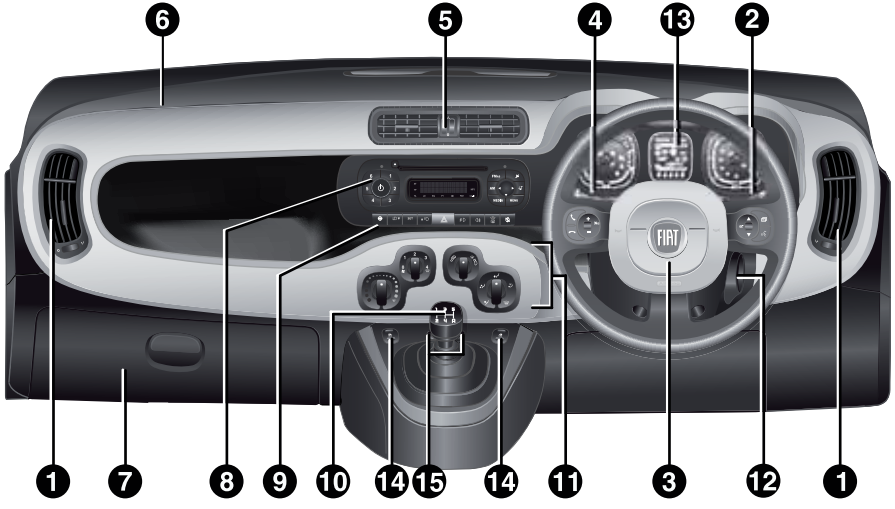

fig. 1 F0W0292

1. Adjustable and directable air diffusers – 2. Exterior light control lever – 3. Driver front airbag – 4. Windscreen wiper/rear window wiper/trip computer control lever – 5. Adjustable and directable centre air diffusers – 6. Passenger front airbag – 7. Glove compartment (for versions/markets, where provided) – 8. Car radio (for versions/markets, where provided) – 9. Control buttons – 10. Gear lever – 11. Heating/ventilation/climate control system controls – 12. Ignition device – 13. Instrument panel – 14. Electric front windows – 15. ECO/ASR OFF buttons (for versions/markets, where provided)

CONTROL PANEL AND INSTRUMENTS

The instrument background colour and type may vary according to the version.

VERSIONS WITH MULTIFUNCTION DISPLAY

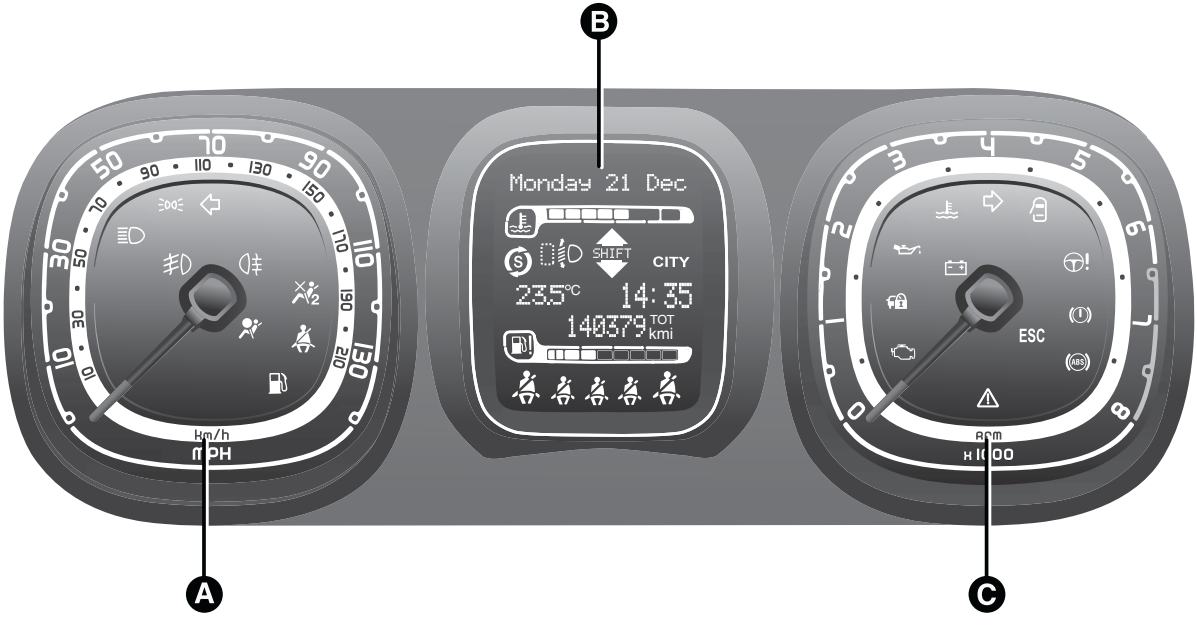

fig. 2 - Petrol versions

F0W0297

A. Speedometer (speed indicator) B. Multifunction display C. Rev counter

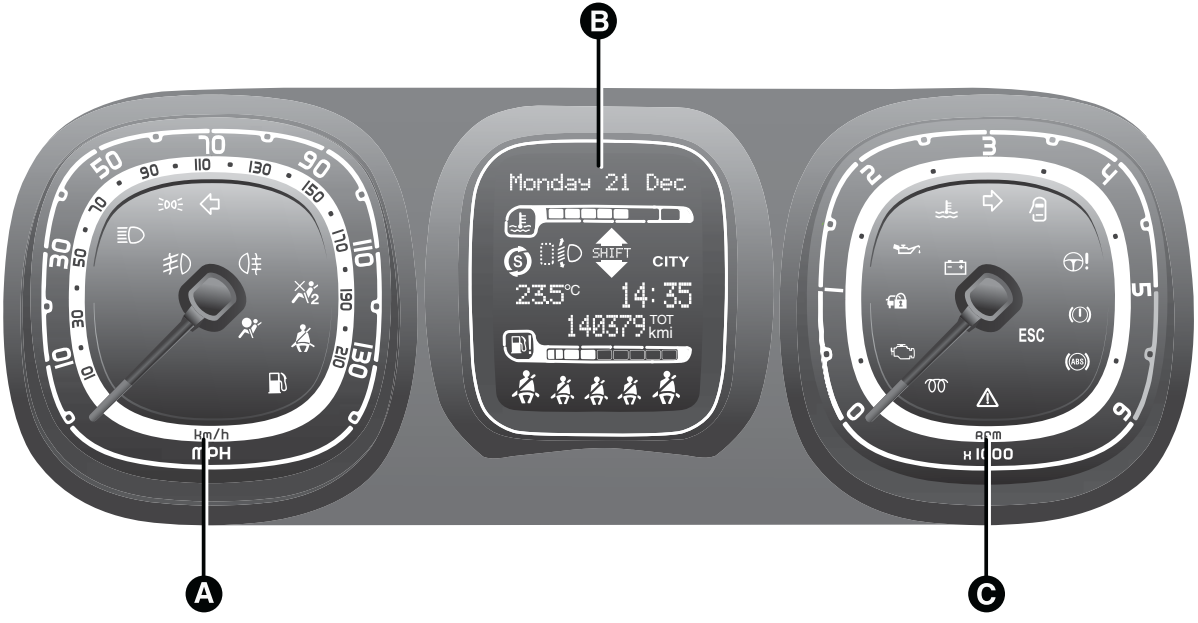

fig. 3 - Diesel versions

F0W0298

A. Speedometer (speed indicator) B. Multifunction display C. Rev counter

FUSE LOCATION

Dashboard fuse box

To access the fuses, open the glove compartment and remove the plastic cover fig. 5.
The fuses are located in the fuse box shown in fig. 6.

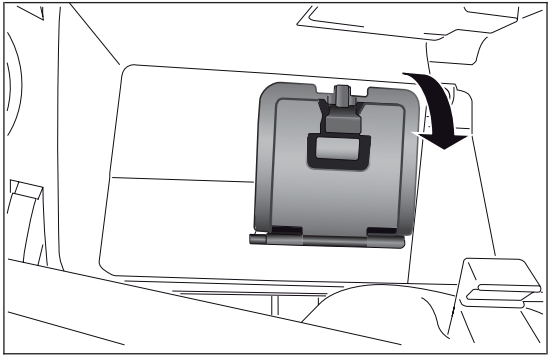

fig. 5 F0W0294

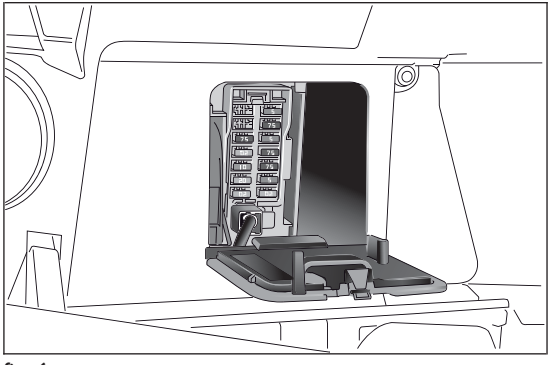

fig. 6 F0W0295

PARKING

Switch off the engine and engage the handbrake. Engage a gear (1st gear if parked uphill or reverse if facing downhill) and leave the wheels turned. If the car is parked on a steep slope block the wheels with a wedge or stone. Always remove the ignition key when leaving the car.

HANDBRAKE

To engage the handbrake pull lever A fig. 7upwards until the car is secured. To release the handbrake, raise lever A slightly, hold down button B and lower the lever.

If the car is parked on a steep slope, it is also advisable to block the wheels with a wedge or stone.

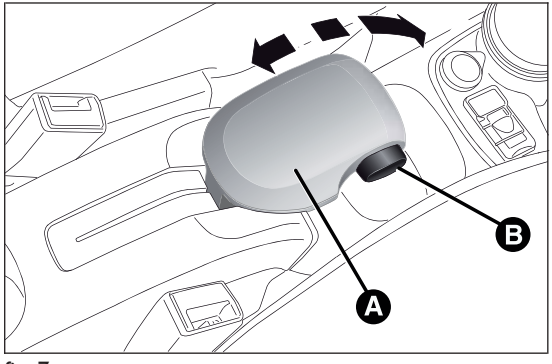

fig. 7 F0W0296

Never leave children alone in the unattended car. Always remove the ignition key when leaving the car and take it with you.

WARNING

The car should be braked after a few clicks of the lever, if it is not, contact a Fiat Dealership to have it adjusted.

S O U N D S Y S T E M

TABLE OF CONTENTS

INTRODUCTION 239
ADVICE 239
TECHNICAL CHARACTERISTICS 241

QUICK GUIDE 242
General functions 243
Radio functions 244
CD functions 244
Media Player functions (only with **Blue&Me**™) 245

STEERING WHEEL CONTROLS 246

INTRODUCTION 247

FUNCTIONS AND ADJUSTMENTS 248
SWITCHING ON THE CAR RADIO 248
SWITCHING OFF THE CAR RADIO 248
SELECTING THE RADIO FUNCTIONS 248
SELECTING CD FUNCTION 249
AUDIO SOURCE MEMORY FUNCTION 249
VOLUME ADJUSTMENT 249
MUTE/PAUSE FUNCTION 249
AUDIO SETTINGS 249
TONE ADJUSTMENT (bass/treble) 250
BALANCE ADJUSTMENT 250
FADER ADJUSTMENT 250
LOUDNESS FUNCTION 250
EQ FUNCTION 251
USER EQ SETTINGS FUNCTION 251
MENU 252
AF SWITCHING function 252
TRAFFIC INFORMATION function 253
REGIONAL MODE function 254
MP3 DISPLAY function 254
SPEED VOLUME function 255
RADIO ON VOLUME function 255
SPEECH VOLUME function 255
AUX OFFSET function 256
RADIO OFF function 256
SYSTEM RESET function 256
PHONE SET-UP 256
ANTI-THEFT PROTECTION 257

RADIO (TUNER) 258
INTRODUCTION 258
FREQUENCY BAND SELECTION 258
PRESET BUTTONS 258
STORING THE LAST STATION LISTENED TO 258
AUTOMATIC TUNING 259
MANUAL TUNING 259
AUTOSTORE FUNCTION 259
EMERGENCY ALARM RECEPTION 260
EON FUNCTION (Enhanced Other Network) 260
STEREOPHONIC BROADCASTERS 260

CD PLAYER 260
INTRODUCTION 261
SELECTING THE CD PLAYER 261
LOADING/EJECTING A CD 261
DISPLAY INFORMATION 262
TRACK SELECTION (forward/backward) 262
TRACK FAST FORWARD/REWIND 262
PAUSE FUNCTION 263

CD MP3 PLAYER 263
INTRODUCTION 263
MP3 MODE 263

SELECTING MP3 SESSIONS ON HYBRID DISCS 264
DISPLAY INFORMATION 265
SELECTING NEXT/PREVIOUS FOLDER 265
STRUCTURE OF THE FOLDERS 265
AUX (only with the **Blue&Me**™ system) 266
INTRODUCTION 266
AUX MODE 266
TROUBLESHOOTING 267
GENERAL 267
CD PLAYER 267
MP3 FILE READING 267

INTRODUCTION

The radio has been designed according to the passenger compartment's specific characteristics and with a personalised design that complements the style of the dashboard.

The instructions for use are given below. We recommend that you read them carefully.

ADVICE

Road safety

Familiarise yourself with the various car radio functions (e.g. storing radio stations), before starting to drive.

Reception conditions

Reception conditions change constantly while driving. Reception may be interfered with by the presence of mountains, buildings or bridges, or when you are far away from the broadcaster.

Note

The volume may be increased when receiving traffic alerts and news.

WARNING

If the volume is too loud this could be dangerous for the driver and for passengers when driving in traffic. Always adjust the volume so that you can still hear background noises.

Maintenance and care

Only clean the cover with a soft, anti-static cloth. Cleaning and polishing products may damage the surface.

CD

Dirt, scratches or any distortions on CDs may cause skipping during playback and poor sound quality. Follow these tips for optimum playback conditions:

❒ only use CDs with the following mark:

- ❒ clean every CD thoroughly removing any fingerprints or dust using a soft cloth. Hold CDs by the circumference and clean them from the centre towards the edge;
- ❒ never use chemical products (e.g. antistatic, thinner or spray cans) for cleaning as they could damage the surface of the CDs;
- ❒ after listening to them place CDs back in their cases to avoid them being damaged;
- ❒ do not expose CDs to direct sunlight, high temperatures or moisture for long periods;
- ❒ do not stick labels on the surface of the CD and do not write on the recorded surface using pens or pencils;
- ❒ Never use CDs that are very scratched, cracked, distorted, etc. Their use could cause damage to the player or make it malfunction;
- ❒ to achieve the best quality audio reproduction we recommend the use of original CD media. Correct operation is not guaranteed when CD-R/RW media are used that were not correctly burnt and/or with a maximum capacity above 650 Mb;
- ❒ do not use commercially available protective sheets for CDs or discs with stabilisers as they could get stuck in the internal mechanism and damage the disc;
- ❒ if a copy-protected CD is used, it may take a few seconds before the system starts to play it. The CD player cannot be guaranteed to play all protected discs. The presence of copy protection is often indicated in small letters or may be difficult to read on the cover of the CD; it may say something like, for example, "COPY CONTROL", "COPY PROTECTED", "THIS CD CANNOT BE PLAYED ON A PC/MAC" or may be identified through the use of symbols, such as, for example:

- ❒ The CD player is able to read most of the compression systems currently on the market (e.g.:LAME, BLADE, XING, FRAUNHOFER) but as these systems are continually evolving, playback of all compression formats is not guaranteed.

TECHNICAL CHARACTERISTICS

Speakers for basic audio specification

Front speakers

❒ 2 low full-range speakers with Ø 165 mm placed in the door panel.

Rear speakers

❒ 2 low full-range speakers with Ø 130 mm placed in the door panel.

Hi-Fi audio specification speakers
(for versions/markets, where provided)

Front speakers

❒ 2 mid-woofer speakers with Ø 165 mm placed in the door panel;

❒ 2 tweeters with Ø 38 mm placed on the front pillar;

Rear speakers

❒ 2 full-range speakers with Ø 130 mm placed in the door panel;

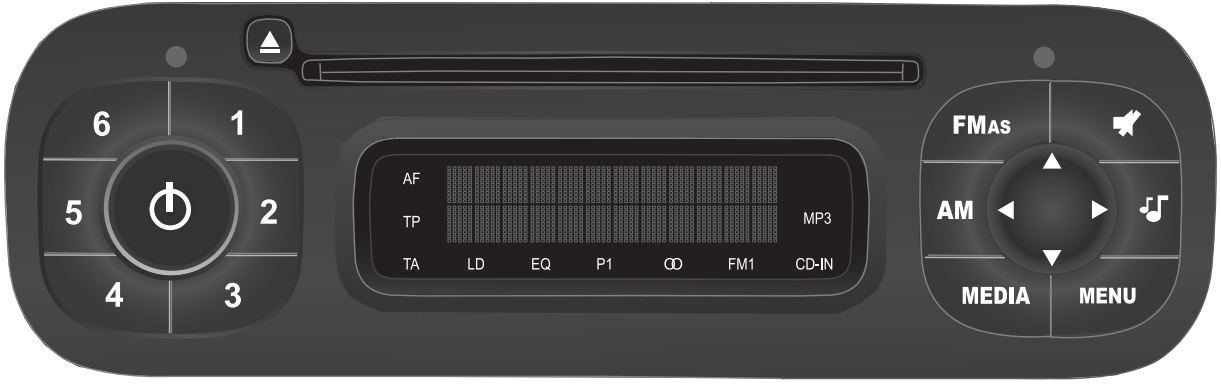

fig. I

F0W0004

General functions

Button	Functions	Mode
⏻	Switching on	short button press
	Switching off	short button press
	Volume adjustment	LH/RH knob rotation
FM AS	FM1, FM2, FM Autostore radio source selection	short cyclical button press
AM	MW1, MW2 radio source selection	short cyclical button press
MEDIA	CD/Media Player source selection (only with **Blue&Me**™) / AUX (only with **Blue&Me**™, for versions/markets, where provided)	short cyclical button press
🔇	Volume activation/deactivation (Mute/Pause)	Short button press
♫	Audio adjustments: low tones (BASS), high tones (TREBLE), RH / LH balance (BALANCE), front / rear balance (FADER)	Menu activation: short button press Selection of type of adjustment: pressing ▲ or ▼ buttons Adjustment of values: pressing ◀ or ▶ buttons.
MENU	Advanced functions adjustment	Menu activation: short button press Selection of type of adjustment: pressing ▲ or ▼ buttons Adjustment of values: pressing ◀ or ▶ buttons.

Radio functions

Button	Functions	Mode
▲▼◀▶	Radio station search: - Automatic search - Manual search	Automatic search: pressing ◀ or ▶ buttons (long press for fast forward) Manual search: pressing ▲ or ▼ buttons (long press for fast forward)
1 2 3 4 5 6	Store current radio station	Long press on keys for preset/memory from 1 to 6
	Stored station recall	Brief press on keys for preset/memory from 1 to 6

CD functions

Button	Functions	Mode
⏏	CD ejection	Short button press
◀▶	Play previous/next track	Short ◀ or ▶ button press
	Fast forwarding/rewinding CD track	Long ◀ or ▶ button press
▲▼	Playing previous/next folder (for CD-MP3)	Short ▲ or ▼ button press

Media Player functions (only with Blue&Me™)

Button	Functions	Mode
▲▼	Select previous/next folder/artist/genre/album depending on the active selection mode	Short button press
◀▶	Play previous/next track	Short button press

STEERING WHEEL CONTROLS
(for versions/markets, where provided)

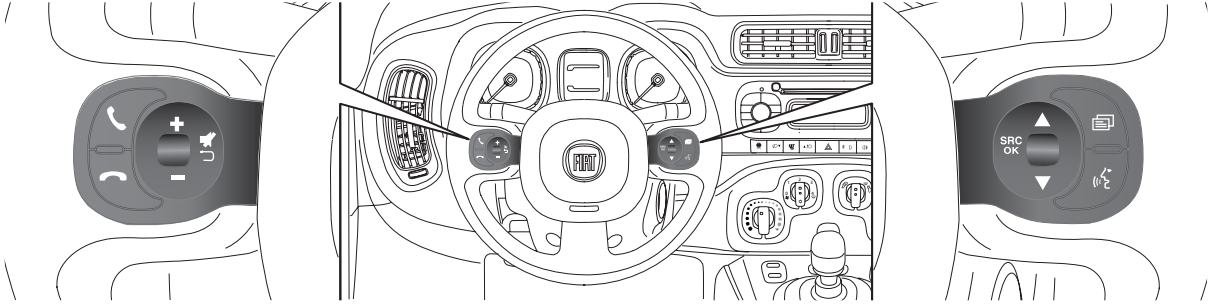

fig. 2 F0W0049

Button	Functions	Mode
🔇	AudioMute on/off (Radio mode) or Pause function (MP3 or Media Player mode only with **Blue&Me**™)	Short button press
+	Increasing volume	Button press
-	Decreasing volume	Button press
SRC	Selection of Radio frequency range (FM1, FM2, FMT, FMA, MW1, MW2) and audio sources; Radio, MP3 or Media Player (only with **Blue&Me**™) /AUX (only with **Blue&Me**™, for versions/markets, where provided)	Button press
▲	Radio: recall stored stations (from 1 to 6) CD/CD MP3: select next track	Button press
▼	Radio: recall stored stations (from 6 to 1) CD/CD MP3: select previous track	Button press

INTRODUCTION

The radio offers the following functions:

Radio section

❒ PLL tuning with FM/AM/MW frequency bands;

❒ RDS (Radio Data System) with TA (traffic alerts) function - TP (traffic programmes) - EON (Enhanced Other Network) - REG (regional programmes);

❒ AF: search selection for alternative frequencies in RDS mode;

❒ provision for emergency alarm;

❒ automatic/manual tuning into stations;

❒ FM Multipath detector;

❒ manual storing of 30 stations: 18 on FM band (6 on FM1, 6 on FM2, 6 on FMT), 12 on MW band (6 on MW1, 6 on MW2);

❒ automatic programming (Autostore function) of 6 stations on dedicated FM band;

❒ SPEED VOLUME function: automatic volume adjustment according to the car speed;

❒ automatic Stereo/Mono selection.

CD section

❒ Direct selection of the disc;

❒ Track selection (forward/back);

❒ Fast advance (forward/back) through tracks;

❒ CD Display function: display of disc name and time elapsed since the start of the track;

❒ Playing of audio CD, CD-R and CD-RW.

Multimedia CDs include data tracks in addition to the audio tracks. Playing this type of CD can cause hissing at a volume that may jeopardise road safety as well as causing damage to the final stages and the speakers.

MP3 CD section

❒ MP3-Info function (ID3-TAG);

❒ Folder selection (previous/next);

❒ Track selection (forward/back);

❒ Fast advance (forward/back) through tracks;

❒ MP3 Display function: display of name of folder, ID3-TAG information, time elapsed since the start of the track, name of the file);

❒ Playing of audio or data CD, CD-R and CD-RW.

Audio section

❒ Mute/Pause function;

❒ Soft-Mute function;

❒ Loudness function;

❒ 7-band graphic equaliser;

❒ Separate bass/treble adjustment;

❒ Right/left channel balance.

Media Player section (only with Blue&Me™)

For the Media Player functions see, the **Blue&Me™** supplement.

AUX section (only with Blue&Me™)
(for versions/markets, where provided)

❒ AUX source selection;

❒ AUX Offset function: alignment of the portable device volume with that of the other sources;

❒ Portable player playback.

FUNCTIONS AND ADJUSTMENTS

SWITCHING ON THE CAR RADIO

The car radio comes on when the button/knob ⏻ (ON/OFF) is pressed briefly.

When the car radio is turned on, the volume is limited to value 20 if it was set to a higher value when previously used or to value 5 if it was previously set to value 0 or to Mute/Pause. The previously set value is maintained in all other cases.

When the radio is switched on with the key extracted from the ignition, it switches off automatically after about 20 minutes. After the radio has switched itself off automatically it can be turned on for a further 20 minutes by pressing the ⏻ (ON/OFF) button/knob.

SWITCHING OFF THE CAR RADIO

Briefly press the ⏻ (ON/OFF) button/knob.

SELECTING THE RADIO FUNCTIONS

By pressing the FM AS button quickly and repeatedly, the following audio sources can be selected cyclically:

❒ TUNER (“FM1”, “FM2”, “FMA”).

By pressing the AM button briefly and repeatedly, the following audio sources can be selected cyclically:

❒ TUNER ("MW1", "MW2").

SELECTING CD FUNCTION

By pressing the MEDIA button briefly it is possible to select the CD function.

AUDIO SOURCE MEMORY FUNCTION

If another function (e.g. the radio) is selected whilst listening to a CD, playback is interrupted and is resumed from the same point when returning to the CD source.

If another function is selected whilst listening to the radio, the last station selected is tuned into when returning to the Radio mode.

VOLUME ADJUSTMENT

Turn the ⏻ (ON/OFF) button/knob to adjust the volume.

If the volume level is changed during the transmission of traffic news, the new setting will only be maintained until the update is finished.

MUTE/PAUSE FUNCTION

(setting volume to zero)

Press the button briefly to activate the Mute function. The volume will gradually decrease and the words "RADIO Mute" will be displayed (in radio mode) or "PAUSE" (in CD mode).

Press the button again to deactivate the Mute function. The volume will gradually increase until it reaches the level previously set.

When the volume level is changed using the dedicated controls, the Mute function is deactivated and the volume is adjusted to the new level selected.

With the Mute function activated, it will be ignored when there is an incoming traffic alert (if the TA function is activated), or if an emergency alarm is received. The function will be reactivated when the alert is over.

AUDIO SETTINGS

The functions in the audio menu differ according to the active source: AM/FM/CD/Media Player (only with **Blue&Me**™) /AUX (only with **Blue&Me**™, for versions/markets, where provided).

Press the ♫ button briefly to change the Audio functions.

After the ♫ button is first pressed, the display will show the bass level value for the source activated at that time (e.g. in FM mode the display will show the wording "FM Bass +2").

Use the ▲ or ▼ buttons to scroll through the menu functions. To change the setting of the function selected use the ◀ or ▶ buttons. The current status of the selected function appears on the display.

The functions managed by the Menu are:

❒ BASS (adjustment of bass tones);

❒ TREBLE (adjustment of high tones);

❒ BALANCE (right/left balance adjustment);

❒ FADER (front/back balance adjustment);

❒ LOUDNESS (LOUDNESS function activation/deactivation);

❒ EQUALISER (activation and selection of factory-set equaliser levels);

❒ USER EQUALISER (customised equaliser setting).

TONE ADJUSTMENT (bass/treble)

Proceed as follows:

❒ Use ▲ or ▼ buttons to set the “Bass” or “Treble” in the AUDIO menu;

❒ press the ◀ or ▶ button to increase/decrease the bass or treble.

By pressing the buttons briefly, the levels will change progressively. By holding them down longer, the levels will change quickly.

BALANCE ADJUSTMENT

Proceed as follows:

❒ Select the "Balance" setting in the AUDIO menu using the ▲ or ▼ button;

❒ press the ▶ button to increase the volume of the right speakers or the ◀ button to increase the volume of the left speakers.

By pressing the buttons briefly, the levels will change progressively. By holding them down longer, the levels will change quickly.

Select the value "◀ 0 ▶ " to set the same level for the right and left audio outputs.

FADER ADJUSTMENT

Proceed as follows:

❒ Select the "Fader" setting in the AUDIO menu using the ▲ or ▼ button;

❒ press the ◀ button to increase the sound from the rear speakers or the ▶ button to increase the sound from the front speakers.

By pressing the buttons briefly, the levels will change progressively. By holding them down longer, the levels will change quickly.

Select the value "◀ 0 ▶ " to set the same level for the front and rear audio outputs.

LOUDNESS FUNCTION

The Loudness function improves the volume of the sound whilst listening at low volumes, increasing the bass and treble.

To activate/deactivate the function, select the Loudness setting of the AUDIO menu using the ▶ or ◀ buttons.

The condition of the function (on or off) is shown on the display for a few seconds by the wording “Loudness On” or “Loudness Off”.

EQ FUNCTION
(equaliser activation/deactivation)

The built-in equaliser can be activated/deactivated. When the equaliser function is off, the audio settings can only be changed by adjusting the “Bass” and “Treble” settings, whereas when the function is on, the acoustic curves can be adjusted. To turn off the equaliser, select the "EQ OFF" function using the ◀ or ▶ buttons.

To turn the equaliser on, use the ◀ or ▶ buttons to select one of the adjustments:

❒ “FM/AM/CD...EQ User” (adjustment of 7 equaliser bands that can be changed by the user);

❒ “Classic” (equaliser preset for optimal classical music sound);

❒ “Rock” (equaliser preset for optimal rock and pop music sound);

❒ "Jazz" (equaliser preset for optimal jazz music sound).

When one of the equaliser settings is activated the letters "EQ" light up.

USER EQ SETTINGS FUNCTION
(equaliser settings only if the USER setting has been selected)

To set a customised equaliser adjustment, move to "User" using the ▲ or ▼ buttons and press the MENU button.

A 7-bar graph appears on the display, in which each bar represents a frequency.

Select the bar to adjust using the ◀ or ▶ buttons; the selected bar will start to flash and it can be adjusted using the ▲ or ▼ buttons.

To store the setting, press the ♫ button again. The display will show the source activated at that time followed by the text “User”. If the mode is “FM” the display will show the text "FM EQ User".

MENU

Menu button functions

Press the Menu function briefly to activate the MENU function. The display will show the first menu item that can be adjusted (AF) ("AF Switching On" on the display).

Use the ▲ or ▼ buttons to scroll through the menu functions. To change the setting of the function selected use the ◀ or ▶ buttons.

The current status of the function selected will be shown on the display.

The functions managed by the Menu are:

❒ AF SWITCHING (ON/OFF);

❒ TRAFFIC INFORMATION (ON/OFF);

❒ REGIONAL MODE regional programmes (ON/OFF);

❒ MP3 DISPLAY (CD MP3 display settings);

❒ SPEED VOLUME (speed-dependent automatic volume control);

❒ RADIO ON VOLUME (maximum radio volume limit activation/deactivation);

❒ SPEECH VOLUME (telephone volume setting);

❒ AUX OFFSET (alignment of the portable device volume to that of the other sources);

❒ RADIO OFF (switching-off mode);

❒ SYSTEM RESET Press the Menu button again to exit the Menu function.

Note

The AF SWITCHING, TRAFFIC INFORMATION and REGIONAL MODE adjustments are only possible in FM mode.

AF SWITCHING function (alternative frequency search)

The radio can operate in two different modes in the RDS system:

❒ "AF Switching On": search for alternative frequencies active (the letters "AF" appear on the display);

❒ "AF Switching Off": search for alternative frequencies not active.

Proceed as follows to activate/deactivate the function:

❒ press the MENU button and select “AF Switching On”;

❒ press the ◀ or ▶ buttons to activate/deactivate the function.

With the function activated, the radio automatically tunes into the station with the strongest signal broadcasting the same programme. While driving, the same station can be continuously listened to without having to change the frequency when you change zones.

Obviously, it must be possible to receive the station that you are listening to in the area you are driving through.

If the AF function is activated, "AF" will light up in the display.

If the AF function has been activated and the radio is not able to receive the current station, the radio activates the automatic search, during which "FM Search" appears on the display (only for top-of-the-range radios).

With the AF function deactivated, the remaining RDS functions, such as the display of the station name, still remain active.

The AF function can only be activated on FM bands.

TRAFFIC INFORMATION function (traffic information)

Some stations on the FM band (FM1, FM2 and FMA) can broadcast information about traffic conditions.

In this case the text "TA" appears on the display.

Proceed as follows to activate/deactivate the TA function:

❒ press the MENU button briefly and select “Traffic info”;

❒ press the ◀ or ▶ buttons to activate/deactivate the function.

If the TA function has been activated, the “TA” icon lights up on the display.

Note

If the TA function is activated with an audio source other than Tuner (Radio) (CD, MP3, telephone or Mute/Pause), the radio can carry out an automatic search and therefore it is possible, when reactivating the Tuner (Radio) source, that the frequency tuned into is different from the one previously set.

With the TA function, it is possible to:

❒ search only for RDS stations that broadcast in FM and are enabled to broadcast traffic information;

❒ receive traffic information even when the CD player is in operation;

❒ receive traffic information at a minimum preset volume even with the radio volume off.

Note

In some countries there are radio stations that, even with the TP function activated, do not transmit traffic information (the icon "TP" appears on the display).

If the radio is tuned to a station in the AM band, when TA is activated it will tune to the last selected station in the FM1 band.

The volume at which the traffic news is transmitted depends on the listening volume:

❒ listening volume below 5: traffic news volume 5 (fixed value);

❒ listening volume above 5: traffic news volume equal to listening volume +1.

If the volume is changed during traffic news, the level will not be shown on the display; the new level will only be maintained during the news.

While traffic information is being received, “TRAFFIC INFORMATION” will appear on the display.

The TA function can be interrupted by pressing any button on the car radio.

REGIONAL MODE function (regional transmission reception)

Some national broadcasters will transmit regional programmes at certain times of the day (that vary from region to region).

This function makes it possible to tune into local (regional) broadcasters automatically (see "EON function" paragraph).

If you want the radio to automatically tune into the regional stations being broadcast on the selected network, the function must be activated.

To activate/deactivate the function use the ◀ or ▶ buttons.

The current status of the function appears on the display:

❒ "Regional On": function activated;

❒ "Regional Off": function deactivated.

If the function is deactivated and you have tuned into a regional station working in a given area and you enter a different area, then the regional station received in the new area will be broadcast.

Note

If the AF and REG functions are on at the same time, once a border between two regions is crossed, the radio may not switch correctly to a valid alternative frequency.

MP3 DISPLAY function (MP3 CD data display)

This function makes it possible to select the information shown by the display when listening to a CD containing MP3 tracks.

The function can only be selected if an MP3 CD is inserted: in this case "MP3 Display" will appear on the display.

To change the function, use the ◀ or ▶ buttons.

The following settings are available:

❒ "Title" (track title, if the ID3-TAG is available);

❒ "Author" (track author, if ID3-TAG is available);

❒ "Album" (track album, the ID3-TAG if available);

❒ "Folder" name (name assigned to the folder);

❒ "File" name (name assigned to the MP3 file).

SPEED VOLUME function (speed-based volume change)

This function automatically adapts the volume level to the speed of the car, increasing the volume when the speed increases to maintain the ratio with the noise level inside the passenger compartment.

To turn the function on/off, press the ◀ / ▶ buttons. The words "Speed volume" appear on the display, followed by the current status of the function:

❒ Off: function deactivated

❒ Low: function activated (low setting)

❒ High: function activated (high setting).

RADIO ON VOLUME function (maximum radio volume limit activation/deactivation)

This function makes it possible to activate/deactivate the maximum volume limit when the radio is turned on.

The display shows the function status:

❒ "Radio on vol – Limit on": when the radio is switched on the volume level will be: – if the volume level is equal to or higher than the maximum value, the radio will come on at the maximum volume;

– if the volume level is between the minimum and maximum values, the radio will come on at the same volume as before it was switched off

– if the volume level is equal to or lower than the minimum value, the radio will come on at the minimum volume.

❒ "Radio on vol – Limit off": the radio will come on at the volume level it was at before switching off. The volume level can be between 0 and 40.

To change the setting of the selected function, use the ◀ / ▶ buttons.

NOTES

❒ Using the Menu it is only possible to adjust the activation/deactivation of the function and not the minimum or maximum volume value.

❒ If the "TA" or "TEL" functions or an external audio source are activated when the radio is turned on, the radio will come on at the volume set for these sources. The volume can be adjusted between the minimum and the maximum level, by deactivating the external audio source.

❒ If the battery charge is low, it will not be possible to adjust the volume between the minimum and maximum levels.

SPEECH VOLUME function (telephone volume setting)

By turning the ⏻ (ON/OFF) button/knob or pressing the ◀ / ▶ buttons, this function allows the volume to be adjusted (settings from 1 to 40) or to be excluded (OFF setting) for the Telephone and **Blue&Me**™ (except the Media Player function).

The display shows the current function status:

❒ "Speech Off": function deactivated.

❒ “Speech volume 23”: function active with volume setting 23.

AUX OFFSET function (alignment of the portable device volume with that of the other sources)

This function enables the alignment of the volume of the AUX source, depending on its own portable player, with that of the other sources.

To activate the function, press the MENU button and select “AUX offset”.

Press the buttons ◀ or ▶ to decrease or increase the volume value (set from – 6 to + 6).

RADIO OFF function (on and off mode)

This function is used to set the radio turning off mode to one of two different settings. To turn the function on, use the ◀ or ▶ buttons.

The chosen mode appears on the display:

❒ "00 MIN": the radio turns off automatically in connection with the ignition key; the radio turns off automatically as soon as the key is turned to the STOP position;

❒ "20 MIN": the radio turns off independently of the ignition key; the radio remains switched on for a maximum period of 20 minutes after the key has been turned to the STOP position.

SYSTEM RESET function

This function is used to restore all settings to the factory values.

The options are:

❒ NO: no restore intervention;

❒ YES: the default parameters will be restored. During this operation, the text “Resetting” appears on the display. At the end of the operation, the source does not change and the previous situation will be displayed.

PHONE SET-UP

If a hands-free kit is installed on the car, when there is an incoming phone call the radio audio will be connected to the telephone output. The incoming telephone sound always arrives at a fixed volume, but it can be adjusted during the conversation using the ⏻ ON/OFF button/knob.

The fixed telephone audio volume can be adjusted using the "SPEECH VOLUME" function in the Menu. The text “PHONE” appears on the display during the telephone audio deactivation.

ANTI-THEFT PROTECTION

The radio is equipped with an anti-theft protection system based on the exchange of information between the radio and the electronic control unit (Body Computer) on the car.

This system guarantees maximum safety and prevents the secret code from being entered each time the radio power supply is disconnected.

If the check has a positive outcome, the radio will start to function, whereas if the comparison codes are not the same or if the electronic control unit (Body Computer) is replaced, the device will ask the user to enter the secret code according to the procedure described in the paragraph below.

Entering the secret code

When the radio is switched on, if the code is requested, the display will show "Radio code" for about 2 seconds followed by four dashes "- - - -".

The code is made up of four numbers from 1 to 6, each corresponding to one of the dashes.

To enter the first digit of the code, press the corresponding button of the pre-selected stations (from 1 to 6). Enter the other code digits in the same way.

If the four digits are not entered within 20 seconds, the display will show "Enter code - - - -". If this occurs, it is not considered an incorrect code entry.

After entering the fourth digit (within 20 seconds), the car radio will start to work.

If an incorrect code is entered, the radio will emit a sound and the display shows the text "Radio blocked/wait" to notify the user of the need to enter the correct code.

Each time the user enters an incorrect code, the waiting time will gradually increase (1 min, 2 min, 4 min, 8 min, 16 min, 30 min, 1 h, 2 h, 4 h, 8 h, 16 h, 24 h) up to a maximum of 24 hours.

The waiting time will be shown on the display with the text "Radio blocked/wait". After the text has disappeared it is possible to start the code entering procedure again.

Car radio passport

This document certifies the ownership of the car radio. The car radio passport shows the radio model, serial number and secret code.

Note

Keep the car radio passport in a safe place so that you can give the information to the relevant authorities if the car radio is stolen.

In case of loss of the car radio passport, contact the Fiat Dealership, taking an ID document and the car ownership documents.

RADIO (TUNER)

INTRODUCTION

When the radio is switched on, the last function selected before it was switched off is activated: Radio, CD, CD MP3 or Media Player (only with **Blue&Me**™) or AUX (only with **Blue&Me**™, for versions/markets, where provided).

To select the Radio function when another audio source is being listened to, briefly press the FM AS or AM buttons depending on the desired band.

Once the Radio mode has been activated, the display will show the name (RDS stations only) and the frequency of the selected radio station, the frequency band selected (e.g. FM1) and the preselect button number (e.g. P1).

FREQUENCY BAND SELECTION

With the Radio mode active, press the FM AS or AM button briefly and repeatedly to select the desired reception band.

Each time the button is pressed the following bands are selected cyclically:

❒ By pressing the FM AS button: “FM1”, “FM2” or “FMA”;

❒ By pressing the AM button: “MW1, MW2”.

Each band is highlighted by the name in the display. The last station selected on the respective frequency band will be tuned into.

The FM band is divided into sections: FM1, FM2 or "FMA"; the FMA reception band is reserved for broadcasters stored automatically using the Autostore function.

PRESET BUTTONS

The buttons numbered from 1 to 6 are used to set the following preset stations:

❒ 18 in the FM band (6 in FM1, 6 in FM2, 6 in FMT or "FMA" (on some versions);

❒ 12 in the MW band (6 in MW1, 6 in MW2).

To listen to a preset station, select the desired frequency band and then briefly press the corresponding preset button (from 1 to 6).

By pressing the preset button for more than 2 seconds, the tuned station will be stored. The storing phase is confirmed by an acoustic signal.

STORING THE LAST STATION LISTENED TO

The radio automatically stores the last station that was selected for each reception band, which is then tuned into when the radio is turned on or when the reception band is changed.

AUTOMATIC TUNING

Briefly press the ◀ or ▶ button to start the automatic tuning search for the next station that can be received in the selected direction.

If the ◀ or ▶ button is pressed down longer, the fast search starts. When the button is released, the tuner will stop on the next station that can be received.

If the TA function (traffic alerts) is on, the tuner will only search for stations that broadcast traffic news.

MANUAL TUNING

This is used to manually search for stations in the preselected band.

Select the desired frequency band and then press the or ▼ button briefly and repeatedly to start the search in the desired direction.

If the or ▼ buttons are pressed longer, the fast search will start and then stop when the button is released.

AUTOSTORE FUNCTION (automatic station storing)

To activate the Autostore function, hold the FM AS button down until a beep is heard. With this function, the radio automatically stores the 6 stations with the strongest signal in a decreasing order on the FMA frequency band.

During the automatic storing process, the text "Autostore" flashes on the display.

Press the FM AS button again to stop the Autostore function: the radio will again tune into the station listened to before the activation of the function.

When the Autostore function has finished, the radio automatically tunes into the first preselected station on the FMA band on the preset side 1.

The stations that have a strong signal at that moment are then automatically stored in the preselected band on the buttons numbered 1 to 6.

When the Autostore function is activated within the MW band, the FMA band is automatically selected and the function is performed there.

Note

Sometimes the Autostore function is not able to find 6 stations with a strong signal. In this case, the strongest stations stored will be duplicated in the free preset buttons.

Note

When the Autostore function is activated, the stations that were previously stored in the FMA band are deleted.

EMERGENCY ALARM RECEPTION

The radio is configured to receive emergency alerts in RDS mode in exceptional circumstances or where dangerous situations are present (earthquakes, floods, etc.) if these are being transmitted by the current broadcaster.

This function is activated automatically and cannot be turned off.

The word “Alarm” will be shown in the display during the transmission of an emergency announcement. The volume of the radio changes during this announcement in the same way as during traffic news.

EON FUNCTION (Enhanced Other Network)

In some countries, there are circuits that group multiple broadcasters that transmit traffic information together. In this case, the programme of the station that is being listened to will be temporarily interrupted to:

❒ receive traffic alerts (only with the TA function activated);

❒ listen to regional transmissions each time these are broadcast by one of the broadcasters on the same circuit.

STEREOPHONIC BROADCASTERS

If the incoming signal is weak, the reproduction is automatically switched from Stereo to Mono.

CD PLAYER

INTRODUCTION

This section describes the variants regarding the operation of the CD player: as far as the operation of the radio is concerned, refer to the description in the "Functions and Adjustments" chapter.

SELECTING THE CD PLAYER

To activate the CD player built into the equipment, proceed as follows:

❒ insert a CD with the equipment switched on: the first track will start to play;

or

❒ if a CD has already been loaded, turn on the car radio and then briefly press the CD button to select the “CD” operating mode: the last track listened to will start to play.

It is advisable to use original CDs to ensure optimum playback. If CD-R/RWs are used, we recommend using good quality media that are burnt at the slowest speed possible.

LOADING/EJECTING A CD

To load the CD, insert it gently into the slot to activate the motorised loading system, which will position it correctly.

The CD can be loaded with radio off and the ignition key turned to MAR: in this case the radio will remain off. When the radio is turned on, the last source listened to before being switched off will be activated.

When a CD is inserted the display will show the symbol "CD-IN" and the text "CD Reading". They will remain displayed for the entire time required for the radio to read the CD tracks. When this time has elapsed the radio automatically starts playing the first track.

Press the ▲ button (EJECT) with the radio on to activate the motorised ejection of the CD. After ejection, the last audio source listened to before playing the CD will be heard.

WARNING

Do not inadvertently press the eject button when inserting a CD.

If the CD is not removed from the radio, it will automatically be reloaded about 20 seconds later and the Tuner mode will be activated (Radio).

The CD cannot be ejected if the car radio is off.

If the ejected CD is reloaded without having removed it completely from the slot, the radio will not switch to the CD source.

Possible error messages

If the CD loaded cannot be read (e.g. a CD ROM has been inserted or the CD is inserted the wrong way round or there is a reading error) the display will show the words "CD error".

The CD will then be ejected and the audio source activated prior to the CD mode selection will be heard.

With an external audio source activated ("TA", "ALARM" and "Phone"), the CD that cannot be read will not be ejected until these functions have ended. At the end, with the CD mode activated, the display will show the text "CD error" for a few seconds and then the CD will be ejected.

If the CD player overheats CD playback could be temporarily interrupted. The radio will automatically switch to the Radio (Tuner) mode and the display will show “CD hot” and then “CD error”.

DISPLAY INFORMATION

When the CD player is in operation, information appears on the display with the following meanings:

❒ "CD Track 5": indicates the number of the CD track;

❒ "03.42": indicates the time elapsed since the start of the track (if the relevant Menu function is activated).

TRACK SELECTION (forward/backward)

Briefly press the ◀ button to play the previous CD track and the ▶ button to play the next track.

The tracks are selected cyclically: the first track is selected after the last track and vice versa.

If the track has been played for more than 3 seconds, pressing the ◀ button will cause the track to be started again from the beginning.

In this case, if you want to play the previous track, press the button twice consecutively.

TRACK FAST FORWARD/REWIND

Keep the ▶ button pressed down to fast forward the selected track and hold the ◀ button down to fast rewind the track.

The fast forward/rewind will stop once the button is released.

PAUSE FUNCTION

To pause the CD player, press the button. The text “CD Pause” appears on the display.

To resume listening to the track, press the button again. If another audio source is selected, the pause function is turned off.

CD MP3 PLAYER

INTRODUCTION

This chapter only describes the variants regarding the operation of the CD MP3 player: as far as the operation of the radio is concerned, refer to the description in chapters "Radio" and "CD MP3 Player".

NOTE MPEG Layer-3 audio decoding technology licensed from Fraunhofer IIS and Thomson multimedia.

MP3 MODE

In addition to playing regular audio CDs, the radio is also able to play CD-ROMs on which audio files have been stored using the MP3 compression format. The radio operates as described in the "CD Player" chapter when an ordinary audio CD is inserted.

To guarantee optimal playback quality it is advisable to use good quality CDs mastered at the lowest speed possible.

The files on an MP3 CD are structured by folder, creating lists of all the folders containing MP3 tracks (folders and subfolders are all displayed on the same level); the folders that do not contain MP3 tracks cannot be selected.

The operating conditions and specifications for playing MP3 files are as follows:

❒ the CD-ROMs used should be burnt according to the ISO 9660 standard;

❒ the music files must have an ".mp3" extension: files with a different extension cannot be played;

❒ the following sampling frequencies can be played: 44.1 kHz, stereo (96 to 320 kbit) - 22.05 kHz, mono or stereo (32 to 80 kbit);

❒ tracks with a variable bit-rate can be reproduced.

Note

The names of tracks must not contain the following characters: spaces, ' (apostrophes), (and) (open and close brackets). During the burning of a MP3 CD, make sure that the names of the files do not contain these characters; if they do, the radio will not be able to play the tracks involved.

SELECTING MP3 SESSIONS ON HYBRID DISCS

If a hybrid disc is inserted (Mixed Mode, Enhanced, CD-Extra) also containing MP3 files, the radio automatically starts playing the audio session. It is possible to switch to the MP3 session whilst playing by holding the MEDIA button down for more than 2 seconds.

Note

When the function is activated the radio may take a few seconds to start playing. Whilst checking the disc the display will show "CD Reading". If no MP3 files are detected, the radio will resume playing the audio session from the point where it was interrupted.

DISPLAY INFORMATION

ID3-TAG information display

In addition to the information relating to the time elapsed, the name of the folder and the name of the file, the radio is also capable of displaying ID3-TAG information relating to the Track Title, Artist and Author.

The name of the MP3 folder shown on the display corresponds to the name with which the folder was stored on the CD, followed by an asterisk.

Example of a complete MP3 folder name: BEST OF *.

When ID3-TAG data is chosen to be displayed (Title, Artist, Album) that has not been recorded for the track played, the information will be replaced by that relating to the name of the file.

SELECTING NEXT/PREVIOUS FOLDER

Press the ▲ button to select one of the next folders or press the ▼ button to select a previous folder.

The display will show the number and the name of the folder (e.g. "DIR 2 XXXXXX").

XXXXXX: name of the folder (the display will only show the first 8 characters).

The folders are selected cyclically: the first folder is selected after the last folder and vice versa.

If no other folder/track is selected in the next 2 seconds, the first track on the new folder will be played.

If the last track in the folder at that moment selected is played, the next folder will be played.

STRUCTURE OF THE FOLDERS

The radio with MP3 player:

❒ recognises only the folders that contain MP3 format files;

❒ if the MP3 files on a CD-ROM are structured in "sub-folders", their structure is compressed to a single level structure where the "sub-folders" are taken to the level of the main folders.

AUX
(only with the Blue&Me™ system)
(for versions/markets, where provided)

INTRODUCTION

This section describes the variants regarding the operation of the AUX source: as far as the operation of the radio is concerned, refer to the description in the "Functions and Adjustments" chapter.

AUX MODE

To activate the AUX source, press the MEDIA button or the SRC control on the steering wheel several times until the corresponding source is displayed.

IMPORTANT

The functions of the device connected to the AUX socket are directly managed by the device itself; it is not possible to change track/folder/playlist with radio or steering wheel controls.

Do not leave the cable of your portable player connected with the AUX socket after disconnection, to avoid possible hiss from the speakers.

NOTE The AUX socket is not incorporated in the radio. For its position, refer to the **Blue&Me**™ Supplement and its Quick Guide.

TROUBLESHOOTING

GENERAL

Low volume

The Fader function should be adjusted only to the values "F" (front) to prevent a reduction in radio output power and the muting of the volume if the Fader level adjustment is equal to R+9.

Source cannot be selected

Nothing has been inserted.

Insert the CD or CD MP3 to be played.

CD PLAYER

The CD does not play

The CD is dirty. Clean the CD.

The CD is scratched. Try using another CD.

The CD cannot be loaded

A CD is already loaded. Press the ▲ button and remove the CD.

MP3 FILE READING

Track skips during MP3 file playback

The CD is scratched or dirty. Clean the CD, referring to the description in the paragraph “CD” in the chapter “PRESENTATION”.

The duration of the MP3 tracks is not shown correctly

In some cases (due to the recording mode) the duration of the MP3 tracks may be displayed incorrectly.

SELENIA®

In the heart of your engine.

Always ask your mechanic for SELENIA®

Oil change? The experts recommend Selenia

*The engine of your car is factory filled with **Selenia**.*
*This is an engine oil range which satisfies the most advanced international specifications. Its superior technical characteristics allow **Selenia** to guarantee the **highest performance and protection of your engine.***

The Selenia range includes a number of technologically advanced products:

SELENIA K PURE ENERGY
Synthetic lubricant designed for latest generation, low emission, petrol engines. Its specific formulation warrants the utmost protection also for high performance turbocharged engines with high thermal stress.
Its low ash content helps to maintain the total cleanliness of modern catalysts.

SELENIA WR PURE ENERGY
Fully synthetic lubricant that can meet the requirements of the latest diesel engines. Low ash content to protect the particulate filter from the residual products of combustion.
High Fuel Economy System that allows considerable fuel saving.
It reduces the danger of dirtying the turbine to ensure the protection of increasingly high performance diesel engines

SELENIA MULTIPOWER
Particularly ideal for the protection of new generation petrol engines, very effective even in the most severe weather conditions. It guarantees a reduction in fuel consumption (Energy conserving) and it is also ideal for alternative engines.

SELENIA SPORT
Fully synthetic lubricant capable of meeting the needs of high performance engines.
Studied to protect the engine also in high thermal stress conditions, it prevents deposits on the turbine to achieve the utmost performance in total safety.

The range also includes Selenia StAR Pure Energy, Selenia Racing, Selenia K, Selenia WR, Selenia 20K, Selenia 20K AR. For further information on Selenia products visit the web site www.selenia.com.

NOTES

INDEX

ABS 78
Air Bag
– Deactivation of passenger front air bag and side bag 122
– side bag 122
– window bag 123
Air Bags 120
Air cleaner 195
Ashtray 57
ASR system 80
ASR (system) 80
Automatic climate control 38
– controls 38
– maintenance 45

Battery 196
– advice for extending lifetime 196
– replacement 196
Battery (recharging) 176
Bodywork
– bodywork codes 208
– maintenance 202
– protection against atmospheric agents 202
– warranty 202
Bodywork versions 208
Bonnet 73
Brake Assist system 82
Brake Assist (system) 82
Brake (mechanical wear detection system) 197
Brakes
– brake fluid level 194
– specifications 211
bulb replacement 164-165
Bulb replacement
– exterior lights 162
– interior lights 168
Bulbs
– bulbs (replacement) 158
– general instructions 158
– types of bulbs 160

Car dimensions 218
Carrying children safely 111
– Carrying children safely 111
– child seats 119
Central air diffusers 32
Changing a wheel 148
Checking levels .. 189-190-191-192
Children (safe transport)
– "Isofix" child seat setup 116
Child seats (compliance for use) 115
City Brake Control - "Collision Mitigation" System 87
CITY function 94
Cleaning and maintenance
– bodywork 202
– car interior 204
– engine compartment 203
– front headlights 203
– Plastic and coated parts 204
– seats 204
– windows 203
Climate control 32
– Passenger compartment air diffusers 33
Climatic comfort 33
Clutch 211
CO2 emissions 228
Conditions of use 132
Control panel and instruments 4
Controls 53

Daytime running lights (DRL)
– "Daytime Running Lights".... 46
Diesel filter..... 195
Dipped beam headlights
– control..... 47
Dipped headlights
– control..... 47
Direction indicators
– bulb replacement..... 163
– control..... 48
Display..... 7
– Control buttons..... 8
Doors..... 62
– door locking/unlocking..... 62
DPF (Diesel Particulate Filter)..... 102
DPF filter..... 102
Driving style..... 131
DRL (Daytime Running Lights)..... 46
Dualdrive (electric power steering)..... 94
Dualdrive electric power steering..... 94
Electric windows..... 65
Engine codes..... 208
Engine compartment
– checking fluid levels..... 188
– opening/closing..... 73
– washing..... 203
Engine coolant temperature gauge..... 6
Engine
– Engine cooling system fluid level..... 194
– identification codes..... 208
– marking..... 207
– technical specifications..... 209
Engine oil
– consumption..... 193
– level check..... 193
– specifications..... 224
Environment protection..... 102
EOBD system..... 91
EOBD (system)..... 91
ESC system..... 79
Exterior lights..... 46
Extinguisher..... 58
Fiat CODE (system)..... 18
Filling the tank..... 99
Fitting "Universal" child seat... 112
FIX&GO automatic kit..... 153
Fluids and lubricants (specifications)..... 224
Fog lights..... 164
Follow me home (device)..... 48
Front
– Air Bags..... 120
Front roof light
– bulb replacement..... 168
– control..... 51
Fuel consumption..... 227
Fuel level gauge..... 6
Fuel reserve..... 222
Fuel supply..... 210
Fuse boxes (location)..... 172
Fuses
– Dashboard fuse box..... 173
– Engine compartment fuse box..... 172
– fuse list..... 174
– replacing fuses..... 170
Gearbox (using the)..... 130

Gear Shift Indicator (system) 7

Handbrake 129
Hazard warning lights 53
Headlights - fog light alignment 77
Headlights 76
– adjusting headlights abroad 77
– bulb replacement 162
– headlight alignment corrector 76
– light beam direction 76
Head restraints 27
Hill Holder system 80

Identification data
– bodywork paint plate 207
– chassis marking 207
– engine marking 207
– identification data plate 206
Ignition device 22
Instrument panel 3-4
Interior fittings 56
Interiors (cleaning) 204
"Isofix" child seat setup 116

Jack 150

Keys
– key without remote control 19
– key with remote control 20
– replacing remote control battery 21
– request for additional remote controls 21
Key with remote control (replacing the battery) 21
Knowing your car 3
– Display 9
– Luggage compartment (capacity) 218

Light clusters
– front light clusters (changing a bulb) 162
– rear light clusters (changing a bulb) 165
Load limiters 108
Lubricants (specifications) 224
Luggage compartment 66
Luggage compartment roof light
– bulb replacement 170

Main beam headlights – control 47
Main/dipped beam headlights
– bulb replacement 162
Main/dipped beam (headlights)
– bulb replacement 162
Manual climate control 34
– maintenance 37
Manual window winders 66
Mechanical Brake Assist 79
Menu items 10
MSR system 78
Multifunction display 7

Number plate lights
– bulb replacement 167

On-board instruments
– engine coolant temperature gauge 6
– Fuel level gauge 6
– multifunction display 4
– On-board instruments 4
– rev counter 6
– Speedometer 6

Parking 129

Parking lights 47
Parking sensors 92
Passenger side glove compartment 56
Performance (top speed) 220
Plugs (type) 209
Pollen filter 195
Power socket 56
Preparation to install a portable navigation system 97
Pretensioners 107
Protecting the environment 102

Raising the car 178
Rear fog lights 166
Rear roof light
– bulb replacement 169
Rear view mirrors 29
Rear window washer jets 201
Rear window washer 50
– rear window washer fluid level 194
Rear window wiper 50
– blade replacement 200
– blades 199
– level check 189-190-191-192

Refuelling
– capacities table 222
Refuelling the car 98-99
Replacing fuses 170
Rev counter 6
Rim protector 217
Rims
– wheels and tyres 198
Roof lights
– front roof light 51
– luggage compartment roof light 53
Roof rack/ski rack 75
Safety 103
– carrying children safely 111
– "Isofix" child seat (fitting) 116
– seat belts 103
Saving fuel 131
SBR system 105
Scheduled Servicing Plan 182
Seat belts
– load limiters 108
– maintenance 110
– pretensioners 107
– SBR system 105
– using the seat belts 103

Seats 23
– Adjusting the seats 23
Sensors
– parking 92
Servicing and care 181
– heavy-duty use of the car 187
– periodic checks 187
– scheduled servicing 181
– scheduled servicing plan 182
Side air diffusers 32
Side Bag 122
Side
– bags 122
Snow chains 135
Sound system (wiring) 95
Speedometer 6
Speedometer (speed indicator) 6
Starting the engine 126-147
Starting up and driving 126
Start&Stop system 83
Start&Stop (system) 83
Steering lock 23
Steering system 212
Steering wheel 28

Steering wheel stalks
– left stalk 46
Storing the car 135
Sun roof 59
Sun visors 57
Suspension 212

Technical data 206
Third brake lights 165
Top speed 220
Towing the car 178
Towing trailers 133
Traction Plus system 82
Transmission 211
TRIP button 17
Trip computer
– TRIP button 17
– Trip Computer 16
– Trip Computer values 16
Tyres
– FIX&GO automatic (kit) 153
– inflation pressure 216
– reading the tyre code 213
– Rim Protector tyres 217
– snow tyres 214
– tyres provided 214
Tyres - maintenance 198

"Universal" child seat fitting ... 119

Universal Isofix (child seat) 116
Using the gearbox 130

Warning lights on panel 136
Weights and loads 221
Wheel rims
– correct reading of the rim code 214
– dimensions 214
– rim protector 217
– rims and tyres 213
Wheels and tyres
– changing a wheel 148
– FIX&GO automatic (kit) 153
– spare wheel 213
– tyre inflation pressure 216
– Wheels and tyres 198
Window bag 123
Window cleaning 49
Windows (cleaning) 203
Windscreen washer
– windscreen washer fluid level 194
Windscreen washer sprays 201
Windscreen wiper 49
– blades 199
– level check 189-190-191-192
– replacing wiper blades 200
Wiring for radio system 95

Fiat Group Automobiles S.p.A. - Parts & Services - Technical Services - Service Engineering
Largo Senatore G. Agnelli, 3 - 10040 Volvera - Torino (Italia)
Print no 603.99.249 - 09/2012 - 1 Edition

SAFETY

⚠ The bonnet, the bumper and the headlamps of this vehicle have been developed as integral part of the passive safety systems of your car to ensure an optimum protection to pedestrians and to all passengers. For this, in case of replacement, be sure to choose genuine parts of the bodywork which are specifically developed for your car.

ENGLISH

The data contained in this publication is intended merely as a guide. FIAT reserves the right to modify the models and versions described in this booklet at any time for technical and commercial reasons.
If you have any further questions please consult your FIAT dealer.
Printed in recycled paper without chlorine.