2016

Cadillac

CT6

cadillac.com (U.S.)
cadillac.gm.ca (Canada)

Contents

Introduction 2
In Brief 5
Keys, Doors, and Windows 28
Seats and Restraints 57
Storage 106
Instruments and Controls 109
Lighting 170
Infotainment System 177
Climate Controls 178
Driving and Operating 191
Vehicle Care 261
Service and Maintenance 342
Technical Data 357
Customer Information 361
Reporting Safety Defects 371
OnStar 375
Index 385

Introduction

The names, logos, emblems, slogans, vehicle model names, and vehicle body designs appearing in this manual including, but not limited to, GM, the GM logo, CADILLAC, the CADILLAC Emblem, and CT*6* are trademarks and/or service marks of General Motors LLC, its subsidiaries, affiliates, or licensors.

For vehicles first sold in Canada, substitute the name “General Motors of Canada Company” for Cadillac Motor Car Division wherever it appears in this manual.

This manual describes features that may or may not be on the vehicle because of optional equipment that was not purchased on the vehicle, model variants, country specifications, features/applications that may not be available in your region, or changes subsequent to the printing of this owner manual.

Refer to the purchase documentation relating to your specific vehicle to confirm the features.

Keep this manual in the vehicle for quick reference.

Canadian Vehicle Owners

A French language manual can be obtained from your dealer, at www.helminc.com, or from:

Propriétaires Canadiens

On peut obtenir un exemplaire de ce guide en français auprès du concessionnaire ou à l'adresse suivante:

Helm, Incorporated
Attention: Customer Service
47911 Halyard Drive
Plymouth, MI 48170
USA

Using this Manual

To quickly locate information about the vehicle, use the Index in the back of the manual. It is an alphabetical list of what is in the manual and the page number where it can be found.

Danger, Warning, and Caution

Warning messages found on vehicle labels and in this manual describe hazards and what to do to avoid or reduce them.

Litho in U.S.A.
Part No. 22988376 A First Printing

©2015 General Motors LLC. All Rights Reserved.

⚠ Danger

Danger indicates a hazard with a high level of risk which will result in serious injury or death.

⚠ Warning

Warning indicates a hazard that could result in injury or death.

Caution

Caution indicates a hazard that could result in property or vehicle damage.

A circle with a slash through it is a safety symbol which means “Do Not,” “Do not do this,” or “Do not let this happen.”

Symbols

The vehicle has components and labels that use symbols instead of text. Symbols are shown along with the text describing the operation or information relating to a specific component, control, message, gauge, or indicator.

: Shown when the owner manual has additional instructions or information.

: Shown when the service manual has additional instructions or information.

: Shown when there is more information on another page — “see page.”

Vehicle Symbol Chart

Here are some additional symbols that may be found on the vehicle and what they mean. For more information on the symbol, refer to the Index.

: Airbag Readiness Light

: Air Conditioning

: Air Conditioning Refrigerant Oil

: Antilock Brake System (ABS)

: Audio Steering Wheel Controls or OnStar® (if equipped)

: Brake System Warning Light

: Certified Technician

: Charging System

: Cruise Control

: Do Not Puncture

: Do Not Service

: Engine Coolant Temperature

: Exterior Lamps

: Flame/Fire Prohibited

: Flammable

: Fuel Gauge

: Fuses

: Headlamp High/Low-Beam Changer

: Heated Steering Wheel

: LATCH System Child Restraints

: Malfunction Indicator Lamp
: Oil Pressure
: Power
: Remote Vehicle Start
: Safety Belt Reminders
: Start/Stop
: Tire Pressure Monitor
: Traction Control/StabiliTrak®
: Under Pressure
: Windshield Washer Fluid

In Brief

Instrument Panel

Instrument Panel Overview 6

Initial Drive Information

Initial Drive Information 8
Stop/Start System 8
Remote Keyless Entry (RKE) System 8
Remote Vehicle Start 9
Door Locks 9
Trunk 10
Windows 10
Seat Adjustment 10
Memory Features 12
Second Row Seats 13
Heated and Ventilated Seats . . . 14
Head Restraint Adjustment 14
Safety Belts 15
Passenger Sensing System . . . 15
Mirror Adjustment 15
Steering Wheel Adjustment 16
Interior Lighting 16
Exterior Lighting 17
Windshield Wiper/Washer 18
Climate Controls 19
Transmission 20

Vehicle Features

Infotainment System 20
Steering Wheel Controls 20
Cruise Control 20
Driver Information Center (DIC) 21
Forward Collision Alert (FCA) System 21
Night Vision System 21
Front Automatic Braking (FAB) System 22
Front Pedestrian Braking (FPB) System 22
Lane Keep Assist (LKA) 22
Lane Change Alert (LCA) 22
Surround Vision 22
Rear Vision Camera (RVC) 23
Rear Cross Traffic Alert (RCTA) System 23
Parking Assist 23
Automatic Parking Assist (APA) 23
Rear Automatic Braking (RAB) System 23
Surround Vision Recorder 24
Power Outlets 24
Universal Remote System 24
Sunroof 24

Performance and Maintenance

Traction Control/Electronic Stability Control 25
Tire Pressure Monitor 26
Engine Oil Life System 26
Driving for Better Fuel Economy 27
Roadside Service 27

Instrument Panel

Instrument Panel Overview

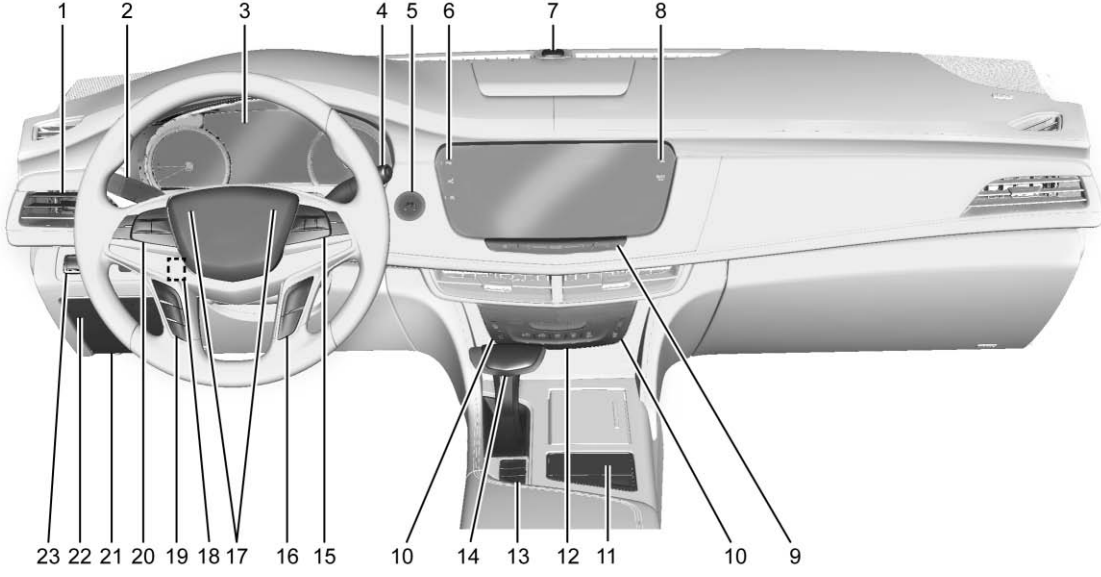

1. *Air Vents* ⇨ *189*.
2. *Exterior Lamp Controls* ⇨ *170*.

   Turn Signal Lever. See *Turn and Lane-Change Signals* ⇨ *173*.
3. *Instrument Cluster (Uplevel)* ⇨ *121* or *Instrument Cluster (Base Level)* ⇨ *118*.

   Driver Information Center (DIC) Display. See *Driver Information Center (DIC)* ⇨ *140*.
4. *Windshield Wiper/ Washer* ⇨ *111*.
5. ENGINE START/STOP Button. See *Ignition Positions* ⇨ *202*.
6. Parking Assist Button. See *Assistance Systems for Parking or Backing* ⇨ *231*.

   Automatic Parking Assist (APA) Button. See *Assistance Systems for Parking or Backing* ⇨ *231*.

   Automatic Engine Start/Stop Disable Switch. See *Starting the Engine* ⇨ *204*.
7. Light Sensor. See *Automatic Headlamp System* ⇨ *172*.
8. *Hazard Warning Flashers* ⇨ *173*.

   Glove Box Button. See *Glove Box* ⇨ *106*.
9. *Infotainment* ⇨ *177*.
10. *Heated and Ventilated Front Seats* ⇨ *64* (If Equipped).
11. Infotainment Touch Pad. See the infotainment manual.
12. *Automatic Climate Control System (Quad Zone)* ⇨ *178* or *Automatic Climate Control System (Dual Zone)* ⇨ *185*.
13. *Automatic Vehicle Hold (AVH)* ⇨ *217*.

    MODE Button. See *Driver Mode Control* ⇨ *219*.

    Traction Control/Electronic Stability Control ⇨ *217*.
14. Shift Lever. See *Automatic Transmission* ⇨ *210*.
15. Driver Information Center (DIC) Controls. See *Driver Information Center (DIC)* ⇨ *140*.
16. Steering Wheel Controls. See the infotainment manual.
17. *Horn* ⇨ *111*.
18. *Steering Wheel Adjustment* ⇨ *110* (Out of View).
19. *Forward Collision Alert (FCA) System* ⇨ *237* (If Equipped).

    Lane Keep Assist (LKA) ⇨ *248* (If Equipped).

    Heated Steering Wheel ⇨ *111* (If Equipped).
20. *Cruise Control* ⇨ *220*.

    Adaptive Cruise Control ⇨ *223* (If Equipped).

    Phone Button. See “Steering Wheel Controls” in the infotainment manual.
21. Data Link Connector (DLC) (Out of View). See *Malfunction Indicator Lamp (Check Engine Light)* ⇨ *132*.
22. *Instrument Panel Storage* ⇨ *106*.

    Instrument Panel Fuse Block ⇨ *293*.

23. *Electric Parking Brake* ⇨ *214*.

    Instrument Panel Illumination Control ⇨ *174* (Out of View).

    Head-Up Display (HUD) ⇨ *143* (If Equipped) (Out of View).

Initial Drive Information

This section provides a brief overview about some of the important features that may or may not be on your specific vehicle.

For more detailed information, refer to each of the features which can be found later in this owner manual.

Stop/Start System

The vehicle has a fuel saving stop/start system to shut off the engine and help conserve fuel.

When the brakes are applied and the vehicle is at a complete stop, the engine may turn off. When the brake pedal is released or the accelerator pedal is pushed, the engine will restart.

The automatic engine stop/start function can be disabled using the switch. See *Starting the Engine* ⇨ *204*.

Remote Keyless Entry (RKE) System

The RKE transmitter may work up to 60 m (197 ft) away.

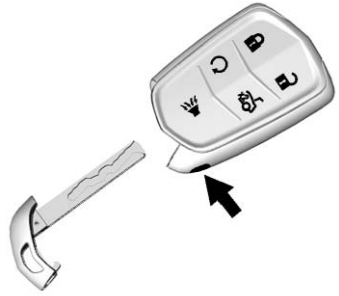

Press the button to remove the key. The key can be used for the driver door.

Press 🔓 to unlock the driver door or all doors, depending on the vehicle personalization settings. The fuel door will also be unlocked, if equipped.

Press 🔒 to lock all doors.

Lock and unlock feedback can be personalized. See *Vehicle Personalization* ⇨ *157*.

Press twice quickly to open the trunk.

Press and release to initiate vehicle locator.

Press and hold for more than three seconds to sound the panic alarm.

Press again to cancel the panic alarm.

See *Keys* ⇨ *28* and *Remote Keyless Entry (RKE) System Operation* ⇨ *29*.

Remote Vehicle Start

The engine can be started from outside of the vehicle.

Starting the Vehicle

1. Press and release on the RKE transmitter.
2. Immediately press and hold for at least four seconds or until the turn signal lamps flash.
3. Start the vehicle normally after entering.

When the vehicle starts, the parking lamps will turn on.

Remote start can be extended.

Canceling a Remote Start

To cancel a remote start, do one of the following:

- Press and hold until the parking lamps turn off.
- Turn on the hazard warning flashers.
- Turn the vehicle on and then off.

See *Remote Vehicle Start* ⇨ *36*.

Door Locks

Keyless Access

Press the button on the door handle and pull the handle when the Remote Keyless Entry (RKE) transmitter is within range. See *Remote Keyless Entry (RKE) System Operation* ⇨ *29*.

Manual Operation

From outside, use the key in the driver door. The key lock cylinder is covered by a cap. See *Door Locks* ⇨ *37*.

From the inside rear doors, push down on the door lock knob on top of the door. To unlock a door, pull once on the door handle to unlock it, and again to open it.

Power Door Locks

From outside, press or on the RKE transmitter.

From inside, press 🔒 or 🔓. See *Power Door Locks* ⇨ *39*.

Trunk

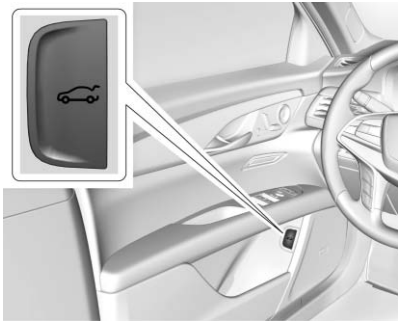

To open the trunk:

- Press 🚗.
- Press 2🚗 twice quickly on the Remote Keyless Entry (RKE) transmitter.
- Press the touch pad on the rear of the trunk above the license plate after unlocking all doors.

If equipped, these will also open the power trunk. See *Trunk* ⇨ *41*.

Windows

The power windows only operate with the ignition in ACC/ACCESSORY or ON/RUN, or when Retained Accessory Power (RAP) is active. See *Retained Accessory Power (RAP)* ⇨ *206*.

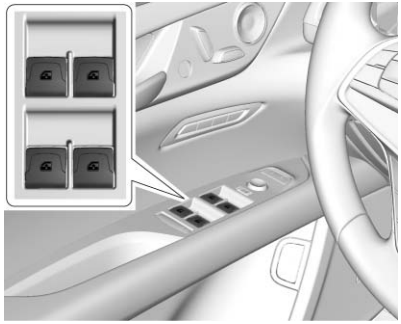

Press the switch to lower the window. Pull the switch up to raise it.

The switches on the driver door control all windows. Each passenger door has a switch that controls only that window.

See *Power Windows* ⇨ *52*.

Seat Adjustment

Power Seats

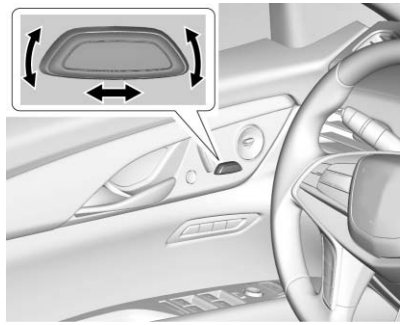

Platinum Seat Shown

To adjust the seat:

- Move the seat forward or rearward by sliding the control forward or rearward.
- Raise or lower the front part of the seat cushion by moving the front of the control up or down.
- Raise or lower the seat by moving the rear of the control up or down.

See *Power Seat Adjustment* ⇨ *60*.

Uplevel Seat Adjustment

If equipped, the ignition must be on to use all uplevel seat features.

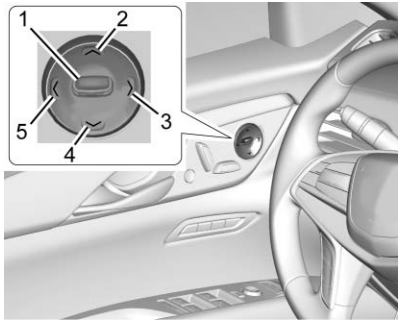

Platinum Seat

1. Feature Select
2. Up
3. Forward
4. Down
5. Rearward

- Move Feature Select (1) to display seat adjustments on the center stack. Press and release or hold to scroll through features.
- Press Up (2) to make upward adjustments of the selected feature.
- Press Forward (3) to make forward adjustments of the selected feature.
- Press Down (4) to make downward adjustments of the selected feature.
- Press Rearward (5) to make rearward adjustments of the selected feature.

Reclining Seatbacks

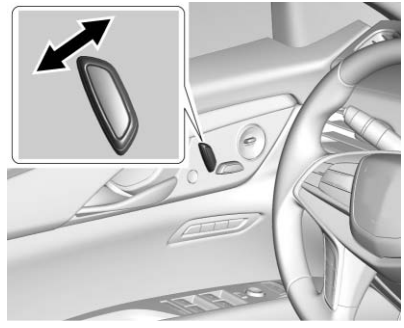

Platinum Seat Shown

To adjust the seatback:

- Tilt the top of the control rearward to recline.
- Tilt the top of the control forward to raise.

See *Reclining Seatbacks* ⇨ *62*.

Base Lumbar Adjustment

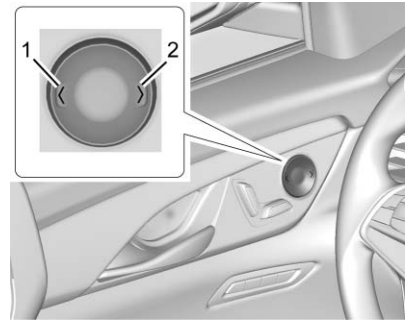

Base Seat Shown

To adjust lumbar support, if equipped:

1. Forward
2. Rearward

- Press Forward (1) to move lumbar support inward.

- Press Rearward (2) to move lumbar support outward.

Massage

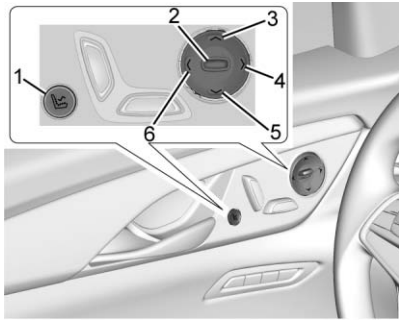

Platinum Driver Seat Shown, Passenger Seat Similar

If equipped, the ignition must be on to use the massage feature.

To activate and adjust the massage feature:

1. Toggle the center selection control (2) located on the door to view adjustable massage options on the center stack display.
2. Select massage feature.
3. Press the control up (3) or down (5) to select the massage type.
4. Press the control forward (4) or rearward (6) to change the intensity.
5. Press the massage control button (1) to recall the last massage type and intensity.

See *Massage* ⇨ *66*.

Memory Features

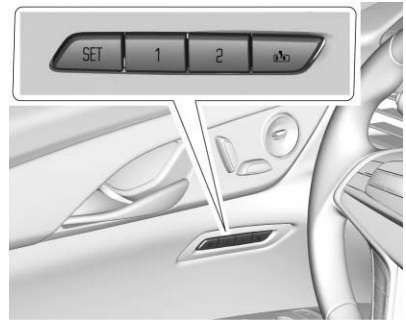

Platinum Seat Driver Buttons Shown, Passenger Buttons Similar

If equipped, the SET, 1, 2, and (Exit) buttons on the driver door and front passenger door are used to manually store and recall memory settings for the driver and passenger seats. The driver memory buttons also store outside mirror, power tilt and telescoping steering column positions, and massage settings (if equipped).

When Auto Memory Recall is enabled in the personalization menu, positions previously stored to memory buttons 1 and 2 are recalled when the ignition is changed from OFF to ON/RUN/START or ACC/ACCESSORY.

When Easy Exit Options is enabled in the personalization menu, the seat will move rearward to the stored position when the ignition is changed to OFF and the driver door is opened within a short time.

See *Memory Seats* ⇨ *63* and *Vehicle Personalization* ⇨ *157*.

Second Row Seats

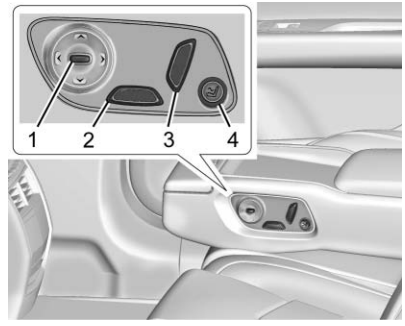

If equipped, the armrest may have seat adjustment controls.

1. Seatback Display and Lumbar Adjustment Control
2. Power Seat Adjustment
3. Seatback Recline
4. Massage

See *Rear Seats* ⇨ *66*.

Rear Seat Armrest

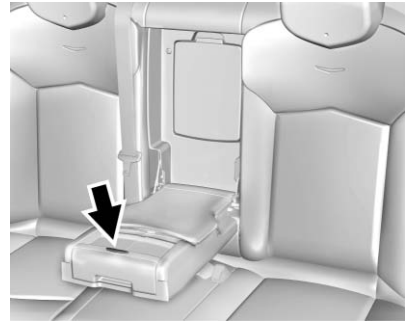

The rear seat has an armrest in the center of the seatback. Lower the armrest and press button at the front of the armrest to access the cupholders.

To fold, press the cupholders into the seat if they have been opened, lift the armrest up, and push it rearward until it is flush with the seatback.

Heated and Ventilated Rear Seats

⚠ Warning

If you cannot feel temperature change or pain to the skin, the seat heater may cause burns. See the Warning under *Heated and Ventilated Front Seats* ⇨ *64*.

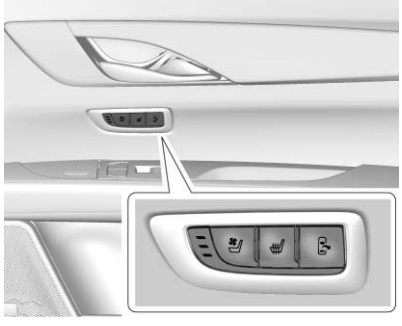

Platinum Seat

If equipped, the buttons are on the rear passenger doors.

With the ignition in ON/RUN, press or to heat the left or right outboard seat cushion.

With the ignition in ON/RUN, press or to ventilate the left or right outboard seat.

See *Heated and Ventilated Rear Seats* ⇨ *69*.

Heated and Ventilated Seats

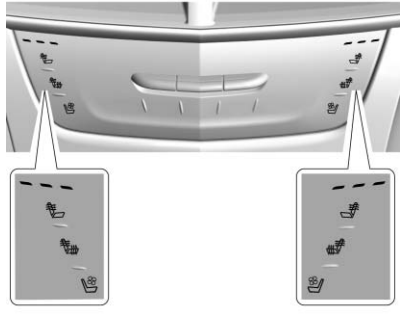

If equipped, the buttons are near the climate controls on the center stack. To operate, the ignition must be in ON/RUN.

Press or to heat the driver or passenger seat cushion and seatback.

Press or to heat the driver or passenger seatback only.

Press or to ventilate the driver or passenger seat.

Press the button once for the highest setting. With each press of the button, the seat will change to the next lower setting, and then to the off setting. The indicator lights above the buttons indicate three for the highest setting and one for the lowest. If the front heated seats are on high, the level may automatically be lowered after approximately 30 minutes.

See *Heated and Ventilated Front Seats* ⇨ *64*.

Head Restraint Adjustment

Do not drive until the head restraints for all occupants are installed and adjusted properly.

To achieve a comfortable seating position, change the seatback recline angle as little as necessary while keeping the seat and the head restraint height in the proper position.

See *Head Restraints* ⇨ *58* and *Power Seat Adjustment* ⇨ *60*.

Safety Belts

Refer to the following sections for important information on how to use safety belts properly:

- *Safety Belts* ⇨ *70*.
- *How to Wear Safety Belts Properly* ⇨ *71*.
- *Lap-Shoulder Belt* ⇨ *72*.
- *Lower Anchors and Tethers for Children (LATCH System)* ⇨ *95*.

Passenger Sensing System

United States

Canada

The passenger sensing system turns off the front outboard passenger frontal airbag and knee airbag under certain conditions. No other airbag is affected by the passenger sensing system. See *Passenger Sensing System* ⇨ *82*.

The passenger airbag status indicator will light on the overhead console when the vehicle is started. See *Passenger Airbag Status Indicator* ⇨ *130*.

Mirror Adjustment

Exterior Mirror

1. Move the selector switch to L (Left) or R (Right) to choose the driver or passenger mirror.

2. Press one of the four arrows to move the mirror.
3. Move the selector switch to ● to deselect the mirror.

The vehicle has manual folding mirrors or, if equipped, power folding mirrors. See *Power Mirrors* ⇨ *48*.

Interior Mirror

Adjustment

Adjust the rearview mirror for a clear view of the area behind your vehicle.

Automatic Dimming Rearview Mirror

Automatic dimming reduces the glare of headlamps from behind. The dimming feature comes on when the vehicle is started.

Rear Camera Mirror

If equipped, this automatic dimming rearview mirror provides a wide angle camera view of the area behind the vehicle. For ease of use, adjust the mirror for a clear view of the area behind the vehicle while the display is off. See *Rear Camera Mirror* ⇨ *50*.

Steering Wheel Adjustment

Power Tilt and Telescoping Steering Wheel

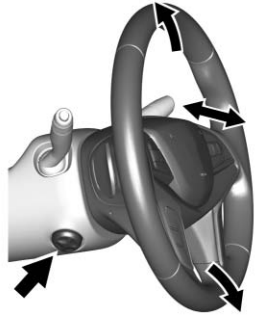

Press the control to move the tilt and telescoping steering wheel up and down or forward and rearward.

Do not adjust the steering wheel while driving.

Interior Lighting

Dome Lamp

The dome lamp is in the overhead console.

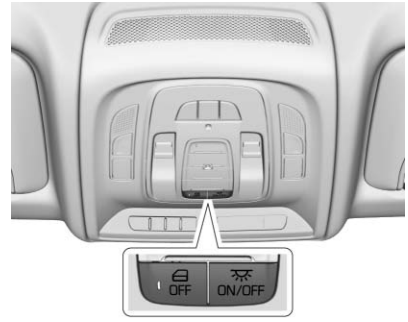

To change the dome lamp settings, press:

OFF : Turns the lamp off, even when a door is open.

ON/OFF : Turns the lamp on or off.

Reading Lamps

There are front and rear reading lamps on the overhead console and over the rear passenger doors. These lamps come on automatically when any door is opened.

To manually turn the reading lamps on or off:

Press ⚡ or ⚡ next to each overhead console reading lamp.

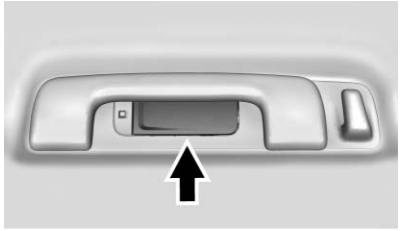

Press the lamp lenses over the rear passenger doors.

For more information on interior lighting, see *Instrument Panel Illumination Control* ⇨ *174*.

Exterior Lighting

The exterior lamp control is on the turn signal lever.

Turn the control to the following positions:

⏻ **:** Turns off the exterior lamps. The knob returns to the AUTO position after it is released. Turn to ⏻ again to reactivate the AUTO mode.

AUTO : Automatically turns the exterior lamps on and off, depending on outside lighting.

: Turns on the parking lamps including all lamps, except the headlamps.

: Turns on the headlamps together with the parking lamps and instrument panel lights.

See:

- *Exterior Lamp Controls* ⇨ *170*.
- *Turn and Lane-Change Signals* ⇨ *173*.

Windshield Wiper/Washer

With the ignition in ACC/ACCESSORY or ON/RUN, move the lever to select the wiper speed.

HI : Use for fast wipes.

LO : Use for slow wipes.

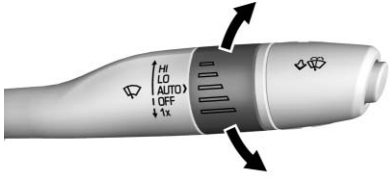

AUTO : Use this setting for intermittent wipes or Rainsense™, when enabled. For intermittent wipes, move the lever up to AUTO, then turn the band on the wiper lever up for more frequent wipes or down for less frequent wipes.

If Rainsense is enabled in vehicle personalization, move the lever up to AUTO, then turn the band on the wiper lever to adjust the sensitivity to moisture.

- Turn the band up for more sensitivity to moisture.
- Turn the band down for less sensitivity to moisture.
- Move the windshield wiper lever out of the AUTO position to deactivate Rainsense.

To enable or disable this feature, see “Rain Sense Wipers” under *Vehicle Personalization* ⇨ *157*.

OFF : Use to turn the wipers off.

1X : For a single wipe, briefly move the lever down. For several wipes, hold the lever down.

: Pull the lever toward you to spray windshield washer fluid and activate the wipers.

See *Windshield Wiper/Washer* ⇨ *111*.

Climate Controls

The climate control buttons and the touch screen are used to adjust the heating, cooling, and ventilation.

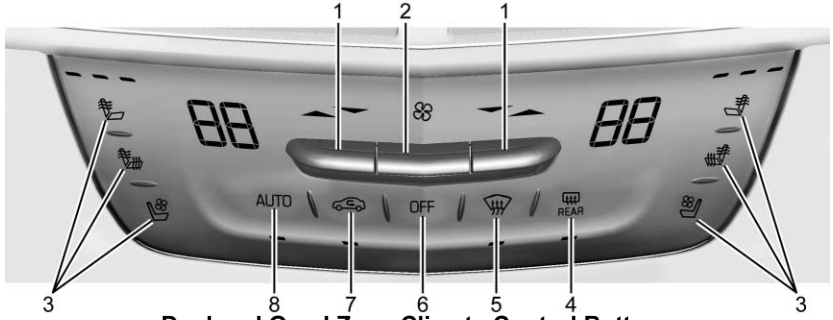

Dual and Quad Zone Climate Control Buttons

1. Driver and Passenger Temperature Controls
2. Fan Control
3. Driver and Passenger Heated and Ventilated Seats (If Equipped)
4. Rear Window Defogger
5. Defrost
6. OFF (Fan)
7. Recirculation
8. AUTO (Automatic Operation)

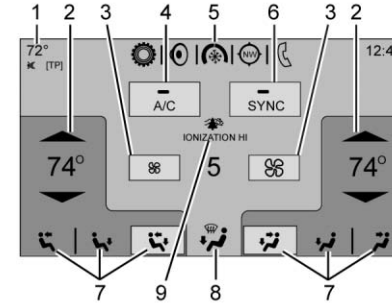

Climate Touch Screen Controls

1. Outside Temperature Display
2. Driver and Passenger Temperature Controls
3. Fan Control
4. A/C (Air Conditioning)
5. Climate Control Selection (Application Tray Button)
6. SYNC (Synchronized Temperature)
7. Driver and Passenger Air Delivery Mode Controls
8. Defog

9. Ionizer Status Indicator (If Equipped)

See *Automatic Climate Control System (Quad Zone)* ⇨ *178* or *Automatic Climate Control System (Dual Zone)* ⇨ *185*.

Transmission

Tap Shift

Vehicles equipped with Tap Shift allow shifting an automatic transmission similar to a manual transmission. Tap Shift can be enabled through the shift lever or the Tap Shift controls on the back of the steering wheel. See *Manual Mode* ⇨ *212*.

Vehicle Features

Infotainment System

See the infotainment manual for information on the radio, audio players, rear seat infotainment, phone, navigation system, and voice or speech recognition. It also includes information on settings.

Steering Wheel Controls

The infotainment system can be operated by using the steering wheel controls. See "Steering Wheel Controls" in the infotainment manual.

Cruise Control

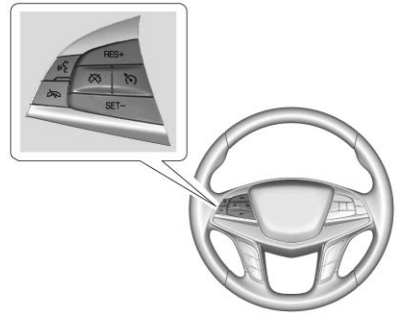

: Press to turn the system on and off. A white indicator appears in the instrument cluster when turned on.

RES+ : If there is a set speed in memory, press briefly to resume to that speed or press and hold to accelerate. If the cruise control is already active, use to increase vehicle speed. To increase speed by 1 km/h (1 mph), press RES+ to the first detent. To increase speed to the

next 5 km/h (5 mph) mark on the speedometer, press RES+ to the second detent.

SET− : Press briefly to set the speed and activate cruise control. If the cruise control is already active, use to decrease vehicle speed. To decrease speed by 1 km/h (1 mph), press SET− to the first detent. To decrease speed to the next 5 km/h (5 mph) mark on the speedometer, press SET− to the second detent.

: Press to disengage cruise control without erasing the set speed from memory.

See *Cruise Control* ⇨ *220* or *Adaptive Cruise Control* ⇨ *223* (if equipped).

Driver Information Center (DIC)

The DIC display is in the instrument cluster. It shows the status of many vehicle systems.

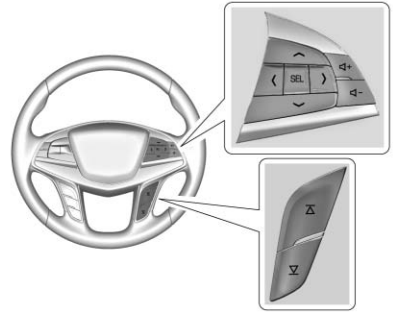

∧ or ∨ : Press to go to the previous or next selection.

< or > : Press to move between the interactive display zones in the cluster. Press < to go back to the previous menu.

SEL : Press to open a menu or select a menu item. Press and hold to reset values on certain screens.

See *Driver Information Center (DIC)* ⇨ *140*.

Forward Collision Alert (FCA) System

If equipped, FCA may help avoid or reduce the harm caused by front-end crashes. FCA provides a green indicator, , when a vehicle is detected ahead. This indicator displays amber if you follow a vehicle much too closely. When approaching a vehicle ahead too quickly, FCA provides a flashing red alert on the windshield and rapidly beeps or pulses the driver seat.

See *Forward Collision Alert (FCA) System* ⇨ *237*.

Night Vision System

If equipped, this system can help the driver see and alert the driver to pedestrians or large animals ahead of the vehicle beyond the area lit by the headlamps.

See *Night Vision System* ⇨ *243*.

Front Automatic Braking (FAB) System

If the vehicle has Forward Collision Alert (FCA), it also has FAB, which includes Intelligent Brake Assist (IBA). When the system detects a vehicle ahead in your path that is traveling in the same direction that you may be about to crash into, it can provide a boost to braking or automatically brake the vehicle. This can help avoid or lessen the severity of crashes when driving in a forward gear.

See *Front Automatic Braking (FAB) System* ⇨ *240*.

Front Pedestrian Braking (FPB) System

If equipped, the FPB system may help avoid or reduce the harm caused by front-end crashes with nearby pedestrians when driving in a forward gear. FPB displays an amber indicator, 🚶, when a nearby pedestrian is detected directly ahead. When approaching a detected pedestrian too quickly, FPB provides a red flashing alert on the windshield and rapidly beeps or pulses the driver seat. FPB can provide a boost to braking or automatically brake the vehicle.

See *Front Pedestrian Braking (FPB) System* ⇨ *241*.

Lane Keep Assist (LKA)

If equipped, LKA may help avoid crashes due to unintentional lane departures. It may assist by gently turning the steering wheel if the vehicle approaches a detected lane marking without using a turn signal in that direction. It may also provide a Lane Departure Warning (LDW) alert as the lane marking is crossed. The system will not assist or alert if it detects that you are actively steering. Override LKA by turning the steering wheel. LKA uses a camera to detect lane markings between 60 km/h (37 mph) and 180 km/h (112 mph).

See *Lane Departure Warning (LDW)* ⇨ *248* and *Lane Keep Assist (LKA)* ⇨ *248*.

Lane Change Alert (LCA)

If equipped, the LCA system is a lane-changing aid that assists drivers with avoiding lane change crashes that occur with moving vehicles in the side blind zone (or spot) areas or with vehicles rapidly approaching these areas from behind. The LCA warning display will light up in the corresponding outside side mirror and will flash if the turn signal is on. The Side Blind Zone Alert (SBZA) system is included as part of the LCA system.

See *Side Blind Zone Alert (SBZA)* ⇨ *246* and *Lane Change Alert (LCA)* ⇨ *246*.

Surround Vision

If equipped, views around the vehicle display on the center stack to aid with parking and low-speed maneuvers.

See “Surround Vision” under *Assistance Systems for Parking or Backing* ⇨ *231*.

Front Vision Camera

If equipped, a view of the area in front of the vehicle displays on the center stack to aid with parking and low-speed maneuvers.

See “Front Vision Camera” under *Assistance Systems for Parking or Backing* ⇨ *231*.

Rear Vision Camera (RVC)

If equipped, RVC displays a view of the area behind the vehicle on the center stack display when the vehicle is shifted into R (Reverse) to aid with parking and low-speed backing maneuvers.

See *Assistance Systems for Parking or Backing* ⇨ *231*.

Rear Cross Traffic Alert (RCTA) System

If equipped, the RCTA system uses a triangle with an arrow displayed on the RVC screen to warn of traffic behind your vehicle that may cross your vehicle's path while in R (Reverse). In addition, beeps will sound, or the driver seat will pulse.

See *Assistance Systems for Parking or Backing* ⇨ *231*.

Parking Assist

If equipped, Rear Parking Assist (RPA) uses sensors on the rear bumper to assist with parking and avoiding objects while in R (Reverse). It operates at speeds less than 8 km/h (5 mph). RPA may display a warning triangle on the Rear Vision Camera screen and a graphic on the instrument cluster to provide the object distance. In addition, multiple beeps or seat pulses may occur if very close to an object.

The vehicle may also have the Front Parking Assist system.

See *Assistance Systems for Parking or Backing* ⇨ *231*.

Automatic Parking Assist (APA)

If equipped, the APA system helps to search for and maneuver the vehicle into parallel or perpendicular parking spots using automatic steering, DIC displays, and beeps. When the vehicle speed is below 30 km/h (18 mph), press P to enable the system.

See “Automatic Parking Assist (APA)” under *Assistance Systems for Parking or Backing* ⇨ *231*.

Rear Automatic Braking (RAB) System

If the vehicle has Adaptive Cruise Control (ACC) it also has the RAB system, which is designed to help avoid or reduce the harm caused by backing crashes when the vehicle is shifted into R (Reverse). If the system detects the vehicle is backing too fast to avoid a crash with a detected object behind your vehicle in your path, it may automatically brake hard to a stop.

See *Assistance Systems for Parking or Backing* ⇨ *231*.

Surround Vision Recorder

If equipped, the Surround Vision Recorder records 360° camera views to an SD card. Only images are recorded, no sound.

See *Surround Vision Recorder* ⇨ *250*.

Power Outlets

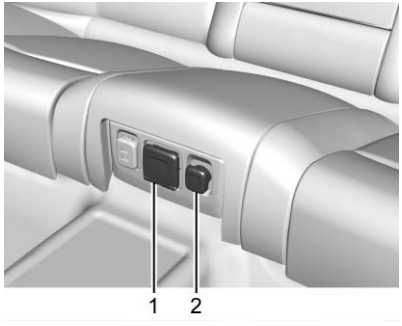

1. Power Outlet 110V/120V Alternating Current
2. Power Outlet 12 Volt Direct Current

The 12-volt accessory power outlet can be used to plug in electrical equipment, such as a cell phone or MP3 player.

The vehicle has an accessory power outlet on the rear seat trim panel.

Lift the cover to access the accessory power outlet.

See *Power Outlets* ⇨ *114*.

Universal Remote System

If equipped, this system provides a way to replace up to three remote control transmitters used to activate devices such as garage door openers, security systems, and home automation devices.

Read the instructions completely before attempting to program the Universal Remote system. Because of the steps involved, it may be helpful to have another person available to assist you with programming the Universal Remote system.

See *Universal Remote System* ⇨ *166*.

Sunroof

If equipped with a sunroof, the ignition must be in ON/RUN or ACC/ACCESSORY, or in Retained Accessory Power (RAP), to operate the sunroof. See *Ignition Positions* ⇨ *202* and *Retained Accessory Power (RAP)* ⇨ *206*.

1. SLIDE Switch
2. TILT Switch

Open/Close : Press the rear or front of the switch (1) to the first detent and hold to open or close the sunroof.

Express Open/Express Close : Press the rear or front of the switch (1) to the second detent and release to express open or express close the sunroof.

Vent Feature : Press and hold the front of the switch (2) to vent the sunroof. Press and hold the rear of the switch (2) to close the sunroof vent.

See *Sunroof* ⇨ *55*.

Performance and Maintenance

Traction Control/ Electronic Stability Control

The Traction Control System (TCS) limits wheel spin. The system is on when the vehicle is started.

The StabiliTrak system assists with directional control of the vehicle in difficult driving conditions. The system is on when the vehicle is started.

- To turn off TCS, press and release on the center console. illuminates in the instrument cluster and the appropriate DIC message displays. See *Ride Control System Messages* ⇨ *154*.
- Press and release again to turn TCS back on.

- To turn off both TCS and StabiliTrak, press and hold on the center console until and illuminate in the instrument cluster. The appropriate DIC message displays. See *Ride Control System Messages* ⇨ *154*.
- Press and release again to turn on both systems.

See *Traction Control/Electronic Stability Control* ⇨ *217*.

The vehicle has Driver Mode Control. See *Driver Mode Control* ⇨ *219*.

Tire Pressure Monitor

This vehicle may have a Tire Pressure Monitor System (TPMS).

The low tire pressure warning light alerts to a significant loss in pressure of one of the vehicle's tires. If the warning light comes on, stop as soon as possible and inflate the tires to the recommended pressure shown on the Tire and Loading Information label. See *Vehicle Load Limits* ⇨ *198*. The warning light will remain on until the tire pressure is corrected.

The low tire pressure warning light may come on in cool weather when the vehicle is first started, and then turn off as the vehicle is driven. This may be an early indicator that the tire pressures are getting low and the tires need to be inflated to the proper pressure.

The TPMS does not replace normal monthly tire maintenance. Maintain the correct tire pressures.

See *Tire Pressure Monitor System* ⇨ *308*.

Engine Oil Life System

The engine oil life system calculates engine oil life based on vehicle use and displays the CHANGE ENGINE OIL SOON message when it is time to change the engine oil and filter. The oil life system should be reset to 100% only following an oil change.

Resetting the Oil Life System

1. Using the DIC buttons, display REMAINING OIL LIFE on the DIC. See *Driver Information Center (DIC)* ⇨ *140* and *Engine Oil Messages* ⇨ *149*.
2. Press and hold SEL to clear the CHANGE ENGINE OIL SOON message and reset the oil life at 100%.

   Be careful not to reset the oil life display accidentally at any time other than after the oil is changed. It cannot be reset accurately until the next oil change.

The oil life system can also be reset as follows:

1. Turn the ignition on with the engine off.
2. Fully press and release the accelerator pedal three times within five seconds.

   If the CHANGE ENGINE OIL SOON message is not on, the system is reset.

See *Engine Oil Life System* ⇨ *272*.

Driving for Better Fuel Economy

Driving habits can affect fuel mileage. Here are some driving tips to get the best fuel economy possible.

- Avoid fast starts and accelerate smoothly.
- Brake gradually and avoid abrupt stops.
- Avoid idling the engine for long periods of time.
- When road and weather conditions are appropriate, use cruise control.
- Always follow posted speed limits or drive more slowly when conditions require.
- Keep vehicle tires properly inflated.
- Combine several trips into a single trip.
- Replace the vehicle's tires with the same TPC Spec number molded into the tire's sidewall near the size.
- Follow recommended scheduled maintenance.

Roadside Service

U.S.: 1-800-224-1400

Canada: 1-800-882-1112

TTY Users (U.S. Only): 1-888-889-2438

New Cadillac owners are automatically enrolled in the Roadside Service Program.

See *Roadside Service* ⇨ *364*.

Keys, Doors, and Windows

Keys and Locks
Keys 28
Remote Keyless Entry (RKE) System 29
Remote Keyless Entry (RKE) System Operation 29
Remote Vehicle Start 36
Door Locks 37
Power Door Locks 39
Delayed Locking 39
Automatic Door Locks 39
Lockout Protection 39
Safety Locks 40

Doors
Trunk 41

Vehicle Security
Vehicle Security 44
Vehicle Alarm System 44
Immobilizer 46
Immobilizer Operation 46

Exterior Mirrors
Convex Mirrors 48
Power Mirrors 48
Heated Mirrors 49
Reverse Tilt Mirrors 49

Interior Mirrors
Interior Rearview Mirrors 49
Automatic Dimming Rearview Mirror 49
Rear Camera Mirror 50

Windows
Windows 51
Power Windows 52
Sun Visors 54
Rear Window Sunshade 54

Roof
Sunroof 55

Keys and Locks

Keys

⚠ Warning

Leaving children in a vehicle with a Remote Keyless Entry (RKE) transmitter is dangerous and children or others could be seriously injured or killed. They could operate the power windows or other controls or make the vehicle move. The windows will function with the RKE transmitter in the vehicle, and children or others could be caught in the path of a closing window. Do not leave children in a vehicle with an RKE transmitter.

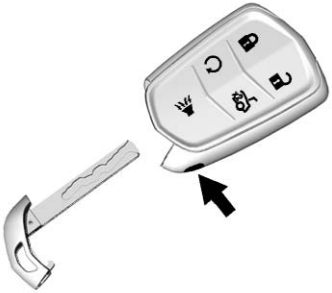

This key, inside the Remote Keyless Entry (RKE) transmitter, is used for the driver door.

To remove the key, press the button on the side of the transmitter near the bottom, and pull the key out. Never pull the key out without pressing the button.

See your dealer if a new key is needed.

Contact Roadside Service if locked out of the vehicle. See *Roadside Service* ⇨ *364*.

With an active OnStar subscription, an OnStar Advisor may remotely unlock the vehicle. See *OnStar Overview* ⇨ *375*.

Remote Keyless Entry (RKE) System

See *Radio Frequency Statement* ⇨ *371*.

If there is a decrease in the RKE operating range:

- Check the distance. The transmitter may be too far from the vehicle.
- Check the location. Other vehicles or objects may be blocking the signal.
- Check the transmitter's battery. See “Battery Replacement” later in this section.
- If the transmitter is still not working correctly, see your dealer or a qualified technician for service.

Remote Keyless Entry (RKE) System Operation

The Keyless Access system allows for vehicle entry when the transmitter is within 1 m (3 ft). See “Keyless Access Operation” later in this section.

The RKE transmitter may work up to 60 m (197 ft) away from the vehicle.

Keep in mind that other conditions, such as those previously stated, can impact the performance of the transmitter.

: Press to lock all doors. The turn signal indicators may flash and/or the horn may sound on the second press to indicate locking. See *Vehicle Personalization* ⇨ *157*.

If the driver door is open when is pressed and Unlocked Door Anti-Lockout is enabled through the vehicle personalization, all doors will lock and then the driver door will immediately unlock. See *Vehicle Personalization* ⇨ *157*. If the passenger door is open when is pressed, all doors lock.

Pressing may also arm the alarm system. See *Vehicle Alarm System* ⇨ *44*.

If equipped with auto mirror folding, pressing and holding for one second will fold the mirrors. The auto mirror folding feature will not operate unless it is enabled. See *Vehicle Personalization* ⇨ *157*.

: Press to unlock the driver door. Press unlock again within five seconds to unlock all doors. The RKE transmitter can be programmed to unlock all doors on the first button press. See *Vehicle Personalization* ⇨ *157*.

Lock and unlock feedback can be personalized. See *Vehicle Personalization* ⇨ *157*. When remotely unlocking the vehicle at night, the headlamps and back-up lamps will come on for about 30 seconds to light your approach to the vehicle. The turn signal indicators may flash to indicate unlocking.

Pressing will also unlock the fuel door.

Pressing will disarm the alarm system. See *Vehicle Alarm System* ⇨ *44*.

If equipped with auto mirror folding, pressing and holding for one second will unfold the mirrors. The auto mirror folding feature will not operate unless it is enabled. See *Vehicle Personalization* ⇨ *157*.

Press and hold until the windows fully open. Windows will not operate unless remote window operation is enabled. See *Vehicle Personalization* ⇨ *157*.

: Press and release and then immediately press and hold for at least four seconds to start the engine from outside the vehicle using the RKE transmitter. See *Remote Vehicle Start* ⇨ *36*.

: Press and release one time to initiate vehicle locator. The exterior lamps flash and the horn chirps three times. Press and hold for more than three seconds to sound the panic alarm. The horn sounds

and the turn signal lamps flash for 30 seconds, or until is pressed again or the vehicle is started.

: Press twice quickly to open the trunk. Press once to stop the trunk from moving. See *Trunk* ⇨ *41*.

Keyless Access Operation

The Keyless Access system lets you lock and unlock the doors and access the trunk without removing the RKE transmitter from your pocket, purse, briefcase, etc. The RKE transmitter must be within 1 m (3 ft) of the door being opened.
If equipped, there will be a button on the outside door handles.

The Keyless Access system can be programmed to unlock all doors on the first lock/unlock button press from the driver door. See *Vehicle Personalization* ⇨ *157*.

Keyless Unlocking/Locking from the Driver Door

When the doors are locked and the RKE transmitter is within 1 m (3 ft) of the door handle, pressing the lock/unlock button on the driver door handle will unlock the driver door. If the lock/unlock button is pressed again within five seconds, all passenger doors will unlock.

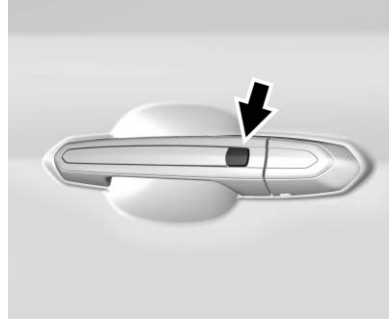

Driver Door Shown, Passenger Similar

Pressing the lock/unlock button will cause all doors to lock if any of the following occur:

- It has been more than five seconds since the first lock/unlock button press.
- Two lock/unlock button presses were used to unlock all doors.
- Any vehicle door has opened and all doors are now closed.

Keyless Unlocking/Locking from the Passenger Doors

When the doors are locked and the RKE transmitter is within 1 m (3 ft) of the door handle, pressing the lock/unlock button on a passenger door handle will unlock all doors. Pressing the lock/unlock button will cause all doors to lock if any of the following occur:

- The lock/unlock button was used to unlock all doors.
- Any vehicle door has opened and all doors are now closed.

Passive Locking

The Keyless Access system will lock the vehicle several seconds after all doors are closed if the vehicle is off and at least one transmitter has been removed or none remain in the vehicle.

If equipped with a locking fuel door, the fuel door will also lock at this time.

If other electronic devices interfere with the RKE transmitter signal, the vehicle may not detect the RKE

transmitter inside the vehicle. If passive locking is enabled, the doors may lock with the RKE transmitter inside the vehicle. Do not leave the RKE transmitter in an unattended vehicle.

To customize the doors to automatically lock when exiting the vehicle, see *Vehicle Personalization* ⇨ *157*.

Temporary Disable of Passive Locking Feature

Temporarily disable passive locking by pressing and holding 🔒 on the interior door switch with a door open for at least four seconds, or until three chimes are heard. Passive locking will then remain disabled until 🔒 on the interior door is pressed, or until the vehicle is turned on.

Remote Left In Vehicle Alert

When the vehicle is turned off and a remote is left in the vehicle, the horn will chirp three times after all doors are closed. To turn on or off see *Vehicle Personalization* ⇨ *157*.

Keyless Trunk Opening

To open the trunk, press the touch pad on the rear of the trunk above the license plate. The RKE transmitter must be within 1 m (3 ft).

Keyed Access

To access a vehicle with a dead transmitter battery, see *Door Locks* ⇨ *37*.

Programming Transmitters to the Vehicle

Only RKE transmitters programmed to the vehicle will work. If a transmitter is lost or stolen, a replacement can be purchased and programmed through your dealer. The vehicle can be reprogrammed so that lost or stolen transmitters no longer work. Each vehicle can have up to eight transmitters matched to it.

Programming with a Recognized Transmitter

A new transmitter can be programmed to the vehicle when there is one recognized transmitter. To program, the vehicle must be off and all transmitters, both currently recognized and new, must be with you.

1. Remove the vehicle key from the recognized transmitter.
2. Place the recognized transmitter(s) in the cupholder.
3. Remove the key lock cylinder cap on the driver door handle. See *Door Locks* ⇨ *37*. Insert the vehicle key into the key lock cylinder on the driver door handle, then turn the key counterclockwise to the unlock position five times within 10 seconds.

   The Driver Information Center (DIC) displays READY FOR REMOTE #2, 3, 4, ETC.

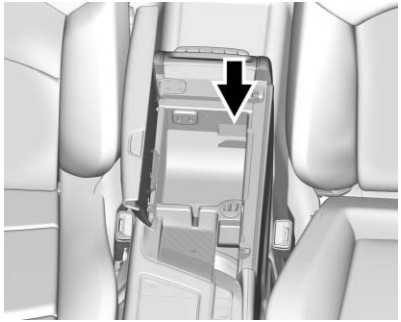

4. Place the new transmitter into the transmitter pocket. The center console storage area will need to be opened.
5. Press ENGINE START/STOP. When the transmitter is learned, the DIC display will show that it is ready to program the next transmitter.
6. Remove the transmitter from the transmitter pocket and press 🔓 or 🔒 on the transmitter.

   To program additional transmitters, repeat Steps 4–6.

   When all additional transmitters are programmed, press and hold ENGINE START/STOP for approximately 12 seconds to exit programming mode.
7. Put the vehicle key back into the transmitter.

Programming without a Recognized Transmitter

If there are no currently recognized transmitters available, follow this procedure to program up to eight transmitters. This feature is not available in Canada. This procedure will take approximately 30 minutes to complete. The vehicle must be off and all transmitters to be programmed must be with you.

1. Remove the vehicle key from the transmitter.
2. Remove the key lock cylinder cap on the driver door handle. See *Door Locks* ⇨ *37*. Insert the vehicle key into the key lock cylinder on the driver door handle, then turn the key counterclockwise to the unlock position five times within 10 seconds.

   The Driver Information Center (DIC) displays REMOTE LEARN PENDING, PLEASE WAIT.
3. Wait for 10 minutes until the DIC displays PRESS ENGINE START BUTTON TO LEARN and then press ENGINE START/STOP.

   The DIC display will again show REMOTE LEARN PENDING, PLEASE WAIT.
4. Repeat Step 3 two additional times. After the third time all previously known transmitters will no longer work with the vehicle. Remaining transmitters can be relearned during the next steps.

   The DIC display should now show READY FOR REMOTE # 1.

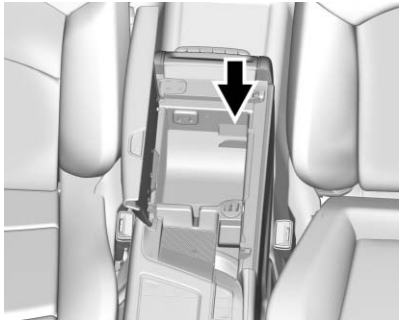

5. Place the new transmitter in the transmitter pocket. The center console storage area will need to be opened.
6. Press ENGINE START/STOP. When the transmitter is learned, the DIC display will show that it is ready to program the next transmitter.
7. Remove the transmitter from the transmitter pocket and press 🔓 or 🔒 on the transmitter.

   To program additional transmitters, repeat Steps 5–7.

   When all additional transmitters are programmed, press and hold ENGINE START/STOP for approximately 12 seconds to exit programming mode.
8. Put the vehicle key back into the transmitter.

Starting the Vehicle with a Low Transmitter Battery

If the transmitter battery is weak or if there is interference with the signal, the DIC may display NO REMOTE DETECTED or NO REMOTE KEY WAS DETECTED PLACE KEY IN TRANSMITTER POCKET THEN START YOUR VEHICLE when starting the vehicle. See *Key and Lock Messages* ⇨ *150*.

To start the vehicle:

1. Open the center console storage area.

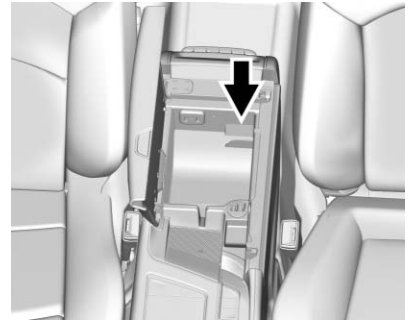

2. Place the transmitter in the transmitter pocket.
3. With the vehicle in P (Park) or N (Neutral) press the brake pedal and ENGINE START/STOP.

   Replace the transmitter battery as soon as possible.

Battery Replacement

Caution
When replacing the battery, do not touch any of the circuitry on the transmitter. Static from your body could damage the transmitter.

Replace the battery if the REPLACE BATTERY IN REMOTE KEY message displays in the DIC.

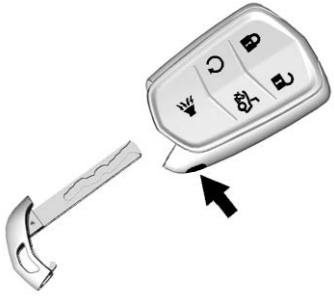

1. Press the button on the side of the transmitter near the bottom and pull the key out.

2. Separate the two halves of the transmitter using a flat tool inserted into the bottom center of the transmitter. Do not use the key slot.

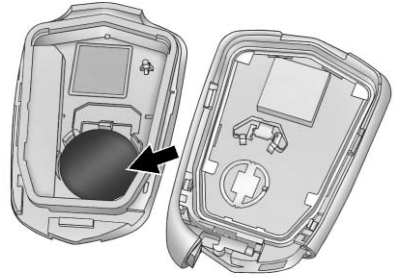

3. Remove the old battery. Do not use a metal object.
4. Insert the new battery on the back housing, positive side facing down. Replace with a CR2032 or equivalent battery.
5. Align the front and back housing, then snap the transmitter together.
6. Reinsert the key.

Remote Vehicle Start

This feature allows the engine to be started from outside the vehicle.

: This button will be on the RKE transmitter if the vehicle has remote start.

The climate control system will use the previous settings during a remote start. The rear window defogger may come on during remote start based on cold ambient conditions. The rear defog indicator light does not come on during remote start.

If equipped, the heated and ventilated front seats may also come on when the vehicle personalization setting is enabled. See *Heated and Ventilated Front Seats* ⇨ *64*.

Laws in some local communities may restrict the use of remote starters. For example, some laws may require a person using remote start to have the vehicle in view. Check local regulations for any requirements.

If your vehicle is low on fuel, do not use the remote start feature. The vehicle may run out of fuel.

The RKE transmitter range may be shorter while the vehicle is running.

Other conditions can affect the performance of the transmitter. See *Remote Keyless Entry (RKE) System* ⇨ *29*.

Starting the Engine Using Remote Start

1. Press and release on the RKE transmitter.
2. Immediately press and hold for at least four seconds or until the lamps flash. This confirms the request to remote start the vehicle has been received.

   During the remote start, the doors will be locked and the parking lamps will remain on as long as the engine is running.

   The engine will shut off after 10 minutes unless a time extension is done or the ignition is put in ON/RUN/START.
3. Press the brake pedal and select the ON/RUN/START ignition mode to drive the vehicle.

Extending Engine Run Time

The engine run time can also be extended by another 10 minutes, if during the first 10 minutes Steps 1 and 2 are repeated while the engine is still running. An extension can be requested 30 seconds after starting. This provides a total of 20 minutes.

The remote start can only be extended once.

When the remote start is extended, the second 10 minute period is added on to the first 10 minutes for a total of 20 minutes.

A maximum of two remote starts, or a remote start with an extension, are allowed between ignition cycles.

The vehicle's ignition must be changed to ON/RUN/START and then back to OFF before the remote start procedure can be used again.

Canceling a Remote Start

To cancel a remote start, do one of the following:

- Press and hold ⏻ until the parking lamps turn off.
- Turn on the hazard warning flashers.
- Turn the vehicle on and then off.

Conditions in Which Remote Start Will Not Work

The remote start will not operate if any of the following occur:

- The ignition is in any mode other than OFF.
- The transmitter is in the vehicle.
- The hood is not closed.
- The hazard warning flashers are on.
- There is an emission control system malfunction.
- The engine coolant temperature is too high.
- The oil pressure is low.
- Two remote vehicle starts have already been used.
- The vehicle is not in P (Park).

Door Locks

⚠ Warning

Unlocked doors can be dangerous.

- Passengers, especially children, can easily open the doors and fall out of a moving vehicle. The chance of being thrown out of the vehicle in a crash is increased if the doors are not locked. So, all passengers should wear safety belts properly and the doors should be locked whenever the vehicle is driven.
- Young children who get into unlocked vehicles may be unable to get out. A child can be overcome by

(Continued)

Warning (Continued)

extreme heat and can suffer permanent injuries or even death from heat stroke. Always lock the vehicle whenever leaving it.

- Outsiders can easily enter through an unlocked door when slowing or stopping the vehicle. Lock the doors to help prevent this from happening.

Inside the Vehicle

Press the power door lock switch to lock or unlock all doors.

Push down on the door lock knob to lock that door. Pull once on the door handle to unlock and again to open the door.

Outside the Vehicle

Use the Remote Keyless Entry (RKE) transmitter or the key lock cylinder on the driver front door. The key lock cylinder is covered with a cap.

Keyless Access

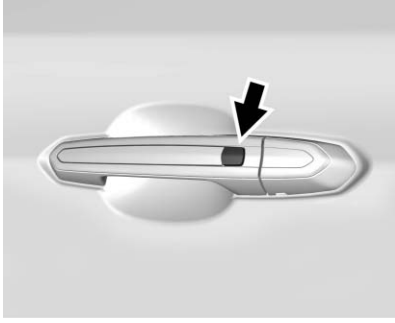

Press the lock/unlock button when the RKE transmitter is within 1 m (3 ft) of the driver door handle. When unlocking from the driver door, the first press unlocks that door; press again within five seconds to unlock all passenger doors. See *Remote Keyless Entry (RKE) System Operation* ⇨ *29*.

Key Lock Cylinder Access

To access the key lock cylinder:

1. Pull the door handle to the open position.

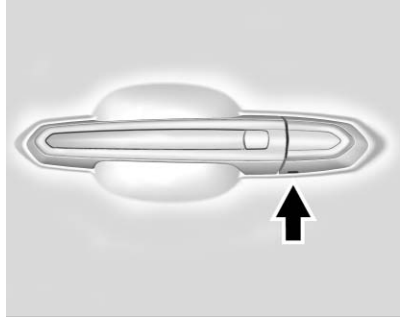

2. Insert the key into the slot on the bottom of the cap and pry outward.
3. Move the cap outward and remove.

To replace the cap:

1. Pull the door handle to the open position.

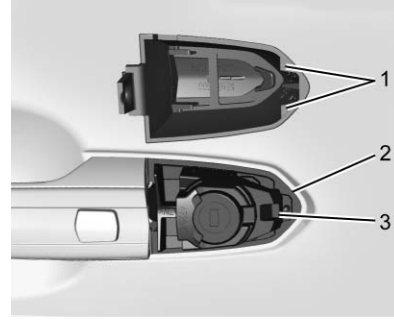

2. Insert the tabs (1) on the rear of the cap into the space between the seal (2) and the metal base (3).

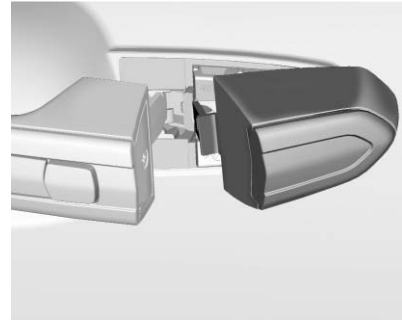

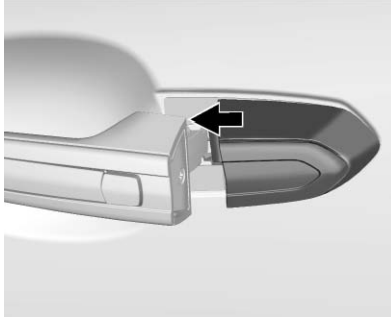

3. Move the cap inward and press to snap the cap in place.

Power Door Locks

🔒 : Press to lock the doors.

🔓 : Press to unlock the doors.

Delayed Locking

This feature delays the locking of the doors until five seconds after all doors are closed.

When 🔒 is pressed on the power door lock switch while the door is open, a chime will sound three times indicating delayed locking is active.

The doors will lock automatically five seconds after all doors are closed. If a door is reopened before that time, the five-second timer will reset when all doors are closed again.

Press 🔒 on the door lock switch again or press 🔒 on the RKE transmitter to lock the doors immediately.

This feature can also be programmed. See *Vehicle Personalization* ⇨ *157*.

Automatic Door Locks

The doors will lock automatically when all doors are closed, the ignition is on, and the shift lever is moved out of P (Park).

To unlock the doors:

- Press 🔓 on the power door lock switch.
- Shift the transmission into P (Park).

Automatic door locking cannot be disabled. Automatic door unlocking can be programmed. See *Vehicle Personalization* ⇨ *157*.

Lockout Protection

If the vehicle is in ACC/ACCESSORY or ON/RUN and the power door lock switch is pressed with the driver door open, all the doors will lock and only the driver door will unlock.

If the vehicle is off and locking is requested while a door is open, when all doors are closed the vehicle will check for RKE transmitters inside. If an RKE

transmitter is detected and the number of RKE transmitters inside has not reduced, the driver door will unlock and the horn will chirp three times.

Lockout Protection can be manually overridden with the driver door open by pressing and holding 🔒 on the power door lock switch.

Unlocked Door Anti-Lockout

If Unlocked Door Anti-Lockout is turned on and the vehicle is off, the driver door is open, and locking is requested, all the doors will lock and only the driver door will unlock. The Unlocked Door Anti-Lockout feature can be turned on or off using the vehicle personalization menus. See *Vehicle Personalization* ⇨ *157*.

Safety Locks

The rear door safety locks prevent passengers from opening the rear doors from inside the vehicle.

Manual Safety Locks

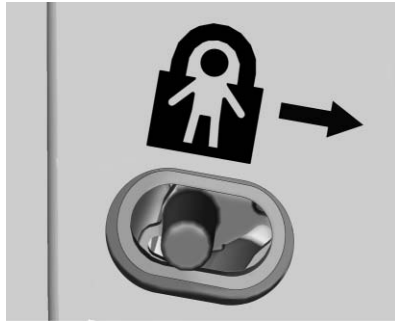

If equipped, the safety lock is on the inside edge of the rear doors. To use the safety lock:

1. Move the lever down to the lock position.
2. Close the door.
3. Do the same for the other rear door.

To open a rear door when the safety lock is on:

1. Unlock the door by activating the inside handle, by pressing the power door lock switch, or using the Remote Keyless Entry (RKE) transmitter.
2. Open the door from the outside.

When the safety lock is enabled, adults and older children will not be able to open the rear door from the inside. Cancel the safety locks to enable the doors to open from the inside.

To cancel the safety lock:

1. Unlock the door and open it from the outside.
2. Move the lever up to unlock. Do the same for the other door.

Doors

Trunk

⚠ Warning

Exhaust gases can enter the vehicle if it is driven with the liftgate or trunk/hatch open, or with any objects that pass through the seal between the body and the trunk/hatch or liftgate. Engine exhaust contains carbon monoxide (CO) which cannot be seen or smelled. It can cause unconsciousness and even death.

If the vehicle must be driven with the liftgate or trunk/hatch open:

- Close all of the windows.
- Fully open the air outlets on or under the instrument panel.
- Adjust the climate control system to a setting that brings in only outside air

(Continued)

Warning (Continued)

and set the fan speed to the highest setting. See "Climate Control Systems" in the Index.

- If the vehicle is equipped with a power liftgate, disable the power liftgate function.

See *Engine Exhaust* ⇨ *209*.

To open the trunk, the vehicle must be off or the shift lever must be in P (Park).

Manual Trunk

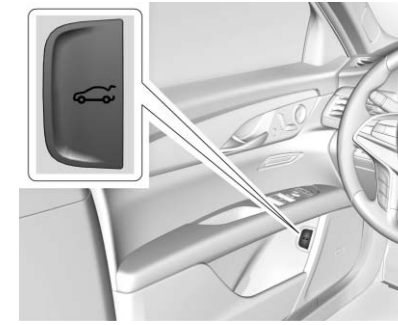

- Press on the driver door.
- Press x2 twice quickly on the Remote Keyless Entry (RKE) transmitter.

- Press the touch pad on the rear of the trunk above the license plate when all doors are unlocked.

For Keyless Access, the trunk can be opened while the vehicle is locked by pressing the touch pad above the license plate while the RKE transmitter is within 1 m (3 ft) of the rear of the vehicle. See *Remote Keyless Entry (RKE) System Operation* ⇨ *29*.

Close the trunk by pulling on the handle. Do not use the handle as a tie-down. Do not press the touch pad while closing the trunk; this will cause the trunk lid to be unlatched.

The trunk has an electric latch. If the vehicle has lost power or the battery is disconnected, the trunk will not open. If this happens, use the emergency trunk release handle.

Power Trunk

⚠ Warning

You or others could be injured if caught in the path of the power trunk. Make sure there is no one in the way of the power trunk as it is opening and closing.

If equipped, to open the power trunk:

- Press and release on the driver door. The driver door must be unlocked or the vehicle must be in ON/RUN or Retained Accessory Power (RAP).
- Press twice quickly on the RKE transmitter.
- Press the touch pad on the rear of the trunk after unlocking all doors or with the RKE transmitter in range for Keyless Access.

Monitor the trunk area to make sure nothing will come in contact or move into the path of the trunk lid when power closing.

To close the power trunk:

- Press and hold on the driver door until the trunk latches. A chime will sound and a DIC message will display when the operation is complete.

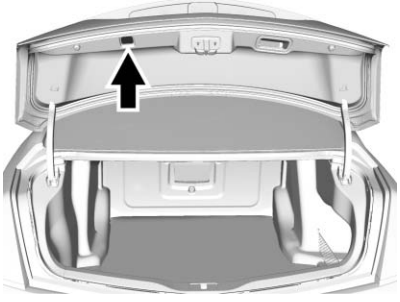

- Press the power trunk button on the trunk lid.

Press any trunk button or the touch pad to stop the power operation. Pressing a trunk button again starts the operation in the reverse direction. The touch pad will not close the trunk lid.

Do not manually force the trunk lid open or closed during a power cycle. The power trunk may be temporarily disabled under extreme low temperatures, or after repeated power cycling over a short period of time. The trunk can be opened manually.

Obstacle Detection Features

If there is an obstruction during a power open or close cycle, a closing trunk will reverse direction and an opening trunk will stop power operation. If there are multiple obstructions on the same power cycle, the power function will deactivate. After removing the obstructions, manually close the trunk lid to allow normal power operation functions to resume.

If the vehicle is locked and an obstacle prevents the trunk from closing and latching, the horn will sound as an alert that the trunk did not close.

Hands-Free Power Trunk

If equipped, the power trunk may be operated with a kicking motion under the rear bumper. The RKE transmitter must be within 1 m (3 ft).

The hands-free feature will not work while the trunk lid is moving. To stop the trunk while in motion, use one of the power trunk buttons.

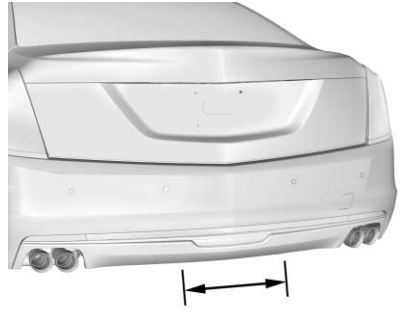

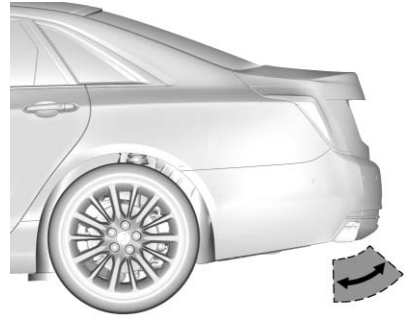

To operate, kick your foot straight up in one swift motion under the center of the rear bumper, then pull it back.

- Do not sweep your foot side to side.
- Do not keep your foot under the bumper; it will not activate.
- Do not touch the trunk lid until it has stopped moving.
- This feature may be temporarily disabled under some conditions. If it does not respond to the kick, operate the power trunk by another method or start the vehicle and the feature will be re-enabled.

When closing the power trunk using this feature, there will be a short delay. The taillamps will flash and a chime will sound. Move away from the trunk before it starts moving.

Rear Seat Pass-Through

Use the rear seat pass-through door when transporting long items. See *Rear Seat Pass-Through Door* ⇨ *69*.

Emergency Trunk Release Handle

Caution
Do not use the emergency trunk release handle as a tie-down or anchor point when securing items in the trunk as it could damage the handle.

There is a glow-in-the-dark emergency trunk release handle on the trunk lid. This handle will glow following exposure to light. Pull the release handle to open the trunk from the inside.

If equipped with a power trunk, the emergency trunk release handle will power open the trunk.

After use, return to the stored position.

Vehicle Security

This vehicle has theft-deterrent features; however, they do not make the vehicle impossible to steal.

Vehicle Alarm System

This vehicle has an anti-theft alarm system.

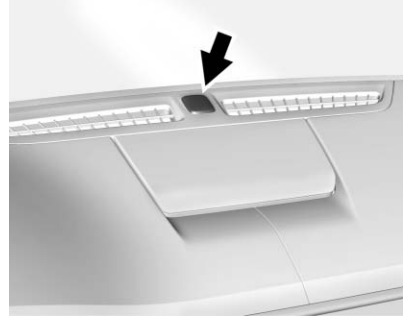

The indicator light, on the instrument panel near the windshield, indicates the status of the system.

Off : Alarm system is disarmed.

On Solid : Vehicle is secured during the delay to arm the system.

Fast Flash : Vehicle is unsecured. A door, the hood, or the trunk is open.

Slow Flash : Alarm system is armed.

Arming the Alarm System

1. Turn off the vehicle.
2. Lock the vehicle in one of three ways:
   - Use the RKE transmitter.
   - Use the Keyless Access system.
   - With a door open, press 🔒 on the interior of the door.
3. After 30 seconds the alarm system will arm, and the indicator light will begin to slowly flash indicating the alarm system is operating.

   Pressing 🔒 on the RKE transmitter a second time will bypass the 30-second delay and immediately arm the alarm system.

The vehicle alarm system will not arm if the doors are locked with the key.

If the driver door is opened without first unlocking with the RKE transmitter, the horn will chirp and the lights will flash to indicate pre-alarm. If the vehicle is not started, or the door is not unlocked by pressing 🔓 on the RKE transmitter during the 10-second pre-alarm, the alarm will be activated.

The alarm will also be activated if a passenger door, the trunk, or the hood is opened without first disarming the system. When the alarm is activated, the turn signals flash and the horn sounds for about 30 seconds. The alarm system will then re-arm to monitor the next unauthorized event.

Disarming the Alarm System

To disarm the alarm system or turn off the alarm if it has been activated:

- Press 🔓 on the RKE transmitter.
- Unlock the vehicle using the Keyless Access system.
- Start the vehicle.

To avoid setting off the alarm by accident:

- Lock the vehicle after all occupants have left the vehicle and all doors are closed.
- Always unlock a door with the RKE transmitter or use the Keyless Access system.

Unlocking the driver door with the key will not disarm the system or turn off the alarm.

How to Detect a Tamper Condition

If 🔓 is pressed on the RKE transmitter and the horn chirps and the lights flash three times, a previous alarm occurred while the system was armed.

If the alarm has been activated, a message will appear on the DIC. See *Security Messages* ⇨ *155*.

Power Sounder, Inclination Sensor, and Intrusion Sensor

In addition to the standard theft-deterrent system features, this system may also have a power sounder, inclination sensor, and intrusion sensor.

The power sounder provides an audible alarm, which is distinct from the vehicle's horn. It has its own power source, and can sound an alarm if the vehicle's battery is compromised.

The inclination sensor can set off the alarm if it senses movement of the vehicle, such as a change in vehicle orientation.

The intrusion sensor monitors the vehicle interior, and can activate the alarm if it senses unauthorized entry into the vehicle's interior. Do not allow passengers or pets to remain in the vehicle when the intrusion sensor is activated.

Before arming the theft-deterrent system and activating the intrusion sensor:

- Make sure all doors and windows are completely closed.
- Secure any loose items such as sunshades.
- Make sure there are no obstructions blocking the sensors in the front overhead console.

Inclination and Intrusion Sensors Disable Switch

It is recommended that the intrusion and inclination sensors be deactivated if pets are left in the vehicle or if the vehicle is being transported.

With the vehicle turned off, press in the front overhead console. The indicator light will come on momentarily, indicating that these sensors have been disabled for the next alarm system arming cycle.

Immobilizer

See *Radio Frequency Statement* ⇨ *371*.

Immobilizer Operation

This vehicle has a passive theft-deterrent system.

The system does not have to be manually armed or disarmed.

The vehicle is automatically immobilized when the vehicle is turned off.

The immobilization system is disarmed when the pushbutton start is activated to enter the ACC/ACCESSORY mode or the ON/RUN/START mode and a valid transmitter is present in the vehicle.

The security light, in the instrument cluster, comes on if there is a problem with arming or disarming the theft-deterrent system.

The system has one or more RKE transmitters matched to an immobilizer control unit in the vehicle. Only a correctly matched RKE transmitter will start the vehicle. If the transmitter is ever damaged, you may not be able to start your vehicle.

When trying to start the vehicle, the security light may come on briefly when the ignition is turned on.

If the engine does not start and the security light stays on, there is a problem with the system. Turn the ignition off and try again.

If the vehicle will not change ignition modes (ACC/ACCESSORY, ON/RUN/START, OFF), and the RKE transmitter appears to be undamaged, try another transmitter. Or, you may try placing the transmitter in the transmitter pocket located in the center console. See *Key and Lock Messages* ⇨ *150*.

If the ignition modes will not change with the other transmitter, your vehicle needs service. If the ignition does change modes, the first transmitter may be faulty. See the dealer.

It is possible for the immobilizer system to learn new or replacement RKE transmitters. Up to eight transmitters can be programmed for the vehicle. To program additional transmitters, see “Programming Transmitters to the Vehicle” under *Remote Keyless Entry (RKE) System Operation* ⇨ *29*.

Do not leave the key or device that disarms or deactivates the theft-deterrent system in the vehicle.

Exterior Mirrors

Convex Mirrors

⚠ Warning

A convex mirror can make things, like other vehicles, look farther away than they really are. If you cut too sharply into the right lane, you could hit a vehicle on the right. Check the inside mirror or glance over your shoulder before changing lanes.

The passenger side mirror is convex shaped. A convex mirror's surface is curved so more can be seen from the driver seat.

Power Mirrors

1. Move the selector switch to L (Left) or R (Right) to choose the driver or passenger mirror.
2. Press one of the four arrows to move the mirror.
3. Move the selector switch to ● to deselect the mirror.

Power Folding Mirrors

If equipped with power folding mirrors, press the down arrow on the control pad while the selector switch is at ●. Press again to unfold.

Auto Mirror Folding

If equipped, with the ignition off, press and hold 🔒 on the RKE transmitter for approximately one second to automatically fold the exterior mirrors. Press and hold 🔓 on the RKE transmitter for approximately one second to unfold. See *Remote Keyless Entry (RKE) System Operation* ⇨ *29*.

This feature is turned on or off through vehicle personalization. See *Vehicle Personalization* ⇨ *157*.

Manual Folding Mirrors

If equipped, the mirrors can be folded inward toward the vehicle to prevent damage when going through an automatic car wash. Push the mirror outward to return it to the original position.

Exterior Automatic Dimming Mirror

The vehicle may have exterior automatic dimming mirrors that will automatically adjust for the glare of headlamps behind.

Memory Mirrors

The vehicle may have memory mirrors. See *Memory Seats* ⇨ *63*.

Lane Change Alert (LCA)

The vehicle may have LCA. See *Lane Change Alert (LCA)* ⇨ *246*.

Turn Signal Indicator

The vehicle has a turn signal indicator on the mirror housings. The indicator will flash when a turn signal or the hazard warning flashers are used.

Heated Mirrors

The rear window defogger also heats the outside mirrors.

: Press to heat the outside mirrors.

See *Automatic Climate Control System (Quad Zone)* ⇨ *178* or *Automatic Climate Control System (Dual Zone)* ⇨ *185*.

Reverse Tilt Mirrors

If equipped with memory seats, the passenger and/or driver mirror tilts to a preselected position when the vehicle is in R (Reverse). This allows the curb to be seen when parallel parking.

The mirror(s) return to the original position when:

- The vehicle is shifted out of R (Reverse), or remains in R (Reverse) for about 30 seconds.
- The ignition is turned off.
- The vehicle is driven in R (Reverse) above a set speed.

To turn this feature on or off, see *Vehicle Personalization* ⇨ *157*.

Interior Mirrors

Interior Rearview Mirrors

Adjust the rearview mirror for a clear view of the area behind your vehicle.

Do not spray glass cleaner directly on the mirror. Use a soft towel dampened with water.

Automatic Dimming Rearview Mirror

The vehicle has an automatic dimming rearview mirror. The mirror will automatically reduce the glare from the headlamps from behind. The dimming feature comes on when the vehicle is started.

Rear Camera Mirror

If equipped, this automatic dimming mirror provides a wide angle camera view of the area behind the vehicle.

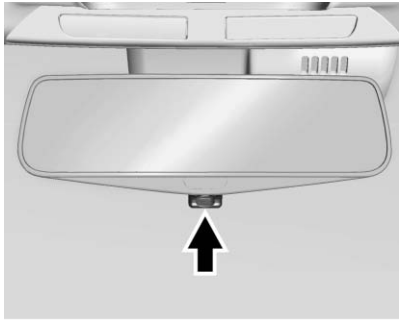

Pull the tab rearward to turn on the display. Push the tab forward to turn it off. When off, the mirror is automatic dimming. Adjust the mirror for a clear view of the area behind the vehicle while the display is off.

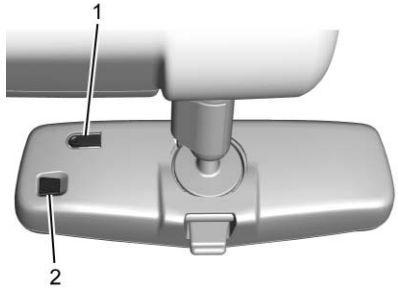

To adjust the brightness, press the button (1) on the back of the rearview mirror without covering the light sensor (2).

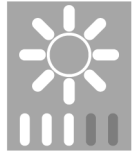

Each button press cycles the brightness between five settings.

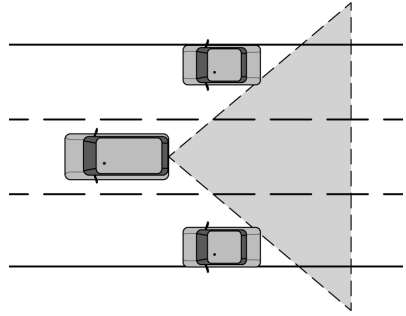

⚠ Warning

The Rear Camera Mirror (RCM) has a limited view. Portions of the road, vehicles, and other objects may not be seen. Do not drive or park the vehicle using only this camera. Objects may appear closer than they are. Check the outside mirrors or glance over your shoulder when making lane changes or merging. Failure to use proper care may result in injury, death, or vehicle damage.

The camera that provides the Rear Camera Mirror (RCM) image is above the license plate, next to the Rear Vision Camera (RVC).

Troubleshooting

If the tab is in the rearward position and a blue screen and are displayed in the mirror and the display shuts off, see your dealer for service.

The RCM may not work properly or display a clear image if:

- There is glare from the sun or headlamps. This may obstruct objects from view.
- Dirt, snow, or other debris blocks the camera lens. Clean the lens with a soft damp cloth.
- The back of the vehicle has been damaged and the position and mounting angle of the camera has changed.

Windows

⚠ Warning

Never leave a child, a helpless adult, or a pet alone in a vehicle, especially with the windows closed in warm or hot weather. They can be overcome by the extreme heat and suffer permanent injuries or even death from heat stroke.

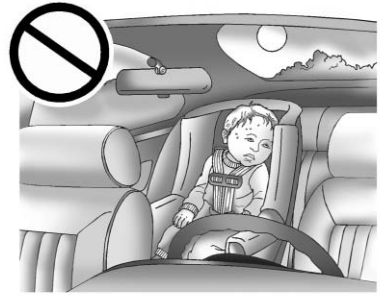

The vehicle aerodynamics are designed to improve fuel economy performance. This may result in a

pulsing sound when either rear window is down and the front windows are up. To reduce the sound, open either a front window or the sunroof, if equipped.

Power Windows

⚠ Warning

Children could be seriously injured or killed if caught in the path of a closing window. Never leave keys in a vehicle with children. When there are children in the rear seat, use the window lockout button to prevent operation of the windows. See *Keys* ⇨ *28*.

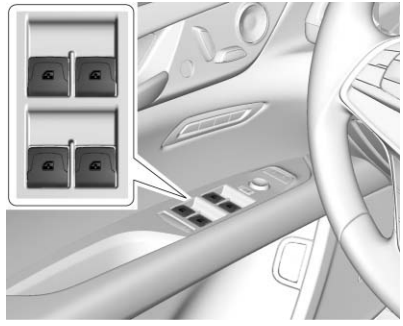

The driver power window switches control all the windows. The passenger switch controls only that window.

Press the switch down to open the window. Pull the switch up to close it.

The windows are operable when the ignition is in ON/RUN, ACC/ACCESSORY, or when Retained Accessory Power (RAP) is active. See *Retained Accessory Power (RAP)* ⇨ *206*.

Express-Down/Up Windows

The express feature allows the windows to be raised and lowered all the way without holding the switch.

Press or pull the switch fully and release it to activate the express feature.

Cancel the express mode by briefly pressing or pulling the switch.

Express Window Anti-Pinch Feature

If any object is in the path of the window when the express-up is active, the window will stop at the obstruction and auto-reverse to a preset factory position. Weather conditions such as severe icing may also cause the window to auto-reverse. The window will return to normal operation after the obstruction or condition is removed.

Express Window Anti-Pinch Override

⚠ Warning

If express override is activated, the window will not reverse automatically. You or others could be injured and the window could be damaged. Before you use express override, make sure that all people and obstructions are clear of the window path.

To override the anti-pinch feature, hold the window switch all the way up to the second position. The window will raise for as long as the switch is held. Once the switch is released, the express mode is reactivated.

In this mode, the window can close on an object in its path. Use care when using the override mode.

Programming the Power Windows

If the vehicle battery has been recharged or disconnected, or is not working, the front power windows will need to be reprogrammed for the express-up feature to work. Before reprogramming, replace or recharge the vehicle's battery.

To program:

1. With the ignition in ON/RUN or ACC/ACCESSORY, or when Retained Accessory Power (RAP) is active, close all doors.
2. Pull and hold the power window switch up until the window is fully closed. Continue holding the switch up for two seconds after the window closes.
3. Press and hold the power window switch down until the window is fully open. Continue holding the switch down for two seconds.

The window is now reprogrammed. Repeat the process for the other windows.

Comfort Open

When Comfort Open is enabled in the vehicle personalization menu, press and hold 🔒 on the RKE transmitter until the windows fully open. See “Remote Window Operation” under *Vehicle Personalization* ⇨ *157*.

Window Lockout

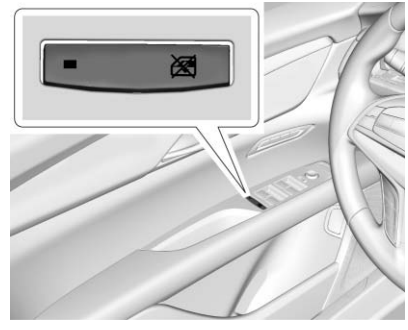

This feature prevents the rear windows from operating except from the driver position.

Press to activate the rear window lockout. The indicator light will illuminate when on.

Press again to deactivate the rear window lockout.

Sun Visors

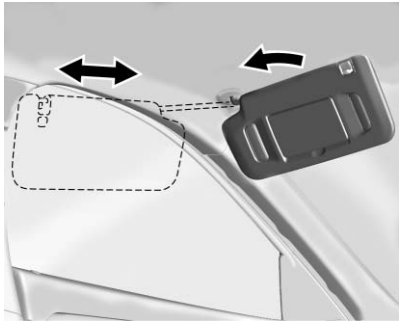

Pull the sun visor down to block glare. Detach the sun visor from the center mount to pivot to the side window, or to extend along the rod.

Rear Window Sunshade

If equipped, press and release the switch. The rear window sunshade will fully extend. To close the sunshade, press and release the switch again. The sunshade will fully close.

When shifting the vehicle into R (Reverse), the rear window sunshade will automatically retract if it is extended. It may re-extend after a short delay when shifting into D (Drive).

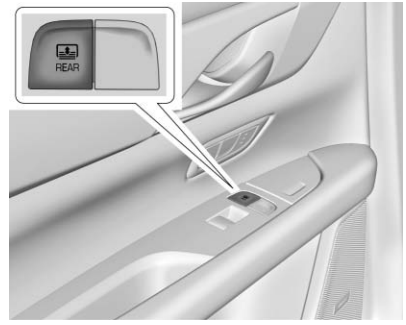

There is also a control for the rear window sunshade on the rear door panel.

Rear Passenger Door Sunshades

If equipped, use the handle to pull the sunshade up and attach to the holder at the top of the window.

To close the sunshade, use the handle to unhook and hold it while it retracts down.

Roof

Sunroof

If equipped with a sunroof, the ignition must be in ON/RUN or ACC/ACCESSORY, or in Retained Accessory Power (RAP), to operate the sunroof. See *Ignition Positions* ⇨ *202* and *Retained Accessory Power (RAP)* ⇨ *206*.

1. SLIDE Switch
2. TILT Switch

Open/Close : Press the rear or front of the switch (1) to the first detent and hold to open or close the sunroof.

Express Open/Express Close : Press the rear or front of the switch (1) to the second detent and release to express open or express close the sunroof.

Vent Feature : Press and hold the front of the switch (2) to vent the sunroof. Press and hold the rear of the switch (2) to close the sunroof vent.

Power Sunshades

If equipped, press to open or close the front sunroof sunshade.

If equipped, press to open or close the rear sunroof sunshade.

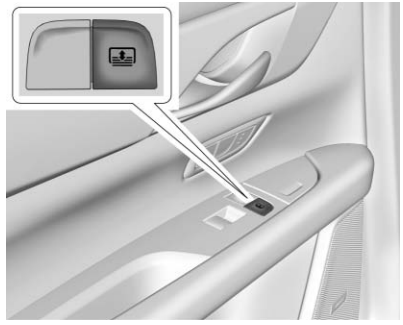

The rear door panels have controls for the rear sunroof sunshade. Press to open or close.

Automatic Reversal System

The sunroof/sunshade is equipped with an automatic reversal system that is only active when the sunroof/sunshade is being operated in express mode. If an object is in the path of the sunroof/sunshade while it is express-closing, the reversal system will detect the object and stop. In the event of closing difficulties like frost or other conditions, it is possible to override the reversal system. To override the reversal system, close in manual mode. To stop the movement, release the switch.

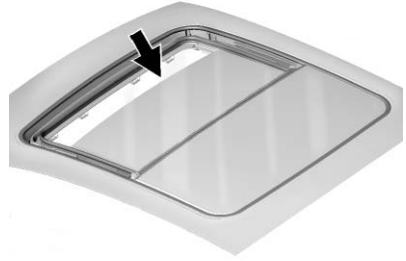

Dirt and debris may collect on the sunroof seal or in the track. This could cause an issue with sunroof operation or noise. It could also plug the water drainage system. Periodically open the sunroof and remove any obstacles or loose debris. Wipe the sunroof seal and roof sealing area using a clean cloth, mild soap, and water. Do not remove grease from the sunroof.

If water is seen dripping into the water drainage system, this is normal.

Seats and Restraints

Head Restraints
Head Restraints 58

Front Seats
Power Seat Adjustment 60
Lumbar Adjustment 60
Thigh Support Adjustment 61
Reclining Seatbacks 62
Memory Seats 63
Heated and Ventilated Front Seats 64
Massage 66

Rear Seats
Rear Seats 66
Lumbar Adjustment 68
Rear Seat Armrest 68
Heated and Ventilated Rear Seats 69
Rear Seat Pass-Through Door 69

Safety Belts
Safety Belts 70
How to Wear Safety Belts Properly 71
Lap-Shoulder Belt 72
Safety Belt Use During Pregnancy 74
Safety Belt Extender 75
Safety System Check 75
Safety Belt Care 75
Replacing Safety Belt System Parts after a Crash 75

Airbag System
Airbag System 76
Where Are the Airbags? 78
When Should an Airbag Inflate? 79
What Makes an Airbag Inflate? 80
How Does an Airbag Restrain? 80
What Will You See after an Airbag Inflates? 81
Passenger Sensing System . . . 82
Servicing the Airbag-Equipped Vehicle 86
Adding Equipment to the Airbag-Equipped Vehicle 86
Airbag System Check 87
Replacing Airbag System Parts after a Crash 87

Child Restraints
Older Children 88
Infants and Young Children 90
Child Restraint Systems 92
Where to Put the Restraint 94
Lower Anchors and Tethers for Children (LATCH System) 95
Replacing LATCH System Parts After a Crash 100
Securing Child Restraints (Rear Seat) 101
Securing Child Restraints (Front Passenger Seat) 103

Head Restraints

The vehicle’s front seats have adjustable head restraints in the outboard seating positions.

⚠ Warning

With head restraints that are not installed and adjusted properly, there is a greater chance that occupants will suffer a neck/spinal injury in a crash. Do not drive until the head restraints for all occupants are installed and adjusted properly.

If your vehicle has rear head restraints that fold down, always return them to the full upright position whenever an occupant is seated in the seat.

Adjust the head restraint so that the top of the restraint is at the same height as the top of the occupant's head. This position reduces the chance of a neck injury in a crash.

Front Seats

The vehicle's front seats have adjustable head restraints in the outboard seating positions.

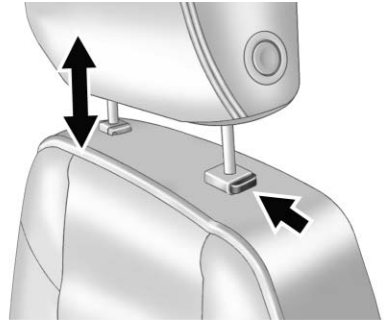

Pull the head restraint up to raise it. Try to move the head restraint to make sure that it is locked in place.

To lower the head restraint, press the button located on top of the seatback, and push the head restraint down. Try to move the head restraint after the button is released to make sure that it is locked in place.

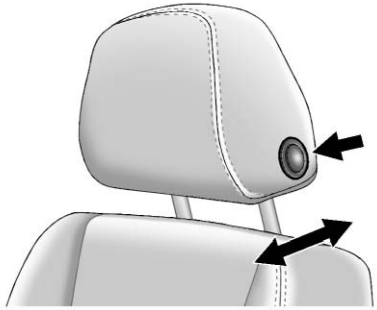

The fore and aft position of the head restraint can be adjusted.

To adjust the head restraint forward and rearward, press the button located on the side facing of the head restraint and move it forward or rearward until the desired locking position is reached. Try to move the head restraint after the button is released to make sure that it is locked in place.

The front seat outboard head restraints are not designed to be removed.

Rear Seats

The vehicle's rear seats have adjustable head restraints in the outboard seating positions.

The height of the head restraint can be adjusted. Pull the head restraint up to raise it. Try to move the head restraint to make sure that it is locked in place.

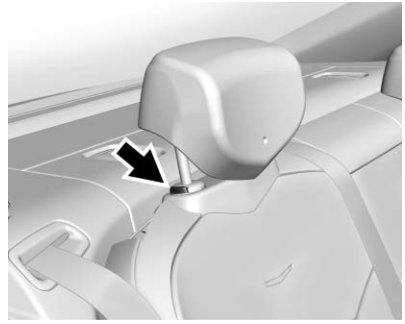

To lower the head restraint, press the button, located on the top of the seatback, and push the head restraint down. Try to move the head restraint after the button is released to make sure that it is locked in place.

Always adjust the head restraint so that the top of the restraint is at the same height as the top of the occupant's head.

Rear outboard head restraints are not removable.

The rear outboard head restraints are not designed to be folded.

Front Seats

Power Seat Adjustment

⚠ Warning

You can lose control of the vehicle if you try to adjust a driver seat while the vehicle is moving. Adjust the driver seat only when the vehicle is not moving.

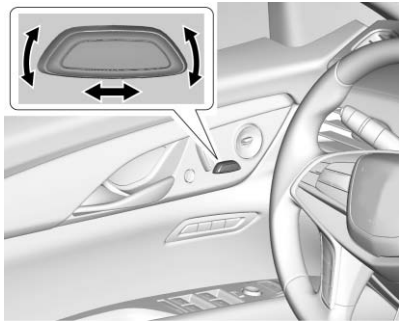

Platinum Seat Shown

To adjust:

- Move the seat forward or rearward by sliding the control forward or rearward.
- Raise or lower the front part of the seat cushion by moving the front of the control up or down.
- Raise or lower the seat by moving the rear of the control up or down.

To adjust the seatback, see *Reclining Seatbacks* ⇨ *62*.

To adjust the lumbar support, see *Lumbar Adjustment* ⇨ *60*.

Some vehicles are equipped with a feature that activates a vibrating pulse alert in the driver seat to help avoid crashes. See *Driver Assistance Systems* ⇨ *230*.

Lumbar Adjustment

Uplevel Lumbar and Bolster Adjustment

If equipped, the ignition must be on to use all uplevel seat features.

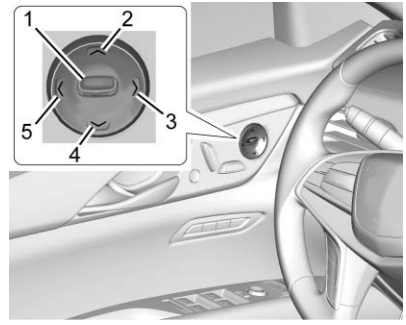

Platinum Seat

1. Feature Select
2. Up
3. Forward
4. Down
5. Rearward

- Toggle the Feature Select (1), if equipped, to view adjustable seat options on the center stack display.
- Select lumbar support.
- Press Up (2) to move lumbar support upward.
- Press Forward (3) to move lumbar support inward.

- Press Down (4) to move lumbar support down.
- Press Rearward (5) to move lumbar support outward.

To adjust upper back support, if equipped:

- Toggle the Feature Select (1), if equipped, to view adjustable seat options on the center stack display.
- Press Forward (3) to move support inward or Rearward (5) to move support outward.

Base Lumbar Adjustment

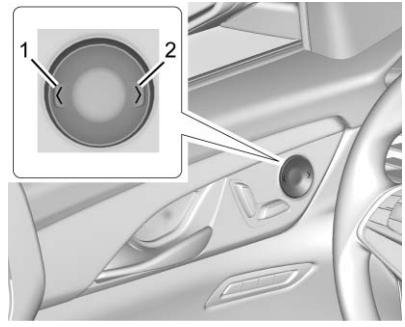

Base Seat Shown

To adjust lumbar support, if equipped:

1. Forward
2. Rearward

- Press Forward (1) to move lumbar support inward.
- Press Rearward (2) to move lumbar support outward.

Thigh Support Adjustment

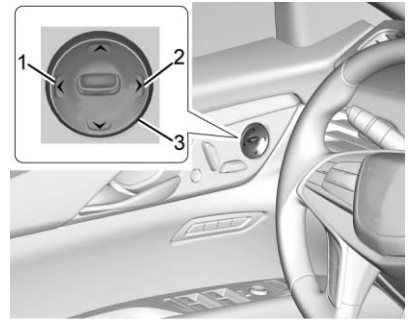

To adjust thigh support, if equipped:

1. Turn the selection control (3) to view seat options on the center stack display.
2. Select cushion length adjuster.
3. Press and hold the control forward (2) to increase or rearward (1) to decrease cushion length.

Reclining Seatbacks

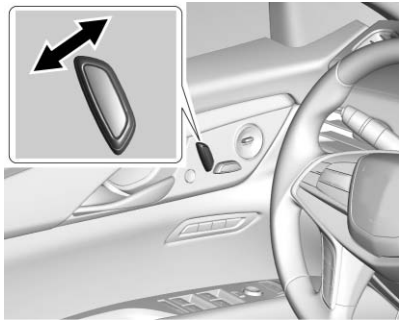

Platinum Seat Shown

To adjust:

- Tilt the top of the control rearward to recline.
- Tilt the top of the control forward to raise the seatback.

⚠ Warning

Sitting in a reclined position when the vehicle is in motion can be dangerous. Even when buckled up, the safety belts cannot do their job.

The shoulder belt will not be against your body. Instead, it will be in front of you. In a crash, you could go into it, receiving neck or other injuries.

The lap belt could go up over your abdomen. The belt forces would be there, not at your pelvic bones. This could cause serious internal injuries.

For proper protection when the vehicle is in motion, have the seatback upright. Then sit well back in the seat and wear the safety belt properly.

Do not have a seatback reclined if the vehicle is moving.

Memory Seats

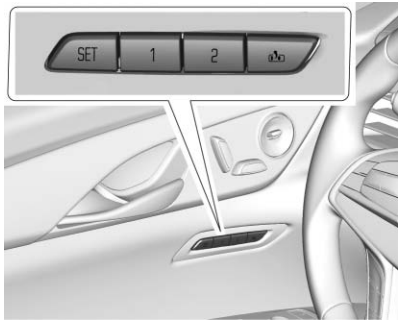

Platinum Driver Seat Buttons Shown, Passenger Buttons Similar

If equipped, the SET, 1, 2, and (Exit) buttons on the driver door and front passenger door are used to manually store and recall memory settings for the driver and passenger seats. The driver memory buttons also store outside mirror, power tilt and telescoping steering column positions, and massage settings, if equipped.

Storing Memory Positions

To store positions to the 1 and 2 buttons:

1. The ignition must be in ON/RUN or ACC/ACCESSORY.
2. Adjust the driver seat, power tilt and telescoping steering column, if equipped, massage type and intensity, if equipped, and the outside mirrors on some vehicles.
3. Press and release SET. A beep will sound.
4. Immediately press and hold 1 until two beeps sound.
5. Repeat Steps 1–4 for a second driver using 2.

To store exit positions and easy exit features to the (Exit) button, repeat Steps 1–4 using to store your positions for getting out of the vehicle (driver only).

Manually Recalling Memory Positions

Press and hold 1, 2, or to manually recall the previously stored memory positions. Releasing 1, 2, or before the stored positions are reached stops the recall.

If the massage feature is off when the memory recall is performed, the previously stored type and intensity will be recalled, but it will remain off until activated with the On/Off control or through the center stack with the platinum seat controls.

Automatically Recalling Memory Positions (Auto Memory Recall) (Driver Only)

If programmed on in the vehicle personalization menu, the Auto (Automatic) Memory Recall feature automatically recalls the current driver’s previously stored 1 or 2 position when the ignition is changed from OFF to ON/RUN or ACC/ACCESSORY.

See “Auto Memory Recall’ under “Comfort and Convenience” in *Vehicle Personalization* ⇨ *157*.

To stop recall movement, press one of the memory, power mirror, or power seat controls; or press the power tilt and telescoping steering column control.

If the vehicle’s driver has changed, in some vehicles the Driver ID may be displayed for the first few ignition cycles.

RKE transmitters are not labeled with a number. If your memory seat position is stored to 1 or 2 but this position is not automatically recalling, then store your positions to the other button or switch RKE transmitters with the other driver.

Easy Exit Recall (Driver Only)

If programmed on in the vehicle personalization menu, the easy exit feature automatically recalls the previously stored exit positions when leaving the vehicle. See “Storing Memory Positions” earlier in this section. See also *Vehicle Personalization* ⇨ *157*.

Easy exit recall automatically activates when one of the following occurs:

- The vehicle is turned off and the driver door is opened within a short time.
- The vehicle is turned off with the driver door open.

Obstructions

If something has blocked the driver seat while recalling a memory position, the recall may stop. Remove the obstruction. Then do one of the following:

- If automatically or manually recalling the stored memory position, press and hold the appropriate manual control for two seconds. Try recalling again by pressing the appropriate memory button. If automatically recalling the position, try recalling again by opening the driver door and pressing 🔓 on the RKE transmitter.
- If recalling the exit position, press and hold the appropriate manual control for the exit feature not recalling for two seconds. Then try recalling the exit position again.

If the memory position is still not recalling, see your dealer for service.

Heated and Ventilated Front Seats

⚠ Warning

If you cannot feel temperature change or pain to the skin, the seat heater may cause burns. To reduce the risk of burns, people with such a condition should use care when using the seat heater, especially for long periods of time. Do not place anything on the seat that insulates against heat, such as a blanket, cushion, cover, or similar item. This may cause the seat heater to overheat. An overheated seat heater may cause a burn or may damage the seat.

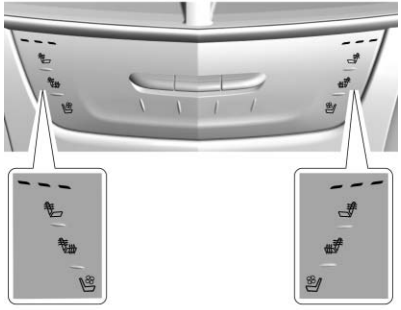

If equipped, the buttons are near the climate controls on the center stack. To operate, the ignition must be on.

Press or to heat the driver or passenger seat cushion and seatback.

Press or to heat the driver or passenger seatback only.

Press or to ventilate the driver or passenger seat.

Press the button once for the highest setting. With each press of the button, the seat will change to the next lower setting, and then to the off setting. The indicator lights next to the buttons indicate three for the highest setting and one for the lowest. If the front heated seats are on high, the level may automatically be lowered after approximately 30 minutes.

When this feature is off, the heated and ventilated seat symbols on the buttons are white. A ventilated seat has a fan that pulls or pushes air through the seat. The air is not cooled. When a heated seat is turned on, the symbol turns red. When a ventilated seat is turned on, the symbol turns blue.

The passenger seat may take longer to heat up.

Auto Heated Seats

When the vehicle is on, this feature will automatically activate the heated seats at the level required by the vehicle's interior temperature.

The active high, medium, low, or off heated seat level will be indicated by the manual heated seat buttons on the center stack. Use the manual heated seat buttons on the center stack to turn auto heated seats off.

If the passenger seat is unoccupied, the auto heated seats feature will not activate that seat. The auto heated seats feature can be programmed to always be enabled when the vehicle is on.

See *Vehicle Personalization* ⇨ *157*.

Remote Start Heated and Ventilated Seats

During a remote start, the heated or ventilated seats, if equipped, can be turned on automatically. When it is cold outside, the heated seats turn on, and when it is hot outside the ventilated seats turn on. The heated or ventilated seats are canceled when the ignition is turned on. Press the heated or ventilated seat button to use the heated or ventilated seats after the vehicle is started.

The heated or ventilated seat indicator lights do not turn on during a remote start.

The temperature performance of an unoccupied seat may be reduced. This is normal.

The heated or ventilated seats may be enabled or disabled in the vehicle personalization menu. See *Remote Vehicle Start* ⇨ *36* and *Vehicle Personalization* ⇨ *157*.

Massage

Massage

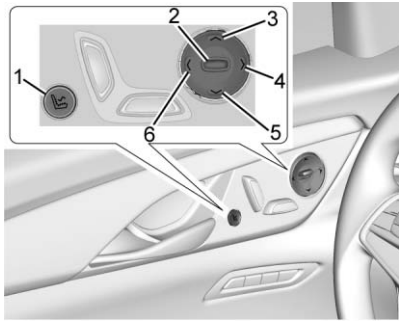

Platinum Driver Seat Shown, Passenger Seat Similar

If equipped, the ignition must be on to use the massage feature.

To activate and adjust the massage feature:

1. Toggle the center selection control (2) located on the door to view adjustable massage options on the center stack display.
2. Select massage feature.
3. Press the control up (3) or down (5) to select the massage type.
4. Press the control forward (4) or rearward (6) to change the intensity.
5. Press the massage control button (1) to recall the last massage type and intensity.

See *Massage* ⇨ *66*.

Rear Seats

⚠ Warning

The power seats will work with the ignition off. Children could operate the power seats and be injured. Never leave children alone in the vehicle.

Caution

Do not adjust the power seat when a child restraint is installed. Adjusting the seat may cause damage to the installed child restraint. Use the window lockout button on the driver door to prevent adjustment of the seat whenever a child restraint is installed.

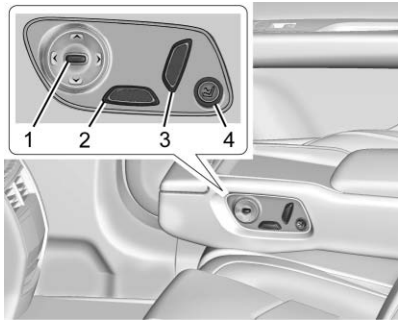

Platinum Rear Seat Shown

If equipped, the armrest may have seat adjustment controls.

1. Seatback Display and Lumbar Adjustment Control
2. Power Seat Adjustment
3. Seatback Recline
4. Massage

When one of the seat controls is triggered, a panel display will be activated from the driver or passenger seatback.

To adjust the seat, if equipped:

- Move the seat forward or rearward by sliding the control (2) forward or rearward.
- Raise or lower the front part of the seat cushion by moving the front of the control (2) up or down.
- Raise or lower the seat by moving the rear of the control (2) up or down.

To recline the rear seatback, if equipped:

- Tilt the top of the control (3) rearward to recline.
- Tilt the top of the control (3) forward to raise.

To activate the massage feature, if equipped:

1. Press the massage control button (4).
2. Press up or down (1) to select the massage type.
3. Press forward or rearward (1) to change the intensity.
4. Press the massage control button (4) to recall the last massage type and intensity.

Easy Exit

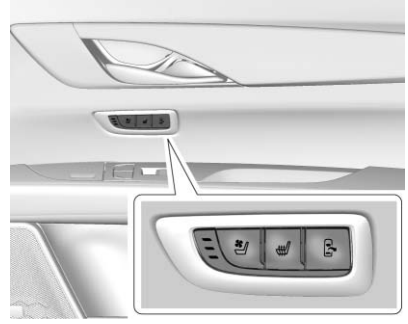

Platinum Seat Shown

If equipped, press to return the seat to the full rearward and full tilt down position. The seat will also move to this position when the rear door is opened.

Lumbar Adjustment

If a child restraint is installed, see *Rear Seats* ⇨ *66*.

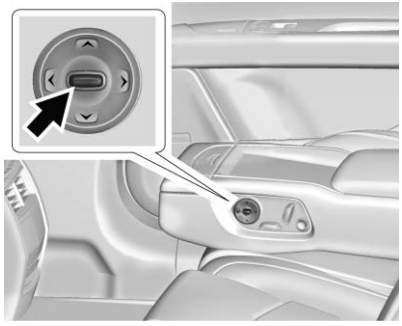

Platinum Rear Seat Shown

If equipped, the armrest may have controls for lumbar and upper back support.

When one of the seat controls is triggered, a panel display will be activated from the driver or passenger seatback.

To adjust lumbar support, if equipped:

1. Toggle the center selection control to view adjustable seat options on the display.
2. Select lumbar support.
3. Press and hold the control forward to increase or rearward to decrease support.
4. Press and hold the control upward to raise or downward to lower the height of the support.

To adjust upper back support, if equipped:

1. Toggle the center selection control to view adjustable seat options on the display.
2. Select upper back support.
3. Press and hold the control forward to increase or rearward to decrease support.

Rear Seat Armrest

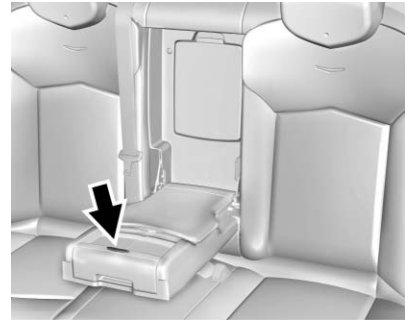

Fixed Center Seat Shown, Adjustable Center Seat Similar

The rear seat has an armrest in the center of the seatback. Lower the armrest and press the button at the front of the armrest to access the cupholders.

To fold, press the cupholders into the seat if they have been opened, lift the armrest up, and push it rearward until it is flush with the seatback.

Heated and Ventilated Rear Seats

⚠ Warning

If you cannot feel temperature change or pain to the skin, the seat heater may cause burns. See the Warning under *Heated and Ventilated Front Seats* ⇨ *64*.

Platinum Seat

If equipped, the buttons are on the rear passenger doors.

With the ignition in ON/RUN, press or to heat the left or right outboard seat cushion.

With the ignition in ON/RUN, press or to ventilate the left or right outboard seat.

On vehicles without rear climate controls, an indicator light on the button will turn on when the heated or ventilated seat is on. On vehicles with rear climate controls, an indicator on the climate control display appears when this feature is on.

On vehicles without rear climate controls, press the button again to turn this feature off. The light on the button will turn off. On vehicles with rear climate controls, this feature turns on the heated seat at the highest setting. With each press of the button, the heated seat changes to the next lower setting, and then the off setting. Three lights indicate the highest setting, and one light indicates the lowest. If the heated seats are on high, the level may automatically be lowered after approximately 30 minutes.

Rear Seat Pass-Through Door

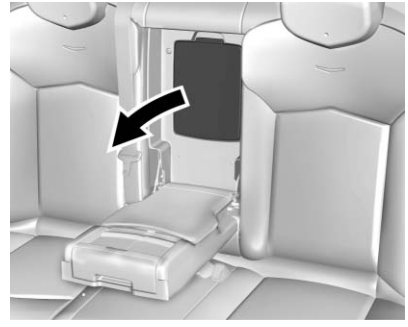

Some vehicles have a rear seat pass-through door in the center of the rear seatback. Fold down the center armrest and pull the latch to open the door.

Safety Belts

This section of the manual describes how to use safety belts properly. It also describes some things not to do with safety belts.

⚠ Warning

Do not let anyone ride where a safety belt cannot be worn properly. In a crash, if you or your passenger(s) are not wearing safety belts, injuries can be much worse than if you are wearing safety belts. You can be seriously injured or killed by hitting things inside the vehicle harder or by being ejected from the vehicle. In addition, anyone who is not buckled up can strike other passengers in the vehicle.

It is extremely dangerous to ride in a cargo area, inside or outside of a vehicle. In a collision, passengers riding in these areas are more likely to be seriously injured or killed. Do not allow

(Continued)

Warning (Continued)

passengers to ride in any area of the vehicle that is not equipped with seats and safety belts.

Always wear a safety belt, and check that all passenger(s) are restrained properly too.

This vehicle has indicators as a reminder to buckle the safety belts. See *Safety Belt Reminders* ⇨ *129*.

Why Safety Belts Work

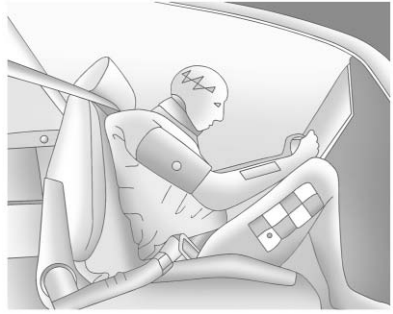

When riding in a vehicle, you travel as fast as the vehicle does. If the vehicle stops suddenly, you keep going until something stops you. It could be the windshield, the instrument panel, or the safety belts!

When you wear a safety belt, you and the vehicle slow down together. There is more time to stop because you stop over a longer distance and, when worn properly, your strongest bones take the forces from the safety belts. That is why wearing safety belts makes such good sense.

Questions and Answers About Safety Belts

Q: Will I be trapped in the vehicle after a crash if I am wearing a safety belt?

A: You *could* be — whether you are wearing a safety belt or not. Your chance of being conscious during and after a crash, so you *can* unbuckle and get out, is *much* greater if you are belted.

Q: If my vehicle has airbags, why should I have to wear safety belts?

A: Airbags are supplemental systems only; so they work *with* safety belts — not instead of them. Whether or not an airbag is provided, all occupants still have to buckle up to get the most protection.

Also, in nearly all states and in all Canadian provinces, the law requires wearing safety belts.

How to Wear Safety Belts Properly

This section is only for people of adult size.

There are special things to know about safety belts and children. And there are different rules for smaller children and infants. If a child will be riding in the vehicle, see *Older Children* ⇨ *88* or *Infants and Young Children* ⇨ *90*. Follow those rules for everyone's protection.

It is very important for all occupants to buckle up. Statistics show that unbelted people are hurt more often in crashes than those who are wearing safety belts.

There are important things to know about wearing a safety belt properly.

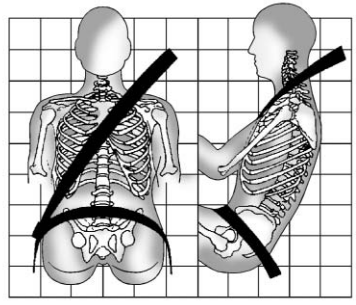

- Sit up straight and always keep your feet on the floor in front of you.
- Always use the correct buckle for your seating position.
- Wear the lap part of the belt low and snug on the hips, just touching the thighs. In a crash, this applies force to the strong pelvic bones and you would be less likely to slide under the lap belt. If you slid under it, the belt would apply force on your abdomen. This could cause serious or even fatal injuries.
- Wear the shoulder belt over the shoulder and across the chest. These parts of the body are best able to take belt restraining forces. The shoulder belt locks if there is a sudden stop or crash.

⚠ Warning

You can be seriously injured, or even killed, by not wearing your safety belt properly.

- Never allow the lap or shoulder belt to become loose or twisted.
- Never wear the shoulder belt under both arms or behind your back.
- Never route the lap or shoulder belt over an armrest.

Lap-Shoulder Belt

All seating positions in the vehicle have a lap-shoulder belt.

The following instructions explain how to wear a lap-shoulder belt properly.

1. Adjust the seat, if the seat is adjustable, so you can sit up straight. To see how, see “Seats” in the Index.

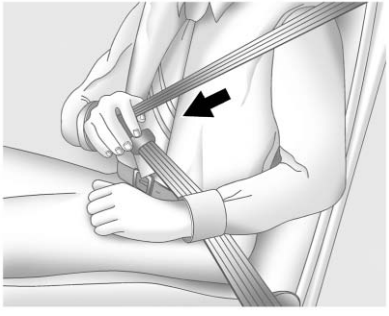

2. Pick up the latch plate and pull the belt across you. Do not let it get twisted.

The lap-shoulder belt may lock if you pull the belt across you very quickly. If this happens, let the belt go back slightly to unlock it. Then pull the belt across you more slowly.

If the shoulder portion of a passenger belt is pulled out all the way, the child restraint locking feature may be engaged. If this happens, let the belt go back all the way and start again.

Engaging the child restraint locking feature in the front outboard seating position may affect the passenger sensing system. See *Passenger Sensing System* ⇨ *82*.

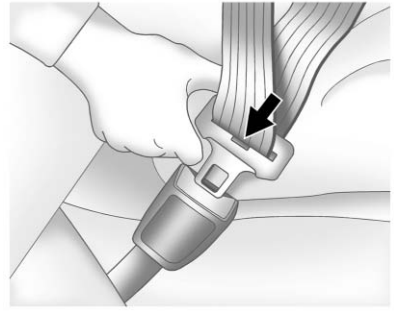

3. Push the latch plate into the buckle until it clicks.

   Pull up on the latch plate to make sure it is secure. If the belt is not long enough, see *Safety Belt Extender* ⇨ *75*.

   Position the release button on the buckle so that the safety belt could be quickly unbuckled if necessary.

4. If equipped with a shoulder belt height adjuster, move it to the height that is right for you. See “Shoulder Belt Height Adjuster” later in this section for instructions on use and important safety information.

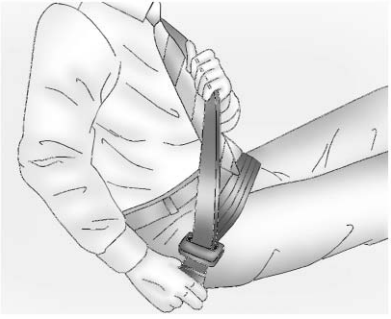

5. To make the lap part tight, pull up on the shoulder belt.

To unlatch the belt, push the button on the buckle. The belt should return to its stowed position.

Always stow the safety belt slowly. If the safety belt webbing returns quickly to the stowed position, the retractor may lock and cannot be pulled out. If this happens, pull the safety belt straight out firmly to unlock the webbing, and then release it. If the webbing is still locked in the retractor, see your dealer.

Before a door is closed, be sure the safety belt is out of the way. If a door is slammed against a safety belt, damage can occur to both the safety belt and the vehicle.

Shoulder Belt Height Adjuster

The vehicle has a shoulder belt height adjuster for the driver and right front passenger seating positions.

Adjust the height so the shoulder portion of the belt is on the shoulder and not falling off of it. The belt should be close to, but not contacting, the neck. Improper shoulder belt height adjustment could reduce the effectiveness of the safety belt in a crash. See *How to Wear Safety Belts Properly* ⇨ *71*.

Press the release button and move the height adjuster to the desired position. The adjuster can be moved up by pushing the slide/trim up. After the adjuster is set to the desired position, try to move it down without pushing the release button to make sure it has locked into position.

Automatic Safety Belt Tightening System

The vehicle may have the Automatic Safety Belt Tightening System.

The system activates during emergency braking and/or sudden driving maneuvers and releases when driving conditions return to normal.

The system will not activate if the Traction Control/Electronic Stability Control system is not functioning properly. See *Traction Control/ Electronic Stability Control* ⇨ *217*. If there is a problem with the Automatic Safety Belt Tightening System, a message displays on the Driver Information Center (DIC). See *Safety Belt Messages* ⇨ *154*. Other safety belt functions are not affected by the Automatic Safety Belt Tightening System.

Safety Belt Pretensioners

This vehicle has safety belt pretensioners for front outboard occupants. Although the safety belt pretensioners cannot be seen, they are part of the safety belt assembly. They can help tighten the safety belts during the early stages of a moderate to severe frontal, near frontal, or rear crash if the threshold conditions for pretensioner activation are met. Safety belt pretensioners can also help tighten the safety belts in a side crash or a rollover event.

Pretensioners work only once. If the pretensioners activate in a crash, the pretensioners and probably other parts of the vehicle's safety belt system will need to be replaced. See *Replacing Safety Belt System Parts after a Crash* ⇨ *75*.

Rear Safety Belt Comfort Guides

Rear safety belt comfort guides may provide added safety belt comfort for older children who have outgrown booster seats and for some adults. When installed on a shoulder belt, the comfort guide positions the belt away from the neck and head.

Comfort guides are available through your dealer for the rear outboard seating positions. Instructions are included with the guide.

Safety Belt Use During Pregnancy

Safety belts work for everyone, including pregnant women. Like all occupants, they are more likely to be seriously injured if they do not wear safety belts.

A pregnant woman should wear a lap-shoulder belt, and the lap portion should be worn as low as possible, below the rounding, throughout the pregnancy.

The best way to protect the fetus is to protect the mother. When a safety belt is worn properly, it is more likely that the fetus will not be hurt in a crash. For pregnant women, as for anyone, the key to making safety belts effective is wearing them properly.

Safety Belt Extender

If the vehicle's safety belt will fasten around you, you should use it.

But if a safety belt is not long enough, your dealer will order you an extender. When you go in to order it, take the heaviest coat you will wear, so the extender will be long enough for you. To help avoid personal injury, do not let someone else use it, and use it only for the seat it is made to fit. The extender has been designed for adults. Never use it for securing child seats. To wear it, attach it to the regular safety belt. For more information, see the instruction sheet that comes with the extender.

Safety System Check

Now and then, check that the safety belt reminder light, safety belts, buckles, latch plates, retractors, and anchorages are all working properly. Look for any other loose or damaged safety belt system parts that might keep a safety belt system from doing its job. See your dealer to have it repaired. Torn or frayed safety belts may not protect you in a crash. They can rip apart under impact forces. If a belt is torn or frayed, get a new one right away.

Make sure the safety belt reminder light is working. See *Safety Belt Reminders* ⇨ *129*.

Keep safety belts clean and dry. See *Safety Belt Care* ⇨ *75*.

Safety Belt Care

Keep belts clean and dry.

⚠ Warning

Do not bleach or dye safety belt webbing. It may severely weaken the webbing. In a crash, they might not be able to provide adequate protection. Clean and rinse safety belt webbing only with mild soap and lukewarm water. Allow the webbing to dry.

Replacing Safety Belt System Parts after a Crash

⚠ Warning

A crash can damage the safety belt system in the vehicle.
A damaged safety belt system may not properly protect the person using it, resulting in serious injury or even death in a crash. To help make sure the safety belt systems are working properly after a crash, have them

(Continued)

Warning (Continued)

inspected and any necessary replacements made as soon as possible.

After a minor crash, replacement of safety belts may not be necessary. But the safety belt assemblies that were used during any crash may have been stressed or damaged. See your dealer to have the safety belt assemblies inspected or replaced.

New parts and repairs may be necessary even if the safety belt system was not being used at the time of the crash.

Have the safety belt pretensioners checked if the vehicle has been in a crash, or if the airbag readiness light stays on after you start the vehicle or while you are driving. See *Airbag Readiness Light* ⇨ *130*.

Airbag System

The vehicle has the following airbags:

- A frontal airbag for the driver.
- A frontal airbag for the front outboard passenger.
- A knee airbag for the driver.
- A knee airbag for the front outboard passenger.
- A seat-mounted side impact airbag for the driver.
- A seat-mounted side impact airbag for the front outboard passenger.
- A roof-rail airbag for the driver and the passenger seated directly behind the driver.
- A roof-rail airbag for the front outboard passenger and the passenger seated directly behind the front outboard passenger.

All vehicle airbags have the word AIRBAG on the trim or on a label near the deployment opening.

For frontal airbags, the word AIRBAG is on the center of the steering wheel for the driver and on the instrument panel for the front outboard passenger.

For knee airbags, the word AIRBAG is on the lower part of the instrument panel.

For seat-mounted side impact airbags, the word AIRBAG is on the side of the seatback closest to the door.

For roof-rail airbags, the word AIRBAG is on the ceiling or trim.

Airbags are designed to supplement the protection provided by safety belts. Even though today's airbags are also designed to help reduce the risk of injury from the force of an inflating bag, all airbags must inflate very quickly to do their job.

Here are the most important things to know about the airbag system:

⚠ Warning

You can be severely injured or killed in a crash if you are not wearing your safety belt, even with airbags. Airbags are designed to work with safety belts, not replace them. Also, airbags are not designed to inflate in every crash. In some crashes safety belts are the only restraint. See *When Should an Airbag Inflate?* ⇨ *79*.

Wearing your safety belt during a crash helps reduce the chance of hitting things inside the vehicle or being ejected from it. Airbags are “supplemental restraints” to the safety belts. Everyone in the vehicle should wear a safety belt properly, whether or not there is an airbag for that person.

⚠ Warning

Because airbags inflate with great force and faster than the blink of an eye, anyone who is up against, or very close to any airbag when it inflates can be seriously injured or killed. Do not sit unnecessarily close to any airbag, as you would be if sitting on the edge of the seat or leaning forward. Safety belts help keep you in position before and during a crash. Always wear a safety belt, even with airbags. The driver should sit as far back as possible while still maintaining control of the vehicle. The safety belts and the front outboard passenger airbags are most effective when you are sitting well back and upright in the seat with both feet on the floor.

Occupants should not lean on or sleep against the door or side windows in seating positions with seat-mounted side impact airbags and/or roof-rail airbags.

⚠ Warning

Children who are up against, or very close to, any airbag when it inflates can be seriously injured or killed. Always secure children properly in the vehicle. To read how, see *Older Children* ⇨ *88* or *Infants and Young Children* ⇨ *90*.

There is an airbag readiness light on the instrument cluster, which shows the airbag symbol. The system checks the airbag electrical system for malfunctions. The light tells you if there is an electrical problem. See *Airbag Readiness Light* ⇨ *130*.

Where Are the Airbags?

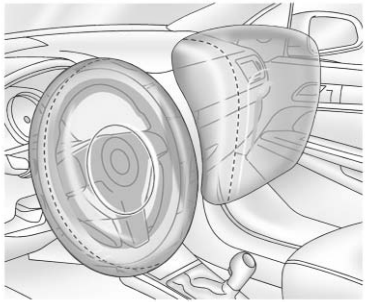

The driver frontal airbag is in the center of the steering wheel.

The front outboard passenger frontal airbag is in the passenger side instrument panel.

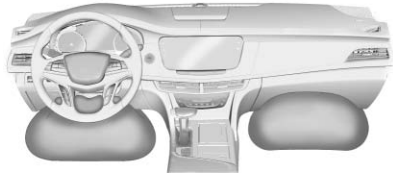

The driver knee airbag is below the steering column. The front outboard passenger knee airbag is below the glove box.

Driver Side Shown, Passenger Side Similar

The roof-rail airbags for the driver, front outboard passenger, and second row outboard passengers are in the ceiling above the side windows.

Driver Side Shown, Passenger Side Similar

The seat-mounted side impact airbags for the driver and front outboard passenger are in the side of the seatbacks closest to the door.

⚠ Warning

If something is between an occupant and an airbag, the airbag might not inflate properly or it might force the object into that person causing severe injury or even death. The path of an inflating airbag must be kept

(Continued)

Warning (Continued)

clear. Do not put anything between an occupant and an airbag, and do not attach or put anything on the steering wheel hub or on or near any other airbag covering.

Do not use seat accessories that block the inflation path of a seat-mounted side impact airbag.

Never secure anything to the roof of a vehicle with roof-rail airbags by routing a rope or tie-down through any door or window opening. If you do, the path of an inflating roof-rail airbag will be blocked.

When Should an Airbag Inflate?

This vehicle is equipped with airbags. See *Airbag System* ⇨ *76*. Airbags are designed to inflate if the impact exceeds the specific airbag system's deployment threshold. Deployment thresholds are used to predict how severe a crash is likely to be in time for the airbags to inflate and help restrain the occupants. The vehicle has electronic sensors that help the airbag system determine the severity of the impact. Deployment thresholds can vary with specific vehicle design.

Frontal airbags are designed to inflate in moderate to severe frontal or near frontal crashes to help reduce the potential for severe injuries, mainly to the driver's or front outboard passenger's head and chest.

Whether the frontal airbags will or should inflate is not based primarily on how fast the vehicle is traveling. It depends on what is hit, the direction of the impact, and how quickly the vehicle slows down.

Frontal airbags may inflate at different crash speeds depending on whether the vehicle hits an object straight on or at an angle, and whether the object is fixed or moving, rigid or deformable, narrow or wide.

Frontal airbags are not intended to inflate during vehicle rollovers, in rear impacts, or in many side impacts.

In addition, the vehicle has advanced technology frontal airbags. Advanced technology frontal airbags adjust the restraint according to either crash severity or occupant interaction.

Knee airbags are designed to inflate in moderate to severe frontal or near frontal impacts. Knee airbags are not designed to inflate during vehicle rollovers, in rear impacts, or in many side impacts.

Seat-mounted side impact airbags are designed to inflate in moderate to severe side crashes depending on the location of the impact. Seat-mounted side impact airbags are not designed to inflate in frontal impacts, near frontal impacts, rollovers, or rear impacts.
A seat-mounted side impact airbag is designed to inflate on the side of the vehicle that is struck.

Roof-rail airbags are designed to inflate in moderate to severe side crashes depending on the location of the impact. In addition, these roof-rail airbags are designed to inflate during a rollover or in a severe frontal impact. Roof-rail airbags are not designed to inflate in rear impacts. Both roof-rail airbags will inflate when either side of the vehicle is struck, if the sensing system predicts that the vehicle is about to roll over on its side, or in a severe frontal impact.

In any particular crash, no one can say whether an airbag should have inflated simply because of the vehicle damage or repair costs.

What Makes an Airbag Inflate?

In a deployment event, the sensing system sends an electrical signal triggering a release of gas from the inflator. Gas from the inflator fills the airbag causing the bag to break out of the cover. The inflator, the airbag, and related hardware are all part of the airbag module.

For airbag locations, see *Where Are the Airbags?* ⇨ *78*.

How Does an Airbag Restrain?

In moderate to severe frontal or near frontal collisions, even belted occupants can contact the steering wheel or the instrument panel. In moderate to severe side collisions, even belted occupants can contact the inside of the vehicle.

Airbags supplement the protection provided by safety belts by distributing the force of the impact more evenly over the occupant's body.

Rollover capable roof-rail airbags are designed to help contain the head and chest of occupants in the outboard seating positions in the first and second rows. The rollover capable roof-rail airbags are designed to help reduce the risk of full or partial ejection in rollover events, although no system can prevent all such ejections.

But airbags would not help in many types of collisions, primarily because the occupant's motion is not toward those airbags. See *When Should an Airbag Inflate?* ⇨ *79*.

Airbags should never be regarded as anything more than a supplement to safety belts.

What Will You See after an Airbag Inflates?

After the frontal airbags and seat-mounted side impact airbags inflate, they quickly deflate, so quickly that some people may not even realize an airbag inflated. Roof-rail airbags may still be at least partially inflated for some time after they inflate. Some components of the airbag module may be hot for several minutes. For location of the airbags, see *Where Are the Airbags?* ⇨ *78*.

The parts of the airbag that come into contact with you may be warm, but not too hot to touch. There may be some smoke and dust coming from the vents in the deflated airbags. Airbag inflation does not prevent the driver from seeing out of the windshield or being able to steer the vehicle, nor does it prevent people from leaving the vehicle.

⚠ Warning

When an airbag inflates, there may be dust in the air. This dust could cause breathing problems for people with a history of asthma or other breathing trouble. To avoid this, everyone in the vehicle should get out as soon as it is safe to do so. If you have breathing problems but cannot get out of the vehicle after an airbag inflates, then get fresh air by opening a window or a door. If you experience breathing problems following an airbag deployment, you should seek medical attention.

The vehicle has a feature that may automatically unlock the doors, turn on the interior lamps and hazard warning flashers, and shut off the fuel system after the airbags inflate. The feature may also activate, without airbag inflation, after an event that exceeds a predetermined threshold. You can lock the doors, and turn off the interior lamps, and turn off the hazard warning flashers by using the controls for those features.

⚠ Warning

A crash severe enough to inflate the airbags may have also damaged important functions in the vehicle, such as the fuel system, brake and steering systems, etc. Even if the vehicle appears to be drivable after a moderate crash, there may be concealed damage that could make it difficult to safely operate the vehicle.

Use caution if you should attempt to restart the engine after a crash has occurred.

In many crashes severe enough to inflate the airbag, windshields are broken by vehicle deformation.

Additional windshield breakage may also occur from the front outboard passenger airbag.

- Airbags are designed to inflate only once. After an airbag inflates, you will need some new parts for the airbag system. If you do not get them, the airbag system will not be there to help protect you in another crash. A new system will include airbag modules and possibly other parts. The service manual for the vehicle covers the need to replace other parts.
- The vehicle has a crash sensing and diagnostic module which records information after a crash. See *Vehicle Data Recording and Privacy* ⇨ *372* and *Event Data Recorders* ⇨ *373*.
- Let only qualified technicians work on the airbag systems. Improper service can mean that an airbag system will not work properly. See your dealer for service.

Passenger Sensing System

The vehicle has a passenger sensing system for the front outboard passenger position. The passenger airbag status indicator will light on the overhead console when the vehicle is started.

United States

Canada

The words ON and OFF, or the symbol for on and off, will be visible during the system check. When the system check is complete, either the word ON or OFF, or the symbol for on or off, will be visible. See *Passenger Airbag Status Indicator* ⇨ *130*.

The passenger sensing system turns off the front outboard passenger frontal airbag and knee airbag under certain conditions. No other airbag is affected by the passenger sensing system.

The passenger sensing system works with sensors that are part of the front outboard passenger seat and safety belt. The sensors are designed to detect the presence of a properly seated occupant and determine if the front outboard passenger frontal airbag and knee airbag should be allowed to inflate or not.

According to accident statistics, children are safer when properly secured in a rear seat in the correct child restraint for their weight and size.

Whenever possible, children aged 12 and under should be secured in a rear seating position.

Never put a rear-facing child seat in the front. This is because the risk to the rear-facing child is so great, if the airbag inflates.

⚠ Warning

A child in a rear-facing child restraint can be seriously injured or killed if the passenger frontal airbag inflates. This is because the back of the rear-facing child restraint would be very close to the inflating airbag. A child in a forward-facing child restraint can be seriously injured or killed if the passenger frontal airbag inflates and the passenger seat is in a forward position.

Even if the passenger sensing system has turned off the front outboard passenger airbag(s), no system is fail-safe. No one can guarantee that an airbag will not deploy under some unusual circumstance, even though the airbag(s) are off.

(Continued)

Warning (Continued)

Never put a rear-facing child restraint in the front seat, even if the airbag is off. If securing a forward-facing child restraint in the front outboard passenger seat, always move the seat as far back as it will go. It is better to secure child restraints in the rear seat. Consider using another vehicle to transport the child when a rear seat is not available.

The passenger sensing system is designed to turn off the front outboard passenger frontal airbag and knee airbag if:

- The front outboard passenger seat is unoccupied.
- The system determines that an infant is present in a child restraint.
- A front outboard passenger takes his/her weight off of the seat for a period of time.
- There is a critical problem with the airbag system or the passenger sensing system.

When the passenger sensing system has turned off the front outboard passenger frontal airbag and knee airbag, the off indicator will light and stay lit as a reminder that the airbags are off. See *Passenger Airbag Status Indicator* ⇨ *130*.

The passenger sensing system is designed to turn on the front outboard passenger frontal airbag and knee airbag anytime the system senses that a person of adult size is sitting properly in the front outboard passenger seat. When the passenger sensing system has allowed the airbag(s) to be enabled, the on indicator will light and stay lit as a reminder that the airbag(s) are active.

For some children, including children in child restraints, and for very small adults, the passenger sensing system may or may not turn off the front outboard passenger frontal airbag and knee airbag,

depending upon the person's seating posture and body build. Everyone in the vehicle who has outgrown child restraints should wear a safety belt properly — whether or not there is an airbag for that person.

⚠ Warning

If the airbag readiness light ever comes on and stays on, it means that something may be wrong with the airbag system. To help avoid injury to yourself or others, have the vehicle serviced right away. See *Airbag Readiness Light* ⇨ *130* for more information, including important safety information.

If the On Indicator Is Lit for a Child Restraint

The passenger sensing system is designed to turn off the front outboard passenger frontal airbag and knee airbag if the system determines that an infant is present in a child restraint. If a child restraint has been installed and the on indicator is lit:

1. Turn the vehicle off.
2. Remove the child restraint from the vehicle.
3. Remove any additional items from the seat such as blankets, cushions, seat covers, seat heaters, or seat massagers.
4. Reinstall the child restraint following the directions provided by the child restraint manufacturer and refer to *Securing Child Restraints (Front Passenger Seat)* ⇨ *103* or *Securing Child Restraints (Rear Seat)* ⇨ *101*.

   Make sure the safety belt retractor is locked by pulling the shoulder belt all the way out of the retractor when installing the child restraint, even if the child restraint is equipped with a safety belt lock-off. When the retractor lock is set, the belt can be tightened but not pulled out of the retractor.
5. If, after reinstalling the child restraint and restarting the vehicle, the on indicator is still lit, turn the vehicle off. Then slightly recline the vehicle seatback and adjust the seat cushion, if adjustable, to make sure that the vehicle seatback is not pushing the child restraint into the seat cushion.

   Also make sure the child restraint is not trapped under the vehicle head restraint. If this happens, adjust the head restraint. See *Head Restraints* ⇨ *58*.
6. Restart the vehicle.

The passenger sensing system may or may not turn off the airbags for a child in a child restraint depending upon the child's size. It is better to secure the child restraint in a rear seat. Never put a rear-facing child restraint in the front seat, even if the on indicator is not lit.

If the Off Indicator Is Lit for an Adult-Sized Occupant

If a person of adult size is sitting in the front outboard passenger seat, but the off indicator is lit, it could be because that person is not sitting properly in the seat or that the child restraint locking feature is engaged. Use the following steps to allow the system to detect that person and enable the front outboard passenger frontal airbag and knee airbag:

1. Turn the vehicle off.
2. Remove any additional material from the seat, such as blankets, cushions, seat covers, seat heaters, or seat massagers.
3. Place the seatback in the fully upright position.
4. Have the person sit upright in the seat, centered on the seat cushion, with legs comfortably extended.
5. If the shoulder portion of the belt is pulled out all the way, the child restraint locking feature will be engaged. This may unintentionally cause the passenger sensing system to turn the airbag off for some adult-sized occupants. If this happens, unbuckle the belt, let the belt go back all the way, and then buckle the belt again without pulling the belt out all the way.
6. Restart the vehicle and have the person remain in this position for two to three minutes after the on indicator is lit.

⚠ Warning

If the front outboard passenger airbag is turned off for an adult-sized occupant, the airbag will not be able to inflate and help protect that person in a crash, resulting in an increased risk of serious injury or even death. An adult-sized occupant should not ride in the front outboard passenger seat, if the passenger airbag off indicator is lit.

Additional Factors Affecting System Operation

Safety belts help keep the passenger in position on the seat during vehicle maneuvers and braking, which helps the passenger sensing system maintain the passenger airbag status. See “Safety Belts” and “Child Restraints” in the Index for additional information about the importance of proper restraint use.

A thick layer of additional material, such as a blanket or cushion, or aftermarket equipment such as seat covers, seat heaters, and seat massagers can affect how well the passenger sensing system operates. We recommend that you not use seat covers or other aftermarket equipment except when approved by GM for your specific vehicle. See *Adding Equipment to the Airbag-Equipped Vehicle* ⇨ *86* for more information about modifications that can affect how the system operates.

The on indicator may be lit if an object, such as a briefcase, handbag, grocery bag, laptop, or other electronic device is put on an unoccupied seat. If this is not desired remove the object from the seat.

⚠ Warning

Stowing of articles under the passenger seat or between the passenger seat cushion and

(Continued)

Warning (Continued)

seatback may interfere with the proper operation of the passenger sensing system.

Servicing the Airbag-Equipped Vehicle

Airbags affect how the vehicle should be serviced. There are parts of the airbag system in several places around the vehicle. Your dealer and the service manual have information about servicing the vehicle and the airbag system. To purchase a service manual, see *Service Publications Ordering Information* ⇨ *370*.

⚠ Warning

For up to 10 seconds after the vehicle is turned off and the battery is disconnected, an airbag can still inflate during improper service. You can be injured if you

(Continued)

Warning (Continued)

are close to an airbag when it inflates. Avoid yellow connectors. They are probably part of the airbag system. Be sure to follow proper service procedures, and make sure the person performing work for you is qualified to do so.

Adding Equipment to the Airbag-Equipped Vehicle

Adding accessories that change the vehicle's frame, bumper system, height, front end, or side sheet metal may keep the airbag system from working properly. The operation of the airbag system can also be affected by changing any parts of the front seats, safety belts, the airbag sensing and diagnostic module, steering wheel, instrument panel, any of the airbag modules, ceiling or pillar garnish trim, front sensors, side impact sensors, or airbag wiring.

Your dealer and the service manual have information about the location of the airbag sensors, sensing and diagnostic module, and airbag wiring.

In addition, the vehicle has a passenger sensing system for the front outboard passenger position, which includes sensors that are part of the passenger seat. The passenger sensing system may not operate properly if the original seat trim is replaced with non-GM covers, upholstery, or trim; or with GM covers, upholstery, or trim designed for a different vehicle. Any object, such as an aftermarket seat heater or a comfort-enhancing pad or device, installed under or on top of the seat fabric, could also interfere with the operation of the passenger sensing system. This could either prevent proper deployment of the passenger airbag(s) or prevent the passenger sensing system from properly turning off the passenger airbag(s). See *Passenger Sensing System* ⇨ *82*.

The vehicle has rollover roof-rail airbags. See *Different Size Tires and Wheels* ⇨ *316* for additional important information.

If you have to modify your vehicle because you have a disability and you have questions about whether the modifications will affect the vehicle's airbag system, or if you have questions about whether the airbag system will be affected if the vehicle is modified for any other reason, call Customer Assistance. See *Customer Assistance Offices* ⇨ *363*.

Airbag System Check

The airbag system does not need regularly scheduled maintenance or replacement. Make sure the airbag readiness light is working. See *Airbag Readiness Light* ⇨ *130*.

Caution

If an airbag covering is damaged, opened, or broken, the airbag may not work properly. Do not

(Continued)

Caution (Continued)

open or break the airbag coverings. If there are any opened or broken airbag coverings, have the airbag covering and/or airbag module replaced. For the location of the airbags, see *Where Are the Airbags?* ⇨ *78*. See your dealer for service.

Replacing Airbag System Parts after a Crash

⚠ Warning

A crash can damage the airbag systems in the vehicle.
A damaged airbag system may not work properly and may not protect you and your passenger(s) in a crash, resulting in serious injury or even death. To help make sure the airbag systems are working properly

(Continued)

Warning (Continued)

after a crash, have them inspected and any necessary replacements made as soon as possible.

If an airbag inflates, you will need to replace airbag system parts. See your dealer for service.

If the airbag readiness light stays on after the vehicle is started or comes on when you are driving, the airbag system may not work properly. Have the vehicle serviced right away. See *Airbag Readiness Light* ⇨ *130*.

Child Restraints

Older Children

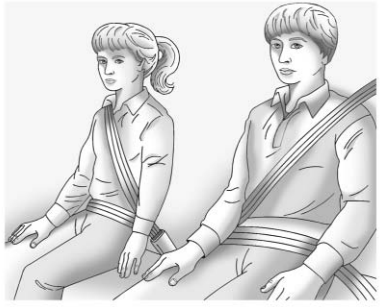

Older children who have outgrown booster seats should wear the vehicle safety belts.

The manufacturer instructions that come with the booster seat state the weight and height limitations for that booster. Use a booster seat with a lap-shoulder belt until the child passes the fit test below:

- Sit all the way back on the seat. Do the knees bend at the seat edge? If yes, continue. If no, return to the booster seat.
- Buckle the lap-shoulder belt. Does the shoulder belt rest on the shoulder? If yes, continue. If no, try using the rear safety belt comfort guide, if equipped. See “Rear Safety Belt Comfort Guides” under *Lap-Shoulder Belt* ⇨ *72*. If a comfort guide is not available, or if the shoulder belt still does not rest on the shoulder, then return to the booster seat.
- Does the lap belt fit low and snug on the hips, touching the thighs? If yes, continue. If no, return to the booster seat.

- Can proper safety belt fit be maintained for the length of the trip? If yes, continue. If no, return to the booster seat.

Q: What is the proper way to wear safety belts?

A: An older child should wear a lap-shoulder belt and get the additional restraint a shoulder belt can provide. The shoulder belt should not cross the face or neck. The lap belt should fit snugly below the hips, just touching the top of the thighs. This applies belt force to the child's pelvic bones in a crash. It should never be worn over the abdomen, which could cause severe or even fatal internal injuries in a crash.

Also see “Rear Safety Belt Comfort Guides” under *Lap-Shoulder Belt* ⇨ *72*.

According to accident statistics, children are safer when properly restrained in a rear seating position. In a crash, children who are not buckled up can strike other people who are buckled up, or can be thrown out of the vehicle. Older children need to use safety belts properly.

⚠ Warning

Never allow more than one child to wear the same safety belt. The safety belt cannot properly spread the impact forces. In a crash, they can be crushed together and seriously injured. A safety belt must be used by only one person at a time.

⚠ Warning

Never allow a child to wear the safety belt with the shoulder belt behind their back. A child can be seriously injured by not wearing the lap-shoulder belt properly. In a crash, the child would not be restrained by the shoulder belt. The child could move too far forward increasing the chance of head and neck injury. The child might also slide under the lap belt. The belt force would then be applied right on the abdomen.

(Continued)

Warning (Continued)

That could cause serious or fatal injuries. The shoulder belt should go over the shoulder and across the chest.

Infants and Young Children

Everyone in a vehicle needs protection! This includes infants and all other children. Neither the distance traveled nor the age and size of the traveler changes the need, for everyone, to use safety restraints. In fact, the law in every state in the United States and in every Canadian province says children up to some age must be restrained while in a vehicle.

⚠ Warning

Children can be seriously injured or strangled if a shoulder belt is wrapped around their neck. The shoulder belt can tighten but cannot be loosened if it is locked. The shoulder belt locks when it is pulled all the way out of the retractor. It unlocks when the shoulder belt is allowed to go all the way back into the retractor, but it cannot do this if it is wrapped around a child’s neck. If the shoulder belt is locked and tightened around a child’s neck, the only way to loosen the belt is to cut it.

Never leave children unattended in a vehicle and never allow children to play with the safety belts.

Every time infants and young children ride in vehicles, they should have the protection provided by appropriate child restraints. Neither the vehicle's safety belt system nor its airbag system is designed for them.

Children who are not restrained properly can strike other people, or can be thrown out of the vehicle.

⚠ Warning

Never hold an infant or a child while riding in a vehicle. Due to crash forces, an infant or a child will become so heavy it is not possible to hold it during a crash. For example, in a crash at only 40 km/h (25 mph), a 5.5 kg (12 lb) infant will suddenly become a 110 kg (240 lb) force on a person's arms. An infant should be secured in an appropriate restraint.

⚠ Warning

Children who are up against, or very close to, any airbag when it inflates can be seriously injured or killed. Never put a rear-facing child restraint in the front outboard seat. Secure a rear-facing child restraint in a rear seat. It is also better to secure a forward-facing child restraint in a rear seat. If you must secure a forward-facing child restraint in the front outboard seat, always move the front passenger seat as far back as it will go.

Q: What are the different types of add-on child restraints?

A: Add-on child restraints, which are purchased by the vehicle owner, are available in four basic types. Selection of a particular restraint should take into consideration not only the child's weight, height, and age but also whether or not the restraint will be compatible with the motor vehicle in which it will be used.

For most basic types of child restraints, there are many different models available. When purchasing a child restraint, be sure it is designed to be used in a motor vehicle. If it is, the restraint will have a label saying that it meets federal motor vehicle safety standards.

The restraint manufacturer instructions that come with the restraint state the weight and height limitations for a particular child restraint. In addition, there are many kinds of restraints available for children with special needs.

⚠ Warning

To reduce the risk of neck and head injury in a crash, infants and toddlers should be secured in a rear-facing child restraint until age two, or until they reach the maximum height and weight limits of their child restraint.

⚠ Warning

A young child's hip bones are still so small that the vehicle's regular safety belt may not remain low on the hip bones, as it should. Instead, it may settle up around the child's abdomen. In a crash, the belt would apply force on a body area that is unprotected by any bony structure. This alone could cause serious or fatal injuries. To reduce the risk of serious or fatal injuries during a crash, young children should always be secured in appropriate child restraints.

Child Restraint Systems

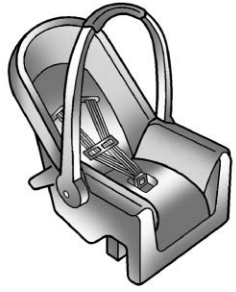

Rear-Facing Infant Seat

A rear-facing infant seat provides restraint with the seating surface against the back of the infant.

The harness system holds the infant in place and, in a crash, acts to keep the infant positioned in the restraint.

Forward-Facing Child Seat

A forward-facing child seat provides restraint for the child's body with the harness.

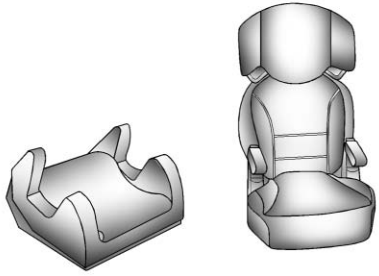

Booster Seats

A booster seat is a child restraint designed to improve the fit of the vehicle's safety belt system.
A booster seat can also help a child to see out the window.

Securing an Add-On Child Restraint in the Vehicle

⚠ Warning

A child can be seriously injured or killed in a crash if the child restraint is not properly secured in the vehicle. Secure the child

(Continued)

Warning (Continued)

restraint properly in the vehicle using the vehicle safety belt or LATCH system, following the instructions that came with that child restraint and the instructions in this manual.

To help reduce the chance of injury, the child restraint must be secured in the vehicle. Child restraint systems must be secured in vehicle seats by lap belts or the lap belt portion of a lap-shoulder belt, or by the LATCH system. See *Lower Anchors and Tethers for Children (LATCH System)* ⇨ *95*. Children can be endangered in a crash if the child restraint is not properly secured in the vehicle.

When securing an add-on child restraint, refer to the instructions that come with the restraint which may be on the restraint itself or in a booklet, or both, and to this manual. The child restraint instructions are important, so if they are not available, obtain a replacement copy from the manufacturer.

Keep in mind that an unsecured child restraint can move around in a collision or sudden stop and injure people in the vehicle. Be sure to properly secure any child restraint in the vehicle — even when no child is in it.

In some areas of the United States and Canada, Certified Child Passenger Safety Technicians (CPSTs) are available to inspect and demonstrate how to correctly use and install child restraints. In the U.S., refer to the National Highway Traffic Safety Administration (NHTSA) website to locate the nearest child safety seat inspection station. For CPST availability in Canada, check with Transport Canada or the Provincial Ministry of Transportation office.

Securing the Child Within the Child Restraint

⚠ Warning

A child can be seriously injured or killed in a crash if the child is not properly secured in the child restraint. Secure the child properly following the instructions that came with that child restraint.

Where to Put the Restraint

According to accident statistics, children and infants are safer when properly restrained in a child restraint system or infant restraint system secured in a rear seating position.

Whenever possible, children aged 12 and under should be secured in a rear seating position.

Never put a rear-facing child seat in the front. This is because the risk to the rear-facing child is so great if the airbag deploys.

⚠ Warning

A child in a rear-facing child restraint can be seriously injured or killed if the front passenger airbag inflates. This is because the back of the rear-facing child restraint would be very close to the inflating airbag. A child in a forward-facing child restraint can be seriously injured or killed if the front passenger airbag inflates and the passenger seat is in a forward position.

Even if the passenger sensing system has turned off the front passenger frontal airbag, no system is fail-safe. No one can guarantee that an airbag will not deploy under some unusual circumstance, even though it is turned off.

Secure rear-facing child restraints in a rear seat, even if the airbag is off. If you secure a forward-facing child restraint in

(Continued)

Warning (Continued)

the front seat, always move the front passenger seat as far back as it will go. It is better to secure the child restraint in a rear seat.

See *Passenger Sensing System* ➪ *82* for additional information.

When securing a child restraint in a rear seating position, study the instructions that came with the child restraint to make sure it is compatible with this vehicle.

Child restraints and booster seats vary considerably in size, and some may fit in certain seating positions better than others.

Depending on where you place the child restraint and the size of the child restraint, you may not be able to access adjacent safety belt assemblies or LATCH anchors for additional passengers or child restraints. Adjacent seating positions should not be used if the

child restraint prevents access to or interferes with the routing of the safety belt.

Wherever a child restraint is installed, be sure to secure the child restraint properly.

Keep in mind that an unsecured child restraint can move around in a collision or sudden stop and injure people in the vehicle. Be sure to properly secure any child restraint in the vehicle — even when no child is in it.

Lower Anchors and Tethers for Children (LATCH System)

The LATCH system secures a child restraint during driving or in a crash. LATCH attachments on the child restraint are used to attach the child restraint to the anchors in the vehicle. The LATCH system is designed to make installation of a child restraint easier.

In order to use the LATCH system in your vehicle, you need a child restraint that has LATCH attachments. LATCH-compatible rear-facing and forward-facing child seats can be properly installed using either the LATCH anchors or the vehicle's safety belts. Do not use both the safety belts and the LATCH anchorage system to secure a rear-facing or forward-facing child seat.

Booster seats use the vehicle's safety belts to secure the child in the booster seat. If the manufacturer recommends that the booster seat be secured with the LATCH system, this can be done as long as the booster seat can be positioned properly and there is no interference with the proper positioning of the lap-shoulder belt on the child.

Make sure to follow the instructions that came with the child restraint, and also the instructions in this manual.

When installing a child restraint with a top tether, you must also use either the lower anchors or the safety belts to properly secure the child restraint. A child restraint must never be attached using only the top tether.

The LATCH anchorage system can be used until the combined weight of the child plus the child restraint is 29.5 kg (65 lbs). Use the safety belt alone instead of the LATCH anchorage system once the combined weight is more than 29.5 kg (65 lbs).

The following explains how to attach a child restraint with these attachments in the vehicle.

Not all vehicle seating positions or child restraints have lower anchors and attachments or top tether anchors and attachments. In this case, the safety belt must be used (with top tether where available) to secure the child restraint. See *Securing Child Restraints (Front Passenger Seat)* ⇨ *103* or *Securing Child Restraints (Rear Seat)* ⇨ *101*.

Lower Anchors

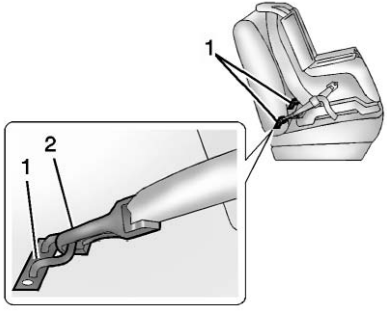

Lower anchors (1) are metal bars built into the vehicle. There are two lower anchors for each LATCH seating position that will accommodate a child restraint with lower attachments (2).

Top Tether Anchor

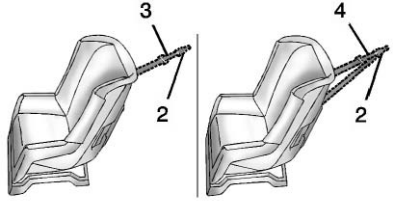

A top tether (3, 4) anchors the top of the child restraint to the vehicle. A top tether anchor is built into the vehicle. The top tether attachment (2) on the child restraint connects to the top tether anchor in the vehicle in order to reduce the forward movement and rotation of the child restraint during driving or in a crash.

The child restraint may have a single tether (3) or a dual tether (4). Either will have a single attachment (2) to secure the top tether to the anchor.

Some child restraints with top tethers are designed for use with or without the top tether being attached. Others require the top tether always to be attached. In Canada, the law requires that forward-facing child restraints have a top tether, and that the tether be attached. Be sure to read and follow the instructions for your child restraint.

Lower Anchor and Top Tether Anchor Locations

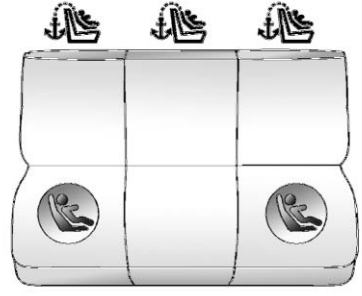

Rear Seat

: Seating positions with top tether anchors.

: Seating positions with two lower anchors.

To assist in locating the lower anchors, each seating position with lower anchors has two labels, near the crease between the seatback and the seat cushion.

To assist in locating the top tether anchors, the top tether anchor symbol is on the cover.

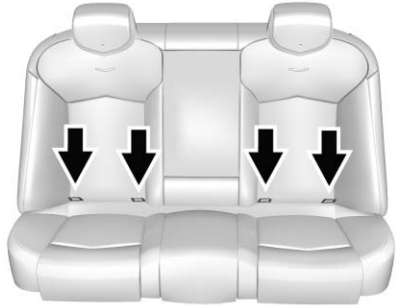

The outboard lower anchors are behind the vertical openings in the seat trim.

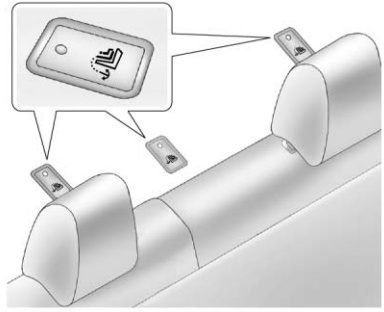

The top tether anchors are behind the rear seat, on the filler panel. Open the covers to access the anchors. Be sure to use an anchor on the same side of the vehicle as the seating position where the child restraint will be placed.

Do not secure a child restraint in a position without a top tether anchor if a national or local law requires that the top tether be attached, or if the instructions that come with the child restraint say that the top tether must be attached.

According to accident statistics, children and infants are safer when properly restrained in a child restraint system or infant restraint system secured in a rear seating position. See *Where to Put the Restraint* ⇨ *94* for additional information.

Securing a Child Restraint Designed for the LATCH System

⚠ Warning

If a LATCH-type child restraint is not attached to anchors, the child restraint will not be able to protect the child correctly. In a crash, the child could be seriously injured or killed. Install a LATCH-type child restraint properly using the anchors, or use the vehicle's safety belts to secure the restraint, following the instructions that came with the child restraint and the instructions in this manual.

⚠ Warning

To reduce the risk of serious or fatal injuries during a crash, do not attach more than one child restraint to a single anchor. Attaching more than one child

(Continued)

Warning (Continued)

restraint to a single anchor could cause the anchor or attachment to come loose or even break during a crash. A child or others could be injured.

⚠ Warning

Children can be seriously injured or strangled if a shoulder belt is wrapped around their neck. The shoulder belt can tighten but cannot be loosened if it is locked. The shoulder belt locks when it is pulled all the way out of the retractor. It unlocks when the shoulder belt is allowed to go all the way back into the retractor, but it cannot do this if it is wrapped around a child's neck. If the shoulder belt is locked and tightened around a child's neck, the only way to loosen the belt is to cut it.

(Continued)

Warning (Continued)

Buckle any unused safety belts behind the child restraint so children cannot reach them. Pull the shoulder belt all the way out of the retractor to set the lock, and tighten the belt behind the child restraint after the child restraint has been installed.

⚠ Warning

The power seats will work with the ignition off. Children could operate the power seats and be injured. Never leave children alone in the vehicle.

Caution

Do not adjust the power seat when a child restraint is installed. Adjusting the seat may cause damage to the installed child

(Continued)

Caution (Continued)

restraint. Use the window lockout button on the driver door to prevent adjustment of the seat whenever a child restraint is installed.

Caution

Do not let the LATCH attachments rub against the vehicle's safety belts. This may damage these parts. If necessary, move buckled safety belts to avoid rubbing the LATCH attachments.

If you need to secure more than one child restraint in the rear seat, see *Where to Put the Restraint* ⇨ *94*.

This system is designed to make the installation of child restraints easier. When using lower anchors, do not use the vehicle's safety belts. Instead, use the vehicle's anchors and child restraint attachments to secure the restraints. Some restraints also use another vehicle anchor to secure a top tether.

1. Attach and tighten the lower attachments to the lower anchors. If the child restraint does not have lower attachments or the desired seating position does not have lower anchors, secure the child restraint with the top tether and the safety belts. Move the head restraint up if needed to get a tight installation. Refer to your child restraint manufacturer instructions and the instructions in this manual.
   1.1. Find the lower anchors for the desired seating position.
   1.2. Put the child restraint on the seat.
   1.3. Attach and tighten the lower attachments on the child restraint to the lower anchors.
2. If the child restraint manufacturer recommends that the top tether be attached, attach and tighten the top tether to the top tether anchor, if equipped. Refer to the child restraint instructions and the following steps:
   2.1. Find the top tether anchor.
   2.2. Open the top tether anchor cover to expose the anchor.
   2.3. Route, attach, and tighten the top tether according to your child restraint instructions and the following instructions:

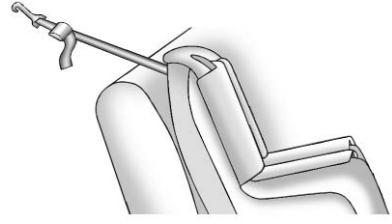

If the position you are using does not have a headrest or head restraint and you are using a single tether, route the tether over the seatback.

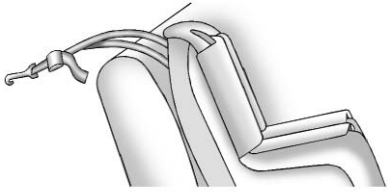

If the position you are using does not have a headrest or head restraint and you are using a dual tether, route the tether over the seatback.

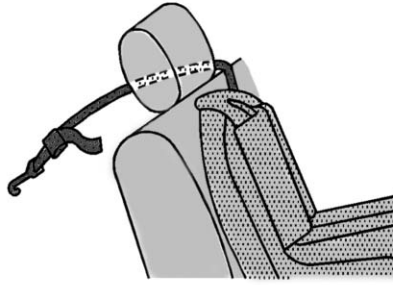

If the position you are using has an adjustable head restraint and you are using a single tether, route the tether around the inboard side of the head restraint.

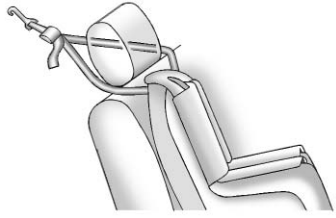

If the position you are using has an adjustable headrest or head restraint and you are using a dual tether, fully raise the head restraint and route the tethers around the out board side of the Head Restraint posts.

3. Before placing a child in the child restraint, make sure it is securely held in place. To check, grasp the child restraint at the LATCH path and attempt to move it side to side and back and forth. There should be no more than 2.5 cm (1 in) of movement for proper installation.

Replacing LATCH System Parts After a Crash

⚠ Warning

A crash can damage the LATCH system in the vehicle. A damaged LATCH system may not properly

(Continued)

Warning (Continued)

secure the child restraint, resulting in serious injury or even death in a crash. To help make sure the LATCH system is working properly after a crash, see your dealer to have the system inspected and any necessary replacements made as soon as possible.

If the vehicle has the LATCH system and it was being used during a crash, new LATCH system parts may be needed.

New parts and repairs may be necessary even if the LATCH system was not being used at the time of the crash.

Securing Child Restraints (Rear Seat)

When securing a child restraint in a rear seating position, study the instructions that came with the child restraint to make sure it is compatible with this vehicle.

If the child restraint has the LATCH system, see *Lower Anchors and Tethers for Children (LATCH System)* ⇨ *95* for how and where to install the child restraint using LATCH. If a child restraint is secured in the vehicle using a safety belt and it uses a top tether, see *Lower Anchors and Tethers for Children (LATCH System)* ⇨ *95* for top tether anchor locations.

Do not secure a child seat in a position without a top tether anchor if a national or local law requires that the top tether be anchored, or if the instructions that come with the child restraint say that the top strap must be anchored.

In Canada, the law requires that forward-facing child restraints have a top tether, and that the tether be attached.

If the child restraint or vehicle seat position does not have the LATCH system, you will be using the safety belt to secure the child restraint in this position. Be sure to follow the instructions that came with the child restraint. Secure the child in the child restraint when and as the instructions say.

If more than one child restraint needs to be installed in the rear seat, be sure to read *Where to Put the Restraint* ⇨ *94*.

1. Put the child restraint on the seat.
2. Pick up the latch plate, and run the lap and shoulder portions of the vehicle's safety belt through or around the restraint. The child restraint instructions will show you how.

3. Push the latch plate into the buckle until it clicks.

   Position the release button on the buckle so that the safety belt could be quickly unbuckled if necessary.

4. Pull the shoulder belt all the way out of the retractor to set the lock. When the retractor lock is set, the belt can be tightened but not pulled out of the retractor.

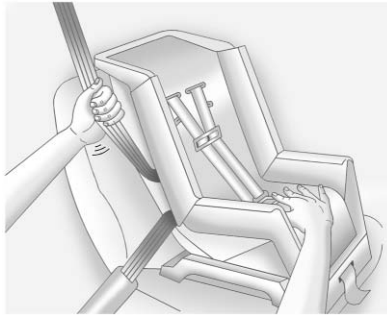

5. To tighten the belt, push down on the child restraint, pull the shoulder portion of the belt to tighten the lap portion of the belt, and feed the shoulder belt back into the retractor. When installing a forward-facing child restraint, it may be helpful to use your knee to push down on the child restraint as you tighten the belt.

   Try to pull the belt out of the retractor to make sure the retractor is locked. If the retractor is not locked, repeat Steps 4 and 5.

6. If the child restraint has a top tether, follow the child restraint manufacturer's instructions regarding the use of the top tether. See *Lower Anchors and Tethers for Children (LATCH System)* ⇨ *95*.

7. Before placing a child in the child restraint, make sure it is securely held in place. To check, grasp the child restraint at the safety belt path and attempt to move it side to side and back and forth. When the child restraint is properly installed, there should be no more than 2.5 cm (1 in) of movement.

To remove the child restraint, unbuckle the vehicle safety belt and let it return to the stowed position. If the top tether is attached to a top tether anchor, disconnect it.

Securing Child Restraints (Front Passenger Seat)

This vehicle has airbags. A rear seat is a safer place to secure a forward-facing child restraint. See *Where to Put the Restraint* ⇨ *94*.

In addition, the vehicle has a passenger sensing system which is designed to turn off the front outboard passenger frontal airbag and knee airbag under certain conditions. See *Passenger Sensing System* ⇨ *82* and *Passenger Airbag Status Indicator* ⇨ *130* for more information, including important safety information.

Never put a rear-facing child seat in the front. This is because the risk to the rear-facing child is so great if the airbag deploys.

⚠ Warning

A child in a rear-facing child restraint can be seriously injured or killed if the front outboard passenger frontal airbag inflates.

(Continued)

Warning (Continued)

This is because the back of the rear-facing child restraint would be very close to the inflating airbag. A child in a forward-facing child restraint can be seriously injured or killed if the front outboard passenger frontal airbag inflates and the passenger seat is in a forward position.

Even if the passenger sensing system has turned off the front outboard passenger airbag(s), no system is fail-safe. No one can guarantee that an airbag will not inflate under some unusual circumstance, even though the airbag(s) are off.

Secure rear-facing child restraints in a rear seat, even if the airbag(s) are off. If you secure a forward-facing child restraint in the front outboard passenger seat, always move the seat as far

(Continued)

Warning (Continued)

back as it will go. It is better to secure the child restraint in a rear seat.

See *Passenger Sensing System* ⇨ *82* for additional information.

If the child restraint uses a top tether, see *Lower Anchors and Tethers for Children (LATCH System)* ⇨ *95* for top tether anchor locations.

Do not secure a child seat in a position without a top tether anchor if a national or local law requires that the top tether be anchored, or if the instructions that come with the child restraint say that the top strap must be anchored.

In Canada, the law requires that forward-facing child restraints have a top tether, and that the tether be attached.

When using the lap-shoulder belt to secure the child restraint in this position, follow the instructions that came with the child restraint and the following instructions:

1. Move the seat as far back as it will go before securing the forward-facing child restraint.

   When the passenger sensing system has turned off the front outboard passenger frontal airbag and knee airbag, the off indicator on the passenger airbag status indicator should light and stay lit when the vehicle is started. See *Passenger Airbag Status Indicator* ⇨ *130*.

2. Put the child restraint on the seat.

3. Pick up the latch plate, and run the lap and shoulder portions of the vehicle's safety belt through or around the restraint. The child restraint instructions will show you how.

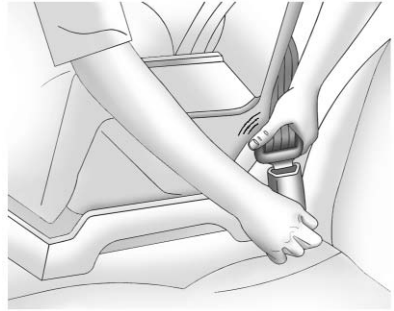

4. Push the latch plate into the buckle until it clicks.

   Position the release button on the buckle so that the safety belt could be quickly unbuckled if necessary.

5. Pull the shoulder belt all the way out of the retractor to set the lock. When the retractor lock is set, the belt can be tightened but not pulled out of the retractor.

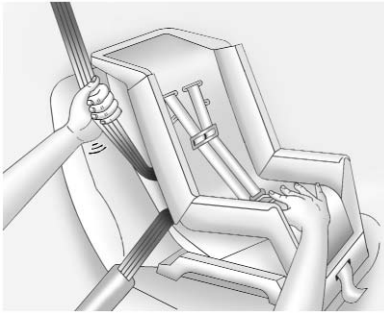

6. To tighten the belt, push down on the child restraint, pull the shoulder portion of the belt to tighten the lap portion of the belt, and feed the shoulder belt back into the retractor. When installing a forward-facing child restraint, it may be helpful to use your knee to push down on the child restraint as you tighten the belt.

   Try to pull the belt out of the retractor to make sure the retractor is locked. If the retractor is not locked, repeat Steps 5 and 6.

7. Before placing a child in the child restraint, make sure it is securely held in place. To check, grasp the child restraint at the safety belt path and attempt to move it side to side and back and forth. When the child restraint is properly installed, there should be no more than 2.5 cm (1 in) of movement.

If the airbags are off, the off indicator in the passenger airbag status indicator will come on and stay on when the vehicle is started.

If a child restraint has been installed and the on indicator is lit, see “If the On Indicator Is Lit for a Child Restraint” under *Passenger Sensing System* ⇨ *82*.

To remove the child restraint, unbuckle the vehicle safety belt and let it return to the stowed position.

Storage

Storage Compartments
Storage Compartments 106
Instrument Panel Storage 106
Glove Box 106
Armrest Storage 107
Rear Storage 107
Center Console Storage 107

Additional Storage Features
Cargo Tie-Downs 108
Convenience Net 108

Storage Compartments

⚠ Warning

Do not store heavy or sharp objects in storage compartments. In a crash, these objects may cause the cover to open and could result in injury.

Instrument Panel Storage

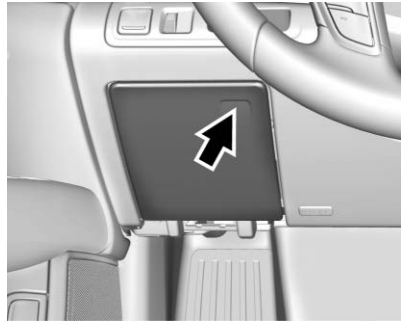

Press to release the cover.

Glove Box

To open, touch the GLOVE BOX button. Close the glove box manually.

Armrest Storage

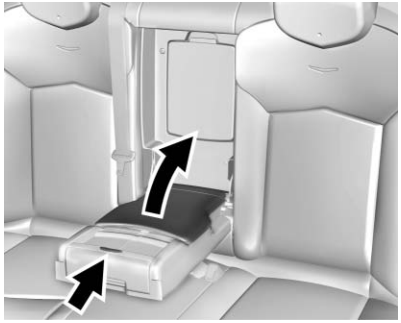

Press the latch to access the storage area in the rear armrest. Press the button to extend the cupholders.

Push the cupholders in to close.

If equipped, there are seat controls on the armrest. See *Rear Seats* ⇨ *66*.

Rear Storage

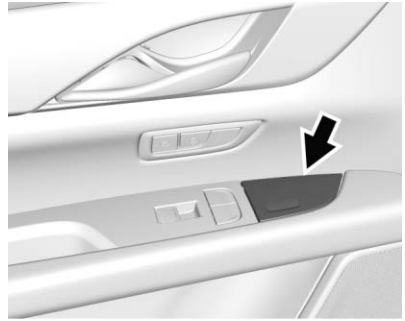

If equipped, press the lid to access the storage compartment in the rear doors.

Center Console Storage

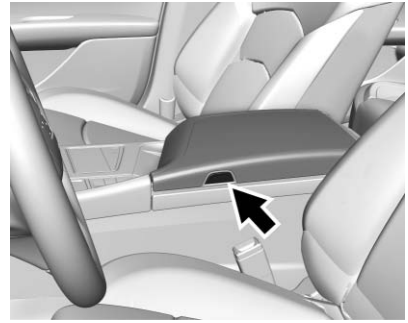

Press the button and lift to access the storage area. There is an auxiliary jack and USB port(s) inside. See the infotainment manual.

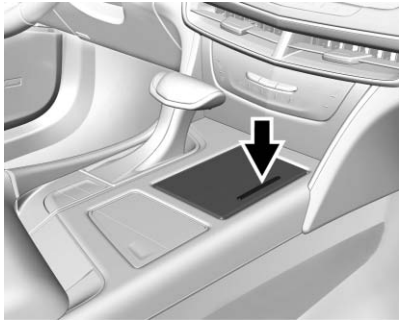

There are cupholders in the center console. Push and release on the passenger side of the cover to access the cupholders.

Additional Storage Features

Cargo Tie-Downs

The cargo tie-downs can be used to secure small loads and the convenience net. See *Convenience Net* ⇨ *108*, if equipped.

Convenience Net

The vehicle may have a convenience net in the trunk. The net is attached to the cargo tie-downs. Put small loads behind the net. It can also be positioned into an envelope to hold smaller items inside. Do not use the net for heavy loads.

Instruments and Controls

Controls

Steering Wheel Adjustment . . . 110
Steering Wheel Controls 111
Heated Steering Wheel 111
Horn 111
Windshield Wiper/Washer 111
Compass 113
Clock 113
Power Outlets 114
Wireless Charging 115

Warning Lights, Gauges, and Indicators

Warning Lights, Gauges, and Indicators 117
Instrument Cluster (Base Level) 118
Instrument Cluster (Uplevel) 121
Speedometer 123
Odometer 124
Trip Odometer 124
Tachometer 124
Fuel Gauge 124
Boost Gauge (Performance Configuration Only) 125
Engine Oil Pressure Gauge (Base Level Cluster Only) . . . 126
Engine Oil Temperature Gauge (Performance Configuration Only) 127
Engine Coolant Temperature Gauge 128
Voltmeter Gauge (Base Level Cluster Only) 129
Safety Belt Reminders 129
Airbag Readiness Light 130
Passenger Airbag Status Indicator 130
Charging System Light 131
Malfunction Indicator Lamp (Check Engine Light) 132
Brake System Warning Light 133
Electric Parking Brake Light 134
Service Electric Parking Brake Light 134
Antilock Brake System (ABS) Warning Light 135
Lane Keep Assist (LKA) Light 135
Vehicle Ahead Indicator 136
Pedestrian Ahead Indicator . . . 136
Traction Off Light 136
StabiliTrak® OFF Light 136
Traction Control System (TCS)/ StabiliTrak® Light 137
Engine Coolant Temperature Warning Light 137
Tire Pressure Light 137
Engine Oil Pressure Light 138
Low Fuel Warning Light 138
Auto Stop Mode (Uplevel Cluster) 139
Security Light 139
High-Beam On Light 139
Lamps On Reminder 139
Cruise Control Light 140
Door Ajar Light 140

Information Displays

Driver Information Center (DIC) 140
Head-Up Display (HUD) 143

Vehicle Messages

Vehicle Messages 146
Battery Voltage and Charging Messages 147
Brake System Messages 147
Compass Messages 148
Cruise Control Messages 148
Door Ajar Messages 148
Engine Cooling System Messages 149
Engine Oil Messages 149

Engine Power Messages 150
Fuel System Messages 150
Key and Lock Messages 150
Lamp Messages 151
Object Detection System Messages 151
Ride Control System Messages 154
Airbag System Messages 154
Safety Belt Messages 154
Security Messages 155
Service Vehicle Messages 155
Steering System Messages 155
Starting the Vehicle Messages 156
Tire Messages 156
Transmission Messages 156
Vehicle Reminder Messages 157
Vehicle Speed Messages 157
Washer Fluid Messages 157
Window Messages 157

Vehicle Personalization
Vehicle Personalization 157

Universal Remote System
Universal Remote System 166
Universal Remote System Programming 166
Universal Remote System Operation 168

Controls

Steering Wheel Adjustment

Power Tilt and Telescoping Steering Wheel

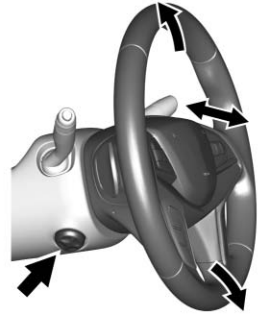

Press the control to move the tilt and telescoping steering wheel up and down or forward and rearward.

Do not adjust the steering wheel while driving.

Steering Wheel Controls

The infotainment system can be operated by using the steering wheel controls. See "Steering Wheel Controls" in the infotainment manual.

Heated Steering Wheel

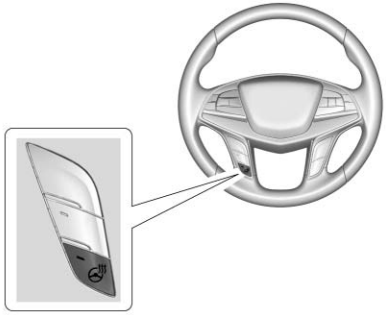

: If equipped with a heated steering wheel, press to turn on or off. An indicator next to the button is lit when the feature is turned on.

The steering wheel takes about three minutes to start heating.

Horn

Press on the steering wheel pad to sound the horn.

Windshield Wiper/Washer

With the ignition in ACC/ ACCESSORY or ON/RUN, move the windshield wiper lever to select the wiper speed.

HI : Use for fast wipes.

LO : Use for slow wipes.

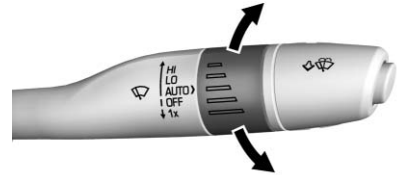

AUTO : Use this setting for intermittent wipes or Rainsense™, when enabled. For intermittent wipes, move the lever up to AUTO, then turn the band on the wiper lever up for more frequent wipes or down for less frequent wipes.
If Rainsense is enabled, see “Rainsense™” later in this section.

If the windshield wipers are in use while driving, the exterior lamps come on automatically if the exterior lamp control is in AUTO. The transition time for the lamps coming on varies based on wiper speed. See “Lights On with Wipers” under *Automatic Headlamp System* ⇨ *172*.

OFF : Use to turn the wipers off.

1X : For a single wipe, briefly move the wiper lever down. For several wipes, hold the wiper lever down.

Clear snow and ice from the wiper blades and windshield before using them. If frozen to the windshield, carefully loosen or thaw them. Damaged blades should be replaced. See *Wiper Blade Replacement* ⇨ *286*.

Heavy snow or ice can overload the wiper motor.

Wiper Parking

If the ignition is put in OFF while the wipers are on LO, HI, or AUTO, they will immediately stop.

If the windshield wiper lever is then moved to OFF before the driver door is opened or within 10 minutes, the wipers will restart and move to the base of the windshield.

If the ignition is put in OFF while the wipers are performing wipes due to windshield washing, the wipers continue to run until they reach the base of the windshield.

Rainsense™

With Rainsense, a sensor near the top center of the windshield detects the amount of water on the windshield and controls the sensitivity of the windshield wiper.

Keep this area of the windshield clear of debris to allow for best system performance.

AUTO : If Rainsense is enabled, move the windshield wiper lever to AUTO. Turn the band on the wiper lever to adjust the sensitivity.

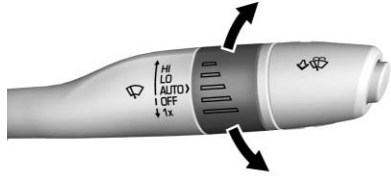

- Turn the band up for more sensitivity to moisture.
- Turn the band down for less sensitivity to moisture.
- Move the windshield wiper lever out of the AUTO position to deactivate Rainsense.

To enable or disable this feature, see “Rainsense Wipers” under *Vehicle Personalization* ⇨ *157*.

Wiper Arm Assembly Protection

When using an automatic car wash, move the windshield wiper lever to OFF. This disables the automatic Rainsense windshield wipers.

With Rainsense, if the transmission is in N (Neutral) and the vehicle speed is very slow, the wipers will automatically stop at the base of the windshield.

The wiper operations return to normal when the transmission is no longer in N (Neutral) or the vehicle speed has increased.

: Pull the windshield wiper lever toward you to spray windshield washer fluid and activate the wipers. The wipers will continue until the lever is released or the maximum wash time is reached. When the windshield wiper lever is released, additional wipes may occur

depending on how long the windshield washer had been activated. See *Washer Fluid* ⇨ *281* for information on filling the windshield washer fluid reservoir.

⚠ Warning

In freezing weather, do not use the washer until the windshield is warmed. Otherwise the washer fluid can form ice on the windshield, blocking your vision.

Compass

The vehicle may have a compass display on the Driver Information Center (DIC). The compass receives its heading and other information from the Global Positioning System (GPS) antenna, StabiliTrak®, and vehicle speed information.

The compass system is designed to operate for a certain number of miles or degrees of turn before needing a signal from the GPS satellites. When the compass display shows CAL, drive the vehicle for a short distance in an open area where it can receive a GPS signal. The compass system will automatically determine when a GPS signal is restored and provide a heading again. See *Compass Messages* ⇨ *148* for the messages that may be displayed for the compass.

Clock

The infotainment system controls are used to access the time and date settings through the menu system. See “Home Page” in the infotainment manual for information about how to use the menu system.

Setting the Clock

Time

To set the time:

1. From the Home Page, touch the SETTINGS screen button, then touch Time and Date.
2. Touch Set Time, then touch + or − to increase or decrease hours or minutes, and change AM or PM.
3. Touch 12-24 Hr for a 12 or 24 hour clock.
4. Touch ↩ to go back to the previous menu.

Date

To set the date:

1. Touch the SETTINGS screen button, then touch Time and Date.
2. Touch Set Date, then touch + or − to increase or decrease month, day, or year.
3. Touch ↩ to go back to the previous menu.

Auto Set

When on, the time and date will automatically update.

To set auto set:

1. Touch the SETTINGS screen button, then touch Time and Date.
2. Touch Set Time or Set Date.

3. Touch Auto Set, then select On-Cell Network or Off-Manual to manually set the time and date.
4. Touch ⮌ to go back to the previous menu.

If auto set is on, the time displayed on the clock may not update immediately when driving into a new time zone.

Clock Display

When on, the digital clock will display on the infotainment screen.

To set the clock display:

1. Touch the SETTINGS screen button, then touch Time and Date.
2. Touch Clock Display, then select Off or On.
3. Touch ⮌ to go back to the previous menu.

Power Outlets

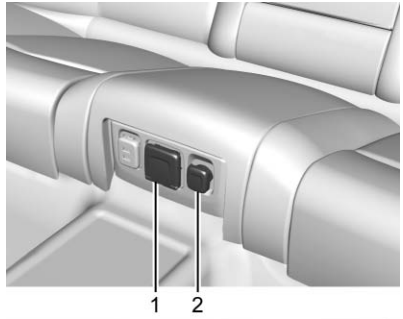

1. Power Outlet 110V/120V Alternating Current
2. Power Outlet 12 Volt Direct Current

Power Outlet 12 Volt Direct Current

The 12-volt accessory power outlet can be used to plug in electrical equipment, such as a cell phone or MP3 player.

The vehicle has an accessory power outlet on the rear seat trim panel.

Lift the cover to access the accessory power outlet.

Certain accessory power plugs may not be compatible with the accessory power outlet and could overload vehicle or adapter fuses. If a problem is experienced, see your dealer.

When adding electrical equipment, be sure to follow the proper installation instructions included with the equipment. See *Add-On Electrical Equipment* ⇨ *260*.

Caution
Hanging heavy equipment from the power outlet can cause damage not covered by the vehicle warranty. The power outlets are designed for accessory power plugs only, such as cell phone charge cords.

Always unplug electrical equipment when not in use and do not plug in equipment that exceeds the maximum 20 amp rating.

Power Outlet 110V/120V Alternating Current

If equipped with this power outlet on the rear seat trim panel, it can be used to plug in electrical equipment that uses a maximum limit of 400 watts.

An indicator light on the outlet turns on to show it is in use. The light comes on when the ignition is in ON/RUN, equipment requiring less than 400 watts is plugged into the outlet, and no system fault is detected.

The indicator light does not come on when the ignition is in LOCK/OFF or if the equipment is not fully seated into the outlet.

If equipment is connected using more than 400 watts or a system fault is detected, a protection circuit shuts off the power supply and the indicator light turns off. To reset the circuit, unplug the item and plug it back in or turn the Retained Accessory Power (RAP) off and then back on. See *Retained Accessory Power (RAP)* ⇨ *206*. The power restarts when equipment using 400 watts or less is plugged into the outlet and a system fault is not detected.

The power outlet is not designed for the following and may not work properly if this equipment is plugged in:

- Equipment with high initial peak wattage, such as compressor-driven refrigerators or electric power tools.
- Other equipment requiring an extremely stable power supply, such as microcomputer-controlled electric blankets or touch sensor lamps.
- Medical equipment.

Wireless Charging

The vehicle may have wireless charging in the storage under the armrest. The system wirelessly charges one PMA or Qi compatible mobile device.

To check for phone or other device compatibility:

- In the U.S., see my.cadillac.com/learn.
- In Canada, see gmtotalconnect.ca.
- Or, see your dealer for details.

⚠ Warning

Wireless charging can affect the operation of an implanted pacemaker or other medical devices. If you have one, it is recommended to consult with your doctor before using the wireless charging system.

The vehicle must be in ON/RUN, ACC/ACCESSORY, or Retained Accessory Power (RAP). The wireless charging feature may not correctly indicate charging when the vehicle is in RAP. See *Retained Accessory Power (RAP)* ⇨ *206*.

The operating temperature is −20 °C (−4 °F) to 60 °C (140 °F) for the charging system and 0 °C (32 °F) to 35 °C (95 °F) for the phone.

⚠ Warning

Remove all metal objects from the charging pad before charging your mobile device. Metal objects, such as coins, keys, rings, or paper clips, between the phone and charging pad will become very hot. On the rare occasion that the charging system does not detect a metal object, and the object gets wedged between the phone and charger, remove the phone and allow the metallic object to cool before removing it from the charging pad, to prevent burns.

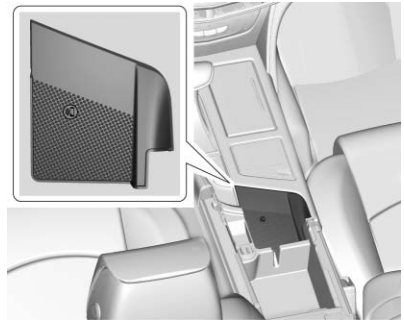

To charge a mobile device:

1. Remove all objects from the charging pad. The system may not charge if there are any objects on the charging pad.
2. Place the mobile device face up on the symbol on the charging pad and align it to the left wall of the charging bin.
3. The will display on the on the infotainment screen. This indicates that the mobile device is properly positioned and charging. If a phone is placed on the charging pad and does not display, remove the phone from the pad, turn 180 degrees and wait three seconds before placing/aligning the phone on the pad again.

Warning Lights, Gauges, and Indicators

Warning lights and gauges can signal that something is wrong before it becomes serious enough to cause an expensive repair or replacement. Paying attention to the warning lights and gauges could prevent injury.

Some warning lights come on briefly when the engine is started to indicate they are working. When one of the warning lights comes on and stays on while driving, or when one of the gauges shows there may be a problem, check the section that explains what to do. Waiting to do repairs can be costly and even dangerous.

Instrument Cluster (Base Level)

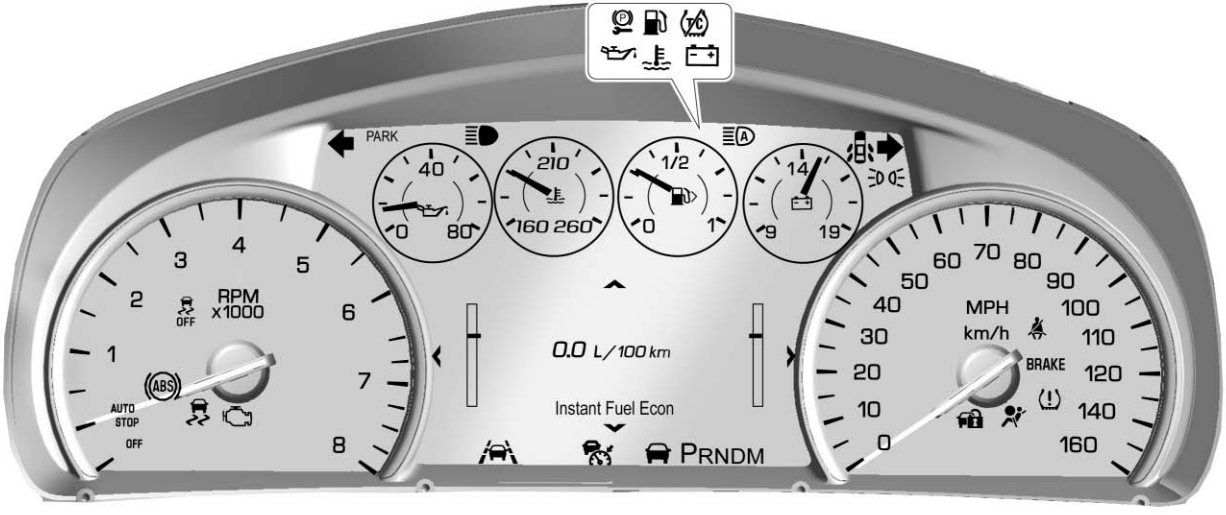

English Standard Theme Shown, Metric Similar

Cluster Menu

There is an interactive display area in the center of the instrument cluster.

Use the right steering wheel control to open and scroll through the different items and displays.

Press < to access the cluster applications. Use ∧ or ∨ to scroll through the list of available applications. Not all applications will be available on all vehicles.

- Info App. This is where the selected Driver Information Center (DIC) displays can be viewed. See *Driver Information Center (DIC)* ⇨ *140*.
- Audio
- Phone
- Navigation
- Settings

Audio

Press SEL to select the Audio app, then press > to enter the Audio menu. In the Audio menu browse for music, select from the favorites, or change the audio source. Use ∧ or ∨ to change the station or go to the next or previous track.

Phone

Press SEL to select the Phone app, then press > to enter the Phone menu. In the Phone menu, if there is no active phone call, view recent calls, or scroll through contacts. If there is an active call, mute the phone or switch to handset operation.

Navigation

Press SEL to select the Navigation app, then press > to enter the Navigation menu. If there is no active route, you can resume the last route and turn the voice prompts on/off. If there is an active route, press SEL to cancel or resume route guidance or turn the voice prompts on or off.

Settings

Press SEL to select the Settings app, then press > to enter the Settings menu. Use ∧ or ∨ to scroll through items in the Settings menu.

Units : Press > while Units is displayed to enter the Units menu. Choose English, Imperial, or metric units by pressing SEL while the desired item is highlighted.
A checkmark will be displayed next to the selected item.

Display Themes : There are three instrument cluster display configurations to choose from: Standard, Technology, and Media.

Info Pages : Press > while Info Pages is displayed to enter the Info Pages menu and select the items to be displayed in the Info app. See *Driver Information Center (DIC)* ⇨ *140*.

Speed Warning : The Speed Warning display allows the driver to set a speed that they do not want to exceed. To set the Speed Warning,

press > when Speed Warning is displayed. Press ∧ or ∨ to adjust the value. Press SEL to set the speed. Once the speed is set, this feature can be turned off by pressing SEL while viewing this page. If the selected speed limit is exceeded, a pop-up warning is displayed with a chime.

Software Information : Displays open source software information.

Instrument Cluster (Uplevel)

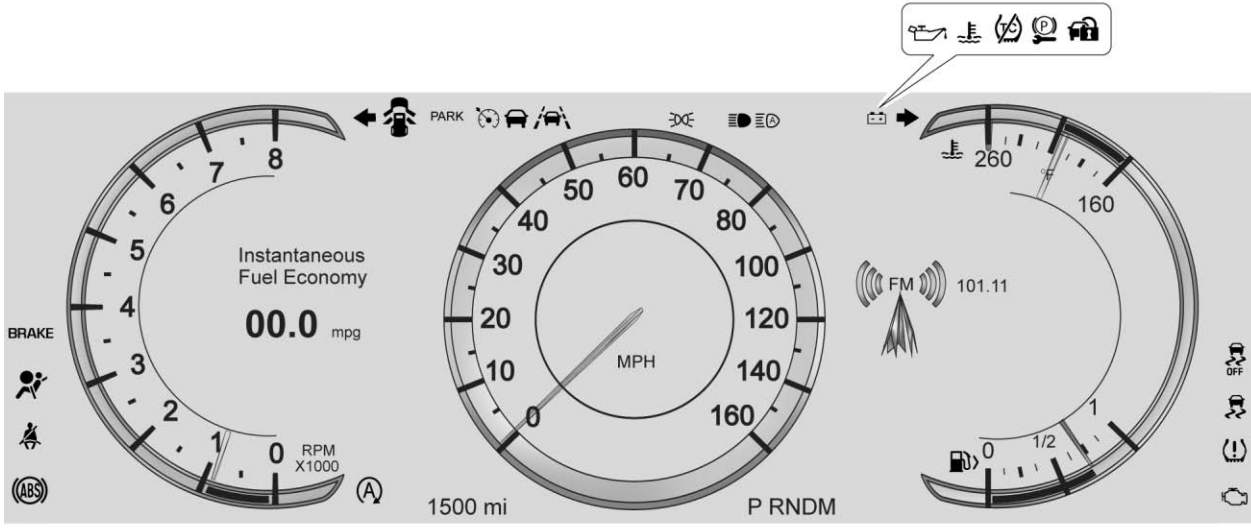

English Uplevel Balanced Cluster Shown, Metric Similar

Reconfigurable Instrument Cluster

The cluster display layout can be changed.

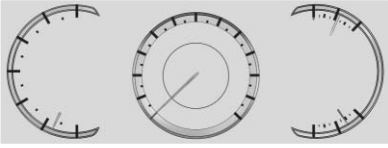

Balanced Configuration

The Balanced configuration has three interactive display zones: one in the center of each of the gauges.

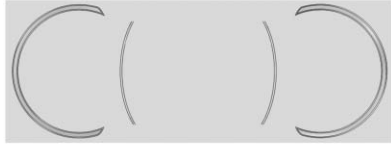

Enhanced Configuration

The Enhanced configuration has three interactive display zones.

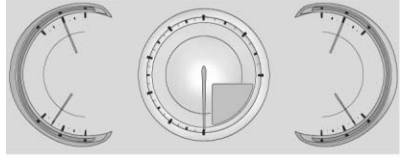

Performance Configuration (If Equipped)

The Performance configuration has two interactive display zones.

Use the five-way control on the right side of the steering wheel to move between the different display zones and scroll through the different displays.

To change the cluster configuration:

1. Find the Options page in one of the interactive display zones on the cluster.
2. Press SEL to enter the Options menu.
3. Scroll down to highlight Display Layout. Then press SEL to select it.
4. Each layout in the menu is represented by a small preview image of the display layout. Scroll up or down and highlight the selection. Press SEL to select the desired cluster configuration.
5. Exit the Display Layout menu by pressing <.

Cluster Application Displays

The cluster can display information regarding Navigation, Audio, and Phone.

Navigation

If there is no active route, a compass will be displayed. If there is an active route, press SEL to end route guidance or turn the voice prompts on or off.

Audio

While the Audio application page is displayed, press SEL to enter the Audio menu. In the Audio menu, search for music, select from favorites, or change the audio source

Phone

While the Phone application page is displayed, press SEL to enter the Phone menu. In the Phone menu, if there is no active phone call, view recent calls, select from favorites, or scroll through contacts. If there is an active call, mute the phone or switch to handset operation.

Cluster Options Menu

To enter the cluster Options menu:

1. Use the five-way control on the right side of the steering wheel to find the Options page in one of the interactive display zones on the cluster.
2. Press SEL on the center of the five-way control to enter the Options menu.

Units : Press SEL while Units is highlighted to enter the Units menu. Choose U.S. or metric units by pressing SEL while the desired item is highlighted. A checkmark will be displayed next to the selected item.

Info Pages : Press SEL while Info Pages is highlighted to select the items to be displayed in the DIC info displays. See *Driver Information Center (DIC)* ⇨ *140*.

Fav Button Options : Press SEL while Fav Button Options is highlighted to select between FAV Primary and SEEK Primary. This selection allows for configuration of the △ and ▽ steering wheel controls. When FAV Primary is selected, pressing △ and ▽ will go to the next or previous favorite and pressing and holding △ and ▽ will seek. When SEEK Primary is selected, pressing △ and ▽ will seek and pressing and holding △ and ▽ will go to the next or previous favorite.

Display Layout : Press SEL while Display Layout is highlighted to change the configuration of the cluster. See “Reconfigurable Instrument Cluster” earlier in this section.

Open Source Software : Press SEL while Open Source Software is highlighted to display open source software information.

Speedometer

The speedometer shows the vehicle's speed in either kilometers per hour (km/h) or miles per hour (mph).

Odometer

The odometer shows how far the vehicle has been driven, in either kilometers or miles.

Trip Odometer

The trip odometer shows how far the vehicle has been driven since the trip odometer was last reset.

The trip odometer is accessed and reset through the Driver Information Center (DIC). See *Driver Information Center (DIC)* ⇨ *140*.

Tachometer

The tachometer displays the engine speed in revolutions per minute (rpm).

On the base cluster, if the vehicle has the Stop/Start system, when the ignition is in ON/RUN, the tachometer indicates the vehicle status. When pointing to AUTO STOP, the engine is off but the vehicle is on and can move. The engine could auto start at any time. When the indicator points to OFF, the vehicle is off.

When the engine is on, the tachometer will indicate the engine's revolutions per minute (rpm). The tachometer may vary by several hundred rpm's, during Auto Stop mode, when the engine is shutting off and restarting.

A slight bump may be felt when the transmission is determining the most fuel efficient operating range.

Caution
If the engine is operated with the rpm's in the warning area at the high end of the tachometer, the vehicle could be damaged, and the damage would not be covered by the vehicle warranty. Do not operate the engine with the rpm's in the warning area.

Fuel Gauge

Base Level Standard Theme Shown

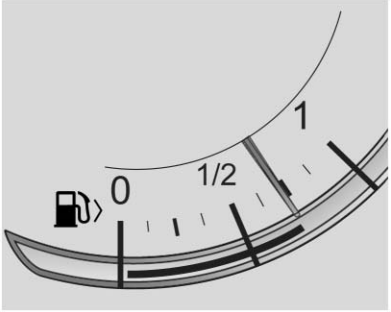

Uplevel Balanced Configuration Shown

When the ignition is on, the fuel gauge indicates about how much fuel is left in the tank.

There is an arrow near the fuel gauge pointing to the side of the vehicle the fuel door is on.

When the indicator nears empty, the low fuel light comes on. There still is a little fuel left, but the vehicle should be refueled soon.

Here are four things that some owners ask about. None of these show a problem with the fuel gauge:

- At the service station, the fuel pump shuts off before the gauge reads full.
- It takes a little more or less fuel to fill up than the gauge indicated. For example, the gauge may have indicated the tank was half full, but it actually took a little more or less than half the tank's capacity to fill the tank.
- The gauge moves a little while turning a corner or speeding up.
- The gauge takes a few seconds to stabilize after the ignition is turned on, and goes back to empty when the ignition is turned off.

Boost Gauge (Performance Configuration Only)

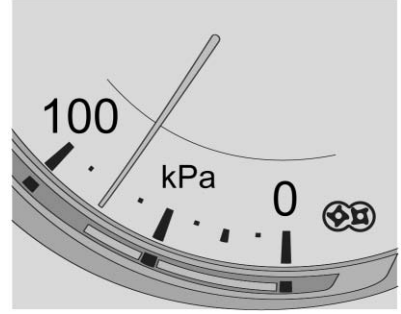

Metric

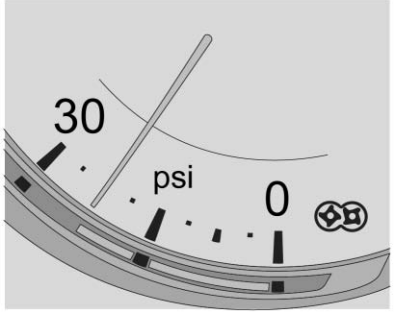

English

This gauge indicates boost under heavier throttle.

It displays the air pressure level in the intake manifold before it enters the engine's combustion chamber.

The gauge is automatically centered at zero every time the engine is started. Actual boost is displayed from this zero point. Changes in ambient pressure, such as driving in mountains and changing weather, will slightly change the zero reading.

Engine Oil Pressure Gauge (Base Level Cluster Only)

Metric, Standard Theme Shown

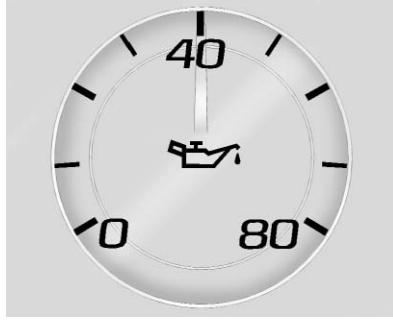

English, Standard Theme Shown

The engine oil pressure gauge shows the engine oil pressure in kPa (kilopascals) or psi (pounds per square inch) when the engine is running.

Oil pressure can vary with engine speed, outside temperature, and oil viscosity.

A reading outside the normal operating range can be caused by a dangerously low oil level or some other problem causing low oil pressure. Check the vehicle's oil as soon as possible. An oil pressure

message may display. See *Engine Oil Messages* ⇨ *149* and *Engine Oil* ⇨ *270*.

Caution

Lack of proper engine oil maintenance can damage the engine. Driving with the engine oil low can also damage the engine. The repairs would not be covered by the vehicle warranty. Check the oil level as soon as possible. Add oil if required, but if the oil level is within the operating range and the oil pressure is still low, have the vehicle serviced. Always follow the maintenance schedule for changing engine oil.

Engine Oil Temperature Gauge (Performance Configuration Only)

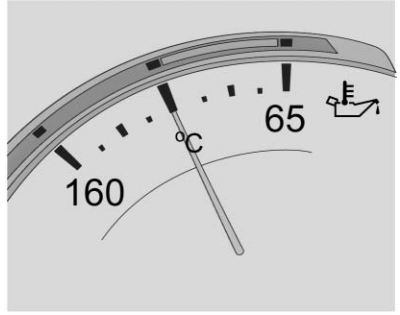

Metric

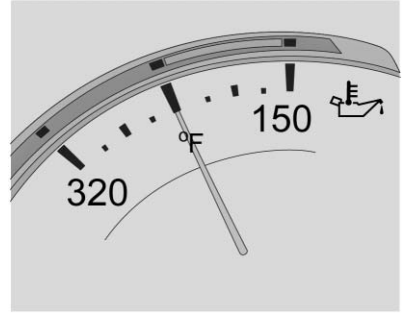

English

This gauge shows the engine oil temperature.

If the gauge pointer moves into the high end, it means that the engine oil has overheated. If the vehicle has been operated under normal driving conditions, pull off the road, stop the vehicle, and turn off the engine as soon as possible.

See *Engine Oil* ⇨ *270*.

Engine Coolant Temperature Gauge

Base Level Metric Standard Theme Shown

Base Level English Standard Theme Shown

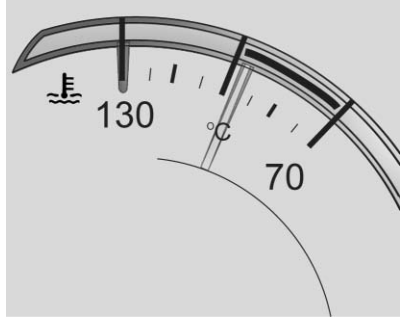

Uplevel Metric Balanced Configuration Shown

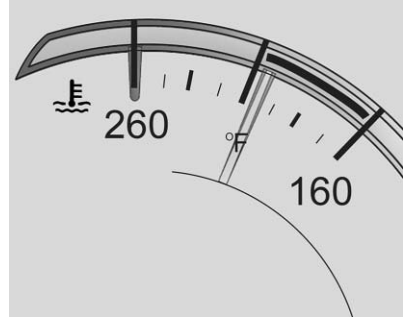

Uplevel English Balanced Configuration Shown

This gauge measures the temperature of the vehicle's engine coolant.

While driving under normal operating conditions, if the needle moves into the red area, the engine is too hot. Pull off the road, stop the vehicle, and turn off the engine as soon as possible.

Voltmeter Gauge (Base Level Cluster Only)

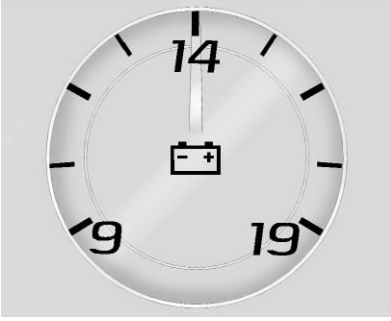

Standard Theme Shown

When the ignition is on, this gauge indicates the battery voltage.

When the engine is running, this gauge shows the condition of the charging system. The gauge can transition from a higher to lower or a lower to higher reading. This is normal. If the vehicle is operating outside the normal operating range, the charging system light comes on. See *Charging System Light* ⇨ *131*.

Readings outside the normal operating range can also occur when a large number of electrical accessories are operating in the vehicle and the engine is left idling for an extended period. This condition is normal since the charging system is not able to provide full power at engine idle. As engine speeds are increased, this condition should correct itself as higher engine speeds allow the charging system to create maximum power.

The vehicle can only be driven for a short time with the readings outside the normal operating range. If the vehicle must be driven, turn off all accessories, such as the radio and air conditioner, and unplug all chargers and accessories.

Readings outside the normal operating range indicate a possible problem in the electrical system. Have the vehicle serviced as soon as possible.

Safety Belt Reminders

Driver Safety Belt Reminder Light

There is a driver safety belt reminder light on the instrument cluster.

When the vehicle is started, this light flashes and a chime may come on to remind the driver to fasten their safety belt. Then the light stays on solid until the belt is buckled. This cycle may continue several times if the driver remains or becomes unbuckled while the vehicle is moving.

If the driver safety belt is buckled, neither the light nor the chime comes on.

Passenger Safety Belt Reminder Light

There is a passenger safety belt reminder light near the passenger airbag status indicator. See *Passenger Sensing System* ⇨ *82*.

When the vehicle is started, this light flashes and a chime may come on to remind passengers to fasten their safety belt. Then the light stays on solid until the belt is buckled. This cycle continues several times if the passenger remains or becomes unbuckled while the vehicle is moving.

If the passenger safety belt is buckled, neither the chime nor the light comes on.

The front passenger safety belt reminder light and chime may turn on if an object is put on the seat such as a briefcase, handbag, grocery bag, laptop, or other electronic device. To turn off the reminder light and/or chime, remove the object from the seat or buckle the safety belt.

Airbag Readiness Light

This light shows if there is an electrical problem with the airbag system. The system check includes the airbag sensor(s), the passenger sensing system, the pretensioners, the airbag modules, the wiring, and the crash sensing and diagnostic module. For more information on the airbag system, see *Airbag System* ⇨ *76*.

The airbag readiness light comes on for several seconds when the vehicle is started. If the light does not come on then, have it fixed immediately.

⚠ Warning

If the airbag readiness light stays on after the vehicle is started or comes on while driving, it means the airbag system might not be working properly. The airbags in the vehicle might not inflate in a crash, or they could even inflate without a crash. To help avoid injury, have the vehicle serviced right away.

If there is a problem with the airbag system, a Driver Information Center (DIC) message may also come on. See *Airbag System Messages* ⇨ *154*.

Passenger Airbag Status Indicator

The vehicle has a passenger sensing system. See *Passenger Sensing System* ⇨ *82*. The overhead console has a passenger airbag status indicator.

United States

Canada

When the vehicle is started, the passenger airbag status indicator will light ON and OFF, or the symbol for on and off, for several seconds as a system check. Then, after several more seconds, the status indicator will light either ON or OFF, or either the on or off symbol, to let you know the status of the front outboard passenger frontal airbag and knee airbag.

If the word ON or the on symbol is lit on the passenger airbag status indicator, it means that the front outboard passenger frontal airbag and knee airbag are allowed to inflate.

If the word OFF or the off symbol is lit on the airbag status indicator, it means that the passenger sensing system has turned off the front outboard passenger frontal airbag and knee airbag.

If, after several seconds, both status indicator lights remain on, or if there are no lights at all, there may be a problem with the lights or the passenger sensing system. See your dealer for service.

⚠ Warning

If the airbag readiness light ever comes on and stays on, it means that something may be wrong with the airbag system. To help avoid injury to yourself or others, have the vehicle serviced right away. See *Airbag Readiness Light* ⇨ *130* for more information, including important safety information.

Charging System Light

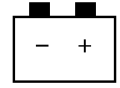

On some vehicles the charging system light comes on briefly when the ignition is turned on, but the engine is not running, as a check to show the light is working. It should go out when the engine is started. For vehicles with a reconfigurable cluster, this light may not come on when the ignition is turned on.

If the light stays on, or comes on while driving, there may be a problem with the electrical charging system. Have it checked by your dealer. Driving while this light is on could drain the battery.

When this light comes on, or is flashing, the Driver Information Center (DIC) also displays a message.

See *Battery Voltage and Charging Messages* ⇨ *147*.

If a short distance must be driven with the light on, be sure to turn off all accessories, such as the radio and air conditioner.

Malfunction Indicator Lamp (Check Engine Light)

This light is part of the vehicle's emission control on-board diagnostic system. If this light is on while the engine is running, a malfunction has been detected and the vehicle may require service. The light should come on to show that it is working when the ignition is in Service Only Mode. See *Ignition Positions* ⇨ *202*.

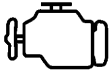

Malfunctions are often indicated by the system before any problem is noticeable. Being aware of the light and seeking service promptly when it comes on may prevent damage.

Caution

If the vehicle is driven continually with this light on, the emission control system may not work as well, the fuel economy may be lower, and the vehicle may not run smoothly. This could lead to costly repairs that might not be covered by the vehicle warranty.

Caution

Modifications to the engine, transmission, exhaust, intake, or fuel system, or the use of replacement tires that do not meet the original tire specifications, can cause this light to come on. This could lead to costly repairs not covered by the

(Continued)

Caution (Continued)

vehicle warranty. This could also affect the vehicle's ability to pass an Emissions Inspection/ Maintenance test. See *Accessories and Modifications* ⇨ *262*.

If the light is flashing : A malfunction has been detected that could damage the emission control system and increase vehicle emissions. Diagnosis and service may be required.

To help prevent damage, reduce vehicle speed and avoid hard accelerations and uphill grades. If towing a trailer, reduce the amount of cargo being hauled as soon as possible.

If the light continues to flash, find a safe place to park. Turn the vehicle off and wait at least 10 seconds before restarting the engine. If the light is still flashing, follow the

previous guidelines and see your dealer for service as soon as possible.

If the light is on steady : A malfunction has been detected. Diagnosis and service may be required.

Check the following:

- If fuel has been added to the vehicle using the capless funnel adapter, make sure that it has been removed. See “Filling the Tank with a Portable Gas Can” under *Filling the Tank* ⇨ *253*. The diagnostic system can detect if the adapter has been left installed in the vehicle, allowing fuel to evaporate into the atmosphere. A few driving trips with the adapter removed may turn off the light.
- Poor fuel quality can cause inefficient engine operation and poor driveability, which may go away once the engine is warmed up. If this occurs, change the fuel brand. It may require at least one full tank of the proper fuel to turn the light off. See *Fuel* ⇨ *251*.

If the light remains on, see your dealer.

Emissions Inspection and Maintenance Programs

If the vehicle requires an Emissions Inspection/Maintenance test, the test equipment will likely connect to the vehicle's Data Link Connector (DLC).

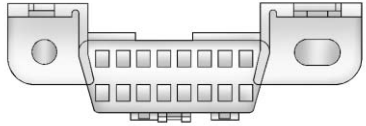

The DLC is under the instrument panel to the left of the steering wheel. Connecting devices that are not used to perform an Emissions Inspection/Maintenance test or to service the vehicle may affect vehicle operation. See *Add-On Electrical Equipment* ⇨ *260*. See your dealer if assistance is needed.

The vehicle may not pass inspection if:

- The light is on when the engine is running.
- The light does not come on when the ignition is in Service Only Mode.
- Critical emission control systems have not been completely diagnosed. If this happens, the vehicle would not be ready for inspection and might require several days of routine driving before the system is ready for inspection. This can happen if the 12-volt battery has recently been replaced or run down, or if the vehicle has been recently serviced.

See your dealer if the vehicle will not pass or cannot be made ready for the test.

Brake System Warning Light

The vehicle brake system consists of two hydraulic circuits. If one circuit is not working, the remaining

circuit can still work to stop the vehicle. For normal braking performance, both circuits need to be working.

If the warning light comes on, there is a brake problem. Have the brake system inspected right away.

BRAKE

Metric **English**

This light should come on briefly when the engine is started. If it does not come on then, have it fixed so it will be ready to warn you if there is a problem.

If the light comes on and stays on, there is a brake problem.

⚠ Warning

The brake system might not be working properly if the brake system warning light is on.

(Continued)

Warning (Continued)

Driving with the brake system warning light on can lead to a crash. If the light is still on after the vehicle has been pulled off the road and carefully stopped, have the vehicle towed for service.

Electric Parking Brake Light

PARK

Metric **English**

This light comes on when the parking brake is applied. If the light continues flashing after the parking brake is released, or while driving, there is a problem with the Electric Parking Brake system or another system. A message may also display in the Driver Information Center (DIC). See *Brake System Messages* ⇨ *147*.

If the light does not come on, or remains flashing, see your dealer.

Service Electric Parking Brake Light

On some vehicles the service electric parking brake light should come on briefly when the vehicle is in ON/RUN. If it does not come on, have it fixed so it will be ready to warn if there is a problem. For vehicles with the reconfigurable cluster, this light may not come on when the vehicle is in ON/RUN.

If this light stays on, there is a problem with a system on the vehicle that is causing the parking brake system to work at a reduced level. The vehicle can still be driven,

but should be taken to a dealer as soon as possible. See *Electric Parking Brake* ⇨ *214*. If a message displays in the Driver Information Center (DIC), see *Brake System Messages* ⇨ *147*.

Antilock Brake System (ABS) Warning Light

This light comes on briefly when the engine is started.

If the light does not come on, have it fixed so it will be ready to warn if there is a problem.

If the light comes on while driving, stop as soon as it is safely possible and turn off the vehicle. Then start the engine again to reset the system. If the ABS light stays on, or comes on again while driving, the vehicle needs service. A chime may also sound when the light comes on steady.

If the ABS light is the only light on, the vehicle has regular brakes, but the antilock brakes are not functioning.

If both the ABS and the brake system warning light are on, the vehicle's antilock brakes are not functioning and there is a problem with the regular brakes. See your dealer for service.

See *Brake System Warning Light* ⇨ *133* and *Brake System Messages* ⇨ *147*.

Lane Keep Assist (LKA) Light

For some vehicles, this light comes on briefly while starting the vehicle. If it does not come on, have the vehicle serviced.

For vehicles with the uplevel cluster, this light may not come on when starting the vehicle.

This light is green if LKA is available to assist.

LKA may assist by gently turning the steering wheel if the vehicle approaches a detected lane marking without using the turn signal in that direction. The LKA light will turn amber.

This light is amber and flashes as a Lane Departure Warning (LDW) alert, to indicate that the lane marking has been crossed.

See *Lane Keep Assist (LKA)* ⇨ *248*.

Vehicle Ahead Indicator

If equipped, this indicator will display green when a vehicle is detected ahead and amber when you are following a vehicle ahead much too closely.

See *Forward Collision Alert (FCA) System* ⇨ *237*.

Pedestrian Ahead Indicator

If equipped, this indicator will display amber when a nearby pedestrian is detected directly in front of the vehicle.

See *Front Pedestrian Braking (FPB) System* ⇨ *241*.

Traction Off Light

This light comes on briefly while starting the engine. If it does not, have the vehicle serviced by your dealer. If the system is working normally, the indicator light then turns off. For vehicles with a reconfigurable cluster, this light is in the display area and it may not come on when the ignition is turned on.

The traction off light comes on when the Traction Control System (TCS) has been turned off by pressing and releasing the TCS/StabiliTrak button.

This light and the StabiliTrak OFF light come on when StabiliTrak is turned off.

If the TCS is off, wheel spin is not limited. Adjust driving accordingly.

See *Traction Control/Electronic Stability Control* ⇨ *217*.

StabiliTrak® OFF Light

This light comes on briefly while starting the engine. If it does not, have the vehicle serviced by your dealer.

This light comes on when the StabiliTrak system is turned off. If StabiliTrak is off, the Traction Control System (TCS) is also off.

If StabiliTrak and TCS are off, the system does not assist in controlling the vehicle. Turn on the TCS and the StabiliTrak systems, and the warning light turns off.

See *Traction Control/Electronic Stability Control* ⇨ *217*.

Traction Control System (TCS)/StabiliTrak® Light

This light comes on briefly when the engine is started.

If the light does not come on, have the vehicle serviced by your dealer. If the system is working normally, the indicator light turns off.

If the light is on and not flashing, the TCS and potentially the StabiliTrak system have been disabled.
A Driver Information Center (DIC) message may display. Check the DIC messages to determine which feature(s) is no longer functioning and whether the vehicle requires service.

If the light is on and flashing, the TCS and/or the StabiliTrak system is actively working.

See *Traction Control/Electronic Stability Control* ⇨ *217*.

Engine Coolant Temperature Warning Light

On some vehicles this light comes on briefly while starting the vehicle. If it does not, have the vehicle serviced by the dealer. If the system is working normally the indicator light goes off. For vehicles with the reconfigurable cluster, this light may not come on when starting the vehicle.

Caution
The engine coolant temperature warning light indicates that the vehicle has overheated. Driving with this light on can damage the engine and it may not be covered by the vehicle warranty. See *Engine Overheating* ⇨ *280*.

The engine coolant temperature warning light comes on when the engine has overheated.

If this happens pull over and turn off the engine as soon as possible. See *Engine Overheating* ⇨ *280*.

Tire Pressure Light

For vehicles with the Tire Pressure Monitor System (TPMS), this light comes on briefly when the engine is started. It provides information about tire pressures and the TPMS.

When the Light Is On Steady

This indicates that one or more of the tires are significantly underinflated.

A Driver Information Center (DIC) tire pressure message may also display. See *Tire Messages* ⇨ *156*. Stop as soon as possible, and inflate the tires to the pressure value shown on the Tire and Loading Information label. See *Tire Pressure* ⇨ *306*.

When the Light Flashes First and Then Is On Steady

If the light flashes for about a minute and then stays on, there may be a problem with the TPMS. If the problem is not corrected, the light will come on at every ignition cycle. See *Tire Pressure Monitor Operation* ⇨ *309*.

Engine Oil Pressure Light

Caution

Lack of proper engine oil maintenance can damage the engine. Driving with the engine oil low can also damage the engine. The repairs would not be covered by the vehicle warranty. Check the oil level as soon as possible. Add oil if required, but if the oil level is within the operating range and the oil pressure is still low, have the vehicle serviced. Always follow the maintenance schedule for changing engine oil.

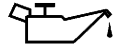

This light should come on briefly as the engine is started. If it does not come on, have the vehicle serviced by your dealer.

If the light comes on and stays on, it means that oil is not flowing through the engine properly. The vehicle could be low on oil and might have some other system problem. See your dealer.

Low Fuel Warning Light

This light is near the fuel gauge and comes on briefly when the ignition is turned on as a check to show it is working. For vehicles with a reconfigurable cluster, this light is in the display area and may not come on when the ignition is turned on.

It also comes on when the fuel tank is low on fuel. The light turns off when fuel is added. If it does not, have the vehicle serviced.

Auto Stop Mode (Uplevel Cluster)

This light comes on when the engine is in an Auto Stop.

See *Starting the Engine* ⇨ *204*.

Security Light

On some vehicles the immobilizer light should come on briefly as the engine is started. If it does not come on, have the vehicle serviced by your dealer. If the system is working normally, the indicator light turns off.

For vehicles with the reconfigurable cluster, this light may not come on when the engine is started.

If the light stays on and the engine does not start, there could be a problem with the theft-deterrent system. See *Immobilizer Operation* ⇨ *46*.

High-Beam On Light

This light comes on when the high-beam headlamps are in use.

See *Headlamp High/Low-Beam Changer* ⇨ *172*.

IntelliBeam® Light

This light comes on when the IntelliBeam system, if equipped, is enabled.

See *Exterior Lamp Controls* ⇨ *170*.

Lamps On Reminder

This light comes on when the exterior lamps are in use. See *Exterior Lamp Controls* ⇨ *170*.

Cruise Control Light

The cruise control light is white when the cruise control is on and ready, and turns green when the cruise control is set and active.

See *Cruise Control* ⇨ *220*.

Adaptive Cruise Control Light

This light is white when the Adaptive Cruise Control (ACC, if equipped) is on and ready, and turns green when the ACC is set and active. See *Adaptive Cruise Control* ⇨ *223*.

Door Ajar Light

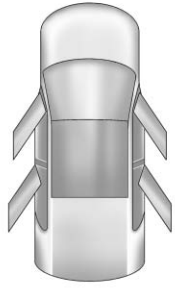

For vehicles equipped with this light, it comes on when a door is open or not securely latched. Before driving, check that all doors are properly closed. See *Door Ajar Messages* ⇨ *148* for more information.

Information Displays

Driver Information Center (DIC)

The DIC is displayed in the instrument cluster. It shows the status of many vehicle systems.

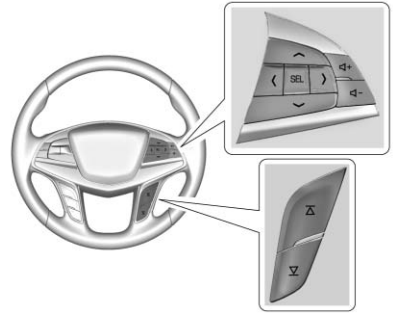

∧ or ∨ : Move SEL up or down to go to the previous or next selection.

< or > : Press to move between the interactive display zones in the cluster. Press < to go back to the previous menu.

SEL : Press to open a menu or select a menu item. Press and hold to reset values on certain screens.

DIC Information Display Options

The info displays on the DIC can be turned on or off through the Settings menu.

1. Press SEL while viewing the Settings page in one of the interactive display zones on the cluster.
2. Scroll to Info Pages and press SEL.
3. Press ∧ or ∨ to move through the list of possible info displays.
4. Press SEL while an item is highlighted to select or deselect that item. When an item is selected, a checkmark will appear next to it.

DIC Information Displays

The following is the list of all possible DIC information displays. Some of the information displays may not be available for your particular vehicle.

Speed (Base Cluster) : Shows the vehicle speed in either kilometers per hour (km/h) or miles per hour (mph).

Trip 1 or Trip 2 (Base Cluster) / Trip 1 or Trip 2 and Average Fuel Economy (Uplevel Cluster) : The Trip display shows the current distance traveled, in either kilometers (km) or miles (mi), since the trip odometer was last reset. The trip odometer can be reset by pressing and holding SEL while this display is active.

The Average Fuel Economy display shows the approximate average liters per 100 kilometers (L/100 km) or miles per gallon (mpg). This number is calculated based on the number of L/100 km (mpg) recorded since the last time this menu item was reset. This number reflects only the approximate average fuel economy that the vehicle has right now, and will change as driving conditions change. The Average Fuel Economy can be reset along with the trip odometer by pressing and holding SEL while this display is active.

Fuel Range : Shows the approximate distance the vehicle can be driven without refueling. LOW will be displayed when the vehicle is low on fuel. The fuel range estimate is based on an average of the vehicle's fuel economy over recent driving history and the amount of fuel remaining in the fuel tank.

Average Fuel Economy (Base Cluster) : Shows the approximate average liters per 100 kilometers (L/100 km) or miles per gallon (mpg). This number is calculated based on the number of L/100 km (mpg) recorded since the last time this menu item was reset. This number reflects only the approximate average fuel economy that the vehicle has right now, and will change as driving conditions change. The Average Fuel

Economy can be reset by pressing and holding SEL while this display is active.

Instantaneous Fuel Economy : Shows the current fuel economy in either liters per 100 kilometers (L/100 km) or miles per gallon (mpg). This number reflects only the approximate fuel economy that the vehicle has right now and changes frequently as driving conditions change.

Average Speed : Shows the average speed of the vehicle in kilometers per hour (km/h) or miles per hour (mph). This average is calculated based on the various vehicle speeds recorded since the last reset of this value. The average speed can be reset by pressing and holding SEL while this display is active.

Timer : This display can be used as a timer. To start the timer, press SEL while this display is active. The display will show the amount of time that has passed since the timer was last reset. To stop the timer, press SEL briefly while this display is active and the timer is running. To reset the timer to zero, press and hold SEL while this display is active.

Compass (Uplevel Cluster) : Shows the direction the vehicle is driving.

Driver Efficiency Gauge : Guide to driving in an efficient manner by keeping the ball green and in the center of the gauge. Hard braking or acceleration cause the ball to travel away from the center of the gauge.

Speed Limit : Shows the current speed limit. The information for this page comes from a roadway database.

Speed Warning : Allows the driver to set a speed that they do not want to exceed. To set the Speed Warning, press SEL when Speed Warning is displayed. Press ∧ or ∨ to adjust the value. This feature can be turned off by pressing and holding SEL while viewing this page. If the selected speed limit is exceeded, a pop-up warning is displayed and a chime may sound.

Cruise Set Speed : Shows the speed the cruise control or Adaptive Cruise Control is set to.

Driver Assistance (Uplevel Cluster) : May show information for Lane Keep Assist (LKA), Lane Departure Warning (LDW), Adaptive Cruise Control (ACC), and Forward Collision Alert (FCA). The display shows if there is a vehicle detected ahead, and the current FCA timing setting. In addition, when ACC is not engaged, the current follow time to the vehicle ahead is displayed as a time value on this page.

Battery Voltage : Shows the current battery voltage.

Oil Life : Shows an estimate of the oil's remaining useful life.
If REMAINING OIL LIFE 99% is displayed, that means 99% of the current oil life remains.

When the remaining oil life is low, the CHANGE ENGINE OIL SOON message will appear on the display. See *Engine Oil Messages* ⇨ *149*. The oil should be changed as soon as possible. See *Engine Oil* ⇨ *270*. In addition to the engine oil life

system monitoring the oil life, additional maintenance is recommended. See *Maintenance Schedule* ⇨ *344*.

The Oil Life display must be reset after each oil change. It will not reset itself. Do not reset the Oil Life display accidentally at any time other than when the oil has just been changed. It cannot be reset accurately until the next oil change. To reset the engine oil life system, press and hold SEL for several seconds while the Oil Life display is active. See *Engine Oil Life System* ⇨ *272*.

Tire Pressure : Shows the approximate pressures of all four tires. Tire pressure is displayed in either kilopascal (kPa) or in pounds per square inch (psi). If the pressure is low, the value for that tire is shown in amber. See *Tire Pressure Monitor System* ⇨ *308* and *Tire Pressure Monitor Operation* ⇨ *309*.

Vehicle Odometer (Base Cluster) : Shows the odometer.

Blank Page : Allows for no information to be displayed in the cluster info display areas.

Head-Up Display (HUD)

⚠ Warning

If the HUD image is too bright or too high in your field of view, it may take you more time to see things you need to see when it is dark outside. Be sure to keep the HUD image dim and placed low in your field of view.

If equipped with HUD, some information concerning the operation of the vehicle is projected onto the windshield. The image is projected through the HUD lens on top of the instrument panel. The information appears as an image focused out toward the front of the vehicle.

Caution

If you try to use the HUD image as a parking aid, you may misjudge the distance and damage your vehicle. Do not use the HUD image as a parking aid.

The HUD information can be displayed in various languages in some vehicles. The speedometer reading and other numerical values can be displayed in either English or metric units.

The language selection is changed through the radio and the units of measurement is changed through the instrument cluster. See *Vehicle Personalization* ⇨ *157* and “Cluster Options Menu” under *Instrument Cluster (Uplevel)* ⇨ *121* or *Instrument Cluster (Base Level)* ⇨ *118*.

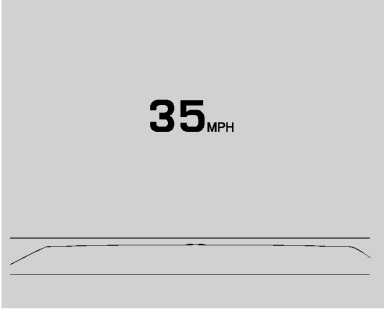

HUD Display on the Vehicle Windshield

The HUD may display some of the following vehicle information and vehicle messages or alerts:

- Speed
- Tachometer
- Audio
- Phone
- Navigation
- Collision Alert
- Cruise Control
- Lane Keep Assist
- Low Fuel

Some vehicle messages or alerts displayed in the HUD may be cleared by using the steering wheel controls. See *Vehicle Messages* ⇨ *146*.

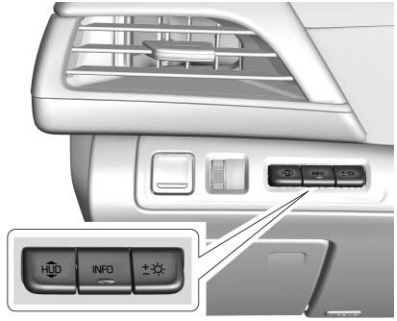

The HUD control is to the left of the steering wheel.

To adjust the HUD image:

1. Adjust the driver seat.
2. Start the engine.
3. Use the following settings to adjust the HUD.

HUD : Press down or lift up to center the HUD image. The HUD image can only be adjusted up and down, not side to side.

INFO : Press to select the display view. Each press will change the display view.

±☼ : Lift up and hold to brighten the display. Press down and hold to dim the display. Hold down to turn the display off.

The HUD image will automatically dim and brighten to compensate for outside lighting. The HUD brightness control can also be adjusted as needed.

The HUD image can temporarily light up depending on the angle and position of the sunlight on the HUD display. This is normal.

Polarized sunglasses could make the HUD image harder to see.

HUD Views

There are four views in the HUD. Some vehicle information and vehicle messages or alerts may be displayed in any view.

Metric

English

Speed View : This display gives the speedometer reading (in English or metric units), speed limit, Adaptive Cruise Control speed, Lane Departure Warning, and Vehicle Ahead indicator. Some information only appears on vehicles that have these features, and when they are active.

Metric

English

Audio/Phone View : This displays the speed view along with audio/phone information. The current radio station, media type, and incoming calls will be displayed.

All HUD views may briefly display audio information when the driver uses the steering wheel controls to adjust the audio settings appearing in the instrument cluster.

Incoming phone calls appearing in the instrument cluster may also display in any HUD view.

Metric

English

Navigation View : This display includes the information in the speed view along with Turn-by-Turn Navigation information in some vehicles. The compass heading is displayed when navigation routing is not active.

Navigation Turn-by-Turn Alerts shown in the instrument cluster may also be displayed in any HUD view.

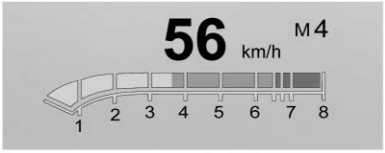

Metric

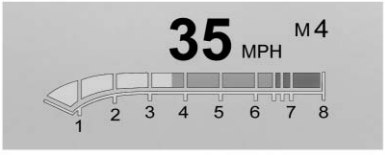

English

Performance View : This displays the speedometer reading, rpm reading, transmission positions, and gear shift indicator.

Care of the HUD

Clean the inside of the windshield to remove any dirt or film that could reduce the sharpness or clarity of the HUD image.

Clean the HUD lens with a soft cloth sprayed with glass cleaner. Wipe the lens gently, then dry it.

HUD Troubleshooting

Check that:

- Nothing is covering the HUD lens.
- HUD brightness setting is not too dim or too bright.
- HUD is adjusted to the proper height.
- Polarized sunglasses are not worn.
- Windshield and HUD lens are clean.

If the HUD image is not correct, contact your dealer.

The windshield is part of the HUD system. If the windshield needs replacing, see *Windshield Replacement* ⇨ *287*.

Vehicle Messages

Messages displayed on the DIC indicate the status of the vehicle or some action that may be needed to correct a condition. Multiple messages may display one after the other.

The messages that do not require immediate action can be acknowledged and cleared by pressing SEL. The messages that require immediate action cannot be cleared until that action is performed. All messages should be taken seriously and clearing the messages does not correct the problem.

The following are some of the vehicle messages that may be displayed depending on the vehicle content.

Battery Voltage and Charging Messages

BATTERY SAVER ACTIVE

This message displays when the vehicle has detected that the battery voltage is dropping beyond a reasonable point. The battery saver system starts reducing features of the vehicle that may be noticed. At the point that features are disabled, this message displays. Turn off unnecessary accessories to allow the battery to recharge.

LOW BATTERY

This message is displayed when the battery voltage is low. See *Battery - North America* ⇨ *284*.

SERVICE BATTERY CHARGING SYSTEM

This message is displayed when there is a fault in the battery charging system. Take the vehicle to your dealer for service.

TRANSPORT MODE ON

This message is displayed when the vehicle is in transport mode. Some features can be disabled while in this mode, including Remote Keyless Entry (RKE), remote start, and the vehicle alarm system. Take the vehicle to your dealer for service to turn transport mode off.

Brake System Messages

BRAKE FLUID LOW

This message is displayed when the brake fluid level is low. See *Brake Fluid* ⇨ *283*.

BRAKES OVERHEATED

This message is displayed when the brakes are becoming overheated. This may be seen when driving on hills. Shift to a lower gear.

STEP ON BRAKE TO RELEASE PARK BRAKE

This message is displayed if you attempt to release the Electric Parking Brake without the brake pedal applied. See *Electric Parking Brake* ⇨ *214*.

RELEASE PARKING BRAKE

This message is displayed if the Electric Parking Brake is on while the vehicle is in motion. See *Electric Parking Brake* ⇨ *214*.

SERVICE BRAKE ASSIST

This message may be displayed when there is a problem with the brake boost assist system. The brake boost assist motor may be heard and brake pedal pulsation may be felt. This is normal under these conditions. Take the vehicle to your dealer for service.

SERVICE PARKING BRAKE

This message is displayed when there is a problem with the parking brake. Take the vehicle to your dealer for service.

Compass Messages

The compass display will be blank if the vehicle temporarily loses communication with the Global Positioning System (GPS).

Cruise Control Messages

ADAPTIVE CRUISE SET TO XXX

This message displays when the Adaptive Cruise Control (ACC) speed is set. See *Adaptive Cruise Control* ⇨ *223*.

ADAPTIVE CRUISE TEMPORARILY UNAVAILABLE

This message displays when attempting to activate Adaptive Cruise Control (ACC) when it is temporarily unavailable. The ACC system does not need service.

This can occur under the following conditions:

- The radar is not clean. Keep the radar sensors free of mud, dirt, snow, ice, and slush. Clean the entire front and/or rear of the vehicle. For cleaning instructions, see *Exterior Care* ⇨ *333*.
- Heavy rain or snow is interfering with the radar object detection or camera performance.

CRUISE SET TO XXX

This message displays when the cruise control speed is set. See *Cruise Control* ⇨ *220*.

NO CRUISE BRAKING GAS PEDAL APPLIED

This message displays when Adaptive Cruise Control (ACC) is active and the driver is pressing the gas pedal. When this occurs, ACC will not brake. See *Adaptive Cruise Control* ⇨ *223*.

SERVICE ADAPTIVE CRUISE CONTROL

This message displays when the Adaptive Cruise Control (ACC) needs service. Take the vehicle to your dealer.

SHIFT TO PARK BEFORE EXITING

This message may display if Adaptive Cruise Control (ACC) is engaged holding the vehicle at a stop, and the driver attempts to exit the vehicle. Put the vehicle in P (Park) before exiting.

Door Ajar Messages

DOOR OPEN

A door open symbol will be displayed on the DIC showing which door is open. If the vehicle has been shifted out of P (Park), a DOOR OPEN message will also be displayed. The DOOR OPEN message may also be displayed if the vehicle starts to move. Close the door completely.

HOOD OPEN

This message will display along with a hood open symbol when the hood is open. A chime may also sound. Close the hood completely.

TRUNK OPEN

This message will display along with a symbol when the trunk is open. Close the trunk completely.

Engine Cooling System Messages

A/C OFF DUE TO HIGH ENGINE TEMP

This message displays when the engine coolant becomes hotter than the normal operating temperature. To avoid added strain on a hot engine, the air conditioning compressor automatically turns off. When the coolant temperature returns to normal, the air conditioning compressor turns back on. The vehicle can continue to be driven.

If this message continues to appear, have the system repaired by your dealer as soon as possible to avoid damage to the engine.

COOLANT LEVEL LOW ADD COOLANT

This message will display if the coolant is low. See *Engine Coolant* ⇨ *277*.

ENGINE OVERHEATED — IDLE ENGINE

This message displays when the engine coolant temperature is too hot. Stop and allow the vehicle to idle until it cools down.

ENGINE OVERHEATED — STOP ENGINE

This message displays and a continuous chime sounds if the engine cooling system reaches unsafe temperatures for operation. Stop and turn off the vehicle as soon as it is safe to do so to avoid severe damage. This message clears when the engine has cooled to a safe operating temperature.

HIGH COOLANT TEMPERATURE

This message may display if the coolant temperature is hot. See *Engine Overheating* ⇨ *280*.

Engine Oil Messages

CHANGE ENGINE OIL SOON

This message displays when the engine oil needs to be changed. When you change the engine oil, be sure to reset the oil life system. See *Engine Oil Life System* ⇨ *272*, *Driver Information Center (DIC)* ⇨ *140*, *Engine Oil* ⇨ *270*, and *Maintenance Schedule* ⇨ *344*.

ENGINE OIL HOT, IDLE ENGINE

This message displays when the engine oil temperature is too hot. Stop and allow the vehicle to idle until it cools down.

ENGINE OIL LOW — ADD OIL

On some vehicles, this message displays when the engine oil level may be too low. Check the oil level

before filling to the recommended level. If the oil is not low and this message remains on, take the vehicle to your dealer for service. See *Engine Oil* ⇨ *270*.

OIL PRESSURE LOW — TURN VEHICLE OFF

This message displays if low oil pressure levels occur. Stop the vehicle as soon as safely possible and do not operate it until the cause of the low oil pressure has been corrected. Check the oil as soon as possible and have the vehicle serviced by your dealer.

Engine Power Messages

ENGINE POWER IS REDUCED

This message displays when the vehicle's engine power is reduced. Reduced engine power can affect the vehicle's ability to accelerate. If this message is on, but there is no reduction in performance, proceed to your destination. The performance may be reduced the next time the vehicle is driven. The vehicle may be driven at a reduced speed while this message is on, but maximum acceleration and speed may be reduced. Anytime this message stays on, the vehicle should be taken to your dealer for service as soon as possible.

Fuel System Messages

FUEL LEVEL LOW

This message displays when the vehicle is low on fuel. Refuel as soon as possible.

Key and Lock Messages

NO REMOTE KEY WAS DETECTED PLACE KEY IN TRANSMITTER POCKET THEN START YOUR VEHICLE

This message displays when trying to start the vehicle if an RKE transmitter is not detected. The transmitter battery may be weak. See “Starting the Vehicle with a Low Transmitter Battery” under *Remote Keyless Entry (RKE) System Operation* ⇨ *29*.

NO REMOTE DETECTED

This message displays when the transmitter battery may be weak. See “Starting the Vehicle with a Low Transmitter Battery” under *Remote Keyless Entry (RKE) System Operation* ⇨ *29*.

NO REMOTE DETECTED PRESS BRAKE TO RESTART

This message displays when attempting to turn off the vehicle and the RKE transmitter is no longer detected. Restarting is allowed without the RKE transmitter for five minutes. Press the brake pedal and ENGINE START/STOP to restart the vehicle.

NUMBER OF KEYS PROGRAMMED

This message displays when programming new keys to the vehicle.

REMOTE LEFT IN VEHICLE

This message displays when leaving the vehicle with the RKE transmitter still inside.

REPLACE BATTERY IN REMOTE KEY

This message displays when the battery in the RKE transmitter needs to be replaced.

Lamp Messages

AUTOMATIC LIGHT CONTROL ON/OFF

This message is displayed when the automatic light control has been turned on or off. See *Automatic Headlamp System* ⇨ *172*.

XX TURN INDICATOR FAILURE

When one of the turn signals is out, this message displays to show which bulb needs to be replaced. See *Bulb Replacement* ⇨ *288* and *Replacement Bulbs* ⇨ *289*.

TURN SIGNAL ON

This message is displayed if the turn signal has been left on. Turn off the turn signal.

Object Detection System Messages

24 GHz RADARS OFF

This message displays when driving in certain areas where there may be radar interference. Adaptive Cruise Control (ACC), Forward Collision Alert (FCA), and the Front Automatic Braking (FAB) System may not work or may not work as well. The vehicle does not need service.

AUTOMATIC COLLISION PREP OFF

This message displays when the Front Automatic Braking (FAB) System has been turned off. See *Front Automatic Braking (FAB) System* ⇨ *240*.

AUTOMATIC COLLISION PREP REDUCED

If the vehicle has Adaptive Cruise Control (ACC), this message displays when the Front Automatic Braking (FAB) System has been set to the Alert setting. This setting disables FAB functions but if the vehicle has Adaptive Cruise Control (ACC), some last-second automatic braking capability is still provided, though less likely to occur. See *Front Automatic Braking (FAB) System* ⇨ *240*.

AUTOMATIC COLLISION PREP UNAVAILABLE

This message displays when the Front Automatic Braking (FAB) System has been unavailable for some time. The FAB System does not need service. This message can display under the following conditions:

- The front of the vehicle or windshield is not clean. Keep these areas clean and free of mud, dirt, snow, ice, and slush. For cleaning instructions, see *Exterior Care* ⇨ *333*.
- Heavy rain or snow is interfering with the object detection performance.

This message may also be displayed if there is a problem with the StabiliTrak system. See *Traction Control/Electronic Stability Control* ⇨ *217*.

FORWARD COLLISION ALERT OFF

This message displays when the Forward Collision Alert has been turned off.

FRONT CAMERA BLOCKED CLEAN WINDSHIELD

This message displays when the camera is blocked. The Front Pedestrian Braking (FPB), Forward Collision Alert (FCA), Front Automatic Braking (FAB), Lane Keep Assist (LKA), and Lane Departure Warning (LDW) features will not operate. Cleaning the outside of the windshield behind the rearview mirror may correct the issue.

LANE CHANGE ALERT OFF

This message indicates that the driver has turned the Side Blind Zone Alert (SBZA) and Lane Change Alert (LCA) systems off.

LANE KEEPING ASSIST UNAVAILABLE

This message displays when the Lane Keep Assist (LKA) and Lane Departure Warning (LDW) system is temporarily unavailable. The LKA system does not need service.

This message could be due to the camera being blocked. Clean the outside of the windshield behind the rearview mirror.

REAR AUTO BRAKE/PARK ASSIST OFF

This message displays when the Parking Assist system has been turned off or when there is a temporary condition causing the system to be disabled.

REAR AUTO BRAKE AND PARK ASSIST UNAVAILABLE

This message displays when attempting to activate the parking and backing features of the Driver Assistance System when they are temporarily unavailable. The system does not need service.

This can occur under the following conditions:

- The radar is not clean. Keep the radar sensors free of mud, dirt, snow, ice, and slush. Clean the entire front and/or rear of the vehicle. For cleaning instructions, see *Exterior Care* ⇨ *333*.
- Heavy rain or snow is interfering with the radar object detection or camera performance.

See *Driver Assistance Systems* ⇨ *230*.

SERVICE AUTOMATIC COLLISION PREP

If this message displays, take the vehicle to your dealer to repair the system. Adaptive Cruise Control

(ACC), Forward Collision Alert (FCA), and/or the Front Automatic Braking (FAB) System may not work. Do not use these systems until the vehicle has been repaired.

SERVICE DRIVER ASSIST SYSTEM

If this message displays, take the vehicle to your dealer to repair the system.

Adaptive Cruise Control (ACC), Forward Collision Alert (FCA), Front Automatic Braking (FAB), Assistance Systems for Parking or Backing, Lane Keep Assist (LKA), and/or Lane Departure Warning (LDW) may not work. Do not use these systems until the vehicle has been repaired.

SERVICE FRONT CAMERA

If this message remains on after continued driving, the vehicle needs service. Take the vehicle to your dealer. Do not use the Front Pedestrian Braking (FPB), Forward Collision Alert (FCA), Front Automatic Braking (FAB), Lane Keep Assist (LKA), and Lane Departure Warning (LDW) features.

SERVICE NIGHT VISION SYSTEM

The Night Vision system needs service. See your dealer.

SERVICE PARK ASSIST

This message displays if there is a problem with the Parking Assist system. Do not use this system to help you park. See your dealer for service.

SERVICE REAR AUTO BRAKE AND PARK ASSIST

This message displays if there is a problem with the parking and backing features of the Driver Assistance System. Do not use this system to help park or back the vehicle. See your dealer for service.

SERVICE SIDE DETECTION SYSTEM

If this message remains on after continued driving, the vehicle needs service. Take the vehicle to your dealer. Side Blind Zone Alert (SBZA), Lane Change Alert (LCA), and Rear Cross Traffic Alert (RCTA) features will not work.

SIDE DETECTION SYSTEM UNAVAILABLE

This message indicates that Side Blind Zone Alert (SBZA), Lane Change Alert (LCA), and Rear Cross Traffic Alert (RCTA) are disabled either because the sensor is blocked and cannot detect vehicles in the blind zone, or the vehicle is passing through an open area, such as the desert, where there is insufficient data for operation. This message may also activate during heavy rain or due to road spray. The vehicle does not need service. For cleaning, see "Washing the Vehicle" under *Exterior Care* ⇨ *333*.

TAKE STEERING

If LKA does not detect active driver steering, an alert and chime may be provided. Move the steering wheel to dismiss. See *Lane Keep Assist (LKA)* ⇨ *248*.

Ride Control System Messages

SERVICE ALL WHEEL DRIVE

This message displays when there is a problem with the AWD system. This message could be set by a number of issues, such as:

- A vehicle or an AWD system electronics problem.
- Various vehicle electrical issues.
- Worn out or overheated AWD clutch plates.
- Loss of fluids.

Some of these issues may require service of the AWD system.

If this message appears, stop when it is safe to do so and turn off the ignition for 30 seconds. Restart the vehicle and check for the message on the DIC display. If the message does not appear, it is not necessary to take the vehicle to your dealer.

SERVICE STABILITRAK

This message displays if there is a problem with the StabiliTrak system. See *Traction Control/Electronic Stability Control* ⇨ *217*.

SERVICE TRACTION CONTROL

This message displays when there is a problem with the Traction Control System (TCS). See *Traction Control/Electronic Stability Control* ⇨ *217*.

TRACTION CONTROL OFF

This message displays when the Traction Control System (TCS) has been turned off. See *Traction Control/Electronic Stability Control* ⇨ *217*.

TRACTION CONTROL ON

This message displays when the Traction Control System (TCS) has been turned on. See *Traction Control/Electronic Stability Control* ⇨ *217*.

Airbag System Messages

SERVICE AIRBAG

This message displays if there is a problem with the airbag system. See your dealer for service.

Safety Belt Messages

AUTOMATIC SEATBELT TIGHTENING UNAVAILABLE

This message displays when the Automatic Safety Belt Tightening System, if equipped, becomes unavailable. This could be caused by a temporary condition. If the message continues to display, see your dealer.

SERVICE AUTOMATIC SEATBELT TIGHTENING SYSTEM

If this message displays, take the vehicle to your dealer to repair the Automatic Safety Belt Tightening System, if equipped.

Security Messages

THEFT ATTEMPTED

This message displays if the vehicle detects a tamper condition.

Service Vehicle Messages

SERVICE POWER STEERING

This message displays and a chime may sound when there may be a problem with the power steering system. If this message displays and a reduction in steering performance or loss of power steering assistance is noticed, see your dealer.

SERVICE VEHICLE SOON

This message is displayed if there is a problem with the vehicle. Take the vehicle to your dealer for service.

Steering System Messages

ACTION REQUIRED TURN STEERING WHEEL START VEHICLE AGAIN

This message displays to indicate that the steering column lock device was unable to unlock the column, and the engine did not start. If this happens, immediately turn the steering wheel from side to side. If that does not unlock the steering column, turn the ignition off, and then open the driver door. Then turn the vehicle back on and turn the steering wheel from side to side for about 15 seconds. The steering column must be turned to each side immediately after pressing ENGINE START/STOP to help the steering column lock device unlock the column. In some situations it may take significant force. This situation may be avoided by straightening the front wheels before turning off the engine.

SERVICE ACTIVE STEERING SYSTEM

This message displays when there may be a problem with Active Rear Steer system. The rear wheels may be locked at current position and the driver may experience a small steering wheel correction for the vehicle going forward. If the problem persists for the next ignition cycle, see your dealer for service.

SERVICE STEERING COLUMN LOCK

This message displays when a problem with the steering column lock device has been detected. See your dealer for service.

STEERING COLUMN LOCKED

This message displays when the steering column is locked with the engine running. It is normal for the steering column to be locked during a remote start. The steering column should unlock after the brake pedal and ENGINE START/STOP are pressed.

Starting the Vehicle Messages

PRESS BRAKE TO START

This message is displayed when attempting to start the vehicle without first pressing the brake pedal.

SERVICE KEYLESS START SYSTEM

This message is displayed if there is a problem with the pushbutton start system. Take the vehicle to your dealer for service.

Tire Messages

SERVICE TIRE MONITOR SYSTEM

This message displays if there is a problem with the Tire Pressure Monitor System (TPMS). See *Tire Pressure Monitor Operation* ⇨ *309*.

TIRE LEARNING ACTIVE

This message displays when the system is learning new tires. See *Tire Pressure Monitor Operation* ⇨ *309*.

TIRE PRESSURE LOW ADD AIR TO TIRE

This message displays when the pressure in one or more of the tires is low.

This message also displays LEFT FRONT, RIGHT FRONT, LEFT REAR, or RIGHT REAR to indicate the location of the low tire.

The low tire pressure warning light will also come on. See *Tire Pressure Light* ⇨ *137*.

If a tire pressure message appears on the DIC, stop as soon as possible. Inflate the tires by adding air until the tire pressure is equal to the values shown on the Tire and Loading Information label. See *Tires* ⇨ *299*, *Vehicle Load Limits* ⇨ *198*, and *Tire Pressure* ⇨ *306*.

More than one tire pressure message can appear at a time. The DIC also shows the tire pressure values. See *Driver Information Center (DIC)* ⇨ *140*.

Transmission Messages

SERVICE TRANSMISSION

This message displays if there is a problem with the transmission. See your dealer.

SHIFT DENIED

This message displays when using Manual Mode and attempting to shift to a gear not appropriate for the vehicle speed and engine revolutions per minute (rpm). See *Manual Mode* ⇨ *212*.

SHIFT TO PARK

This message displays when the transmission needs to be shifted to P (Park). This may appear when turning the ignition off if the vehicle is not in P (Park).

TRANSMISSION HOT — IDLE ENGINE

This message displays and a chime sounds if the transmission fluid in the vehicle gets hot. Driving with the transmission fluid temperature high can cause damage to the vehicle. Stop the vehicle and let it idle to allow the transmission to cool. This message clears when the fluid temperature reaches a safe level.

Vehicle Reminder Messages

ICE POSSIBLE DRIVE WITH CARE

This message displays when ice conditions are possible.

Vehicle Speed Messages

SPEED LIMIT EXCEEDED

This message is displayed when the vehicle speed is greater than the set speed. See "Speed Warning" under *Driver Information Center (DIC)* ⇨ *140*.

Washer Fluid Messages

WASHER FLUID LOW ADD FLUID

This message may display when the washer fluid level is low. Fill the windshield washer reservoir as soon as possible. See *Engine Compartment Overview* ⇨ *265* for the location of the windshield washer reservoir. Also, see *Washer Fluid* ⇨ *281*.

Window Messages

OPEN, THEN CLOSE DRIVER/ PASSENGER WINDOW

This message is displayed when the window needs to be reprogrammed. If the vehicle's battery has been recharged or disconnected, you will need to program each front window for the express-up feature to work. See *Power Windows* ⇨ *52*.

Vehicle Personalization

Use the audio system controls to access the personalization menus for customizing vehicle features.

The following are all possible personalization features. Depending on the vehicle, some may not be available.

Infotainment System Audio System Controls

To access the personalization menu:

1. Touch SETTINGS on the Home Page of the infotainment system display.
2. Touch the desired feature to display a list of available options.
3. Touch to select the desired feature setting.
4. Touch < Back to exit or move backward in a menu.

Personalization Menus

The following list of menu items may be available:

- Time and Date
- Language (Language)
- Valet Mode
- Radio
- Vehicle
- Bluetooth
- Apple CarPlay
- Android Auto
- Voice
- TouchPad
- Display
- Rear Camera
- Return to Factory Settings
- Software Information

Each menu is detailed in the following information.

Time and Date

Manually set the time and date. See *Clock* ⇨ *113*.

Language (Language)

Select Language, then select from the available language(s).

The selected language will display on the system, and voice recognition will reflect the selected language.

Valet Mode (If Equipped)

This will lock the infotainment system and steering wheel controls. It may also limit access to vehicle storage locations (if equipped).

To enable valet mode:

1. Enter a four-digit code on the keypad.
2. Select Enter to go to the confirmation screen.
3. Re-enter the four-digit code.

Touch LOCK or UNLOCK to lock or unlock the system. Touch Back to go back to the previous menu.

Radio

Select and the following may display:

- Manage Favorites
- Number of Favorites Shown
- Audible Touch Feedback
- Bose Audio Pilot
- Maximum Start Up Volume

Manage Favorites

This allows favorites to be edited. See “Manage Favorites” in “Settings” under “Radio” in the infotainment manual.

Number of Favorites Shown

Touch to set the number of favorites to display.

Select the desired number or select Auto and the infotainment system will automatically adjust the number of favorites shown.

Audible Touch Feedback

This allows Audible Touch Feedback to be turned on or off.

Select Off or On.

Bose Audio Pilot

This feature adjusts the volume based on the noise in the vehicle. See “Bose AudioPilot Noise

Compensation Technology" under "Infotainment System Settings" in the infotainment manual.

Select Off or On.

Maximum Start Up Volume

This feature sets the maximum startup volume. If the vehicle is started and the volume is greater than this level, the volume is adjusted to this level.

To set the maximum startup volume, touch + or − to increase or decrease.

Vehicle

Select and the following may display:

- Climate and Air Quality
- Collision/Detection Systems
- Comfort and Convenience
- Lighting
- Power Door Locks
- Remote Lock, Unlock, Start

Climate and Air Quality

Select and the following may display:

- Auto Fan Speed
- Air Quality Sensor
- Auto Heated Seats
- Auto Defog
- Auto Rear Defog
- Ionizer

Auto Fan Speed

This feature will set the auto fan speed.

Select Low, Medium, or High.

Air Quality Sensor

This allows for selection of air quality sensor operation at high or low sensitivity.

Select Off, Low Sensitivity, or High Sensitivity.

Auto Heated Seats

When enabled, this feature will automatically activate heated seats at the level required by the interior temperature. See *Heated and Ventilated Front Seats* ⇨ *64*.

Select Off or On.

Auto Defog

When set to On, the front defog will automatically react to temperature and humidity conditions that may cause fogging.

Select Off or On.

Auto Rear Defog

If equipped, this allows the Auto Rear Defog to be turned on or off. This feature will automatically turn on the rear window defogger when it is cold outside.

Select Off or On.

Ionizer

If equipped and on, this feature purifies the air in the interior of the vehicle. See *Automatic Climate Control System (Quad Zone)* ⇨ *178* or *Automatic Climate Control System (Dual Zone)* ⇨ *185*.

Select Off or On.

Collision/Detection Systems

Select the Collision/Detection Systems menu and the following may be displayed if equipped:

- Alert Type
- Auto Collision Preparation
- Front Pedestrian Detection
- Go Notifier
- Rear Cross Traffic Alert
- Lane Change Alert

Alert Type

This feature will set crash alerts to beeps or seat vibrations. This setting affects all crash alerts including Forward Collision, Lane Departure Warning, Adaptive Cruise Control, Parking Assist, and Backing Warning alerts.

Select Beeps or Safety Alert Seat.

Auto Collision Preparation

This feature will turn on or off the Forward Collision Alert (FCA) and Front Automatic Braking (FAB). The Off setting disables all FCA and FAB functions. With the Alert and Brake setting, both FCA and FAB are available. The Alert setting disables FAB, but if the vehicle has Adaptive Cruise Control (ACC), some last-second automatic braking capability is still provided, though less likely to occur. See *Front Automatic Braking (FAB) System* ⇨ *240*.

Select Off, Alert, or Alert and Brake.

Front Pedestrian Detection

This feature will turn on or off the Front Pedestrian Braking (FPB) system alerts and automatic braking. The Off setting disables all FPB functions. With the Alert & Brake setting, system alerts and automatic braking are both available. The Alert setting disables automatic braking. See *Front Pedestrian Braking (FPB) System* ⇨ *241*.

Select Off, Alert, or Alert & Brake.

Go Notifier

This feature will give a reminder that Adaptive Cruise Control provides when it has brought the vehicle to a complete stop behind another stopping vehicle, and then that vehicle drives on.

Select Off or On.

Rear Cross Traffic Alert

This allows the Rear Cross Traffic Alert feature to be turned on or off.

Select Off or On.

Lane Change Alert

This allows the Lane Change Alert feature to be turned on or off.

Select Off or On.

Comfort and Convenience

Select and the following may display:

- Auto Memory Recall
- Easy Exit Options
- Chime Volume
- Reverse Tilt Mirror
- Auto Mirror Folding
- Rainsense Wipers

Auto Memory Recall

This feature automatically recalls the current driver's previously stored 1 or 2 button positions when entering the vehicle. See *Memory Seats* ⇨ *63*.

Select Off or On.

Easy Exit Options

This feature automatically recalls the current driver's previously stored exit button position when exiting the vehicle. See *Memory Seats* ⇨ *63*.

Select Off or On.

Chime Volume

This allows the selection of the chime volume level.

Touch + or − to adjust the volume.

Reverse Tilt Mirror

When on, both the driver and passenger outside mirrors will tilt downward when the vehicle is shifted to R (Reverse) to improve visibility of the ground near the rear wheels. They will return to their previous driving position when the vehicle is shifted out of R (Reverse) or the engine is turned off.

Select Off, On - Driver and Passenger, On - Driver, or On - Passenger.

Auto Mirror Folding

When on, the outside rearview mirrors will automatically fold or unfold when the Remote Keyless Entry (RKE) transmitter 🔒 or 🔓 button is pressed and held.

Select Off or On.

Rainsense Wipers

This allows the Rainsense Wipers feature to be disabled or enabled. See "Rainsense™" in *Windshield Wiper/Washer* ⇨ *111*.

Select Off or On.

Lighting

Select and the following may display:

- Vehicle Locator Lights
- Exit Lighting

Vehicle Locator Lights

This feature will flash the exterior lamps and allows some of the exterior lamps and most of the interior lamps to turn on briefly at night when 🔓 on the Remote Keyless Entry (RKE) transmitter is pressed to locate the vehicle.

Select Off or On.

Exit Lighting

This allows the selection of how long the exterior lamps stay on when leaving the vehicle when it is dark outside.

Select Off, 30 Seconds, 60 Seconds, or 120 Seconds.

Power Door Locks

Select and the following may display:

- Unlocked Door Anti-Lockout
- Auto Door Unlock
- Delayed Door Lock

Unlocked Door Anti-Lockout

When on, this feature will keep the driver door from locking when the door is open. If Off is selected, the Delayed Door Lock menu will be available.

Select Off, On.

Auto Door Unlock

This allows selection of which of the doors will automatically unlock when the vehicle is shifted into P (Park).

Select Off, All Doors, or Driver Door.

Delayed Door Lock

When on, this feature will delay the locking of the doors. To override the delay, press the power door lock switch on the door.

Select Off or On.

Remote Lock, Unlock, Start

Select and the following may display:

- Remote Unlock Light Feedback
- Remote Lock Feedback
- Remote Door Unlock
- Remote Start Auto Cool Seats
- Remote Start Auto Heat Seats
- Remote Window Operation
- Passive Door Unlock
- Passive Door Lock
- Remote Left in Vehicle Alert

Remote Unlock Light Feedback

When on, the exterior lamps will flash when unlocking the vehicle with the RKE transmitter.

Select Off or Flash Lights.

Remote Lock Feedback

This allows selection of what type of feedback is given when locking the vehicle with the RKE transmitter.

Select Off, Lights and Horn, Lights Only, or Horn Only.

Remote Door Unlock

This allows selection of which doors will unlock when pressing 🔓 on the RKE transmitter.

Select All Doors or Driver Door.

Remote Start Auto Cool Seats

If equipped and turned on, this feature will turn the ventilated seats on when using remote start on warm days.

Select Off, On-Driver and Passenger, or On-Driver.

Remote Start Auto Heat Seats

If equipped and turned on, this feature will turn the heated seats on when using remote start on cold days.

Select Off, On-Driver and Passenger, or On-Driver.

Remote Window Operation

This allows the window to be opened when pressing 🔓 on the RKE transmitter. See *Remote Keyless Entry (RKE) System Operation* ⇨ *29*.

Select Off or On.

Passive Door Unlock

This allows the selection of what doors will unlock when using the button on the driver door handle to unlock the vehicle.

Select All Doors or Driver Door.

Passive Door Lock

This allows passive locking to be turned on or off and selects feedback. See *Remote Keyless Entry (RKE) System Operation* ⇨ *29*.

Select Off, On with Horn Chirp, or On.

Remote Left in Vehicle Alert

This feature sounds an alert when the RKE transmitter is left in the vehicle.

Select Off or On.

Bluetooth

Select and the following may display:

- Pair New Device
- Device Management
- Ringtones
- Voice Mail Numbers
- Text Message Alerts

Pair New Device

Select to pair a new device. See “Pairing” in “Infotainment Controls” under “Bluetooth” in the infotainment manual.

Device Management

Select to connect to a different phone source, disconnect a phone, or delete a phone.

Ringtones

Touch to change the ring tone for the specific phone. The phone does not need to be connected to change the ring tone.

Voice Mail Numbers

This feature displays the voice mail number for all connected phones. To change the voice mail number, touch +. Type a new number, then touch SAVE.

Text Message Alerts

This feature allows text messages to be received. See “Text Messaging” under “Phone” in the infotainment manual.

Select Off or On.

Apple CarPlay™

Select and the following may display:

- Apple CarPlay
- Manage Apple CarPlay Devices

Apple CarPlay

This feature allows Apple devices to be connected to the infotainment system through a USB port.

Select Off or On.

Manage Apple CarPlay Devices

Select to manage Apple devices. Apple CarPlay must be on for this feature to be accessed.

Android Auto

Select and the following may display:

- Android Auto
- Manage Android Auto Devices

Android Auto

This feature allows Android devices to be connected to the infotainment system through a USB port.

Select Off or On.

Manage Android Auto Devices

Select to manage Android devices. Android Auto must be on for this feature to be accessed.

Voice

Select and the following may display:

- Confidence Threshold
- Prompt Length
- Audio Feedback Speed
- Display “What Can I Say?” Tips

Confidence Threshold

This feature allows the adjustment of the sensitivity of the speech recognition system.

Select Confirm More or Confirm Less.

Prompt Length

This feature adjusts the voice prompt length.

Select Short or Long.

Audio Feedback Speed

This feature adjusts the audio feedback speed.

Select Slow, Medium, or Fast.

Display “What Can I Say?” Tips

This feature gives voice command tips.

Select Off or On.

TouchPad

Select and the following may display:

- Tap to Enter
- Haptic Feedback
- TouchPad Surfaces
- Inversion
- Cursor Tracking Speed

Tap to Enter

When on, this allows tapping of the touchpad instead of pressing.

Touch to turn On or Off

Haptic Feedback

When on, feedback will be felt when touching selections on the screen.

Touch to turn On or Off

TouchPad Surface

Select and the following may display:

- Feature
- Information

Feature

This feature allows the touchpad to be turned on or off.

Touch to select Enabled or Disabled.

Information

Touch to read more about the touchpad feature.

Inversion

Select and the following may display:

- Up/Down
- Left/Right
- Information

Up/Down

This feature allows the finger gesture to be changed.

Touch to select Default or Inverted.

Left/Right

This feature allows the finger gesture to be changed.

Touch to select Default or Inverted.

Information

Touch to read more about the inversion feature.

Cursor Tracking Speed

This feature changes the speed of the cursor tracking.

Select Faster, Normal, or Slower.

Display

Select and the following may display:

- Proximity Sensing
- Calibrate Touchscreen
- Turn Display Off

Proximity Sensing

When on, certain screen buttons and features will become visible when a hand approaches the screen.

Select Off, On, or On-Map Only.

Calibrate Touchscreen

Select to calibrate the touchscreen, then follow the prompts.

Turn Display Off

Select to turn the display off. Touch anywhere on the display area or any faceplate button to turn the display on.

Rear Camera

This allows for Rear Park Assist Symbols and Guidance Lines to be turned off or on.

Select Off or On for the desired feature.

See *Assistance Systems for Parking or Backing* ⇨ *231*.

Return to Factory Settings

Select and the following may display:

- Restore Vehicle Settings
- Clear All Private Data
- Restore Radio Settings

Restore Vehicle Settings

This allows selection of restoring vehicle settings.

Select Restore or Cancel.

Clear All Private Data

This allows selection to clear all private information from the vehicle.

Select Delete or Cancel.

Restore Radio Settings

This allows selection to restore radio settings.

Select Restore or Cancel.

Software Information

Touch to view the version of the infotainment system software.

Universal Remote System

See *Radio Frequency Statement* ⇨ *371*.

Universal Remote System Programming

If equipped, these buttons are in the overhead console.

This system can replace up to three remote control transmitters used to activate devices such as garage door openers, security systems, and home automation devices. These instructions refer to a garage door opener, but can be used for other devices.

Do not use the Universal Remote system with any garage door opener that does not have the stop and reverse feature. This includes any garage door opener model manufactured before April 1, 1982.

Read these instructions completely before programming the Universal Remote system. It may help to have another person assist with the programming process.

Keep the original hand-held transmitter for use in other vehicles as well as for future programming. Erase the programming when vehicle ownership is terminated. See “Erasing Universal Remote System Buttons” later in this section.

To program a garage door opener, park outside directly in line with and facing the garage door opener receiver. Clear all people and objects near the garage door.

Make sure the hand-held transmitter has a new battery for quick and accurate transmission of the radio-frequency signal.

Programming the Universal Remote System

For questions or help programming the Universal Remote system, call 1-800-355-3515 or see www.homelink.com.

Programming involves time-sensitive actions, and may time out causing the procedure to be repeated.

To program up to three devices:

1. Hold the end of the hand-held transmitter about 3 to 8 cm (1 to 3 in) away from the Universal Remote system buttons with the indicator light in view. The hand-held transmitter was supplied by the manufacturer of the garage door opener receiver.
2. At the same time, press and hold both the hand-held transmitter button and one of the three Universal Remote system buttons to be used to operate the garage door. Do not release either button until the indicator light changes from a slow to a rapid flash. Then release both buttons.

   Some garage door openers may require substitution of Step 2 with the procedure under “Radio Signals for Canada and Some Gate Operators” later in this section.
3. Press and hold the newly programmed Universal Remote system button for five seconds while watching the indicator light and garage door activation.
   - If the indicator light stays on continuously or the garage door moves when the button is pressed, then programming is complete. There is no need to complete Steps 4–6.
   - If the indicator light does not come on or the garage door does not move, a second button press may be required. For a second time, press and hold the newly programmed button for five seconds. If the light stays on or the garage door moves, programming is complete.
   - If the indicator light blinks rapidly for two seconds, then changes to a solid light and the garage door does not move, continue with programming Steps 4–6.

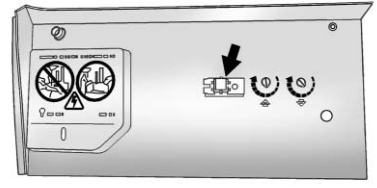

Learn or Smart Button

4. After completing Steps 1–3, locate the Learn or Smart button inside the garage on the garage door opener receiver.

The name and color of the button may vary by manufacturer.

5. Press and release the Learn or Smart button. Step 6 must be completed within 30 seconds of pressing this button.
6. Inside the vehicle, press and hold the newly programmed Universal Remote system button for two seconds and then release it. If the garage door does not move or the lamp on the garage door opener receiver does not flash, press and hold the same button a second time for two seconds, then release it. Again, if the door does not move or the garage door lamp does not flash, press and hold the same button a third time for two seconds, then release it.

The Universal Remote system should now activate the garage door.

Repeat the process for programming the two remaining buttons.

Radio Signals for Canada and Some Gate Operators

For questions or programming help call 1-800-355-3515 or see www.homelink.com.

Canadian radio-frequency laws and some U.S. gate operators require transmitter signals to time out or quit after several seconds of transmission. This may not be long enough for the Universal Remote system to pick up the signal during programming.

If the programming did not work, replace Step 2 under “Programming the Universal Remote System” with the following:

Press and hold the Universal Remote system button while pressing and releasing the hand-held transmitter button every two seconds until the signal has been successfully accepted by the Universal Remote system. The Universal Remote system indicator light will flash slowly at first and then rapidly. Proceed with Step 3 under “Programming the Universal Remote System” to complete.

Universal Remote System Operation

Using the Universal Remote System

Press and hold the appropriate Universal Remote system button for at least one-half second. The indicator light will come on while the signal is being transmitted.

Erasing Universal Remote System Buttons

Erase all programmed buttons when vehicle ownership is terminated.

To erase:

1. Press and hold the two outside buttons until the indicator light begins to flash. This should take about 10 seconds.
2. Release both buttons.

Reprogramming a Single Universal Remote System Button

To reprogram any of the system buttons:

1. Press and hold any one of the buttons. Do not release the button.
2. The indicator light will begin to flash after 20 seconds. Without releasing the button, proceed with Step 1 under “Programming the Universal Remote System.”

Lighting

Exterior Lighting
Exterior Lamp Controls 170
Exterior Lamps Off Reminder 172
Headlamp High/Low-Beam Changer 172
Flash-to-Pass 172
Daytime Running Lamps (DRL) 172
Automatic Headlamp System 172
Hazard Warning Flashers 173
Turn and Lane-Change Signals 173

Interior Lighting
Instrument Panel Illumination Control 174
Courtesy Lamps 174
Dome Lamps 174
Reading Lamps 175

Lighting Features
Entry Lighting 175
Exit Lighting 176
Battery Power Protection 176
Exterior Lighting Battery Saver 176

Exterior Lighting

Exterior Lamp Controls

The exterior lamp control is on the turn signal lever.

Turn the control to the following positions:

⏻ **:** Turns off the exterior lamps. The knob returns to the AUTO position after it is released. Turn to ⏻ again to reactivate the AUTO mode.

In Canada, the headlamps will automatically reactivate when the vehicle is shifted out of P (Park).

AUTO : Automatically turns the exterior lamps on and off, depending on outside lighting.

: Turns on the parking lamps including all lamps, except the headlamps.

: Turns on the headlamps together with the parking lamps and instrument panel lights.

IntelliBeam® System

If equipped, this system turns the vehicle's high-beam headlamps on and off according to surrounding traffic conditions.

The system turns the high-beam headlamps on when it is dark enough and there is no other traffic present.

This light comes on in the instrument cluster when the IntelliBeam system is enabled.

Turning On and Enabling IntelliBeam

To enable the IntelliBeam system, press the button on the end of the turn signal lever when the exterior lamp control is in the AUTO or position. The blue high-beam on light appears on the instrument cluster when the high beams are on.

Driving with IntelliBeam

The system only activates the high beams when driving over 40 km/h (25 mph).

There is a sensor near the top center of the windshield that automatically controls the system. Keep this area of the windshield clear of debris to allow for best system performance.

The high-beam headlamps remain on, under the automatic control, until one of the following situations occurs:

- The system detects an approaching vehicle's headlamps.
- The system detects a preceding vehicle's taillamps.
- The outside light is bright enough that high-beam headlamps are not required.
- The vehicle's speed drops below 20 km/h (12 mph).
- The IntelliBeam system is disabled by the high/low-beam changer or the flash-to-pass feature. If this happens, press the button on the end of the turn signal lever when the exterior lamp control is in the AUTO or position. The instrument cluster light will come on to indicate the IntelliBeam is reactivated. See *Headlamp High/Low-Beam Changer* ⇨ *172* and *Flash-to-Pass* ⇨ *172*.

The high beams may not turn off automatically if the system cannot detect another vehicle's lamps because of any of the following:

- The other vehicle's lamps are missing, damaged, obstructed from view, or otherwise undetected.
- The other vehicle's lamps are covered with dirt, snow, and/or road spray.
- The other vehicle's lamps cannot be detected due to dense exhaust, smoke, fog, snow, road spray, mist, or other airborne obstructions.
- The vehicle's windshield is dirty, cracked, or obstructed by something that blocks the view of the light sensor.
- The vehicle is loaded such that the front end points upward, causing the light sensor to aim high and not detect headlamps and taillamps.
- Driving on winding or hilly roads.

The automatic high-beam headlamps may need to be disabled if any of the above conditions exist.

Exterior Lamps Off Reminder

A warning chime sounds if the driver door is opened while the ignition is off and the exterior lamps are on.

Headlamp High/ Low-Beam Changer

: Push the turn signal lever away from you and release, to turn the high beams on. To return to low beams, push the lever again or pull it toward you and release.

This indicator light turns on in the instrument cluster when the high-beam headlamps are on.

Flash-to-Pass

To flash the high beams, pull the turn signal lever toward you, and release.

Daytime Running Lamps (DRL)

DRL can make it easier for others to see the front of your vehicle during the day. Fully functional DRL are required on all vehicles first sold in Canada.

If equipped with Light-Emitting Diode (LED) headlamps, the dedicated DRL will come on when all of the following conditions are met:

- The ignition is on.
- The exterior lamp control is in AUTO.
- The light sensor determines it is daytime.
- The parking brake is released or the vehicle is not in P (Park).

When the DRL are on, the taillamps, sidemarker lamps, and other lamps will not be on.

The DRL turn off when the headlamps are turned to ⏻ or the ignition is off.

Automatic Headlamp System

When the exterior lamp control is set to AUTO and it is dark enough outside, the headlamps come on automatically.

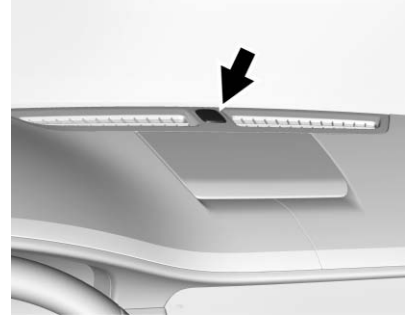

There is a light sensor on top of the instrument panel. Do not cover the sensor.

The system may also turn on the headlamps when driving through a parking garage or tunnel.

If the vehicle is started in a dark garage, the automatic headlamp system comes on immediately. If it is light outside when the vehicle leaves the garage, there is a slight delay before the automatic headlamp system changes to the DRL. During that delay, the instrument cluster may not be as bright as usual. Make sure the instrument panel brightness control is in the full bright position. See *Instrument Panel Illumination Control* ⇨ *174*.

When it is bright enough outside, the headlamps will turn off or may change to Daytime Running Lamps (DRL).

The automatic headlamp system turns off when the exterior lamp control is turned to ⏻ or the ignition is off.

For vehicles sold in Canada, this control only works when the transmission is in P (Park).

Lights On with Wipers

If the windshield wipers are activated in daylight with the engine on, and the exterior lamp control is in AUTO, the headlamps, parking lamps, and other exterior lamps come on. The transition time for the lamps coming on varies based on wiper speed. When the wipers are not operating, these lamps turn off.

Move the exterior lamp control to ⏻ or ⊃00⊂ to disable this feature.

Hazard Warning Flashers

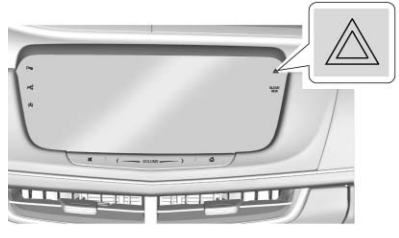

⚠ **:** Touch this button on the center stack to make the front and rear turn signal lamps flash on and off. Touch again to turn the flashers off.

The hazard warning flashers turn on automatically if the airbags deploy.

Turn and Lane-Change Signals

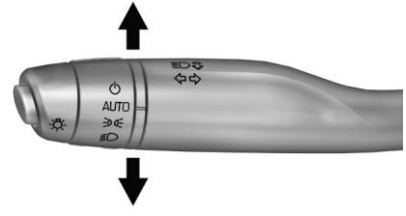

Move the lever all the way up or down to signal a turn.

An arrow on the instrument cluster flashes in the direction of the turn or lane change.

Raise or lower the lever until the arrow starts to flash to signal a lane change. Hold it there until the lane

change is completed. If the lever is briefly pressed and released, the turn signal flashes three times.

The turn and lane-change signal can be turned off manually by moving the lever back to its original position.

If after signaling a turn or lane change, the arrow flashes rapidly or does not come on, a signal bulb may be burned out.

Replace any burned out bulbs. If a bulb is not burned out, check the fuse. See *Fuses and Circuit Breakers* ⇨ *290*.

Interior Lighting

Instrument Panel Illumination Control

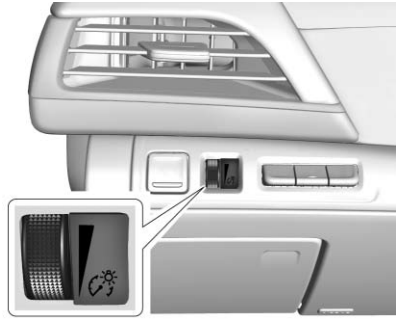

The brightness of the instrument panel lighting and steering wheel controls can be adjusted.

: Move the thumbwheel up or down to brighten or dim the lights.

The brightness of the displays automatically adjust based on outdoor lighting. The instrument panel illumination control will set the lowest level to which the displays will be automatically adjusted.

Courtesy Lamps

The courtesy lamps come on when any door is opened unless the dome lamp override is activated. To deactivate the dome lamp override, press OFF and the LED indicator on the button will turn off.

Dome Lamps

The dome lamp is in the overhead console.

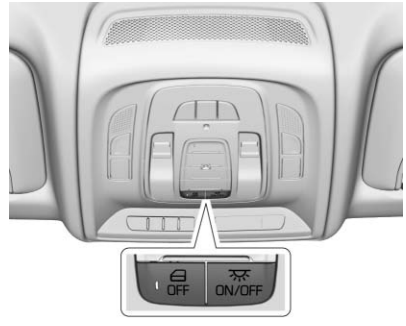

To change the dome lamp settings, press:

OFF : Turns the lamp off, even when a door is open.

ON/OFF : Turns the lamp on or off.

Reading Lamps

There are front and rear reading lamps on the overhead console and over the rear passenger doors. These lamps come on automatically when any door is opened.

To manually turn the reading lamps on or off:

Press or next to each overhead console reading lamp.

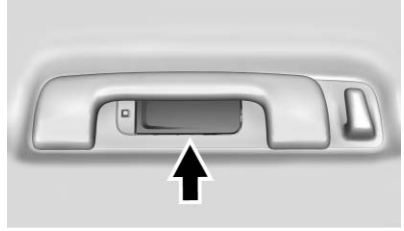

Press the lamp lenses over the rear passenger doors.

Lighting Features

Entry Lighting

Some exterior lamps and most of the interior lights turn on briefly at night, or in areas of limited lighting when is pressed on the Remote Keyless Entry (RKE) transmitter. See *Remote Keyless Entry (RKE) System Operation* ⇨ *29*. When the driver door is opened, all control lights, Driver Information Center (DIC) lights, and door pocket lights turn on. After about 30 seconds the exterior lamps turn off, then the remaining interior lights dim to off. Entry lighting can be disabled manually by changing the ignition out of the OFF position, or by pressing on the RKE transmitter.

This feature can be changed. See “Vehicle Locator Lights” under *Vehicle Personalization* ⇨ *157*.

Entry Lighting with Approach Detection

If equipped with approach detection, the entry lighting feature will automatically turn on when the RKE transmitter is detected within approximately 2 m (6 ft) of the vehicle.

If the vehicle has remained parked for an extended period of time with no RKE transmitter use or Keyless Access operation, approach detection will be disabled. To reactivate, press any button on the RKE transmitter or open and close all vehicle doors to re-enable the entry lighting feature on approach.

Exit Lighting

Some exterior lamps and interior lights come on at night, or in areas with limited lighting, when the driver door is opened after the ignition is turned off. The dome lamp comes on after the ignition is changed to the OFF position. The exterior lamps and dome lamp remain on for a set amount of time, then automatically turn off.

The exterior lamps turn off immediately by turning the exterior lamp control off.

This feature can be changed. See *Vehicle Personalization* ⇨ *157*.

Battery Power Protection

The battery saver feature is designed to protect the vehicle's battery.

If some interior lamps are left on and the ignition is turned off, the battery rundown protection system automatically turns the lamp off after some time.

Exterior Lighting Battery Saver

The exterior lamps turn off about 10 minutes after the ignition is turned off, if the parking lamps or headlamps have been manually left on. This protects against draining the battery. To restart the 10-minute timer, turn the exterior lamp control to the off position and then back to the parking lamp or headlamp position.

To keep the lamps on for more than 10 minutes, the ignition must be in the ACC/ACCESSORY or ON/RUN position.

Infotainment System

Introduction
Infotainment 177

Introduction

Infotainment

See the infotainment manual for information on the radio, audio players, rear seat infotainment, phone, navigation system, and voice or speech recognition. It also includes information on settings.

Climate Controls

Climate Control Systems
Automatic Climate Control System (Quad Zone) 178
Automatic Climate Control System (Dual Zone) 185

Air Vents
Air Vents 189

Maintenance
Passenger Compartment Air Filter 190
Service 190

Climate Control Systems

Automatic Climate Control System (Quad Zone)

The climate control buttons and the touch screen are used to adjust the heating, cooling, and ventilation.

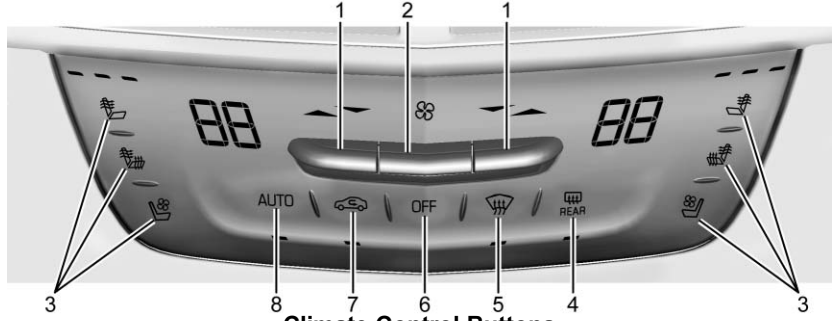

Climate Control Buttons

1. Driver and Passenger Temperature Controls
2. Fan Control
3. Driver and Passenger Heated and Ventilated Seats (If Equipped)
4. Rear Window Defogger
5. Defrost
6. OFF (Fan)
7. Recirculation
8. AUTO (Automatic Operation)

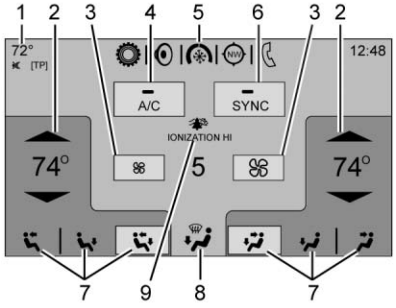

Climate Touch Screen Controls

1. Outside Temperature Display
2. Driver and Passenger Temperature Controls
3. Fan Control
4. A/C (Air Conditioning)
5. Climate Control Selection (Application Tray Button)
6. SYNC (Synchronized Temperature)
7. Driver and Passenger Air Delivery Mode Controls
8. Defog
9. Ionizer Status Indicator (If Equipped)

Climate Control Touch Screen

The fan, air delivery mode, air conditioning, driver and passenger temperatures, and SYNC settings can be controlled by touching CLIMATE on the infotainment home screen or the climate button in the touch screen application tray.
A selection can then be made on the front climate control page displayed. See the infotainment manual.

Climate Control Status Screen

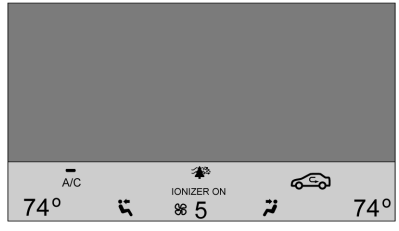

The climate control status screen appears briefly when the climate control buttons on the faceplate are adjusted.

Automatic Operation

The system automatically controls the fan speed, air delivery, air conditioning, and recirculation in order to heat or cool the vehicle to the desired temperature.

When the indicator light is on or AUTO is displayed on the touch screen, the system is in full automatic operation. If the air delivery mode or fan setting is manually adjusted, the auto indicator turns off and the display will show the selected settings. Auto operation can be turned off individually for climate settings.

For automatic operation:

1. Press AUTO.
2. Set the temperature. Allow the system time to stabilize. Then adjust the temperature as needed for best comfort.

To improve fuel efficiency and to cool the vehicle faster, recirculation may be automatically selected in warm weather. The recirculation light will not come on in AUTO mode. Press to select recirculation; press it again to select outside air.

English units can be changed to metric units through the instrument cluster. See “Cluster Options Menu” or “Cluster Menu” under *Instrument Cluster (Uplevel)* ⇨ *121* or *Instrument Cluster (Base Level)* ⇨ *118*.

OFF : Press to turn the fan on or off. The temperature control and air delivery mode can still be adjusted.

▲ / ▼ : The temperature can be adjusted separately for the driver and the passenger. Press to increase or decrease the temperature. Press and hold to rapidly increase or decrease the temperature.

The driver and passenger temperatures can also be adjusted by touching the buttons on the touch screen.

SYNC : Touch SYNC on the touch screen to link all climate zone settings to the driver settings. When all climate zone settings are linked the SYNC indicator will be lit. Adjust the driver side temperature control to change the linked temperature. When the front or rear passenger settings are adjusted, the SYNC indicator will turn off.

Manual Operation

▲ ▼ : Press the fan control buttons or the touch screen fan control, to increase or decrease the fan speed. Press and hold the buttons or the touch screen control to adjust speed more quickly. The fan speed setting displays. Pressing either button cancels automatic fan control and the fan can be controlled manually. Press AUTO to return to automatic operation.

Driver and Passenger Air Delivery Mode Controls : When the climate information is displayed, touch the desired air delivery mode on the touch screen to change the direction of the airflow. The selected air delivery mode button is lit. Touching any of the air delivery buttons cancels automatic air delivery control and the direction of the airflow can be controlled manually. Press AUTO to return to automatic operation.

To change the current mode, select one of the following:

: Air is directed to the instrument panel outlets.

: Air is divided between the instrument panel outlets and the floor outlets.

: Air is directed to the floor outlets.

: Clears the windows of fog or moisture. Air is directed to the windshield and floor outlets.

: Clears the windshield of fog or frost more quickly. Air is directed to the windshield. Press to turn on or off. Changing the air delivery mode also turns the defrost off.

A/C : Touch A/C on the touch screen to turn the automatic air conditioning on or off. If the fan is

turned off or the outside temperature falls below freezing, the air conditioner will not run.

Press AUTO to return to automatic operation and the air conditioner runs as needed.

Automatic Air Recirculation : When the AUTO indicator light is on, the air is automatically recirculated as needed to help quickly cool the inside of the vehicle.

The climate control system may have a sensor to detect air pollution. When using automatic air recirculation, the air quality control system may operate. To adjust the sensitivity of the air quality sensor, see “Climate and Air Quality” under *Vehicle Personalization* ⇨ *157*.

: Press to alternate between recirculating air inside the vehicle or pulling in outside air. The indicator light on the button is lit when recirculation mode is active. This helps to quickly cool the air inside the vehicle or reduce the outside air and odors that might enter.

Pressing this button cancels automatic recirculation. Press AUTO to return to automatic operation; recirculation runs automatically as needed.

Manual recirculation mode is not available when in Defrost or Defog modes.

Auto Defog : The climate control system may have a sensor to automatically detect high humidity inside the vehicle. When high humidity is detected, the climate control system may adjust to outside air supply and turn on the air conditioner. If the climate control system does not detect possible window fogging, it returns to normal operation. To turn Auto Defog off or on, see “Climate and Air Quality” under *Vehicle Personalization* ⇨ *157*.

Ionizer : If equipped with an ionizer, this feature helps to clean the air inside the vehicle and remove contaminants such as pollen, odors, and dust. If the climate control system is on and the ionizer is enabled, the ionizer status indicator will be lit on the climate control touch screen. To turn the ionizer on or off, see “Climate and Air Quality” under *Vehicle Personalization* ⇨ *157*.

Rear Window Defogger

REAR **:** Press to turn the rear window defogger on or off.

The rear window defogger can be set to automatic operation. See “Climate and Air Quality” under *Vehicle Personalization* ⇨ *157*. When Auto Rear Defog is selected, the rear window defogger turns on automatically when the interior temperature is cold and the outside temperature is about 4 °C (40 °F) and below.

The upper grid lines on the rear window are antenna lines and are not intended to heat when the defogger is activated.

The heated outside rearview mirrors turn on when the rear window defogger button is on and help to clear fog or frost from the surface of the mirrors.

Caution

Do not try to clear frost or other material from the inside of the front windshield and rear window with a razor blade or anything else that is sharp. This may damage the rear window defogger grid and affect the radio's ability to pick up stations clearly. The repairs would not be covered by the vehicle warranty.

Driver and Passenger Heated and Ventilated Seats (If Equipped) :

Press or to heat the driver or passenger seatback only.

Press or to heat the driver or passenger seat cushion and seatback.

Press or to ventilate the driver or passenger seat. See *Heated and Ventilated Front Seats* ⇨ *64*.

Remote Start Climate Control Operation : If equipped with the remote start feature, the climate control system may run when the vehicle is started remotely. The system uses the driver's previous settings to heat or cool the inside of the vehicle. The rear defog may come on during remote start based on cold ambient conditions. The rear defog indicator light does not come on during a remote start.
If equipped with heated or ventilated seats, they may come on during a remote start. See *Remote Vehicle Start* ⇨ *36* and *Heated and Ventilated Front Seats* ⇨ *64*.

Sensor

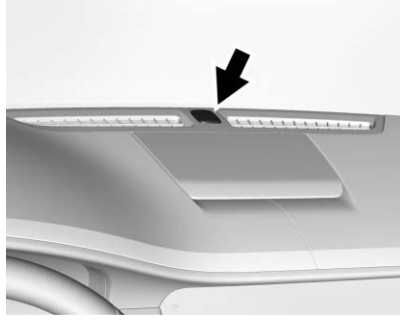

The solar sensor, on top of the instrument panel near the windshield, monitors the solar heat.

The climate control system uses the sensor information to adjust the temperature, fan speed, recirculation, and air delivery mode for best comfort.

If the sensor is covered, the automatic climate control system may not work properly.

Rear Climate Control System

The rear climate control system is on the rear of the center console. The settings can be adjusted with the rear climate control buttons and the touch screen.

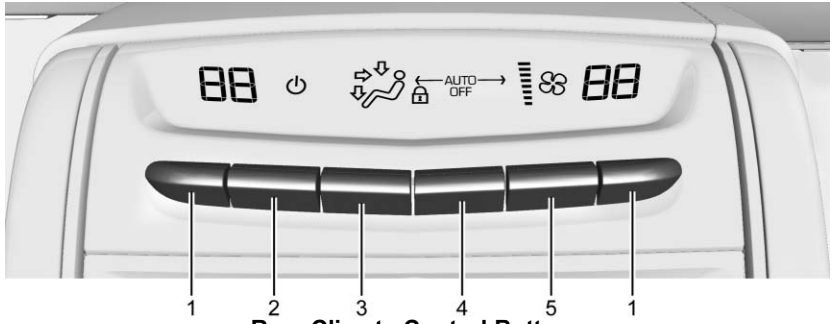

Rear Climate Control Buttons

1. Rear Driver Side and Passenger Side Seat Temperature Controls
2. ⏻ (On/Off)
3. Air Delivery Mode Control
4. AUTO (Automatic Operation)
5. Fan Control

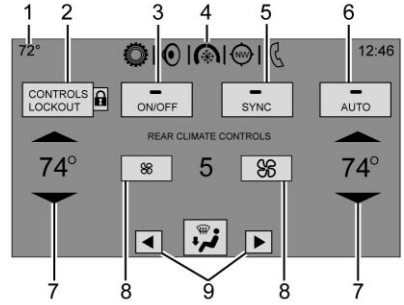

Rear Climate Touch Screen Controls

1. Outside Temperature Display
2. Rear Control Lockout
3. ON/OFF
4. Climate Control Selection (Application Tray Button)
5. SYNC (Synchronized Temperatures)
6. Rear AUTO (Automatic Operation)
7. Rear Driver Side and Passenger Side Climate Temperature Controls
8. Rear Fan Control

9. Air Delivery Mode Control

Rear : Touch Rear on the Home Page on the infotainment system display to open the rear climate control screen. The rear climate control settings can now be adjusted from the front passenger area.

⏻ **:** Press ⏻ or touch ON/OFF on the touch screen to turn the rear climate control on or off.

SYNC : Touch SYNC on the touch screen to match the rear climate control temperature to the front climate control driver temperature. The SYNC button will be lit.

Rear Control Lockout : Touch to lock or unlock control of the rear climate control system from the rear seat passengers. When locked, the rear climate control can only be adjusted from the front seat.

Automatic Operation

AUTO : Press to turn on or off. The air delivery is controlled automatically. The AUTO indicator appears on the display. If the air delivery mode is manually adjusted, this cancels full automatic operation.

Manual Operation

: Press or press and hold the rear fan button up or down to increase or decrease the rear climate airflow. The rear climate airflow can also be adjusted by touching the fan controls on the front climate touch screen.

Temperature Controls : Press or press and hold the rear temperature control buttons up or down to adjust the rear passenger temperatures. The rear passenger temperatures can also be adjusted by touching + for warmer air or − for cooler air on the front climate touch screen.

Air Delivery Mode Control : Press or press and hold the button up or down to select the desired air delivery mode. Touch the right and left arrows at the bottom of the touchscreen to change the direction of the airflow in the rear seating area.

Automatic Climate Control System (Dual Zone)

The climate control buttons and the touch screen are used to adjust the heating, cooling, and ventilation.

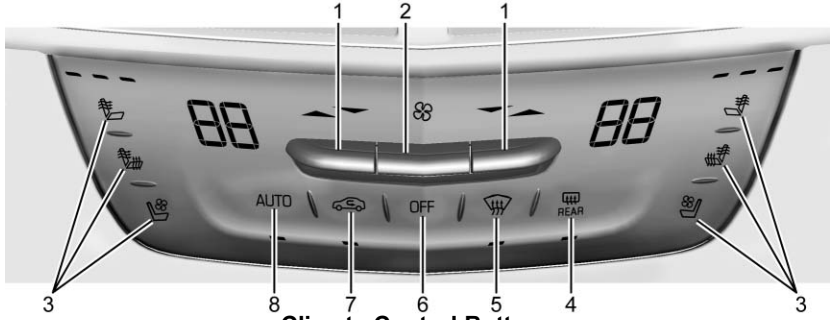

Climate Control Buttons

1. Driver and Passenger Temperature Controls
2. Fan Control
3. Driver and Passenger Heated and Ventilated Seats (If Equipped)
4. Rear Window Defogger
5. Defrost
6. OFF (Fan)
7. Recirculation
8. AUTO (Automatic Operation)

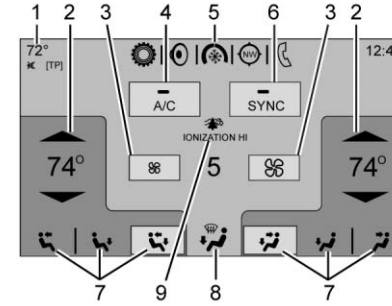

Climate Touch Screen Controls

1. Outside Temperature Display
2. Driver and Passenger Temperature Controls
3. Fan Control
4. A/C (Air Conditioning)
5. Climate Control Selection (Application Tray Button)
6. SYNC (Synchronized Temperature)
7. Driver and Passenger Air Delivery Mode Controls
8. Defog

9. Ionizer Status Indicator (If Equipped)

Climate Control Touch Screen

The fan, air delivery mode, air conditioning, driver and passenger temperatures, and SYNC settings can be controlled by touching CLIMATE on the infotainment home screen or the climate button in the touch screen application tray.
A selection can then be made on the front climate control page displayed. See the infotainment manual.

Climate Control Status Screen

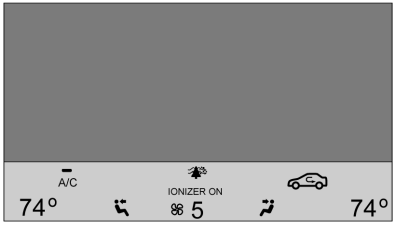

The climate control status screen appears briefly when the climate control buttons on the faceplate are adjusted.

Automatic Operation

The system automatically controls the fan speed, air delivery, air conditioning, and recirculation in order to heat or cool the vehicle to the desired temperature.

When the indicator light is on or AUTO is displayed on the touch screen, the system is in full automatic operation. If the air delivery mode or fan setting is manually adjusted, the auto indicator turns off and the display will show the selected settings. Auto operation can be turned off individually for climate settings.

For automatic operation:

1. Press AUTO.
2. Set the temperature. Allow the system time to stabilize. Then adjust the temperature as needed for best comfort.

To improve fuel efficiency and to cool the vehicle faster, recirculation may be automatically selected in warm weather. The recirculation light will not come on in AUTO mode. Press to select recirculation; press it again to select outside air.

English units can be changed to metric units through the instrument cluster. See “Cluster Options Menu” under *Instrument Cluster (Uplevel)* ⇨ *121* or *Instrument Cluster (Base Level)* ⇨ *118*.

OFF : Press to turn the fan on or off. The temperature control and air delivery mode can still be adjusted.

▲ / ▼ : The temperature can be adjusted separately for the driver and the passenger. Press up or down to increase or decrease the temperature. Press and hold up or down to rapidly increase or decrease the temperature.

The driver and passenger temperatures can also be adjusted by touching the buttons on the touch screen.

SYNC : Touch SYNC on the touch screen to link all climate zone settings to the driver settings. When all climate zone settings are linked, the SYNC indicator will be lit. Adjust the driver side temperature control to change the linked temperature. When the front or rear passenger settings are adjusted, the SYNC indicator will turn off.

Manual Operation

▲ ▼ **:** Press the fan control buttons up or down or touch the touch screen fan control, to increase or decrease the fan speed. Press and hold the buttons up or down or touch the touch screen control to adjust speed more quickly. The fan speed setting displays. Pressing either button cancels automatic fan control and the fan can be controlled manually. Press AUTO to return to automatic operation.

Driver and Passenger Air Delivery Mode Controls : When the climate information is displayed, touch the desired air delivery mode on the touch screen to change the direction of the airflow. The selected air delivery mode button is lit. Touching any of the air delivery buttons cancels automatic air delivery control and the direction of the airflow can be controlled manually. Press AUTO to return to automatic operation.

To change the current mode, select one of the following:

: Air is directed to the instrument panel outlets.

: Air is divided between the instrument panel outlets and the floor outlets.

: Air is directed to the floor outlets.

: Clears the windows of fog or moisture. Air is directed to the windshield and floor outlets.

: Clears the windshield of fog or frost more quickly. Air is directed to the windshield. Press to turn on or off. Changing the air delivery mode also turns the defrost off.

A/C : Touch A/C on the touch screen to turn the automatic air conditioning on or off. If the fan is turned off or the outside temperature falls below freezing, the air conditioner will not run.

Press AUTO to return to automatic operation and the air conditioner runs as needed.

Automatic Air Recirculation : When the AUTO indicator light is on, the air is automatically recirculated as needed to help quickly cool the inside of the vehicle.

The climate control system may have a sensor to detect air pollution. When using automatic air recirculation, the air quality control system may operate. To adjust the sensitivity of the air quality sensor, see “Climate and Air Quality” under *Vehicle Personalization* ⇨ *157*.

: Press to alternate between recirculating air inside the vehicle or pulling in outside air. The indicator light on the button is lit when recirculation mode is active. This helps to quickly cool the air inside the vehicle or reduce the outside air and odors that might enter.

Pressing this button cancels automatic recirculation. Press AUTO to return to automatic operation; recirculation runs automatically as needed.

Manual recirculation mode is not available when in Defrost or Defog modes.

Auto Defog : The climate control system may have a sensor to automatically detect high humidity inside the vehicle. When high humidity is detected, the climate control system may adjust to outside air supply and turn on the air conditioner. If the climate control system does not detect possible window fogging, it returns to normal operation. To turn Auto Defog off or on, see “Climate and Air Quality” under *Vehicle Personalization* ⇨ *157*.

Ionizer : If equipped with an ionizer, this feature helps to clean the air inside the vehicle and remove contaminants; such as pollen, odors, and dust. If the climate control system is on and the ionizer is enabled, the ionizer status indicator will be lit on the climate control touch screen. To turn the ionizer on or off, see “Climate and Air Quality” under *Vehicle Personalization* ⇨ *157*.

Rear Window Defogger

REAR **:** Press to turn the rear window defogger on or off.

The rear window defogger can be set to automatic operation. See “Climate and Air Quality” under *Vehicle Personalization* ⇨ *157*. When Auto Rear Defog is selected, the rear window defogger turns on automatically when the interior temperature is cold and the outside temperature is about 4 °C (40 °F) and below.

The upper grid lines on the rear window are antenna lines and are not intended to heat when the defogger is activated.

The heated outside rearview mirrors turn on when the rear window defogger button is on and help to clear fog or frost from the surface of the mirrors.

Caution

Do not try to clear frost or other material from the inside of the front windshield and rear window with a razor blade or anything else that is sharp. This may damage the rear window defogger grid and affect the radio's ability to pick up stations clearly. The repairs would not be covered by the vehicle warranty.

Driver and Passenger Heated and Ventilated Seats (If Equipped) :

Press or to heat the driver or passenger seatback only.

Press or to heat the driver or passenger seat cushion and seatback.

Press or to ventilate the driver or passenger seat. See *Heated and Ventilated Front Seats* ⇨ *64*.

Remote Start Climate Control Operation : If equipped with the remote start feature, the climate control system may run when the

vehicle is started remotely. The system uses the driver's previous settings to heat or cool the inside of the vehicle. The rear defog may come on during remote start based on cold ambient conditions. The rear defog indicator light does not come on during a remote start.
If equipped with heated or ventilated seats, they may come on during a remote start. See *Remote Vehicle Start* ⇨ *36* and *Heated and Ventilated Front Seats* ⇨ *64*.

Sensor

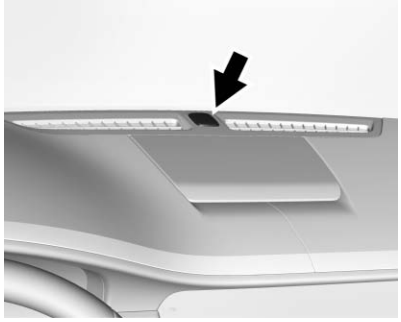

The solar sensor, on top of the instrument panel near the windshield, monitors the solar heat.

The climate control system uses the sensor information to adjust the temperature, fan speed, recirculation, and air delivery mode for best comfort.

If the sensor is covered, the automatic climate control system may not work properly.

Air Vents

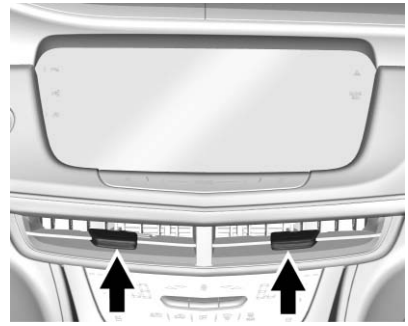

Adjustable air vents are in the center and on the sides of the instrument panel, on the rear of the center console storage, and in the headliner over the rear seats, if equipped.

Move the slider knobs to change the direction of or to close off the airflow.

Operation Tips

- Clear away any ice, snow, or leaves from air inlets at the base of the windshield that could block the flow of air into the vehicle.
- Keep the path under the front seats clear of objects to help circulate the air inside of the vehicle more effectively.
- Use of non-GM approved hood deflectors can adversely affect the performance of the system. Check with your dealer before adding equipment to the outside of the vehicle.
- Do not attach any devices to the air vent slats. This restricts airflow and may cause damage to the air vents.

Maintenance

Passenger Compartment Air Filter

The filter reduces dust, pollen, and other airborne irritants from outside air that is pulled into the vehicle. The filter should be replaced as part of routine scheduled maintenance. See *Maintenance Schedule* ⇨ *344*.

See your dealer regarding replacement of the filter.

Service

This vehicle has the new environmentally friendly refrigerant, R1234yf. This refrigerant has a significantly reduced global warming impact on the environment, compared to the traditional automotive refrigerant, R-134a. All vehicles have a label underhood that identifies the refrigerant used in the vehicle.

The refrigerant system should only be serviced by trained and certified technicians. The air conditioning evaporator should never be repaired or replaced by one from a salvage vehicle. It should only be replaced by a new evaporator to ensure proper and safe operation.

During service, all refrigerants should be reclaimed with proper equipment. Venting refrigerants directly to the atmosphere is harmful to the environment and may also create unsafe conditions based on inhalation, combustion, frostbite, or other health-based concerns.

Driving and Operating

Driving Information
Distracted Driving 192
Defensive Driving 193
Drunk Driving 193
Control of a Vehicle 193
Braking 193
Steering 194
Off-Road Recovery 194
Loss of Control 195
Driving on Wet Roads 195
Hill and Mountain Roads 196
Winter Driving 197
If the Vehicle Is Stuck 198
Vehicle Load Limits 198

Starting and Operating
New Vehicle Break-In 202
Ignition Positions 202
Starting the Engine 204
Retained Accessory Power (RAP) 206
Engine Coolant Heater 206
Shifting Into Park 207
Shifting out of Park 208
Parking over Things That Burn 209

Engine Exhaust
Engine Exhaust 209
Running the Vehicle While Parked 210

Automatic Transmission
Automatic Transmission 210
Manual Mode 212

Drive Systems
All-Wheel Drive 213

Brakes
Antilock Brake System (ABS) 214
Electric Parking Brake 214
Brake Assist 216
Hill Start Assist (HSA) 216
Automatic Vehicle Hold (AVH) 217

Ride Control Systems
Traction Control/Electronic Stability Control 217
Driver Mode Control 219

Cruise Control
Cruise Control 220
Adaptive Cruise Control 223

Driver Assistance Systems
Driver Assistance Systems . . . 230
Assistance Systems for Parking or Backing 231
Assistance Systems for Driving 237
Forward Collision Alert (FCA) System 237
Front Automatic Braking (FAB) System 240
Front Pedestrian Braking (FPB) System 241
Night Vision System 243
Side Blind Zone Alert (SBZA) 246
Lane Change Alert (LCA) 246
Lane Departure Warning (LDW) 248
Lane Keep Assist (LKA) 248
Surround Vision Recorder 250

Fuel
Fuel 251
California Fuel Requirements 253
Fuels in Foreign Countries . . . 253
Fuel Additives 253
Filling the Tank 253
Filling a Portable Fuel Container 255

Trailer Towing
General Towing Information 255
Driving Characteristics and Towing Tips 255
Trailer Towing 258
Towing Equipment 259

Conversions and Add-Ons
Add-On Electrical Equipment 260

Driving Information

Distracted Driving

Distraction comes in many forms and can take your focus from the task of driving. Exercise good judgment and do not let other activities divert your attention away from the road. Many local governments have enacted laws regarding driver distraction. Become familiar with the local laws in your area.

To avoid distracted driving, always keep your eyes on the road, hands on the wheel, and mind on the drive.

- Do not use a phone in demanding driving situations. Use a hands-free method to place or receive necessary phone calls.
- Watch the road. Do not read, take notes, or look up information on phones or other electronic devices.
- Designate a front seat passenger to handle potential distractions.
- Become familiar with vehicle features before driving, such as programming favorite radio stations and adjusting climate control and seat settings. Program all trip information into any navigation device prior to driving.
- Wait until the vehicle is parked to retrieve items that have fallen to the floor.
- Stop or park the vehicle to tend to children.
- Keep pets in an appropriate carrier or restraint.
- Avoid stressful conversations while driving, whether with a passenger or on a cell phone.

⚠ Warning

Taking your eyes off the road too long or too often could cause a crash resulting in injury or death. Focus your attention on driving.

See the infotainment manual for information on that system or the navigation system, if equipped, including pairing and using a cell phone.

Defensive Driving

Defensive driving means “always expect the unexpected.” The first step in driving defensively is to wear the safety belt. See *Safety Belts* ⇨ *70*.

- Assume that other road users (pedestrians, bicyclists, and other drivers) are going to be careless and make mistakes. Anticipate what they might do and be ready.
- Allow enough following distance between you and the driver in front of you.
- Focus on the task of driving.

Drunk Driving

Death and injury associated with drinking and driving is a global tragedy.

⚠ Warning

Drinking and then driving is very dangerous. Your reflexes, perceptions, attentiveness, and judgment can be affected by even a small amount of alcohol. You can have a serious — or even fatal — collision if you drive after drinking.

Do not drink and drive or ride with a driver who has been drinking. Ride home in a cab; or if you are with a group, designate a driver who will not drink.

Control of a Vehicle

Braking, steering, and accelerating are important factors in helping to control a vehicle while driving.

Braking

Braking action involves perception time and reaction time. Deciding to push the brake pedal is perception time. Actually doing it is reaction time.

Average driver reaction time is about three-quarters of a second. In that time, a vehicle moving at 100 km/h (60 mph) travels 20 m (66 ft), which could be a lot of distance in an emergency.

Helpful braking tips to keep in mind include:

- Keep enough distance between you and the vehicle in front of you.
- Avoid needless heavy braking.
- Keep pace with traffic.

If the engine ever stops while the vehicle is being driven, brake normally but do not pump the brakes. Doing so could make the pedal harder to push down. If the engine stops, there will be some power brake assist but it will be used when the brake is applied. Once the power assist is used up, it can take longer to stop and the brake pedal will be harder to push.

Steering

Variable Effort Steering

The vehicle has a steering system that varies the amount of effort required to steer the vehicle in relation to the speed of the vehicle.

The amount of steering effort required is less at slower speeds to make the vehicle more maneuverable and easier to park. At faster speeds, the steering effort increases to provide a sport-like feel to the steering. This provides maximum control and stability.

Electric Power Steering

The vehicle has electric power steering. It does not have power steering fluid. Regular maintenance is not required.

If power steering assist is lost due to a system malfunction, the vehicle can be steered, but may require increased effort. See your dealer if there is a problem.

If the steering wheel is turned until it reaches the end of its travel and is held against that position for an extended period of time, power steering assist may be reduced.

If steering assist is used for an extended period of time, power assist may be reduced.

Normal use of the power steering assist should return when the system cools down.

See specific vehicle steering messages under *Vehicle Messages* ⇨ *146*.

See your dealer if there is a problem.

Curve Tips

- Take curves at a reasonable speed.
- Reduce speed before entering a curve.
- Maintain a reasonable steady speed through the curve.
- Wait until the vehicle is out of the curve before accelerating gently into the straightaway.

Steering in Emergencies

- There are some situations when steering around a problem may be more effective than braking.
- Holding both sides of the steering wheel allows you to turn 180 degrees without removing a hand.
- Antilock Brake System (ABS) allows steering while braking.

Off-Road Recovery

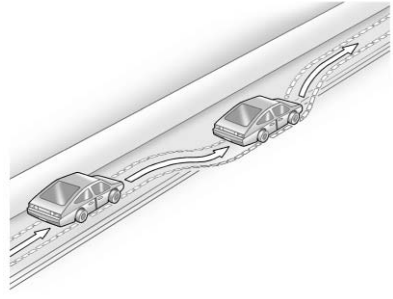

The vehicle's right wheels can drop off the edge of a road onto the shoulder while driving. Follow these tips:

1. Ease off the accelerator and then, if there is nothing in the way, steer the vehicle so that it straddles the edge of the pavement.
2. Turn the steering wheel about one-eighth of a turn, until the right front tire contacts the pavement edge.
3. Turn the steering wheel to go straight down the roadway.

Loss of Control

Skidding

There are three types of skids that correspond to the vehicle's three control systems:

- Braking Skid — wheels are not rolling.
- Steering or Cornering Skid — too much speed or steering in a curve causes tires to slip and lose cornering force.
- Acceleration Skid — too much throttle causes the driving wheels to spin.

Defensive drivers avoid most skids by taking reasonable care suited to existing conditions, and by not overdriving those conditions. But skids are always possible.

If the vehicle starts to slide, follow these suggestions:

- Ease your foot off the accelerator pedal and steer the way you want the vehicle to go. The vehicle may straighten out. Be ready for a second skid if it occurs.
- Slow down and adjust your driving according to weather conditions. Stopping distance can be longer and vehicle control can be affected when traction is reduced by water, snow, ice, gravel, or other material on the road. Learn to recognize warning clues — such as enough water, ice, or packed snow on the road to make a mirrored surface — and slow down when you have any doubt.
- Try to avoid sudden steering, acceleration, or braking, including reducing vehicle speed by shifting to a lower gear. Any sudden changes could cause the tires to slide.

Remember: Antilock brakes help avoid only the braking skid.

Driving on Wet Roads

Rain and wet roads can reduce vehicle traction and affect your ability to stop and accelerate. Always drive slower in these types of driving conditions and avoid driving through large puddles and deep-standing or flowing water.

⚠ Warning

Wet brakes can cause crashes. They might not work as well in a quick stop and could cause pulling to one side. You could lose control of the vehicle.

(Continued)

Warning (Continued)

After driving through a large puddle of water or a car/vehicle wash, lightly apply the brake pedal until the brakes work normally.

Flowing or rushing water creates strong forces. Driving through flowing water could cause the vehicle to be carried away. If this happens, you and other vehicle occupants could drown. Do not ignore police warnings and be very cautious about trying to drive through flowing water.

Hydroplaning

Hydroplaning is dangerous. Water can build up under the vehicle's tires so they actually ride on the water. This can happen if the road is wet enough and you are going fast enough. When the vehicle is hydroplaning, it has little or no contact with the road.

There is no hard and fast rule about hydroplaning. The best advice is to slow down when the road is wet.

Other Rainy Weather Tips

Besides slowing down, other wet weather driving tips include:

- Allow extra following distance.
- Pass with caution.
- Keep windshield wiping equipment in good shape.
- Keep the windshield washer fluid reservoir filled.
- Have good tires with proper tread depth. See *Tires* ⇨ *299*.
- Turn off cruise control.

Hill and Mountain Roads

Driving on steep hills or through mountains is different than driving on flat or rolling terrain. Tips include:

- Keep the vehicle serviced and in good shape.
- Check all fluid levels and brakes, tires, cooling system, and transmission.
- Shift to a lower gear when going down steep or long hills.

⚠ Warning

Using the brakes to slow the vehicle on a long downhill slope can cause brake overheating, can reduce brake performance, and could result in a loss of braking. Shift the transmission to a lower gear to let the engine assist the brakes on a steep downhill slope.

⚠ Warning

Coasting downhill in N (Neutral) or with the ignition off is dangerous. This can cause overheating of the brakes and loss of steering. Always have the engine running and the vehicle in gear.

- Drive at speeds that keep the vehicle in its own lane. Do not swing wide or cross the center line.

- Be alert on top of hills; something could be in your lane (e.g., stalled car, accident).
- Pay attention to special road signs (e.g., falling rocks area, winding roads, long grades, passing or no-passing zones) and take appropriate action.

Winter Driving

Driving on Snow or Ice

Snow or ice between the tires and the road creates less traction or grip, so drive carefully. Wet ice can occur at about 0 °C (32 °F) when freezing rain begins to fall. Avoid driving on wet ice or in freezing rain until roads can be treated.

For slippery road driving:

- Accelerate gently. Accelerating too quickly causes the wheels to spin and makes the surface under the tires slick.
- Turn on Traction Control. See *Traction Control/Electronic Stability Control* ⇨ *217*.
- Antilock Brake System (ABS) improves vehicle stability during hard stops, but the brakes should be applied sooner than when on dry pavement. See *Antilock Brake System (ABS)* ⇨ *214*.

  See *Driver Mode Control* ⇨ *219*
- Allow greater following distance and watch for slippery spots. Icy patches can occur on otherwise clear roads in shaded areas. The surface of a curve or an overpass can remain icy when the surrounding roads are clear. Avoid sudden steering maneuvers and braking while on ice.
- Turn off cruise control.

Blizzard Conditions

Stop the vehicle in a safe place and signal for help. Stay with the vehicle unless there is help nearby.
If possible, use Roadside Service. See *Roadside Service* ⇨ *364*. To get help and keep everyone in the vehicle safe:

- Turn on the hazard warning flashers.
- Tie a red cloth to an outside mirror.

⚠ Warning

Snow can trap engine exhaust under the vehicle. This may cause exhaust gases to get inside. Engine exhaust contains carbon monoxide (CO), which cannot be seen or smelled. It can cause unconsciousness and even death.

If the vehicle is stuck in snow:

- Clear snow from the base of the vehicle, especially any blocking the exhaust pipe.
- Open a window about 5 cm (2 in) on the vehicle side that is away from the wind, to bring in fresh air.
- Fully open the air outlets on or under the instrument panel.

(Continued)

Warning (Continued)

- Adjust the climate control system to circulate the air inside the vehicle and set the fan speed to the highest setting. See “Climate Control Systems.”

For more information about CO, see *Engine Exhaust* ⇨ *209*.

To save fuel, run the engine for short periods to warm the vehicle and then shut the engine off and partially close the window. Moving about to keep warm also helps.

If it takes time for help to arrive, when running the engine, push the accelerator pedal slightly so the engine runs faster than the idle speed. This keeps the battery charged to restart the vehicle and to signal for help with the headlamps. Do this as little as possible, to save fuel.

If the Vehicle Is Stuck

Slowly and cautiously spin the wheels to free the vehicle when stuck in sand, mud, ice, or snow.

If stuck too severely for the traction system to free the vehicle, turn the traction system off and use the rocking method. See *Traction Control/Electronic Stability Control* ⇨ *217*.

⚠ Warning

If the vehicle's tires spin at high speed, they can explode, and you or others could be injured. The vehicle can overheat, causing an engine compartment fire or other damage. Spin the wheels as little as possible and avoid going above 56 km/h (35 mph).

Rocking the Vehicle to Get it Out

Turn the steering wheel left and right to clear the area around the front wheels. Turn off any traction system. Shift back and forth between R (Reverse) and a low forward gear, spinning the wheels as little as possible. To prevent transmission wear, wait until the wheels stop spinning before shifting gears. Release the accelerator pedal while shifting, and press lightly on the accelerator pedal when the transmission is in gear. Slowly spinning the wheels in the forward and reverse directions causes a rocking motion that could free the vehicle. If that does not get the vehicle out after a few tries, it might need to be towed out. If the vehicle does need to be towed out, see *Towing the Vehicle* ⇨ *330*.

Vehicle Load Limits

It is very important to know how much weight the vehicle can carry. This weight is called the vehicle capacity weight and includes the weight of all occupants, cargo, and all nonfactory-installed options. Two labels on the vehicle may show how much weight it may

properly carry: the Tire and Loading Information label and the Certification label.

⚠ Warning

Do not load the vehicle any heavier than the Gross Vehicle Weight Rating (GVWR), or either the maximum front or rear Gross Axle Weight Rating (GAWR). This can cause systems to break and change the way the vehicle handles. This could cause loss of control and a crash. Overloading can also reduce stopping distance, damage the tires, and shorten the life of the vehicle.

Tire and Loading Information Label

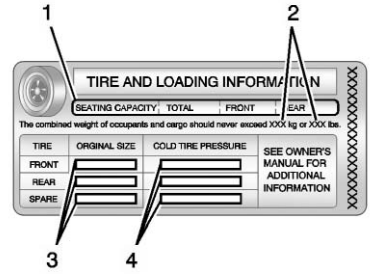

Label Example

A vehicle-specific Tire and Loading Information label is attached to the vehicle's center pillar (B-pillar). The Tire and Loading Information label shows the number of occupant seating positions (1), and the maximum vehicle capacity weight (2) in kilograms and pounds.

The Tire and Loading Information label also shows the tire size of the original equipment tires (3) and the recommended cold tire inflation pressures (4). For more information on tires and inflation see *Tires* ⇨ *299* and *Tire Pressure* ⇨ *306*.

There is also important loading information on the Certification label. It may show the Gross Vehicle Weight Rating (GVWR) and the Gross Axle Weight Rating (GAWR) for the front and rear axle. See “Certification Label” later in this section.

“Steps for Determining Correct Load Limit–

1. Locate the statement "The combined weight of occupants and cargo should never exceed XXX kg or XXX lbs." on your vehicle’s placard.
2. Determine the combined weight of the driver and passengers that will be riding in your vehicle.

3. Subtract the combined weight of the driver and passengers from XXX kg or XXX lbs.
4. The resulting figure equals the available amount of cargo and luggage load capacity. For example, if the "XXX" amount equals 1400 lbs. and there will be five 150 lb passengers in your vehicle, the amount of available cargo and luggage load capacity is 650 lbs. (1400-750 (5 x 150) = 650 lbs.)
5. Determine the combined weight of luggage and cargo being loaded on the vehicle. That weight may not safely exceed the available cargo and luggage load capacity calculated in Step 4.
6. If your vehicle will be towing a trailer, load from your trailer will be transferred to your vehicle. Consult this manual to determine how this reduces the available cargo and luggage load capacity of your vehicle."

See *Trailer Towing* ⇨ *258* for important information on towing a trailer, towing safety rules, and trailering tips.

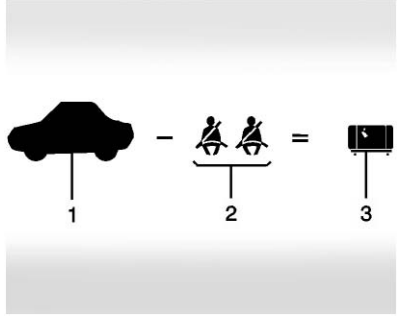

Example 1

1. Vehicle Capacity Weight for Example 1 = 453 kg (1,000 lbs).
2. Subtract Occupant Weight @ 68 kg (150 lbs) × 2 = 136 kg (300 lbs).
3. Available Occupant and Cargo Weight = 317 kg (700 lbs).

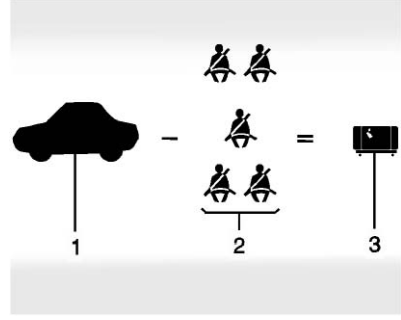

Example 2

1. Vehicle Capacity Weight for Example 2 = 453 kg (1,000 lbs).
2. Subtract Occupant Weight @ 68 kg (150 lbs) × 5 = 340 kg (750 lbs).
3. Available Cargo Weight = 113 kg (250 lbs).

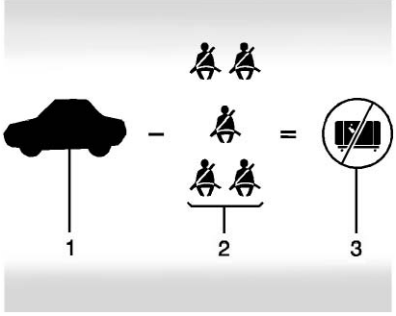

Example 3

1. Vehicle Capacity Weight for Example 3 = 453 kg (1,000 lbs).
2. Subtract Occupant Weight @ 91 kg (200 lbs) × 5 = 453 kg (1,000 lbs).
3. Available Cargo Weight = 0 kg (0 lbs).

Refer to the vehicle's Tire and Loading Information label for specific information about the vehicle's capacity weight and seating positions. The combined weight of the driver, passengers, and cargo should never exceed the vehicle's capacity weight.

Certification Label

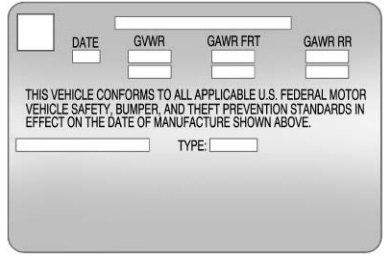

Label Example

A vehicle-specific Certification label is attached to the vehicle's center pillar (B-pillar). The label may show the gross weight capacity of the vehicle, called the Gross Vehicle Weight Rating (GVWR). The GVWR includes the weight of the vehicle, all occupants, fuel, and cargo.

⚠ Warning

Things inside the vehicle can strike and injure people in a sudden stop or turn, or in a crash.

- Put things in the cargo area of the vehicle. In the cargo area, put them as far forward as possible. Try to spread the weight evenly.
- Never stack heavier things, like suitcases, inside the vehicle so that some of them are above the tops of the seats.
- Do not leave an unsecured child restraint in the vehicle.
- Secure loose items in the vehicle.
- Do not leave a seat folded down unless needed.

Starting and Operating

New Vehicle Break-In

Follow these recommended guidelines during the first 2 400 km (1,500 mi) of driving this vehicle. Parts have a break-in period and performance will be better in the long run.

For the first 2 400 km (1,500 mi):

- Avoid full throttle starts and abrupt stops.
- Do not exceed 4000 engine rpm.
- Avoid driving at any one constant speed, fast or slow.
- Avoid downshifting to brake or slow the vehicle when the engine speed will exceed 4000 rpm.
- Do not let the engine labor. Never lug the engine in high gear at low speeds.
- Do not participate in track events, sport driving schools, or similar activities during this break-in period.
- Check engine oil with every refueling and add if necessary. Oil and fuel consumption may be higher than normal during the first 2 400 km (1,500 mi).
- To break in new tires, drive at moderate speeds and avoid hard cornering for the first 300 km (200 mi). New tires do not have maximum traction and may tend to slip.
- New brake linings also need a break–in period. Avoid making hard stops during the first 300 km (200 mi). This is recommended every time brake linings are replaced.

Ignition Positions

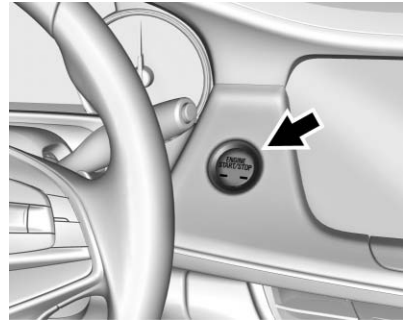

The vehicle has an electronic keyless ignition with pushbutton start.

Pressing the button cycles it through three modes: ACC/ACCESSORY, ON/RUN/START, and Stopping the Engine/OFF.

The Remote Keyless Entry (RKE) transmitter must be in the vehicle for the system to operate. If the pushbutton start is not working, the vehicle may be near a strong radio antenna signal causing interference

to the Keyless Access system. See *Remote Keyless Entry (RKE) System Operation* ⇨ *29*.

To shift out of P (Park), the vehicle must be in ACC/ACCESSORY or ON/RUN, and the brake pedal must be applied.

Stopping the Engine/OFF (No Indicator Lights) : When the vehicle is stopped, press ENGINE START/STOP once to turn the engine off.

If the vehicle is in P (Park), the ignition will turn off, and Retained Accessory Power (RAP) will remain active. See *Retained Accessory Power (RAP)* ⇨ *206*.

If the vehicle is not in P (Park), the ignition will return to ACC/ACCESSORY and display a message in the Driver Information Center (DIC). See *Transmission Messages* ⇨ *156*. When the vehicle is shifted into P (Park), the ignition system will switch to OFF.

Do not turn the engine off when the vehicle is moving. This will cause a loss of power assist in the brake and steering systems and disable the airbags.

If the vehicle must be shut off in an emergency:

1. Brake using a firm and steady pressure. Do not pump the brakes repeatedly. This may deplete power assist, requiring increased brake pedal force.
2. Shift the vehicle to N (Neutral). This can be done while the vehicle is moving. After shifting to N (Neutral), firmly apply the brakes and steer the vehicle to a safe location.
3. Come to a complete stop, shift to P (Park), and turn off the ignition.
4. Set the parking brake. See *Electric Parking Brake* ⇨ *214*.

⚠ Warning

Turning off the vehicle while moving may cause loss of power assist in the brake and steering systems and disable the airbags. While driving, only shut the vehicle off in an emergency.

If the vehicle cannot be pulled over, and must be shut off while driving, press and hold ENGINE START/STOP for longer than two seconds, or press twice in five seconds.

ACC/ACCESSORY (Amber Indicator Light) : This mode allows you to use some electrical accessories when the engine is off.

With the ignition off, pressing the button one time without the brake pedal applied will place the ignition system in ACC/ACCESSORY.

The ignition will switch from ACC/ACCESSORY to OFF after five minutes to prevent battery rundown.

ON/RUN/START (Green Indicator Light) : This mode is for driving and starting. With the ignition off, and the brake pedal applied, pressing the button once will place the ignition system in ON/RUN/START. Once engine cranking begins, release the button. Engine cranking will continue until the engine starts. See *Starting the Engine* ⇨ *204*. The ignition will then remain in ON/RUN.

Service Only Mode

This power mode is available for service and diagnostics, and to verify the proper operation of the malfunction indicator lamp as may be required for emission inspection purposes. With the vehicle off, and the brake pedal not applied, pressing and holding the button for more than five seconds will place the vehicle in Service Only Mode. The instruments and audio systems will operate as they do in ON/RUN, but the vehicle will not be able to be driven. The engine will not start in Service Only Mode. Press the button again to turn the vehicle off.

Starting the Engine

Move the shift lever to P (Park) or N (Neutral). To restart the engine when the vehicle is already moving, use N (Neutral) only.

Caution

Do not try to shift to P (Park) if the vehicle is moving. If you do, you could damage the transmission. Shift to P (Park) only when the vehicle is stopped.

Caution

If you add electrical parts or accessories, you could change the way the engine operates. Any resulting damage would not be covered by the vehicle warranty. See *Add-On Electrical Equipment* ⇨ *260*.

Starting Procedure

1. With the Keyless Access system, the Remote Keyless Entry (RKE) transmitter must be in the vehicle. Press ENGINE START/STOP with the brake pedal applied. When the engine begins cranking, let go of the button.

   The idle speed will go down as the engine gets warm. Do not race the engine immediately after starting it.

   If the RKE transmitter is not in the vehicle, if there is interference, or if the RKE battery is low, a Driver Information Center (DIC) will display a message. See *Key and Lock Messages* ⇨ *150* and *Remote Keyless Entry (RKE) System Operation* ⇨ *29*.

Caution

Cranking the engine for long periods of time, by returning the ignition to the START position immediately after cranking has ended, can overheat and damage the cranking motor, and drain the battery. Wait at least 15 seconds between each try, to let the cranking motor cool down.

2. If the engine does not start after five to 10 seconds, especially in very cold weather (below −18 °C or 0 °F), it could be flooded with too much gasoline. Try pushing the accelerator pedal all the way to the floor and holding it there as you press ENGINE START/STOP. Wait at least 15 seconds between each try, to allow the cranking motor to cool down. When the engine starts, release the accelerator. If the vehicle starts briefly but then stops again, do the same thing. This clears the extra gasoline from the engine. Do not race the engine immediately after starting it. Operate the engine and transmission gently until the oil warms up and lubricates all moving parts.

Stop/Start System

⚠ Warning

Exiting the vehicle without first shifting into P (Park) may cause the vehicle to move. You or others may be injured. Because the vehicle has the auto engine stop/start feature, the vehicle's engine might seem to be shut off; however, once the brake pedal is released, the engine will start up again.

Shift to P (Park) and turn the ignition to LOCK/OFF, before exiting the vehicle.

The vehicle has a fuel saving stop/start system to shut off the engine and help conserve fuel.

Auto Engine Stop/Start

When the brakes are applied and the vehicle is at a complete stop, the engine may turn off. When stopped, the tachometer displays AUTO STOP. See *Tachometer* ⇨ *124*. When the brake pedal is released or the accelerator pedal is pushed, the engine will restart.

Auto Stop may be deactivated if:

- A minimum vehicle speed is not reached.
- The engine or transmission is not at the required operating temperature.
- The outside temperature is not in the required operating range, typically between −10 °C (14 °F) and 50 °C (122 °F).
- The shift lever is in any gear other than D (Drive).
- The battery has been recently disconnected.
- The battery charge is low.
- The interior comfort level has not reached the required level for the climate control system or

defog settings. See *Automatic Climate Control System (Quad Zone)* ⇨ *178* or *Automatic Climate Control System (Dual Zone)* ⇨ *185*.

- The Auto Stop time is greater than two minutes.

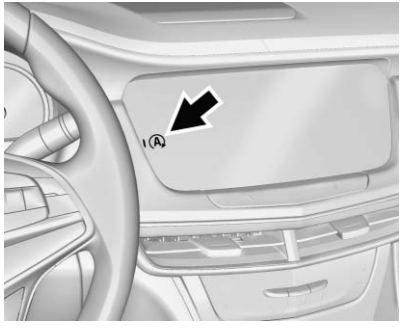

The automatic engine stop/start function can be disabled by touching Ⓐ on the touchscreen. The indicator next to the switch will come on when the system is active.

Retained Accessory Power (RAP)

These vehicle accessories can be used for up to 10 minutes after the engine is turned off:

- Audio System
- Power Windows
- Sunroof (if equipped)

Power to the audio system will work up to 10 minutes or until the driver door is opened. Power to the windows or sunroof will work up to 10 minutes or until any door is opened.

Engine Coolant Heater

Vehicles with the engine coolant heater can use this option in cold weather conditions at or below −18 °C (0 °F) for easier starting and better fuel economy during engine warm-up. Plug in the coolant heater at least four hours before starting your vehicle. An internal thermostat in the plug-end of the cord may exist which will prevent engine coolant heater operation at temperatures above −18 °C (0 °F).

To Use the Engine Coolant Heater

1. Turn off the engine.
2. Open the hood and unwrap the electrical cord. The cord is clipped to the diagonal brace on the passenger side of the engine compartment.

   Check the heater cord for damage. If it is damaged, do not use it. See your dealer for a replacement. Inspect the cord for damage yearly.
3. Plug it into a normal, grounded 110-volt AC outlet.

⚠ Warning

Improper use of the heater cord or an extension cord can damage the cord and may result in overheating and fire.

- Plug the cord into a three-prong electrical utility receptacle that is protected by a ground fault detection function. An ungrounded outlet could cause an electric shock.
- Use a weatherproof, heavy-duty, 15 amp-rated extension cord if needed. Failure to use the recommended extension cord in good operating condition, or using a damaged heater or extension cord, could make

(Continued)

Warning (Continued)

it overheat and cause a fire, property damage, electric shock, and injury.

- Do not operate the vehicle with the heater cord permanently attached to the vehicle. Possible heater cord and thermostat damage could occur.
- While in use, do not let the heater cord touch vehicle parts or sharp edges. Never close the hood on the heater cord.
- Before starting the vehicle, unplug the cord, reattach the cover to the plug, and securely fasten the cord. Keep the cord away from any moving parts.

4. Before starting the engine, be sure to unplug and store the cord as it was before to keep it away from moving engine parts. If you do not, it could be damaged.

Contact your dealer for information on how long to use the heater in your particular area.

Shifting Into Park

To shift into P (Park):

1. Hold the brake pedal down and set the parking brake.

   See *Electric Parking Brake* ⇨ *214*.

2. Move the shift lever into P (Park) by holding in the button on the shift lever and pushing the lever all the way toward the front of the vehicle.
3. Turn the ignition off.
4. Take the Remote Keyless Entry (RKE) transmitter with you.

Leaving the Vehicle with the Engine Running

⚠ Warning

It can be dangerous to leave the vehicle with the engine running. It could overheat and catch fire.

It is dangerous to get out of the vehicle if the shift lever is not fully in P (Park) with the parking brake firmly set. The vehicle can roll.

Do not leave the vehicle when the engine is running. If you have left the engine running, the vehicle can move suddenly. You or others could be injured. To be sure the vehicle will not move, even when you are on fairly level ground, always set the parking brake and move the shift lever to P (Park). See *Shifting Into Park* ⇨ *207*. If you are towing a trailer, see *Driving Characteristics and Towing Tips* ⇨ *255*.

If you have to leave the vehicle with the engine running, the vehicle must be in P (Park) and the parking brake set. After shifting into P (Park), try to move the shift lever out without first pushing the button on the shift lever.

If you can, the shift lever was not fully locked into P (Park).

Torque Lock

Torque lock is when the weight of the vehicle puts too much force on the parking pawl in the transmission. This happens when parking on a hill and shifting the transmission into P (Park) is not done properly and then it is difficult to shift out of P (Park). To prevent torque lock, set the parking brake and then shift into P (Park). To find out how, see "Shifting Into Park" listed previously.

If torque lock does occur, the vehicle may need to be pushed uphill by another vehicle to relieve the parking pawl pressure, so you can shift out of P (Park).

Shifting out of Park

This vehicle is equipped with an electronic shift lock release system. The shift lock release is designed to prevent movement of the shift lever out of P (Park), unless the ignition is in ON/RUN and the brake pedal is applied.

The shift lock release is always functional except in the case of an uncharged or low voltage (less than 9 volt) battery.

If the vehicle has an uncharged battery or a battery with low voltage, try charging or jump starting the battery. See *Jump Starting - North America* ⇨ *327* for more information.

To shift out of P (Park):

1. Apply the brake pedal.
2. Release the parking brake. See *Electric Parking Brake* ⇨ *214*.
3. Press the shift lever button.
4. Move the shift lever.

If unable to shift out of P (Park):

1. Fully release the shift lever button.
2. While holding down the brake pedal, press the shift lever button again.
3. Move the shift lever.

If the shift lever will not move from P (Park), consult your dealer or a professional towing service.

Parking over Things That Burn

⚠ Warning

Things that can burn could touch hot exhaust parts under the vehicle and ignite. Do not park over papers, leaves, dry grass, or other things that can burn.

Engine Exhaust

⚠ Warning

Engine exhaust contains carbon monoxide (CO), which cannot be seen or smelled. Exposure to CO can cause unconsciousness and even death.

Exhaust may enter the vehicle if:

- The vehicle idles in areas with poor ventilation (parking garages, tunnels, deep snow that may block underbody airflow or tail pipes).
- The exhaust smells or sounds strange or different.
- The exhaust system leaks due to corrosion or damage.
- The vehicle exhaust system has been modified, damaged, or improperly repaired.

(Continued)

Warning (Continued)

- There are holes or openings in the vehicle body from damage or aftermarket modifications that are not completely sealed.

If unusual fumes are detected or if it is suspected that exhaust is coming into the vehicle:

- Drive it only with the windows completely down.
- Have the vehicle repaired immediately.

Never park the vehicle with the engine running in an enclosed area such as a garage or a building that has no fresh air ventilation.

Running the Vehicle While Parked

It is better not to park with the engine running.

If the vehicle is left with the engine running, follow the proper steps to be sure the vehicle will not move. See *Shifting Into Park* ⇨ *207* and *Engine Exhaust* ⇨ *209*.

If parking on a hill and pulling a trailer, see *Driving Characteristics and Towing Tips* ⇨ *255*.

Automatic Transmission

There are several different positions for the shift lever.

P : This position locks the rear wheels. Use this position when starting the engine because the vehicle cannot move easily.

⚠ Warning

It is dangerous to get out of the vehicle if the shift lever is not fully in P (Park) with the parking brake firmly set. The vehicle can roll.

Do not leave the vehicle when the engine is running unless you have to. If you have left the engine running, the vehicle can move suddenly. You or others could be injured. To be sure the vehicle will not move, even when you are on fairly level ground, always set the parking brake and move the shift lever to P (Park). See *Shifting Into Park* ⇨ *207*.
If you are pulling a trailer, see *Driving Characteristics and Towing Tips* ⇨ *255*.

Make sure the shift lever is fully in P (Park) before starting the engine. The vehicle has an electronic shift lock release system. Fully apply the regular brakes first and then press the shift lever button before shifting from P (Park) when the ignition is in

ON/RUN. If you cannot shift out of P (Park), ease pressure on the shift lever and push the shift lever all the way into P (Park) as you maintain brake application. Then press the shift lever button and move the shift lever into another gear. See *Shifting out of Park* ⇨ *208*.

Caution

Shifting to R (Reverse) while the vehicle is moving forward could damage the transmission. The repairs would not be covered by the vehicle warranty. Shift to R (Reverse) only after the vehicle is stopped.

R : Use this gear to back up.

At low vehicle speeds, R (Reverse) can be used to rock the vehicle back and forth to get out of snow, ice, or sand without damaging the transmission. See *If the Vehicle Is Stuck* ⇨ *198*.

N : In this position, the engine does not connect with the wheels. To restart when the vehicle is already moving, use N (Neutral) only. You can also use N (Neutral) when the vehicle is being towed.

⚠ Warning

Shifting into a drive gear while the engine is running at high speed is dangerous. Unless your foot is firmly on the brake pedal, the vehicle could move very rapidly. You could lose control and hit people or objects. Do not shift into a drive gear while the engine is running at high speed.

Caution

Shifting out of P (Park) or N (Neutral) with the engine running at high speed may damage the transmission. The repairs would not be covered by the vehicle warranty. Be sure the engine is not running at high speed when shifting the vehicle.

D : This position is for normal driving. It provides the best fuel economy. If you need more power for passing, and you are:

- Going less than 55 km/h (35 mph), push the accelerator pedal about halfway down.
- Going about 55 km/h (35 mph) or more, push the accelerator all the way down.

  The transmission will shift down to a lower gear and have more power.

Downshifting the transmission in slippery road conditions could result in skidding. See “Skidding” under *Loss of Control* ⇨ *195*.

M : This mode can be entered by moving the shift lever from D (Drive) to M (Manual Mode). M (Manual Mode) allows the driver to select gears appropriate for current driving conditions. M (Manual Mode) can be exited by returning the shift lever to D (Drive). See *Manual Mode* ⇨ *212*.

Caution

Spinning the tires or holding the vehicle in one place on a hill using only the accelerator pedal may damage the transmission. The repair will not be covered by the vehicle warranty. If you are stuck, do not spin the tires. When stopping on a hill, use the brakes to hold the vehicle in place.

While in Sport Mode, the vehicle monitors driving behavior and automatically enables performance shift features when spirited driving is detected. These features maintain lower transmission gears to increase available engine braking and improve acceleration response. The vehicle will exit these features and return to normal operation after a short period when no spirited driving is detected. See *Driver Mode Control* ⇨ *219*.

Manual Mode

Tap Shift

Caution

Driving with the engine at a high rpm without upshifting while using Tap Shift, could damage the vehicle. Always upshift when necessary while using Tap Shift.

Vehicles with Tap Shift have controls on the back of the steering wheel to manually shift the automatic transmission.

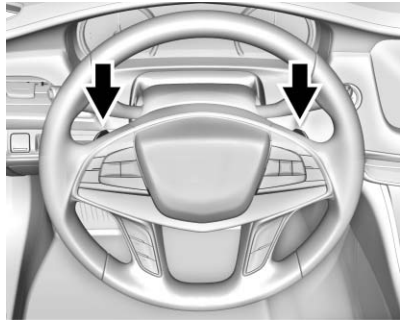

To enter Permanent Tap Shift Mode:

1. Move the shift lever from D (Drive) to M (Manual Mode). While in Tap Shift Mode, the M of the PRNDM section of the instrument cluster will become highlighted, and the current gear is indicated.
2. Tap the left control toward the driver to downshift, and the right control toward the driver to upshift. To shift to the lowest available gear, press and hold the left control.
3. To exit, move the shift lever back to D (Drive).

With the shift lever in D (Drive) and not in Permanent Tap Shift Mode, the Tap Shift controls will activate a temporary tap manual shift mode, allowing the transmission to be manually shifted. The vehicle exits Temporary Tap Shift Mode after the accelerator pedal is steady for six seconds. Temporary Tap Shift Mode holds a gear longer without exiting when coasting, to provide powertrain braking. The Temporary

Tap Shift Mode can also be deactivated by holding the right upshift control briefly.

While using Tap Shift, the vehicle will have firmer, quicker shifting. You can use this for sport driving or when climbing or descending hills, to stay in gear longer, or to downshift for more power or engine braking.

The transmission will only allow you to shift into gears appropriate for the vehicle speed and engine revolutions per minute (rpm). The transmission will not downshift if the engine rpm is too high in the next lower gear, or upshift to the next higher gear when the maximum engine rpm is reached.

If shifting is prevented for any reason, a SHIFT DENIED message will be displayed in the instrument cluster. See *Transmission Messages* ⇨ *156*.

When accelerating the vehicle from a stop in snowy and icy conditions, it is suggested to shift into second gear. A higher gear allows the vehicle to gain more traction on slippery surfaces.

Drive Systems

All-Wheel Drive

Vehicles with this feature always send engine power to all four wheels. It is fully automatic, and adjusts itself as needed for road conditions.

Brakes

Antilock Brake System (ABS)

This vehicle has ABS, an advanced electronic braking system that helps prevent a braking skid.

When the vehicle begins to drive away, ABS checks itself.
A momentary motor or clicking noise might be heard while this test is going on, and it might even be noticed that the brake pedal moves a little. This is normal.

If there is a problem with ABS, this warning light stays on. See *Antilock Brake System (ABS) Warning Light* ⇨ *135*.

If driving safely on a wet road and it becomes necessary to slam on the brakes and continue braking to avoid a sudden obstacle, a computer senses the wheels are slowing down. If one of the wheels is about to stop rolling, the computer will separately work the brakes at each wheel.

ABS can change the brake pressure to each wheel, as required, faster than any driver could. This can help you steer around the obstacle while braking hard.

As the brakes are applied, the computer keeps receiving updates on wheel speed and controls braking pressure accordingly.

Remember: ABS does not change the time needed to get a foot up to the brake pedal or always decrease stopping distance. If you get too close to the vehicle in front of you, there will not be enough time to apply the brakes if that vehicle suddenly slows or stops. Always leave enough room up ahead to stop, even with ABS.

Using ABS

Do not pump the brakes. Just hold the brake pedal down firmly and let ABS work. You may hear the ABS pump or motor operating and feel the brake pedal pulsate. This is normal.

Braking in Emergencies

ABS allows you to steer and brake at the same time. In many emergencies, steering can help more than even the very best braking.

Electric Parking Brake

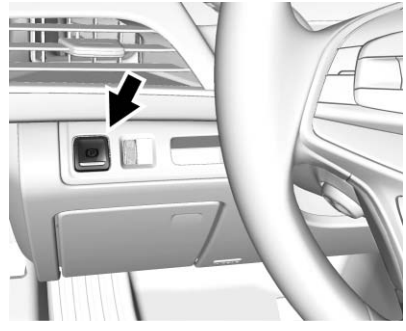

The vehicle has an Electric Parking Brake (EPB). The EPB can always be activated, even if the ignition is off. To prevent draining the battery, avoid repeated cycles of the EPB system when the engine is not running.

The system has a red parking brake status light and an amber parking brake warning light. See *Electric Parking Brake Light* ⇨ *134* and *Service Electric Parking Brake Light* ⇨ *134*. There are also parking brake-related Driver Information Center (DIC) messages. See *Brake System Messages* ⇨ *147*. In case of insufficient electrical power, the EPB cannot be applied or released.

Before leaving the vehicle, check the red parking brake status light to ensure that the parking brake is applied.

EPB Apply

To apply the EPB:

1. Be sure the vehicle is at a complete stop.
2. Press the EPB switch momentarily.

The red parking brake status light will flash and then stay on once the EPB is fully applied. If the red parking brake status light flashes continuously, then the EPB is only partially applied or there is a problem with the EPB. A DIC message will display. Release the EPB and try to apply it again. If the light does not come on, or keeps flashing, have the vehicle serviced. Do not drive the vehicle if the red parking brake status light is flashing. See your dealer. See *Electric Parking Brake Light* ⇨ *134*.

If the amber parking brake warning light is on, press the EPB switch and hold it. Continue to hold the switch until the red parking brake status light remains on. If the amber parking brake warning light remains on, see your dealer.

If the EPB is applied while the vehicle is moving, the vehicle will decelerate as long as the switch is pressed. If the switch is pressed until the vehicle comes to a stop, the EPB will remain applied.

The vehicle may automatically apply the EPB in some situations when the vehicle is not moving. This is normal, and is done to periodically check the correct operation of the EPB system.

If the EPB fails to apply, block the rear wheels to prevent vehicle movement.

EPB Release

To release the EPB:

1. Place the ignition in the ACC/ACCESSORY or ON/RUN mode.
2. Apply and hold the brake pedal.
3. Push down momentarily on the EPB switch.

The EPB is released when the red parking brake status light is off.

If the amber parking brake warning light is on, release the EPB by pushing down on the EPB switch and holding it down. Continue to hold the switch until the red parking

brake status light is off. If either light stays on after release is attempted, see your dealer.

Caution
Driving with the parking brake on can overheat the brake system and cause premature wear or damage to brake system parts. Make sure that the parking brake is fully released and the brake warning light is off before driving.

Automatic EPB Release

The EPB will automatically release if the vehicle is running, placed into gear, and an attempt is made to drive away. Avoid rapid acceleration when the EPB is applied, to preserve parking brake lining life.

If parking on a hill, or if the vehicle is pulling a trailer, see *Driving Characteristics and Towing Tips* ⇨ *255*.

Brake Assist

This vehicle has a brake assist feature designed to assist the driver in stopping or decreasing vehicle speed in emergency driving conditions. This feature uses the stability system hydraulic brake control module to supplement the power brake system under conditions where the driver has quickly and forcefully applied the brake pedal in an attempt to quickly stop or slow down the vehicle. The stability system hydraulic brake control module increases brake pressure at each corner of the vehicle until the ABS activates. Minor brake pedal pulsation or pedal movement during this time is normal and the driver should continue to apply the brake pedal as the driving situation dictates. The brake assist feature will automatically disengage when the brake pedal is released or brake pedal pressure is quickly decreased.

Hill Start Assist (HSA)

HSA may automatically activate when the vehicle is stopped on a hill and Automatic Vehicle Hold (AVH) is not enabled. This feature is designed to prevent the vehicle from rolling, either forward or rearward, during vehicle drive off. During the transition from releasing the brake pedal to accelerating to drive off on a hill, HSA holds the braking pressure to prevent rolling. HSA will not activate if the vehicle is in a drive gear and facing downhill or if the vehicle is facing uphill and in R (Reverse).

Automatic Vehicle Hold (AVH)

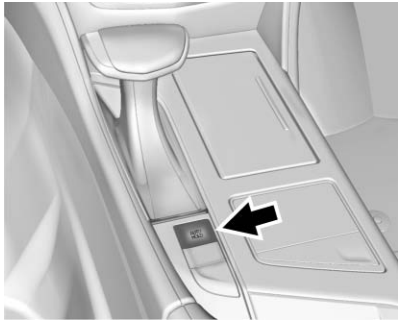

AVH can be turned on by pressing AVH with the driver safety belt fastened, the driver door closed, and the engine running. The AVH indicator will come on.

This feature will activate when the vehicle is stopped to prevent it from moving. After the brake pedal has been released and before the accelerator pedal has been pressed, AVH uses braking pressure to hold the vehicle stationary. In addition, the ABS pump motor may activate to build brake pressure to maintain the vehicle at a standstill if necessary.

If AVH is holding the vehicle, the AVH indicator will change to green. Once AVH is active it will hold the vehicle for a defined time period then engage the parking brake. While AVH is holding the vehicle, the parking brake will engage if the driver door is opened or the driver safety belt is unfastened.

Ride Control Systems

Traction Control/ Electronic Stability Control

System Operation

The vehicle has a Traction Control System (TCS) and StabiliTrak®, an electronic stability control system. These systems help limit wheel spin and assist the driver in maintaining control, especially on slippery road conditions.

TCS activates if it senses that any of the drive wheels are spinning or beginning to lose traction. When this happens, TCS applies the brakes to the spinning wheels and reduces engine power to limit wheel spin.

StabiliTrak activates when the vehicle senses a difference between the intended path and the direction the vehicle is actually traveling. StabiliTrak selectively applies braking pressure to any one of the

vehicle wheel brakes to assist the driver in keeping the vehicle on the intended path.

If cruise control is being used and traction control or StabiliTrak begins to limit wheel spin, cruise control will disengage. Cruise control may be turned back on when road conditions allow.

Both systems come on automatically when the vehicle is started and begins to move. The systems may be heard or felt while they are operating or while performing diagnostic checks. This is normal and does not mean there is a problem with the vehicle.

It is recommended to leave both systems on for normal driving conditions, but it may be necessary to turn TCS off if the vehicle gets stuck in sand, mud, ice, or snow. See *If the Vehicle Is Stuck* ⇨ *198* and “Turning the Systems Off and On” later in this section.

The indicator light for both systems is in the instrument cluster. This light will:

- Flash when TCS is limiting wheel spin.
- Flash when StabiliTrak is activated.
- Turn on and stay on when either system is not working.

If either system fails to turn on or to activate, a message displays in the Driver Information Center (DIC), and comes on and stays on to indicate that the system is inactive and is not assisting the driver in maintaining control. The vehicle is safe to drive, but driving should be adjusted accordingly.

If comes on and stays on:

1. Stop the vehicle.
2. Turn the engine off and wait 15 seconds.
3. Start the engine.
4. Drive the vehicle.

If comes on and stays on, the vehicle may need more time to diagnose the problem. If the condition persists, see your dealer.

Turning the Systems Off and On

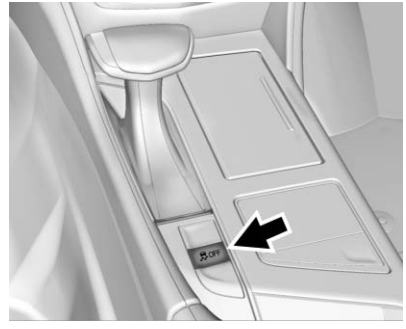

Caution

Do not repeatedly brake or accelerate heavily when TCS is off. The vehicle driveline could be damaged.

To turn off only TCS, press and release . The Traction Off light displays in the instrument cluster and the appropriate DIC message displays. See *Ride Control System Messages* ⇨ *154*.

To turn TCS on again, press and release . The Traction Off light displayed in the instrument cluster will turn off.

To turn off both TCS and StabiliTrak, press and hold until the Traction Off light and StabiliTrak OFF light come on and stay on in the instrument cluster. The appropriate DIC message displays. See *Ride Control System Messages* ⇨ *154*.

To turn TCS and StabiliTrak on again, press and release . The Traction Off light and StabiliTrak OFF light in the instrument cluster turn off.

Adding accessories can affect vehicle performance. See *Accessories and Modifications* ⇨ *262*.

Driver Mode Control

Driver Mode Control attempts to add a sportier feel, provide a more comfortable ride, or assist in different weather conditions or terrain. This system simultaneously changes the software calibration of various sub-systems. Depending on the option package, available features, and mode selected, the suspension, steering, and powertrain will change calibrations to achieve the desired mode characteristics.

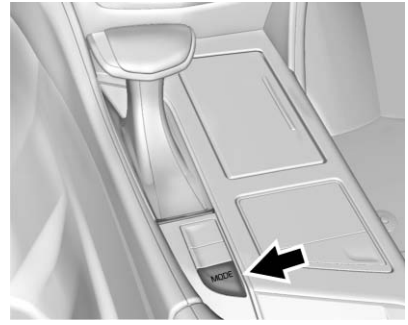

Press and release MODE on the center console to activate the mode menu in the instrument cluster. The first press of the button will show the current mode. Subsequent presses will scroll through the available modes. Select a new setting whenever driving conditions change. The following modes are available:

Tour Mode

Use for normal city and highway driving to provide a smooth, soft ride.

If the vehicle is equipped with AWD, the Tour mode is in between the Sport and the Snow/Ice modes for a more balanced feel.

Sport Mode

Use where road conditions or personal preference demand a more controlled response.

When selected, the Sport mode indicator will display in the Driver Information Center (DIC).

When in Sport mode, the vehicle will shift automatically but may hold a lower gear longer than it would in the normal driving mode based on braking, throttle input, and vehicle lateral acceleration. See *Automatic Transmission* ⇨ *210*. The steering, including Active Rear Steer (if equipped), will change to provide more precise control.

If the vehicle is equipped with AWD, the Sport mode sends more torque to the rear wheels.

Snow/Ice Mode

Use when more traction is needed during slippery conditions. Snow/Ice mode will use a different accelerator pedal map in order to optimize traction on slippery surfaces.

When selected, the Snow/Ice mode indicator will display in the DIC.

This feature is not intended for use when the vehicle is stuck in sand, mud, ice, snow, or gravel. If the vehicle becomes stuck, see *If the Vehicle Is Stuck* ⇨ *198*.

If the vehicle is equipped with AWD, the Snow/Ice mode will provide more torque to the front wheels.

Cruise Control

⚠ Warning

Cruise control can be dangerous where you cannot drive safely at a steady speed. Do not use cruise control on winding roads or in heavy traffic.

Cruise control can be dangerous on slippery roads. On such roads, fast changes in tire traction can cause excessive wheel slip, and you could lose control. Do not use cruise control on slippery roads.

With cruise control, a speed of about 40 km/h (25 mph) or more can be maintained without keeping your foot on the accelerator. Cruise control does not work at speeds below about 40 km/h (25 mph).

If the Traction Control/electronic stability control system begins to limit wheel spin while using cruise control, the cruise control

automatically disengages. See *Traction Control/Electronic Stability Control* ⇨ *217*. If a collision alert occurs when cruise control is activated, cruise control is disengaged. See *Forward Collision Alert (FCA) System* ⇨ *237*. When road conditions allow cruise control to be safely used, it can be turned back on.

Cruise control will disengage if either TCS or StabiliTrak is turned off.

If the brakes are applied, cruise control disengages.

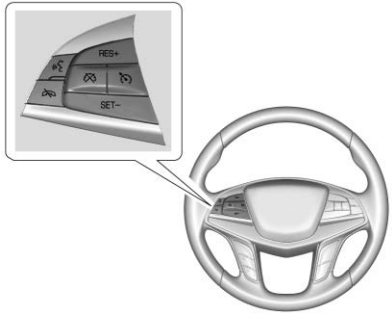

: Press to turn the system on and off. A white indicator appears in the instrument cluster when cruise is turned on.

RES+ : If there is a set speed in memory, press briefly to resume to that speed or press and hold to accelerate. If the cruise control is already active, use to increase vehicle speed. To increase speed by 1 km/h (1 mph), press RES+ to the first detent. To increase speed to the next 5 km/h (5 mph) mark on the speedometer, press RES+ to the second detent.

SET− : Press briefly to set the speed and activate cruise control. If the cruise control is already active, use to decrease vehicle speed. To decrease speed by 1 km/h (1 mph), press SET− to the first detent. To decrease speed to the next 5 km/h (5 mph) mark on the speedometer, press SET− to the second detent.

: Press to disengage cruise control without erasing the set speed from memory.

Setting Cruise Control

If is on when not in use, SET− or RES+ could get pressed and go into cruise when not desired. Keep off when cruise is not being used.

1. Press .
2. Get up to the desired speed.
3. Press and release SET−. The desired set speed briefly appears in the instrument cluster.
4. Remove your foot from the accelerator.

When the cruise control has been set to the desired speed, a green cruise control indicator appears on the instrument cluster and a cruise set speed message appears on the Head-Up Display (HUD), if equipped.

Resuming a Set Speed

If the cruise control is set at a desired speed and then the brakes are applied or is pressed, the cruise control is disengaged without erasing the set speed from memory.

Once the vehicle speed reaches about 40 km/h (25 mph) or more, press RES+ briefly. The vehicle returns to the previous set speed.

Increasing Speed While Using Cruise Control

If the cruise control system is already activated:

- Press and hold RES+ until the desired speed is reached, then release it.
- To increase vehicle speed in small increments, briefly press RES+ to the first detent. For each press, the vehicle goes about 1 km/h (1 mph) faster.
- To increase vehicle speed in larger increments, briefly press RES+ to the second detent. For each press, the vehicle speed increases to the next 5 km/h (5 mph) mark on the speedometer.

The speedometer reading can be displayed in either English or metric units. See *Instrument Cluster (Uplevel)* ⇨ *121* or *Instrument Cluster (Base Level)* ⇨ *118*. The increment value used depends on the units displayed.

Reducing Speed While Using Cruise Control

If the cruise control system is already activated:

- Press and hold SET− until the desired lower speed is reached, then release it.
- To decrease the vehicle speed in small increments, briefly press SET− to the first detent. For each press, the vehicle goes about 1 km/h (1 mph) slower.
- To decrease the vehicle speed in larger increments, briefly press SET− to the second detent. For each press, the vehicle speed decreases to the next 5 km/h (5 mph) mark on the speedometer.

The cruise control system may automatically brake to slow the vehicle down.

The speedometer reading can be displayed in either English or metric units. See *Instrument Cluster (Uplevel)* ⇨ *121* or *Instrument Cluster (Base Level)* ⇨ *118*. The increment value used depends on the units displayed.

Passing Another Vehicle While Using Cruise Control

Use the accelerator pedal to increase the vehicle speed. When you take your foot off the pedal, the vehicle will slow down to the previous set cruise speed.

While pressing the accelerator pedal or shortly following the release to override cruise, briefly applying SET − will result in cruise set to the current vehicle speed.

Using Cruise Control on Hills

How well the cruise control will work on hills depends upon the vehicle speed, load, and the steepness of the hills. When going up steep hills, you might have to step on the

accelerator pedal to maintain your speed. When going downhill, the cruise control system may automatically brake to slow the vehicle down. Also, you may have to brake or shift to a lower gear to keep your speed down. If the brake pedal is applied, cruise control disengages.

Ending Cruise Control

There are four ways to end cruise control:

- Step lightly on the brake pedal.
- Press .
- Shift the transmission to N (Neutral).
- Press .

Erasing Speed Memory

The cruise control set speed is erased from memory if is pressed or if the ignition is turned off.

Adaptive Cruise Control

If equipped with Adaptive Cruise Control (ACC), it allows the driver to select the cruise control set speed and following gap. Read this entire section before using this system. The following gap is the following time between your vehicle and a vehicle detected directly ahead in your path, moving in the same direction. If no vehicle is detected in your path, ACC works like regular cruise control. ACC uses camera and radar sensors. See *Radio Frequency Statement* ⇨ *371*.

If a vehicle is detected in your path, ACC can apply acceleration or limited, moderate braking to maintain the selected following gap. To disengage ACC, apply the brake. If ACC is controlling your vehicle speed when the Traction Control System (TCS) or StabiliTrak® electronic stability control system activates, the ACC may automatically disengage. See *Traction Control/Electronic Stability Control* ⇨ *217*. When road conditions allow ACC to be safely used, ACC can be turned back on.

ACC will not engage if the TCS or StabiliTrak electronic stability control system is disabled.

⚠ Warning

ACC has limited braking ability and may not have time to slow the vehicle down enough to avoid a collision with another vehicle you are following. This can occur when vehicles suddenly slow or stop ahead, or enter your lane. Also see “Alerting the Driver” in this section. Complete attention is always required while driving and you should be ready to take action and apply the brakes. See *Defensive Driving* ⇨ *193*.

⚠ Warning

ACC will not detect or brake for children, pedestrians, animals, or other objects.

Do not use ACC when:

- On winding and hilly roads or when the sensors are blocked by snow, ice, or dirt. The system may not detect a vehicle ahead. Keep the entire front of the vehicle clean.
- Visibility is low, such as in fog, rain, or snow conditions. ACC performance is limited under these conditions.
- On slippery roads where fast changes in tire traction can cause excessive wheel slip.

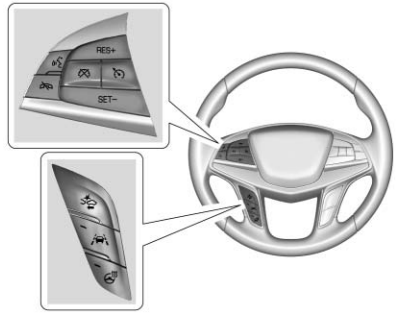

: Press to turn the system on or off. The indicator turns white on the instrument cluster when ACC is turned on.

RES+ : Press briefly to resume the previous set speed or to increase vehicle speed if ACC is already activated. To increase speed by 1 km/h (1 mph), press RES+ to the first detent. To increase speed to the next 5 km/h (5 mph) mark on the speedometer, press RES+ to the second detent.

SET– : Press briefly to set the speed and activate ACC or to decrease vehicle speed if ACC is already activated. To decrease speed by 1 km/h (1 mph), press SET − to the first detent. To decrease speed to the next 5 km/h (5 mph) mark on the speedometer, press SET− to the second detent.

: Press to disengage ACC without erasing the selected set speed.

: Press to select a following gap time (or distance) setting for ACC of Far, Medium, or Near.

Setting Adaptive Cruise Control

If is on when not in use, it could get pressed and go into cruise when not desired. Keep off when cruise is not being used.

Select the set speed desired for cruise. This is the vehicle speed when no vehicle is detected in its path.

ACC will not set at a speed less than 25 km/h (16 mph), although it can be resumed when driving at lower speeds.

To set ACC:

1. Press .
2. Get up to the desired speed.
3. Press and release SET–.
4. Remove your foot from the accelerator.

After ACC is set, it may immediately apply the brakes if a vehicle ahead is detected closer than the selected following gap.

The ACC indicator displays on the instrument cluster and Head-Up Display (HUD). When ACC is active, the indicator will be lit green.

Be mindful of speed limits, surrounding traffic speeds, and weather conditions when selecting the set speed.

Resuming a Set Speed

If ACC is set at a desired speed and then the brakes are applied, ACC is disengaged without erasing the set speed from memory.

To begin using ACC again, press RES+ up briefly. The vehicle returns to the previous set speed.

Increasing Speed While ACC Is at a Set Speed

If ACC is already activated, do one of the following:

- Use the accelerator to get to the higher speed. Press SET–. Release the control and the accelerator pedal. The vehicle will now cruise at the higher speed.

  When the accelerator pedal is pressed, ACC will not brake because it is overridden. A warning message will appear on the Driver Information Center (DIC) and HUD. See *Cruise Control Messages* ⇨ *148*.

- Press and hold RES+ until the desired set speed appears on the display, then release it.
- To increase vehicle speed in small increments, press RES+ to the first detent. For each press, the vehicle goes 1 km/h (1 mph) faster.
- To increase vehicle speed in larger increments, press RES+ to the second detent. For each press, the vehicle speed increases to the next 5 km/h (5 mph) mark on the speedometer.

When it is determined that there is no vehicle ahead or the vehicle ahead is beyond the selected following gap, then the vehicle speed will increase to the set speed.

The speedometer reading can be displayed in either English or metric units. See *Instrument Cluster (Uplevel)* ⇨ *121* or *Instrument Cluster (Base Level)* ⇨ *118*. The increment value used depends on the units displayed.

Reducing Speed While ACC Is at a Set Speed

If ACC is already activated, do one of the following:

- Use the brake to get to the desired lower speed. Press SET– and release the accelerator pedal. The vehicle will now cruise at the lower speed.
- Press and hold SET– until the desired lower speed is reached, then release it.
- To decrease the vehicle speed in smaller increments, press SET− to the first detent. For each press, the vehicle goes about 1 km/h (1 mph) slower.
- To decrease the vehicle speed in larger increments, press SET− to the second detent. For each press, the vehicle speed decreases to the next 5 km/h (5 mph) mark on the speedometer.

The speedometer reading can be displayed in either English or metric units. See *Instrument Cluster (Uplevel)* ⇨ *121* or *Instrument Cluster (Base Level)* ⇨ *118*. The increment value used depends on the units displayed.

Selecting the Follow Distance Gap

When a slower moving vehicle is detected ahead within the selected following gap, ACC will adjust the vehicle's speed and attempt to maintain the follow distance gap selected.

Press on the steering wheel to adjust the following gap. Each press cycles the gap button through three settings: Far, Medium, or Near.

When pressed, the current gap setting displays briefly on the instrument cluster and HUD. The gap setting will be maintained until it is changed.

Since each gap setting corresponds to a following time (Far, Medium, or Near), the following distance will vary based on vehicle speed. The faster the vehicle speed, the further back your vehicle will follow a vehicle detected ahead. Consider traffic and weather conditions when selecting the following gap. The range of selectable gaps may not be appropriate for all drivers and driving conditions.

Changing the gap setting automatically changes the alert timing sensitivity (Far, Medium, or Near) for the Forward Collision Alert (FCA) feature. See *Forward Collision Alert (FCA) System* ⇨ *237*.

Alerting the Driver

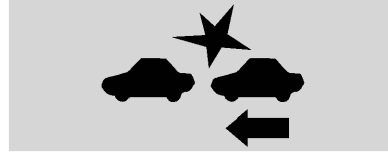

If ACC is engaged, driver action may be required when ACC cannot apply sufficient braking because of approaching a vehicle too rapidly.

When this condition occurs, the collision alert symbol on the HUD will flash on the windshield. Either

eight beeps will sound from the front, or both sides of the Safety Alert Seat will pulse five times. See "Collision/Detection Systems" under *Vehicle Personalization* ⇨ *157*.

See *Defensive Driving* ⇨ *193*.

Approaching and Following a Vehicle

The vehicle ahead indicator is in the instrument cluster and HUD display.

The vehicle ahead indicator only displays when a vehicle is detected in your vehicle's path moving in the same direction.

If this symbol is not displaying, ACC will not respond to or brake for vehicles ahead.

ACC automatically slows the vehicle down and adjusts vehicle speed to follow the vehicle in front at the selected follow gap. The vehicle speed increases or decreases to follow the vehicle in front of you, but will not exceed the set speed. It may apply limited braking, if necessary. When braking is active, the brake lights will come on. The automatic braking may feel or sound different than if the brakes were applied manually. This is normal.

Stationary or Very Slow-Moving Objects

⚠ Warning

Adaptive Cruise Control (ACC) may not detect and react to stopped or slow-moving vehicles ahead of you. For example, the system may not brake for a vehicle it has never detected moving. This can occur in stop-and-go traffic or when a vehicle suddenly appears due to a vehicle ahead changing lanes. Your vehicle may not stop and could cause a crash. Use caution when using ACC. Your complete attention is always required while

(Continued)

Warning (Continued)

driving and you should be ready to take action and apply the brakes.

ACC Automatically Disengages

ACC may automatically disengage and the driver will need to manually apply the brakes to slow the vehicle when:

- The sensors are blocked.
- The Traction Control System (TCS) or electronic stability control system has activated or been disabled.
- No traffic or other objects are being detected.
- There is a fault in the system.

The ACC active symbol will not be displayed when ACC is no longer active.

Notification to Resume ACC

ACC will maintain a follow gap behind a detected vehicle and slow your vehicle to a stop behind that vehicle.

If the stopped vehicle ahead has driven away and ACC has not resumed, the vehicle ahead indicator will flash as a reminder to check traffic ahead before proceeding. In addition, the left and right sides of the Safety Alert Seat will pulse three times, or three beeps will sound. See ”Alert Type” and “Go Notifier” in “Collision/ Detection Systems” under *Vehicle Personalization* ⇨ *157*.

When the vehicle ahead drives away, ACC resumes automatically if the stop was brief. If necessary, press RES+ or the accelerator pedal to resume cruise control. If stopped for more than two minutes or if the driver door is opened and the driver safety belt is unbuckled, the ACC automatically applies the Electric Parking Brake (EPB) to hold the vehicle. The Electric Parking Brake status light will turn on. See *Electric Parking Brake* ⇨ *214*. To resume ACC and release the EPB, press the accelerator pedal.

A DIC warning message may display indicating to shift to P (Park) before exiting the vehicle. See *Vehicle Messages* ⇨ *146*.

⚠ Warning

If ACC has stopped the vehicle, and if ACC is disengaged, turned off, or canceled, the vehicle will no longer be held at a stop. The vehicle can move. When ACC is holding the vehicle at a stop, always be prepared to manually apply the brakes.

⚠ Warning

Leaving the vehicle without placing it in P (Park) can be dangerous. Do not leave the vehicle while it is being held at a stop by ACC. Always place the

(Continued)

Warning (Continued)

vehicle in P (Park) and turn off the ignition before leaving the vehicle.

ACC Override

If using the accelerator pedal while ACC is active, a DIC warning message will indicate that automatic braking will not occur. See *Vehicle Messages* ⇨ *146*. ACC will resume operation when the accelerator pedal is not being pressed.

⚠ Warning

The ACC will not automatically apply the brakes if your foot is resting on the accelerator pedal. You could crash into a vehicle ahead of you.

Curves in the Road

⚠ Warning

On curves, ACC may not detect a vehicle ahead in your lane. You could be startled if the vehicle accelerates up to the set speed, especially when following a vehicle exiting or entering exit ramps. You could lose control of the vehicle or crash. Do not use ACC while driving on an entrance or exit ramp. Always be ready to use the brakes if necessary.

⚠ Warning

On curves, ACC may respond to a vehicle in another lane, or may not have time to react to a vehicle in your lane. You could crash into a vehicle ahead of you, or lose control of your vehicle. Give extra attention in curves and be ready to use the brakes if necessary. Select an appropriate speed while driving in curves.

ACC may operate differently in a sharp curve. It may reduce the vehicle speed if the curve is too sharp.

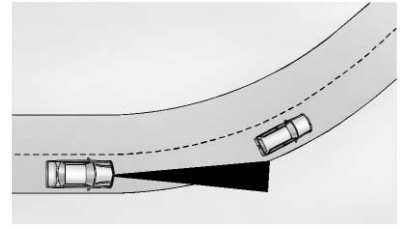

When following a vehicle and entering a curve, ACC may not detect the vehicle ahead and accelerate to the set speed. When this happens, the vehicle ahead indicator will not appear.

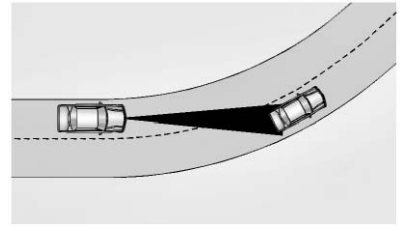

ACC may detect a vehicle that is not in your lane and apply the brakes.

ACC may occasionally provide an alert and/or braking that is considered unnecessary. It could respond to vehicles in different lanes, signs, guardrails, and other stationary objects when entering or exiting a curve. This is normal operation. The vehicle does not need service.

Other Vehicle Lane Changes

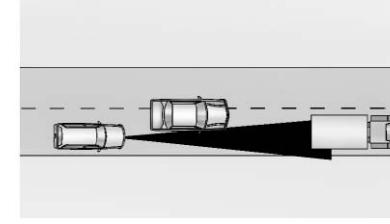

ACC will not detect a vehicle ahead until it is completely in the lane. The brakes may need to be manually applied.

Do Not Use ACC on Hills and When Towing a Trailer

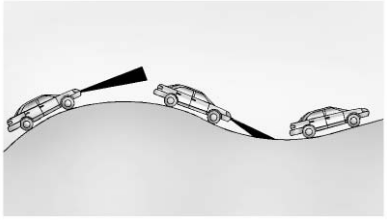

Do not use ACC when driving on steep hills or when towing a trailer. ACC will not detect a vehicle in the lane while driving on steep hills. The driver will often need to take over acceleration and braking on steep hills, especially when towing a trailer. If the brakes are applied, the ACC disengages.

Disengaging ACC

There are three ways to disengage ACC:

- Step lightly on the brake pedal.
- Press .
- Press .

Erasing Speed Memory

The cruise control set speed is erased from memory if is pressed or if the ignition is turned off.

Cleaning the Sensing System

The camera sensor on the windshield behind the rearview mirror and the radar sensors on the front of the vehicle can become blocked by snow, ice, dirt, or mud. These areas need to be cleaned for ACC to operate properly.

For cleaning instructions, see “Washing the Vehicle” under *Exterior Care* ⇨ *333*.

System operation may also be limited under snow, heavy rain, or road spray conditions.

Driver Assistance Systems

This vehicle may have features that work together to help avoid crashes or reduce crash damage while driving, backing, and parking. Read this entire section before using these systems.

⚠ Warning

Do not rely on the Driver Assistance Systems. These systems do not replace the need for paying attention and driving safely. You may not hear or feel alerts or warnings provided by these systems. Failure to use proper care when driving may result in injury, death, or vehicle damage. See *Defensive Driving* ⇨ *193*.

(Continued)

Warning (Continued)

Under many conditions, these systems will not:

- Detect children, pedestrians, bicyclists, or animals.
- Detect vehicles or objects outside the area monitored by the system.
- Work at all driving speeds.
- Warn you or provide you with enough time to avoid a crash.
- Work under poor visibility or bad weather conditions.
- Work if the detection sensor is not cleaned or is covered by ice, snow, mud, or dirt.

Complete attention is always required while driving, and you should be ready to take action and apply the brakes and/or steer the vehicle to avoid crashes.

Audible or Safety Alert Seat

Some driver assistance features alert the driver of obstacles by beeping. To change the volume of the warning chime, see “Comfort and Convenience” under *Vehicle Personalization* ⇨ *157*.

If equipped with the Safety Alert Seat, the driver seat cushion may provide a vibrating pulse alert instead of beeping. To change this, see “Collision/Detection Systems” under *Vehicle Personalization* ⇨ *157*.

Assistance Systems for Parking or Backing

If equipped, the Rear Vision Camera (RVC), Rear Parking Assist (RPA), Front Parking Assist (FPA), Surround Vision, Front Vision Camera, Rear Automatic Braking (RAB) and Backing Warning System, Rear Cross Traffic Alert (RCTA), and Automatic Parking Assist (APA) may help the driver park or avoid objects. Always check around the vehicle when parking or backing.

Rear Vision Camera (RVC)

When the vehicle is shifted into R (Reverse), the RVC displays an image of the area behind the vehicle in the center stack display. The previous screen displays when the vehicle is shifted out of R (Reverse) after a short delay. To return to the previous screen sooner, press a button on the infotainment system, shift into P (Park), or reach a vehicle speed of 8 km/h (5 mph).

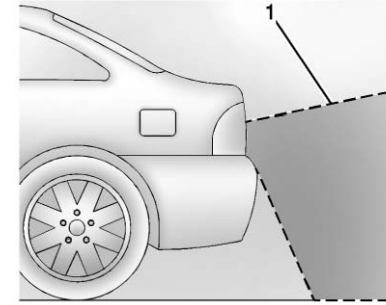

1. View Displayed by the Camera

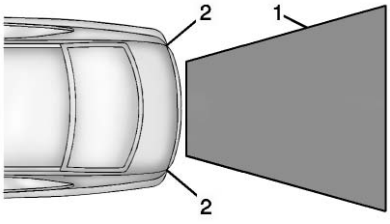

1. View Displayed by the Camera
2. Corners of the Rear Bumper

Displayed images may be farther or closer than they appear. The area displayed is limited and objects that are close to either corner of the bumper or under the bumper do not display.

A warning triangle may display on the RVC screen to show that RPA has detected an object. This triangle changes from amber to red and increases in size the closer the object.

Surround Vision

If equipped, Surround Vision displays an image of the area surrounding the vehicle, along with the front or rear camera views in the center stack. The front camera is in the grille or near the front emblem, the side cameras are on the bottom of the outside rearview mirrors, and the rear camera is above the license plate.

⚠ Warning

The Surround Vision cameras have blind spots and will not display all objects near the corners of the vehicle. Folding side mirrors that are out of position will not display surround view correctly. Always check around the vehicle when parking or backing.

1. Views Displayed by the Surround Vision Cameras
2. Area Not Shown

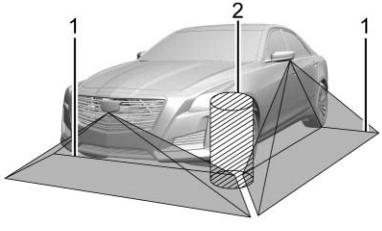

1. Views Displayed by the Surround Vision Cameras
2. Area Not Shown

Front Vision Camera

If equipped, a view of the area in front of the vehicle displays in the center stack. The view displays after

shifting from R (Reverse) to a forward gear, or by pressing CAMERA in the center stack, and when the vehicle is moving forward slower than 8 km/h (5 mph).
If equipped, the front view camera also displays when the Front Parking Assist system detects an object within 30 cm (12 in).

⚠ Warning

The camera(s) do not display children, pedestrians, bicyclists, crossing traffic, animals, or any other object outside of the cameras' field of view, below the bumper, or under the vehicle. Shown distances may be different from actual distances. Do not drive or park the vehicle using only these camera(s). Always check behind and around the vehicle before driving. Failure to use proper care may result in injury, death, or vehicle damage.

Parking Assist

With RPA, and if equipped with FPA, as the vehicle moves at speeds of less than 8 km/h (5 mph) the sensors on the bumpers may detect objects up to 2.5 m (8 ft) behind and 1.2 m (4 ft) in front of the vehicle within a zone 25 cm (10 in) high off the ground and below bumper level. These detection distances may be shorter during warmer or humid weather. Blocked sensors will not detect objects and can also cause false detections. Keep the sensors clean of mud, dirt, snow, ice, and slush; and clean sensors after a car wash in freezing temperatures.

⚠ Warning

The Parking Assist system does not detect children, pedestrians, bicyclists, animals, or objects located below the bumper or that are too close or too far from the vehicle. It is not available at speeds greater than 8 km/h (5 mph). To prevent injury, death,

(Continued)

Warning (Continued)

or vehicle damage, even with parking assist, always check the area around the vehicle and check all mirrors before moving forward or backing.

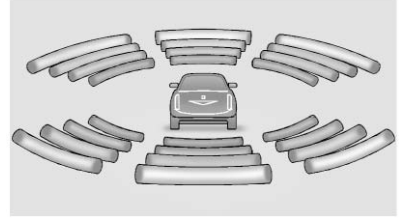

The instrument cluster may have a parking assist display with bars that show "distance to object" and object location information for the Parking Assist system. As the object gets closer, more bars light up and the bars change color from yellow to amber to red.

When an object is first detected in the rear, one beep will be heard from the rear, or both sides of the

Safety Alert Seat will pulse two times. When an object is very close (<0.6 m (2 ft) in the vehicle rear, or <0.3 m (1 ft) in the vehicle front), five beeps will sound from the front or rear depending on object location, or both sides of the Safety Alert Seat will pulse five times. Beeps for FPA are higher pitched than for RPA.

Backing Warning and Rear Automatic Braking

Vehicles with Adaptive Cruise Control (ACC) have the Backing Warning System and Rear Automatic Braking (RAB) system. The Backing Warning part of this system can warn of rear objects when backing up at speeds greater than 8 km/h (5 mph).

The Backing Warning System will beep once from the rear when an object is first detected, or pulse twice on both sides of the Safety Alert Seat. When the system detects a potential crash, beeps will be heard from the rear, or five pulses will be felt on both sides of the Safety Alert Seat. There may also be a brief, sharp application of the brakes.

⚠ Warning

The Backing Warning System only operates at speeds greater than 8 km/h (5 mph). It does not detect children, pedestrians, bicyclists, animals, or objects below the bumper or that are too close or too far from the vehicle. In some situations, such as at higher backing speeds, there may not be enough time for the short, sharp application of the vehicle brake system to occur. To prevent injury, death, or vehicle damage, even with the Backing Warning System, always check the area around the vehicle and check all mirrors before backing.

When the vehicle is in R (Reverse), if the system detects the vehicle is backing too fast to avoid a crash with a detected object behind your vehicle in your path, it may automatically brake hard to a stop to help avoid or reduce the harm caused by a backing crash.

⚠ Warning

Rear Automatic Braking may not avoid many types of backing crashes. Do not wait for the automatic braking to apply. This system is not designed to replace driver braking and only works in R (Reverse) when an object is detected directly behind the vehicle. It may not brake or stop in time to avoid a crash. It will not brake for objects when the vehicle is moving at very low speeds. It does not detect children, pedestrians, bicyclists, animals, or objects below the bumper or that are too close or too far from the vehicle. To prevent injury, death, or vehicle damage, even with Rear Automatic Braking, always check the area around the vehicle before and while backing.

Pressing the brake pedal after the vehicle comes to a stop will release RAB. If the brake pedal is not pressed soon after the stop, the Electric Parking Brake (EPB) may be set. When it is safe, press the accelerator pedal firmly at any time to override RAB.

⚠ Warning

There may be instances where unexpected or undesired automatic braking occurs. If this happens, either press the brake pedal or firmly press the accelerator pedal to release the brakes from the Rear Automatic Braking system. Before releasing the brakes, check the RVC screen and check the area around the vehicle to make sure it is safe to proceed.

Rear Cross Traffic Alert (RCTA)

If equipped, RCTA displays a red warning triangle with a left or right pointing arrow on the RVC screen to warn of traffic coming from the left or right. This system detects objects coming from up to 20 m (65 ft) from the left or right side of the vehicle. When an object is detected, either three beeps sound from the left or right or three Safety Alert Seat pulses occur on the left or right side, depending on the direction of the detected vehicle.

Use caution while backing up when towing a trailer, as the RCTA detection zones that extend out from the back of the vehicle do not move further back when a trailer is towed.

See *Radio Frequency Statement* ⇨ *371*.

Turning the Features On or Off

Touch P on the center stack to turn on or off the Front and Rear Parking Assist, Rear Automatic Braking (RAB), Rear Cross Traffic Alert (RCTA), and the Backing Warning System at the same time. The indicator light next to the button comes on when the features are on and turns off when the features have been disabled.

Turn off parking assist, RCTA, and RAB when towing a trailer.

To turn the RPA symbols or guidance lines (on some models) on or off, see “Rear Camera” under *Vehicle Personalization* ⇨ *157*.

RCTA can also be turned on or off through vehicle personalization. See “Collision/Detection Systems” under *Vehicle Personalization* ⇨ *157*.

Automatic Parking Assist (APA)

If equipped, APA searches for and steers the vehicle into parallel and perpendicular parking spots. When using APA, you must still shift gears, and control the brakes and accelerator. The Driver information Center (DIC) and audible beeps help to guide parking maneuvers.

Do not use APA when towing a trailer.

⚠ Warning

APA does not apply the brakes. APA may not detect objects in the parking space, objects that are soft or narrow, objects high off the ground such as flatbed trucks, or objects below ground level such as large potholes. Always verify that the parking space is appropriate for parking a vehicle. APA does not respond to changes in the parking space, such as movement of an adjacent vehicle, or a person or object entering the parking space. APA does not detect or avoid traffic that is behind or alongside of the vehicle. Always be prepared to stop the vehicle during the parking maneuver.

Touch P on the center stack to enable the system to search for a parking space that is large enough and within 1.5 m (5 ft) of the vehicle.

The vehicle speed must be below 30 km/h (18 mph). The system cannot:

- Detect whether it is a legal parking space.
- Park exactly lined up with the vehicle next to it if the spot is approached at an angle or if the parking space is angled.
- Park exactly centered in a spot that is marked too large.
- Always detect short curbs.

If the vehicle is equipped with perpendicular parking mode, touch and hold P during the search process to switch the APA parking mode between perpendicular and parallel parking.

APA searches for parking spaces to the right of the vehicle. To search for a parking space to the left, turn on the left turn signal.

After completely passing a large enough space, an audible beep occurs and a red symbol displays in the DIC.

If the vehicle is in R (Reverse), but does not steer into the expected space, this may be because the system is maneuvering the vehicle into a previously detected space. The APA system does not need service.

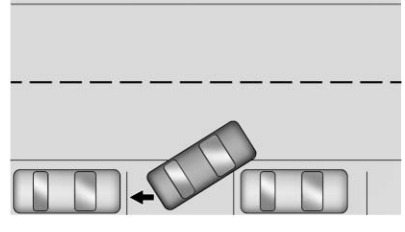

APA will instruct the vehicle to stop once a large enough space is found. Follow the instructions in the DIC. When instructed to drive in reverse, shift to R (Reverse) to engage automatic steering. The steering wheel will vibrate briefly as a reminder to remove hands from the steering wheel. Check surroundings and continue braking or accelerating as needed, and be prepared to stop to avoid vehicles, pedestrians, or objects. If the vehicle exceeds 10 km/h (6 mph), APA is automatically disengaged. A DIC progress arrow displays the status of the parking maneuver. Depending on the space size, additional maneuvers may be required, and there will be additional instructions. When changing gears, allow the automatic steering to complete before continuing the parking maneuver. APA will beep and display a PARKING COMPLETE message. Place the vehicle in P (Park).

APA may automatically disengage if:

- The steering wheel is used by the driver.
- The maximum allowed speed is exceeded.
- There is a failure with the APA system.
- Electronic stability control or antilock brakes are activated.
- A high priority vehicle message is displayed in the DIC.

To cancel APA, touch P again.

When the System Does Not Seem to Work Properly

The APA system may require a short period of driving along curves to calibrate.

Assistance Systems for Driving

If equipped, when driving the vehicle in a forward gear, Forward Collision Alert (FCA), Lane Departure Warning (LDW), Lane Keep Assist (LKA), Side Blind Zone Alert (SBZA), Lane Change Alert (LCA), the Front Automatic Braking (FAB) system, the Front Pedestrian Braking (FPB) system and/or the Night Vision system can help to avoid a crash or reduce crash damage.

Forward Collision Alert (FCA) System

If equipped, the FCA system may help to avoid or reduce the harm caused by front-end crashes. When approaching a vehicle ahead too quickly, FCA provides a red flashing alert on the windshield and rapidly beeps or pulses the driver seat. FCA also lights an amber visual alert if following another vehicle much too closely.

FCA detects vehicles within a distance of approximately 60 m (197 ft) and operates at speeds above 8 km/h (5 mph). If the vehicle has Adaptive Cruise Control (ACC), it can detect vehicles to distances of approximately 110 m (360 ft) and operates at all speeds. See *Adaptive Cruise Control* ⇨ *223*.

⚠ Warning

FCA is a warning system and does not apply the brakes. When approaching a slower-moving or stopped vehicle ahead too rapidly, or when following a vehicle too closely, FCA may not provide a warning with enough time to help avoid a crash. It also may not provide any warning at all. FCA does not warn of pedestrians, animals, signs, guardrails, bridges, construction barrels, or other objects. Be ready to take action and apply the brakes. See *Defensive Driving* ⇨ *193*.

FCA can be disabled with the FCA steering wheel control, or if your vehicle is equipped with Adaptive Cruise Control (ACC), through vehicle personalization. See the "Auto Collision Preparation" portion of "Collision/Detection Systems" under *Vehicle Personalization* ⇨ *157*.

Detecting the Vehicle Ahead

FCA warnings will not occur unless the FCA system detects a vehicle ahead. When a vehicle is detected, the vehicle ahead indicator will display green. Vehicles may not be detected on curves, highway exit ramps, or hills, due to poor visibility; or if a vehicle ahead is partially blocked by pedestrians or other objects. FCA will not detect another vehicle ahead until it is completely in the driving lane.

⚠ Warning

FCA does not provide a warning to help avoid a crash, unless it detects a vehicle. FCA may not detect a vehicle ahead if the FCA sensor is blocked by dirt, snow,

(Continued)

Warning (Continued)

or ice, or if the windshield is damaged. It may also not detect a vehicle on winding or hilly roads, or in conditions that can limit visibility such as fog, rain, or snow, or if the headlamps or windshield are not cleaned or in proper condition. Keep the windshield, headlamps, and FCA sensors clean and in good repair.

Collision Alert

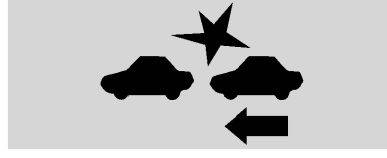

With Head-Up Display

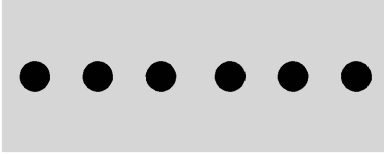

Without Head-Up Display

When your vehicle approaches another detected vehicle too rapidly, the red FCA display will flash on the windshield. Also, eight rapid high-pitched beeps will sound from the front, or both sides of the Safety Alert Seat will pulse five times. When this Collision Alert occurs, the brake system may prepare for driver braking to occur more rapidly which can cause a brief, mild deceleration. Continue to apply the brake pedal as needed. Cruise control may be disengaged when the Collision Alert occurs.

Tailgating Alert

The vehicle ahead indicator will display amber when you are following a vehicle ahead much too closely.

Selecting the Alert Timing

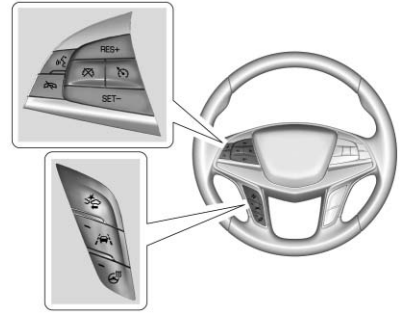

The Collision Alert control is on the steering wheel. Press to set the FCA timing to Far, Medium, or Near, or on some vehicles, Off. The first button press shows the current setting on the DIC. Additional button presses will change this setting. The chosen setting will remain until it is changed and will affect the timing of both the Collision Alert and the Tailgating Alert features. The timing of both alerts will vary based on vehicle speed. The faster the vehicle speed, the farther away the alert will occur. Consider traffic and weather conditions when selecting the alert timing. The range of selectable alert timings may not be appropriate for all drivers and driving conditions.

If your vehicle is equipped with Adaptive Cruise Control (ACC), changing the FCA timing setting automatically changes the following gap setting (Far, Medium, or Near).

Unnecessary Alerts

FCA may provide unnecessary alerts for turning vehicles, vehicles in other lanes, objects that are not vehicles, or shadows. These alerts are normal operation and the vehicle does not need service.

Cleaning the System

If the FCA system does not seem to operate properly, cleaning the outside of the windshield in front of the rearview mirror, and cleaning the front of the vehicle where radar sensors are located, may correct the issue.

Front Automatic Braking (FAB) System

If the vehicle has Forward Collision Alert (FCA), it also has FAB, which includes Intelligent Brake Assist (IBA). When the system detects a vehicle ahead in your path that is traveling in the same direction that you may be about to crash into, it can provide a boost to braking or automatically brake the vehicle. This can help avoid or lessen the severity of crashes when driving in a forward gear. Depending on the situation, the vehicle may automatically brake moderately or hard. This front automatic braking can only occur if a vehicle is detected. This is shown by the FCA vehicle ahead indicator being lit. See *Forward Collision Alert (FCA) System* ⇨ *237*.

The system works when driving in a forward gear between 8 km/h (5 mph) and 80 km/h (50 mph), or on vehicles with Adaptive Cruise Control (ACC), above 4 km/h (2 mph). It can detect vehicles up to approximately 60 m (197 ft).

⚠ Warning

FAB is an emergency crash preparation feature and is not designed to avoid crashes. Do not rely on FAB to brake the vehicle. FAB will not brake outside of its operating speed range and only responds to detected vehicles.

FAB may not:

- Detect a vehicle ahead on winding or hilly roads.

(Continued)

Warning (Continued)

- Detect all vehicles, especially vehicles with a trailer, tractors, muddy vehicles, etc.
- Detect a vehicle when weather limits visibility, such as in fog, rain, or snow.
- Detect a vehicle ahead if it is partially blocked by pedestrians or other objects.

Complete attention is always required while driving, and you should be ready to take action and apply the brakes and/or steer the vehicle to avoid crashes.

FAB may slow the vehicle to a complete stop to try to avoid a potential crash. If this happens, FAB may engage the Electric Parking Brake (EPB) to hold the vehicle at a stop. Release the EPB or firmly press the accelerator pedal.

⚠ Warning

FAB may automatically brake the vehicle suddenly in situations where it is unexpected and undesired. It could respond to a turning vehicle ahead, guardrails, signs, and other non-moving objects. To override FAB, firmly press the accelerator pedal, if it is safe to do so.

Intelligent Brake Assist (IBA)

IBA may activate when the brake pedal is applied quickly by providing a boost to braking based on the speed of approach and distance to a vehicle ahead.

Minor brake pedal pulsations or pedal movement during this time is normal and the brake pedal should continue to be applied as needed. IBA will automatically disengage only when the brake pedal is released.

⚠ Warning

IBA may increase vehicle braking in situations when it may not be necessary. You could block the flow of traffic. If this occurs, take your foot off the brake pedal and then apply the brakes as needed.

FAB and IBA can be disabled through vehicle personalization. See “Auto Collision Preparation” in “Collision/Detection Systems” under *Vehicle Personalization* ⇨ *157*.

⚠ Warning

Using FAB or IBA while towing a trailer could cause you to lose control of the vehicle and crash. Turn the system to Alert, or if the vehicle has ACC to Off, when towing a trailer.

Front Pedestrian Braking (FPB) System

If equipped, the FPB system may help avoid or reduce the harm caused by front-end crashes with nearby pedestrians when driving in a forward gear. FPB displays an amber indicator, 🚶, when a nearby pedestrian is detected directly ahead. When approaching a detected pedestrian too quickly, FPB provides a red flashing alert on the windshield and rapidly beeps or pulses the driver seat. FPB can provide a boost to braking or automatically brake the vehicle. This system includes Intelligent Brake Assist (IBA), and the Front Automatic Braking (FAB) System may also respond to pedestrians. See *Front Automatic Braking (FAB) System* ⇨ *240*.

The FPB system can detect and alert to pedestrians in a forward gear at speeds between 8 km/h (5 mph) and 80 km/h (50 mph). During daytime driving, the system detects pedestrians up to a distance of approximately 40 m (131 ft).

During nighttime driving, system performance is very limited. If the vehicle is equipped with the Night Vision system, during nighttime driving, the vehicle can detect and alert to pedestrians whenever in a forward gear.

⚠ Warning

FPB does not provide an alert or automatically brake the vehicle, unless it detects a pedestrian. FPB may not detect pedestrians, including children:

- When the pedestrian is not directly ahead, fully visible, or standing upright, or when part of a group.
- Due to poor visibility, including nighttime conditions, fog, rain, or snow.
- If the FPB sensor is blocked by dirt, snow, or ice.

(Continued)

Warning (Continued)

- If the headlamps or windshield are not cleaned or in proper condition.

Be ready to take action and apply the brakes. For more information, see *Defensive Driving* ⇨ *193*. Keep the windshield, headlamps, and FPB sensor clean and in good repair.

FPB can be set to Off, Alert, or Alert & Brake through vehicle personalization. See “Front Pedestrian Detection” in “Collision/ Detection Systems” under *Vehicle Personalization* ⇨ *157*.

Detecting the Pedestrian Ahead

FPB alerts and automatic braking will not occur unless the FPB system detects a pedestrian. When a nearby pedestrian is detected directly in front of the vehicle, the pedestrian ahead indicator will display amber.

Front Pedestrian Alert

With Head-Up Display

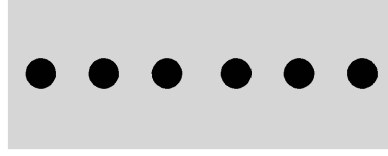

Without Head-Up Display

When the vehicle approaches a pedestrian ahead too rapidly, the red FPB alert display will flash on the windshield. Eight rapid high-pitched beeps will sound from the front, or both sides of the Safety

Alert Seat will pulse five times. When this Pedestrian Alert occurs, the brake system may prepare for driver braking to occur more rapidly which can cause a brief, mild deceleration. Continue to apply the brake pedal as needed. Cruise control may be disengaged when the Front Pedestrian Alert occurs.

Automatic Braking

If FPB detects it is about to crash into a pedestrian directly ahead, and the brakes have not been applied, FPB may automatically brake moderately or brake hard. This can help to avoid some very low speed pedestrian crashes or reduce pedestrian injury. FPB can automatically brake to detected pedestrians between 8 km/h (5 mph) and 80 km/h (50 mph). Automatic braking levels are reduced to moderate levels between 18 km/h (11 mph) and 80 km/h (50 mph). If also equipped with the Night Vision system, pedestrians detected by the Night Vision system will not cause automatic braking to occur.

If this happens, Automatic Braking may engage the Electric Parking Brake (EPB) to hold the vehicle at a stop. Release the EPB. A firm press of the accelerator pedal will also release Automatic Braking and the EPB.

⚠ Warning

FPB may alert or automatically brake the vehicle suddenly in situations where it is unexpected and undesired. It could falsely alert or brake for objects similar in shape or size to pedestrians, including shadows. This is normal operation and the vehicle does not need service. To override Automatic Braking, firmly press the accelerator pedal, if it is safe to do so.

Automatic Braking can be disabled through vehicle personalization. See “Front Pedestrian Detection” in “Collision/Detection Systems” under *Vehicle Personalization* ⇨ *157*.

⚠ Warning

Using the Front Pedestrian Braking System while towing a trailer could cause you to lose control of the vehicle and crash. Turn the system to Alert or Off when towing a trailer.

Cleaning the System

If FPB does not seem to operate properly, cleaning the outside of the windshield in front of the rearview mirror may correct the issue.

Night Vision System

If equipped, this system can help the driver see and alert the driver to pedestrians or large animals ahead of the vehicle beyond the area lit by the headlamps. A thermal heat image of the view ahead is displayed when it is dark enough outside. If a pedestrian or large animal is detected more than 25 m (82 ft) away, an amber pedestrian or animal icon displays and a box appears around the pedestrian or

animal. When the system detects that the vehicle is approaching a pedestrian ahead much too quickly, the box changes to red.

With the Front Pedestrian Braking system turned on, Night Vision provides a red Head-Up Display (HUD) alert when the system detects that the vehicle is approaching a pedestrian ahead much too quickly. In addition, an alert beeps or the Safety Alert Seat pulses, if equipped. See *Front Pedestrian Braking (FPB) System* ⇨ *241*.

⚠ Warning

The system does not detect all objects or the vehicle distance from objects. The system may not provide a warning with enough time to help avoid a crash.

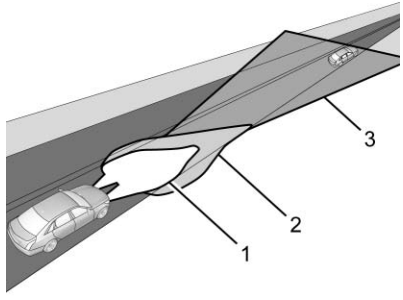

1. Low-Beam Headlamps
2. High-Beam Headlamps
3. Night Vision System

By selecting a view on the instrument cluster, the Night Vision image can be displayed. See *Instrument Cluster (Uplevel)* ⇨ *121* or *Instrument Cluster (Base Level)* ⇨ *118*. The Night Vision system can operate only if:

- The ignition is on.
- The vehicle is in P (Park) or a forward gear.
- It is dark enough outside.
- The headlamps are on.

Adjust the instrument panel brightness to make the image no brighter than necessary. Turn the image off by selecting another view on the instrument cluster.

Warm objects, such as pedestrians, animals, and other moving vehicles, should appear whiter on the Night Vision display. Cold objects, such as the sky, signs, and parked vehicles, should appear darker. Night Vision only shows objects that are warmer or colder than the surroundings. It does not detect brake lamps, turn signals, emergency flashers, traffic lights, or sign information.

Use this system as an aid by occasionally glancing at the image. Do not stare at the image or use the image under well-lit conditions.

⚠ Warning

Do not stare at the image while driving as this might cause important objects ahead not to be seen. You could crash, and you or others could be injured.

When a pedestrian or large animal is detected, an amber box displays around the pedestrian or animal on the Night Vision display and an amber pedestrian icon, 🚶, or animal icon, ⚠, displays on the instrument cluster. This pedestrian icon is also shown on the Head-Up Display (HUD). When the system detects the vehicle is approaching a pedestrian much too quickly, the amber box turns red, and a red flashing icon, 🚶, displays on the HUD with rapid beeping or pulsing of the Safety Alert Seat, if equipped.

System pedestrian icons, beeps, and (if equipped) Safety Alert Seat pulses can be set to Off through vehicle personalization by turning off the Front Pedestrian Braking system. See “Front Pedestrian Detection” in “Collision/Detection Systems” under *Vehicle Personalization* ⇨ *157*.

⚠ Warning

The Night Vision system does not automatically brake the vehicle. It does not provide alerts unless it detects a pedestrian or large animal. The system may not detect pedestrians, including children, or animals:

- If they are less than 25 m (82 ft) away.
- If they are not directly ahead in the sensor coverage area, fully visible, standing upright, or part of a group.

(Continued)

Warning (Continued)

- If the pedestrian or animal is moving too quickly through the field of view, such as a bicyclist.
- If the pedestrian is wearing certain types of clothing.
- If headlamps are off, except when parked.
- If the outside temperature is higher than 30 °C (86 °F).
- Due to poor visibility, including in heavy fog, rain, or snow.
- If the sensor is blocked by dirt, snow, rain, or ice.

Be ready to take action and apply the brakes. For more information, see *Defensive Driving* ⇨ *193*. Keep the Night Vision sensor clean and in good repair.

Pedestrian detection may not be available in high outside temperatures. An amber icon, , displays. The system does not need service.

In rain, snow, or fog the image may not be clear and the direction of the road ahead may not be seen. In more severe weather conditions, the image may be unclear and unusable. The system does not need service.

Keep the system sensor clean by activating the windshield washer up to five times when it is dark enough for the system to operate. If the Night Vision image still looks blurry, use a soft wet cloth to gently clean the sensor camera lens and dry thoroughly. The sensor is behind the front grille to the inside of the driver side headlamp.

The camera must also be aligned to work correctly. If the camera needs adjustment, see your dealer. Do not attempt to adjust the camera yourself.

Side Blind Zone Alert (SBZA)

If equipped, the SBZA system is a lane-changing aid that assists drivers with avoiding crashes that occur with moving vehicles in the side blind zone (or spot) areas. When the vehicle is in a forward gear, the left or right side mirror display will light up if a moving vehicle is detected in that blind zone. If the turn signal is activated and a vehicle is also detected on the same side, the display will flash as an extra warning not to change lanes. Since this system is part of the Lane Change Alert (LCA) system, read the entire LCA section before using this feature.

Lane Change Alert (LCA)

If equipped, the LCA system is a lane-changing aid that assists drivers with avoiding lane change crashes that occur with moving vehicles in the side blind zone (or spot) areas or with vehicles rapidly approaching these areas from behind. The LCA warning display will light up in the corresponding outside side mirror and will flash if the turn signal is on.

⚠ Warning

LCA does not alert the driver to vehicles outside of the system detection zones, pedestrians, bicyclists, or animals. It may not provide alerts when changing lanes under all driving conditions. Failure to use proper care when changing lanes may result in injury, death, or vehicle damage. Before making a lane change, always check mirrors, glance over your shoulder, and use the turn signals.

LCA Detection Zones

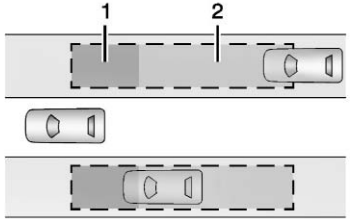

1. SBZA Detection Zone
2. LCA Detection Zone

The LCA sensor covers a zone of approximately one lane over from both sides of the vehicle, or 3.5 m (11 ft). The height of the zone is approximately between 0.5 m (1.5 ft) and 2 m (6 ft) off the ground. The Side Blind Zone Alert (SBZA) warning area starts at approximately the middle of the vehicle and goes back 5 m (16 ft). Drivers are also warned of vehicles rapidly approaching from up to 70 m (230 ft) behind the vehicle.

How the System Works

The LCA symbol lights up in the side mirrors when the system detects a moving vehicle in the next lane over that is in the side blind zone or rapidly approaching that zone from behind. A lit LCA symbol indicates it may be unsafe to change lanes. Before making a lane change, check the LCA display, check mirrors, glance over your shoulder, and use the turn signals.

Left Side Mirror Display

Right Side Mirror Display

When the vehicle is started, both outside mirror LCA displays will briefly come on to indicate the system is operating. When the vehicle is in a forward gear, the left or right side mirror display will light up if a moving vehicle is detected in the next lane over in that blind zone or rapidly approaching that zone.

If the turn signal is activated in the same direction as a detected vehicle, this display will flash as an extra warning not to change lanes.

LCA can be disabled through vehicle personalization using the Side Blind Zone Alert option. See “Collision/Detection Systems” under *Vehicle Personalization* ⇨ *157*.
If LCA is disabled by the driver, the LCA mirror displays will not light up.

When the System Does Not Seem to Work Properly

The LCA system requires some driving for the system to calibrate to maximum performance. This calibration may occur more quickly if the vehicle is driving on a straight highway road with traffic and roadside objects (e.g., guardrails, barriers).

LCA displays may not come on when passing a vehicle quickly, for a stopped vehicle, or when towing a trailer. The LCA detection zones that extend back from the side of the vehicle do not move further back when a trailer is towed. Use caution while changing lanes when towing a

trailer. LCA may alert to objects attached to the vehicle, such as a trailer, bicycle, or object extending out to either side of the vehicle. Attached objects may also interfere with the detection of vehicles. This is normal system operation; the vehicle does not need service.

LCA may not always alert the driver to vehicles in the next lane over, especially in wet conditions or when driving on sharp curves. The system does not need to be serviced. The system may light up due to guardrails, signs, trees, shrubs, and other non-moving objects. This is normal system operation; the vehicle does not need service.

LCA may not operate when the LCA sensors in the left or right corners of the rear bumper are covered with mud, dirt, snow, ice, or slush, or in heavy rainstorms. For cleaning instructions, see "Washing the Vehicle" under *Exterior Care* ⇨ *333*. If the DIC still displays the system unavailable message after cleaning both sides of the vehicle toward the rear corners of the vehicle, see your dealer.

If the LCA displays do not light up when moving vehicles are in the side blind zone or are rapidly approaching this zone and the system is clean, the system may need service. Take the vehicle to your dealer.

When LCA is disabled for any reason other than the driver turning it off, the Side Blind Zone Alert On option will not be available on the personalization menu.

Radio Frequency Information

See *Radio Frequency Statement* ⇨ *371*.

Lane Departure Warning (LDW)

If equipped, LDW may help avoid crashes due to unintentional lane departures. It may provide a warning if the vehicle is crossing a detected lane marking without using a turn signal in the lane departure direction. Since this system is part of the Lane Keep Assist (LKA) system, read the entire LKA section before using this feature.

Lane Keep Assist (LKA)

If equipped, LKA may help avoid crashes due to unintentional lane departures. It may assist by gently turning the steering wheel if the vehicle approaches a detected lane marking without using a turn signal in that direction. It may also provide a Lane Departure Warning (LDW) system alert as the lane marking is crossed. The LKA system will not assist or provide an LDW alert if it detects that you are actively steering. Override LKA by turning the steering wheel. LKA uses a camera to detect lane markings between 60 km/h (37 mph) and 180 km/h (112 mph).

⚠ Warning

The LKA system does not continuously steer the vehicle. It may not keep the vehicle in the lane or give a Lane Departure Warning (LDW) alert, even if a lane marking is detected.

(Continued)

Warning (Continued)

The LKA and LDW systems may not:

- Provide an alert or enough steering assist to avoid a lane departure or crash.
- Detect lane markings under poor weather or visibility conditions. This can occur if the windshield or headlamps are blocked by dirt, snow, or ice, if they are not in proper condition, or if the sun shines directly into the camera.
- Detect road edges.
- Detect lanes on winding or hilly roads.

If LKA only detects lane markings on one side of the road, it will only assist or provide an LDW alert when approaching the lane on the side where it has detected a lane marking. Even with LKA and LDW, you must steer the

(Continued)

Warning (Continued)

vehicle. Always keep your attention on the road and maintain proper vehicle position within the lane, or vehicle damage, injury, or death could occur. Always keep the windshield, headlamps, and camera sensors clean and in good repair. Do not use LKA in bad weather conditions.

⚠ Warning

Using LKA while towing a trailer or on slippery roads could cause loss of control of the vehicle and a crash. Turn the system off.

How the System Works

The LKA camera sensor is on the windshield ahead of the rearview mirror.

To turn LKA on and off, press on the steering wheel.

When on, is green if LKA is available to assist and provide LDW alerts. It may assist by gently turning the steering wheel and display as amber if the vehicle approaches a detected lane marking without using a turn signal in that direction. It may also provide an LDW alert by flashing amber as the lane marking is crossed. Additionally, there will be three beeps, or the driver seat will pulse three times, on the right or left, depending on the lane departure direction.

The LKA system does not continuously steer the vehicle. If LKA does not detect active driver steering, an alert and chime may be provided. Move the steering wheel to dismiss.

When the System Does Not Seem to Work Properly

The system performance may be affected by:

- Close vehicles ahead.

- Sudden lighting changes, such as when driving through tunnels.
- Banked roads.
- Roads with poor lane markings, such as two-lane roads.

If the LKA system is not functioning properly when lane markings are clearly visible, cleaning the windshield may help.

LKA assistance and/or LDW alerts may occur due to tar marks, shadows, cracks in the road, temporary or construction lane markings, or other road imperfections. This is normal system operation; the vehicle does not need service. Turn LKA off if these conditions continue.

Surround Vision Recorder

If equipped, this system records the 360° camera views to an SD card. Only images are recorded, no sound. An SD card will be needed for this system. The recommended SD card is an 8-32GB SDHC card with FAT32 file system, Class 4 and over.

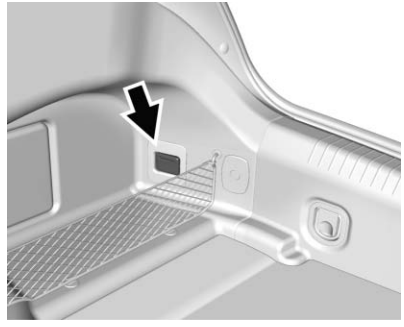

Insert the SD card into the card reader located in the trunk. Opening the trunk will disable recording to safely remove the SD card.

Other files should not be stored on the same SD card as the surround vision recorder files. Storing other files on the same card may increase recording start up and playback time or result in a loss of data.

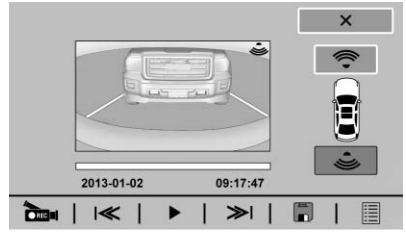

To Activate : Touch Video Recorder on the Home screen. Touch REC. REC will have a red dot when the video recorder is on. It will remain on until it has been turned off. Advise other drivers and occupants of the vehicle that video images are being recorded.

To Deactivate : Touch Video Recorder on the Home screen. Touch REC.

Select from the following when the vehicle is in P (Park).

Exit : Touch to exit this application and return to the previous app.

Video List : Touch to display a list of the most recent and saved videos. Touch the delete button next to the name to delete a saved video.

Rewind : Touch to rewind the video. Touch again to stop rewinding.

Play/Pause : Touch to play or pause a recorded video.

Fast Forward : Touch to fast forward the video. Touch again to stop fast forward.

Save : Touch to save a video. This protects the video from being erased. Once the SD card is full, files will be overwritten unless they have been saved.

Front/Rear Camera View : Select to switch between the front and rear camera views in playback.

Touching < Back returns to the player view with video that was previously loaded still showing.

The latest recorded video file can be played. In addition:

- There are approximately 12 hours of video storage based on an 8GB SD card. This could vary based on exterior lighting conditions.
- The recorded video is stored in five-minute-long files.
- All files can be viewed on the playback app or when the SD card is read by a PC.
- Once the SD card is full, the oldest files will be overwritten.

To Delete Data : Remove the SD card from the vehicle and insert into a personal computer to manually delete the file.

Error messages can occur if:

- No SD card is present.
- There is a system error.
- The SD card is full.

Fuel

Use of the recommended fuel is an important part of the proper maintenance of this vehicle. When driving in the U.S. and Canada, to help keep the engine clean and maintain optimum vehicle performance, we recommend using TOP TIER Detergent Gasolines. See www.toptiergas.com for a list of TOP TIER Detergent Gasolines.

TOP TIER™ Detergent Gasoline

CATÉGORIE SUPERIÉURE™ Essences Détergentes

If the vehicle has the 2.0L L4 turbo engine, use premium unleaded gasoline meeting ASTM specification D4814 with a posted octane rating of 91 or higher.

Regular unleaded gasoline rated at 87 octane or higher can be used, but acceleration and fuel economy will be reduced, and an audible knocking noise may be heard. If this occurs, use a gasoline rated at 91 octane or higher as soon as possible. Otherwise, the engine could be damaged. If heavy knocking is heard when using gasoline with a 91 octane rating or higher, the engine needs service.

If the vehicle has the 3.0L V6 twin turbo engine, use premium unleaded gasoline meeting ASTM specification D4814 with a posted octane rating of 91 or higher. If the octane is less than 91, damage to the engine may occur and may void the vehicle warranty. If heavy knocking is heard when using gasoline rated at 91 octane or higher, the engine needs service.

If the vehicle has the 3.6L V6 engine, use regular unleaded gasoline meeting ASTM specification D4814 with a posted octane rating of 87 or higher. Do not use gasoline with an octane rating below 87, as it may cause engine damage and will lower fuel economy.

Use of Seasonal Fuels

Use summer and winter fuels in the appropriate season. The fuels industry automatically modifies the fuel for the appropriate season. If fuel is left in the vehicle tank for long periods of time, driving or starting could be affected. Drive the vehicle until the fuel is at one-half tank or less, then refuel with the current seasonal fuel.

Prohibited Fuels

Gasolines containing oxygenates such as ethers and ethanol, as well as reformulated gasolines, are available in some cities. If these gasolines comply with the previously described specification, then they are acceptable to use. However, E85 (85% ethanol) and other fuels containing more than 15% ethanol must be used only in FlexFuel vehicles.

Caution

Do not use fuel containing methanol. It can corrode metal parts in the fuel system and also damage plastic and rubber parts. That damage would not be covered under the vehicle warranty.

Some gasolines, mainly high octane racing gasolines, can contain an octane-enhancing additive called methylcyclopentadienyl manganese tricarbonyl (MMT). Do not use gasolines and/or fuel additives with MMT as they can reduce spark plug life and affect emission control system performance. The malfunction indicator lamp may turn on. If this occurs, see your dealer for service.

California Fuel Requirements

If the vehicle is certified to meet California Emissions Standards, it is designed to operate on fuels that meet California specifications. See the underhood emission control label. If this fuel is not available in states adopting California Emissions Standards, the vehicle will operate satisfactorily on fuels meeting federal specifications, but emission control system performance might be affected. The malfunction indicator lamp could turn on and the vehicle may not pass a smog-check test. See *Malfunction Indicator Lamp (Check Engine Light)* ⇨ *132*. If this occurs, return to your authorized dealer for diagnosis. If it is determined that the condition is caused by the type of fuel used, repairs may not be covered by the vehicle warranty.

Fuels in Foreign Countries

If planning to drive in countries outside the U.S. or Canada, the proper fuel might be hard to find. Check regional auto club or fuel retail brand websites for availability in the country where driving. Never use leaded gasoline, fuel containing methanol, manganese, or any other fuel not recommended. Costly repairs caused by use of improper fuel would not be covered by the vehicle warranty.

Fuel Additives

To keep fuel systems clean, TOP TIER Detergent Gasoline is recommended. See *Fuel* ⇨ *251*.

If TOP TIER Detergent Gasoline is not available, one bottle of Fuel System Treatment PLUS added to the fuel tank at every engine oil change, can help. Fuel System Treatment PLUS is the only gasoline additive recommended by General Motors. It is available at your dealer.

Filling the Tank

⚠ Warning

Fuel vapors and fuel fires burn violently and can cause injury or death.

- To help avoid injuries to you and others, read and follow all the instructions on the fuel pump island.
- Turn off the engine when refueling.
- Keep sparks, flames, and smoking materials away from fuel.
- Do not leave the fuel pump unattended.
- Do not use a cell phone while refueling.
- Do not reenter the vehicle while pumping fuel.
- Keep children away from the fuel pump and never let children pump fuel.

(Continued)

Warning (Continued)

- Fuel can spray out if the refueling nozzle is inserted too quickly. This spray can happen if the tank is nearly full, and is more likely in hot weather. Insert the refueling nozzle slowly and wait for any hiss noise to stop prior to beginning to flow fuel.

If equipped, the fuel door is locked when the vehicle doors are locked. Press 🔓 on the RKE transmitter to unlock.

To open the fuel door, push and release the rearward center edge of the door.

The vehicle has a capless refueling system and does not have a fuel cap. The filling nozzle must be fully inserted and latched prior to starting fuel flow.

⚠ Warning

Overfilling the fuel tank by more than three clicks of a standard fill nozzle may cause:

- Vehicle performance issues, including engine stalling and damage to the fuel system.
- Fuel spills.
- Potential fuel fires.

Be careful not to spill fuel. Wait a few seconds after you have finished pumping before removing the nozzle. Clean fuel from painted surfaces as soon as possible. See *Exterior Care* ⇨ *333*.

⚠ Warning

If a fire starts while you are refueling, do not remove the nozzle. Shut off the flow of fuel by shutting off the pump or by notifying the station attendant. Leave the area immediately.

Filling the Tank with a Portable Gas Can

If the vehicle runs out of fuel and must be filled from a portable gas can:

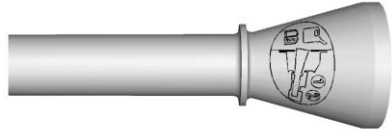

1. Locate the capless funnel adapter from under the carpet in the trunk.
2. Insert and latch the funnel into the capless fuel system.

⚠ Warning

Attempting to refuel without using the funnel adapter may cause fuel spillage and damage the capless fuel system. This could cause a fire and you or others could be badly burned and the vehicle could be damaged.

3. After filling the tank, remove and clean the funnel adapter and return it to the storage location.

Filling a Portable Fuel Container

⚠ Warning

Filling a portable fuel container while it is in the vehicle can cause fuel vapors that can ignite either by static electricity or other means. You or others could be badly burned and the vehicle could be damaged. Always:

(Continued)

Warning (Continued)

- Use approved fuel containers.
- Remove the container from the vehicle, trunk, or pickup bed before filling.
- Place the container on the ground.
- Place the nozzle inside the fill opening of the container before dispensing fuel, and keep it in contact with the fill opening until filling is complete.
- Fill the container no more than 95% full to allow for expansion.
- Do not smoke, light matches, or use lighters while pumping fuel.
- Avoid using cell phones or other electronic devices.

Trailer Towing

General Towing Information

Only use towing equipment that has been designed for the vehicle. Contact your dealer or trailering dealer for assistance with preparing the vehicle for towing a trailer. Read the entire section before towing a trailer.

For towing a disabled vehicle, see *Towing the Vehicle* ⇨ *330*. For towing the vehicle behind another vehicle such as a motor home, see *Recreational Vehicle Towing* ⇨ *331*.

Driving Characteristics and Towing Tips

Driving with a Trailer

When towing a trailer:

- Become familiar with the state and local laws that apply to trailer towing.

- Do not tow a trailer during the first 2 414 km (1,500 mi) to prevent damage to the engine, axle, or other parts.
- Then during the first 800 km (500 mi) of trailer towing, do not drive over 80 km/h (50 mph) and do not make starts at full throttle.
- Vehicles can tow in D (Drive). Shift the transmission to a lower gear if the transmission shifts too often under heavy loads and/or hilly conditions.
- Do not use Adaptive Cruise Control when towing.
- The Front Automatic Braking System should be set to Off when towing. See *Front Automatic Braking (FAB) System* ⇨ *240*.
- Turn off Parking Assist when towing.

⚠ Warning

When towing a trailer, exhaust gases may collect at the rear of the vehicle and enter if the liftgate, trunk/hatch, or rear-most window is open.

When towing a trailer:

- Do not drive with the liftgate, trunk/hatch, or rear-most window open.
- Fully open the air outlets on or under the instrument panel.
- Also adjust the climate control system to a setting that brings in only outside air. See “Climate Control Systems” in the Index.

For more information about carbon monoxide, see *Engine Exhaust* ⇨ *209*.

Towing a trailer requires a certain amount of experience. The combination you are driving is longer and not as responsive as the vehicle itself. Get acquainted with the handling and braking of the rig before setting out for the open road.

Before starting, check all trailer hitch parts and attachments, safety chains, electrical connectors, lamps, tires, and mirrors. If the trailer has electric brakes, start the combination moving and then apply the trailer brake controller by hand to be sure the brakes work.

During the trip, check occasionally to be sure that the load is secure and the lamps and any trailer brakes still work.

Following Distance

Stay at least twice as far behind the vehicle ahead as you would when driving the vehicle without a trailer. This can help to avoid heavy braking and sudden turns.

Passing

More passing distance is needed when towing a trailer. The combination will not accelerate as quickly and is longer so it is

necessary to go much farther beyond the passed vehicle before returning to the lane.

Backing Up

Hold the bottom of the steering wheel with one hand. To move the trailer to the left, move that hand to the left. To move the trailer to the right, move your hand to the right. Always back up slowly and, if possible, have someone guide you.

Making Turns

Caution

Making very sharp turns while trailering could cause the trailer to come in contact with the vehicle. The vehicle could be damaged. Avoid making very sharp turns while trailering.

When turning with a trailer, make wider turns than normal. Do this so the trailer will not strike soft shoulders, curbs, road signs, trees, or other objects. Avoid jerky or sudden maneuvers. Signal well in advance.

If the trailer turn signal bulbs burn out, the arrows on the instrument cluster will still flash for turns. It is important to check occasionally to be sure the trailer bulbs are still working.

Driving on Grades

Reduce speed and shift to a lower gear *before* starting down a long or steep downgrade. If the transmission is not shifted down, the brakes might get hot and no longer work well.

Vehicles can tow in D (Drive). Shift the transmission to a lower gear if the transmission shifts too often under heavy loads and/or hilly conditions.

When towing at high altitude on steep uphill grades, consider the following: Engine coolant will boil at a lower temperature than at normal altitudes. If the engine is turned off immediately after towing at high altitude on steep uphill grades, the vehicle may show signs similar to engine overheating. To avoid this, let the engine run while parked, preferably on level ground, with the automatic transmission in P (Park) for a few minutes before turning the engine off. If the overheat warning comes on, see *Engine Overheating* ⇨ *280*.

Parking on Hills

⚠ Warning

Parking the vehicle on a hill with the trailer attached can be dangerous. If something goes wrong, the rig could start to move. People can be injured, and both the vehicle and the trailer can be damaged. When possible, always park the rig on a flat surface.

If parking the rig on a hill:

1. Press the brake pedal, but do not shift into P (Park) yet. Turn the wheels into the curb if facing downhill or into traffic if facing uphill.

2. Have someone place chocks under the trailer wheels.
3. When the wheel chocks are in place, release the regular brakes until the chocks absorb the load.
4. Reapply the brake pedal. Then apply the parking brake and shift into P (Park).
5. Release the brake pedal.

Leaving After Parking on a Hill

1. Apply and hold the brake pedal.
2. Start the engine.
3. Shift into a gear.
4. Release the parking brake.
5. Let up on the brake pedal.
6. Drive slowly until the trailer is clear of the chocks.
7. Stop and have someone pick up and store the chocks.

Maintenance when Trailer Towing

The vehicle needs service more often when pulling a trailer. See *Maintenance Schedule* ⇨ *344*. Things that are especially important in trailer operation are automatic transmission fluid, engine oil, axle lubricant, belts, cooling system, and brake system. It is a good idea to inspect these before and during the trip.

Check periodically to see that all hitch nuts and bolts are tight.

Trailer Towing

Before pulling a trailer, three important considerations have to do with weight:

- Weight of the trailer.
- Weight of the trailer tongue.
- Total weight on your vehicle's tires.

Weight of the Trailer

How heavy can a trailer safely be? It should never weigh more than 454 kg (1,000 lb). But even that can be too heavy.

It depends on how the rig is used. For example, speed, altitude, road grades, outside temperature, and how much the vehicle is used to pull a trailer are all important. It can depend on any special equipment on the vehicle, and the amount of tongue weight the vehicle can carry. See “Weight of the Trailer Tongue” following.

Maximum trailer weight is calculated assuming only the driver is in the tow vehicle and it has all the required trailering equipment. The weight of additional optional equipment, passengers, and cargo in the tow vehicle must be subtracted from the maximum trailer weight.

Ask your dealer for trailering information or advice, or write us at our Customer Assistance Offices. See *Customer Assistance Offices* ⇨ *363*.

Weight of the Trailer Tongue

The tongue load (1) of any trailer is an important weight to measure because it affects the total gross weight of the vehicle. The Gross Vehicle Weight (GVW) includes the curb weight of the vehicle, any cargo carried in it, and the people who will be riding in the vehicle. If there are a lot of options, equipment, passengers, or cargo in the vehicle, it will reduce the tongue weight the vehicle can carry, which will also reduce the trailer weight the vehicle can tow. If towing a trailer, the tongue load must be added to the GVW because the vehicle will be carrying that weight, too. See *Vehicle Load Limits* ⇨ *198*.

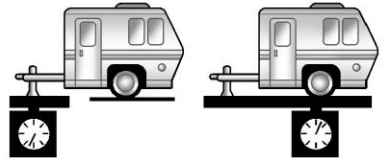

1 2

The trailer tongue (1) should weigh 10% of the total loaded trailer weight (2).

After loading the trailer, weigh the trailer and then the tongue, separately, to see if the weights are proper. If they are not, adjustments might be made by moving some items around in the trailer.

Total Weight on Your Vehicle's Tires

Be sure the vehicle's tires are inflated to the upper limit for cold tires. These numbers can be found on the Tire and Loading Information label. See *Vehicle Load Limits* ⇨ *198*. Make sure not to go over the GVW limit for the vehicle, including the weight of the trailer tongue.

Towing Equipment

Hitches

Use the correct hitch equipment. See your dealer or a hitch dealer for assistance.

- The rear bumper on the vehicle is not intended for hitches. Do not attach rental hitches or other bumper-type hitches to it. Use only a frame-mounted hitch that does not attach to the bumper.
- The frame mounted hitch must be compatible with aluminum.
- Will any holes be made in the body of the vehicle when the trailer hitch is installed? If so, seal the holes when the hitch is removed. If the holes are not sealed, dirt, water, and deadly carbon monoxide (CO) from the exhaust can get into the vehicle. See *Engine Exhaust* ⇨ *209*.

Safety Chains

Always attach chains between the vehicle and the trailer. Cross the safety chains under the tongue of the trailer to help prevent the tongue from contacting the road if it becomes separated from the hitch. Leave enough slack so the rig can turn. Never allow safety chains to drag on the ground.

Trailer Brakes

Does the trailer have its own brakes? Be sure to read and follow the instructions for the trailer brakes so they are installed, adjusted, and maintained properly.

Because the vehicle has antilock brakes, do not tap into the vehicle's brake system. If this is done, both brake systems will not work well or at all.

Conversions and Add-Ons

Add-On Electrical Equipment

⚠ Warning

The Data Link Connector (DLC) is used for vehicle service and Emission Inspection/Maintenance testing. See *Malfunction Indicator Lamp (Check Engine Light)* ⇨ *132*. A device connected to the DLC — such as an aftermarket fleet or driver-behavior tracking device — may interfere with vehicle systems. This could affect vehicle operation and cause a crash. Such devices may also access information stored in the vehicle’s systems.

Caution

Some electrical equipment can damage the vehicle or cause components to not work and would not be covered by the vehicle warranty. Always check with your dealer before adding electrical equipment.

Add-on equipment can drain the vehicle's 12-volt battery, even if the vehicle is not operating.

The vehicle has an airbag system. Before attempting to add anything electrical to the vehicle, see *Servicing the Airbag-Equipped Vehicle* ⇨ *86* and *Adding Equipment to the Airbag-Equipped Vehicle* ⇨ *86*.

Vehicle Care

General Information
General Information 262
California Proposition 65 Warning 262
California Perchlorate Materials Requirements 262
Accessories and Modifications 262

Vehicle Checks
Doing Your Own Service Work 263
Hood 264
Engine Compartment Overview 265
Engine Oil 270
Engine Oil Life System 272
Automatic Transmission Fluid 273
Engine Air Cleaner/Filter 273
Cooling System 275
Engine Coolant 277
Engine Overheating 280
Washer Fluid 281
Brakes 282
Brake Fluid 283
Battery - North America 284
All-Wheel Drive 284
Starter Switch Check 285
Automatic Transmission Shift Lock Control Function Check 285
Park Brake and P (Park) Mechanism Check 286
Wiper Blade Replacement 286
Windshield Replacement 287

Headlamp Aiming
Headlamp Aiming 287

Bulb Replacement
Bulb Replacement 288
LED Lighting 288
License Plate Lamp 288
Replacement Bulbs 289

Electrical System
Electrical System Overload . . . 289
Fuses and Circuit Breakers . . . 290
Engine Compartment Fuse Block 290
Instrument Panel Fuse Block 293
Rear Compartment Fuse Block 295

Wheels and Tires
Tires 299
All-Season Tires 300
Winter Tires 300
Low-Profile Tires 300
Summer Tires 301
Tire Sidewall Labeling 301
Tire Designations 303
Tire Terminology and Definitions 304
Tire Pressure 306
Tire Pressure for High-Speed Operation 308
Tire Pressure Monitor System 308
Tire Pressure Monitor Operation 309
Tire Inspection 312
Tire Rotation 313
When It Is Time for New Tires 314
Buying New Tires 315
Different Size Tires and Wheels 316
Uniform Tire Quality Grading 316
Wheel Alignment and Tire Balance 318
Wheel Replacement 318
Tire Chains 319
If a Tire Goes Flat 320
Tire Changing 321
Compact Spare Tire 326

Jump Starting
Jump Starting - North America 327

Towing the Vehicle
Towing the Vehicle 330
Recreational Vehicle Towing 331

Appearance Care
Exterior Care 333
Interior Care 338
Floor Mats 341

General Information

For service and parts needs, visit your dealer. You will receive genuine GM parts and GM-trained and supported service people.

Genuine GM parts have one of these marks:

California Proposition 65 Warning

WARNING: Most motor vehicles, including this one, contain and/or emit chemicals known to the State of California to cause cancer and birth defects or other reproductive harm. Engine exhaust, many parts and systems, many fluids, and some component wear by-products contain and/or emit these chemicals.

See *Battery - North America* ⇨ *284* and *Jump Starting - North America* ⇨ *327*.

California Perchlorate Materials Requirements

Certain types of automotive applications, such as airbag initiators, safety belt pretensioners, and lithium batteries contained in Remote Keyless Entry transmitters, may contain perchlorate materials. Special handling may be necessary. For additional information, see www.dtsc.ca.gov/hazardouswaste/perchlorate.

Accessories and Modifications

Adding non-dealer accessories or making modifications to the vehicle can affect vehicle performance and safety, including such things as

airbags, braking, stability, ride and handling, emissions systems, aerodynamics, durability, and electronic systems like antilock brakes, traction control, and stability control. These accessories or modifications could even cause malfunction or damage not covered by the vehicle warranty.

Damage to suspension components caused by modifying vehicle height outside of factory settings will not be covered by the warranty.

Damage to vehicle components resulting from modifications or the installation or use of non-GM certified parts, including control module or software modifications, is not covered under the terms of the vehicle warranty and may affect remaining warranty coverage for affected parts.

GM Accessories are designed to complement and function with other systems on the vehicle. See your dealer to accessorize the vehicle using genuine GM Accessories installed by a dealer technician.

Also, see *Adding Equipment to the Airbag-Equipped Vehicle* ⇨ *86*.

Vehicle Checks

Doing Your Own Service Work

⚠ Warning

It can be dangerous to work on your vehicle if you do not have the proper knowledge, service manual, tools, or parts. Always follow owner manual procedures and consult the service manual for your vehicle before doing any service work.

If doing some of your own service work, use the proper service manual. It tells you much more about how to service the vehicle than this manual can. To order the proper service manual, see *Service Publications Ordering Information* ⇨ *370*.

This vehicle has an airbag system. Before attempting to do your own service work, see *Servicing the Airbag-Equipped Vehicle* ⇨ *86*.

Keep a record with all parts receipts and list the mileage and the date of any service work performed. See *Maintenance Records* ⇨ *356*.

Caution

Even small amounts of contamination can cause damage to vehicle systems. Do not allow contaminants to contact the fluids, reservoir caps, or dipsticks.

Hood

⚠ Warning

Gas struts and other hot metal components under the hood can get hot after running the engine. Do not touch as they can burn unprotected skin and could cause serious injury.

Clear any snow from the hood before opening.

To open the hood:

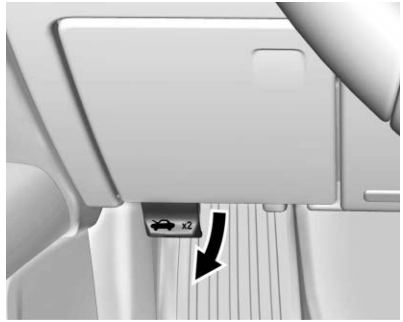

1. Pull the hood release handle. It is on the lower left side of the instrument panel between the door and the steering wheel.
2. Release the handle, then pull the handle again to fully open the hood.
3. Go to the front of the vehicle and lift the hood open.

Caution

Be sure the hood is completely closed before driving. Damage may occur if it is not.

To close the hood:

1. Before closing the hood, be sure all filler caps are properly installed.
2. Lower the hood approximately 46 cm (18 in) from the closed position.
3. Then push the front center of the hood with a swift, firm motion.
4. Check to make sure the hood is closed. If not, release the hood from inside and repeat Steps 1–3.

Engine Compartment Overview

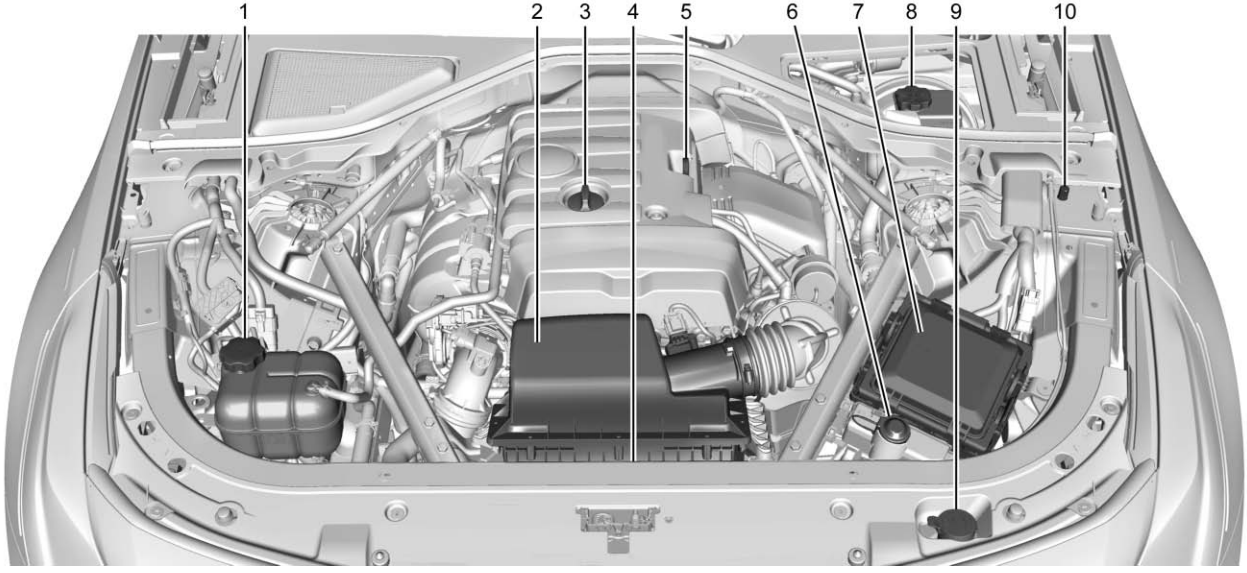

2.0L L4 Engine

1. Engine Coolant Surge Tank and Pressure Cap. See *Cooling System* ⇨ *275*.
2. *Engine Air Cleaner/Filter* ⇨ *273*.
3. Engine Oil Fill Cap. See *Engine Oil* ⇨ *270*.
4. Engine Cooling Fan (Out of View). See *Cooling System* ⇨ *275*.
5. Engine Oil Dipstick. See *Engine Oil* ⇨ *270*.
6. Remote Positive (+) Battery Terminal. See *Jump Starting - North America* ⇨ *327*.
7. *Engine Compartment Fuse Block* ⇨ *290*.
8. Brake Fluid Reservoir (Under Cover). See *Brake Fluid* ⇨ *283*.
9. Windshield Washer Fluid Reservoir. See *Washer Fluid* ⇨ *281*.
10. Remote Negative (-) Battery Terminal. See *Jump Starting - North America* ⇨ *327*.

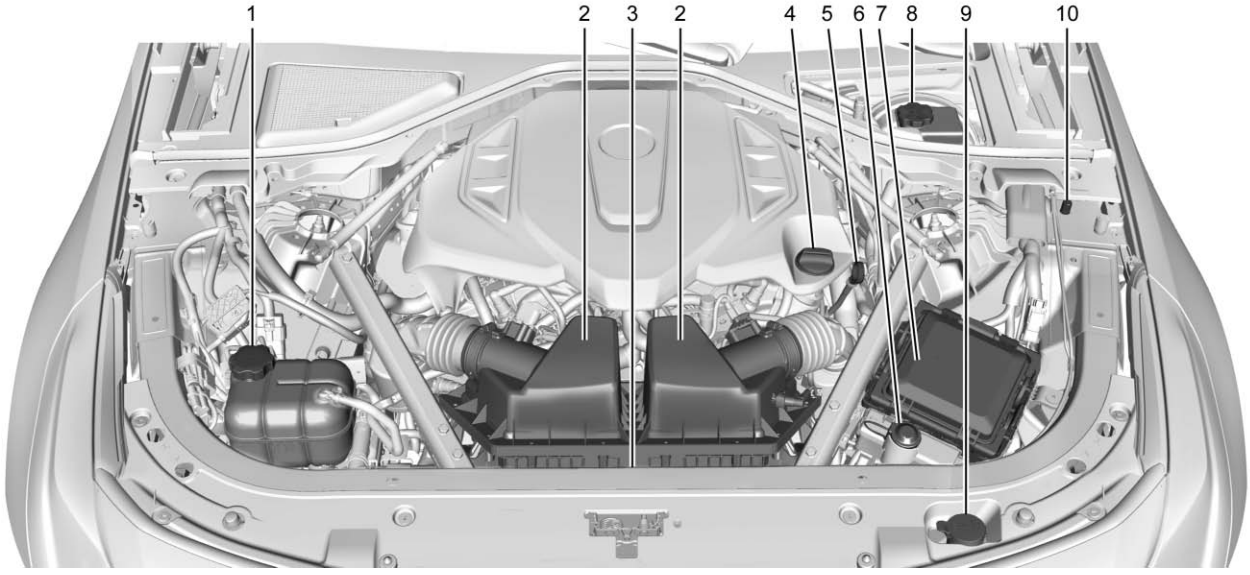

3.0L V6 Twin Turbo Engine

1. Engine Coolant Surge Tank and Pressure Cap. See *Cooling System* ⇨ *275*.
2. *Engine Air Cleaner/Filter* ⇨ *273*.
3. Engine Cooling Fan (Out of View). See *Cooling System* ⇨ *275*.
4. Engine Oil Fill Cap. See *Engine Oil* ⇨ *270*.
5. Engine Oil Dipstick. See *Engine Oil* ⇨ *270*.
6. Remote Positive (+) Battery Terminal. See *Jump Starting - North America* ⇨ *327*.
7. *Engine Compartment Fuse Block* ⇨ *290*.
8. Brake Fluid Reservoir. See *Brake Fluid* ⇨ *283*.
9. Windshield Washer Fluid Reservoir. See *Washer Fluid* ⇨ *281*.
10. Remote Negative (-) Battery Terminal. See *Jump Starting - North America* ⇨ *327*.

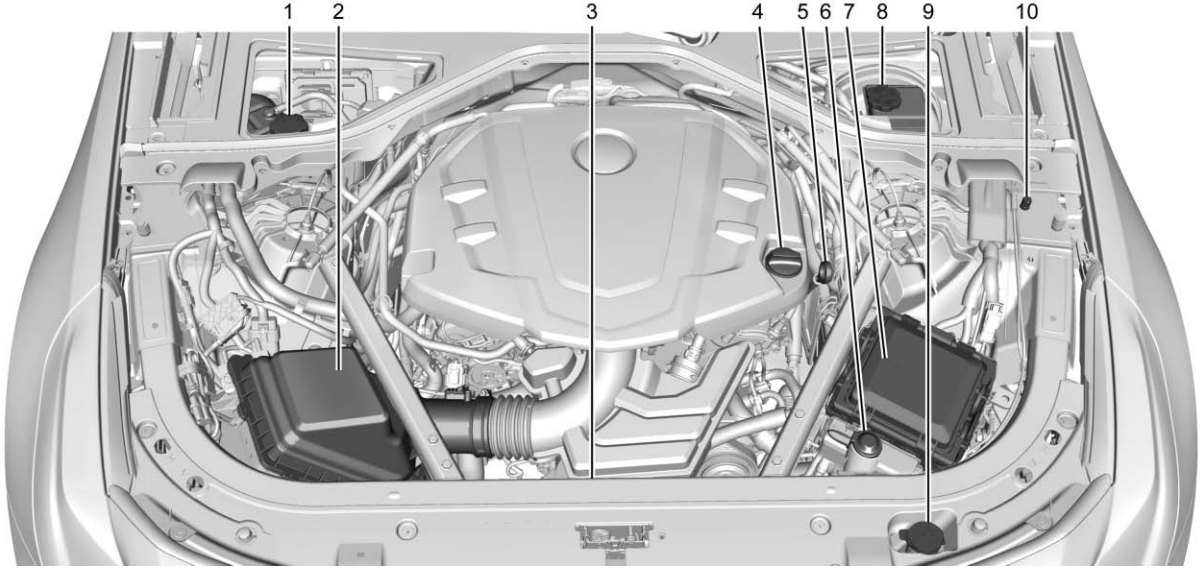

3.6L V6 Engine

1. Engine Coolant Surge Tank and Pressure Cap. See *Cooling System* ⇨ *275*.
2. *Engine Air Cleaner/Filter* ⇨ *273*.
3. Engine Cooling Fan (Out of View). See *Cooling System* ⇨ *275*.
4. Engine Oil Fill Cap. See *Engine Oil* ⇨ *270*.
5. Engine Oil Dipstick. See *Engine Oil* ⇨ *270*.
6. Remote Positive (+) Battery Terminal. See *Jump Starting - North America* ⇨ *327*.
7. *Engine Compartment Fuse Block* ⇨ *290*.
8. Brake Fluid Reservoir. See *Brake Fluid* ⇨ *283*.
9. Windshield Washer Fluid Reservoir. See *Washer Fluid* ⇨ *281*.
10. Remote Negative (-) Battery Terminal. See *Jump Starting - North America* ⇨ *327*.

Engine Oil

To ensure proper engine performance and long life, careful attention must be paid to engine oil. Following these simple, but important steps will help protect your investment:

- Use engine oil approved to the proper specification and of the proper viscosity grade. See “Selecting the Right Engine Oil” in this section.
- Check the engine oil level regularly and maintain the proper oil level. See “Checking Engine Oil” and “When to Add Engine Oil” later in this section.
- Change the engine oil at the appropriate time. See *Engine Oil Life System* ⇨ *272*.
- Always dispose of engine oil properly. See “What to Do with Used Oil” in this section.

Checking Engine Oil

It is a good idea to check the engine oil level at each fuel fill. In order to get an accurate reading, the vehicle must be on level ground. The engine oil dipstick handle is a loop. See *Engine Compartment Overview* ⇨ *265* for the location of the engine oil dipstick.

1. If the engine has been running recently, turn off the engine and allow several minutes for the oil to drain back into the oil pan. Checking the oil level too soon after engine shutoff will not provide an accurate oil level reading.

⚠ Warning

The engine oil dipstick handle may be hot; it could burn you. Use a towel or glove to touch the dipstick handle.

2. Pull out the dipstick and wipe it with a clean paper towel or cloth, then push it back in all the way. Remove it again, keeping the tip down, and check the level.

When to Add Engine Oil

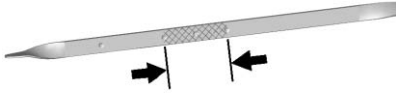

2.0L L4 Engine

3.0L V6 Twin Turbo Engine Shown, 3.6L V6 Engine Similar

If the oil is below the cross-hatched area at the tip of the dipstick, add 1 L (1 qt) of the recommended oil and then recheck the level. See "Selecting the Right Engine Oil" in this section for an explanation of what kind of oil to use. For engine oil crankcase capacity, see *Capacities and Specifications* ⇨ *358*.

Caution

Do not add too much oil. Oil levels above or below the acceptable operating range shown on the dipstick are harmful to the engine. If you find that you have an oil level above the operating range, i.e., the engine has so much oil that the oil level gets above the cross-hatched area that shows the proper operating range, the engine could be damaged. You should drain out the excess oil or limit driving of the vehicle and seek a service professional to remove the excess amount of oil.

See *Engine Compartment Overview* ⇨ *265* for the location of the engine oil fill cap.

Add enough oil to put the level somewhere in the proper operating range. Push the dipstick all the way back in when through.

Selecting the Right Engine Oil

Selecting the right engine oil depends on both the proper oil specification and viscosity grade. See *Recommended Fluids and Lubricants* ⇨ *353*.

Specification

Ask for and use engine oils that meet the dexos1™ specification. Engine oils that have been approved by GM as meeting the dexos1 specification are marked with the dexos1 approved logo. See www.gmdexos.com.

Caution

Failure to use the recommended engine oil or equivalent can result in engine damage not covered by the vehicle warranty.

Viscosity Grade

Use SAE 5W-30 viscosity grade engine oil.

Cold Temperature Operation: In an area of extreme cold, where the temperature falls below −29 °C (−20 °F), an SAE 0W-30 oil may be used. An oil of this viscosity grade will provide easier cold starting for the engine at extremely low temperatures. When selecting an oil of the appropriate viscosity grade, it is recommended to select an oil of the correct specification. See “Specification” earlier in this section.

Engine Oil Additives/Engine Oil Flushes

Do not add anything to the oil. The recommended oils meeting the dexos1 specification are all that is needed for good performance and engine protection.

Engine oil system flushes are not recommended and could cause engine damage not covered by the vehicle warranty.

What to Do with Used Oil

Used engine oil contains certain elements that can be unhealthy for your skin and could even cause cancer. Do not let used oil stay on your skin for very long. Clean your skin and nails with soap and water, or a good hand cleaner. Wash or properly dispose of clothing or rags containing used engine oil. See the manufacturer's warnings about the use and disposal of oil products.

Used oil can be a threat to the environment. If you change your own oil, be sure to drain all the oil from the filter before disposal. Never dispose of oil by putting it in the trash or pouring it on the ground, into sewers, or into streams or bodies of water. Recycle it by taking it to a place that collects used oil.

Engine Oil Life System

When to Change Engine Oil

This vehicle has a computer system that indicates when to change the engine oil and filter. This is based on a combination of factors which include engine revolutions, engine temperature, and miles driven. Based on driving conditions, the mileage at which an oil change is indicated can vary considerably. For the oil life system to work properly, the system must be reset every time the oil is changed.

When the system has calculated that oil life has been diminished, it indicates that an oil change is necessary. A CHANGE ENGINE OIL SOON message comes on. See *Engine Oil Messages* ⇨ *149*. Change the oil as soon as possible within the next 1 000 km (600 mi). It is possible that, if driving under the best conditions, the oil life system might indicate that an oil change is not necessary for up to a year. The engine oil and filter must be changed at least once a year and at this time the system must be reset. Your dealer has trained service people who will perform this work and reset the system. It is also important to check the oil regularly over the course of an oil drain interval and keep it at the proper level.

If the system is ever reset accidentally, the oil must be changed at 5 000 km (3,000 mi) since the last oil change. Remember to reset the oil life system whenever the oil is changed.

How to Reset the Engine Oil Life System

Reset the system whenever the engine oil is changed so that the system can calculate the next engine oil change. To reset the system:

1. Using the DIC buttons, display REMAINING OIL LIFE on the DIC. See *Driver Information Center (DIC)* ⇨ *140* and *Engine Oil Messages* ⇨ *149*.
2. Press and hold SEL to clear the CHANGE ENGINE OIL SOON message and reset the oil life at 100%.

   Be careful not to reset the oil life display accidentally at any time other than after the oil is changed. It cannot be reset accurately until the next oil change.

The oil life system can also be reset as follows:

1. Turn the ignition on with the engine off.
2. Fully press and release the accelerator pedal three times within five seconds.

   If the CHANGE ENGINE OIL SOON message is not on, the system is reset.

The system is reset when the CHANGE ENGINE OIL SOON message is off.

If the CHANGE ENGINE OIL SOON message comes back on when the vehicle is started, the engine oil life system has not been reset. Repeat the procedure.

Automatic Transmission Fluid

How to Check Automatic Transmission Fluid

It is not necessary to check the transmission fluid level.
A transmission fluid leak is the only reason for fluid loss. If a leak occurs, take the vehicle to your dealer and have it repaired as soon as possible.

The vehicle is not equipped with a transmission fluid level dipstick. There is a special procedure for checking and changing the transmission fluid. Because this procedure is difficult, this should be done at the dealer. Contact your dealer for additional information.

Change the fluid and filter at the intervals listed in *Maintenance Schedule* ⇨ *344*, and be sure to use the fluid listed in *Recommended Fluids and Lubricants* ⇨ *353*.

Engine Air Cleaner/Filter

The engine air cleaner/filter is in the engine compartment. See *Engine Compartment Overview* ⇨ *265*.

When to Inspect the Engine Air Cleaner/Filter

For intervals on changing and inspecting the engine air cleaner/filter, see *Maintenance Schedule* ⇨ *344*.

How to Inspect the Engine Air Cleaner/Filter

Do not start the engine or have the engine running with the engine air cleaner/filter housing open. Before removing the engine air cleaner/filter, make sure that the engine air cleaner/filter housing and nearby components are free of dirt and debris. Remove the engine air cleaner/filter. Lightly tap and shake the engine air cleaner/filter (away from the vehicle), to release loose dust and dirt. Inspect the engine air cleaner/filter for damage, and replace if damaged. Do not clean the engine air cleaner/filter or components with water or compressed air.

To inspect or replace the engine air cleaner/filter:

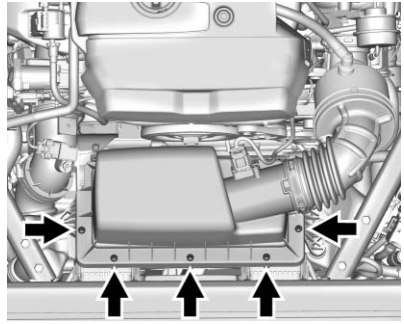

2.0L L4 Engine

1. Remove the five screws on top of the engine air cleaner/filter cover.
2. Lift the engine air cleaner/filter cover open on the hinge.
3. Lift and remove the engine air cleaner/filter.
4. Inspect or replace the engine air cleaner/filter.
5. Reverse Steps 1–3 to reinstall the engine air cleaner/filter cover.

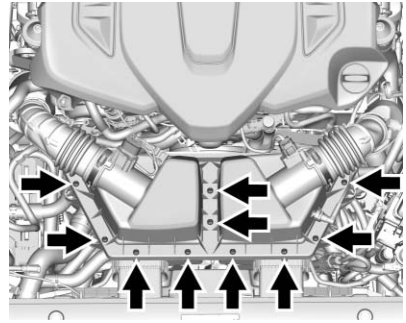

3.0L V6 Twin Turbo Engine

1. Remove the 10 screws on top of the engine air cleaner/filter cover to gain access to both air cleaner/filters.
2. Lift the engine air cleaner/filter cover open on the hinge.
3. Lift and remove one or both engine air cleaner/filters.
4. Inspect or replace one or both engine air cleaner/filters.
5. Reverse Steps 1–3 to reinstall the engine air cleaner/filter cover.

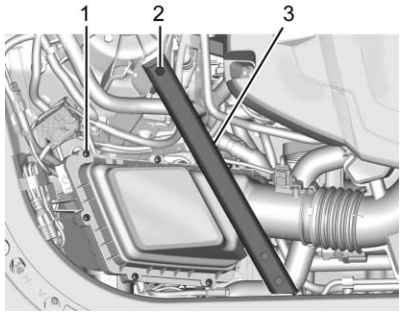

3.6L V6 Engine

1. Screws (6)
2. Bolts (3)
3. Diagonal Brace

1. Remove the three bolts (2) and the diagonal brace (3).
2. Remove the six screws (1) on top of the engine air cleaner/filter cover.
3. Lift the engine air cleaner/filter cover open on the hinge.
4. Lift and remove the engine air cleaner/filter.
5. Inspect or replace the engine air cleaner/filter.
6. Reverse Steps 1–4 to reinstall the engine air cleaner/filter cover and diagonal brace.

⚠ Warning

Operating the engine with the air cleaner/filter off can cause you or others to be burned. The air cleaner not only cleans the air; it helps to stop flames if the engine backfires. Use caution when working on the engine and do not drive with the air cleaner/filter off.

Caution

If the air cleaner/filter is off, dirt can easily get into the engine, which could damage it. Always have the air cleaner/filter in place when you are driving.

Cooling System

The cooling system allows the engine to maintain the correct working temperature.

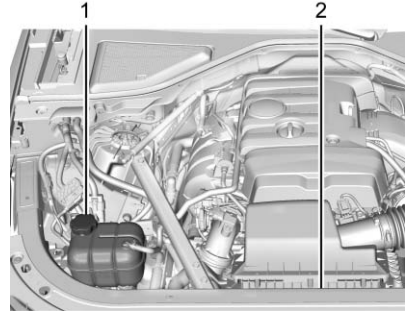

2.0L L4 Engine

1. Engine Coolant Surge Tank and Pressure Cap
2. Engine Cooling Fan (Out of View)

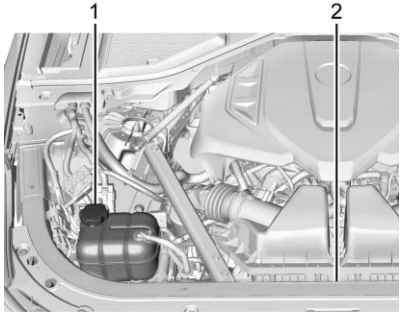

3.0L V6 Twin Turbo Engine

1. Engine Coolant Surge Tank and Pressure Cap
2. Engine Cooling Fan (Out of View)

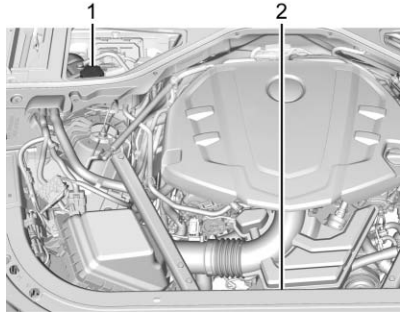

3.6L V6 Engine

1. Engine Coolant Surge Tank and Pressure Cap
2. Engine Cooling Fan (Out of View)

⚠ Warning

An electric engine cooling fan under the hood can start up even when the engine is not running and can cause injury. Keep hands, clothing, and tools away from any underhood electric fan.

⚠ Warning

Heater and radiator hoses, and other engine parts, can be very hot. Do not touch them. If you do, you can be burned.

Do not run the engine if there is a leak. If you run the engine, it could lose all coolant. That could cause an engine fire, and you could be burned. Get any leak fixed before you drive the vehicle.

Caution

Using coolant other than DEX-COOL® can cause premature engine, heater core, or radiator corrosion. In addition, the engine coolant could require changing sooner. Any repairs would not be covered by the vehicle warranty. Always use DEX-COOL (silicate-free) coolant in the vehicle.

Engine Coolant

The cooling system in the vehicle is filled with DEX-COOL® engine coolant. This coolant needs to be checked and replaced at appropriate intervals. See *Maintenance Schedule* ⇨ *344*.

The following explains the cooling system and how to check and add coolant when it is low. If there is a problem with engine overheating, see *Engine Overheating* ⇨ *280*.

What to Use

⚠ Warning

Adding only plain water or some other liquid to the cooling system can be dangerous. Plain water and other liquids, can boil before the proper coolant mixture will. The coolant warning system is set for the proper coolant mixture. With plain water or the wrong mixture, the engine could get too hot but you would not get the

(Continued)

Warning (Continued)

overheat warning. The engine could catch fire and you or others could be burned. Use a 50/50 mixture of clean, drinkable water and DEX-COOL coolant.

Use a 50/50 mixture of clean, drinkable water and DEX-COOL coolant. If using this mixture, nothing else needs to be added. This mixture:

- Gives freezing protection down to −37 °C (−34 °F), outside temperature.
- Gives boiling protection up to 129 °C (265 °F), engine temperature.
- Protects against rust and corrosion.
- Will not damage aluminum parts.
- Helps keep the proper engine temperature.

Caution

If improper coolant mixture, inhibitors, or additives are used in the vehicle cooling system, the engine could overheat and be damaged. Too much water in the mixture can freeze and crack engine cooling parts. The repairs would not be covered by the vehicle warranty. Use only the proper mixture of engine coolant for the cooling system. See *Recommended Fluids and Lubricants* ⇨ *353*.

Never dispose of engine coolant by putting it in the trash, pouring it on the ground, or into sewers, streams, or bodies of water. Have the coolant changed by an authorized service center, familiar with legal requirements regarding used coolant disposal. This will help protect the environment and your health.

Checking Coolant

The vehicle must be on a level surface when checking the coolant level.

2.0L L4 and 3.0L V6 Engine Coolant Surge Tank

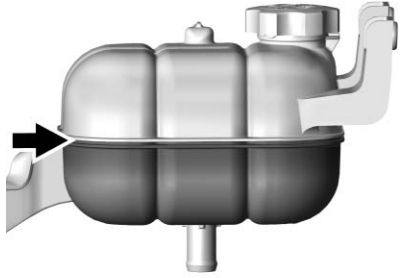

3.6L V6 Engine Coolant Surge Tank

Check to see if coolant is visible in the coolant surge tank. If the coolant inside the coolant surge tank is boiling, do not do anything else until it cools down. See *Engine Overheating* ⇨ *280*.

The coolant surge tank is in the engine compartment on the passenger side of the vehicle. See *Engine Compartment Overview* ⇨ *265*.

How to Add Coolant to the Coolant Surge Tank

Caution

This vehicle has a specific coolant fill procedure. Failure to follow this procedure could cause the engine to overheat and be severely damaged.

If no problem is found, check to see if coolant is visible in the coolant surge tank. If coolant is visible but the coolant level mark is not visible, add a 50/50 mixture of clean, drinkable water and DEX-COOL coolant at the coolant surge tank to the top rib on the middle of the tank, but be sure the cooling system, including the coolant surge tank pressure cap, is cool before this is done. See *Engine Overheating* ⇨ *280*.

⚠ Warning

Steam and scalding liquids from a hot cooling system can blow out and burn you badly. Never turn the cap when the cooling system, including the surge tank pressure cap, is hot. Wait for the cooling system and surge tank pressure cap to cool.

⚠ Warning

Adding only plain water or some other liquid to the cooling system can be dangerous. Plain water and other liquids, can boil before the proper coolant mixture will. The coolant warning system is set for the proper coolant mixture. With plain water or the wrong mixture, the engine could get too hot but you would not get the overheat warning. The engine could catch fire and you or others

(Continued)

Warning (Continued)

could be burned. Use a 50/50 mixture of clean, drinkable water and DEX-COOL coolant.

Caution

In cold weather, water can freeze and crack the engine, radiator, heater core, and other parts. Use the recommended coolant and the proper coolant mixture.

⚠ Warning

You can be burned if you spill coolant on hot engine parts. Coolant contains ethylene glycol and it will burn if the engine parts are hot enough. Do not spill coolant on a hot engine.

1. Remove the coolant surge tank pressure cap when the cooling system, including the coolant surge tank pressure cap and upper radiator hose, is no longer hot.

   Turn the pressure cap slowly counterclockwise about one-quarter of a turn. If you hear a hiss, wait for that to stop. This will allow any pressure still left to be vented out the discharge hose.

2. Keep turning the pressure cap slowly and remove it.

3. Fill the coolant surge tank with the proper mixture to the indicated level mark.

4. With the coolant surge tank pressure cap off, start the engine and let it run until you can feel the upper radiator hose getting hot. Watch out for the engine cooling fan.

   By this time, the coolant level inside the coolant surge tank may be lower. If the level is lower, add more of the proper mixture to the coolant surge tank until the level reaches the indicated level mark.

5. Replace the pressure cap tightly.
6. Verify coolant level after the engine is shut off and the coolant is cold. If necessary, repeat coolant fill procedure Steps 1–6.

   If the coolant still is not at the proper level when the system cools down again, see your dealer.

Caution

If the pressure cap is not tightly installed, coolant loss and possible engine damage may occur. Be sure the cap is properly and tightly secured.

Engine Overheating

The vehicle has several indicators to warn of the engine overheating.

There is an engine coolant temperature gauge and an engine coolant temperature warning light on the instrument cluster. See *Engine Coolant Temperature Gauge* ⇨ *128* and *Engine Coolant Temperature Warning Light* ⇨ *137*. The vehicle may also display a message on the Driver Information Center (DIC). See *Engine Cooling System Messages* ⇨ *149*.

If the decision is made not to lift the hood when this warning appears, get service help right away. See *Roadside Service* ⇨ *364*.

If the decision is made to lift the hood, make sure the vehicle is parked on a level surface. Then check to see if the engine cooling fan is running. If the engine is overheating, the fan should be running. If it is not, do not continue to run the engine. Have the vehicle serviced.

Caution

Running the engine without coolant may cause damage or a fire. Vehicle damage would not be covered by the vehicle warranty.

If Steam Is Coming from the Engine Compartment

⚠ Warning

Steam from an overheated engine can burn you badly, even if you just open the hood. Stay away from the engine if you see or hear steam coming from it. Just turn it off and get everyone away from the vehicle until it cools down. Wait until there is no sign of steam or coolant before you open the hood.

If you keep driving when the engine is overheated, the liquids in it can catch fire. You or others could be badly burned. Stop the engine if it overheats, and get out of the vehicle until the engine is cool.

If No Steam Is Coming from the Engine Compartment

If an engine overheat warning is displayed but no steam can be seen or heard, the problem may not be

too serious. Sometimes the engine can get a little too hot when the vehicle:

- Climbs a long hill on a hot day.
- Stops after high-speed driving.
- Idles for long periods in traffic.

If the overheat warning is displayed with no sign of steam:

1. Turn the air conditioning off.
2. Turn the heater on to the highest temperature and to the highest fan speed. Open the windows as necessary.
3. When it is safe to do so, pull off the road, shift to P (Park) or N (Neutral), and let the engine idle.

If the engine coolant temperature gauge is no longer in the overheated area or the engine coolant temperature warning light no longer displays, the vehicle can be driven. Continue to drive the vehicle slowly for about 10 minutes. Keep a safe distance from the vehicle in front. If the warning does not come back on, continue to drive normally and have the cooling system checked for proper fill and function.

If the warning continues, pull over, stop, and park the vehicle right away.

If there is no sign of steam, idle the engine for three minutes while parked. If the warning is still displayed, turn off the engine until it cools down.

Washer Fluid

What to Use

When windshield washer fluid is needed, be sure to read the manufacturer's instructions before use. If operating the vehicle in an area where the temperature may fall below freezing, use a fluid that has sufficient protection against freezing.

Adding Washer Fluid

Open the cap with the washer symbol on it. Add washer fluid until the tank is full. See *Engine Compartment Overview* ⇨ *265* for reservoir location.

Caution

- Do not use washer fluid that contains any type of water repellent coating. This can cause the wiper blades to chatter or skip.
- Do not use engine coolant (antifreeze) in the windshield washer. It can damage the windshield washer system and paint.

(Continued)

Caution (Continued)

- Do not mix water with ready-to-use washer fluid. Water can cause the solution to freeze and damage the washer fluid tank and other parts of the washer system.
- When using concentrated washer fluid, follow the manufacturer instructions for adding water.
- Fill the washer fluid tank only three-quarters full when it is very cold. This allows for fluid expansion if freezing occurs, which could damage the tank if it is completely full.

Brakes

Disc brake pads have built-in wear indicators that make a high-pitched warning sound when the brake pads are worn and new pads are needed. The sound can come and go or can be heard all the time when the vehicle is moving, except when applying the brake pedal firmly.

⚠ Warning

The brake wear warning sound means that soon the brakes will not work well. That could lead to a crash. When the brake wear warning sound is heard, have the vehicle serviced.

Caution

Continuing to drive with worn-out brake pads could result in costly brake repair.

Some driving conditions or climates can cause a brake squeal when the brakes are first applied or lightly applied. This does not mean something is wrong with the brakes.

Properly torqued wheel nuts are necessary to help prevent brake pulsation. When tires are rotated, inspect brake pads for wear and evenly tighten wheel nuts in the proper sequence to torque specifications. See *Capacities and Specifications* ⇨ *358*.

Brake pads should be replaced as complete sets.

Brake Pedal Travel

See your dealer if the brake pedal does not return to normal height, or if there is a rapid increase in pedal travel. This could be a sign that brake service may be required.

Replacing Brake System Parts

Always replace brake system parts with new, approved replacement parts. If this is not done, the brakes may not work properly. The braking performance expected can change in many other ways if the wrong replacement brake parts are installed or if parts are improperly installed.

Brake Fluid

The brake master cylinder reservoir is filled with GM approved DOT 3 brake fluid as indicated on the reservoir cap. See *Engine Compartment Overview* ⇨ *265* for the location of the reservoir.

Checking Brake Fluid

With the vehicle in P (Park) on a level surface, the brake fluid level should be between the minimum and maximum marks on the brake fluid reservoir.

There are only two reasons why the brake fluid level in the reservoir may go down:

- Normal brake lining wear. When new linings are installed, the fluid level goes back up.
- A fluid leak in the brake hydraulic system. Have the brake hydraulic system fixed. With a leak, the brakes will not work well.

Always clean the brake fluid reservoir cap and the area around the cap before removing it.

Do not top off the brake fluid. Adding fluid does not correct a leak. If fluid is added when the linings are worn, there will be too much fluid when new brake linings are installed. Add or remove fluid, as necessary, only when work is done on the brake hydraulic system.

⚠ Warning

If too much brake fluid is added, it can spill on the engine and burn, if the engine is hot enough. You or others could be burned, and the vehicle could be damaged. Add brake fluid only when work is done on the brake hydraulic system.

When the brake fluid falls to a low level, the brake warning light comes on. See *Brake System Warning Light* ⇨ *133*.

Brake fluid absorbs water over time which degrades the effectiveness of the brake fluid. Replace brake fluid at the specified intervals to prevent increased stopping distance. See *Maintenance Schedule* ⇨ *344*.

What to Add

Use only GM approved DOT 3 brake fluid from a clean, sealed container. See *Recommended Fluids and Lubricants* ⇨ *353*.

⚠ Warning

The wrong or contaminated brake fluid could result in damage to the brake system. This could result in the loss of braking leading to a possible injury. Always use the proper GM approved brake fluid.

Caution

If brake fluid is spilled on the vehicle's painted surfaces, the paint finish can be damaged. Immediately wash off any painted surface.

Battery - North America

The original equipment battery is maintenance free. Do not remove the cap and do not add fluid.

Refer to the replacement number shown on the original battery label when a new 12-volt battery is needed.

The battery is in the trunk under the spare tire. The vehicle has an Absorbed Glass Mat (AGM) 12-volt battery. Installation of a standard 12-volt battery will result in reduced 12-volt battery life.

When using a 12-volt battery charger on the 12-volt AGM battery, some chargers have an AGM battery setting on the charger. If available, use the AGM setting on the charger, to limit charge voltage to 14.8 volts.

Stop/Start System

The vehicle has a Stop/Start system to shut off the engine to help conserve fuel. See *Starting the Engine* ⇨ *204*.

⚠ Warning

WARNING: Battery posts, terminals, and related accessories contain lead and lead compounds, chemicals known to the State of California to cause cancer and birth defects or other reproductive harm. Batteries also contain other chemicals known to the State of California to cause cancer. **WASH HANDS AFTER HANDLING.**

See *California Proposition 65 Warning* ⇨ *262*.

Vehicle Storage

⚠ Warning

Batteries have acid that can burn you and gas that can explode. You can be badly hurt if you are not careful. See *Jump Starting - North America* ⇨ *327* for tips on working around a battery without getting hurt.

Infrequent Usage: Remove the 12-volt battery black, negative (−) cable from the battery to keep the battery from running down.

Extended Storage: Remove the 12-volt battery black, negative (−) cable from the battery or use a battery trickle charger.

Remember to reconnect the battery when ready to drive the vehicle.

All-Wheel Drive

If the vehicle is equipped with All-Wheel Drive (AWD), this is an additional system that needs lubrication.

Transfer Case

When to Check Lubricant

It is not necessary to regularly check the transfer case fluid unless a leak is suspected or an unusual noise is heard. A fluid loss could indicate a problem. Have it inspected and repaired.

How to Check Lubricant

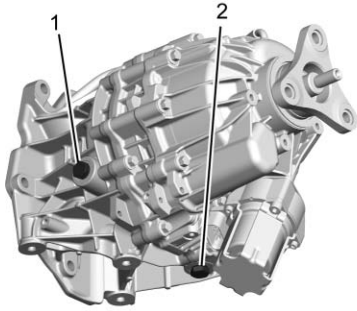

1. Fill Plug
2. Drain Plug

To get an accurate reading, the vehicle should be on a level surface.

If the level is below the bottom of the fill plug hole on the transfer case, some lubricant will need to be added. Add enough lubricant to raise the level to the bottom of the fill plug hole. Use care not to overtighten the fill plug.

What to Use

To determine what kind of lubricant to use, see *Recommended Fluids and Lubricants* ⇨ *353*.

Starter Switch Check

⚠ Warning

When you are doing this inspection, the vehicle could move suddenly. If the vehicle moves, you or others could be injured.

1. Before starting this check, be sure there is enough room around the vehicle.
2. Firmly apply both the parking brake and the regular brake. Do not use the accelerator pedal, and be ready to turn off the engine immediately if it starts.
3. Try to start the engine in each gear. The vehicle should start only in P (Park) or N (Neutral). If the vehicle starts in any other position, contact your dealer for service.

Automatic Transmission Shift Lock Control Function Check

⚠ Warning

When you are doing this inspection, the vehicle could move suddenly. If the vehicle moves, you or others could be injured.

1. Before starting this check, be sure there is enough room around the vehicle. It should be parked on a level surface.

2. Firmly apply the parking brake. See *Electric Parking Brake* ⇨ *214*.

   Be ready to apply the regular brake immediately if the vehicle begins to move.

3. With the engine off, turn the ignition on, but do not start the engine. Without applying the regular brake, try to move the shift lever out of P (Park) with normal effort. If the shift lever moves out of P (Park), contact your dealer for service.

Park Brake and P (Park) Mechanism Check

⚠ Warning

When you are doing this check, the vehicle could begin to move. You or others could be injured and property could be damaged. Make sure there is room in front of the vehicle in case it begins to

(Continued)

Warning (Continued)

roll. Be ready to apply the regular brake at once should the vehicle begin to move.

Park on a fairly steep hill, with the vehicle facing downhill. Keeping your foot on the regular brake, set the parking brake.

- To check the parking brake's holding ability: With the engine running and the transmission in N (Neutral), slowly remove foot pressure from the regular brake pedal. Do this until the vehicle is held by the parking brake only.
- To check the P (Park) mechanism's holding ability: With the engine running, shift to P (Park). Then release the parking brake followed by the regular brake.

Contact your dealer if service is required.

Wiper Blade Replacement

Windshield wiper blades should be inspected for wear or cracking.

For the proper type and size, see *Maintenance Replacement Parts* ⇨ *354*.

To replace the wiper blade assembly:

1. Pull the windshield wiper assembly away from the windshield.

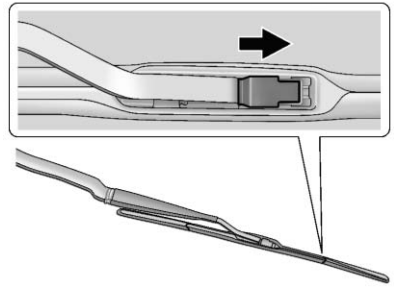

2. Lift up on the latch in the middle of the wiper blade where the wiper arm attaches.

3. With the latch open, pull the wiper blade down toward the windshield far enough to release it from the J-hooked end of the wiper arm.
4. Remove the wiper blade.

Caution

Allowing the wiper arm to touch the windshield when no wiper blade is installed could damage the windshield. Any damage that occurs would not be covered by the vehicle warranty. Do not allow the wiper arm to touch the windshield.

5. Reverse Steps 1–3 for wiper blade replacement.

Windshield Replacement

HUD System

The windshield is part of the HUD system. If the windshield must be replaced, get one that is designed for HUD or the HUD image may look out of focus.

Driver Assistance Systems

When a windshield replacement is needed and the vehicle is equipped with a front-looking camera sensor for the Driver Assistance Systems, the windshield must be installed according to GM specifications for these systems to work properly. If it is not, there may be unexpected behavior and/or messages from these systems. See *Object Detection System Messages* ⇨ *151*.

Headlamp Aiming

Headlamp aim has been preset and should need no further adjustment.

If the vehicle is damaged in a crash, the headlamp aim may be affected. If adjustment to the headlamps is necessary, see your dealer.

Bulb Replacement

For the proper type of replacement bulbs, see *Replacement Bulbs* ⇨ *289*.

For any bulb-changing procedure not listed in this section, contact your dealer.

LED Lighting

This vehicle has several LED lamps. For replacement of any LED lighting assembly not listed here, contact your dealer.

License Plate Lamp

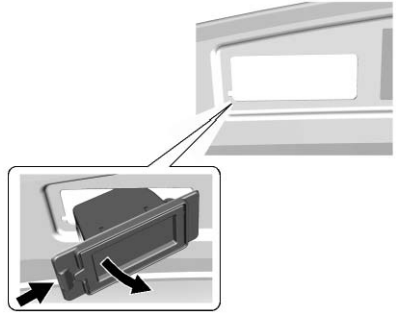

Lamp Assembly

To replace one of these lamps:

1. Push the lamp assembly toward the center of the vehicle.
2. Pull the lamp assembly down to expose the LED connector.
3. Pull the retaining tab on the LED connector up to release the lamp assembly. Remove the lamp assembly.
4. Install the new lamp assembly on the LED connector. Push in the retaining tab to lock in place.
5. Push the lamp assembly back into position until the release tab locks into place.

Replacement Bulbs

Exterior Lamp	Bulb Number
License Plate Lamp	13588150

For replacement bulbs not listed here, contact your dealer.

Electrical System

Electrical System Overload

The vehicle has fuses and circuit breakers to protect against an electrical system overload.

When the current electrical load is too heavy, the circuit breaker opens and closes, protecting the circuit until the current load returns to normal or the problem is fixed. This greatly reduces the chance of circuit overload and fire caused by electrical problems.

Fuses and circuit breakers protect power devices in the vehicle.

Replace a bad fuse with a new one of the identical size and rating.

If there is a problem on the road and a fuse needs to be replaced, the same amperage fuse can be borrowed. Choose some feature of the vehicle that is not needed to use and replace it as soon as possible.

Headlamp Wiring

An electrical overload may cause the lamps to go on and off, or in some cases to remain off. Have the headlamp wiring checked right away if the lamps go on and off or remain off.

Windshield Wipers

If the wiper motor overheats due to heavy snow or ice, the windshield wipers will stop. Wiper function is available immediately after the wiper switch is set to off, and back to on.

To protect the wiper motor from overheating, the wipers may slow down when the windshield is dry for a long period of time. If a period of dry operation, or little moisture, exceeds 10 minutes, the wipers may switch to intermittent operation, and remain there. When moisture is again detected on the windshield, wiper operation will return to the operator selected speed.

Although the circuit is protected from electrical overload, overload due to heavy snow or ice may cause wiper linkage damage.

Always clear ice and heavy snow from the windshield before using the windshield wipers.

If the overload is caused by an electrical problem and not snow or ice, be sure to get it fixed.

Fuses and Circuit Breakers

The wiring circuits in the vehicle are protected from short circuits by a combination of fuses and circuit breakers. This greatly reduces the chance of damage caused by electrical problems.

To check a fuse, look at the silver-colored band inside the fuse. If the band is broken or melted, replace the fuse. Be sure to replace a bad fuse with a new one of the identical size and rating.

Fuses of the same amperage can be temporarily borrowed from another fuse location, if a fuse goes out. Replace the fuse as soon as possible.

To identify and check fuses, circuit breakers, and relays, see *Engine Compartment Fuse Block* ⇨ *290*, *Instrument Panel Fuse Block* ⇨ *293*, and *Rear Compartment Fuse Block* ⇨ *295*.

Engine Compartment Fuse Block

The underhood fuse block is on the driver side of the engine compartment.

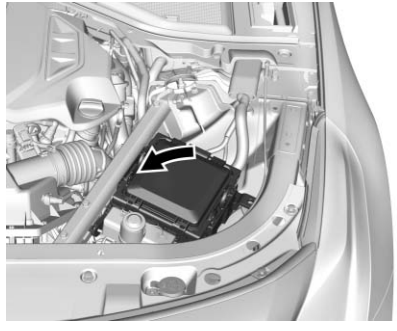

Lift the fuse block cover to access the fuses.

The vehicle may not be equipped with all of the fuses and relays shown.

Caution
Spilling liquid on any electrical component on the vehicle may damage it. Always keep the covers on any electrical component.

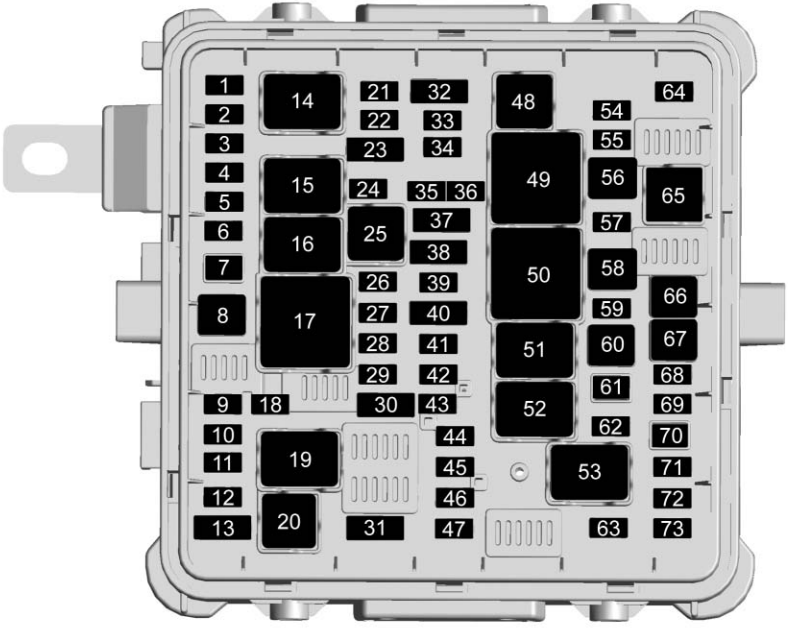

Number	Usage
1	Traction power inverter 2
2	Power coolant pump
3	–
4	Traction power inverter 1
5	Transmission/ Ignition
6	–
7	Starter 2
8	Starter 1
9	Horn
10	–
11	Right LED
12	Left LED
13	Left and right high-beam headlamps
14	A/C control relay
15	Starter 2 relay
16	Starter 1 relay
17	Run/Crank relay
18	Right cornering LED
19	Headlamp low-beam relay

Number	Usage
20	High-beam headlamp relay
21	A/C clutch
22	–
23	Coolant heater control module
24	Coolant pump
25	Coolant pump relay
26	HI fuel
27	Steering column lock
28	Rear heated seats
29	Front heated seats
30	–
31	LED LGT BAT
32	A/C control module/–
33	AIR solenoid
34	–
35	Engine control module
36	Engine control module 2
37	Coolant pump/ Ignition coils–odd
38	Ignition coils–even/ Non walk 2
39	Non walk
40	Instrument cluster
41	–
42	Fuel pump power module
43	Instrument panel body/Ignition
44	Aeroshutter
45	Washer
46	Front sensor
47	Left cornering LED
48	AIR solenoid relay
49	Air pump relay
50	Engine control module relay
51	Wiper speed relay
52	Wiper control relay
53	Headlamp control relay
54	–
55	–
56	Air pump
57	–
58	Instrument panel electronic center
59	–
60	ABS pump
61	Front wiper
62	Headlamp leveling
63	Electric brake booster module
64	–
65	–
66	Transfer case control module
67	Electric brake booster

Number	Usage
68	Rear seat entertainment display
69	–
70	–
71	ABS valve
72	–
73	–

Instrument Panel Fuse Block

The instrument panel fuse block is behind the driver side instrument panel storage compartment.

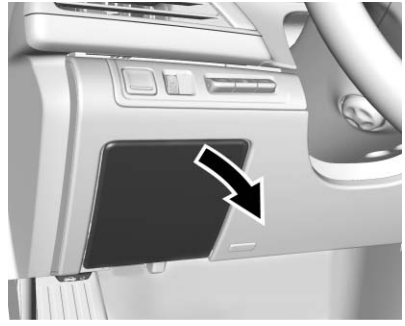

The storage compartment has a press to open latch. To access the fuses, open the compartment by pressing and releasing near the top center square.

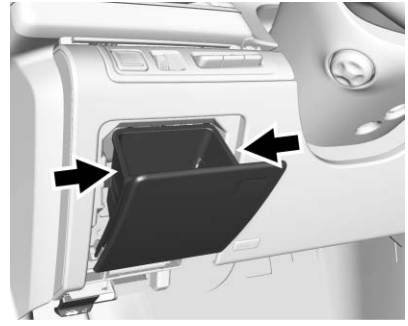

Apply pressure to the two retaining tabs on the sides of the compartment, until the two retaining tabs clear the sides of the instrument panel. Allow the compartment to move downward, and out of the way.

To reinstall the compartment, reverse the steps.

The vehicle may not be equipped with all of the fuses and relays shown.

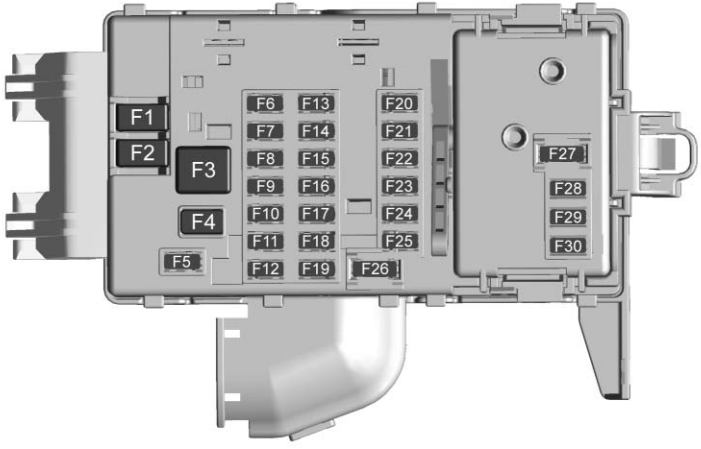

Fuses	Usage
F1	Power outlet
F2	Visor
F3	Front blower
F4	Body control module 8
F5	Power steering column

Fuses	Usage
F6	Column lock
F7	Glove box door
F8	Front heated seat module
F9	Sensing and diagnostic module
F10	Body control module 4

Fuses	Usage
F11	Body control module 3
F12	Data link connector
F13	–
F14	–
F15	Rear vision camera
F16	Display
F17	HVAC control
F18	OnStar
F19	–
F20	Lane departure warning
F21	–
F22	INFO 2
F23	Central gateway module
F24	INFO 1
F25	Video processing module
F26	Steering wheel controls
F27	USB charge port

Fuses	Usage
F28	Wireless charger
F29	–
F30	Speaker

Rear Compartment Fuse Block

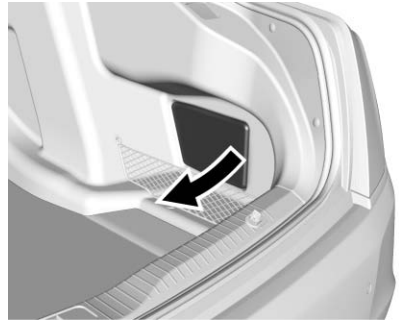

The rear compartment fuse block is behind a cover on the passenger side of the rear compartment.

The vehicle may not be equipped with all of the fuses, relays, and features shown.

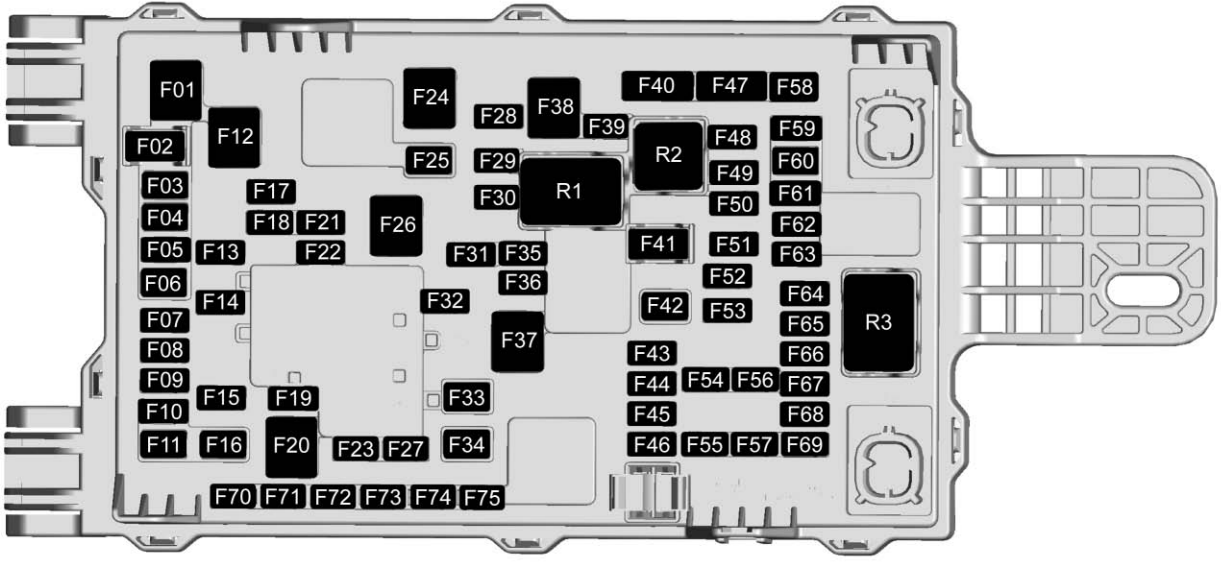

Fuse	Usage
F01	UCAP
F02	Trunk power outlet
F03	Driver window motor

Fuse	Usage
F04	–
F05	Canister vent
F06	Right rear memory seat

Fuse	Usage
F07	Body control module 7
F08	Driver seat adjustment switch

Fuse	Usage
F09	Passive entry/ Passive start
F10	Rear subwoofer amplifier
F11	Driver memory seat module
F12	–
F13	–
F14	Right rear seat
F15	Left front amplifier
F16	Right front seat
F17	Rear heated seat
F18	Battery/Regulated voltage control
F19	Door mirror switch
F20	–
F21	Vehicle integration control module
F22	–
F23	Rear closure
F24	–

Fuse	Usage
F25	Left motorized safety belt pretensioner
F26	Rear defogger
F27	Right front amplifier
F28	Amplifier
F29	Sunroof
F30	Body control module 2
F31	Body control module 6
F32	Exterior rearview mirror
F33	Right window
F34	Power trunk module
F35	On-board charging module
F36	Alarm siren module
F37	DC AC inverter
F38	Rear blower
F39	Fuel pump power
F40	–

Fuse	Usage
F41	Rear seat power outlet
F42	Left rear memory seat
F43	–
F44	Rear closure
F45	Auxiliary audio/ Video/Radio
F46	External object calculating/Side blind zone alert/ Radar short range sensor
F47	–
F48	Right front seat
F49	Memory bolster module
F50	Body control module 1
F51	Transmission control module
F52	Parking assist

Fuse	Usage
F53	Heated, cooled or ventilated seats (if equipped)
F54	Rain sensor/Power sounder/Intrusion/ Universal remote system
F55	Front memory seat module
F56	Evaporative emissions leak check module
F57	Voltage current temperature module
F58	–
F59	Engine control module power
F60	Right motorized safety belt pretensioner
F61	Parking lamps
F62	–
F63	–

Fuse	Usage
F64	Engine control module/Ignition
F65	Rear glass sunshade
F66	Rear vision camera/ Interior rearview mirror
F67	DC DC converter/ Air quality sensor
F68	Damping control module
F69	–
F70	–
F71	–
F72	–
F73	–
F74	–
F75	–

Fuse	Usage

Relays	Usage
R1	Rear seat power outlet relay
R2	Fuel pump relay
R3	Run/Crank relay

Wheels and Tires

Tires

Every new GM vehicle has high-quality tires made by a leading tire manufacturer. See the warranty manual for information regarding the tire warranty and where to get service. For additional information refer to the tire manufacturer.

⚠ Warning

- Poorly maintained and improperly used tires are dangerous.
- Overloading the tires can cause overheating as a result of too much flexing. There could be a blowout and a serious crash. See *Vehicle Load Limits* ⇨ *198*.

(Continued)

Warning (Continued)

- Underinflated tires pose the same danger as overloaded tires. The resulting crash could cause serious injury. Check all tires frequently to maintain the recommended pressure. Tire pressure should be checked when the tires are cold.
- Overinflated tires are more likely to be cut, punctured, or broken by a sudden impact — such as when hitting a pothole. Keep tires at the recommended pressure.
- Worn or old tires can cause a crash. If the tread is badly worn, replace them.

(Continued)

Warning (Continued)

- Replace any tires that have been damaged by impacts with potholes, curbs, etc.
- Improperly repaired tires can cause a crash. Only the dealer or an authorized tire service center should repair, replace, dismount, and mount the tires.
- Do not spin the tires in excess of 56 km/h (35 mph) on slippery surfaces such as snow, mud, ice, etc. Excessive spinning may cause the tires to explode.

See *Tire Pressure for High-Speed Operation* ⇨ *308* for inflation pressure adjustment for high-speed driving.

All-Season Tires

This vehicle may come with all-season tires. These tires are designed to provide good overall performance on most road surfaces and weather conditions. Original equipment tires designed to GM's specific tire performance criteria have a TPC specification code molded onto the sidewall. Original equipment all-season tires can be identified by the last two characters of this TPC code, which will be “MS.”

Consider installing winter tires on the vehicle if frequent driving on snow or ice-covered roads is expected. All-season tires provide adequate performance for most winter driving conditions, but they may not offer the same level of traction or performance as winter tires on snow or ice-covered roads. See *Winter Tires* ⇨ *300*.

Winter Tires

This vehicle was not originally equipped with winter tires. Winter tires are designed for increased traction on snow and ice-covered roads. Consider installing winter tires on the vehicle if frequent driving on ice or snow covered roads is expected. See your dealer for details regarding winter tire availability and proper tire selection. Also, see *Buying New Tires* ⇨ *315*.

With winter tires, there may be decreased dry road traction, increased road noise, and shorter tread life. After changing to winter tires, be alert for changes in vehicle handling and braking.

If using winter tires:

- Use tires of the same brand and tread type on all four wheel positions.
- Use only radial ply tires of the same size, load range, and speed rating as the original equipment tires.

Winter tires with the same speed rating as the original equipment tires may not be available for H, V, W, Y, and ZR speed rated tires. If winter tires with a lower speed rating are chosen, never exceed the tire's maximum speed capability.

Low-Profile Tires

If the vehicle has 245/45R19, 245/40R20, or 245/40ZR20XL (99Y) size tires, they are classified as low-profile tires.

Caution

Low-profile tires are more susceptible to damage from road hazards or curb impact than standard profile tires. Tire and/or wheel assembly damage can occur when coming into contact with road hazards like potholes, or sharp edged objects, or when sliding into a curb. The warranty does not cover this type of damage. Keep tires set to the correct inflation pressure and when possible, avoid contact with curbs, potholes, and other road hazards.

Summer Tires

This vehicle may come with high performance summer tires. These tires have a special tread and compound that are optimized for maximum dry and wet road performance. This special tread and compound will have decreased performance in cold climates, and on ice and snow. It is recommended that winter tires be installed on the vehicle if frequent driving at temperatures below approximately 5 °C (40 °F) or on ice or snow covered roads is expected. See *Winter Tires* ⇨ *300*.

Caution

High performance summer tires have rubber compounds that lose flexibility and may develop surface cracks in the tread area at temperatures below −7 °C (20 °F). Always store high performance summer tires indoors and at temperatures above −7 °C (20 °F) when not in

(Continued)

Caution (Continued)

use. If the tires have been subjected to −7 °C (20 °F) or less, let them warm up in a heated space to at least 5 °C (40 °F) for 24 hours or more before being installed or driving a vehicle on which they are installed. Do not apply heat or blow heated air directly on the tires. Always inspect tires before use. See *Tire Inspection* ⇨ *312*.

Tire Sidewall Labeling

Useful information about a tire is molded into its sidewall. The examples show a typical passenger vehicle tire and a compact spare tire sidewall.

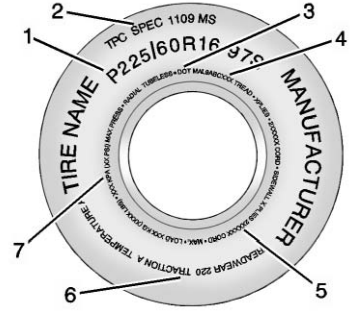

Passenger (P-Metric) Tire Example

(1) Tire Size : The tire size is a combination of letters and numbers used to define a particular tire's width, height, aspect ratio, construction type, and service description. See the “Tire Size” illustration later in this section.

(2) TPC Spec (Tire Performance Criteria Specification) : Original equipment tires designed to GM's specific tire performance criteria have a TPC specification code molded onto the sidewall.

GM's TPC specifications meet or exceed all federal safety guidelines.

(3) DOT (Department of Transportation) : The Department of Transportation (DOT) code indicates that the tire is in compliance with the U.S. Department of Transportation Motor Vehicle Safety Standards.

DOT Tire Date of Manufacture : The last four digits of the TIN indicate the tire manufactured date. The first two digits represent the week (01–52) and the last two digits, the year. For example, the third week of the year 2010 would have a four-digit DOT date of 0310.

(4) Tire Identification Number (TIN) : The letters and numbers following the DOT (Department of Transportation) code are the Tire Identification Number (TIN). The TIN shows the manufacturer and plant code, tire size, and date the tire was manufactured. The TIN is molded onto both sides of the tire, although only one side may have the date of manufacture.

(5) Tire Ply Material : The type of cord and number of plies in the sidewall and under the tread.

(6) Uniform Tire Quality Grading (UTQG) : Tire manufacturers are required to grade tires based on three performance factors: treadwear, traction, and temperature resistance. For more information see *Uniform Tire Quality Grading* ⇨ *316*.

(7) Maximum Cold Inflation Load Limit : Maximum load that can be carried and the maximum pressure needed to support that load.

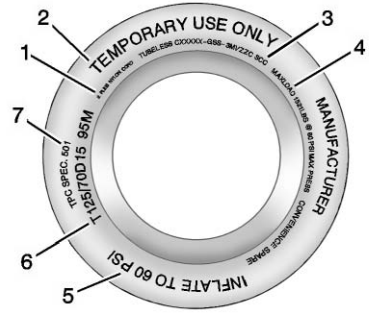

Compact Spare Tire Example

(1) Tire Ply Material : The type of cord and number of plies in the sidewall and under the tread.

(2) Temporary Use Only : The compact spare tire or temporary use tire should not be driven at speeds over 80 km/h (50 mph). The compact spare tire is for emergency use when a regular road tire has lost air and gone flat. If the vehicle has a compact spare tire, see *Compact Spare Tire* ⇨ *326* and *If a Tire Goes Flat* ⇨ *320*.

(3) Tire Identification Number (TIN) : The letters and numbers following the DOT (Department of Transportation) code are the Tire Identification Number (TIN). The TIN shows the manufacturer and plant code, tire size, and date the tire was manufactured. The TIN is molded onto both sides of the tire, although only one side may have the date of manufacture.

(4) Maximum Cold Inflation Load Limit : Maximum load that can be carried and the maximum pressure needed to support that load.

(5) Tire Inflation : The temporary use tire or compact spare tire should be inflated to 420 kPa (60 psi). For more information on tire pressure and inflation see *Tire Pressure* ⇨ *306*.

(6) Tire Size : A combination of letters and numbers define a tire's width, height, aspect ratio, construction type, and service description. The letter T as the first character in the tire size means the tire is for temporary use only.

(7) TPC Spec (Tire Performance Criteria Specification) : Original equipment tires designed to GM's specific tire performance criteria have a TPC specification code molded onto the sidewall. GM's TPC specifications meet or exceed all federal safety guidelines.

Tire Designations

Tire Size

The following is an example of a typical passenger vehicle tire size.

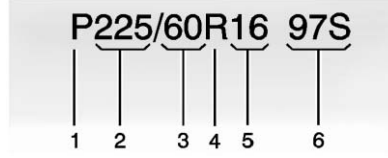

(1) Passenger (P-Metric) Tire : The United States version of a metric tire sizing system. The letter P as the first character in the tire size means a passenger vehicle tire engineered to standards set by the U.S. Tire and Rim Association.

(2) Tire Width : The three-digit number indicates the tire section width in millimeters from sidewall to sidewall.

(3) Aspect Ratio : A two-digit number that indicates the tire height-to-width measurements. For example, if the tire size aspect ratio is 60, as shown in item 3 of the illustration, it would mean that the tire's sidewall is 60 percent as high as it is wide.

(4) Construction Code : A letter code is used to indicate the type of ply construction in the tire. The letter R means radial ply construction; the letter D means diagonal or bias ply construction; and the letter B means belted-bias ply construction.

(5) Rim Diameter : Diameter of the wheel in inches.

(6) Service Description : These characters represent the load index and speed rating of the tire. The load index represents the load carrying capacity a tire is certified to carry. The speed rating is the maximum speed a tire is certified to carry a load.

Tire Terminology and Definitions

Air Pressure : The amount of air inside the tire pressing outward on each square inch of the tire. Air pressure is expressed in kPa (kilopascal) or psi (pounds per square inch).

Accessory Weight : The combined weight of optional accessories. Some examples of optional accessories are automatic transmission, power windows, power seats, and air conditioning.

Aspect Ratio : The relationship of a tire's height to its width.

Belt : A rubber coated layer of cords between the plies and the tread. Cords may be made from steel or other reinforcing materials.

Bead : The tire bead contains steel wires wrapped by steel cords that hold the tire onto the rim.

Bias Ply Tire : A pneumatic tire in which the plies are laid at alternate angles less than 90 degrees to the centerline of the tread.

Cold Tire Pressure : The amount of air pressure in a tire, measured in kPa (kilopascal) or psi (pounds per square inch) before a tire has built up heat from driving. See *Tire Pressure* ⇨ *306*.

Curb Weight : The weight of a motor vehicle with standard and optional equipment including the maximum capacity of fuel, oil, and coolant, but without passengers and cargo.

DOT Markings : A code molded into the sidewall of a tire signifying that the tire is in compliance with the U.S. Department of Transportation (DOT) Motor Vehicle Safety Standards. The DOT code includes the Tire Identification Number (TIN), an alphanumeric designator which can also identify the tire manufacturer, production plant, brand, and date of production.

GVWR : Gross Vehicle Weight Rating. See *Vehicle Load Limits* ⇨ *198*.

GAWR FRT : Gross Axle Weight Rating for the front axle. See *Vehicle Load Limits* ⇨ *198*.

GAWR RR : Gross Axle Weight Rating for the rear axle. See *Vehicle Load Limits* ⇨ *198*.

Intended Outboard Sidewall : The side of an asymmetrical tire that must always face outward when mounted on a vehicle.

Kilopascal (kPa) : The metric unit for air pressure.

Light Truck (LT-Metric) Tire : A tire used on light duty trucks and some multipurpose passenger vehicles.

Load Index : An assigned number ranging from 1 to 279 that corresponds to the load carrying capacity of a tire.

Maximum Inflation Pressure : The maximum air pressure to which a cold tire can be inflated. The maximum air pressure is molded onto the sidewall.

Maximum Load Rating : The load rating for a tire at the maximum permissible inflation pressure for that tire.

Maximum Loaded Vehicle Weight : The sum of curb weight, accessory weight, vehicle capacity weight, and production options weight.

Normal Occupant Weight : The number of occupants a vehicle is designed to seat multiplied by 68 kg (150 lb). See *Vehicle Load Limits* ⇨ *198*.

Occupant Distribution : Designated seating positions.

Outward Facing Sidewall : The side of an asymmetrical tire that has a particular side that faces outward when mounted on a vehicle. The side of the tire that contains a whitewall, bears white lettering, or bears manufacturer, brand, and/or model name molding that is higher or deeper than the same moldings on the other sidewall of the tire.

Passenger (P-Metric) Tire : A tire used on passenger cars and some light duty trucks and multipurpose vehicles.

Recommended Inflation Pressure : Vehicle manufacturer's recommended tire inflation pressure as shown on the tire placard. See *Tire Pressure* ⇨ *306* and *Vehicle Load Limits* ⇨ *198*.

Radial Ply Tire : A pneumatic tire in which the ply cords that extend to the beads are laid at 90 degrees to the centerline of the tread.

Rim : A metal support for a tire and upon which the tire beads are seated.

Sidewall : The portion of a tire between the tread and the bead.

Speed Rating : An alphanumeric code assigned to a tire indicating the maximum speed at which a tire can operate.

Traction : The friction between the tire and the road surface. The amount of grip provided.

Tread : The portion of a tire that comes into contact with the road.

Treadwear Indicators : Narrow bands, sometimes called wear bars, that show across the tread of a tire when only 1.6 mm (1/16 in) of tread remains. See *When It Is Time for New Tires* ⇨ *314*.

UTQGS (Uniform Tire Quality Grading Standards) : A tire information system that provides consumers with ratings for a tire's traction, temperature, and treadwear. Ratings are determined by tire manufacturers using government testing procedures. The ratings are molded into the sidewall of the tire. See *Uniform Tire Quality Grading* ⇨ *316*.

Vehicle Capacity Weight : The number of designated seating positions multiplied by 68 kg (150 lb) plus the rated cargo load. See *Vehicle Load Limits* ⇨ *198*.

Vehicle Maximum Load on the Tire : Load on an individual tire due to curb weight, accessory weight, occupant weight, and cargo weight.

Vehicle Placard : A label permanently attached to a vehicle showing the vehicle capacity weight and the original equipment tire size and recommended inflation pressure. See “Tire and Loading Information Label” under *Vehicle Load Limits* ⇨ *198*.

Tire Pressure

Tires need the correct amount of air pressure to operate effectively.

Caution

Neither tire underinflation nor overinflation is good. Underinflated tires, or tires that do not have enough air, can result in:

- Tire overloading and overheating which could lead to a blowout.
- Premature or irregular wear.
- Poor handling.
- Reduced fuel economy.

Overinflated tires, or tires that have too much air, can result in:

- Unusual wear.

(Continued)

Caution (Continued)

- Poor handling.
- Rough ride.
- Needless damage from road hazards.

The Tire and Loading Information label on the vehicle indicates the original equipment tires and the correct cold tire inflation pressures. The recommended pressure is the minimum air pressure needed to support the vehicle's maximum load carrying capacity. See *Vehicle Load Limits* ⇨ *198*.

How the vehicle is loaded affects vehicle handling and ride comfort. Never load the vehicle with more weight than it was designed to carry.

When to Check

Check the tires once a month or more. Do not forget the compact spare, if the vehicle has one. The cold compact spare tire pressure should be at 420 kPa (60 psi). See *Compact Spare Tire* ⇨ *326*.

How to Check

Use a good quality pocket-type gauge to check tire pressure. Proper tire inflation cannot be determined by looking at the tire. Check the tire inflation pressure when the tires are cold, meaning the vehicle has not been driven for at least three hours or no more than 1.6 km (1 mi).

Remove the valve cap from the tire valve stem. Press the tire gauge firmly onto the valve to get a pressure measurement. If the cold tire inflation pressure matches the recommended pressure on the Tire and Loading Information label, no further adjustment is necessary. If the inflation pressure is low, add air until the recommended pressure is reached. If the inflation pressure is high, press on the metal stem in the center of the tire valve to release air.

Recheck the tire pressure with the tire gauge.

Put the valve caps back on the valve stems to keep out dirt and moisture and prevent leaks. Use only valve caps designed for the vehicle by GM. TPMS sensors could be damaged and would not be covered by the vehicle warranty.

Tire Pressure for High-Speed Operation

⚠ Warning

Driving at high speeds, 160 km/h (100 mph) or higher, puts additional strain on tires. Sustained high-speed driving causes excessive heat buildup and can cause sudden tire failure. This could cause a crash, and you or others could be killed. Some high-speed rated tires require inflation pressure adjustment for high-speed operation. When speed limits and road conditions allow the vehicle to be driven at high speeds, make sure the tires are rated for high-speed operation, are in excellent condition, and are set to the correct cold tire inflation pressure for the vehicle load.

Vehicles with 235/50R18 97V or 245/45R19 98V size tires require inflation pressure adjustment when driving the vehicle at speeds of 160 km/h (100 mph) or higher. Set the cold inflation pressure for all four tires to 270 kPa (39 psi).

Vehicles with 245/40R20 95W size tires require inflation pressure adjustment when driving the vehicle at speeds of 160 km/h (100 mph) or higher. Set the cold inflation pressure to 290 kPa (42 psi).

Vehicles with 245/40ZR20XL (99Y) size tires require inflation pressure adjustment when driving the vehicle at speeds of 160 km/h (100 mph) or higher. Set the cold inflation pressure for the front tires to 240 kPa (35 psi) and the rear tires to 260 kPa (38 psi).

Return the tires to the recommended cold tire inflation pressure when high-speed driving has ended. See *Vehicle Load Limits* ⇨ *198* and *Tire Pressure* ⇨ *306*.

Tire Pressure Monitor System

The Tire Pressure Monitor System (TPMS) uses radio and sensor technology to check tire pressure levels. The TPMS sensors monitor the air pressure in your tires and transmit tire pressure readings to a receiver located in the vehicle.

Each tire, including the spare (if provided), should be checked monthly when cold and inflated to the inflation pressure recommended by the vehicle manufacturer on the vehicle placard or tire inflation pressure label. (If your vehicle has tires of a different size than the size indicated on the vehicle placard or tire inflation pressure label, you should determine the proper tire inflation pressure for those tires.)

As an added safety feature, your vehicle has been equipped with a tire pressure monitoring system (TPMS) that illuminates a low tire pressure telltale when one or more of your tires is significantly under-inflated.

Accordingly, when the low tire pressure telltale illuminates, you should stop and check your tires as soon as possible, and inflate them to the proper pressure. Driving on a significantly under-inflated tire causes the tire to overheat and can lead to tire failure. Under-inflation also reduces fuel efficiency and tire tread life, and may affect the vehicle's handling and stopping ability.

Please note that the TPMS is not a substitute for proper tire maintenance, and it is the driver's responsibility to maintain correct tire pressure, even if under-inflation has not reached the level to trigger illumination of the TPMS low tire pressure telltale.

Your vehicle has also been equipped with a TPMS malfunction indicator to indicate when the system is not operating properly. The TPMS malfunction indicator is combined with the low tire pressure telltale. When the system detects a malfunction, the telltale will flash for approximately one minute and then remain continuously illuminated. This sequence will continue upon subsequent vehicle start-ups as long as the malfunction exists.

When the malfunction indicator is illuminated, the system may not be able to detect or signal low tire pressure as intended. TPMS malfunctions may occur for a variety of reasons, including the installation of replacement or alternate tires or wheels on the vehicle that prevent the TPMS from functioning properly. Always check the TPMS malfunction telltale after replacing one or more tires or wheels on your vehicle to ensure that the replacement or alternate tires and wheels allow the TPMS to continue to function properly.

See *Tire Pressure Monitor Operation* ⇨ *309*.

See *Radio Frequency Statement* ⇨ *371*.

Tire Pressure Monitor Operation

This vehicle may have a Tire Pressure Monitor System (TPMS). The TPMS is designed to warn the driver when a low tire pressure condition exists. TPMS sensors are mounted onto each tire and wheel assembly, excluding the spare tire and wheel assembly. The TPMS sensors monitor the air pressure in the tires and transmits the tire pressure readings to a receiver located in the vehicle.

When a low tire pressure condition is detected, the TPMS illuminates the low tire pressure warning light on the instrument cluster. If the warning light comes on, stop as soon as possible and inflate the tires to the recommended pressure

shown on the Tire and Loading Information label. See *Vehicle Load Limits* ⇨ *198*.

A message to check the pressure in a specific tire displays in the Driver Information Center (DIC). The low tire pressure warning light and the DIC warning message come on at each ignition cycle until the tires are inflated to the correct inflation pressure. Using the DIC, tire pressure levels can be viewed. For additional information and details about the DIC operation and displays see *Driver Information Center (DIC)* ⇨ *140*.

The low tire pressure warning light may come on in cool weather when the vehicle is first started, and then turn off as the vehicle is driven. This could be an early indicator that the air pressure is getting low and needs to be inflated to the proper pressure.

A Tire and Loading Information label, attached to your vehicle, shows the size of the original equipment tires and the correct inflation pressure for the tires when they are cold. See *Vehicle Load Limits* ⇨ *198* for an example of the Tire and Loading Information label and its location. Also see *Tire Pressure* ⇨ *306*.

The TPMS can warn about a low tire pressure condition but it does not replace normal tire maintenance. See *Tire Inspection* ⇨ *312*, *Tire Rotation* ⇨ *313*, and *Tires* ⇨ *299*.

Caution

Tire sealant materials are not all the same. A non-approved tire sealant could damage the TPMS sensors. TPMS sensor damage caused by using an incorrect tire sealant is not covered by the vehicle warranty. Always use only the GM approved tire sealant available through your dealer or included in the vehicle.

TPMS Malfunction Light and Message

The TPMS will not function properly if one or more of the TPMS sensors are missing or inoperable. When the system detects a malfunction, the low tire warning light flashes for about one minute and then stays on for the remainder of the ignition cycle. A DIC warning message also displays. The malfunction light and DIC warning message come on at each ignition cycle until the problem is corrected. Some of the conditions that can cause these to come on are:

- One of the road tires has been replaced with the spare tire. The spare tire does not have a TPMS sensor. The malfunction light and DIC message should go off after the road tire is replaced and the sensor matching process is performed successfully. See “TPMS Sensor Matching Process” later in this section.

- The TPMS sensor matching process was not done or not completed successfully after rotating the tires. The malfunction light and the DIC message should go off after successfully completing the sensor matching process. See "TPMS Sensor Matching Process" later in this section.
- One or more TPMS sensors are missing or damaged. The malfunction light and the DIC message should go off when the TPMS sensors are installed and the sensor matching process is performed successfully. See your dealer for service.
- Replacement tires or wheels do not match the original equipment tires or wheels. Tires and wheels other than those recommended could prevent the TPMS from functioning properly. See *Buying New Tires* ⇨ *315*.
- Operating electronic devices or being near facilities using radio wave frequencies similar to the TPMS could cause the TPMS sensors to malfunction.

If the TPMS is not functioning properly, it cannot detect or signal a low tire condition. See your dealer for service if the TPMS malfunction light and DIC message come on and stay on.

TPMS Sensor Matching Process

Each TPMS sensor has a unique identification code. The identification code needs to be matched to a new tire/wheel position after rotating the vehicle's tires or replacing one or more of the TPMS sensors. The TPMS sensor matching process should also be performed after replacing a spare tire with a road tire containing the TPMS sensor. The malfunction light and the DIC message should go off at the next ignition cycle. The sensors are matched to the tire/wheel positions, using a TPMS relearn tool, in the following order: driver side front tire, passenger side front tire, passenger side rear tire, and driver side rear tire. See your dealer for service or to purchase a relearn tool. A TPMS relearn tool can also be purchased. See Tire Pressure Monitor Sensor Activation Tool at www.gmtoolsandequipment.com or call 1-800-GM TOOLS (1-800-468-6657).

There are two minutes to match the first tire/wheel position, and five minutes overall to match all four tire/wheel positions. If it takes longer, the matching process stops and must be restarted.

The TPMS sensor matching process is:

1. Set the parking brake.
2. Place the vehicle power mode in ON/RUN/START. See *Ignition Positions* ⇨ *202*.
3. Make sure the Tire Pressure info display option is turned on. The info displays on the DIC can be turned on and off

through the Settings menu. See *Driver Information Center (DIC)* ⇨ *140*.

4. Use the five-way DIC control on the right side of the steering wheel to scroll to the Tire Pressure screen under the DIC info page. See *Driver Information Center (DIC)* ⇨ *140*.
5. Press and hold SEL in the center of the five-way DIC control.

   The horn sounds twice to signal the receiver is in relearn mode and the TIRE LEARNING ACTIVE message displays on the DIC screen.
6. Start with the driver side front tire.
7. Place the relearn tool against the tire sidewall, near the valve stem. Then press the button to activate the TPMS sensor. A horn chirp confirms that the sensor identification code has been matched to this tire and wheel position.
8. Proceed to the passenger side front tire, and repeat the procedure in Step 7.
9. Proceed to the passenger side rear tire, and repeat the procedure in Step 7.
10. Proceed to the driver side rear tire, and repeat the procedure in Step 7. The horn sounds two times to indicate the sensor identification code has been matched to the driver side rear tire, and the TPMS sensor matching process is no longer active. The TIRE LEARNING ACTIVE message on the DIC display screen goes off.
11. Press ENGINE START/STOP to turn the ignition off.
12. Set all four tires to the recommended air pressure level as indicated on the Tire and Loading Information label.

Tire Inspection

We recommend that the tires, including the spare tire, if the vehicle has one, be inspected for signs of wear or damage at least once a month.

Replace the tire if:

- The indicators at three or more places around the tire can be seen.
- There is cord or fabric showing through the tire's rubber.
- The tread or sidewall is cracked, cut, or snagged deep enough to show cord or fabric.
- The tire has a bump, bulge, or split.
- The tire has a puncture, cut, or other damage that cannot be repaired well because of the size or location of the damage.

Tire Rotation

Tires should be rotated every 12 000 km/7,500 mi. See *Maintenance Schedule* ⇨ *344*.

Tires are rotated to achieve a uniform wear for all tires. The first rotation is the most important.

Anytime unusual wear is noticed, rotate the tires as soon as possible, check for proper tire inflation pressure, and check for damaged tires or wheels. If the unusual wear continues after the rotation, check the wheel alignment. See *When It Is Time for New Tires* ⇨ *314* and *Wheel Replacement* ⇨ *318*.

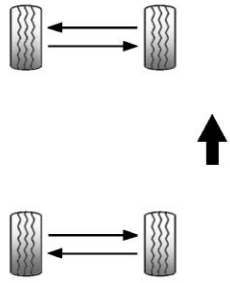

Use this rotation pattern if the vehicle has different size tires on the front and rear.

Different tire sizes should not be rotated front to rear.

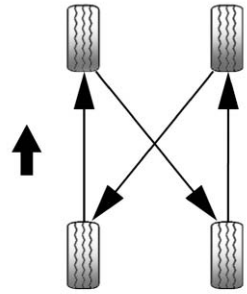

Use this rotation pattern when rotating tires of the same size installed on all four wheel positions.

If the vehicle has a compact spare tire, do not include it in the tire rotation.

Adjust the front and rear tires to the recommended inflation pressure on the Tire and Loading Information label after the tires have been rotated. See *Tire Pressure* ⇨ *306* and *Vehicle Load Limits* ⇨ *198*.

Reset the Tire Pressure Monitor System. See *Tire Pressure Monitor Operation* ⇨ *309*.

Check that all wheel nuts are properly tightened. See “Wheel Nut Torque” under *Capacities and Specifications* ⇨ *358*.

⚠ Warning

Rust or dirt on a wheel, or on the parts to which it is fastened, can make wheel nuts become loose after time. The wheel could come off and cause an accident. When changing a wheel, remove any rust or dirt from places where the wheel attaches to the vehicle. In an emergency, a cloth or a paper towel can be used; however, use a scraper or wire brush later to remove all rust or dirt.

Lightly coat the center of the wheel hub with wheel bearing grease after a wheel change or tire rotation to prevent corrosion or rust build-up. Do not get grease on the flat wheel mounting surface or on the wheel nuts or bolts.

When It Is Time for New Tires

Factors such as maintenance, temperatures, driving speeds, vehicle loading, and road conditions affect the wear rate of the tires.

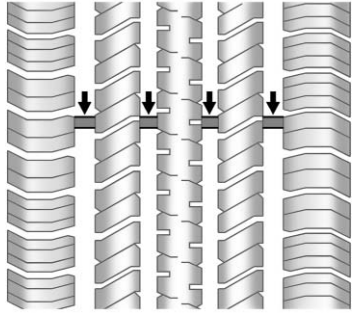

Treadwear indicators are one way to tell when it is time for new tires. Treadwear indicators appear when the tires have only 1.6 mm (1/16 in) or less of tread remaining. See *Tire Inspection* ⇨ *312* and *Tire Rotation* ⇨ *313*.

The rubber in tires ages over time. This also applies to the spare tire, if the vehicle has one, even if it is never used. Multiple factors including temperatures, loading conditions, and inflation pressure maintenance affect how fast aging takes place. GM recommends that tires, including the spare if equipped, be replaced after six years, regardless of tread wear. The tire manufacture date is the last four digits of the DOT Tire Identification Number (TIN) which is molded into one side of the tire sidewall. The first two digits represent the week (01–52) and the last two digits, the year. For example, the third week of the year 2010 would have a four-digit DOT date of 0310.

Vehicle Storage

Tires age when stored normally mounted on a parked vehicle. Park a vehicle that will be stored for at least a month in a cool, dry, clean area away from direct sunlight to

slow aging. This area should be free of grease, gasoline, or other substances that can deteriorate rubber.

Parking for an extended period can cause flat spots on the tires that may result in vibrations while driving. When storing a vehicle for at least a month, remove the tires or raise the vehicle to reduce the weight from the tires.

Buying New Tires

GM has developed and matched specific tires for the vehicle. The original equipment tires installed were designed to meet General Motors Tire Performance Criteria Specification (TPC Spec) system rating. When replacement tires are needed, GM strongly recommends buying tires with the same TPC Spec rating.

GM's exclusive TPC Spec system considers over a dozen critical specifications that impact the overall performance of the vehicle, including brake system performance, ride and handling, traction control, and tire pressure monitoring performance. GM's TPC Spec number is molded onto the tire's sidewall near the tire size. If the tires have an all-season tread design, the TPC Spec number will be followed by MS for mud and snow. See *Tire Sidewall Labeling* ⇨ *301*, for additional information.

GM recommends replacing worn tires in complete sets of four. Uniform tread depth on all tires will help to maintain the performance of the vehicle. Braking and handling performance may be adversely affected if all the tires are not replaced at the same time. If proper rotation and maintenance have been done, all four tires should wear out at about the same time. See *Tire Rotation* ⇨ *313* for information on proper tire rotation. However, if it is necessary to replace only one axle set of worn tires, place the new tires on the rear axle.

Winter tires with the same speed rating as the original equipment tires may not be available for H, V, W, and ZR speed rated tires. Never exceed the winter tire's maximum speed capability when using winter tires with a lower speed rating.

⚠ Warning

Tires could explode during improper service. Attempting to mount or dismount a tire could cause injury or death. Only your dealer or authorized tire service center should mount or dismount the tires.

⚠ Warning

Mixing tires of different sizes (other than those originally installed on the vehicle), brands, or types may cause loss of control of the vehicle, resulting in a crash or other vehicle damage. Use the correct size, brand, and type of tire on all four wheels.

⚠ Warning

Using bias-ply tires on the vehicle may cause the wheel rim flanges to develop cracks after many miles of driving. A tire and/or wheel could fail suddenly and cause a crash. Use only radial-ply tires with the wheels on the vehicle.

If the vehicle tires must be replaced with a tire that does not have a TPC Spec number, make sure they are the same size, load range, speed rating, and construction (radial) as the original tires.

Vehicles that have a tire pressure monitoring system could give an inaccurate low-pressure warning if non-TPC Spec rated tires are installed. See *Tire Pressure Monitor Operation* ⇨ *309*.

The Tire and Loading Information label indicates the original equipment tires on the vehicle. See *Vehicle Load Limits* ⇨ *198*.

Different Size Tires and Wheels

If wheels or tires are installed that are a different size than the original equipment wheels and tires, vehicle performance, including its braking, ride and handling characteristics, stability, and resistance to rollover may be affected. If the vehicle has electronic systems such as antilock brakes, rollover airbags, roll bars, traction control, electronic stability control, or All-Wheel Drive, the performance of these systems can also be affected.

⚠ Warning

If different sized wheels are used, there may not be an acceptable level of performance and safety if tires not recommended for those wheels are selected. This increases the chance of a crash and serious injury. Only use GM specific wheel and tire systems developed for the vehicle, and have them properly installed by a GM certified technician.

See *Buying New Tires* ⇨ *315* and *Accessories and Modifications* ⇨ *262*.

Uniform Tire Quality Grading

The following information relates to the system developed by the United States National Highway

Traffic Safety Administration (NHTSA), which grades tires by treadwear, traction, and temperature performance. This applies only to vehicles sold in the United States. The grades are molded on the sidewalls of most passenger car tires. The Uniform Tire Quality Grading (UTQG) system does not apply to deep tread, winter tires, compact spare tires, tires with nominal rim diameters of 10 to 12 inches (25 to 30 cm), or to some limited-production tires.

While the tires available on General Motors passenger cars and light trucks may vary with respect to these grades, they must also conform to federal safety requirements and additional General Motors Tire Performance Criteria (TPC) standards.

Quality grades can be found where applicable on the tire sidewall between tread shoulder and maximum section width. For example:

Treadwear 200 Traction AA Temperature A

All Passenger Car Tires Must Conform to Federal Safety Requirements In Addition To These Grades.

Treadwear

The treadwear grade is a comparative rating based on the wear rate of the tire when tested under controlled conditions on a specified government test course. For example, a tire graded 150 would wear one and one-half (1½) times as well on the government course as a tire graded 100. The relative performance of tires depends upon the actual conditions of their use, however, and may depart significantly from the norm due to variations in driving habits, service practices and differences in road characteristics and climate.

Traction

The traction grades, from highest to lowest, are AA, A, B, and C. Those grades represent the tire's ability to stop on wet pavement as measured under controlled conditions on specified government test surfaces of asphalt and concrete. A tire marked C may have poor traction performance. Warning: The traction grade assigned to this tire is based on straight-ahead braking traction tests, and does not include acceleration, cornering, hydroplaning, or peak traction characteristics.

Temperature

The temperature grades are A (the highest), B, and C, representing the tire's resistance

to the generation of heat and its ability to dissipate heat when tested under controlled conditions on a specified indoor laboratory test wheel. Sustained high temperature can cause the material of the tire to degenerate and reduce tire life, and excessive temperature can lead to sudden tire failure. The grade C corresponds to a level of performance which all passenger car tires must meet under the Federal Motor Safety Standard No. 109. Grades B and A represent higher levels of performance on the laboratory test wheel than the minimum required by law. Warning: The temperature grade for this tire is established for a tire that is properly inflated and not overloaded. Excessive speed, underinflation, or excessive loading, either separately or in combination, can cause heat buildup and possible tire failure.

Wheel Alignment and Tire Balance

The tires and wheels were aligned and balanced at the factory to provide the longest tire life and best overall performance. Adjustments to wheel alignment and tire balancing are not necessary on a regular basis. Consider an alignment check if there is unusual tire wear or the vehicle is significantly pulling to one side or the other. Some slight pull to the left or right, depending on the crown of the road and/or other road surface variations such as troughs or ruts, is normal. If the vehicle is vibrating when driving on a smooth road, the tires and wheels may need to be rebalanced. See your dealer for proper diagnosis.

Wheel Replacement

Replace any wheel that is bent, cracked, or badly rusted or corroded. If wheel nuts keep coming loose, the wheel, wheel bolts, and wheel nuts should be replaced.
If the wheel leaks air, replace it.

Some aluminum wheels can be repaired. See your dealer if any of these conditions exist.

Your dealer will know the kind of wheel that is needed.

Each new wheel should have the same load-carrying capacity, diameter, width, offset, and be mounted the same way as the one it replaces.

Replace wheels, wheel bolts, wheel nuts, or Tire Pressure Monitor System (TPMS) sensors with new GM original equipment parts.

⚠ Warning

Using the wrong replacement wheels, wheel bolts, or wheel nuts can be dangerous. It could affect the braking and handling of the vehicle. Tires can lose air, and cause loss of control, causing a crash. Always use the correct wheel, wheel bolts, and wheel nuts for replacement.

Caution

The wrong wheel can also cause problems with bearing life, brake cooling, speedometer or odometer calibration, headlamp aim, bumper height, vehicle ground clearance, and tire or tire chain clearance to the body and chassis.

Used Replacement Wheels

⚠ Warning

Replacing a wheel with a used one is dangerous. How it has been used or how far it has been driven may be unknown. It could fail suddenly and cause a crash. When replacing wheels, use a new GM original equipment wheel.

Tire Chains

⚠ Warning

If the vehicle has 265/45R18 size tires on the rear axle, do not use tire chains. There is not enough clearance. Tire chains used on a vehicle without the proper amount of clearance can cause damage to the brakes, suspension, or other vehicle parts. The area damaged by the tire chains could cause loss of control and a crash. Use another type of traction device only if its manufacturer recommends it for the vehicle's tire size combination and road conditions. Follow that manufacturer's instructions. To avoid vehicle damage, drive slow and readjust or remove the traction device if it contacts the vehicle. Do not spin the wheels. If traction devices are used, install them on the rear tires.

Caution

If the vehicle is equipped with a tire size other than 265/45R18, use tire chains only where legal and only when necessary. Use low profile chains that add no more than 10 mm thickness to the tire tread and inner sidewall. Use chains that are the proper size for the tires. Install them on the tires of the rear axle. Do not use chains on the tires of the front axle. Tighten them as tightly as possible with the ends securely fastened. Drive slowly and follow the chain manufacturer's instructions. If the chains contact the vehicle, stop and retighten them. If the contact continues, slow down until it stops. Driving too fast or spinning the wheels with chains on will damage the vehicle.

If a Tire Goes Flat

It is unusual for a tire to blow out while driving, especially if the tires are maintained properly. See *Tires* ⇨ *299*. If air goes out of a tire, it is much more likely to leak out slowly. But if there ever is a blowout, here are a few tips about what to expect and what to do:

If a front tire fails, the flat tire creates a drag that pulls the vehicle toward that side. Take your foot off the accelerator pedal and grip the steering wheel firmly. Steer to maintain lane position, and then gently brake to a stop, well off the road, if possible.

A rear blowout, particularly on a curve, acts much like a skid and may require the same correction as used in a skid. Stop pressing the accelerator pedal and steer to straighten the vehicle. It may be very bumpy and noisy. Gently brake to a stop, well off the road, if possible.

⚠ Warning

Driving on a flat tire will cause permanent damage to the tire. Re-inflating a tire after it has been driven on while severely underinflated or flat may cause a blowout and a serious crash. Never attempt to re-inflate a tire that has been driven on while severely underinflated or flat. Have your dealer or an authorized tire service center repair or replace the flat tire as soon as possible.

⚠ Warning

Lifting a vehicle and getting under it to do maintenance or repairs is dangerous without the appropriate safety equipment and training. If a jack is provided with the vehicle, it is designed only for changing a flat tire. If it is used for anything else, you or others could

(Continued)

Warning (Continued)

be badly injured or killed if the vehicle slips off the jack. If a jack is provided with the vehicle, only use it for changing a flat tire.

If a tire goes flat, avoid further tire and wheel damage by driving slowly to a level place, well off the road, if possible. Turn on the hazard warning flashers. See *Hazard Warning Flashers* ⇨ *173*.

⚠ Warning

Changing a tire can be dangerous. The vehicle can slip off the jack and roll over or fall causing injury or death. Find a level place to change the tire. To help prevent the vehicle from moving:

1. Set the parking brake firmly.

(Continued)

Warning (Continued)

2. Put an automatic transmission in P (Park) or a manual transmission in 1 (First) or R (Reverse).
3. Turn off the engine and do not restart while the vehicle is raised.
4. Do not allow passengers to remain in the vehicle.
5. Place wheel blocks, if equipped, on both sides of the tire at the opposite corner of the tire being changed.

When the vehicle has a flat tire (2), use the following example as a guide to assist in the placement of the wheel blocks (1), if equipped.

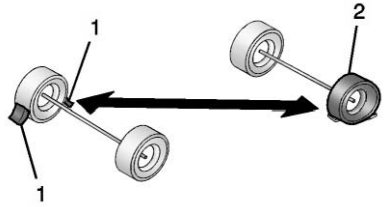

1. Wheel Block (If Equipped)
2. Flat Tire

The following information explains how to repair or change a tire.

Tire Changing

Removing the Spare Tire and Tools

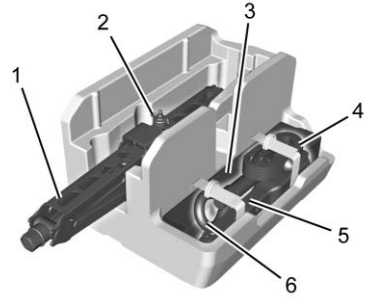

1. Jack
2. Retainer Nut
3. Tool Bag
4. Strap
5. Wrench
6. Tow Hook (If Equipped)

To access the spare tire and tools:

1. Open the trunk.
2. Lift the spare tire cover and attach the handle to the trunk edge.

3. Turn the retainer nut counterclockwise and remove the spare tire. Place the spare tire next to the tire being changed.
4. Remove the jack and tools from their container and place them near the tire being changed.

Removing the Flat Tire and Installing the Spare Tire

1. Do a safety check before proceeding. See *If a Tire Goes Flat* ⇨ *320*.
2. Turn the wheel wrench counterclockwise to loosen and remove the wheel nut caps.

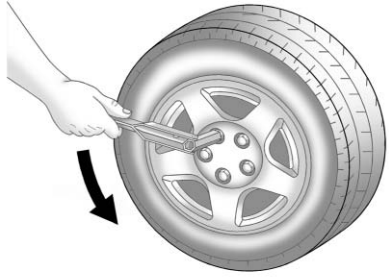

3. Turn the wheel wrench counterclockwise to loosen all the wheel nuts, but do not remove them yet.
4. Place the jack near the flat tire.
5. Put the compact spare tire near you.

⚠ Warning

Getting under a vehicle when it is lifted on a jack is dangerous. If the vehicle slips off the jack, you could be badly injured or killed. Never get under a vehicle when it is supported only by a jack.

⚠ Warning

Raising the vehicle with the jack improperly positioned can damage the vehicle and even make the vehicle fall. To help avoid personal injury and vehicle damage, be sure to fit the jack lift head into the proper location before raising the vehicle.

⚠ Warning

Lifting a vehicle and getting under it to do maintenance or repairs is dangerous without the appropriate safety equipment and training. If a jack is provided with the vehicle, it is designed only for changing a flat tire. If it is used for anything else, you or others could be badly injured or killed if the vehicle slips off the jack. If a jack is provided with the vehicle, only use it for changing a flat tire.

6. Place the hex tube end of the wrench over the hex head of the jack.
7. Place the jack under the vehicle.

Caution

Make sure that the jack lift head is in the correct position or you may damage your vehicle. The repairs would not be covered by your warranty.

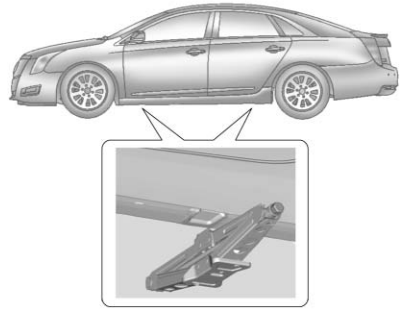

8. Position the jack lift head at the jack location nearest the flat tire within the depression of the jack pads, as shown. The jack must not be used in any other position.

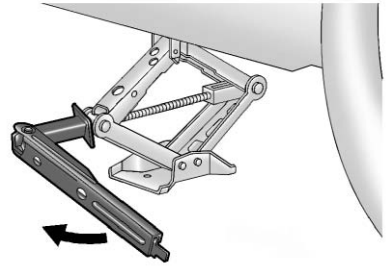

9. Raise the vehicle by turning the jack handle clockwise. Raise the vehicle far enough off the ground so there is enough room for the road tire to clear the ground.

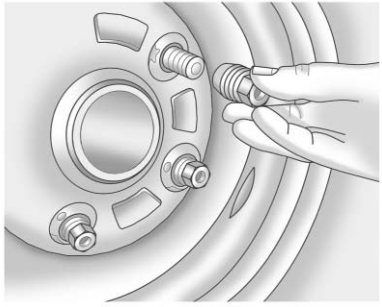

10. Remove all of the wheel nuts.
11. Remove the flat tire.

⚠ Warning

Rust or dirt on a wheel, or on the parts to which it is fastened, can make wheel nuts become loose after time. The wheel could come off and cause an accident. When changing a wheel, remove any rust or dirt from places where the wheel attaches to the vehicle. In an emergency, a cloth or a paper

(Continued)

Warning (Continued)

towel can be used; however, use a scraper or wire brush later to remove all rust or dirt.

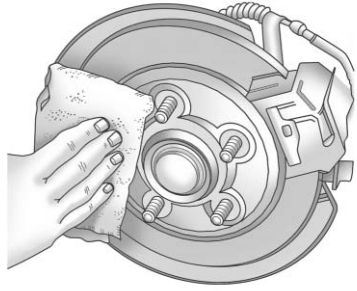

12. Remove any rust or dirt from the wheel bolts, mounting surfaces, and spare wheel.
13. Place the compact spare tire on the wheel-mounting surface.

⚠ Warning

Never use oil or grease on bolts or nuts because the nuts might come loose. The vehicle's wheel could fall off, causing a crash.

14. Reinstall the wheel nuts. Tighten each nut by hand until the wheel is held against the hub.
15. Lower the vehicle by turning the jack handle counterclockwise.

⚠ Warning

Wheel nuts that are improperly or incorrectly tightened can cause the wheels to become loose or come off. The wheel nuts should be tightened with a torque wrench to the proper torque specification after replacing. Follow the torque specification supplied by the aftermarket manufacturer when using accessory locking wheel

(Continued)

Warning (Continued)

nuts. See *Capacities and Specifications* ⇨ *358* for original equipment wheel nut torque specifications.

Caution

Improperly tightened wheel nuts can lead to brake pulsation and rotor damage. To avoid expensive brake repairs, evenly tighten the wheel nuts in the proper sequence and to the proper torque specification. See *Capacities and Specifications* ⇨ *358* for the wheel nut torque specification.

16. Tighten the wheel nuts firmly in a crisscross sequence, as shown.
17. Lower the jack all the way and remove the jack from under the vehicle.
18. Tighten the wheel nuts firmly with the wheel wrench.

Storing a Flat or Spare Tire and Tools

⚠ Warning

Storing a jack, a tire, or other equipment in the passenger compartment of the vehicle could cause injury. In a sudden stop or collision, loose equipment could strike someone. Store all these in the proper place.

To store the flat tire and tools:

1. Open the trunk.
2. Replace the jack and tools as they were, originally, stored in their container near the spare tire.
3. Replace the spare tire cover.
4. Place the tire, lying flat, in the rear storage compartment.

   If there is a loop on the end of the strap used to secure the flat tire, go to Step 5. If there is not a loop, go to Step 8.

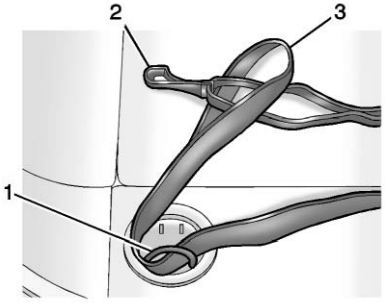

5. Route the loop end of the strap (3) through one of the cargo tie-downs (1) in the rear of the vehicle.
6. Route the hook (2) through the loop (3).
7. Pull the strap to tighten it around the cargo tie-down (1).

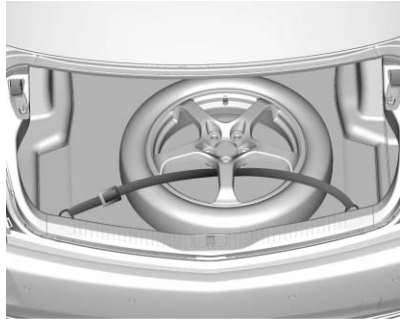

8. Route the hook end of the strap through the wheel.
9. Attach the hook to the cargo tie-down in the rear of the vehicle.
10. Tighten the strap.

The compact spare is for temporary use only. Replace the compact spare tire with a full-size tire as soon as you can.

Compact Spare Tire

⚠ Warning

Driving with more than one compact spare tire at a time could result in loss of braking and handling. This could lead to a crash and you or others could be injured. Use only one compact spare tire at a time.

If this vehicle has a compact spare tire, it was fully inflated when new; however, it can lose air over time. Check the inflation pressure regularly. It should be 420 kPa (60 psi).

Stop as soon as possible and check that the spare tire is correctly inflated after being installed on the vehicle. The compact spare tire is designed for temporary use only. The vehicle will perform differently with the spare tire installed and it is recommended that the vehicle speed be limited to 80 km/h (50 mph). To conserve the tread of the spare tire, have the standard tire

repaired or replaced as soon as convenient and return the spare tire to the storage area.

When using a compact spare tire, the AWD (if equipped), ABS, and Traction Control systems may engage until the spare tire is recognized by the vehicle, especially on slippery roads. Adjust driving to reduce possible wheel slip.

Caution

When the compact spare is installed, do not take the vehicle through an automatic car wash with guide rails. The compact spare can get caught on the rails which can damage the tire, wheel, and other parts of the vehicle.

Do not use the compact spare on other vehicles.

Do not mix the compact spare tire or wheel with other wheels or tires. They will not fit. Keep the spare tire and its wheel together.

Caution

Tire chains will not fit the compact spare. Using them can damage the vehicle and the chains. Do not use tire chains on the compact spare.

Jump Starting

Jump Starting - North America

For more information about the vehicle battery, see *Battery - North America* ⇨ *284*.

If the battery has run down, try to use another vehicle and some jumper cables to start your vehicle. Be sure to use the following steps to do it safely.

⚠ Warning

WARNING: Battery posts, terminals, and related accessories contain lead and lead compounds, chemicals known to the State of California to cause cancer and birth defects or other reproductive harm. Batteries also contain other chemicals known to the State of California to cause cancer. **WASH HANDS AFTER HANDLING.**

(Continued)

Warning (Continued)

See *California Proposition 65 Warning* ⇨ *262*.

⚠ Warning

Batteries can hurt you. They can be dangerous because:

- They contain acid that can burn you.
- They contain gas that can explode or ignite.
- They contain enough electricity to burn you.

If you do not follow these steps exactly, some or all of these things can hurt you.

Caution

Ignoring these steps could result in costly damage to the vehicle that would not be covered by the

(Continued)

Caution (Continued)

vehicle warranty. Trying to start the vehicle by pushing or pulling it will not work, and it could damage the vehicle.

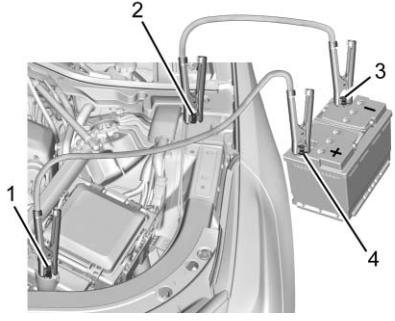

2.0L L4 Engine Shown, 3.0L V6 Engine and 3.6L V6 Engine Similar

1. Discharged Remote Battery Positive Terminal
2. Discharged Remote Battery Negative Ground Terminal
3. Good Battery Negative Terminal
4. Good Battery Positive Terminal

The jump start remote positive terminal (1) and the remote negative ground terminal (2) for the discharged battery are on the driver side of the vehicle.

The jump start negative terminal (3) and positive terminal (4) are on the battery of the vehicle providing the jump start.

The positive jump start connection for the discharged battery is under a red cover. Remove the cover to expose the terminal.

1. Check the other vehicle. It must have a 12-volt battery with a negative ground system.

Caution

If the other vehicle does not have a 12-volt system with a negative ground, both vehicles can be damaged. Only use a vehicle that has a 12-volt system with a negative ground for jump starting.

2. Position the two vehicles so that they are not touching.
3. Set the parking brake firmly and put the shift lever in P (Park). See *Shifting Into Park* ⇨ *207*.

Caution

If any accessories are left on or plugged in during the jump starting procedure, they could be damaged. The repairs would not be covered by the vehicle warranty. Whenever possible, turn off or unplug all accessories on either vehicle when jump starting.

4. Set the ignition to OFF. Turn off all lights and accessories in both vehicles, except the hazard warning flashers if needed.

⚠ Warning

An electric fan can start up even when the engine is not running and can injure you. Keep hands, clothing, and tools away from any underhood electric fan.

⚠ Warning

Using a match near a battery can cause battery gas to explode. People have been hurt doing this, and some have been blinded. Use a flashlight if you need more light.

Battery fluid contains acid that can burn you. Do not get it on you. If you accidentally get it in your eyes or on your skin, flush the place with water and get medical help immediately.

⚠ Warning

Fans or other moving engine parts can injure you badly. Keep your hands away from moving parts once the engine is running.

5. Connect one end of the red positive (+) cable to the remote positive (+) terminal on the discharged battery.
6. Connect the other end of the red positive (+) cable to the positive (+) terminal of the good battery.
7. Connect one end of the black negative (–) cable to the negative (–) terminal of the good battery.
8. Connect the other end of the black negative (–) cable to the remote negative (–) ground terminal on the driver side shock tower for the discharged battery.

9. Start the engine in the vehicle with the good battery and run the engine at idle speed for at least four minutes.
10. Try to start the vehicle that had the dead battery. If it will not start after a few tries, it probably needs service.

Caution

If the jumper cables are connected or removed in the wrong order, electrical shorting may occur and damage the vehicle. The repairs would not be covered by the vehicle warranty. Always connect and remove the jumper cables in the correct order, making sure that the cables do not touch each other or other metal.

Jumper Cable Removal

Reverse the sequence exactly when removing the jumper cables.

After starting the disabled vehicle and removing the jumper cables, allow it to idle for several minutes.

Towing the Vehicle

Caution

Incorrectly towing a disabled vehicle may cause damage. The damage would not be covered by the vehicle warranty.

Do not lash or hook to suspension components. Use the proper straps around the tires to secure the vehicle.

Have the vehicle towed on a flatbed car carrier. A wheel lift tow truck could damage the vehicle.

Consult your dealer or a professional towing service if the disabled vehicle must be towed.

Use the tow eye for towing a disabled vehicle or loading it onto a flatbed car carrier. The tow eye should not be used to recover a vehicle from an off road situation.

Caution

Improper use of the tow eye can cause vehicle damage. Use caution and low speeds to prevent damage to the vehicle.

Carefully open the cover in the fascia by using the small notch that conceals the tow eye socket.

Install the tow eye into the socket by turning it clockwise until it stops. Remove the tow eye by turning it counterclockwise. When the tow eye is removed, reinstall the cover with the notch in the original position.

Recreational Vehicle Towing

Recreational vehicle towing means towing the vehicle behind another vehicle such as a motor home. The two most common types of recreational vehicle towing are known as dinghy towing and dolly towing. Dinghy towing is towing the vehicle with all four wheels on the ground. Dolly towing is towing the vehicle with two wheels on the ground and two wheels up on a device known as a dolly.

Here are some important things to consider before recreational vehicle towing:

- What is the towing capacity of the towing vehicle? Be sure to read the tow vehicle manufacturer's recommendations.
- What is the distance that will be traveled? Some vehicles have restrictions on how far and how long they can tow.
- Is the proper towing equipment going to be used? See your dealer or trailering professional for additional advice and equipment recommendations.
- Is the vehicle ready to be towed? Just as preparing the vehicle for a long trip, make sure the vehicle is prepared to be towed.

Dinghy Towing

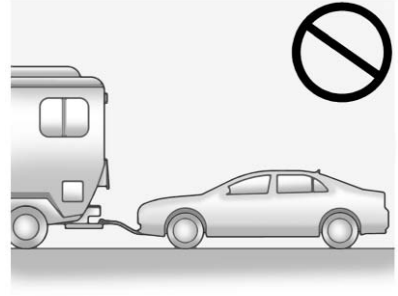

Caution

If the vehicle is towed with all four wheels on the ground, the drivetrain components could be damaged. The repairs would not be covered by the vehicle warranty. Do not tow the vehicle with all four wheels on the ground.

The vehicle was not designed to be towed with all four wheels on the ground. If the vehicle must be

towed, a dolly should be used. See the following information on dolly towing.

Caution
Use of a shield mounted in front of the vehicle grille could restrict airflow and cause damage to the transmission. The repairs would not be covered by the vehicle warranty. If using a shield, only use one that attaches to the towing vehicle.

Dolly Towing (Rear-Wheel-Drive Vehicles)

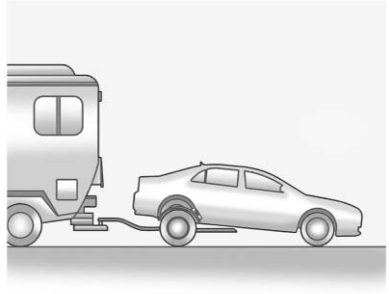

To dolly tow a rear-wheel-drive vehicle from the rear:

1. Attach the dolly to the tow vehicle following the dolly manufacturer instructions.
2. Put the rear wheels on the dolly.
3. Shift the transmission to P (Park).
4. Firmly set the parking brake.
5. Use an adequate clamping device designed for towing to ensure that the front wheels are locked into the straight-ahead position.
6. Secure the vehicle to the dolly following the manufacturer instructions.
7. Release the parking brake only after the vehicle being towed is firmly attached to the towing vehicle.
8. Turn the ignition off.

Dolly Towing (All-Wheel Drive Vehicles)

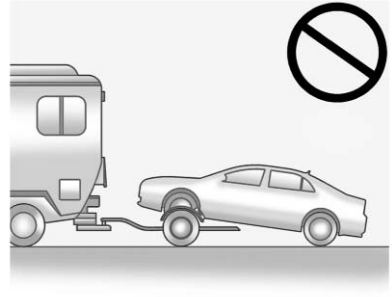

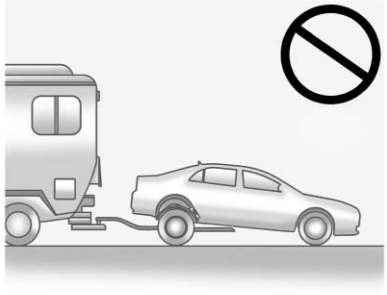

Vehicles with all-wheel drive cannot be dolly towed.

Appearance Care

Exterior Care

Locks

Locks are lubricated at the factory. Use a de-icing agent only when absolutely necessary, and have the locks greased after using. See *Recommended Fluids and Lubricants* ⇨ *353*.

Washing the Vehicle

To preserve the vehicle's finish, wash it often and out of direct sunlight.

Caution

Do not use petroleum-based, acidic, or abrasive cleaning agents as they can damage the vehicle's paint, metal, or plastic parts. If damage occurs, it would not be covered by the vehicle warranty. Approved cleaning products can be obtained from

(Continued)

Caution (Continued)

your dealer. Follow all manufacturer directions regarding correct product usage, necessary safety precautions, and appropriate disposal of any vehicle care product.

Caution

Avoid using high-pressure washes closer than 30 cm (12 in) to the surface of the vehicle. Use of power washers exceeding 8,274 kPa (1,200 psi) can result in damage or removal of paint and decals.

Caution

Do not power wash any component under the hood that has this symbol.

(Continued)

Caution (Continued)

This could cause damage that would not be covered by the vehicle warranty.

If using an automatic car wash, follow the car wash instructions. The windshield wiper and rear window wiper, if equipped, must be off. Remove any accessories that may be damaged or interfere with the car wash equipment.

Rinse the vehicle well, before washing and after, to remove all cleaning agents completely. If they are allowed to dry on the surface, they could stain.

Dry the finish with a soft, clean chamois or an all-cotton towel to avoid surface scratches and water spotting.

Finish Care

Application of aftermarket clearcoat sealant/wax materials is not recommended. If painted surfaces are damaged, see your dealer to have the damage assessed and repaired. Foreign materials such as calcium chloride and other salts, ice melting agents, road oil and tar, tree sap, bird droppings, chemicals from industrial chimneys, etc., can damage the vehicle's finish if they remain on painted surfaces. Wash the vehicle as soon as possible. If necessary, use non-abrasive cleaners that are marked safe for painted surfaces to remove foreign matter.

Occasional hand waxing or mild polishing should be done to remove residue from the paint finish. See your dealer for approved cleaning products.

Do not apply waxes or polishes to uncoated plastic, vinyl, rubber, decals, simulated wood, or flat paint as damage can occur.

Caution

Machine compounding or aggressive polishing on a basecoat/clearcoat paint finish

(Continued)

Caution (Continued)

may damage it. Use only non-abrasive waxes and polishes that are made for a basecoat/clearcoat paint finish on the vehicle.

To keep the paint finish looking new, keep the vehicle garaged or covered whenever possible.

Protecting Exterior Bright Metal Moldings

Caution

Failure to clean and protect the bright metal moldings can result in a hazy white finish or pitting. This damage would not be covered by the vehicle warranty.

The bright metal moldings on the vehicle are aluminum, chrome, or stainless steel. To prevent damage, always follow these cleaning instructions:

- Be sure the molding is cool to the touch before applying any cleaning solution.
- Use only approved cleaning solutions for aluminum, chrome, or stainless steel. Some cleaners are highly acidic or contain alkaline substances and can damage the moldings.
- Always dilute a concentrated cleaner according to the manufacturer's instructions.
- Do not use cleaners that are not intended for automotive use.
- Use a nonabrasive wax on the vehicle after washing to protect and extend the molding finish.

Cleaning Exterior Lamps/ Lenses, Emblems, Decals, and Stripes

Use only lukewarm or cold water, a soft cloth, and a car washing soap to clean exterior lamps, lenses, emblems, decals, and stripes. Follow instructions under "Washing the Vehicle" previously in this section.

Lamp covers are made of plastic, and some have a UV protective coating. Do not clean or wipe them when dry.

Do not use any of the following on lamp covers:

- Abrasive or caustic agents.
- Washer fluids and other cleaning agents in higher concentrations than suggested by the manufacturer.
- Solvents, alcohols, fuels, or other harsh cleaners.
- Ice scrapers or other hard items.
- Aftermarket appearance caps or covers while the lamps are illuminated, due to excessive heat generated.

Caution

Failure to clean lamps properly can cause damage to the lamp cover that would not be covered by the vehicle warranty.

Caution

Using wax on low gloss black finish stripes can increase the gloss level and create a non-uniform finish. Clean low gloss stripes with soap and water only.

Air Intakes

Clear debris from the air intakes between the hood and windshield when washing the vehicle.

Shutter System

The vehicle may have a shutter system designed to help increase fuel economy. Keep the shutter system clean for proper operation.

Windshield and Wiper Blades

Clean the outside of the windshield with glass cleaner.

Clean rubber blades using a lint-free cloth or paper towel soaked with windshield washer fluid or a mild detergent. Wash the windshield thoroughly when cleaning the blades. Bugs, road grime, sap, and a buildup of vehicle wash/wax treatments may cause wiper streaking.

Replace the wiper blades if they are worn or damaged. Damage can be caused by extreme dusty conditions, sand, salt, heat, sun, snow, and ice.

Weatherstrips

Apply Dielectric silicone grease on weatherstrips to make them last longer, seal better, and not stick or squeak. Lubricate weatherstrips at least once a year. Hot, dry climates may require more frequent application. Black marks from rubber material on painted surfaces can be removed by rubbing with a clean cloth. See *Recommended Fluids and Lubricants* ⇨ *353*.

Tires

Use a stiff brush with tire cleaner to clean the tires.

Caution

Using petroleum-based tire dressing products on the vehicle may damage the paint finish and/or tires. When applying a tire dressing, always wipe off any overspray from all painted surfaces on the vehicle.

Wheels and Trim — Aluminum or Chrome

Use a soft, clean cloth with mild soap and water to clean the wheels. After rinsing thoroughly with clean water, dry with a soft, clean towel. A wax may then be applied.

Caution

Chrome wheels and other chrome trim may be damaged if the vehicle is not washed after driving on roads that have been sprayed with magnesium, calcium, or sodium chloride. These chlorides are used on roads for conditions such as ice and dust. Always wash the chrome with soap and water after exposure.

Caution

To avoid surface damage, do not use strong soaps, chemicals, abrasive polishes, cleaners, brushes, or cleaners that contain acid on aluminum or chrome-plated wheels. Use only approved cleaners. Also, never drive a vehicle with aluminum or chrome-plated wheels through an automatic car wash that uses silicone carbide tire cleaning

(Continued)

Caution (Continued)

brushes. Damage could occur and the repairs would not be covered by the vehicle warranty.

Brake System

Visually inspect brake lines and hoses for proper hook-up, binding, leaks, cracks, chafing, etc. Inspect disc brake pads for wear and rotors for surface condition. Inspect brake linings/shoes for wear or cracks. Inspect all other brake parts.

Steering, Suspension, and Chassis Components

Visually inspect steering, suspension, and chassis components for damaged, loose, or missing parts or signs of wear at least once a year.

Inspect power steering for proper attachment, connections, binding, leaks, cracks, chafing, etc.

Visually check constant velocity joint boots and axle seals for leaks.

Body Component Lubrication

Lubricate all key lock cylinders, hood hinges, liftgate hinges, and the steel fuel door hinges, unless the components are plastic. Applying silicone grease on weatherstrips with a clean cloth will make them last longer, seal better, and not stick or squeak.

Underbody Maintenance

At least twice a year, spring and fall, use plain water to flush any corrosive materials from the underbody. Take care to thoroughly clean any areas where mud and other debris can collect.

Do not directly power wash the transfer case and/or front/rear axle output seals. High pressure water can overcome the seals and contaminate the fluid. Contaminated fluid will decrease the life of the transfer case and/or axles and should be replaced.

Sheet Metal Damage

If the vehicle is damaged and requires sheet metal repair or replacement, make sure the body repair shop applies anti-corrosion material to parts repaired or replaced to restore corrosion protection.

Original manufacturer replacement parts will provide the corrosion protection while maintaining the vehicle warranty.

Finish Damage

Quickly repair minor chips and scratches with touch-up materials available from your dealer to avoid corrosion. Larger areas of finish damage can be corrected in your dealer's body and paint shop.

Chemical Paint Spotting

Airborne pollutants can fall upon and attack painted vehicle surfaces causing blotchy, ring-shaped discolorations, and small, irregular dark spots etched into the paint surface. See “Finish Care” previously in this section.

Interior Care

To prevent dirt particle abrasions, regularly clean the vehicle's interior. Immediately remove any soils. Newspapers or dark garments can transfer color to the vehicle's interior.

Use a soft bristle brush to remove dust from knobs and crevices on the instrument cluster. Using a mild soap solution, immediately remove hand lotions, sunscreen, and insect repellent from all interior surfaces or permanent damage may result.

Use cleaners specifically designed for the surfaces being cleaned to prevent permanent damage. Apply all cleaners directly to the cleaning cloth. Do not spray cleaners on any switches or controls. Remove cleaners quickly.

Before using cleaners, read and follow all safety instructions on the label. While cleaning the interior, open the doors and windows to get proper ventilation.

To prevent damage, do not clean the interior using the following cleaners or techniques:

- Never use a razor or any other sharp object to remove soil from any interior surface.
- Never use a brush with stiff bristles.
- Never rub any surface aggressively or with too much pressure.
- Do not use laundry detergents or dishwashing soaps with degreasers. For liquid cleaners, use approximately 20 drops per 3.8 L (1 gal) of water.
  A concentrated soap solution will create streaks and attract dirt.
  Do not use solutions that contain strong or caustic soap.
- Do not heavily saturate the upholstery when cleaning.
- Do not use solvents or cleaners containing solvents.

Interior Glass

To clean, use a terry cloth fabric dampened with water. Wipe droplets left behind with a clean dry cloth. If necessary, use a commercial glass cleaner after cleaning with plain water.

Caution

To prevent scratching, never use abrasive cleaners on automotive glass. Abrasive cleaners or aggressive cleaning may damage the rear window defogger.

Cleaning the windshield with water during the first three to six months of ownership will reduce tendency to fog.

Speaker Covers

Vacuum around a speaker cover gently, so that the speaker will not be damaged. Clean spots with water and mild soap.

Coated Moldings

Coated moldings should be cleaned.

- When lightly soiled, wipe with a sponge or soft, lint-free cloth dampened with water.
- When heavily soiled, use warm soapy water.

Fabric/Carpet/Suede

Start by vacuuming the surface using a soft brush attachment. If a rotating vacuum brush attachment is being used, only use it on the floor carpet. Before cleaning, gently remove as much of the soil as possible:

- Gently blot liquids with a paper towel. Continue blotting until no more soil can be removed.
- For solid soils, remove as much as possible prior to vacuuming.

To clean:

1. Saturate a clean, lint-free colorfast cloth with water. Microfiber cloth is recommended to prevent lint transfer to the fabric or carpet.
2. Remove excess moisture by gently wringing until water does not drip from the cleaning cloth.
3. Start on the outside edge of the soil and gently rub toward the center. Fold the cleaning cloth to a clean area frequently to prevent forcing the soil in to the fabric.
4. Continue gently rubbing the soiled area until there is no longer any color transfer from the soil to the cleaning cloth.
5. If the soil is not completely removed, use a mild soap solution followed only by plain water.

If the soil is not completely removed, it may be necessary to use a commercial upholstery cleaner or spot lifter. Test a small hidden area for colorfastness before using a commercial upholstery cleaner or spot lifter. If ring formation occurs, clean the entire fabric or carpet.

After cleaning, use a paper towel to blot excess moisture.

Cleaning High Gloss Surfaces and Vehicle Information and Radio Displays

Use a microfiber cloth on high gloss surfaces or vehicle displays. First, use a soft bristle brush to remove dirt that can scratch the surface. Then gently clean by rubbing with a microfiber cloth. Never use window cleaners or solvents. Periodically hand wash the microfiber cloth separately, using mild soap. Do not use bleach or fabric softener. Rinse thoroughly and air dry before next use.

Caution
Do not attach a device with a suction cup to the display. This may cause damage and would not be covered by the vehicle warranty.

Instrument Panel, Leather, Vinyl, Other Plastic Surfaces, Low Gloss Paint Surfaces, and Natural Open Pore Wood Surfaces

Use a soft microfiber cloth dampened with water to remove dust and loose dirt. For a more thorough cleaning, use a soft microfiber cloth dampened with a mild soap solution.

Caution

Soaking or saturating leather, especially perforated leather, as well as other interior surfaces, may cause permanent damage. Wipe excess moisture from these surfaces after cleaning and allow them to dry naturally. Never use heat, steam, or spot removers. Do not use cleaners that contain silicone or wax-based products. Cleaners containing these solvents can permanently change

(Continued)

Caution (Continued)

the appearance and feel of leather or soft trim, and are not recommended.

Do not use cleaners that increase gloss, especially on the instrument panel. Reflected glare can decrease visibility through the windshield under certain conditions.

Caution

Use of air fresheners may cause permanent damage to plastics and painted surfaces. If an air freshener comes in contact with any plastic or painted surface in the vehicle, blot immediately and clean with a soft cloth dampened with a mild soap solution. Damage caused by air fresheners would not be covered by the vehicle warranty.

Cargo Cover and Convenience Net

Wash with warm water and mild detergent. Do not use chlorine bleach. Rinse with cold water, and then dry completely.

Care of Safety Belts

Keep belts clean and dry.

⚠ Warning

Do not bleach or dye safety belt webbing. It may severely weaken the webbing. In a crash, they might not be able to provide adequate protection. Clean and rinse safety belt webbing only with mild soap and lukewarm water. Allow the webbing to dry.

Floor Mats

⚠ Warning

If a floor mat is the wrong size or is not properly installed, it can interfere with the pedals. Interference with the pedals can cause unintended acceleration and/or increased stopping distance which can cause a crash and injury. Make sure the floor mat does not interfere with the pedals.

Use the following guidelines for proper floor mat usage.

- The original equipment floor mats were designed for your vehicle. If the floor mats need replacing, it is recommended that GM certified floor mats be purchased. Non-GM floor mats may not fit properly and may interfere with the pedals. Always check that the floor mats do not interfere with the pedals.
- Do not use a floor mat if the vehicle is not equipped with a floor mat retainer on the driver side floor.
- Use the floor mat with the correct side up. Do not turn it over.
- Do not place anything on top of the driver side floor mat.
- Use only a single floor mat on the driver side.
- Do not place one floor mat on top of another.

The driver side floor mat is held in place by two button-type retainers.

Removing and Replacing the Floor Mats

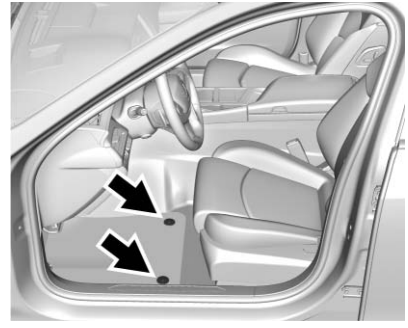

1. Pull up on the rear of the floor mat to unlock the retainers and remove.
2. Reinstall by lining up the floor mat retainer openings over the carpet retainers and snap into position.
3. Make sure the floor mat is properly secured in place. Verify the floor mat does not interfere with the pedals.

Service and Maintenance

General Information
General Information 342

Cadillac Premium Care Maintenance
Cadillac Premium Care Maintenance 344

Maintenance Schedule
Maintenance Schedule 344

Special Application Services
Special Application Services 349

Additional Maintenance and Care
Additional Maintenance and Care 350

Recommended Fluids, Lubricants, and Parts
Recommended Fluids and Lubricants 353
Maintenance Replacement Parts 354

Maintenance Records
Maintenance Records 356

General Information

Your vehicle is an important investment. This section describes the required maintenance for the vehicle. Follow this schedule to help protect against major repair expenses resulting from neglect or inadequate maintenance. It may also help to maintain the value of the vehicle if it is sold. It is the responsibility of the owner to have all required maintenance performed.

Your dealer has trained technicians who can perform required maintenance using genuine replacement parts. They have up-to-date tools and equipment for fast and accurate diagnostics. Many dealers have extended evening and Saturday hours, courtesy transportation, and online scheduling to assist with service needs.

Your dealer recognizes the importance of providing competitively priced maintenance and repair services. With trained technicians, the dealer is the place for routine maintenance such as oil

changes and tire rotations and additional maintenance items like tires, brakes, batteries, and wiper blades.

Caution

Damage caused by improper maintenance can lead to costly repairs and may not be covered by the vehicle warranty. Maintenance intervals, checks, inspections, recommended fluids, and lubricants are important to keep the vehicle in good working condition.

The Tire Rotation and Required Services are the responsibility of the vehicle owner. It is recommended to have your dealer perform these services every 12 000 km/7,500 mi. Proper vehicle maintenance helps to keep the vehicle in good working condition, improves fuel economy, and reduces vehicle emissions.

Because of the way people use vehicles, maintenance needs vary. There may need to be more frequent checks and services. The Additional Required Services - Normal are for vehicles that:

- Carry passengers and cargo within recommended limits on the Tire and Loading Information label. See *Vehicle Load Limits* ⇨ *198*.
- Are driven on reasonable road surfaces within legal driving limits.
- Use the recommended fuel. See *Fuel* ⇨ *251*.

Refer to the information in the Maintenance Schedule Additional Required Services - Normal chart.

The Additional Required Services - Severe are for vehicles that are:

- Mainly driven in heavy city traffic in hot weather.
- Mainly driven in hilly or mountainous terrain.
- Frequently towing a trailer.
- Used for high speed or competitive driving.
- Used for taxi, police, or delivery service.

Refer to the information in the Maintenance Schedule Additional Required Services - Severe chart.

⚠ Warning

Performing maintenance work can be dangerous and can cause serious injury. Perform maintenance work only if the required information, proper tools, and equipment are available.
If they are not, see your dealer to have a trained technician do the work. See *Doing Your Own Service Work* ⇨ *263*.

Cadillac Premium Care Maintenance

Your vehicle comes with the Cadillac Premium Care Maintenance. It is a maintenance program that covers select maintenance services during the first 4 years or 80 000 km (50,000 mi), whichever comes first.

Cadillac Premium Care Maintenance covers routine maintenance services, when scheduled in accordance with the owner manual, including:

- Oil changes based on the vehicle's oil life monitor system.
- Tire rotation every 12 000 km (7,500 mi).
- Engine air cleaner filter replacement.
- Passenger compartment air filter replacement.
- Multi-point vehicle inspection (MPVI) performed by a qualified technician.

Cadillac requires that all Cadillac Premium Care Maintenance services be performed by a Cadillac authorized service dealer.

Maintenance Schedule

Owner Checks and Services

At Each Fuel Stop

- Check the engine oil level. See *Engine Oil* ⇨ *270*.

Once a Month

- Check the tire inflation pressures. See *Tire Pressure* ⇨ *306*.
- Inspect the tires for wear. See *Tire Inspection* ⇨ *312*.
- Check the windshield washer fluid level. See *Washer Fluid* ⇨ *281*.

Engine Oil Change

When the CHANGE ENGINE OIL SOON message displays, have the engine oil and filter changed within the next 1 000 km/600 mi. If driven under the best conditions, the engine oil life system may not indicate the need for vehicle service for up to a year. The engine oil and filter must be changed at least once

a year and the oil life system must be reset. Your trained dealer technician can perform this work. If the engine oil life system is reset accidentally, service the vehicle within 5 000 km/3,000 mi since the last service. Reset the oil life system when the oil is changed. See *Engine Oil Life System* ⇨ *272*.

Tire Rotation and Required Services Every 12 000 km/ 7,500 mi

Rotate the tires, if recommended for the vehicle, and perform the following services. See *Tire Rotation* ⇨ *313*.

- Check engine oil level and oil life percentage. If needed, change engine oil and filter, and reset oil life system. See *Engine Oil* ⇨ *270* and *Engine Oil Life System* ⇨ *272*.
- Check engine coolant level. See *Engine Coolant* ⇨ *277*.
- Check windshield washer fluid level. See *Washer Fluid* ⇨ *281*.
- Visually inspect windshield wiper blades for wear, cracking, or contamination. See *Exterior Care* ⇨ *333*. Replace worn or damaged wiper blades. See *Wiper Blade Replacement* ⇨ *286*.
- Check tire inflation pressures. See *Tire Pressure* ⇨ *306*.
- Inspect tire wear. See *Tire Inspection* ⇨ *312*.
- Visually check for fluid leaks.
- Inspect engine air cleaner filter. See *Engine Air Cleaner/ Filter* ⇨ *273*.
- Inspect brake system. See *Exterior Care* ⇨ *333*.
- Visually inspect steering, suspension, and chassis components for damaged, loose, or missing parts or signs of wear. See *Exterior Care* ⇨ *333*.
- Check restraint system components. See *Safety System Check* ⇨ *75*.
- Visually inspect fuel system for damage or leaks.
- Visually inspect exhaust system and nearby heat shields for loose or damaged parts.
- Lubricate body components. See *Exterior Care* ⇨ *333*.
- Check starter switch. See *Starter Switch Check* ⇨ *285*.
- Check automatic transmission shift lock control function. See *Automatic Transmission Shift Lock Control Function Check* ⇨ *285*.
- Check parking brake and automatic transmission park mechanism. See *Park Brake and P (Park) Mechanism Check* ⇨ *286*.
- Check accelerator pedal for damage, high effort, or binding. Replace if needed.
- Visually inspect gas strut for signs of wear, cracks, or other damage. Check the hold open ability of the strut. See your dealer if service is required.
- Inspect sunroof track and seal, if equipped. See *Sunroof* ⇨ *55*.

Maintenance Schedule Additional Required Services - Normal	12 000 km/7,500 mi	24 000 km/15,000 mi	36 000 km/22,500 mi	48 000 km/30,000 mi	60 000 km/37,500 mi	72 000 km/45,000 mi	84 000 km/52,500 mi	96 000 km/60,000 mi	108 000 km/67,500 mi	120 000 km/75,000 mi	132 000 km/82,500 mi	144 000 km/90,000 mi	156 000 km/97,500 mi	168 000 km/105,000 mi	180 000 km/112,500 mi	192 000 km/120,000 mi	204 000 km/127,500 mi	216 000 km/135,000 mi	228 000 km/142,500 mi	240 000 km/150,000 mi
Rotate tires, if recommended for the vehicle, and perform Required Services. Check engine oil level and oil life percentage. Change engine oil and filter, if needed. (1)	✓	✓	✓	✓	✓	✓	✓	✓	✓	✓	✓	✓	✓	✓	✓	✓	✓	✓	✓	✓
Replace passenger compartment air filter. (2)			✓			✓			✓			✓			✓			✓		
Inspect evaporative control system. (3)						✓						✓						✓		
Replace engine air cleaner filter. (4)						✓						✓						✓		
Replace spark plugs. Inspect spark plug wires. (2.0L and 3.0L Twin Turbo Engines)								✓								✓				
Replace spark plugs. Inspect spark plug wires. (3.6L Engine Only)													✓							
Drain and fill engine cooling system. (5)																				✓
Change transfer case fluid, if equipped with AWD. (6)													✓							
Visually inspect accessory drive belts. (7)																				✓
Replace brake fluid. (8)																				

Footnotes — Maintenance Schedule Additional Required Services - Normal

(1) Vehicles with different size front and rear tires do not have tire rotation. See *Tire Rotation* ⇨ *313*.

(2) Or every two years, whichever comes first. More frequent passenger compartment air filter replacement may be needed if driving in areas with heavy traffic, poor air quality, high dust levels, or environmental allergens. Passenger compartment air filter replacement may also be needed if there is reduced airflow, window fogging, or odors. Your GM dealer can help determine when to replace the filter.

(3) Check all fuel and vapor lines and hoses for proper hook-up, routing, and condition.

(4) Or every four years, whichever comes first. If driving in dusty conditions, inspect the filter at each oil change or more often as needed.

(5) Or every five years, whichever comes first. See *Cooling System* ⇨ *275*.

(6) Do not directly power wash the transfer case and/or front/rear axle output seals. High pressure water can overcome the seals and contaminate the transfer case fluid. Contaminated fluid will decrease the life of the transfer case and/or axles and should be replaced.

(7) Or every 10 years, whichever comes first. Inspect for fraying, excessive cracking, or damage; replace, if needed.

(8) Replace brake fluid every five years. See *Brake Fluid* ⇨ *283*.

Maintenance Schedule Additional Required Services - Severe	12 000 km/7,500 mi	24 000 km/15,000 mi	36 000 km/22,500 mi	48 000 km/30,000 mi	60 000 km/37,500 mi	72 000 km/45,000 mi	84 000 km/52,500 mi	96 000 km/60,000 mi	108 000 km/67,500 mi	120 000 km/75,000 mi	132 000 km/82,500 mi	144 000 km/90,000 mi	156 000 km/97,500 mi	168 000 km/105,000 mi	180 000 km/112,500 mi	192 000 km/120,000 mi	204 000 km/127,500 mi	216 000 km/135,000 mi	228 000 km/142,500 mi	240 000 km/150,000 mi
Rotate tires, if recommended for the vehicle, and perform Required Services. Check engine oil level and oil life percentage. Change engine oil and filter, if needed. (1)	✓	✓	✓	✓	✓	✓	✓	✓	✓	✓	✓	✓	✓	✓	✓	✓	✓	✓	✓	✓
Replace passenger compartment air filter. (2)			✓			✓			✓			✓			✓			✓		
Inspect evaporative control system. (3)						✓						✓						✓		
Replace engine air cleaner filter. (4)						✓						✓						✓		
Replace spark plugs. Inspect spark plug wires. (2.0L and 3.0L Twin Turbo Engines)								✓								✓				
Replace spark plugs. Inspect spark plug wires. (3.6L Engine Only)													✓							
Change automatic transmission fluid and filter.						✓						✓						✓		
Change transfer case fluid, if equipped with AWD. (5)						✓						✓						✓		
Change rear axle fluid.						✓						✓						✓		
Change front axle fluid, if equipped with AWD.						✓						✓						✓		
Drain and fill engine cooling system. (6)																				✓
Visually inspect accessory drive belts. (7)																				✓
Replace brake fluid. (8)																				

Footnotes — Maintenance Schedule Additional Required Services - Severe

(1) Vehicles with different size front and rear tires do not have tire rotation. See *Tire Rotation* ⇨ *313*.

(2) Or every two years, whichever comes first. More frequent passenger compartment air filter replacement may be needed if driving in areas with heavy traffic, poor air quality, high dust levels, or environmental allergens. Passenger compartment air filter replacement may also be needed if there is reduced airflow, window fogging, or odors. Your GM dealer can help determine when to replace the filter.

(3) Check all fuel and vapor lines and hoses for proper hook-up, routing, and condition.

(4) Or every four years, whichever comes first. If driving in dusty conditions, inspect the filter at each oil change or more often as needed.

(5) Do not directly power wash the transfer case and/or front/rear axle output seals. High pressure water can overcome the seals and contaminate the transfer case fluid. Contaminated fluid will decrease the life of the transfer case and/or axles and should be replaced.

(6) Or every five years, whichever comes first. See *Cooling System* ⇨ *275*.

(7) Or every 10 years, whichever comes first. Inspect for fraying, excessive cracking, or damage; replace, if needed.

(8) Replace brake fluid every five years. See *Brake Fluid* ⇨ *283*.

Special Application Services

- Severe Commercial Use Vehicles Only: Lubricate chassis components every 5 000 km/ 3,000 mi.
- Have underbody flushing service performed. See "Underbody Maintenance" in *Exterior Care* ⇨ *333*.

Additional Maintenance and Care

Your vehicle is an important investment and caring for it properly may help to avoid future costly repairs. To maintain vehicle performance, additional maintenance services may be required.

It is recommended that your dealer perform these services — their trained dealer technicians know your vehicle best. Your dealer can also perform a thorough assessment with a multi-point inspection to recommend when your vehicle may need attention.

The following list is intended to explain the services and conditions to look for that may indicate services are required.

Battery

The 12-volt battery supplies power to start the engine and operate any additional electrical accessories.

- To avoid break-down or failure to start the vehicle, maintain a battery with full cranking power.
- Trained dealer technicians have the diagnostic equipment to test the battery and ensure that the connections and cables are corrosion-free.

Belts

- Belts may need replacing if they squeak or show signs of cracking or splitting.
- Trained dealer technicians have access to tools and equipment to inspect the belts and recommend adjustment or replacement when necessary.

Brakes

Brakes stop the vehicle and are crucial to safe driving.

- Signs of brake wear may include chirping, grinding, or squealing noises, or difficulty stopping.
- Trained dealer technicians have access to tools and equipment to inspect the brakes and recommend quality parts engineered for the vehicle.

Fluids

Proper fluid levels and approved fluids protect the vehicle's systems and components. See *Recommended Fluids and Lubricants* ⇨ *353* for GM approved fluids.

- Engine oil and windshield washer fluid levels should be checked at every fuel fill.
- Instrument cluster lights may come on to indicate that fluids may be low and need to be filled.

Hoses

Hoses transport fluids and should be regularly inspected to ensure that there are no cracks or leaks. With a multi-point inspection, your dealer can inspect the hoses and advise if replacement is needed.

Lamps

Properly working headlamps, taillamps, and brake lamps are important to see and be seen on the road.

- Signs that the headlamps need attention include dimming, failure to light, cracking, or damage. The brake lamps need to be checked periodically to ensure that they light when braking.
- With a multi-point inspection, your dealer can check the lamps and note any concerns.

Shocks and Struts

Shocks and struts help aid in control for a smoother ride.

- Signs of wear may include steering wheel vibration, bounce/sway while braking, longer stopping distance, or uneven tire wear.
- As part of the multi-point inspection, trained dealer technicians can visually inspect the shocks and struts for signs of leaking, blown seals, or damage, and can advise when service is needed.

Tires

Tires need to be properly inflated, rotated, and balanced. Maintaining the tires can save money and fuel, and can reduce the risk of tire failure.

- Signs that the tires need to be replaced include three or more visible treadwear indicators; cord or fabric showing through the rubber; cracks or cuts in the tread or sidewall; or a bulge or split in the tire.
- Trained dealer technicians can inspect and recommend the right tires. Your dealer can also provide tire/wheel balancing services to ensure smooth vehicle operation at all speeds. Your dealer sells and services name brand tires.

Vehicle Care

To help keep the vehicle looking like new, vehicle care products are available from your dealer. For information on how to clean and protect the vehicle's interior and exterior, see *Interior Care* ⇨ *338* and *Exterior Care* ⇨ *333*.

Wheel Alignment

Wheel alignment is critical for ensuring that the tires deliver optimal wear and performance.

- Signs that the alignment may need to be adjusted include pulling, improper vehicle handling, or unusual tire wear.
- Your dealer has the required equipment to ensure proper wheel alignment.

Windshield

For safety, appearance, and the best viewing, keep the windshield clean and clear.

- Signs of damage include scratches, cracks, and chips.
- Trained dealer technicians can inspect the windshield and recommend proper replacement if needed.

Wiper Blades

Wiper blades need to be cleaned and kept in good condition to provide a clear view.

- Signs of wear include streaking, skipping across the windshield, and worn or split rubber.
- Trained dealer technicians can check the wiper blades and replace them when needed.

Recommended Fluids, Lubricants, and Parts

Recommended Fluids and Lubricants

Usage	Fluid/Lubricant
Engine Oil	Engine oil meeting the dexos1™ specification of the proper SAE viscosity grade. AC Delco dexos1 Synthetic Blend is recommended. See *Engine Oil* ⇨ *270*.
Engine Coolant	50/50 mixture of clean, drinkable water and use only DEX-COOL® Coolant. See *Engine Coolant* ⇨ *277*.
Hydraulic Brake System	DOT 3 Hydraulic Brake Fluid (GM Part No. 19299818, in Canada 19299819).
Windshield Washer	Automotive windshield washer fluid that meets regional freeze protection requirements.
Automatic Transmission	DEXRON®-HP Automatic Transmission Fluid (GM Part No. 19300536, in Canada 19300537).
Transfer Case (All-Wheel Drive)	Transfer Case Fluid (GM Part No. 19331044, in Canada 19331045).
Rear Axle	SAE 75W-90 Synthetic Axle Lubricant (GM Part No. 88863089, in Canada 88863090) meeting GM Specification 9986285.
Rear Axle/Front Axle (All-Wheel Drive)	SAE 75W-90 Synthetic Axle Lubricant (GM Part No. 88863089, in Canada 88863090).
Hood Latch Assembly, Pivots, Spring Anchor, and Release Pawl	Lubriplate Lubricant Aerosol (GM Part No. 89021668, in Canada 89021674) or lubricant meeting requirements of NLGI #2, Category LB or GC-LB.

Usage	Fluid/Lubricant
Key Lock Cylinders, Hood and Door Hinges	Multi-Purpose Lubricant, Superlube (GM Part No. 12346241, in Canada 10953474).
Weatherstrip Conditioning	Weatherstrip Lubricant (GM Part No. 3634770, in Canada 10953518) or Dielectric Silicone Grease (GM Part No. 12345579, in Canada 10953481).

Maintenance Replacement Parts

Replacement parts identified below by name, part number, or specification can be obtained from your dealer.

Part	GM Part Number	ACDelco Part Number
Engine Air Cleaner/Filter		
2.0L L4 Engine	23184137	A3205C
3.0L V6 Twin Turbo Engine (Driver Side)	23441383	A3207C
3.0L V6 Twin Turbo Engine (Passenger Side)	23450879	A3206C
3.6L V6 Engine	23458700	A3204C
Engine Oil Filter		
2.0L L4 Engine	12640445	PF64
3.0L V6 Twin Turbo Engine	19330000	PF63E
3.6L V6 Engine	19330000	PF63E
Passenger Compartment Air Filter	13356916	CF185

Part	GM Part Number	ACDelco Part Number
Spark Plugs		
2.0L L4 Engine	12647827	41-125
3.0L V6 Twin Turbo Engine	12650283	41-131
3.6L V6 Engine	12646780	41-130
Wiper Blades		
Driver Side – 60 cm (23.62 in)	13227404	—
Passenger Side – 45 cm (17.72 in)	25882578	—

Maintenance Records

After the scheduled services are performed, record the date, odometer reading, who performed the service, and the type of services performed in the boxes provided. Retain all maintenance receipts.

Date	Odometer Reading	Serviced By	Maintenance Stamp	Services Performed

Technical Data

Vehicle Identification
Vehicle Identification Number (VIN) 357
Service Parts Identification Label 357

Vehicle Data
Capacities and Specifications 358
Engine Drive Belt Routing 360

Vehicle Identification

Vehicle Identification Number (VIN)

This legal identifier is in the front corner of the instrument panel, on the left side of the vehicle. It can be seen through the windshield from outside. The VIN also appears on the Vehicle Certification and Service Parts labels and certificates of title and registration.

Engine Identification

The eighth character in the VIN is the engine code. This code identifies the vehicle's engine, specifications, and replacement parts. See “Engine Specifications” under *Capacities and Specifications* ⇨ *358* for the vehicle's engine code.

Service Parts Identification Label

This label, behind the access panel in the trunk on the passenger side, has the following information:

- Vehicle Identification Number (VIN).
- Model designation.
- Paint information.
- Production options and special equipment.

Do not remove this label from the vehicle.

Vehicle Data

Capacities and Specifications

The following approximate capacities are given in metric and English conversions. See *Recommended Fluids and Lubricants* ⇨ *353* for more information.

Application	Capacities	
	Metric	English
Air Conditioning Refrigerant	For the air conditioning system refrigerant type and charge amount, see the refrigerant label under the hood. See your dealer for more information.	
Cooling System – Engine		
2.0L L4 Engine	8.6 L	9.1 qt
2.0L L4 Engine with Rear A/C	10.3 L	10.9 qt
3.0L V6 Twin Turbo Engine	10.6 L	11.2 qt
3.0L V6 Twin Turbo Engine with Rear A/C	12.3 L	13.0 qt
3.0L V6 Twin Turbo Engine with Rear A/C and Auxiliary Radiator	13.2 L	13.9 qt
3.6L V6 Engine	9.8 L	10.4 qt
3.6L V6 Engine with Rear A/C	11.4 L	12.0 qt
Cooling System – Twin Turbo		
3.0L V6 Engine Intercoolers	3.2 L	3.4 qt

Application	Capacities	
	Metric	English
Engine Oil with Filter		
2.0L L4 Engine	4.7 L	5.0 qt
3.0L V6 Twin Turbo Engine	5.7 L	6.0 qt
3.6L V6 Engine	6.15 L	6.5 qt
Fuel Tank	72.7 L	19.2 gal
Transfer Case – AWD	0.8 L	0.85 qt
Wheel Nut Torque	150 N•m	110 lb ft
All capacities are approximate. When adding, be sure to fill to the approximate level, as recommended in this manual. Recheck fluid level after filling.		

Engine Specifications

Engine	VIN Code	Transmission	Spark Plug Gap
2.0L L4 Engine	X	Automatic	0.75–0.90 mm (0.030–0.035 in)
3.0L V6 Twin Turbo Engine	6	Automatic	0.65–0.75 mm (0.26–0.030 in)
3.6L V6 Engine	S	Automatic	0.80–0.90 mm (0.031–0.035 in)

Engine Drive Belt Routing

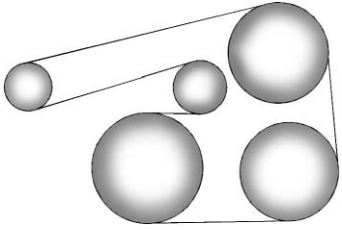

2.0L L4 Engine

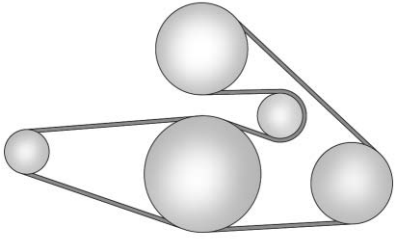

3.0L V6 Twin Turbo Engine

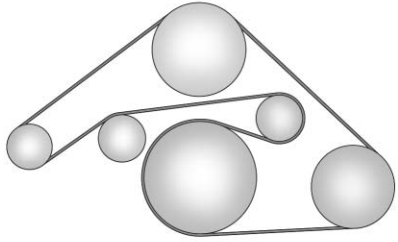

3.6L V6 Engine

Customer Information

Customer Information
Customer Satisfaction Procedure 361
Customer Assistance Offices 363
Customer Assistance for Text Telephone (TTY) Users 364
Online Owner Center 364
Roadside Service 364
Scheduling Service Appointments 367
Courtesy Transportation Program 367
Collision Damage Repair 368
Service Publications Ordering Information 370
Radio Frequency Statement 371

Reporting Safety Defects
Reporting Safety Defects to the United States Government 371
Reporting Safety Defects to the Canadian Government 372
Reporting Safety Defects to General Motors 372

Vehicle Data Recording and Privacy
Vehicle Data Recording and Privacy 372
Event Data Recorders 373
OnStar® 373
Infotainment System 374

Customer Information

Customer Satisfaction Procedure

Your satisfaction and goodwill are important to your dealer and to Cadillac. Normally, any concerns with the sales transaction or the operation of the vehicle will be resolved by your dealer's sales or service departments. Sometimes, however, despite the best intentions of all concerned, misunderstandings can occur. If your concern has not been resolved to your satisfaction, the following steps should be taken:

STEP ONE : Discuss your concern with a member of dealership management. Normally, concerns can be quickly resolved at that level. If the matter has already been reviewed with the sales, service or parts manager, contact the owner of your dealership or the general manager.

STEP TWO : If after contacting a member of dealership management, it appears your concern cannot be

resolved by your dealership without further help, in the U.S., call the Cadillac Customer Assistance Center at 1-800–458–8006. In Canada, call the Canadian Cadillac Customer Care Centre at 1-888-446-2000.

We encourage you to call the toll-free number in order to give your inquiry prompt attention. Have the following information available to give the Customer Assistance representative:

- Vehicle Identification Number (VIN). This is available from the vehicle registration or title, or the plate at the top left of the instrument panel and visible through the windshield.
- Dealership name and location.
- Vehicle delivery date and present mileage.

When contacting Cadillac, remember that your concern will likely be resolved at a dealer's facility. That is why we suggest following Step One first.

STEP THREE — U.S. Owners : Both General Motors and your dealer are committed to making sure you are completely satisfied with the new vehicle. However, if you continue to remain unsatisfied after following the procedure outlined in Steps One and Two, you can file with the Better Business Bureau (BBB) Auto Line® Program to enforce your rights.

The BBB Auto Line Program is an out-of-court program administered by the Council of Better Business Bureaus to settle automotive disputes regarding vehicle repairs or the interpretation of the New Vehicle Limited Warranty. Although you may be required to resort to this informal dispute resolution program prior to filing a court action, use of the program is free of charge and your case will generally be heard within 40 days. If you do not agree with the decision given in your case, you may reject it and proceed with any other venue for relief available to you.

You may contact the BBB Auto Line Program using the toll-free telephone number or write them at the following address:

BBB Auto Line Program
Council of Better Business Bureaus, Inc.
3033 Wilson Boulevard
Suite 600
Arlington, VA 22201

Telephone: 1-800-955-5100
http://www.bbb.org/council/programs-services/dispute-handling-and-resolution/bbb-auto-line

This program is available in all 50 states and the District of Columbia. Eligibility is limited by vehicle age, mileage, and other factors. General Motors reserves the right to change eligibility limitations and/or discontinue its participation in this program.

STEP THREE — Canadian Owners : In the event that you do not feel your concerns have been addressed after following the procedure outlined in Steps One and Two, General Motors of Canada

Company wants you to be aware of its participation in a no-charge mediation/arbitration program. General Motors of Canada Company has committed to binding arbitration of owner disputes involving factory-related vehicle service claims. The program provides for the review of the facts involved by an impartial third party arbiter, and may include an informal hearing before the arbiter. The program is designed so that the entire dispute settlement process, from the time you file your complaint to the final decision, should be completed in about 70 days. We believe our impartial program offers advantages over courts in most jurisdictions because it is informal, quick, and free of charge.

For further information concerning eligibility in the Canadian Motor Vehicle Arbitration Plan (CAMVAP), call toll-free 1-800-207-0685, or call the Cadillac Customer Care Centre, 1-888-446-2000, or write to:

General Motors Cadillac Customer Care Centre
General Motors of Canada Company
Mail Code: CA1-163-005
1908 Colonel Sam Drive
Oshawa, Ontario L1H 8P7

The inquiry should be accompanied by the Vehicle Identification Number (VIN).

Customer Assistance Offices

Cadillac encourages customers to call the toll-free number for assistance. However, if a customer wishes to write or e-mail Cadillac, the letter should be addressed to:

United States and Puerto Rico

Cadillac Customer Assistance Center
Cadillac Motor Car Division
P.O. Box 33169
Detroit, MI 48232-5169
www.Cadillac.com

1-800-458-8006
1-800-833-2622 (For Text Telephone devices (TTYs))
Roadside Service: 1-800-224-1400

From U.S. Virgin Islands:

1-800-496-9994

Canada

General Motors of Canada Company
Cadillac Customer Care Centre,
Mail Code: CA1-163-005
1908 Colonel Sam Drive
Oshawa, Ontario L1H 8P7
www.gm.ca

1-888-446-2000 (English/French)
Cadillac Roadside Service:
1-800-882-1112

Overseas

Contact the local General Motors Business Unit.

Customer Assistance for Text Telephone (TTY) Users

To assist customers who are deaf, hard of hearing, or speech-impaired and who use Text Telephones (TTYs), Cadillac has TTY equipment available at its Customer Assistance Center. Any TTY user can communicate with Cadillac by dialing: 1-800-833-2622. TTY users in Canada can dial 1-800-263-3830.

Online Owner Center

Online Owner Experience (U.S.) my.cadillac.com

The Cadillac online owner experience allows interaction with Cadillac and keeps important vehicle-specific information in one place.

Membership Benefits

: Download owner manuals and view vehicle-specific how-to videos.

: View maintenance schedules, alerts, and OnStar onboard vehicle diagnostic information. Schedule service appointments.

: View printable dealer-recorded service records and self-recorded service records.

: Select a dealer and view locations, maps, phone numbers, and hours.

: Track your vehicle's warranty information.

: View active recalls or search by Vehicle Identification Number (VIN). See *Vehicle Identification Number (VIN)* ⇨ *357* or *Vehicle Identification Number (VIN)* ⇨ *357*.

: View GM Card, SiriusXM Satellite radio (if equipped), and OnStar account information.

: Chat with online help representatives.

See my.cadillac.com to register your vehicle.

Cadillac Owner Centre (Canada) cadillacowner.ca

Visit the Cadillac Owner Centre:

- Chat live with online help representatives.
- Locate owner resources such as lease-end, financing, and warranty information.
- Retrieve favorite articles, quizzes, tips, and multimedia galleries organized into the Featured Articles and Auto Care Sections.
- Download owner manuals.
- Find Cadillac-recommended maintenance services.

Roadside Service

U.S.: 1-800-224-1400.

Canada: 1-800-882-1112.

Text Telephone (TTY) Users (U.S. Only): 1-888-889-2438.

Service is available 24 hours a day, 365 days a year.

Calling for Service

When calling Roadside Service, have the following information ready:

- Your name, home address, and home telephone number.
- Telephone number of your location.
- Location of the vehicle.
- Model, year, color, and license plate number of the vehicle.
- Odometer reading, Vehicle Identification Number (VIN), and delivery date of the vehicle.
- Description of the problem.

Coverage

Services are provided for the duration of the vehicle's powertrain warranty.

In the U.S., anyone driving the vehicle is covered. In Canada, a person driving the vehicle without permission from the owner is not covered.

Roadside Service is not a part of the New Vehicle Limited Warranty. General Motors North America and Cadillac reserve the right to make any changes or discontinue the Roadside Service program at any time without notification.

General Motors North America and Cadillac reserve the right to limit services or payment to an owner or driver if they decide the claims are made too often, or the same type of claim is made many times.

Cadillac Owner Privileges™

- **Emergency Fuel Delivery:** Delivery of enough fuel for the vehicle to get to the nearest service station.
- **Lock-Out Service:** Service to unlock the vehicle if you are locked out. A remote unlock may be available if you have OnStar. For security reasons, the driver must present identification before this service is given.
- **Emergency Tow from a Public Road or Highway:** Tow to the nearest Cadillac dealer for warranty service, or if the vehicle was in a crash and cannot be driven. Assistance is not given when the vehicle is stuck in the sand, mud, or snow.
- **Flat Tire Change:** Service to change a flat tire with a spare tire. The spare tire, if equipped, must be in good condition and properly inflated. It is your responsibility for the repair or replacement of the tire if it is not covered by the warranty.
- **Battery Jump Start:** Service to jump start a dead battery.
- **Trip Interruption Benefits and Service:** If your trip is interrupted due to a warranty failure, incidental expenses may be reimbursed during the Powertrain warranty period. Items considered are hotel, meals, and rental car or a

vehicle being delivered back to the customer, up to 805 km (500 mi).

Cadillac Technician Roadside Service (U.S. Only)

Cadillac's exceptional Roadside Service is more than an auto club or towing service. It provides every Cadillac owner in the United States with the advantage of contacting a Cadillac advisor and, where available, a Cadillac trained dealer technician who can provide on-site service.

A dealer technician will travel to your location within a 30-mile radius of a participating Cadillac dealership. If beyond this radius, we will arrange to have your car towed to the nearest Cadillac dealership. Each technician travels with a specially equipped service vehicle complete with the necessary Cadillac parts and tools required to handle most roadside repairs.

Services Not Included in Roadside Service

- Impound towing caused by violation of any laws.
- Legal fines.
- Mounting, dismounting, or changing of snow tires, chains, or other traction devices.

Service is not provided if a vehicle is in an area that is not accessible to the service vehicle or is not a regularly traveled or maintained public road, which includes ice and winter roads. Off-road use is not covered.

Services Specific to Canadian-Purchased Vehicles

- **Fuel delivery:** Reimbursement is up to 7 liters. Diesel fuel delivery may be restricted. Propane and other fuels are not provided through this service.
- **Lock-Out Service:** Vehicle registration is required.
- **Trip Interruption Benefits and Service:** Pre-authorization, original detailed receipts, and a copy of the repair orders are required. Once authorization has been received, the Roadside Service advisor will help you make arrangements and explain how to receive payment.
- **Alternative Service:** If assistance cannot be provided right away, the Roadside Service advisor may give you permission to get local emergency road service. You will receive payment, up to $100, after sending the original receipt to Roadside Service. Mechanical failures may be covered, however any cost for parts and labor for repairs not covered by the warranty are the owner responsibility.

Scheduling Service Appointments

When the vehicle requires warranty service, contact your dealer and request an appointment. By scheduling a service appointment and advising the service consultant of your transportation needs, your dealer can help minimize your inconvenience.

If the vehicle cannot be scheduled into the service department immediately, keep driving it until it can be scheduled for service, unless, of course, the problem is safety related. If it is, please call your dealership, let them know this, and ask for instructions.

If your dealer requests you to bring the vehicle for service, you are urged to do so as early in the work day as possible to allow for same-day repair.

Courtesy Transportation Program

To enhance your ownership experience, we and our participating dealers are proud to offer Courtesy Transportation, a customer support program for vehicles with the Bumper-to-Bumper (Base Warranty Coverage period in Canada), extended powertrain, and/or hybrid-specific warranties in both the U.S. and Canada.

Several Courtesy Transportation options are available to assist in reducing inconvenience when warranty repairs are required.

Courtesy Transportation is not a part of the New Vehicle Limited Warranty. A separate booklet entitled “Limited Warranty and Owner Assistance Information” furnished with each new vehicle provides detailed warranty coverage information.

Transportation Options

Warranty service can generally be completed while you wait. However, if you are unable to do so, your dealer may offer the following transportation options:

Shuttle Service

This includes one-way or round-trip shuttle service within reasonable time and distance parameters of your dealer's area.

Public Transportation or Fuel Reimbursement

If overnight warranty repairs are needed, and public transportation is used, the expense must be supported by original receipts and within the maximum amount allowed by GM for shuttle service. If U.S. customers arrange their own transportation, limited reimbursement for reasonable fuel expenses may be available. Claim amounts should reflect actual costs and be supported by original receipts. See your dealer for information.

Courtesy Rental Vehicle

For an overnight warranty repair, the dealer may provide an available courtesy rental vehicle or provide for reimbursement of a rental vehicle. Reimbursement is limited and must be supported by original receipts as well as a signed and completed rental agreement and meet state/provincial, local, and rental vehicle provider requirements.
Requirements vary and may include minimum age requirements, insurance coverage, credit card, etc. Additional fees such as fuel usage charges, taxes, levies, usage fees, excessive mileage, or rental usage beyond the completion of the repair are also your responsibility.

It may not be possible to provide a like vehicle as a courtesy rental.

Additional Program Information

All program options, such as shuttle service, may not be available at every dealer. Contact your dealer for specific availability.

General Motors reserves the right to unilaterally modify, change, or discontinue Courtesy Transportation at any time and to resolve all questions of claim eligibility pursuant to the terms and conditions described herein at its sole discretion.

Collision Damage Repair

If the vehicle is involved in a collision and it is damaged, have the damage repaired by a qualified technician using the proper equipment and quality replacement parts. Poorly performed collision repairs diminish the vehicle resale value, and safety performance can be compromised in subsequent collisions.

Collision Parts

Genuine GM Collision parts are new parts made with the same materials and construction methods as the parts with which the vehicle was originally built. Genuine GM Collision parts are the best choice to ensure that the vehicle's designed appearance, durability, and safety are preserved. The use of Genuine GM parts can help maintain the GM New Vehicle Limited Warranty.

Recycled original equipment parts may also be used for repair. These parts are typically removed from vehicles that were total losses in prior crashes. In most cases, the parts being recycled are from undamaged sections of the vehicle. A recycled original equipment GM part may be an acceptable choice to maintain the vehicle's originally designed appearance and safety performance; however, the history of these parts is not known. Such parts are not covered by the GM New Vehicle Limited Warranty, and any related failures are not covered by that warranty.

Aftermarket collision parts are also available. These are made by companies other than GM and may not have been tested for the vehicle. As a result, these parts may fit poorly, exhibit premature durability/corrosion problems, and may not perform properly in subsequent collisions. Aftermarket parts are not covered by the GM New Vehicle

Limited Warranty, and any vehicle failure related to such parts is not covered by that warranty.

Repair Facility

GM also recommends that you choose a collision repair facility that meets your needs before you ever need collision repairs. Your dealer may have a collision repair center with GM-trained technicians and state-of-the-art equipment, or be able to recommend a collision repair center that has GM-trained technicians and comparable equipment.

Insuring the Vehicle

Protect your investment in the GM vehicle with comprehensive and collision insurance coverage. There are significant differences in the quality of coverage afforded by various insurance policy terms. Many insurance policies provide reduced protection to the GM vehicle by limiting compensation for damage repairs by using aftermarket collision parts. Some insurance companies will not specify aftermarket collision parts. When purchasing insurance, we recommend that you ensure that the vehicle will be repaired with GM original equipment collision parts. If such insurance coverage is not available from your current insurance carrier, consider switching to another insurance carrier.

If the vehicle is leased, the leasing company may require you to have insurance that ensures repairs with Genuine GM Original Equipment Manufacturer (OEM) parts or Genuine Manufacturer replacement parts. Read the lease carefully, as you may be charged at the end of the lease for poor quality repairs.

If a Crash Occurs

If there has been an injury, call emergency services for help. Do not leave the scene of a crash until all matters have been taken care of. Move the vehicle only if its position puts you in danger, or you are instructed to move it by a police officer.

Give only the necessary information to police and other parties involved in the crash.

For emergency towing see *Roadside Service* ⇨ *364*.

Gather the following information:

- Driver name, address, and telephone number.
- Driver license number.
- Owner name, address, and telephone number.
- Vehicle license plate number.
- Vehicle make, model, and model year.
- Vehicle Identification Number (VIN).
- Insurance company and policy number.
- General description of the damage to the other vehicle.

Choose a reputable repair facility that uses quality replacement parts. See “Collision Parts” earlier in this section.

If the airbag has inflated, see *What Will You See after an Airbag Inflates?* ⇨ *81*.

Managing the Vehicle Damage Repair Process

In the event that the vehicle requires damage repairs, GM recommends that you take an active role in its repair. If you have a pre-determined repair facility of choice, take the vehicle there, or have it towed there. Specify to the facility that any required replacement collision parts be original equipment parts, either new Genuine GM parts or recycled original GM parts. Remember, recycled parts will not be covered by the GM vehicle warranty.

Insurance pays the bill for the repair, but you must live with the repair. Depending on your policy limits, your insurance company may initially value the repair using aftermarket parts. Discuss this with the repair professional, and insist on Genuine GM parts. Remember, if the vehicle is leased, you may be obligated to have the vehicle repaired with Genuine GM parts, even if your insurance coverage does not pay the full cost.

If another party's insurance company is paying for the repairs, you are not obligated to accept a repair valuation based on that insurance company's collision policy repair limits, as you have no contractual limits with that company. In such cases, you can have control of the repair and parts choices as long as the cost stays within reasonable limits.

Service Publications Ordering Information

Service Manuals

Service Manuals have the diagnosis and repair information on the engines, transmission, axle, suspension, brakes, electrical, steering, body, etc.

Service Bulletins

Service Bulletins give additional technical service information needed to knowledgeably service General Motors cars and trucks. Each bulletin contains instructions to assist in the diagnosis and service of the vehicle.

Owner Information

Owner publications are written specifically for owners and intended to provide basic operational information about the vehicle. The Owner Manual includes the Maintenance Schedule for all models.

In-Portfolio: Includes a Portfolio, Owner Manual, and Warranty Manual.

RETAIL SELL PRICE: $35.00 – $40.00 (U.S.) plus handling and shipping fees.

Without Pouch: Owner Manual only.

RETAIL SELL PRICE: $25.00 (U.S.) plus handling and shipping fees.

Current and Past Models

Technical Service Bulletins and Manuals are available for current and past model GM vehicles.

ORDER TOLL FREE:
1-800-551-4123 Monday – Friday
8:00 AM – 6:00 PM Eastern Time

For Credit Card Orders Only (VISA-MasterCard-Discover), see Helm, Inc. at: www.helminc.com.

Or write to:

Helm, Incorporated
Attention: Customer Service
47911 Halyard Drive
Plymouth, MI 48170

Prices are subject to change without notice and without incurring obligation. Allow ample time for delivery.

All listed prices are quoted in U.S. funds. Make checks payable in U.S. funds.

Radio Frequency Statement

This vehicle has systems that operate on a radio frequency that complies with Part 15/Part 18 of the Federal Communications Commission (FCC) rules and with Industry Canada Standards RSS-GEN/210/216/220/251/310, ICES-001.

Operation is subject to the following two conditions:

1. The device may not cause harmful interference.
2. The device must accept any interference received, including interference that may cause undesired operation of the device.

Changes or modifications to any of these systems by other than an authorized service facility could void authorization to use this equipment.

Reporting Safety Defects

Reporting Safety Defects to the United States Government

If you believe that your vehicle has a defect which could cause a crash or could cause injury or death, you should immediately inform the National Highway Traffic Safety Administration (NHTSA) in addition to notifying General Motors.

If NHTSA receives similar complaints, it may open an investigation, and if it finds that a safety defect exists in a group of vehicles, it may order a recall and remedy campaign. However, NHTSA cannot become involved in individual problems between you, your dealer, or General Motors.

To contact NHTSA, you may call the Vehicle Safety Hotline toll-free at 1-888-327-4236 (TTY: 1-800-424-9153); go to *http://www.safercar.gov;* or write to:

Administrator, NHTSA
1200 New Jersey Avenue, S.E.
Washington, D.C. 20590

You can also obtain other information about motor vehicle safety from *http://www.safercar.gov*.

Reporting Safety Defects to the Canadian Government

If you live in Canada, and you believe that the vehicle has a safety defect, notify Transport Canada immediately, and notify General Motors of Canada Company. Call Transport Canada at 1-800-333-0510 or write to:

Transport Canada
Road Safety Branch
80 rue Noel
Gatineau, QC J8Z 0A1

Reporting Safety Defects to General Motors

In addition to notifying NHTSA (or Transport Canada) in a situation like this, notify General Motors.

Call 1-800-458-8006, or write:

Cadillac Customer Assistance Center
Cadillac Motor Car Division
P.O. Box 33169
Detroit, MI 48232-5169

In Canada, call 1-888-446-2000, or write:

Canadian Cadillac Customer Care Centre, Mail Code: CA1-163-005
General Motors of Canada Company
1908 Colonel Sam Drive
Oshawa, Ontario L1H 8P7

Vehicle Data Recording and Privacy

The vehicle has a number of computers that record information about the vehicle's performance and how it is driven. For example, the vehicle uses computer modules to monitor and control engine and transmission performance, to monitor the conditions for airbag deployment and deploy them in a crash, and, if equipped, to provide antilock braking to help the driver control the vehicle. These modules may store data to help the dealer technician service the vehicle. Some modules may also store data about how the vehicle is operated, such as rate of fuel consumption or average speed. These modules may retain personal preferences, such as radio presets, seat positions, and temperature settings.

Event Data Recorders

This vehicle is equipped with an event data recorder (EDR). The main purpose of an EDR is to record, in certain crash or near crash-like situations, such as an air bag deployment or hitting a road obstacle, data that will assist in understanding how a vehicle's systems performed. The EDR is designed to record data related to vehicle dynamics and safety systems for a short period of time, typically 30 seconds or less. The EDR in this vehicle is designed to record such data as:

- How various systems in your vehicle were operating;
- Whether or not the driver and passenger safety belts were buckled/fastened;
- How far (if at all) the driver was depressing the accelerator and/or brake pedal; and,
- How fast the vehicle was traveling.

These data can help provide a better understanding of the circumstances in which crashes and injuries occur.

Note

EDR data are recorded by your vehicle only if a non-trivial crash situation occurs; no data are recorded by the EDR under normal driving conditions and no personal data (e.g., name, gender, age, and crash location) are recorded. However, other parties, such as law enforcement, could combine the EDR data with the type of personally identifying data routinely acquired during a crash investigation.

To read data recorded by an EDR, special equipment is required, and access to the vehicle or the EDR is needed. In addition to the vehicle manufacturer, other parties, such as law enforcement, that have the special equipment, can read the information if they have access to the vehicle or the EDR.

GM will not access these data or share it with others except: with the consent of the vehicle owner or, if the vehicle is leased, with the consent of the lessee; in response to an official request by police or similar government office; as part of GM's defense of litigation through the discovery process; or, as required by law. Data that GM collects or receives may also be used for GM research needs or may be made available to others for research purposes, where a need is shown and the data is not tied to a specific vehicle or vehicle owner.

OnStar®

If the vehicle is equipped with OnStar® and has an active subscription, additional data may be collected through the OnStar system. This includes information about the vehicle's operation; collisions involving the vehicle; the use of the vehicle and its features; and, in certain situations, the location and approximate GPS speed of the vehicle. Refer to the

OnStar Terms and Conditions and Privacy Statement on the OnStar website.

See *OnStar Additional Information* ⇨ *379*.

Infotainment System

If the vehicle is equipped with a navigation system as part of the infotainment system, use of the system may result in the storage of destinations, addresses, telephone numbers, and other trip information. See the infotainment manual for information on stored data and for deletion instructions.

OnStar

OnStar Overview
OnStar Overview 375

OnStar Services
Emergency 376
Security 376
Navigation 376
Connections 377
Diagnostics 379

OnStar Additional Information
OnStar Additional Information 379

OnStar Overview

Voice Command Button

Blue OnStar Button

Red Emergency Button

This vehicle may be equipped with a comprehensive, in-vehicle system that can connect to an OnStar Advisor for Emergency, Security, Navigation, Connections, and Diagnostics Services. OnStar services may require a paid subscription and data plan. OnStar requires the vehicle battery and electrical system, cellular service, and GPS satellite signals to be available and operating. OnStar acts as a link to existing emergency service providers. OnStar may collect information about you and your vehicle, including location information. See OnStar's Terms & Conditions and Privacy Statement for more details including system limitations at www.onstar.com (U.S.) or www.onstar.ca (Canada).

The OnStar system status light is next to the OnStar buttons. If the status light is:

- Solid Green: System is ready.
- Flashing Green: On a call.
- Red: Indicates a problem.
- Off: System is off. Press twice to speak with an OnStar Advisor.

Press or call 1-888-4ONSTAR (1-888-466-7827) to speak to an Advisor.

Press to:

- Make a call, end a call, or answer an incoming call.
- Give OnStar Hands-Free Calling voice commands.
- Give OnStar Turn-by-Turn Navigation voice commands.

- Obtain the Wi-Fi® hotspot name or SSID and password, if equipped.

Press On to connect to an Advisor to:

- Verify account information or update contact information.
- Get driving directions.
- Receive a Diagnostic check of the vehicle's key operating systems.
- Receive Roadside Assistance.
- Manage Wi-Fi Settings, if equipped.

Press SOS to get a priority connection to an OnStar Advisor available 24/7 to:

- Get help for an emergency.
- Be a Good Samaritan or respond to an AMBER Alert.
- Get assistance in severe weather or other crisis situations and find evacuation routes.

OnStar Services

Emergency

Emergency Services require an active, OnStar subscription plan (excludes Basic Plan). With Automatic Crash Response, built-in sensors can automatically alert a specially trained OnStar Advisor who is immediately connected in to the vehicle to help.

Press SOS for a priority connection to an OnStar Advisor who can contact emergency service providers, direct them to your exact location, and relay important information.

With OnStar Crisis Assist, specially trained Advisors are available 24 hours a day, 7 days a week, to provide a central point of contact, assistance, and information during a crisis.

With Roadside Assistance, Advisors can locate a nearby service provider to help with a flat tire, a battery jump, or an empty gas tank.

Security

If equipped, OnStar provides these services:

- With Stolen Vehicle Assistance, OnStar Advisors can use GPS to pinpoint the vehicle and help authorities quickly recover it.
- With Remote Ignition Block, if equipped, OnStar can block the engine from being restarted.
- With Stolen Vehicle Slowdown, if equipped, OnStar can work with law enforcement to gradually slow the vehicle down.

Navigation

OnStar navigation requires a specific OnStar subscription plan.

Press On to receive Turn-by-Turn directions or have them sent to the vehicle’s navigation screen, if equipped.

Turn-by-Turn Navigation

1. Press On to connect to an Advisor.

2. Request directions to be downloaded to the vehicle.
3. Follow the voice-guided commands.

Using Voice Commands During a Planned Route

Cancel Route

1. Press . System responds: “OnStar ready,” then a tone.
2. Say “Cancel route.” System responds: “Do you want to cancel directions?”
3. Say “Yes.” System responds: “OK, request completed, thank you, goodbye.”

Route Preview

1. Press . System responds: “OnStar ready,” then a tone.
2. Say “Route preview.” System responds with the next three maneuvers.

Repeat

1. Press . System responds: “OnStar ready,” then a tone.
2. Say “Repeat.” System responds with the last direction given, then responds with “OnStar ready,” then a tone.

Get My Destination

1. Press . System responds: “OnStar ready,” then a tone.
2. Say “Get my destination.” System responds with the address and distance to the destination, then responds with “OnStar ready,” then a tone.

Destination Download

Subscribers can have directions sent to the vehicle’s navigation screen, if equipped.

Press , then ask the Advisor to download directions to the vehicle’s navigation system, if equipped. After the call ends, the navigation screen will provide prompts to begin driving directions. Routes that are sent to the navigation screen can only be canceled through the navigation system.

See www.onstar.com (U.S.) or www.onstar.ca (Canada).

Connections

The following OnStar services help with staying connected.

For coverage maps, see www.onstar.com (U.S.) or www.onstar.ca (Canada).

Ensuring Security

- Change the default passwords for the Wi-Fi hotspot and RemoteLink mobile application. Make these passwords different from each other and use a combination of letters, numbers, and symbols to increase the security.
- Change the default name of the SSID (Service Set Indentifier). This is your network’s name that is visible to other wireless devices. Choose a unique name and avoid family names or vehicle descriptions.

OnStar Wi-Fi® Hotspot (If Equipped)

The vehicle may have a built-in Wi-Fi hotspot that provides access to the Internet and web content at

4G LTE speed. Up to seven mobile devices can be connected. A data plan is required. Use the in-vehicle controls only when it is safe to do so.

1. To retrieve Wi-Fi hotspot information, press , wait for the prompt, then say “Wi-Fi settings.” On some vehicles, touch Wi-Fi Settings on the screen.
2. The Wi-Fi settings will display the Wi-Fi hotspot name (SSID), password, and on some vehicles, the connection type (no Internet connection, 3G, 4G, 4G LTE), and signal quality (poor, good, excellent).
3. To change the SSID or password, press or call 1-888-4ONSTAR to connect with an Advisor.

OnStar RemoteLink® Mobile App (If Equipped)

Download the OnStar RemoteLink mobile app to select Apple® iOS, Android™, BlackBerry®, or Windows® mobile devices.

OnStar Subscribers can access the following services from a mobile device:

- Remotely start/stop the vehicle, if factory-equipped.
- Lock/unlock doors, if equipped with automatic locks.
- Activate the horn and lamps.
- Check the vehicle’s fuel level, oil life, or tire pressure, if factory-equipped with the Tire Pressure Monitor System.
- Send directions to the vehicle.
- Locate the vehicle on a map (U.S. market only).
- Turn the vehicle's Wi-Fi hotspot on/off, manage settings, and monitor data consumption, if equipped.

For OnStar RemoteLink information and compatibility, see www.onstar.com (U.S.) or www.onstar.ca (Canada).

Remote Services

Contact an OnStar Advisor to unlock the doors or sound the horn and flash the lamps.

OnStar AtYourService

OnStar Advisors can provide special offers from restaurants and retailers on your route, help locate hotels, or book a room.

OnStar Hands-Free Calling

Make and receive calls with the built-in wireless calling service, which requires available minutes.

Make a Call

1. Press . System responds: “OnStar ready.”
2. Say “Call.” System responds: “Call. Please say the name or number to call.”
3. Say the entire number without pausing, including a “1” and the area code. System responds: “OK, calling.”

Calling 911 Emergency

1. Press . System responds: “OnStar ready.”
2. Say “Call.” System responds: “Call. Please say the name or number to call.”
3. Say “911” without pausing. System responds: “911.”
4. Say “Call.” System responds: “OK, dialing 911.”

Retrieve My Number

1. Press . System responds: “OnStar ready.”
2. Say “My number.” System responds: “Your OnStar Hands-Free Calling number is,” then says the number.

End a Call

Press . System responds: “Call ended.”

Verify Minutes and Expiration

Press and say “Minutes” then “Verify” to check how many minutes remain and their expiration date.

Diagnostics

Advanced Diagnostics provides a status of the vehicle’s key systems with a monthly e-mail, or by pressing . The Proactive Alerts feature (if available) can help predict and alert of potential upcoming maintenance issues with select components on the vehicle, before they become a problem.

OnStar can also monitor and report tire pressure, if the vehicle is equipped with a Tire Pressure Monitoring System.

OnStar Additional Information

In-Vehicle Audio Messages

Audio messages may play important information at the following times:

- Prior to vehicle purchase.
  Press to set up an account.
- With the OnStar Basic Plan, every 60 days.
- After change in ownership and at 90 days.

Transferring Service

Press to request account transfer eligibility information. The Advisor can cancel or change account information.

Selling/Transferring the Vehicle

Call 1-888-4ONSTAR (1-888-466-7827) immediately to terminate your OnStar services if the vehicle is disposed of, sold, transferred, or if the lease ends.

Reactivation for Subsequent Owners

Press On and follow the prompts to speak to an Advisor as soon as possible. The Advisor will update vehicle records and explain OnStar service options.

How OnStar Service Works

Automatic Crash Response, Emergency Services, Crisis Assist, Stolen Vehicle Assistance, Advanced Diagnostics, Remote Services, Roadside Assistance, Turn-by-Turn Navigation, and Hands-Free Calling are available on most vehicles. Not all OnStar services are available everywhere or on all vehicles. For more information, a full description of OnStar services, system limitations, and OnStar terms and conditions:

- Call 1-888-4ONSTAR (1-888-466-7827).
- See www.onstar.com (U.S.).
- See www.onstar.ca (Canada).
- Call TTY 1-877-248-2080.
- Press On to speak with an Advisor.

OnStar services cannot work unless the vehicle is in a place where OnStar has an agreement with a wireless service provider for service in that area. The wireless service provider must also have coverage, network capacity, reception, and technology compatible with OnStar services. Service involving location information about the vehicle cannot work unless GPS signals are available, unobstructed, and compatible with the OnStar hardware. OnStar services may not work if the OnStar equipment is not properly installed or it has not been properly maintained. If equipment or software is added, connected, or modified, OnStar services may not work. Other problems beyond the control of OnStar — such as hills, tall buildings, tunnels, weather, electrical system design and architecture of the vehicle, damage to the vehicle in a crash, or wireless phone network congestion or jamming — may prevent service.

See *Radio Frequency Statement* ⇨ *371*.

Services for People with Disabilities

Advisors provide services to help Subscribers with physical disabilities and medical conditions.

Press On to help:

- Locate a gas station with an attendant to pump gas.
- Find a hotel, restaurant, etc., that meets accessibility needs.
- Provide directions to the closest hospital or pharmacy in urgent situations.

TTY Users

OnStar has the ability to communicate to deaf, hard-of-hearing, or speech-impaired customers while in the vehicle. The available dealer-installed TTY system can provide in-vehicle access to all OnStar services, except Virtual Advisor and OnStar Turn-by-Turn Navigation.

OnStar Personal Identification Number (PIN)

A PIN is needed to access some OnStar services. The PIN will need to be changed the first time when speaking with an Advisor. To change the OnStar PIN, contact an OnStar Advisor by pressing On or calling 1-888-4ONSTAR.

Warranty

OnStar equipment may be warranted as part of the vehicle warranty.

Languages

The vehicle can be programmed to respond in multiple languages. Press On and ask for an Advisor. Advisors are available in English, Spanish, and French. Available languages may vary by country.

Potential Issues

OnStar cannot perform Remote Door Unlock or Stolen Vehicle Assistance after the vehicle has been off continuously for five days without an ignition cycle. If the vehicle has not been started for five days, OnStar can contact Roadside Assistance or a locksmith to help gain access to the vehicle.

Global Positioning System (GPS)

- Obstruction of the GPS can occur in a large city with tall buildings; in parking garages; around airports; in tunnels and underpasses; or in an area with very dense trees. If GPS signals are not available, the OnStar system should still operate to call OnStar. However, OnStar could have difficulty identifying the exact location.
- In emergency situations, OnStar can use the last stored GPS location to send to emergency responders.

A temporary loss of GPS can cause loss of the ability to send a Turn-by-Turn Navigation route. The Advisor may give a verbal route or may ask for a call back after the vehicle is driven into an open area.

Cellular and GPS Antennas

Cellular reception is required for OnStar to send remote signals to the vehicle. Do not place items over or near the antenna to prevent blocking cellular and GPS signal reception.

Unable to Connect to OnStar Message

If there is limited cellular coverage or the cellular network has reached maximum capacity, this message may come on. Press On to try the call again or try again after driving a few miles into another cellular area.

Vehicle and Power Issues

OnStar services require a vehicle electrical system, wireless service, and GPS satellite technologies to be available and operating for features to function properly. These systems may not operate if the battery is discharged or disconnected.

Add-on Electrical Equipment

The OnStar system is integrated into the electrical architecture of the vehicle. Do not add any electrical equipment. See *Add-On Electrical Equipment* ⇨ *260*. Added electrical equipment may interfere with the operation of the OnStar system and cause it to not operate.

Vehicle Software Updates

OnStar or GM may remotely deliver software updates or changes to the vehicle without further notice or consent. These updates or changes may enhance or maintain safety, security, or the operation of the vehicle or the vehicle systems. Software updates or changes may affect or erase data or settings that are stored in the vehicle, such as OnStar Hands-Free Calling name tags, saved navigation destinations, or pre-set radio stations. Neither OnStar nor GM is responsible for any affected or erased data or settings. These updates or changes may also collect personal information. Such collection is described in the OnStar privacy statement or separately disclosed at the time of installation. These updates or changes may also cause a system to automatically communicate with GM servers to collect information about vehicle system status, identify whether updates or changes are available, or deliver updates or changes. An active OnStar agreement constitutes consent to these software updates or changes and agreement that either OnStar or GM may remotely deliver them to the vehicle.

Privacy

The complete OnStar Privacy Statement may be found at www.onstar.com (U.S.), or www.onstar.ca (Canada). We recommend that you review it. If you have any questions, call 1-888-4ONSTAR (1-888-466-7827) or press On to speak with an Advisor. Users of wireless communications are cautioned that the privacy of any information sent via wireless cellular communications cannot be assured. Third parties may unlawfully intercept or access transmissions and private communications without consent.

OnStar - Software Acknowledgements

Certain OnStar components include libcurl and unzip software and other third party software. Below are the notices and licenses associated with libcurl and unzip and for other third party software please see http://www.lg.com/global/support/opensource/index and https://www.onstar.com/us/en/support/getdocuments.html

libcurl:

COPYRIGHT AND PERMISSION NOTICE

Copyright (c) 1996 - 2010, Daniel Stenberg, <daniel@haxx.se>.

All rights reserved.

Permission to use, copy, modify, and distribute this software for any purpose with or without fee is hereby granted, provided that the

above copyright notice and this permission notice appear in all copies.

THE SOFTWARE IS PROVIDED "AS IS," WITHOUT WARRANTY OF ANY KIND, EXPRESS OR IMPLIED, INCLUDING BUT NOT LIMITED TO THE WARRANTIES OF MERCHANTABILITY, FITNESS FOR A PARTICULAR PURPOSE AND NONINFRINGEMENT OF THIRD PARTY RIGHTS. IN NO EVENT SHALL THE AUTHORS OR COPYRIGHT HOLDERS BE LIABLE FOR ANY CLAIM, DAMAGES OR OTHER LIABILITY, WHETHER IN AN ACTION OF CONTRACT, TORT OR OTHERWISE, ARISING FROM, OUT OF OR IN CONNECTION WITH THE SOFTWARE OR THE USE OR OTHER DEALINGS IN THE SOFTWARE.

Except as contained in this notice, the name of a copyright holder shall not be used in advertising or otherwise to promote the sale, use or other dealings in this Software without prior written authorization of the copyright holder.

unzip:

This is version 2005-Feb-10 of the Info-ZIP copyright and license. The definitive version of this document should be available at ftp://ftp.info-zip.org/pub/infozip/license.html indefinitely.

Copyright (c) 1990-2005 Info-ZIP. All rights reserved.

For the purposes of this copyright and license, "Info-ZIP" is defined as the following set of individuals:

Mark Adler, John Bush, Karl Davis, Harald Denker, Jean-Michel Dubois, Jean-loup Gailly, Hunter Goatley, Ed Gordon, Ian Gorman, Chris Herborth, Dirk Haase, Greg Hartwig, Robert Heath, Jonathan Hudson, Paul Kienitz, David Kirschbaum, Johnny Lee, Onno van der Linden, Igor Mandrichenko, Steve P. Miller, Sergio Monesi, Keith Owens, George Petrov, Greg Roelofs, Kai Uwe Rommel, Steve Salisbury, Dave Smith, Steven M. Schweda, Christian Spieler, Cosmin Truta, Antoine Verheijen, Paul von Behren, Rich Wales, Mike White.

This software is provided "as is," without warranty of any kind, express or implied. In no event shall Info-ZIP or its contributors be held liable for any direct, indirect, incidental, special or consequential damages arising out of the use of or inability to use this software.

Permission is granted to anyone to use this software for any purpose, including commercial applications, and to alter it and redistribute it freely, subject to the following restrictions:

1. Redistributions of source code must retain the above copyright notice, definition, disclaimer, and this list of conditions.
2. Redistributions in binary form (compiled executables) must reproduce the above copyright notice, definition, disclaimer, and this list of conditions in documentation and/or other materials provided with the distribution. The sole exception to this condition is redistribution of a standard UnZipSFX binary (including SFXWiz) as part of a

self-extracting archive; that is permitted without inclusion of this license, as long as the normal SFX banner has not been removed from the binary or disabled.

3. Altered versions–including, but not limited to, ports to new operating systems, existing ports with new graphical interfaces, and dynamic, shared, or static library versions–must be plainly marked as such and must not be misrepresented as being the original source. Such altered versions also must not be misrepresented as being Info-ZIP releases–including, but not limited to, labeling of the altered versions with the names “Info-ZIP” (or any variation thereof, including, but not limited to, different capitalizations), “Pocket UnZip,” “WiZ” or “MacZip” without the explicit permission of Info-ZIP. Such altered versions are further prohibited from misrepresentative use of the Zip-Bugs or Info-ZIP e-mail addresses or of the Info-ZIP URL(s).

4. Info-ZIP retains the right to use the names “Info-ZIP,” “Zip,” “UnZip,” “UnZipSFX,” “WiZ,” “Pocket UnZip,” “Pocket Zip,” and “MacZip” for its own source and binary releases.

Index

A

Accessories and Modifications 262
Accessory Power 206
Adaptive Cruise Control 223
Add-On Electrical Equipment . . . 260
Additional Information
  OnStar® 379
Additional Maintenance and Care 350
Adjustments
  Lumbar, Front Seats 60
  Lumbar, Rear Seats 68
  Thigh Support 61
Air Cleaner/Filter, Engine 273
Air Conditioning 178, 185
Air Filter, Passenger Compartment 190
Air Vents 189
Airbag System
  Check 87
  How Does an Airbag Restrain? 80
  Passenger Sensing System 82
  What Makes an Airbag Inflate? 80
  What Will You See after an Airbag Inflates? 81
Airbag System (cont'd)
  When Should an Airbag Inflate? 79
  Where Are the Airbags? 78
Airbags
  Adding Equipment to the Vehicle 86
  Passenger Status Indicator . . . 130
  Readiness Light 130
  Servicing Airbag-Equipped Vehicles 86
  System Check 76
Alarm
  Vehicle Security 44
Alert
  Lane Change 246
  Side Blind Zone (SBZA) 246
All-Season Tires 300
All-Wheel Drive 213, 284
Antilock Brake System (ABS) . . . 214
  Warning Light 135
Appearance Care
  Exterior 333
  Interior 338
Armrest
  Rear Seat 68
Armrest Storage 107

Assistance Systems for Driving 237
Assistance Systems for Parking and Backing 231
Auto Stop Mode 139
Automatic
Climate Control System 178, 185
Door Locks 39
Headlamp System 172
Transmission 210
Transmission Fluid 273
Automatic Transmission
Manual Mode 212
Shift Lock Control Function Check 285
Automatic Vehicle Hold (AVH) 217

B

Battery
Exterior Lighting Battery Saver 176
Power Protection 176
Voltage and Charging Messages 147
Battery - North America 284, 327
Blade Replacement, Wiper 286
Boost Gauge 125
Brake
Parking, Electric 214
System Warning Light 133
Brakes 282
Antilock 214
Assist 216
Fluid 283
System Messages 147
Braking 193
Braking System
Front Pedestrian (FPB) 241
Break-In, New Vehicle 202
Bulb Replacement 289
Headlamp Aiming 287
Headlamps 288
License Plate Lamps 288
Buying New Tires 315

C

Cadillac Premium Care Maintenance 344
Calibration 113
California
Fuel Requirements 253
Perchlorate Materials Requirements 262
California Proposition 65 Warning 262, 284, 327
Canadian Vehicle Owners 2
Capacities and Specifications 358
Carbon Monoxide
Engine Exhaust 209
Trunk 41
Winter Driving 197
Cargo
Tie-Downs 108
Caution, Danger, and Warning 2
Center Console Storage 107
Chains, Tire 319
Charging
Wireless 115
Charging System Light 131
Check
Malfunction Indicator Engine Light 132
Child Restraints
Infants and Young Children 90
Lower Anchors and Tethers for Children 95
Older Children 88
Securing 101, 103
Systems 92
Circuit Breakers 290
Cleaning
Exterior Care 333

Cleaning (cont'd)
Interior Care 338
Climate Control Systems
Automatic 178, 185
Clock 113
Cluster, Instrument 118, 121
Collision Damage Repair 368
Compact Spare Tire 326
Compartments
Storage 106
Compass 113
Messages 148
Connections
OnStar® 377
Control
Traction and Electronic
Stability 217
Control of a Vehicle 193
Convenience Net 108
Convex Mirrors 48
Coolant
Engine 277
Engine Temperature Gauge . . 128
Engine Temperature
Warning Light 137
Cooling System 275
Engine Messages 149
Courtesy Lamps 174
Courtesy Transportation
Program 367
Cruise Control 220
Light 140
Messages 148
Cruise Control, Adaptive 223
Customer Assistance 364
Offices 363
Text Telephone (TTY)
Users 364
Customer Information
Service Publications
Ordering Information 370
Customer Satisfaction
Procedure 361

D

Damage Repair, Collision 368
Danger, Warning, and Caution 2
Data Recorders, Event 373
Daytime Running
Lamps (DRL) 172
Defensive Driving 193
Delayed Locking 39
Diagnostics
OnStar® 379
Distracted Driving 192
Dome Lamps 174
Door
Ajar Light 140
Ajar Messages 148
Delayed Locking 39
Locks 37
Power Locks 39
Rear Seat Pass-Through 69
Drive Belt Routing, Engine 360
Drive Systems
All-Wheel Drive 213, 284
Driver Assistance Systems 230
Driver Information
Center (DIC) 140
Driver Mode Control 219
Driving
Assistance Systems 237
Characteristics and
Towing Tips 255
Defensive 193
Drunk 193
For Better Fuel Economy 27
Hill and Mountain Roads 196
If the Vehicle is Stuck 198
Loss of Control 195
Off-Road Recovery 194
Vehicle Load Limits 198
Wet Roads 195
Winter 197

E

Electric Parking Brake 214
Electric Parking Brake Light 134
Electrical Equipment,
  Add-On 260
Electrical System
  Engine Compartment Fuse
    Block 290
  Fuses and Circuit Breakers ... 290
  Instrument Panel Fuse
    Block 293
  Overload 289
  Rear Compartment Fuse
    Block 295
Emergency
  OnStar® 376
Engine
  Air Cleaner/Filter 273
  Check and Service Engine
    Soon Light 132
  Compartment Overview 265
  Coolant 277
  Coolant Heater 206
  Coolant Temperature
    Gauge 128
Engine (cont'd)
  Coolant Temperature
    Warning Light 137
  Cooling System 275
  Cooling System Messages ... 149
  Drive Belt Routing 360
  Exhaust 209
  Oil Life System 272
  Oil Messages 149
  Oil Pressure Gauge 126
  Oil Pressure Light 138
  Overheating 280
  Power Messages 150
  Running While Parked 210
  Starting 204
Engine Oil
  Temperature Gauge 127
Entry Lighting 175
Equipment, Towing 259
Event Data Recorders 373
Exit Lighting 176
Extender, Safety Belt 75
Exterior Lamp Controls 170
Exterior Lamps Off Reminder ... 172
Exterior Lighting Battery
  Saver 176

F

Features
  Memory 12
Filter,
  Engine Air Cleaner 273
Flash-to-Pass 172
Flashers, Hazard Warning 173
Flat Tire 320
  Changing 321
Floor Mats 341
Fluid
  Automatic Transmission 273
  Brakes 283
  Washer 281
Forward Collision Alert
  (FCA) System 237
Frequency Statement
  Radio 371
Front Automatic Braking
  (FAB) System 240
Front Pedestrian Braking
  (FPB) System 241
Front Seats
  Heated and Ventilated 64
Fuel 251
  Additives 253
  Economy Driving 27

Fuel (cont'd)
Filling a Portable Fuel Container 255
Filling the Tank 253
Foreign Countries 253
Gauge 124
Low Fuel Warning Light 138
Requirements, California 253
System Messages 150
Fuses
Engine Compartment Fuse Block 290
Fuses and Circuit Breakers ... 290
Instrument Panel Fuse Block 293
Rear Compartment Fuse Block 295

G

Garage Door Opener 166
Programming 166
Gauges
Boost 125
Engine Coolant Temperature 128
Engine Oil Pressure 126
Engine Oil Temperature 127
Fuel 124
Odometer 124
Gauges (cont'd)
Speedometer 123
Tachometer 124
Trip Odometer 124
Voltmeter 129
Warning Lights and Indicators 117
General Information
Service and Maintenance 342
Towing 255
Vehicle Care 262
Glove Box 106

H

Hazard Warning Flashers 173
Head Restraints 58
Head-up Display 143
Headlamps
Aiming 287
Automatic 172
Bulb Replacement 288
Daytime Running Lamps (DRL) 172
Flash-to-Pass 172
High-Beam On Light 139
High/Low Beam Changer 172
Lamps On Reminder 139
Heated
Steering Wheel 111
Heated and Ventilated Front Seats 64
Heated and Ventilated Rear Seats 69
Heated Mirrors 49
Heater
Engine Coolant 206
Heating and Air Conditioning 178, 185
High-Beam On Light 139
High-Speed Operation 308
Hill and Mountain Roads 196
Hill Start Assist (HSA) 216
Hood 264
Horn 111
How to Wear Safety Belts Properly 71

I

Ignition Positions 202
Immobilizer 46
Indicator
Pedestrian Ahead 136
Vehicle Ahead 136
Infants and Young Children, Restraints 90
Infotainment 177
Infotainment System 374
Instrument Cluster 118, 121

Instrument Panel
Storage Area 106
Instrument Panel Overview 6
Interior Rearview Mirrors 49
Introduction 2

J

Jump Starting - North America 327

K

Key and Lock Messages 150
Keyless Entry
Remote (RKE) System 29
Keys 28

L

Labeling, Tire Sidewall 301
Lamps
Courtesy 174
Daytime Running (DRL) 172
Dome 174
Exterior Controls 170
Exterior Lamps Off Reminder 172
Exterior Lighting Battery Saver 176
License Plate 288
Malfunction Indicator 132
Messages 151
Lamps (cont'd)
On Reminder 139
Reading 175
Lane Change Alert (LCA) 246
Lane Departure Warning (LDW) 248
Lane Keep Assist (LKA) 248
Lane Keep Assist Light 135
Lap-Shoulder Belt 72
LATCH System
Replacing Parts after a Crash 100
LATCH, Lower Anchors and Tethers for Children 95
LED Lighting 288
Light, Auto Stop Mode 139
Lighting
Entry 175
Exit 176
Illumination Control 174
LED 288
Lights 135
Airbag Readiness 130
Antilock Brake System (ABS) Warning 135
Brake System Warning 133
Charging System 131
Cruise Control 140
Lights (cont'd)
Door Ajar 140
Electric Parking Brake 134
Engine Coolant Temperature Warning 137
Engine Oil Pressure 138
Flash-to-Pass 172
High-Beam On 139
High/Low Beam Changer 172
Low Fuel Warning 138
Safety Belt Reminders 129
Security 139
Service Electric Parking Brake 134
StabiliTrak® OFF 136
Tire Pressure 137
Traction Control System (TCS)/StabiliTrak® 137
Traction Off 136
Locks
Automatic Door 39
Delayed Locking 39
Door 37
Lockout Protection 39
Power Door 39
Safety 40
Loss of Control 195
Low Fuel Warning Light 138

Low-Profile Tires 300
Lower Anchors and Tethers
for Children (LATCH
System) 95
Lumbar Adjustment 60, 68
Front Seats 60
Rear Seats 68

M

Maintenance
Records 356
Maintenance and Care
Additional 350
Maintenance Schedule 344
Recommended Fluids and
Lubricants 353
Malfunction Indicator Lamp 132
Manual Mode 212
Massage 66
Memory Features 12
Memory Seats 63
Messages
Airbag System 154
Battery Voltage and
Charging 147
Brake System 147
Compass 148
Door Ajar 148
Engine Cooling System 149
Messages (cont'd)
Engine Oil 149
Engine Power 150
Fuel System 150
Key and Lock 150
Lamp 151
Object Detection System 151
Ride Control System 154
Safety Belt 154
Security 155
Service Vehicle 155
Starting the Vehicle 156
Steering System 155
Tire 156
Transmission 156
Vehicle 146
Vehicle Reminder 157
Vehicle Speed 157
Washer Fluid 157
Window 157
Mirror
Rear Camera 50
Mirrors
Automatic Dimming
Rearview 49
Convex 48
Heated 49
Power 48
Mirrors (cont'd)
Tilt in Reverse 49
Mirrors, Interior Rearview 49
Mode 219
Driver Control 219
Monitor System, Tire
Pressure 308

N

Navigation
OnStar® 376
Net, Convenience 108
New Vehicle Break-In 202
Night Vision System 243

O

Object Detection System
Messages 151
Odometer 124
Trip 124
Off-Road
Recovery 194
Oil
Engine 270
Engine Oil Life System 272
Engine Oil Pressure Gauge . . . 126
Messages 149
Pressure Light 138
Older Children, Restraints 88

Online Owner Center 364
OnStar 373
OnStar® Additional
Information 379
OnStar® Connections 377
OnStar® Diagnostics 379
OnStar® Emergency 376
OnStar® Navigation 376
OnStar® Overview 375
OnStar® Security 376
Ordering
Service Publications 370
Outlets
Power 114
Overheating, Engine 280

P

Park
Shifting Into 207
Shifting Out of 208
Parking
Brake and P (Park)
Mechanism Check 286
Over Things That Burn 209
Parking or Backing
Assistance Systems 231
Passenger Airbag Status
Indicator 130
Passenger Compartment Air
Filter 190
Passenger Sensing System 82
Pedestrian Ahead Indicator 136
Perchlorate Materials
Requirements, California 262
Personalization
Vehicle 157
Power
Door Locks 39
Mirrors 48
Outlets 114
Protection, Battery 176
Retained Accessory (RAP) . . . 206
Seat Adjustment 60
Windows 52
Pregnancy, Using Safety Belts . . . 74
Premium Care Maintenance
Cadillac 344
Privacy
Vehicle Data Recording 372
Program
Courtesy Transportation 367
Proposition
65 Warning,
California 262, 284, 327

R

Radio Frequency Statement 371
Reading Lamps 175
Rear Camera Mirror 50
Rear Seat Armrest 68
Rear Seat Pass-Through Door . . . 69
Rear Seats 66
Heated and Ventilated 69
Rear Storage 107
Rear Window Sunshade 54
Rearview Mirrors
Automatic Dimming 49
Reclining Seatbacks 62
Recommended Fluids and
Lubricants 353
Recorder
Video 250
Records
Maintenance 356
Recreational Vehicle Towing 331
Remote Keyless Entry (RKE)
System 29
Remote Vehicle Start 36
Replacement Bulbs 289
Replacement Parts
Airbags 87
Maintenance 354
Replacing Airbag System 87

Replacing LATCH System Parts after a Crash 100
Replacing Safety Belt System Parts after a Crash 75
Reporting Safety Defects
Canadian Government 372
General Motors 372
U.S. Government 371
Restraints
Where to Put 94
Retained Accessory Power (RAP) 206
Reverse Tilt Mirrors 49
Ride Control Systems
Messages 154
Roads
Driving, Wet 195
Roadside Service 364
Roof
Sunroof 55
Rotation, Tires 313
Routing, Engine Drive Belt 360
Running the Vehicle While Parked 210

S

Safety Belts 70
Care 75
Extender 75
How to Wear Safety Belts Properly 71
Lap-Shoulder Belt 72
Messages 154
Reminders 129
Replacing after a Crash 75
Use During Pregnancy 74
Safety Defects Reporting
Canadian Government 372
General Motors 372
U.S. Government 371
Safety Locks 40
Safety System Check 75
Scheduling Appointments 367
Seats
Head Restraints 58
Heated and Ventilated Front 64
Heated and Ventilated, Rear 69
Lumbar Adjustment, Front 60
Lumbar Adjustment, Rear 68
Memory 63
Power Adjustment, Front 60
Rear 66
Reclining Seatbacks 62
Securing Child Restraints 101, 103
Security
Light 139
Messages 155
OnStar® 376
Vehicle 44
Vehicle Alarm 44
Service 190
Accessories and Modifications 262
Doing Your Own Work 263
Engine Soon Light 132
Maintenance Records 356
Maintenance, General Information 342
Parts Identification Label 357
Publications Ordering Information 370
Scheduling Appointments 367
Vehicle Messages 155
Service Electric Parking Brake Light 134
Services
Special Application 349
Servicing the Airbag 86

Shift Lock Control Function Check, Automatic Transmission 285
Shifting
Into Park 207
Out of Park 208
Side Blind Zone Alert (SBZA) . . . 246
Signals, Turn and Lane-Change 173
Spare Tire
Compact 326
Special Application Services 349
Specifications and Capacities 358
Speedometer 123
StabiliTrak
OFF Light 136
Start Assist, Hills 216
Start Vehicle, Remote 36
Starter Switch Check 285
Starting the Engine 204
Starting the Vehicle
Messages 156
Steering 194
Heated Wheel 111
Wheel Adjustment 110
Wheel Controls 111
Steering System Messages 155
Storage
Rear 107
Storage Areas
Armrest 107
Center Console 107
Convenience Net 108
Glove Box 106
Instrument Panel 106
Storage Compartments 106
Stuck Vehicle 198
Summer Tires 301
Sun Visors 54
Sunroof 55
Sunshade
Rear Window 54
Symbols 3
System
Forward Collision Alert (FCA) 237
Infotainment 177, 374
Night Vision 243
Systems
Driver Assistance 230

T

Tachometer 124
Text Telephone (TTY) Users 364
Theft-Deterrent Systems 46
Theft-Deterrent Systems (cont'd)
Immobilizer 46
Thigh Support Adjustment 61
Time 113
Tires 299
All-Season 300
Buying New Tires 315
Chains 319
Changing 321
Compact Spare 326
Designations 303
Different Size 316
If a Tire Goes Flat 320
Inspection 312
Low Profile 300
Messages 156
Pressure 308
Pressure Light 137
Pressure Monitor Operation . . 309
Pressure Monitor System 308
Rotation 313
Sidewall Labeling 301
Terminology and Definitions . . 304
Uniform Tire Quality Grading 316
Wheel Alignment and Tire Balance 318
Wheel Replacement 318

Tires (cont'd)
When It Is Time for New Tires 314
Winter 300
Towing
Driving Characteristics 255
Equipment 259
General Information 255
Recreational Vehicle 331
Trailer 258
Vehicle 330
Traction
Control System (TCS)/ StabiliTrak® Light 137
Off Light 136
Traction Control/Electronic Stability Control 217
Trailer
Towing 258
Transmission
Automatic 210
Fluid, Automatic 273
Messages 156
Transportation Program, Courtesy 367
Trip Odometer 124
Trunk 41
Turn and Lane-Change Signals 173

U

Uniform Tire Quality Grading ... 316
Universal Remote System 166
Operation 168
Programming 166
Using This Manual 2

V

Vehicle
Alarm System 44
Canadian Owners 2
Control 193
Identification Number (VIN) ... 357
Load Limits 198
Messages 146
Personalization 157
Reminder Messages 157
Remote Start 36
Security 44
Speed Messages 157
Towing 330
Vehicle Ahead Indicator 136
Vehicle Care
Tire Pressure 306
Vehicle Data Recording and Privacy 372
Vehicle Hold
Automatic 217
Ventilation, Air 189
Video Recorder 250
Visors 54
Voltmeter Gauge 129

W

Warning
Brake System Light 133
Caution and Danger 2
Lane Departure (LDW) 248
Warning Lights, Gauges, and Indicators 117
Warnings
Hazard Flashers 173
Washer Fluid 281
Messages 157
Wheels
Alignment and Tire Balance .. 318
Different Size 316
Replacement 318
When It Is Time for New Tires 314
Where to Put the Restraint 94
Windows 51
Messages 157
Power 52

Windshield
Replacement 287
Wiper/Washer 111
Winter
Driving 197
Winter Tires 300
Wiper Blade Replacement 286
Wireless Charging 115