2005 RSX Online Reference Owner's Manual

Use these links (and links throughout this manual) to navigate through this reference.
For a printed owner's manual, click on authorized manuals or go to www.helminc.com.

Contents

Owner's Identification Form

Introduction i

A Few Words About Safety ii

Your Vehicle at a Glance 4

Driver and Passenger Safety 7
Proper use and care of your vehicle's seat belts, and Supplemental Restraint System.

Instruments and Controls 49
Instrument panel indicator and gauge, and how to use dashboard and steering column controls.

Features 87
How to operate the climate control system, the audio system, and other convenience features.

Before Driving 119
What gasoline to use, how to break-in your new vehicle, and how to load luggage and other cargo.

Driving 133
The proper way to start the engine, shift the transmission, and park, plus towing a trailer.

Maintenance 153
The Maintenance Schedule shows you when you need to take your vehicle to the dealer.

Taking Care of the Unexpected 191
This section covers several problems motorists sometimes experience, and how to handle them.

Technical Information 215
ID numbers, dimensions, capacities, and technical information.

Warranty and Customer Relations (U.S. and Canada) 227
A summary of the warranties covering your new Acura, and how to contact us.

Authorized Manuals (U.S. only) 231
How to order manuals and other technical literature.

Index I

Service Information Summary
A summary of information you need when you pull up to the fuel pump.

Owner's Identification

OWNER _____

_____

ADDRESS _____
STREET

_____ _____ _____
CITY STATE/PROVINCE ZIP CODE/ POSTAL CODE

V. I. N. _____

DELIVERY DATE _____
(Date sold to original retail purchaser)

DEALER NAME _____ DEALER NO. _____

ADDRESS _____
STREET

_____ _____ _____
CITY STATE/PROVINCE ZIP CODE/ POSTAL CODE

OWNER'S SIGNATURE _____

DEALER'S SIGNATURE _____

This Owner's Manual should be considered a permanent part of the vehicle and should remain with the vehicle when it is sold.

This Owner's Manual covers all models of the Acura RSX. You may find descriptions of equipment and features that are not on your particular model.

The information and specifications included in this publication were in effect at the time of approval for printing. Honda Motor Co., Ltd. reserves the right, however, to discontinue or change specifications or design at any time without notice and without incurring any obligation whatsoever.

POUR CLIENTS CANADIEN
AVIS IMPORTANT: Si vous avez besoin d'un Manuel du Conducteur en français, veuillez demander à votre concessionnaire de commander le numéro de pièce 33S6MC30

Introduction

Congratulations! Your selection of a 2005 Acura RSX was a wise investment. It will give you years of driving pleasure.

One of the best ways to enhance the enjoyment of your new Acura is to read this manual. In it, you will learn how to operate its driving controls and convenience items. Afterwards, keep this owner's manual in your vehicle so you can refer to it at any time.

Several warranties protect your new vehicle. Read the warranty booklet thoroughly so you understand the coverages and are aware of your rights and responsibilities.

Maintaining your vehicle according to the schedules given in this manual helps to keep your driving trouble-free while it preserves your investment. When your vehicle needs maintenance, keep in mind that your Acura dealer's staff is specially trained in servicing the many systems unique to your Acura. Your Acura dealer is dedicated to your satisfaction and will be pleased to answer any questions and concerns.

As you read this manual, you will find information that is preceded by a NOTICE symbol. This information is intended to help you avoid damage to your vehicle, other property, or the environment.

California Proposition 65 Warning

WARNING: This product contains or emits chemicals known to the State of California to cause cancer and birth defects or other reproductive harm.

Event Data Recorders

This vehicle is equipped with one or more recording devices commonly referred to as event data recorders or sensing and diagnostic modules.

A Few Words About Safety

Your safety, and the safety of others, is very important. And operating this vehicle safely is an important responsibility.

To help you make informed decisions about safety, we have provided operating procedures and other information on labels and in this manual. This information alerts you to potential hazards that could hurt you or others.

Of course, it is not practical or possible to warn you about all the hazards associated with operating or maintaining your vehicle. You must use your own good judgement.

You will find this important safety information in a variety of forms, including:

- **Safety Labels** — on the vehicle.
- **Safety Messages** — preceded by a safety alert symbol ⚠ and one of three signal words: **DANGER**, **WARNING**, or **CAUTION**. These signal words mean:

⚠ DANGER	You WILL be KILLED or SERIOUSLY HURT if you don't follow instructions.
⚠ WARNING	You CAN be KILLED or SERIOUSLY HURT if you don't follow instructions.
⚠ CAUTION	You CAN be HURT if you don't follow instructions.

- **Safety Headings** — such as Important Safety Reminders or Important Safety Precautions.
- **Safety Section** — such as Driver and Passenger Safety.
- **Instructions** — how to use this vehicle correctly and safely.

This entire book is filled with important safety information — please read it carefully.

Your Vehicle at a Glance

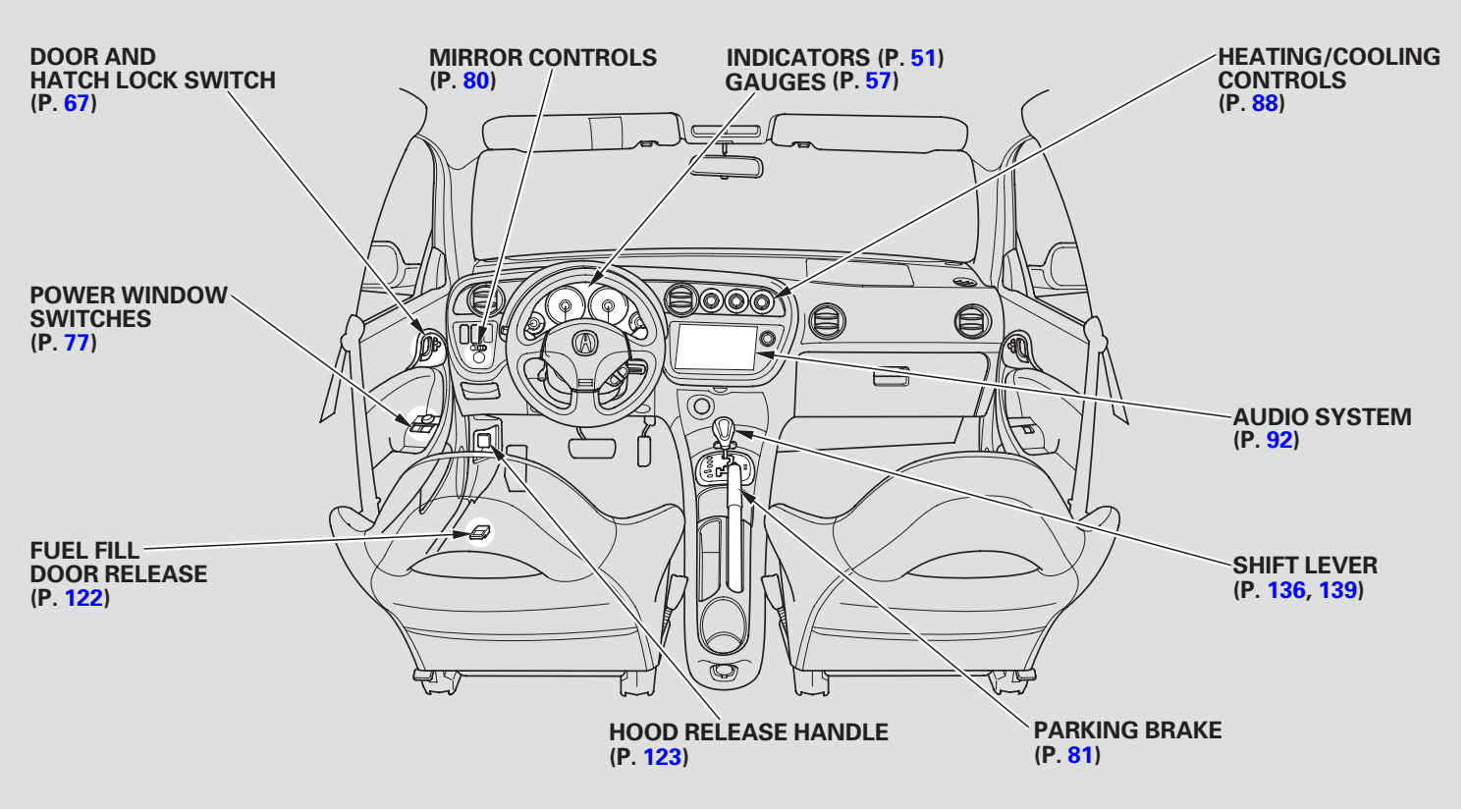

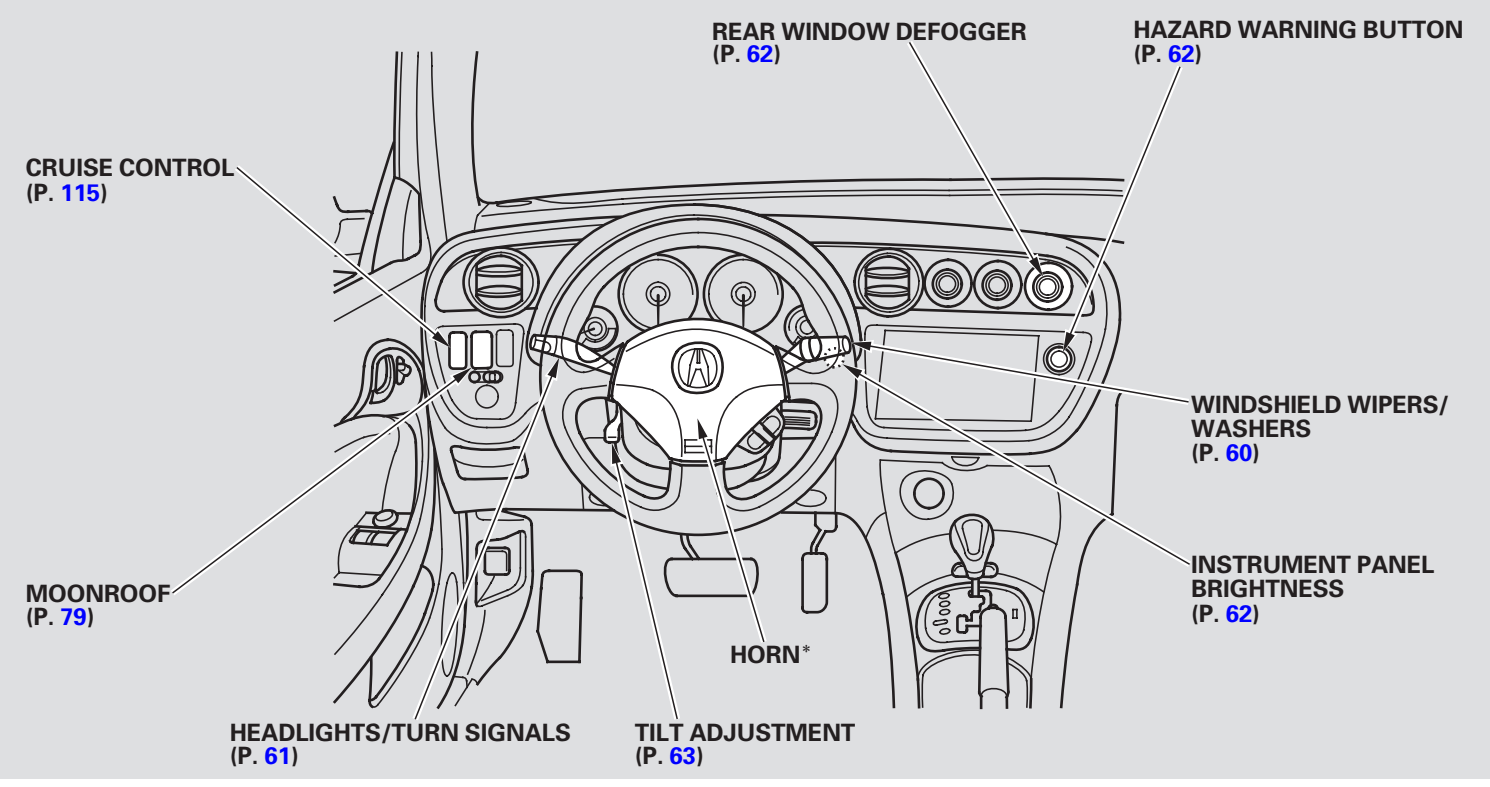

*: To use the horn, press the center pad of the steering wheel.

Driver and Passenger Safety

This section gives you important information about how to protect yourself and your passengers. It shows you how to use seat belts. It explains how your airbags work. And it tells you how to properly restrain infants and children in your vehicle.

Important Safety Precautions 8
Your Vehicle's Safety Features..... 9
Protecting Adults and Teens..... 13
1. Close and Lock the Doors 13
2. Adjust the Front Seats 13
3. Adjust the Seat-Backs 14
4. Fasten and Position the Lap/Shoulder Seat Belts 15
5. Maintain a Proper Sitting Position 16
Advice for Pregnant Women..... 17
Additional Safety Precautions.... 18
Additional Information About Your Seat Belts 19
Seat Belt System Components... 19
Lap/Shoulder Belt..... 19
Automatic Seat Belt Tensioners..... 20
Seat Belt Maintenance 21
Additional Information About Your Airbags 22
Airbag System Components..... 22
How Your Front Airbags Work..... 23
How Your Side Airbags Work.... 25
How the SRS Indicator Works... 26
How the Side Airbag Off Indicator Works..... 27
Airbag Service..... 27
Additional Safety Precautions.... 27
Protecting Children—General Guidelines..... 28
All Children Must Be Restrained 28
All Children Should Sit in a Back Seat..... 29
The Passenger's Front Airbag Poses Serious Risks..... 29
If You Must Drive with Several Children 30
If a Child Requires Close Attention 31
Additional Safety Precautions.... 31
Protecting Infants and Small Children 32
Protecting Infants..... 32
Protecting Small Children 33
Selecting a Child Seat..... 34
Installing a Child Seat 35
Installing a Child Seat With LATCH..... 36
With a Seat Belt 38
With a Tether..... 39
Protecting Larger Children 41
Checking Seat Belt Fit 41
Using a Booster Seat..... 42
When Can a Child Sit in Larger Front..... 43
Additional Safety Precautions.... 44
Carbon Monoxide Hazard 45
Safety Labels..... 46

Important Safety Precautions

You'll find many safety recommendations throughout this section, and throughout this manual. The recommendations on this page are the ones we consider to be the most important.

Always Wear Your Seat Belt
A seat belt is your best protection in all types of collisions. Airbags are designed to supplement seat belts, not replace them. So even though your vehicle is equipped with airbags, make sure you and your passengers always wear your seat belts, and wear them properly (see page 15).

Restrain All Children
Children age 12 and under should ride properly restrained in a back seat, not the front seat. Infants and small children should be restrained in a child seat. Larger children should use a booster seat and a lap/shoulder belt until they can use the belt properly without a booster seat (see page 42).

Be Aware of Airbag Hazards
While airbags can save lives, they can cause serious or fatal injuries to occupants who sit too close to them, or are not properly restrained. Infants, young children, and short adults are at the greatest risk. Be sure to follow all instructions and warnings in this manual (see page 13).

Don't Drink and Drive
Alcohol and driving don't mix. Even one drink can reduce your ability to respond to changing conditions, and your reaction time gets worse with every additional drink. So don't drink and drive, and don't let your friends drink and drive, either.

Control Your Speed
Excessive speed is a major factor in crash injuries and deaths. Generally, the higher the speed, the greater the risk, but serious injuries can also occur at lower speeds. Never drive faster than is safe for current conditions, regardless of the maximum speed posted.

Keep Your Vehicle in Safe Condition
Having a tire blowout or a mechanical failure can be extremely hazardous. To reduce the possibility of such problems, check your tire pressures and condition frequently, and perform all regularly scheduled maintenance (see page 157).

Your Vehicle's Safety Features

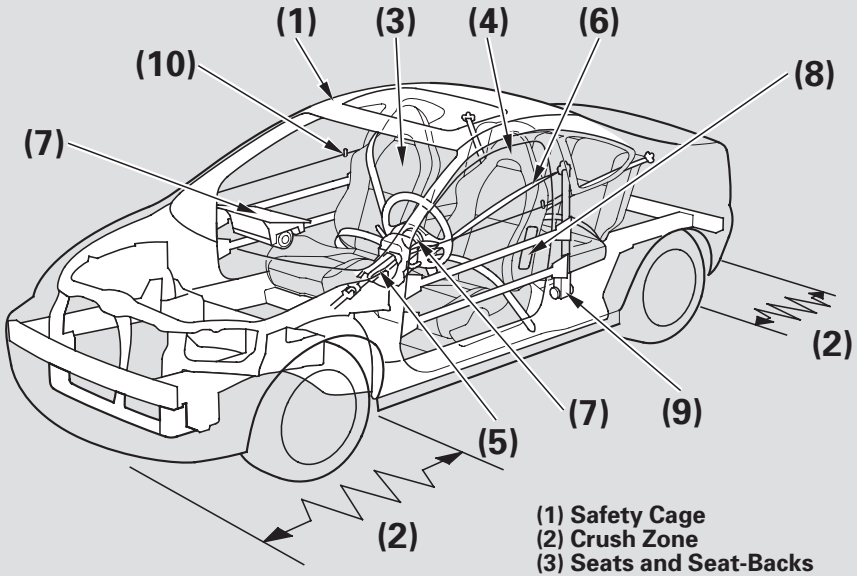

(1) Safety Cage
(2) Crush Zone
(3) Seats and Seat-Backs
(4) Head Restraints
(5) Collapsible Steering Column
(6) Seat Belts
(7) Front Airbags
(8) Side Airbags
(9) Seat Belt Tensioners
(10) Door Locks

Your vehicle is equipped with many features that work together to protect you and your passengers during a crash.

Some features do not require any action on your part. These include a strong steel framework that forms a safety cage around the passenger compartment; front and rear crush zones; a collapsible steering column; and tensioners that tighten the front seat belts in a crash.

CONTINUED

However, you and your passengers can't take full advantage of these features unless you remain sitting in a proper position and ***always wear your seat belts***. In fact, some safety features can contribute to injuries if they are not used properly.

The following pages explain how you can take an active role in protecting yourself and your passengers.

Seat Belts

Your vehicle is equipped with seat belts in all seating positions.

Your seat belt system also includes an indicator on the instrument panel to remind you and your passengers to fasten your seat belts.

Why Wear Seat Belts

Seat belts are the single most effective safety device for adults and larger children. (Infants and smaller children must be properly restrained in child seats.)

Not wearing a seat belt properly increases the chance of serious injury or death in a crash, even though your vehicle has airbags.

In addition, most states and all Canadian provinces require you to wear seat belts.

⚠ WARNING

Not wearing a seat belt properly increases the chance of serious injury or death in a crash, even though your vehicle has airbags.

Be sure you and your passengers always wear seat belts and wear them properly.

When properly worn, seat belts:

- Keep you connected to the vehicle so you can take advantage of the vehicle's built-in safety features.
- Help protect you in almost every type of crash, including frontal, side, and rear impacts and rollovers.

- Help keep you from being thrown against the inside of the vehicle and against other occupants.
- Keep you from being thrown out of the vehicle.
- Help keep you in a good position should the airbags ever deploy. A good position reduces the risk of injury from an inflating airbag and allows you to get the best advantage from the airbag.

Of course, seat belts cannot completely protect you in every crash. But in most cases, seat belts can reduce your risk of serious injury.

What you should do: Always wear your seat belt, and make sure you wear it properly.

Airbags

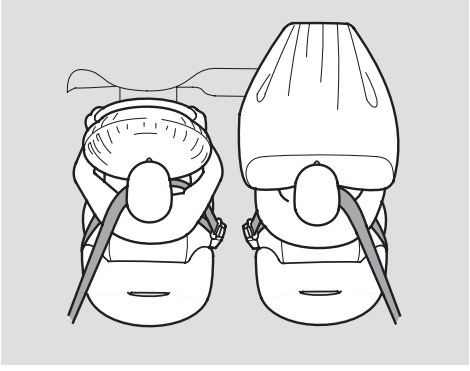

Your vehicle has a Supplemental Restraint System (SRS) with front airbags to help protect the heads and chests of the driver and a front seat passenger during a moderate to severe frontal collision (see page 23 for more information on how your front airbags work).

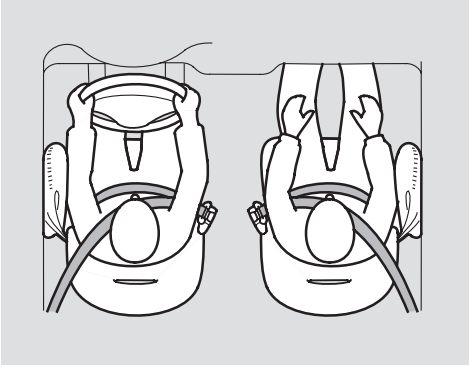

Your vehicle also has side airbags to help protect the upper torso of the driver or a front seat passenger during a moderate to severe side impact (see page 25 for more information on how your side airbags work).

Your Vehicle's Safety Features

The most important things you need to know about your airbags are:

- ***Airbags do not replace seat belts.*** They are designed to supplement the seat belts.
- ***Airbags offer no protection in rear impacts, or minor frontal or side collisions.***
- ***Airbags can pose hazards.*** To do their job, airbags must inflate with tremendous force. So while airbags help save lives, they can cause minor injuries or more serious or even fatal injuries if occupants are not properly restrained or sitting properly.

What you should do: Always wear your seat belt properly, and sit upright and as far back from the steering wheel as possible while allowing full control of the vehicle. A front passenger should move their seat as far back from the dashboard as possible.

The rest of this section gives more detailed information about how you can maximize your safety.

Remember, however, that no safety system can prevent all injuries or deaths that can occur in severe crash, even when seat belts are properly worn and the airbags deploy.

Protecting Adults and Teens

Introduction

The following pages provide instructions on how to properly protect the driver, adult passengers and teenage children who are large enough and mature enough to drive or ride in the front seat.

See pages 32 — 44 for important guidelines on how to properly protect infants, small children, and larger children who ride in your vehicle.

1. Close and Lock the Doors

After everyone has entered the vehicle, be sure the doors are closed and locked.

Your vehicle has a door monitor indicator on the instrument panel to indicate when a specific door is not tightly closed.

Locking the doors reduces the chance of someone being thrown out of the vehicle during a crash, and it helps prevent passengers from accidentally opening a door and falling out.

Locking the doors also helps prevent an outsider from unexpectedly opening a door when you come to a stop.

See page 67 for how to lock the doors, and page 54 for how the door monitor indicator works.

2. Adjust the Front Seats

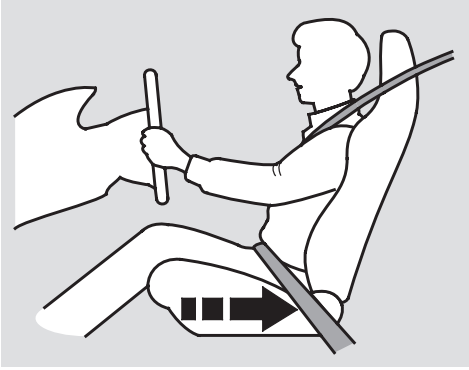

Adjust the driver's seat as far to the rear as possible while allowing you to maintain full control of the vehicle. Have a front passenger adjust their seat as far to the rear as possible.

If you sit too close to the steering wheel or dashboard, you can be seriously injured by an inflating front airbag, or by striking the steering wheel or dashboard.

CONTINUED

The National Highway Traffic Safety Administration and Transport Canada recommend that drivers allow at least 10 inches (25 cm) between the center of the steering wheel and the chest.

If you cannot get far enough away from the steering wheel and still reach the controls, we recommend that you investigate whether some type of adaptive equipment may help.

⚠ WARNING

Sitting too close to a front airbag can result in serious injury or death if the front airbags inflate.

Always sit as far back from the front airbags as possible.

Once your seat is adjusted correctly, rock it back and forth to make sure it is locked in position.

See page 71 for how to adjust the front seats.

3.Adjust the Seat-Backs

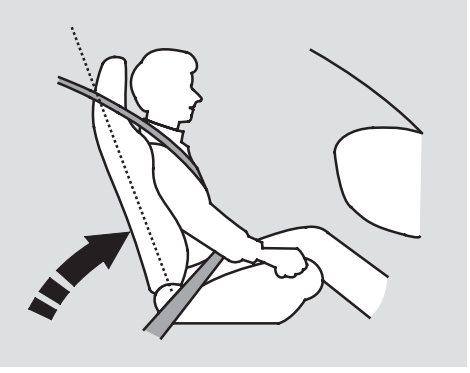

Adjust the driver's seat-back to a comfortable, upright position, leaving ample space between your chest and the airbag cover in the center of the steering wheel.

Passengers with adjustable seat-backs should also adjust their seat-back to a comfortable, upright position.

⚠ WARNING

Reclining the seat-back too far can result in serious injury or death in a crash.

Adjust the seat-back to an upright position, and sit well back in the seat.

Reclining a seat-back so that the shoulder part of the belt no longer rests against the occupant's chest reduces the protective capability of the belt. It also increases the chance of sliding under the belt in a crash and being seriously injured. The farther a seat-back is reclined, the greater the risk of injury.

See page 71 for how to adjust the seat-backs.

4. Fasten and Position the Seat Belts

Insert the latch plate into the buckle, then tug on the belt to make sure the belt is securely latched. Check that the belt is not twisted, because a twisted belt can cause serious injuries in a crash.

Position the lap part of the belt as low as possible across your hips, then pull up on the shoulder part of the belt so the lap part fits snugly. This lets your strong pelvic bones take the force of a crash and reduces the chance of internal injuries.

CONTINUED

If necessary, pull up on the belt again to remove any slack, then check that the belt rests across the center of your chest and over your shoulder. This spreads the forces of a crash over the strongest bones in your upper body.

⚠ WARNING

Improperly positioning the seat belts can cause serious injury or death in a crash.

Make sure all seat belts are properly positioned before driving.

Never place the shoulder portion of a lap/shoulder belt under your arm or behind your back. This could cause very serious injuries in a crash.

If a seat belt doesn't seem to work properly, it may not protect the occupant in a crash.

No one should sit in a seat with an inoperative seat belt. Using a seat belt that is not working properly can result in serious injury or death. Have your dealer check the belt as soon as possible.

See page 19 for additional information about your seat belts and how to take care of them.

5. Maintain a Proper Sitting Position

After all occupants have adjusted their seats and put on seat belts, it is very important that they continue to sit upright, well back in their seats, with their feet on the floor, until the vehicle is parked and the engine is off.

Sitting improperly can increase the chance of injury during a crash. For example, if an occupant slouches, lies down, turns sideways, sits forward, leans forward or sideways, or puts one or both feet up, the chance of injury during a crash is greatly increased.

In addition, an occupant who is out of position in the front seat can be seriously or fatally injured in a crash by striking interior parts of the vehicle or being struck by an inflating airbag.

⚠ WARNING

Sitting improperly or out of position can result in serious injury or death.

Always sit upright, well back in the seat, with your feet on the floor.

Advice for Pregnant Women

If you are pregnant, the best way to protect yourself and your unborn child when driving or riding in a vehicle is to always wear a seat belt, and keep the lap part of the belt as low as possible across the hips.

When driving, remember to sit upright and adjust the seat as far back as possible while allowing full control of the vehicle. When riding as a front passenger, adjust the seat as far back as possible.
This will reduce the risk of injuries to both you and your unborn child that can be caused by a crash or an inflating front airbag.

Each time you have a checkup, ask your doctor if it's okay for you to drive.

Additional Safety Precautions

- ***Two people should never use the same seat belt.*** If they do, they could be very seriously injured in a crash.

- ***Do not put any accessories on seat belts.*** Devices intended to improve occupant comfort or reposition the shoulder part of a seat belt can reduce the protective capability of the seat belt and increase the chance of serious injury in a crash.

- ***Do not place hard or sharp objects between yourself and a front airbag.*** Carrying hard or sharp objects on your lap, or driving with a pipe or other sharp object in your mouth, can result in injuries if your front airbag inflates.

- ***Do not attach or place objects on the front airbag covers.*** Objects on the covers marked "SRS AIRBAG" could interfere with the proper operation of the airbags or be propelled inside the vehicle and hurt someone if the airbags inflate.

- ***Do not attach hard objects on or near a door.*** If a side airbag inflates, a cup holder or other hard object attached on or near the door could be propelled inside the vehicle and hurt someone.

- ***Keep your hands and arms away from the airbag covers.*** If your hands or arms are close to an airbag cover, they could be injured if the airbag inflates.

Additional Information About Your Seat Belts

Seat Belt System Components

Your seat belt system includes lap/shoulder belts in all four seating positions. The front seat belts are also equipped with automatic seat belt tensioners.

The seat belt system includes an indicator on the instrument panel to remind you and your passengers to fasten your belts.

If you turn the ignition switch to ON (II) without fastening your belt, a beeper will sound and the indicator will blink. The beeper will stop after a few seconds, but the indicator will stay on until the driver's seat belt is fastened.

Lap/Shoulder Belt

The lap and shoulder belt goes over your shoulder, across your chest, and across your hips.

To fasten the belt, insert the latch plate into the buckle, then tug on the belt to make sure the buckle is latched (see page 15 for how to properly position the belt).

To unlock the belt, push the red PRESS button on the buckle. Guide the belt across your body so that it retracts completely. After exiting the vehicle, be sure the belt is out of the way and will not get closed in the door.

All seat belts have an emergency locking retractor. In normal driving, the retractor lets you move freely in your seat while it keeps some tension on the belt. During a collision or sudden stop, the retractor automatically locks the belt to help restrain your body.

The seat belts in all positions except the driver's have an additional locking mechanism that must be activated to secure a child seat (see page 38).

If the shoulder part of the belt is pulled all the way out, the locking mechanism will activate. The belt will retract, but it will not allow the passenger to move freely.

CONTINUED

Additional Information About Your Seat Belts

To deactivate the locking mechanism, unlatch the buckle and let the seat belt fully retract. To refasten the seat belt, pull it out only as far as needed.

Automatic Seat Belt Tensioners

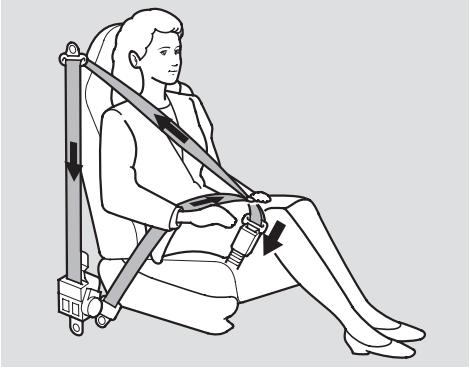

For added protection, the front seat belts are equipped with automatic seat belt tensioners. When activated, the tensioners immediately tighten the belts to help hold the driver and a front passenger in place.

The tensioners are designed to activate primarily in frontal collisions, and they should activate in any collision severe enough to cause front-airbag inflation.

The tensioners can also be activated during a collision in which the front airbags do not deploy. In this case, the airbags would not be needed, but the additional restraint could be helpful.

When the tensioners are activated, the seat belts will remain tight until they are unbuckled in the normal manner.

Additional Information About Your Seat Belts

Seat Belt Maintenance
For safety, you should check the condition of your seat belts regularly.

Pull each belt out fully and look for frays, cuts, burns, and wear. Check that the latches work smoothly and the belts retract easily. Any belt that is not in good condition or not working properly will not provide good protection and should be replaced as soon as possible.

Acura provides a lifetime warranty on seat belts for U.S. models. See your *Acura Warranty Information* booklet for details.

If a seat belt is worn during a crash, it must be replaced by your dealer. A belt that has been worn during a crash may not provide the same level of protection in a subsequent crash.

The dealer should also inspect the anchors for damage and replace them if needed. If the automatic seat belt tensioners activate during a crash, they must be replaced.

For information on how to clean your seat belts, see page 179 .

⚠ WARNING

Not checking or maintaining seat belts can result in serious injury or death if the seat belts do not work properly when needed.

Check your seat belts regularly and have any problem corrected as soon as possible.

Additional Information About Your Airbags

Airbag System Components
Your airbag system includes:

- Two SRS (Supplemental Restraint System) front airbags. The driver's airbag is stored in the center of the steering wheel; the front passenger's airbag is stored in the dashboard. Both are marked "SRS AIRBAG" (see page 23).
- Two side airbags, one for the driver and one for a front passenger. The airbags are stored in the outer edges of the seat-backs. Both are marked "SIDE AIRBAG" (see page 25).
- Automatic front seat belt tensioners (see page 20).
- Sensors that can detect a moderate to severe frontal or side impact.
- Sensors that can detect whether a child is in the passenger's side airbag path and automatically turn the airbag off (see page 25).
- A sophisticated electronic system that continually monitors and records information about the sensors, the control unit, the airbag activators, the seat belt tensioners, and driver and front passenger seat belt use when the ignition is in the ON (II) position.
- An indicator on the instrument panel that alerts you to a possible problem with your airbags, sensors, or seat belt tensioners (see page 26).
- An indicator on the instrument panel that alerts you that the passenger's side airbag has been turned off (see page 27).
- Emergency backup power in case your vehicle's electrical system is disconnected in a crash.

Additional Information About Your Airbags

How Your Front Airbags Work

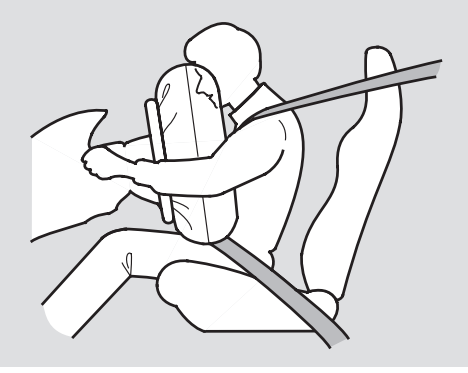

If you ever have a moderate to severe frontal collision, sensors will detect the vehicle's rapid deceleration.

If the rate of deceleration is high enough, the control unit will instantly inflate the driver's and front passenger's front airbags, at the time and with the force needed.

During a frontal crash, your seat belt restrains your lower body and torso, and the front airbag helps protect your head and chest.

Although both airbags normally inflate within split second of each other, it is possible for only one airbag to deploy.

This can happen if the severity of a collision is at the margin, or threshold, that determines whether or not the airbags will deploy. In such cases, the seat belt will provide sufficient protection, and the supplemental protection offered by the airbag would be minimal.

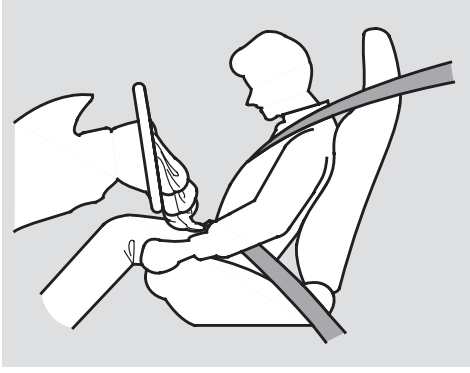

After inflating, the front airbags will immediately deflate, so they won't interfere with the driver's visibility, or the ability to steer or operate other controls.

CONTINUED

Additional Information About Your Airbags

The total time for inflation and deflation is one-tenth of a second, so fast that most occupants are not aware that the airbags deployed until they see them lying in their laps.

After a crash, you may see what looks like smoke. This is actually powder from the airbag's surface. Although the powder is not harmful, people with respiratory problems may experience some temporary discomfort. If this occurs, get out of the vehicle as soon as it is safe to do so.

Dual-Stage Airbags
Your front airbags are dual-stage airbags. This means they have two inflation stages that can be ignited sequentially or simultaneously, depending on crash severity.

In a ***more severe*** crash, both stages will ignite simultaneously to provide the quickest and greatest protection.

In a ***less severe*** crash, one stage will ignite first, then the second stage will ignite a split second later. This provides longer airbag inflation time with a little less force.

Dual-Threshold Airbags
Your front airbags are also dual-threshold airbags. Airbags with this feature have two deployment thresholds that depend on whether or not the occupant is wearing a seat belt.

If the occupant's belt is ***not latched***, the airbag will deploy at the same threshold as a conventional airbag.

If the occupant's belt ***is latched***, the airbag will inflate at a slightly higher threshold, when the airbag would be needed to supplement the protection provided by the seat belt.

Additional Information About Your Airbags

How Your Side Airbags Work

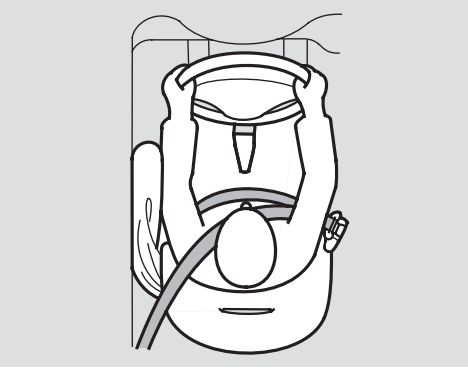

If you ever have a moderate to severe side impact, sensors will detect rapid deceleration and signal the control unit to instantly inflate either the driver's or the passenger's side airbag.

Only one airbag will deploy during a side impact. If the impact is on the passenger's side, the passenger's side airbag will deploy even if there is no passenger.

To get the best protection from the side airbags, front seat occupants should wear their seat belts and sit upright and well back in their seats.

Side Airbag Cutoff System

To reduce the risk of injury from an inflating side airbag, your vehicle has an automatic cutoff system for the passenger's side airbag.

Although Acura does not encourage children to ride in front, this system is designed to shut off the side airbag if a child leans into the side airbag's path.

The side airbag may also shut off if a short adult leans sideways, or a larger adult slouches and leans sideways into the airbag's deployment path.

Objects placed on the front passenger seat can also cause the side airbag to be shut off.

CONTINUED

Additional Information About Your Airbags

If the Side Airbag Off Indicator comes on (see page 27), have the passenger sit upright. Once the passenger is out of the airbag's deployment path, the system will turn the airbag back on, and the indicator will go out.

There will be some delay between the moment the passenger moves into or out of the airbag deployment path and when the indicator comes on or goes off.

A front seat passenger should not use a cushion or other object as a backrest. It may prevent the cutoff system from working properly.

How the SRS Indicator Works

The SRS indicator alerts you to a potential problem with your airbags or seat belt tensioners.

When you turn the ignition switch to ON (II), this indicator will come on briefly then go out. This tells you the system is working properly.

If the indicator comes on at any other time, or does not come on at all, you should have the system checked by your dealer. For example:

- If the SRS indicator does not come on after you turn the ignition switch to ON (II).
- If the indicator stays on after the engine starts.
- If the indicator comes on or flashes on and off while you drive.

⚠ WARNING

Ignoring the SRS indicator can result in serious injury or death if the airbag systems or tensioners do not work properly.

Have your vehicle checked by a dealer as soon as possible if the SRS indicator alerts you to a possible problem.

If you see any of these indications, the airbags and seat belt tensioners may not work properly when you need them.

How the Side Airbag Off Indicator Works

U.S. Canada

This indicator alerts you that the passenger's side airbag has been automatically shut off. It does ***not*** mean there is a problem with your side airbags.

When you turn the ignition switch to ON (II), the indicator should come on briefly and go out (see page 52). If it doesn't light, stays on, or comes on while driving without a passenger in the front seat, have the system checked.

Airbag Service

Your airbag systems are virtually maintenance free, and there are no parts you can safely service. However, you must have your vehicle serviced if:

- ***An airbag ever inflates.*** Any airbag that has deployed must be replaced along with the control unit and other related parts. If a front airbag inflates, the seat belt tensioners must also be replaced.

  Do not try to remove or replace any airbag by yourself. This must be done by your dealer or a knowledgeable body shop.

- ***The SRS indicator alerts you to a problem.*** Take your vehicle to an authorized dealer as soon as possible. If you ignore this indication, your airbags may not operate properly.

Additional Safety Precautions

- ***Do not attempt to deactivate your airbags.*** Together, airbags and seat belts provide the best protection.

- ***Do not tamper with airbag components or wiring for any reason.*** Tampering could cause the airbags to deploy, possibly causing very serious injury.

- ***Do not cover or replace front seat-back covers without consulting your dealer.*** Improperly replacing or covering front seat-back covers can prevent your side airbags from inflating during a side impact.

Protecting Children — General Guidelines

Children depend on adults to protect them. However, despite their best intentions, many adults do not know how to *properly* protect child passengers.

If you have children, or ever need to drive with a child in your vehicle, be sure to read this section. It begins with important general guidelines, then presents special information for infants, small children, and larger children.

All Children Must Be Restrained
Each year, many children are injured or killed in vehicle crashes because they are either unrestrained or not properly restrained. In fact, vehicle accidents are the number one cause of the death of children ages 12 and under.

To reduce the number of child deaths and injuries, every U.S. state and Canadian province requires that infants and children be properly restrained when they ride in a vehicle.

Infants and small children must be restrained in an approved child seat that is properly secured to the vehicle (see pages 32 — 33).

⚠ WARNING

Children who are unrestrained or improperly restrained can be seriously injured or killed in a crash.

Any child too small for a seat belt should be properly restrained in a child seat. A larger child should be properly restrained with a seat belt and use a booster seat if necessary.

Larger children must be restrained with a lap/shoulder belt and ride on a booster seat until the seat belt fits them properly (see pages 41 — 44).

Protecting Children — General Guidelines

All Children Should Sit in a Back Seat

According to accident statistics, children of all ages and sizes are safer when they are restrained in a back seat. The National Highway Traffic Safety Administration and Transport Canada recommend that all children age 12 and under be properly restrained in a back seat.

Children who ride in back are less likely to be injured by striking interior vehicle parts during a collision or hard braking. Also, children cannot be injured by an inflating front airbag when they ride in the back.

The Passenger's Front Airbag Poses Serious Risks

Front airbags have been designed to help protect adults in a moderate to severe frontal collisions. To do this the passenger's front airbag is quite large, and it can inflate with enough force to cause very serious injuries.

Infants

Never put a rear-facing child seat in the front seat of a vehicle equipped with a passenger's front airbag. If the airbag inflates, it can hit the back of the child seat with enough force to kill or very seriously injure an infant.

Small Children

Placing a forward-facing child seat in the front seat of a vehicle equipped with passenger's front airbag can be hazardous. If the vehicle seat is too far forward, or the child's head is thrown forward during a collision, an inflating front airbag can strike the child with enough force to kill or very seriously injure a small child.

Larger Children

Children who have outgrown child seats are also at risk of being injured or killed by an inflating passenger's front airbag. Whenever possible, larger children should sit in the back seat, on a booster seat if needed, and be properly restrained with a seat belt (see page 41 for important information about protecting larger children).

Protecting Children — General Guidelines

To remind you of the passenger's front airbag hazards, and that children must be properly restrained in a back seat, your vehicle has warning labels on the dashboard and on the front visors. Please read and follow the instructions on these labels.

U.S. Models

⚠ WARNING

DEATH or SERIOUS INJURY can occur

- Children 12 and under can be killed by the air bag
- The BACK SEAT is the SAFEST place for children
- NEVER put a rear-facing child seat In the front
- Sit as far back as possible from the air bag
- ALWAYS use SEAT BELTS and CHILD RESTRAINTS

⚠ WARNING

Children Can Be KILLED or INJURED by Passenger Air Bag

- The back seat is the safest place for children 12 and under.
- Make sure all children use seat belts or child seats.

To be removed by owner only.

Canadian Models

CAUTION
TO AVOID SERIOUS INJURY :
- FOR MAXIMUM SAFETY PROTECTION IN ALL TYPES OF CRASHES, YOU MUST ALWAYS WEAR YOUR SAFETY BELT.
- DO NOT INSTALL REARWARD-FACING CHILD SEATS IN ANY FRONT PASSENGER SEAT POSITION.
- DO NOT SIT OR LEAN UNNECESSARILY CLOSE TO THE AIR BAG.
- DO NOT PLACE ANY OBJECTS OVER THE AIR BAG OR BETWEEN THE AIR BAG AND YOURSELF.
- SEE THE OWNER'S MANUAL FOR FURTHER INFORMATION AND EXPLANATIONS.

PRÉCAUTION :
POUR EVITER DES BLESSURES GRAVES :
- POUR PROFITER D'UNE PROTECTION MAXIMALE LORS D'UNE COLLISION BOUCLEZ TOUJOURS VOTRE CEINTURE DE SECURITE.
- NINSTALLEZ JAMAIS UN SIEGE POUR ENFANTS FAISANT FACE A L'ARRIERE SUR LE SIEGE DU PASSAGER AVANT.
- NE VOUS APPUYEZ PAS ET NE VOUS ASSOYEZ PAS PRES DU COUSSIN GONFLABLE.
- NE DEPOSEZ AUCUN OBJET SUR LE COUSSIN GONFLABLE OU ENTRE LE COUSSIN GONFLABLE ET VOUS.
- LISEZ LE GUIDE UTILISATEUR POUR DE PULS AMPLES RENSEIGNEMENTS.

If You Must Drive with Several Children

Your vehicle has a back seat where children can be properly restrained. If you ever have to carry a group of children, and a child must ride in front:

- Place the largest child in the front seat, provided the child is large enough to wear the lap/shoulder belt properly (see page 41).
- Move the vehicle seat as far to the rear as possible (see page 13).
- Have the child sit upright and well back in the seat (see page 16).
- Make sure the seat belt is properly positioned and secured (see page 15).

Protecting Children — General Guidelines

If a Child Requires Close Attention

Many parents say they prefer to put an infant or small child in the front passenger seat so they can watch the child, or because the child requires attention.

Placing a child in the front seat exposes the child to hazards in a frontal collision, and paying close attention to a child distracts the driver from the important tasks of driving, placing both of you at risk.

If a child requires physical attention or frequent visual contact, we strongly recommend that another adult ride with the child in the back seat. The back seat is far safer for a child than the front.

Additional Safety Precautions

- ***Never hold an infant or child on your lap.*** If you are not wearing a seat belt in a crash, you could be thrown forward and crush the child against the dashboard or a seat-back. If you are wearing a seat belt the child can be torn from your arms and be seriously hurt or killed.

- ***Never put a seat belt over yourself and a child.*** During a crash, the belt could press deep into the child and cause serious or fatal injuries.

- ***Never let two children use the same seat belt.*** If they do, they could be very seriously injured in a crash.

- ***Do not leave children alone in a vehicle.*** Leaving children without adult supervision is illegal in most states and Canadian provinces, and can be very hazardous. For example, infants and small children left in a vehicle on a hot day can die from heatstroke. A child left alone with the key in the ignition can accidentally set the vehicle in motion, possibly injuring themselves or others.

- ***Lock both doors and the hatch when your vehicle is not in use.*** Children who play in vehicles can accidentally get trapped inside. Teach your children not to play in or around vehicles.

- ***Keep vehicle keys and remote transmitters out of reach of children.*** Even very young children learn how to unlock vehicle doors, turn on the ignition switch, and open the hatch, which can lead to accidental injury or death.

Protecting Infants and Small Children

Protecting Infants

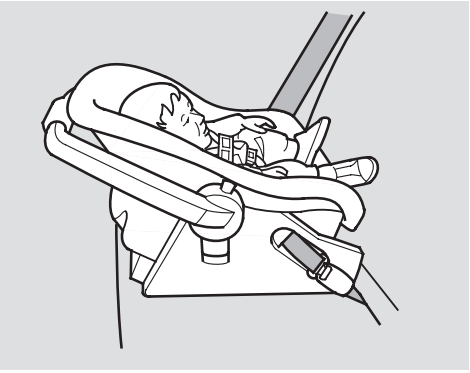

Child Seat Type
An infant must be properly restrained in a rear-facing, reclining child seat until the child reaches the seat maker's weight or height limit for the seat and the child is at least one year old.

Only a rear-facing child seat provides proper support for a baby's head, neck, and back.

Two types of seats may be used: a seat designed exclusively for infants, or a convertible seat used in the rear-facing, reclining mode.

Do not put a rear-facing child seat in a forward-facing position. If placed facing forward, an infant could be very seriously injured during a frontal collision.

Child Seat Placement
A rear-facing child seat can be placed in any seating position in the back seat, but not in the front. ***Never put a rear-facing child seat in the front seat.***

If the passenger's front airbag inflates, it can hit the back of the child seat with enough force to kill or seriously injure an infant.

When properly installed, a rear-facing child seat may prevent the driver or a front passenger from moving the seat as far back as recommended, or from locking the seat-back in the desired position.

In either situation, we strongly recommend that you install the child seat directly behind the front passenger seat, move the front seat as far forward as needed, and leave it unoccupied. Or you may wish to get a smaller child seat that allows you to safely carry a front passenger.

⚠ WARNING

Placing a rear-facing child seat in the front seat can result in serious injury or death if the passenger's front airbag inflates.

Always place a rear-facing child seat in the back seat, not the front.

Protecting Small Children

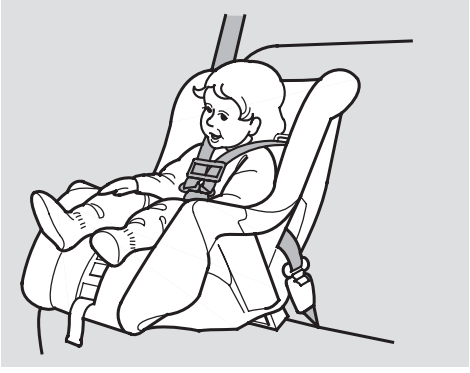

Child Seat Type

A child who is at least one year old, and who fits within the child seat maker's weight and height limits, should be restrained in a forward-facing, upright child seat.

Of the different seats available, we recommend those that have a five-point harness system as shown.

Child Seat Placement

We strongly recommend placing a forward-facing child seat in a back seat, not the front.

If it is necessary to put a forward-facing child seat in the front, move the vehicle seat as far to the rear as possible, be sure the child seat is firmly secured to the vehicle, and the child is properly strapped in the seat.

⚠ WARNING

Placing a forward-facing child seat in the front seat can result in serious injury or death if the front airbag inflates.

If you must place a forward-facing child seat in front, move the vehicle seat as far back as possible, and properly restrain the child.

Selecting a Child Seat

When buying a child seat, you need to choose either a conventional child seat, or one designed for use with the Lower Anchors and Tethers for Children (LATCH) system.

Conventional child seats must be secured to a vehicle with a seat belt, whereas LATCH-compatible seats are secured by attaching the seat to hardware built into the rear seats.

Since LATCH-compatible child seats are easier to install and reduce the possibility of improper installation, we recommend selecting this style.

We also recommend selecting a LATCH-compatible seat with a rigid, rather than a flexible, anchor (see page 36).

In seating positions and vehicles not equipped with LATCH, a LATCH-compatible child seat can be installed using a seat belt.

Whatever type of seat you choose, to provide proper protection, a child seat should meet three requirements:

1. ***The child seat should meet U.S. or Canadian Motor Vehicle Safety Standard 213.*** Look for FMVSS 213 or CMVSS 213 on the box.
2. ***The child seat should be of the proper type and size to fit the child.*** Rear-facing for infants, forward-facing for small children.
3. ***The child seat should fit the vehicle seating position (or positions) where it will be used.***

Before purchasing a conventional child seat, or using a previously purchased one, we recommend that you test the seat in the specific vehicle seating position, or positions, where the seat will be used.

Installing a Child Seat

After selecting a proper child seat, and a good place to install the seat, there are three main steps in installing the seat:

1. ***Properly secure the child seat to the vehicle.*** All child seats must be secured to the vehicle with the lap part of a lap/shoulder belt or with the LATCH (Lower Anchors and Tethers for Children) system. A child whose seat is not properly secured to the vehicle can be endangered in a crash.

2. ***Make sure the child seat is firmly secured.*** After installing a child seat, push and pull the seat forward and from side to side to verify that it is secure.

A child seat secured with a seat belt should be installed as firmly as possible. However, it does not need to be "rock solid." Some side-to-side movement can be expected and should not reduce the child seat's effectiveness.

If the child seat is not secure, try installing it in a different seating position, or use a different style of child seat that can be firmly secured.

3. ***Secure the child in the child seat.*** Make sure the child is properly strapped in the child seat according to the child seat maker's instructions. A child who is not properly secured in a child seat can be seriously injured in a crash.

The following pages provide guidelines on how to properly install a child seat. A forward-facing child seat is used in all examples, but the instructions are the same for a rear-facing child seat.

Installing a Child Seat

Installing a Child Seat with LATCH

Your vehicle is equipped with LATCH (Lower Anchors and Tethers for Children) at the rear seats.

The lower anchors are located between the seat-back and seat bottom, and are to be used only with a child seat designed for use with LATCH.

The location of each anchor is indicated by a small button above the anchor point.

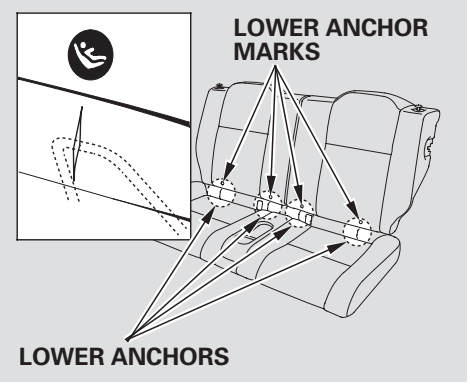

To install a LATCH-compatible child seat:

1. Move the seat belt buckle or tongue away from the lower anchors.

2. Make sure there are no objects near the anchors that could prevent a secure connection between the child seat and the anchors.

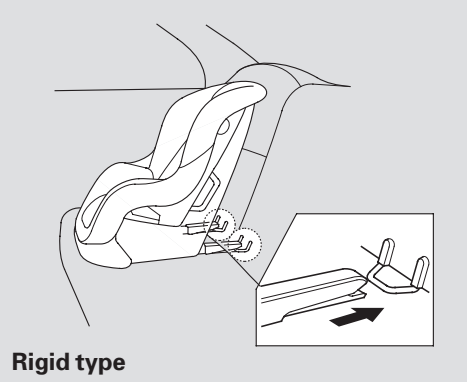
Rigid type

3. Place the child seat on the vehicle seat, then attach the seat to the lower anchors according to the child seat maker's instructions.

   Some LATCH-compatible seats have a rigid-type connector as shown above.

Installing a Child Seat

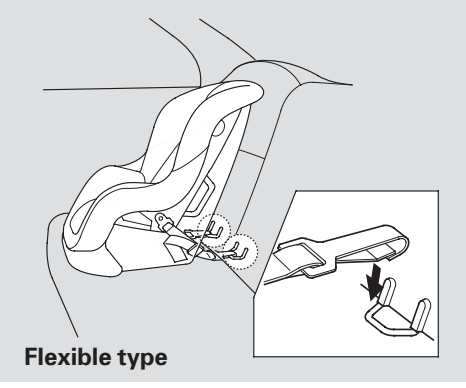

Other LATCH-compatible seats have a flexible-type connector as shown above.

4. Whatever type you have, follow the child seat maker's instructions for adjusting or tightening the fit.

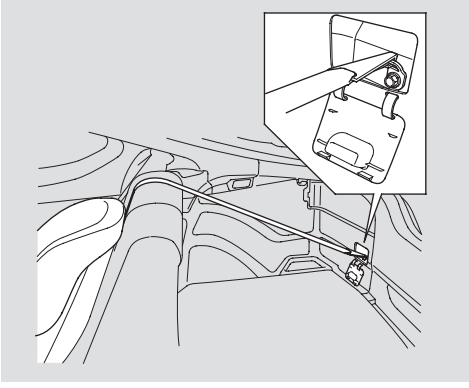

5. Route the tether strap over the top of the seat-back, making sure the strap is not twisted.

6. Attach the tether strap hook to the tether anchor, then tighten the strap as instructed by the child seat maker.

7. Push and pull the child seat forward and from side to side to verify that it is secure.

Installing a Child Seat

Installing a Child Seat with a Lap/ Shoulder Belt
When not using the LATCH system, all child seats must be secured to the vehicle with the lap part of a lap/ shoulder belt.

In addition, the lap/shoulder belts in all seating positions except the driver's have a locking mechanism that must be activated to secure a child seat.

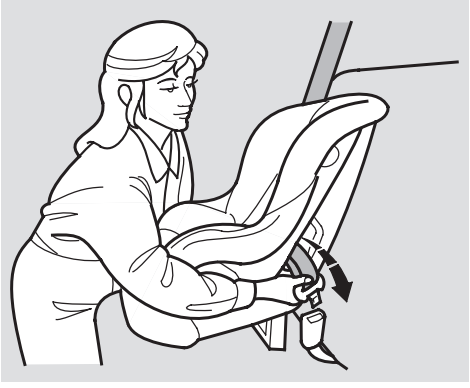

1. With the child seat in the desired seating position, route the belt through the child seat according to the seat maker's instructions, then insert the latch plate into the buckle.

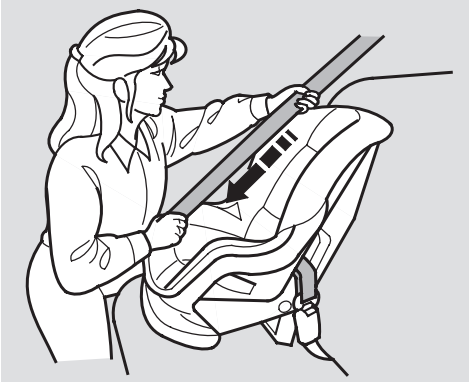

2. To activate the lockable retractor, slowly pull the shoulder part of the belt all the way out until it stops, then let the belt feed back into the retractor.

3. After the belt has retracted, tug on it. If the belt is locked, you will not be able to pull it out. If you can pull the belt out, it is not locked, and you will need to repeat these steps.

Installing a Child Seat

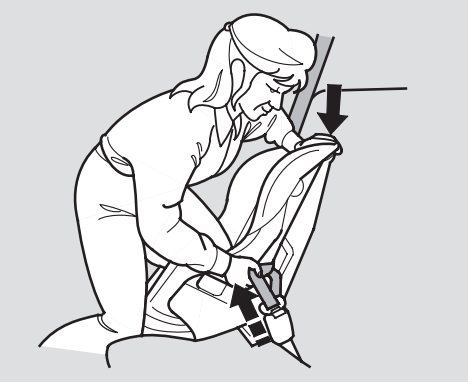

4. After confirming that the belt is locked, grab the shoulder part of the belt near the buckle, and pull up to remove any slack from the lap part of the belt. Remember, if the lap part of the belt is not tight, the child seat will not be secure.

   To remove slack, it may help to put weight on the child seat, or push on the back of the seat while pulling up on the belt.

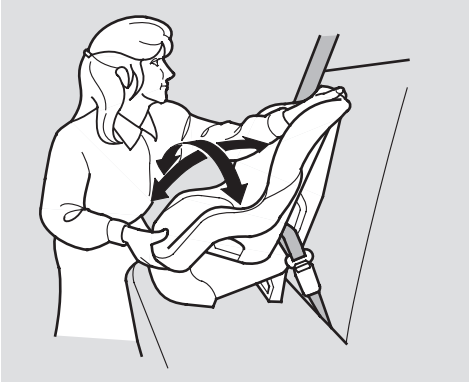

5. Push and pull the child seat forward and from side to side to verify that it is firmly secured during normal driving maneuvers. If the child seat is not secure, unlatch the belt, allow it to retract fully, then repeat these steps.

To deactivate the locking mechanism and remove a child seat, unlatch the buckle, unroute the seat belt, and let the belt fully retract.

Installing a Child Seat with a Tether

A child seat with a tether can be installed in either seating position in the back seat, using one of the anchorage points.

Since a tether can provide additional security to the lap/shoulder belt installation, we recommend using a tether whenever one is required or available.

CONTINUED

Installing a Child Seat

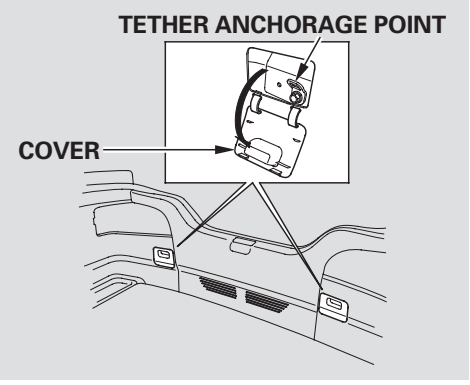

The tether anchorage points are located under plastic covers. Pivot the cover downward to access the anchorage point.

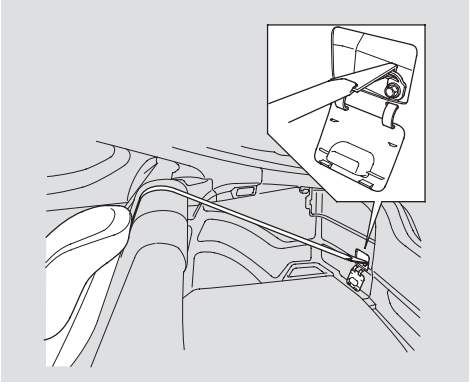

1. After properly securing the child seat (see page 38), route the tether strap over the seat-back.
2. Attach the tether strap hook to the anchor, making sure the strap is not twisted.
3. Tighten the strap according to the seat maker's instructions.

Protecting Larger Children

When a child reaches the recommended weight or height limit for a forward-facing child seat, the child should sit in a back seat on a booster seat and wear a lap/shoulder belt.

The following pages give instructions on how to check proper seat belt fit, what kind of booster seat to use if one is needed, and important precautions for a child who must sit in front.

⚠ WARNING

Allowing a child age 12 or under to sit in front can result in injury or death if the passenger's front airbag inflates.

If a child must ride in front, move the vehicle seat as far back as possible, use a booster seat if needed, have the child sit up properly and wear the seat belt properly.

Checking Seat Belt Fit

To determine if a lap/shoulder belt properly fits a child, have the child put on the seat belt, then ask yourself:

1. Does the child sit all the way back against the seat?

2. Do the child's knees bend comfortably over the edge of the seat?

CONTINUED

Protecting Larger Children

3. Does the shoulder belt cross between the child's neck and arm?

4. Is the lap part of the belt as low as possible, touching the child's thighs?

5. Will the child be able to stay seated like this for the whole trip?

If you answer yes to all these questions, the child is ready to wear the lap/shoulder belt correctly. If you answer no to any question, the child needs to ride on a booster seat.

Using a Booster Seat

A child who has outgrown a forward-facing child seat should ride in a back seat and use a booster seat until the lap/shoulder belt fits them properly without the booster.

Some states also require children to use a booster seat until they reach a given age or weight (e.g., 6 years or 60 lbs). Be sure to check current laws in the state or states where you intend to drive.

Booster seats can be high-back or low-back. Whichever style you select, make sure the booster seat meets federal safety standards (see page 34) and that you follow the booster seat maker's instructions.

If a child who uses a booster seat must ride in front, move the vehicle seat as far to the rear as possible, and be sure the child is wearing the seat belt properly.

A child may continue using a booster seat until the tops of their ears are even with the top of the vehicle's or booster's seat-back. A child of this height should be tall enough to use the lap/shoulder belt without a booster seat.

Protecting Larger Children

When Can a Larger Child Sit in Front

The National Highway Traffic Safety Administration and Transport Canada recommend that all children age 12 and under be properly restrained in the back seat.

If the passenger's front airbag inflates in a moderate to severe frontal collision, the airbag can cause serious injuries to a child who is unrestrained, improperly restrained, sitting too close to the airbag, or out of position.

A side airbag also poses risks. If any part of a larger child's body is in the path of a deploying side airbag, the child could receive possibly serious injuries.

Of course, children vary widely. And while age may be one indicator of when a child can safely ride in front, there are other important factors you should consider.

Physical Size

Physically, a child must be large enough for the lap/shoulder belt to properly fit (see page 41). If the seat belt does not fit properly, with or without the child sitting on a booster seat, the child should not sit in front.

Maturity

To safely ride in front, a child must be able to follow the rules, including sitting properly, and wearing the seat belt properly throughout a ride.

If you decide that a child can safely ride up front, be sure to:

- Carefully read the owner's manual, and make sure you understand all seat belt instructions and all safety information.
- Move the vehicle seat to the rear-most position.
- Have the child sit up straight, back against the seat, and feet on or near the floor.
- Check that the child's seat belt is properly and securely positioned.
- Supervise the child. Even mature children sometimes need to be reminded to fasten the seat belts or sit properly.

Protecting Larger Children

Additional Safety Precautions

- ***Do not let a child wear a seat belt across the neck.*** This could result in serious neck injuries during a crash.

- ***Do not let a child put the shoulder part of a seat belt behind the back or under the arm.*** This could cause very serious injuries during a crash. It also increases the chance that the child will slide under the belt in a crash and be injured.

- ***Two children should never use the same seat belt.*** If they do, they could be very seriously injured in a crash.

- ***Do not put any accessories on a seat belt.*** Devices intended to improve a child's comfort or reposition the shoulder part of a seat belt can make the belt less effective and increase the chance of serious injury in a crash.

Carbon Monoxide Hazard

Your vehicle's exhaust contains carbon monoxide gas. You should have no problem with carbon monoxide entering the vehicle in normal driving if you maintain your vehicle properly.

Have the exhaust system inspected for leaks whenever:

- The vehicle is raised for an oil change.
- You notice a change in the sound of the exhaust.
- The vehicle was in an accident that may have damaged the underside.

⚠ WARNING

Carbon monoxide gas is toxic. Breathing it can cause unconsciousness and even kill you.

Avoid any enclosed areas or activities that expose you to carbon monoxide.

High levels of carbon monoxide can collect rapidly in enclosed areas, such as a garage. Do not run the engine with the garage door closed. Even with the door open, run the engine only long enough to move the vehicle out of the garage.

With the hatch open, air flow can pull exhaust gas into your vehicle's interior and create a hazardous condition. If you must drive with the hatch open, open all the windows and set the heating and cooling system as shown below.

If you must sit in your parked vehicle with the engine running, even in an unconfined area, adjust the heating and cooling system as follows:

1. Push the button.
2. Select the mode.
3. Turn the fan on high speed.
4. Set the temperature control to a comfortable setting.

Safety Labels

These labels are in the locations shown. They warn you of potential hazards that could cause serious injury. Read these labels carefully.

If a label comes off or becomes hard to read, contact your dealer for a replacement.

RADIATOR CAP

DASHBOARD

U.S. models only

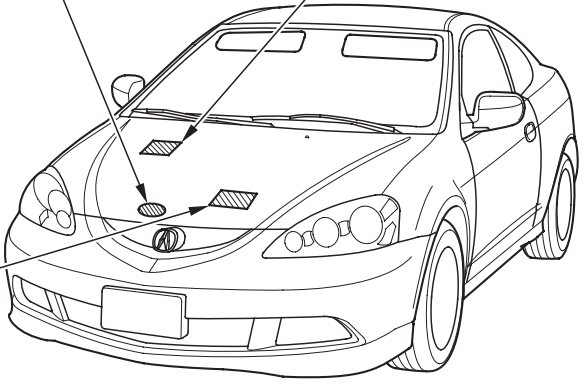

HOOD

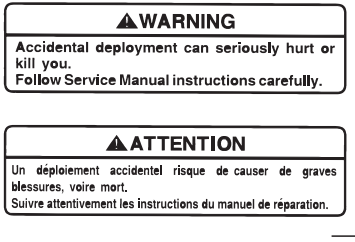

SUN VISOR

U.S. models

⚠ WARNING

DEATH or SERIOUS INJURY can occur

- Children 12 and under can be killed by the air bag
- The BACK SEAT is the SAFEST place for children
- NEVER put a rear-facing child seat in the front
- Sit as far back as possible from the air bag
- ALWAYS use SEAT BELTS and CHILD RESTRAINTS

Canadian models

CAUTION
TO AVOID SERIOUS INJURY :
- FOR MAXIMUM SAFETY PROTECTION IN ALL TYPES OF CRASHES, YOU MUST ALWAYS WEAR YOUR SAFETY BELT.
- DO NOT INSTALL REARWARD-FACING CHILD SEATS IN ANY FRONT PASSENGER SEAT POSITION.
- DO NOT SIT OR LEAN UNNECESSARILY CLOSE TO THE AIR BAG.
- DO NOT PLACE ANY OBJECTS OVER THE AIR BAG OR BETWEEN THE AIR BAG AND YOURSELF.
- SEE THE OWNER'S MANUAL FOR FURTHER INFORMATION AND EXPLANATIONS.

PRÉCAUTION :
POUR EVITER DES BLESSURES GRAVES :
- POUR PROFITER D'UNE PROTECTION MAXIMALE LORS D'UNE COLLISION BOUCLEZ TOUJOURS VOTRE CEINTURE DE SECURITE.
- NINSTALLEZ JAMAIS UN SIEGE POUR ENFANTS FAISANT FACE A L'ARRIERE SUR LE SIEGE DU PASSAGER AVANT.
- NE VOUS APPUYEZ PAS ET NE VOUS ASSOYEZ PAS PRES DU COUSSIN GONFLABLE.
- NE DEPOSEZ AUCUN OBJET SUR LE COUSSIN GONFLABLE OU ENTRE LE COUSSIN GONFLABLE ET VOUS.
- LISEZ LE GUIDE UTILISATEUR POUR DE PULS AMPLES RENSEIGNEMENTS.

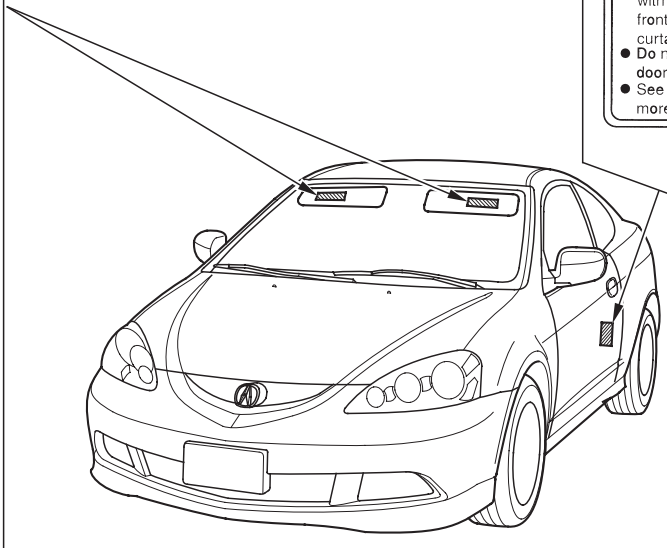

DOORJAMB

U.S. models

SIDE AIRBAG
- This car is equipped with side airbags in the front seats and side curtain airbags.
- Do not lean against the door.
- See owner's manual for more information.

Canadian models

SIDE AIRBAG
- This car is equipped with side airbags in the front seats and side curtain airbags.
- Do not lean against the door.
- See owner's manual for more information.

COUSSIN GONFLABLE LATERAL
- Cette automobile est équipée de coussins gonflables latéraux dans les sièges avant ainsi que de coussins gonflables latéraux de type rideau.
- Ne vous appuyez pas sur la porte.
- Consultez le Manuel du propriétaire pour en savoir plus.

Instruments and Controls

This section gives information about the controls and displays that contribute to the daily operation of your vehicle. All the essential controls are within easy reach.

Control Locations 50
Instrument Panel 51
Instrument Panel Indicators..... 52
Gauges 57
  Odometer..... 57
  Trip Meter 57
  Fuel Gauge 58
  Temperature Gauge 58
  Check Fuel Cap Indicator..... 58
Controls Near the Steering Wheel 59
Windshield Wipers and Washers .. 60
Turn Signal and Headlights..... 61
Instrument Panel Brightness 62
Hazard Warning Button..... 62
Rear Window Defogger 62
Steering Wheel Adjustment 63
Keys and Locks..... 64
Immobilizer System..... 65
Ignition Switch 66
Door Locks 67
  Power Door/Hatch Locks 67
  Hatch..... 68
Remote Transmitter..... 69
Seats 71
Seat Heaters 74
Cargo Area Cover 75
Power Windows 77
Moonroof 79
Mirrors 79
Parking Brake 81
Interior Convenience Items..... 82
  Beverage Holders..... 83
  Accessory Power Sockets..... 83
  Console Compartment 84
  Glove Box 84
  Vanity Mirror 85
  Coat Hook..... 85
Interior Lights 86

Control Locations

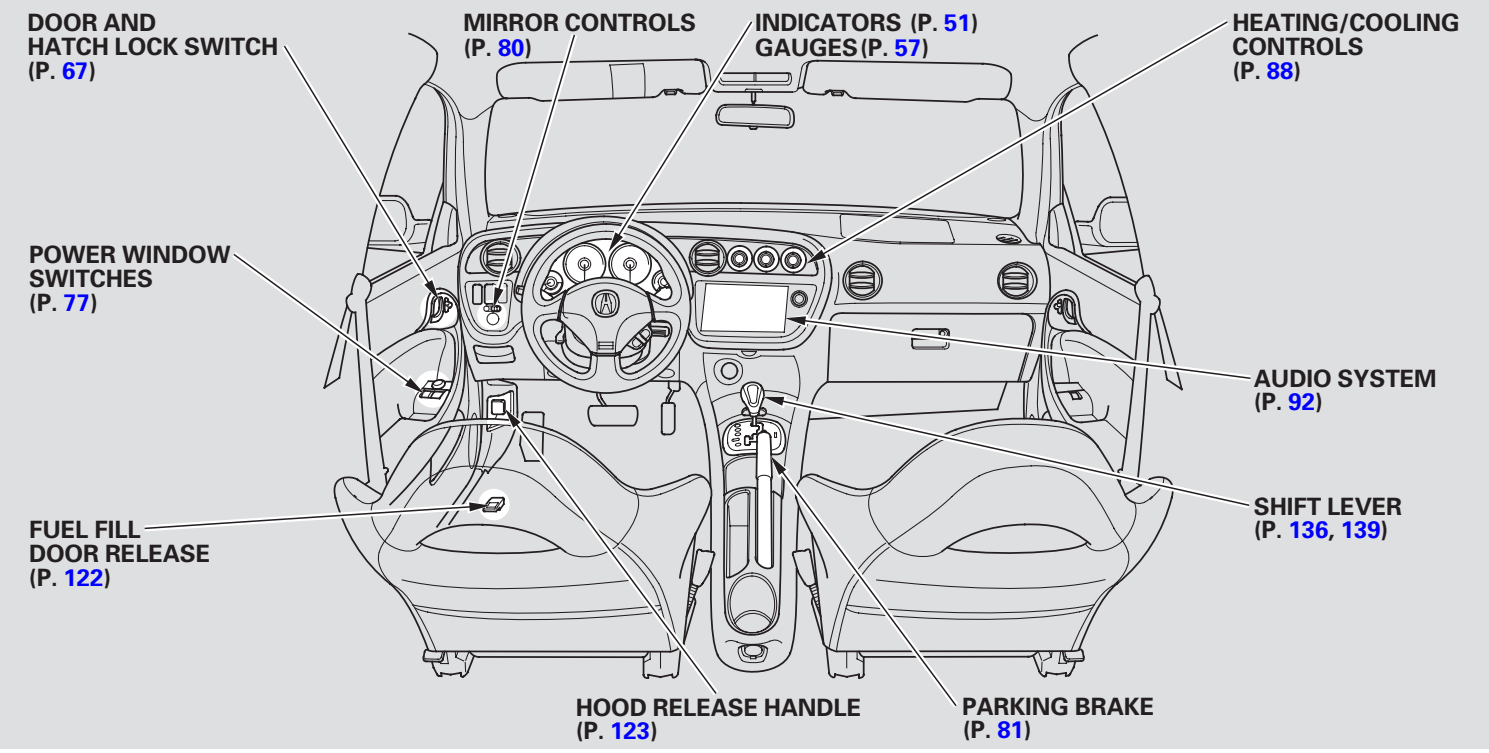

AT model is shown.

Instrument Panel

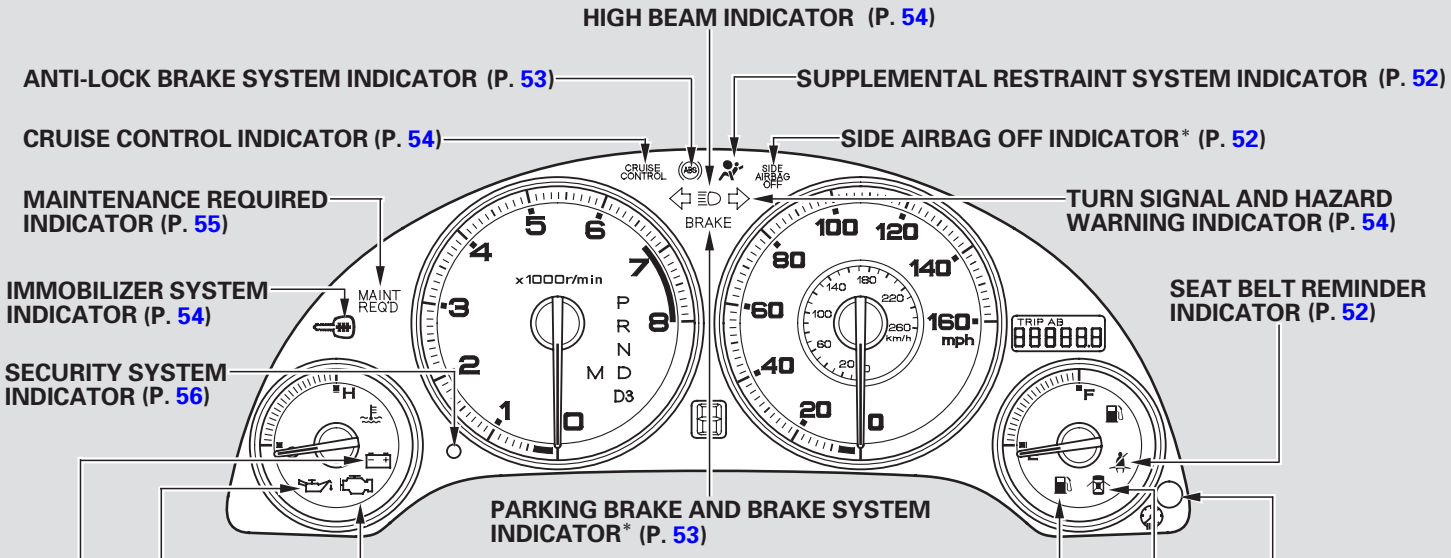

* The U.S. instrument panel is shown. Differences for the Canadian models are noted in the text.

Instrument Panel Indicators

The instrument panel has many indicators to give you important information about your vehicle.

Seat Belt Reminder Indicator

This indicator comes on when you turn the ignition switch to ON (II). It reminds you and your passengers to fasten your seat belts. A beeper also sounds if you have not fastened your seat belt.

If you do not fasten your seat belt, the beeper will stop after a few seconds but the indicator stays on until you do. Both the indicator and the beeper stay off if you fasten your seat belt before turning on the ignition.

Supplemental Restraint System Indicator

This indicator comes on when you turn the ignition switch to ON (II). If it comes on at any other time, it indicates a potential problem with your front airbags. This indicator will also alert you to a potential problem with your side airbags, passenger's side airbag automatic cutoff system, or automatic seat belt tensioners. For more information, see page 26 .

U.S. Canada

Side Airbag Off Indicator

This indicator comes on when you turn the ignition switch to ON (II). If it comes on at any other time, it indicates that the passenger's side airbag has automatically shut off. For more information, see page 27 .

Instrument Panel Indicators

U.S. BRAKE | Canada

Parking Brake and Brake System Indicator

This indicator has two functions:

1. It comes on when you turn the ignition switch to ON (II). It is a reminder to check the parking brake. Driving with the parking brake not fully released can damage the brakes and tires.

2. If it remains lit after you fully release the parking brake while the engine is running, or if it comes on while driving, there could be a problem with the brake system. For more information, see page 206 .

Anti-lock Brake System (ABS) Indicator

This indicator normally comes on for a few seconds when you turn the ignition switch to ON (II), and when the ignition switch is turned to START (III). If it comes on at any other time, there is a problem with the ABS. If this happens, have your vehicle checked at a dealer. With this on, your vehicle still has normal braking ability but no anti-lock brakes. For more information, see page 147 .

Charging System Indicator

If this indicator comes on when the engine is running, the battery is not being charged. For more information, see page 204 .

Low Oil Pressure Indicator

The engine can be severely damaged if this indicator flashes or stays on when the engine is running. For more information, see page 204 .

Malfunction Indicator Lamp

See page 205 .

Instrument Panel Indicators

Turn Signal and Hazard Warning Indicators

The left or right turn signal indicator blinks when you signal a lane change or turn. If the indicator does not blink or blinks rapidly, it usually means one of the turn signal bulbs is burned out (see page 174). Replace the bulb as soon as possible, since other drivers cannot see that you are signaling.

When you press on the Hazard Warning button, both turn signal indicators blink. All turn signals on the outside of the vehicle should flash.

Cruise Control Indicator

Only on models equipped with Cruise Control System

This indicator comes on when you set the cruise control. See page 115 for information on operating the cruise control.

Door-open Indicator

This indicator comes on if either door is not closed tightly.

Low Fuel Indicator

This indicator comes on as a reminder that you must refuel soon.

High Beam Indicator

This indicator comes on with the high beam headlights. For more information, see page 61 .

Immobilizer System Indicator

This indicator comes on for a few seconds when you turn the ignition switch to ON (II). It will go off if you have inserted a properly-coded ignition key. If it is not a properly-coded key, the indicator will blink and the engine will not start (see page 65).

This indicator also blinks several times when you turn the ignition switch from ON (II) to ACCESSORY (I) or LOCK (0).

Instrument Panel Indicators

DRL "Daytime Running Lights" Indicator

Canadian models only

This indicator comes on when you turn the ignition switch to ON (II) with the headlight switch off and the parking brake set. It should go off if you turn on the headlights or release the parking brake. If it comes on at any other time, it means there is a problem with the DRL. There may also be a problem with the high beam headlights.

Washer Level Indicator

Canadian models only

This indicator comes on when the washer fluid level is low. Add washer fluid when you see this indicator come on (see page 167).

MAINT REQ'D Maintenance Required Indicator

This indicator reminds you that it is time to take your vehicle in for scheduled maintenance.

Refer to the Maintenance Schedules for Normal and Severe Driving Conditions on pages 157 and 158.

For the first 8,000 miles (12,800 km) after the Maintenance Required Indicator is reset, it will come on for 2 seconds when you turn the ignition switch to ON (II).

Between 8,000 miles (12,800 km) and 10,000 miles (16,000 km), it will come on for 2 seconds when you first turn the ignition switch to ON (II), and then flash for 10 seconds.

Instrument Panel Indicators

If you exceed 10,000 miles (16,000 km) without having the scheduled maintenance performed, this indicator will remain on as a constant reminder.

Your dealer will reset this indicator after completing the scheduled maintenance. If this maintenance is done by someone other than your dealer, reset the indicator as follows.

1. Turn off the engine.

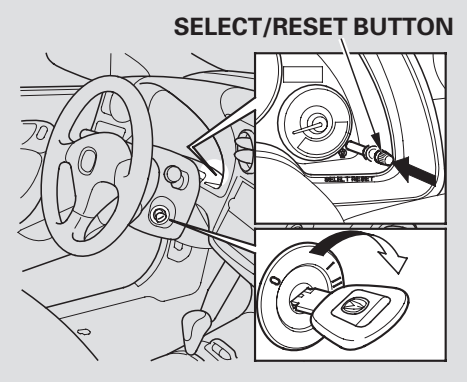

2. Press and hold the select/reset button in the instrument panel, then turn the ignition switch to ON (II).

3. Hold the button for about 10 seconds until the indicator goes off.

Security System Indicator

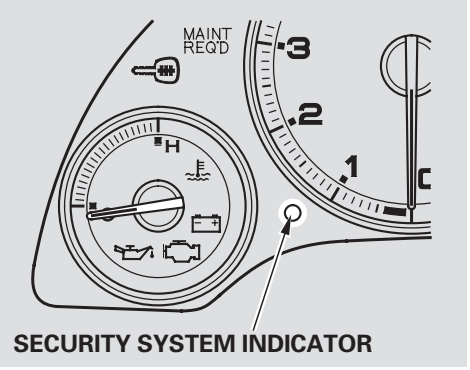

This indicator comes on when the security system is set. See page 114 for more information on the security system.

Gauges

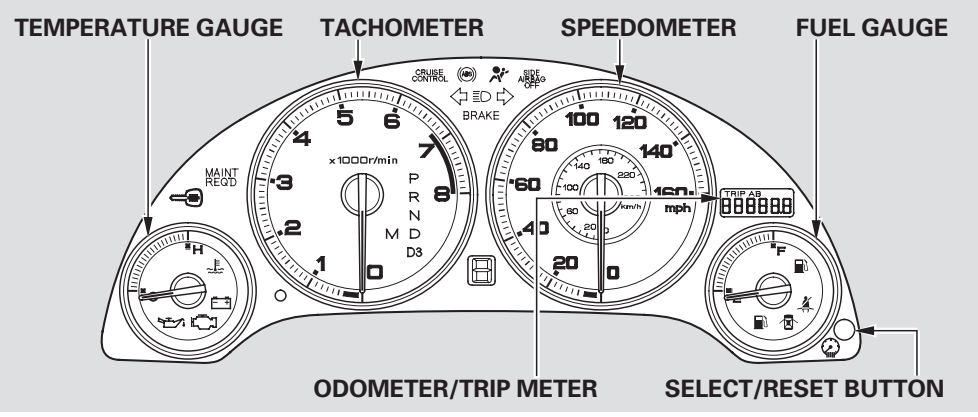

Odometer

The odometer shows the total distance your vehicle has been driven. It measures miles in U.S. models and kilometers in Canadian models.
It is illegal under U.S. federal law and Canadian provincial regulations to disconnect, reset, or alter the odometer with the intent to change the number of miles or kilometers indicated.

Trip Meter

This meter shows the number of miles (U.S.) or kilometers (Canada) driven since you last reset it.

There are two trip meters: Trip A and Trip B. The odometer and the two trip meters use the same display. Switch between these displays and the odometer by pressing the Select/Reset button repeatedly. Each trip meter works independently, so you can keep track of two different distances.

To reset a trip meter, display it, and then press and hold the Select/Reset button until the number resets to "0.0."

Gauges

Fuel Gauge

This shows how much fuel you have. It may show slightly more or less than the actual amount. The needle returns to the bottom after you turn off the ignition.

NOTICE

Avoid driving with an extremely low fuel level. Running out of fuel could cause the engine to misfire, damaging the catalytic converter.

Temperature Gauge

This shows the temperature of the engine's coolant. During normal operation, the pointer should rise from the bottom white mark to about the middle of the gauge. In severe driving conditions, such as very hot weather or a long period of uphill driving, the pointer may rise to near the upper white mark. If it reaches the red (Hot) mark, pull safely to the side of the road. Turn to page 202 for instructions and precautions on checking the engine's cooling system.

Check Fuel Cap Indicator

(Odometer/trip meter message)

If your fuel cap is loose or missing, a "CHECK FUEL CAP" message appears as text in the odometer/trip meter display after you start the engine. Turn the engine off and confirm the fuel cap is installed. If it is, loosen the cap, then retighten it at least 3 clicks. When you restart the engine, the message appears again. To clear the message, press and hold the select/reset button until the message is replaced the odometer/trip meter display.

If the system still detects a loose or missing fuel cap, the Malfunction Indicator Lamp (MIL) comes on. Turn the engine off and check or retighten the fuel cap at least 3 clicks. The MIL goes out after 3 days of normal driving once the cap is tightened or replaced. If it does not go out, have your dealer inspect the vehicle. For more information, see page 205 .

Controls Near the Steering Wheel

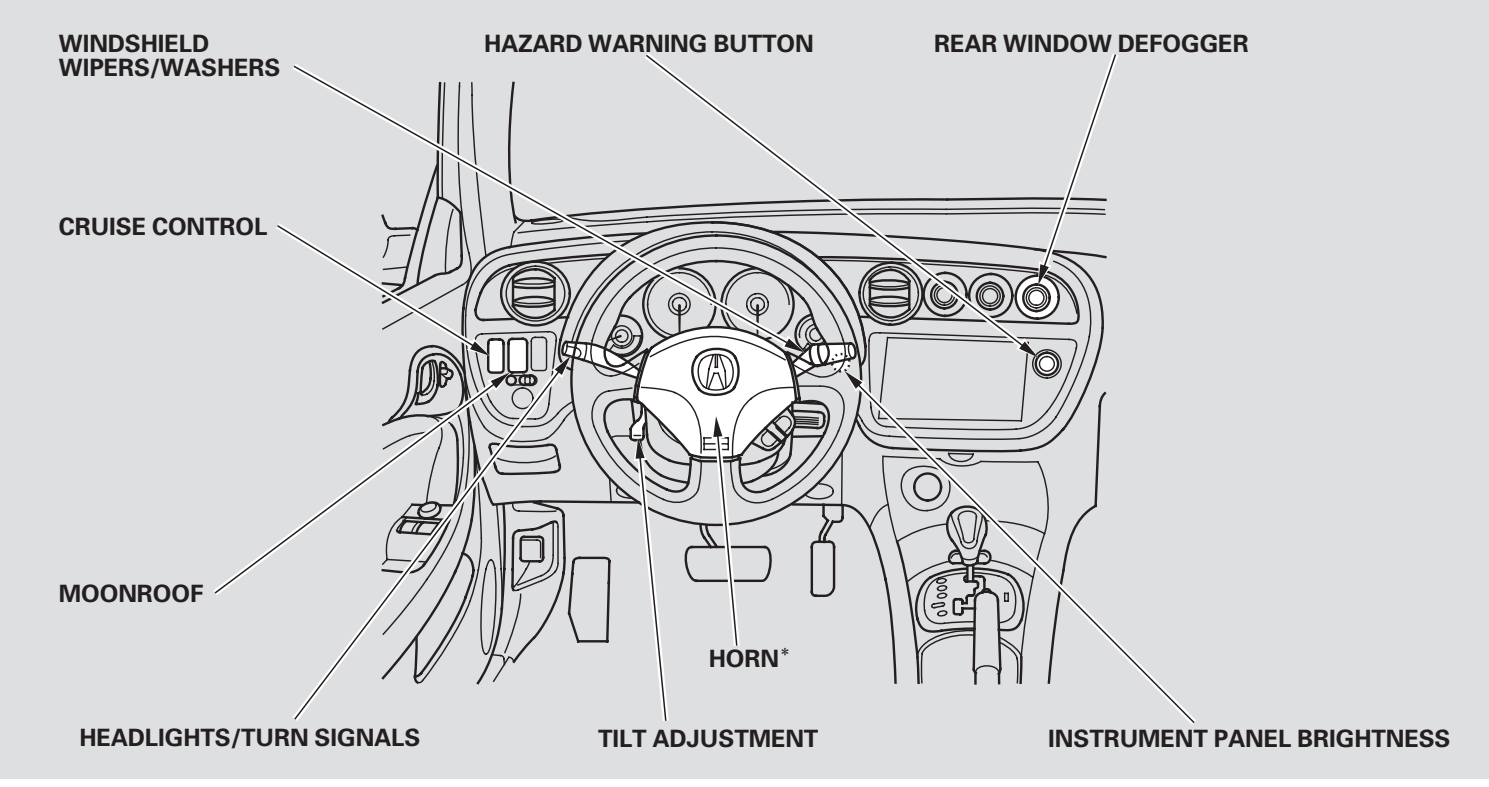

* : To use the horn, press the center pad on the steering wheel.

Windshield Wipers and Washers

Windshield Wiper

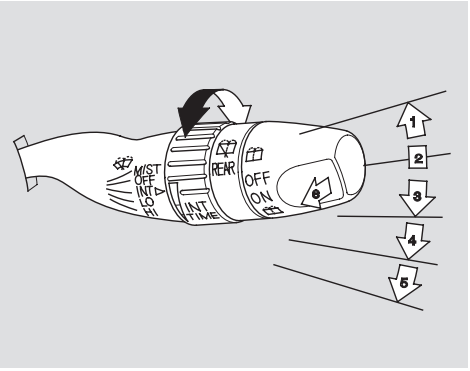

1. MIST
2. OFF
3. INT — Intermittent
4. LO — Low speed
5. HI — High speed
6. Windshield Washers

Push the right lever up or down to select a position.

MIST — The wipers run at high speed until you release the lever.

OFF — The wipers are not activated.

INT — The length of the wiper interval is varied automatically according to the vehicle's speed. Vary the delay by turning the INT TIME ring. If you turn it to the shortest delay, the wipers will change to low speed operation when the vehicle speed exceeds 12 mph (20 km/h).

LO — The wipers run at low speed.

HI — The wipers run at high speed.

Windshield Washers — Pull the wiper control lever toward you and hold it. The washers spray until you release the lever. The wipers run at low speed, then complete one more sweep after you release the lever.

Rear Window Wiper and Washer

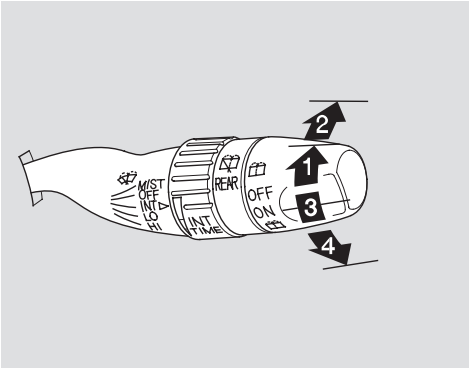

1. Rotate the switch clockwise to turn the rear window wiper ON.
2. Hold past ON to turn the window wiper on and the window washer to spray.
3. OFF
4. Rotate counterclockwise to turn the window wiper on and the window washer to spray.

Turn Signal and Headlights

Turn Signal and Headlights

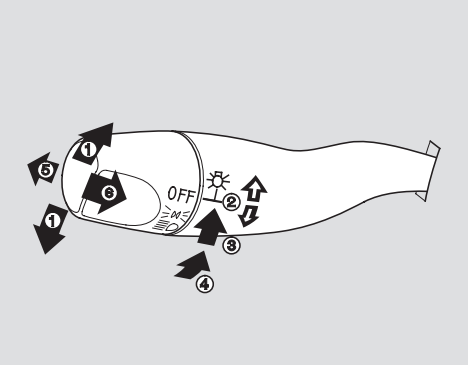

1. Turn Signal
2. Off
3. Parking and interior lights
4. Headlight on
5. High beams
6. Flash high beams

Turn Signal — Push down on the left lever to signal a left turn and up to signal a right turn. To signal a lane change, push lightly on the lever and hold it. The lever will return to center when you release it or complete a turn.

Headlights On — Turning the switch to the " " position turns on the parking lights, taillights, instrument panel lights, side-marker lights, and rear license plate lights.

Turning the switch to the " " position turns on the headlights. If you leave the lights on with the key removed from the ignition switch, you will hear a reminder beeper when you open the driver's door.

High Beams — To turn on the high beams, push the left lever forward until it clicks. The blue high beam indicator will come on (see page 54). Pull it back to return to low beams. To flash the high beams, pull the lever back lightly, then release it. The high beams will stay on as long as you hold the lever back.

Daytime Running Lights

Canadian model only

With the headlight switch off, the high beam headlights come on with reduced brightness when you turn the ignition switch to ON (II) and release the parking brake. They remain on until you turn the ignition switch off, even if you set the parking brake.

The headlights revert to normal operation when you turn them on with the switch.

Instrument Panel Brightness, Hazard Warning Button, Rear Window Defogger

Instrument Panel Brightness

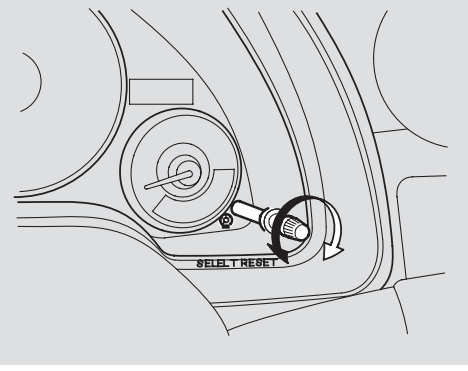

The knob on the instrument panel controls the brightness of the instrument panel. Turn the knob to adjust the brightness.

Hazard Warning Button

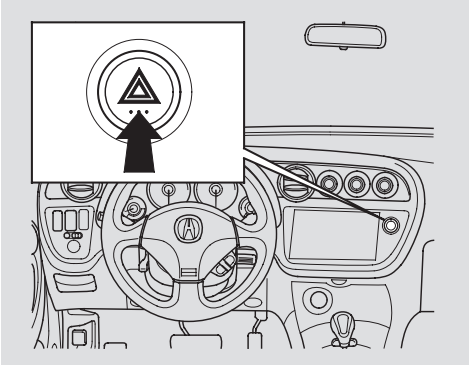

Push the red button to turn on the hazard warning lights (four-way flashers). This causes all four outside turn signals and both indicators in the instrument panel to flash. Use the hazard warning lights if you need to park in a dangerous area near heavy traffic, or if your vehicle is disabled.

Rear Window Defogger

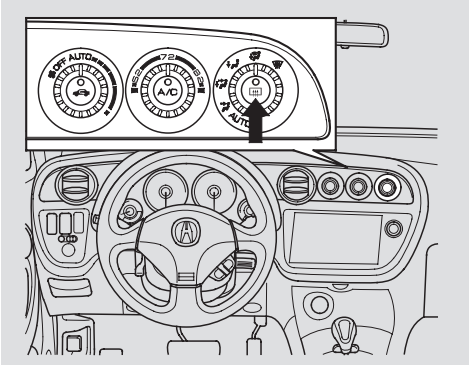

The rear window defogger will clear fog, frost, and thin ice from the window. Push the defogger button to turn it on and off. The indicator in the button comes on to show the defogger is on. If you do not turn it off, the defogger will shut itself off after about 25 minutes. It also shuts off when you turn off the ignition switch. You have to turn it on again when you restart the vehicle.

Rear Window Defogger, Steering Wheel Adjustment

Make sure the rear window is clear and you have good visibility before starting to drive.

The defogger wires on the inside of the rear window can be accidentally damaged. When cleaning the glass, always wipe side-to-side.

Steering Wheel Adjustment

Make any steering wheel adjustment before you start driving.

⚠ WARNING

Adjusting the steering wheel position while driving may cause you to lose control of the vehicle and be seriously injured in a crash.

Adjust the steering wheel only when the vehicle is stopped.

1. Push the lever under the steering column all the way down.

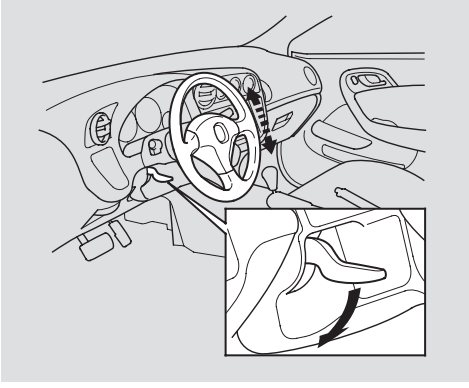

2. Move the steering wheel so it points to your chest, not toward your face. Make sure you can see the instrument panel gauges and indicators.

3. Push the lever up to lock the steering wheel in position.

4. Make sure you have securely locked the steering wheel in place by trying to move it up and down.

Keys and Locks

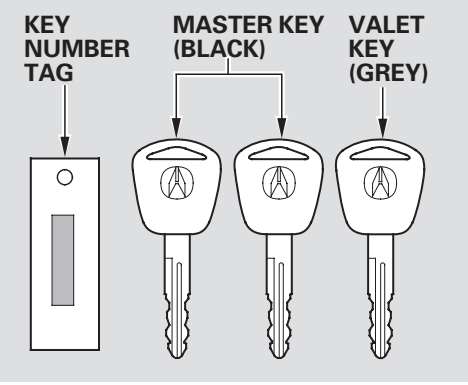

The master key fits all the locks on your vehicle.

The valet key works only in the ignition and the door locks. You can keep the glove box locked when you leave your vehicle and the valet key at a parking facility.

You should have received a key number tag with your keys. You will need this key number if you ever have to get a key replaced. Use only an Acura-approved key blank.

These keys contain electronic circuits that are activated by the Immobilizer System. They will not work to start the engine if the circuits are damaged.

- Protect the keys from direct sunlight, high temperature, and high humidity.
- Do not drop the keys or set heavy objects on them.
- Keep the keys away from liquids. If they get wet, dry them immediately with a soft cloth.

The keys do not contain batteries. Do not try to take them apart.

Immobilizer System

The Immobilizer System protects your vehicle from theft. If an improperly-coded key (or other device) is used, the engine will not start.

When you turn the ignition switch to ON (II), the Immobilizer System indicator should come on for a few seconds, then go out. If the indicator starts to blink, it means the system does not recognize the coding of the key. Turn the ignition switch to LOCK (0), remove the key, reinsert it, and turn the switch to ON (II) again.

The system may not recognize your key's coding if another immobilizer key or other metal object (i.e. key fob) is near the ignition switch when you insert the key.

If the system repeatedly does not recognize the coding of your key, contact your dealer.

Do not attempt to alter this system or add other devices to it. Electrical problems could result that may make your vehicle undriveable.

If you lose your key and you cannot start the engine, contact your dealer.

As required by the FCC:
This device complies with Part 15 of the FCC rules. Operation is subject to the following two conditions: (1) This device may not cause harmful interference, and (2) this device must accept any interference received, including interference that may cause undesired operation.

Changes or modifications not expressly approved by the party responsible for compliance could void the user's authority to operate the equipment.

This device complies with Industry Canada Standard RSS-210.
Operation is subject to the following two conditions: (1) this device may not cause interference, and (2) this device must accept any interference that may cause undesired operation of the device.

Ignition Switch

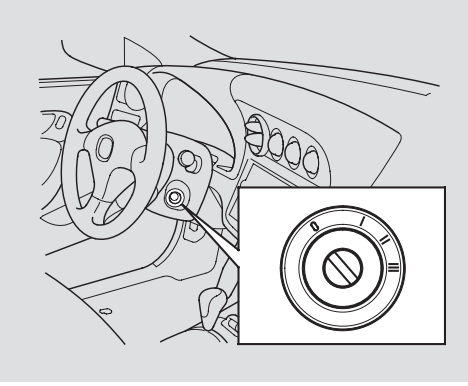

The ignition switch has four positions: LOCK (0), ACCESSORY (I), ON (II), and START (III).

LOCK (0) — You can insert or remove the key only in this position. To turn the key, you must push the key in slightly. If your vehicle has an automatic transmission, the shift lever must also be in park.

If the front wheels are turned, the anti-theft lock may make it difficult to turn the key. Firmly turn the steering wheel to the left or right as you turn the key.

ACCESSORY (I) — You can operate the audio system and the accessory power sockets in this position.

ON (II) — This is the normal key position when driving. Several of the indicators on the instrument panel come on as a test when you turn the ignition switch from ACCESSORY (I) to ON (II).

START (III) — Use this position only to start the engine. The switch returns to ON (II) when you let go of the key.

You will hear a reminder beeper if you leave the key in the ignition switch in the LOCK (0) or ACCESSORY (I) position and open the driver's door. Remove the key to turn off the beeper.

If your vehicle has an automatic transmission, the shift lever must be in Park before you can remove the key from the ignition switch.

⚠ WARNING

Removing the key from the ignition switch while driving locks the steering. This can cause you to lose control of the vehicle.

Remove the key from the ignition switch only when parked.

Door Locks

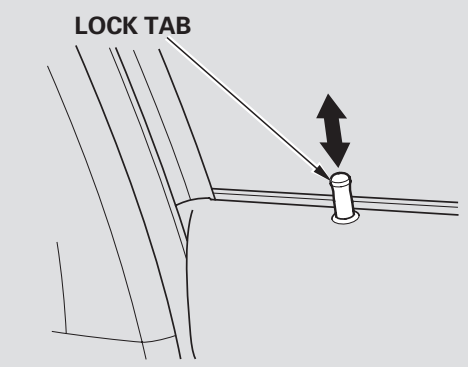

Each door has a lock tab at the top of the door. When you push down the lock tab on the driver's door, both doors and the hatch lock. The lock tab on the passenger's door locks and unlocks only that door. Pulling up on the driver's door lock tab only unlocks the driver's door.

To unlock the driver's door from the outside, turn the key and release it. If you turn and hold it, both doors and the hatch unlock. Both doors and the hatch unlock when you use the key in the passenger's door.

Power Door/Hatch Locks

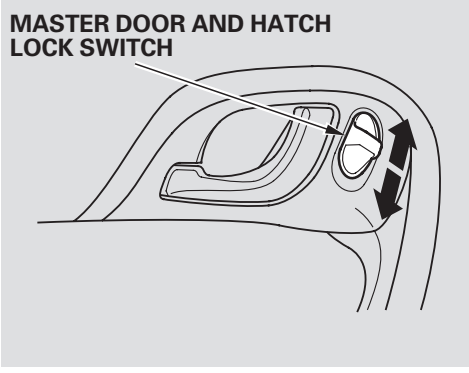

To lock both doors and the hatch, press the master door lock switch on either door, press the lock tab down on the driver's door, or use the key on the outside lock.

Pulling up on either master door lock switch will unlock both doors and the hatch.

Door Locks

Hatch

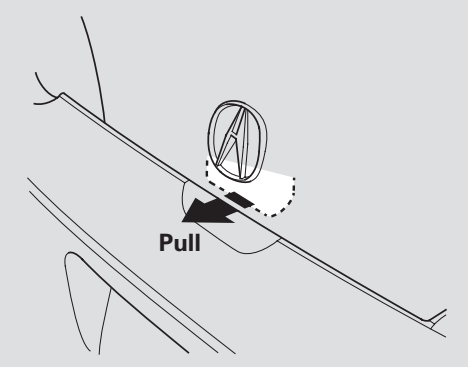

To open the hatch, pull the handle, then lift up the hatch.
To close the hatch, press down on the back edge.

The hatch will not lock or unlock when the battery is disconnected.

See page 129 for cargo loading and weight limit information. Keep the hatch closed at all times while driving to avoid damaging the hatch and to prevent exhaust gas from getting into the interior. See **Carbon Monoxide Hazard** on page 45 .

Remote Transmitter

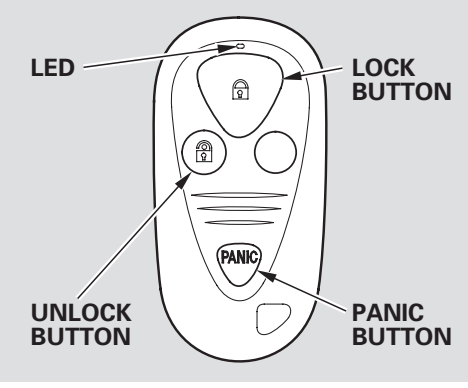

LOCK — Press this button to lock both doors and the hatch. You cannot lock the doors or the hatch if either door or the hatch is not fully closed or if the key is in the ignition switch.

UNLOCK — Press this button once to unlock the driver's door. Push it twice to unlock the passenger's door and the hatch.
Some exterior lights will flash each time you press the button.

The interior lights will come on when you press the UNLOCK button. If you do not open either door or the hatch within 30 seconds, the lights fade out. If you relock the doors and the hatch with the remote transmitter before 30 seconds have elapsed, the light will go off immediately;

If you do not open either door or the hatch within 30 seconds, they will automatically relock and the security system sets.

PANIC — Press this button for about 1 second to attract attention; the horn will sound and the exterior lights will flash for about 30 seconds. To cancel panic mode, press any other button on the remote transmitter, or turn the ignition switch to ON (II).

Remote Transmitter Care

- Avoid dropping or throwing the transmitter.
- Protect the transmitter from extreme temperature.
- Do not immerse the transmitter in any liquid.
- If you lose a transmitter, the replacement needs to be reprogrammed by your dealer.

CONTINUED

Remote Transmitter

Replacing the Transmitter Battery

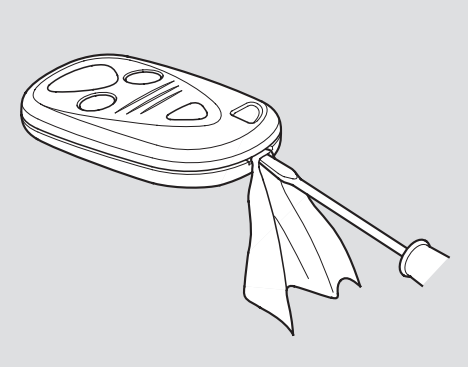

If it takes several pushes on the button to lock or unlock the doors and the hatch, replace the battery as soon as possible.
Battery type: CR2025

To replace the battery, place a cloth on the edge of the transmitter and remove the upper half by carefully prying on the edge with a small flat-tip screwdriver.

Insert a new battery with the + side facing up.

Snap the two halves of the transmitter case back together.

As required by the FCC:
This device complies with Part 15 of the FCC rules. Operation is subject to the following two conditions: (1) This device may not cause harmful interference, and (2) this device must accept any interference received, including interference that may cause undesired operation.

Changes or modifications not expressly approved by the party responsible for compliance could void the user's authority to operate the equipment.

This device complies with Industry Canada Standard RSS-210.
Operation is subject to the following two conditions: (1) this device may not cause interference, and (2) this device must accept any interference that may cause undesired operation of the device.

Front Seat Adjustments

See pages 13 – 15 for important safety information and warnings about how to properly position seats and seat-backs.

Make all seat adjustments before you start driving.

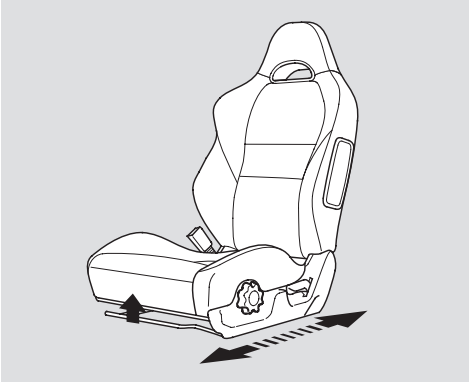

To adjust the seat forward and backward, pull up on the bar under the seat cushion's front edge. Then try to move the seat to make sure it is locked in position.

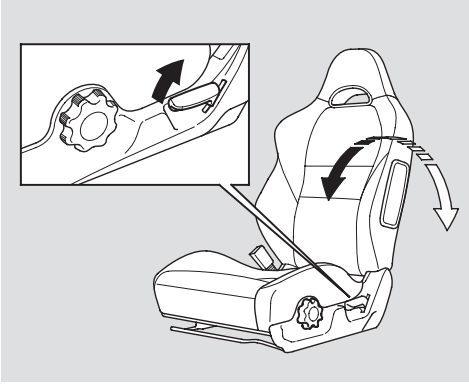

To change the seat-back angle, pull up on the lever on the outside of the seat bottom.

Seats

Driver's Seat Height Adjustment

U.S.: All models
Canada: Premium and Type-S models only

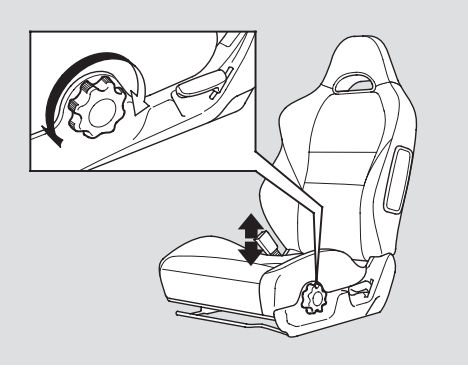

The height of your driver's seat is adjustable. Turn the dial on the outside of the seat cushion to change the height of the seat bottom.

Driver's Lumbar Support

U.S.: All models
Canada: Premium and Type-S models only

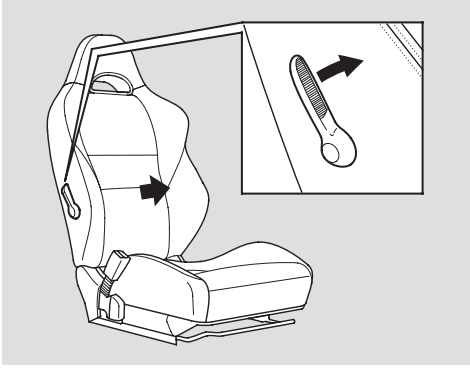

To change the lumbar support, move the lever on the right side of the seat-back forward or backward. Keep moving the lever forward or backward until you find a suitable position.

Rear Seat Access

To get into the back seat, pull up on the seat-back adjustment lever.

To get out from the rear seat on the passenger's side, push down on the release lever at the base of the seat-back. The seat-back will tilt forward, and the seat will slide forward.

Folding Rear Seat

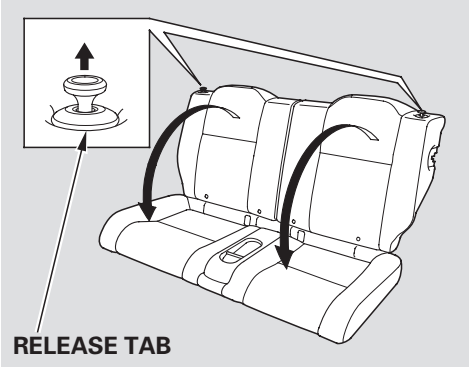

The back of the rear seat folds down to give you more cargo space. Each side folds down separately. With only half the seat folded, you can still carry a passenger in the back seat.

To unlatch either side of the seat-back, pull up on the release tab. Move the seat belt out of the way and fold the seat-back down.

To lock the seat-back upright, push the seat-back firmly against its latch. Tug on the seat-back to make sure it is latched.

Do not put any heavy items on the seat-back when it is folded.

Make sure all items in the cargo area are secured. Loose items can fly forward and cause injury if you have to brake hard. See **Carrying Cargo** on page 129 .

Seat Heaters

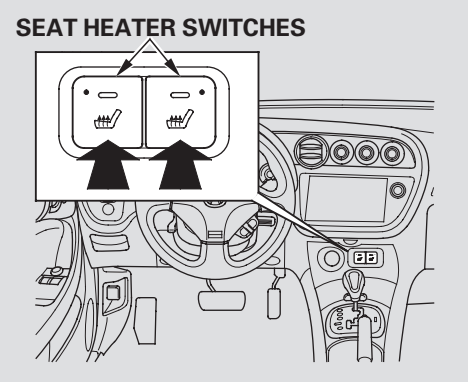

On Canada Type-S and Premium model with leather seats

Both front seats are equipped with seat heaters. The ignition switch must be in the ON (II) position to use them. Push the heater switch to turn the power on or off. The indicators will come on and remain on while the heaters are on.

Do not use the seat heaters when the engine is off or when idling for a long period of time. They can drain the battery, making your vehicle hard to start.

Cargo Area Cover

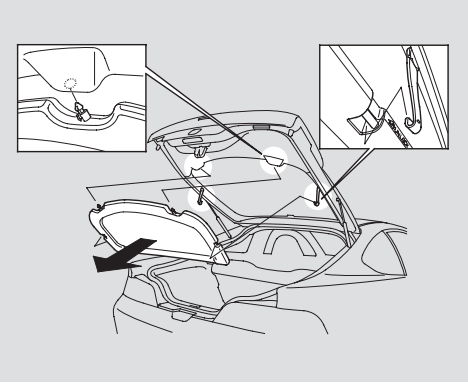

The cargo area cover may be removed to give you more cargo room.

1. Open the hatch.

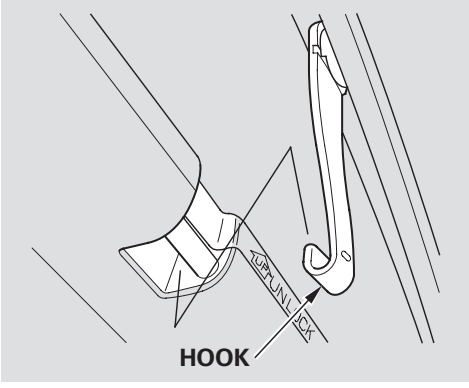

2. Push up on the sides of the cargo area cover to release the cover from the hooks.

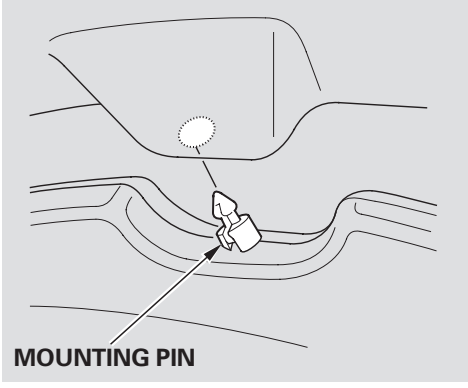

3. Pull down on the cover to remove the mounting pins from the holes in the hatch lining.

CONTINUED

Cargo Area Cover

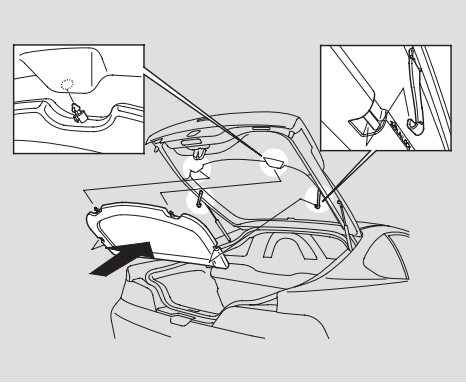

Reverse this procedure to install the cargo area cover.

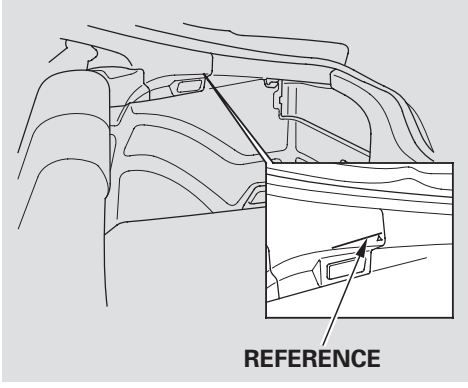

There is a reference line on the cargo area side panel. To avoid damaging the cargo cover, remove the cover if the cargo goes above that line.

Do not place items on the cargo area cover, or stack objects higher than the top of the back seat. They could block your view and be thrown about the vehicle during a crash or sudden stop.

Power Windows

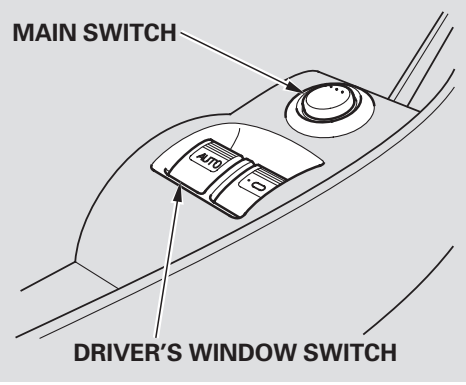

Turn the ignition switch to ON (II) to raise or lower either window. To open the window, push the switch down and hold it. Release the switch when you want the window to stop. Pull back on the switch and hold it to close the window.

⚠WARNING

Closing a power window on someone's hands or fingers can cause serious injury.

Make sure your passengers are away from the windows before closing them.

AUTO — To open/close the driver's window, push the window switch firmly down or up to the second detent, and release it. The window will automatically go up or down all the way. To stop the window, pull/push on the window switch briefly.

If the MAIN switch is OFF, the passenger window cannot be raised or lowered. Keep the MAIN switch off when you have children in the vehicle so they do not injure themselves by operating the window unintentionally.

CONTINUED

Power Windows

AUTO REVERSE — If the driver's window senses any obstacle while it is closing automatically, it will reverse direction and then stop. To close the window, remove the obstacle, then use the window switch again.

Auto reverse stops sensing when the window is almost closed. You should always check that all passengers and objects are away from the window before closing it.

If your vehicle's battery is disconnected or goes dead, or the driver's window fuse is removed, the AUTO function will be disabled. The power window system needs to be reset after reconnecting the battery or installing the fuse.

1. Start the engine. Push down and hold the driver's window switch until the window is fully open.

2. Pull and hold the driver's window switch to close the window completely, then hold the switch for a second or two more.

If the power windows do not operate properly after resetting, have your vehicle checked by your dealer.

Moonroof, Mirrors

Moonroof

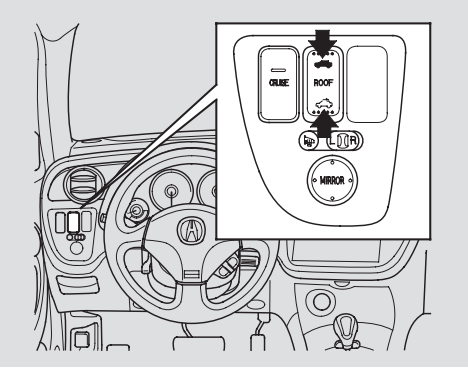

U.S.: All models
Canada: Premium and Type-S models only

Use the switch on the dashboard to open and close the moonroof. The ignition switch must be in the ON (II) position. Push and hold the switch to open the moonroof. Release the switch when the moonroof reaches the desired position. To close the moonroof, press and hold the switch.

⚠WARNING

Closing the moonroof on someone's hands or fingers can cause serious injury.

Make sure passengers are clear of the moonroof before closing it.

NOTICE

If you try to open the moonroof in below-freezing temperatures, or when it is covered with snow or ice, you can damage the moonroof panel or motor.

Mirrors

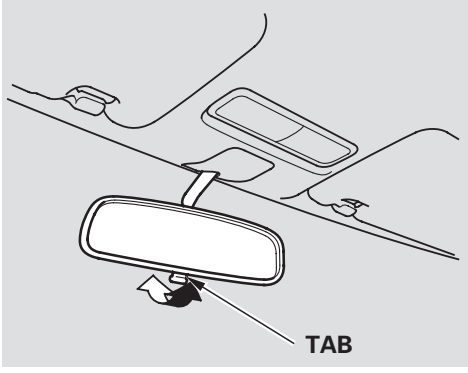

Keep the inside and outside mirrors clean and adjusted for best visibility. Be sure to adjust the mirrors before you start driving.

The inside mirror has day and night positions. The night position reduces glare from headlights behind you. Flip the tab on the bottom edge of the mirror to select the day or night position.

CONTINUED

Mirrors

Adjusting the Power Mirrors

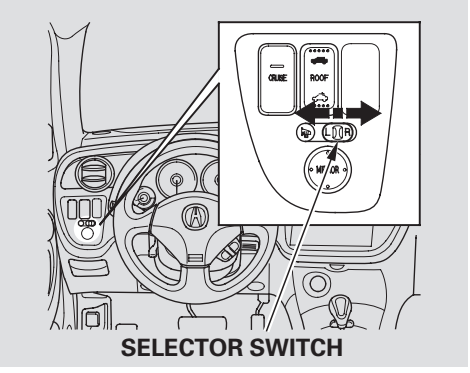

SELECTOR SWITCH

1. Move the selector switch to L (driver's side) or R (passenger's side).

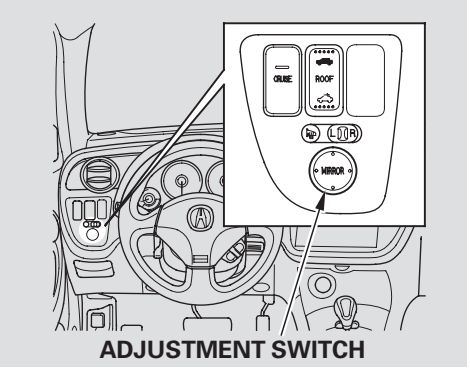

ADJUSTMENT SWITCH

2. Push the appropriate edge of the adjustment switch to move the mirror right, left, up, or down.

3. When you finish, move the selector switch to the center (off) position. This turns off the adjustment switch so you can't move a mirror out of position by accidentally bumping the switch.

Power Mirror Heaters

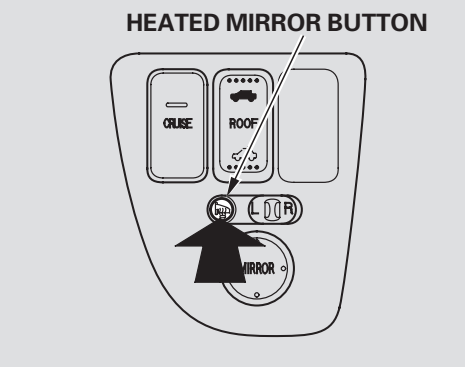

The outside mirrors are heated to remove fog and frost. With the ignition switch in the ON (II) position, turn on the heaters by pressing the button. The indicator in the button comes on as a reminder. Press the button again to turn the heaters off.

Parking Brake

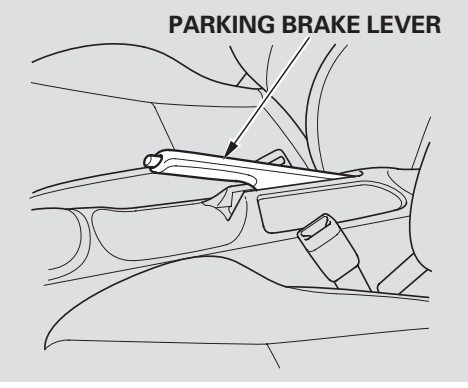

To apply the parking brake, pull the lever up fully. To release it, pull up slightly, push the button, and lower the lever. The parking brake light on the instrument panel should go out when the parking brake is fully released (see page 53).

NOTICE: *Driving the vehicle with the parking brake applied can damage the rear brakes and axles.*

Interior Convenience Items

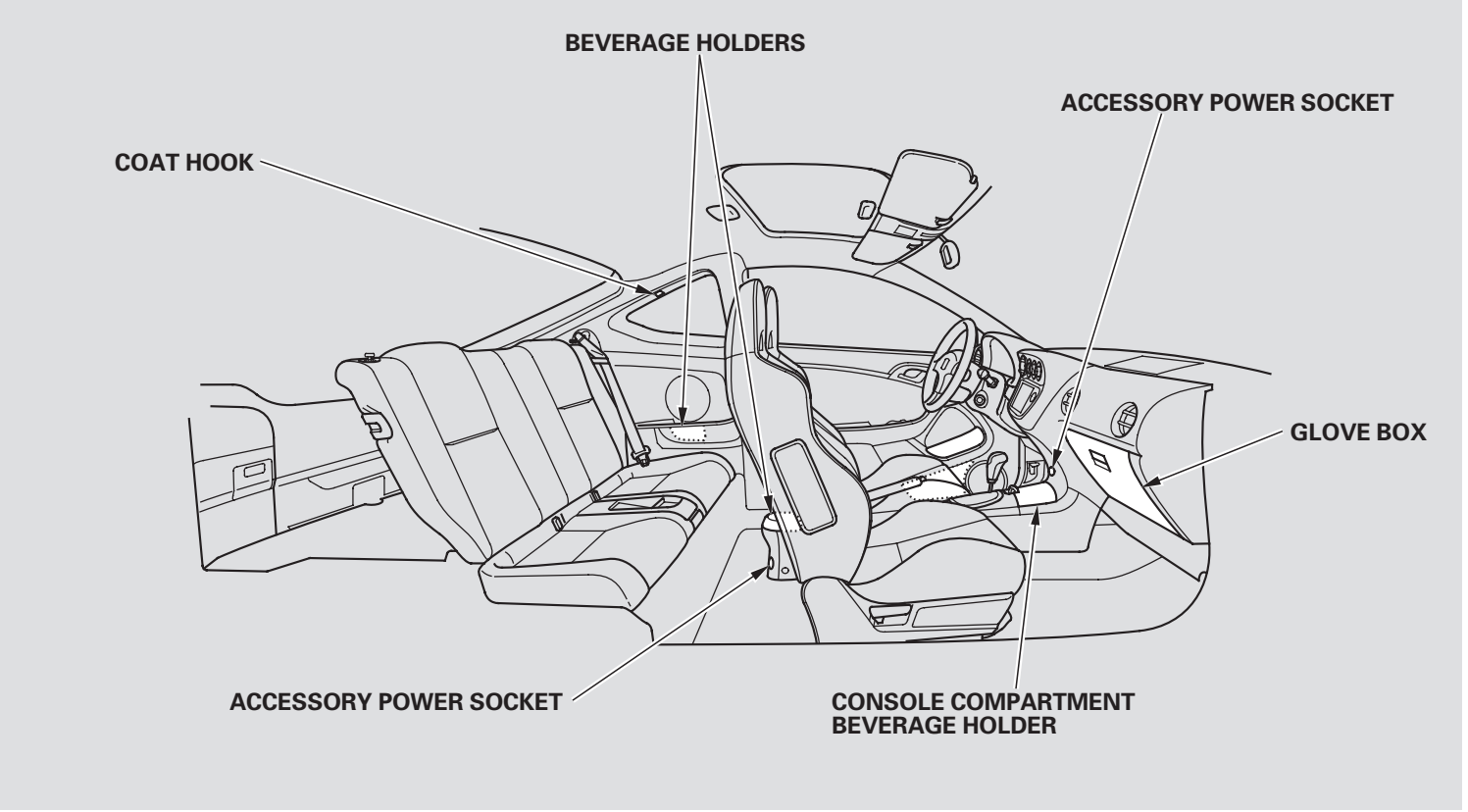

Interior Convenience Items

Beverage Holders

Be careful when you are using the beverage holders. A spilled liquid that is very hot can scald you or your passengers. Spilled liquids can damage the upholstery, carpeting, and electrical components in the interior.

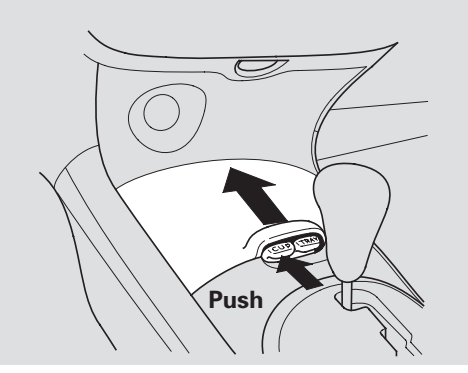

To open the beverage holder, push the left knob and slide the cover forward.

Accessory Power Sockets

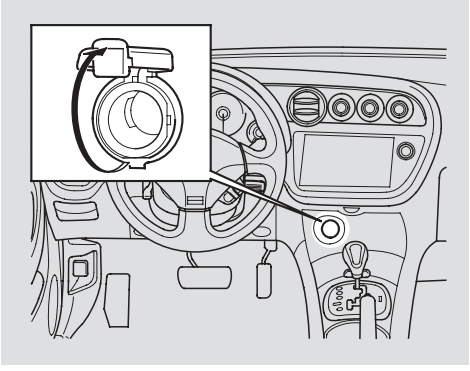

U.S.: Standard on all models
Canada: Rear power socket optional
There are two accessory power sockets, one is located in the front of the center console. The other is located at the rear of the console. To use either power socket, pull up the cover.

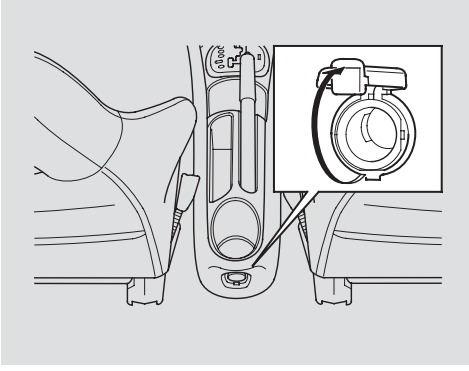

These sockets are intended to supply power for 12 volt DC accessories that are rated 120 watts or less (10 amps).

To power an accessory, the ignition switch must be in the ACCESSORY (I) or ON (II) position.

These sockets will not power an automotive type cigarette lighter element.

Interior Convenience Items

Console Compartment

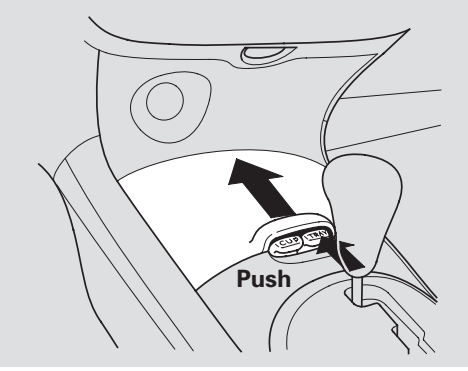

To open the console compartment, push the right knob and slide the cover forward.

Glove Box

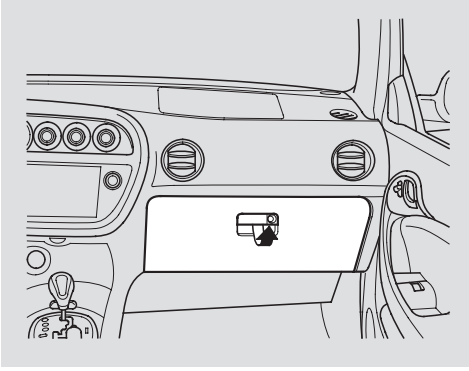

Open the glove box by pulling the bottom of the handle. Close it with a firm push. Lock or unlock the glove box with the master key.

⚠ WARNING

An open glove box can cause serious injury to your passenger in a crash, even if the passenger is wearing the seat belt.

Always keep the glove box closed while driving.

U.S.: All models
Canada: Premium and Type-S models only

The glove box light comes on only when the instrument panel indicators are on.

Interior Convenience Items

Vanity Mirror

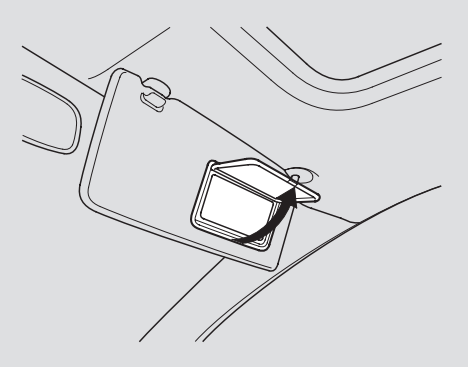

To use a vanity mirror on the back of the sun visor, pull up the cover.

Coat Hook

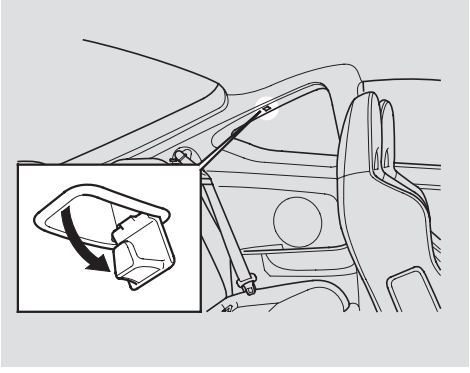

To use this coat hook, rotate the hook down. Close it with a firm push.

Interior Lights

Ceiling Light

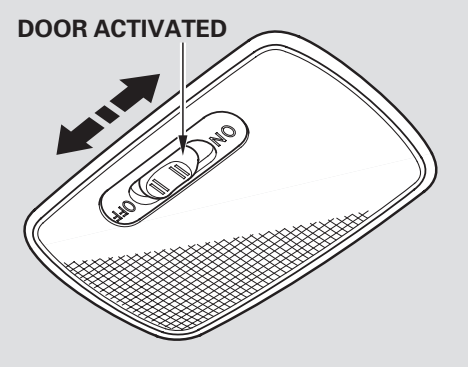

The ceiling light has a three-position switch. In the OFF position, the light does not come on. In the center position, the ceiling light comes on when you open either door. After the doors are closed tightly, the light dims slightly, then fades out in about 30 seconds. In the ON position, the ceiling light stays on continuously.

Spotlights

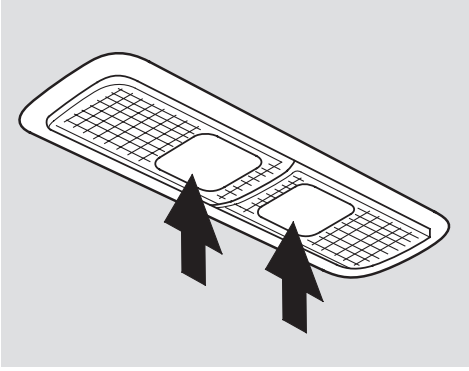

U.S.: All models
Canada: Premium and Type-S models only

Turn on the spotlight by pushing the button next to each light. Push the button again to turn it off. You can use the spotlights at all times.

Cargo Area Light

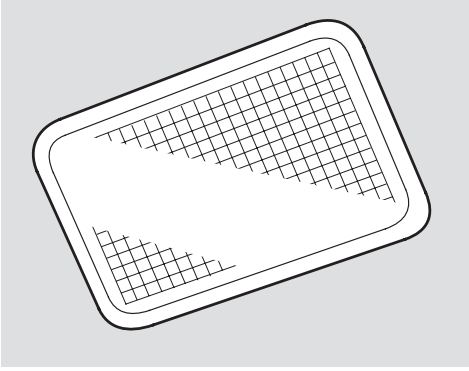

The cargo area light comes on when you open the hatch.

Features

Your vehicle has an anti-theft audio system that requires a code number to enable it.

The security system helps to discourage vandalism and theft of your Honda.

The heating and air conditioning systems in your vehicle provide a comfortable driving environment in all weather conditions.

The standard audio system has many features. This section describes those features and how to use them.

Vents, Heating, and A/C 88
Playing the Radio 92
Radio Reception 96
Playing a Tape 98
Playing a CD 101
CD Player 102
CD Changer 103
Protecting Your CDs 108
CD Player Error Messages 109
CD Changer Error Messages 110
Radio Theft Protection 112
Setting the Clock 113
Security System 114
Cruise Control 115

Vents, Heating, and A/C

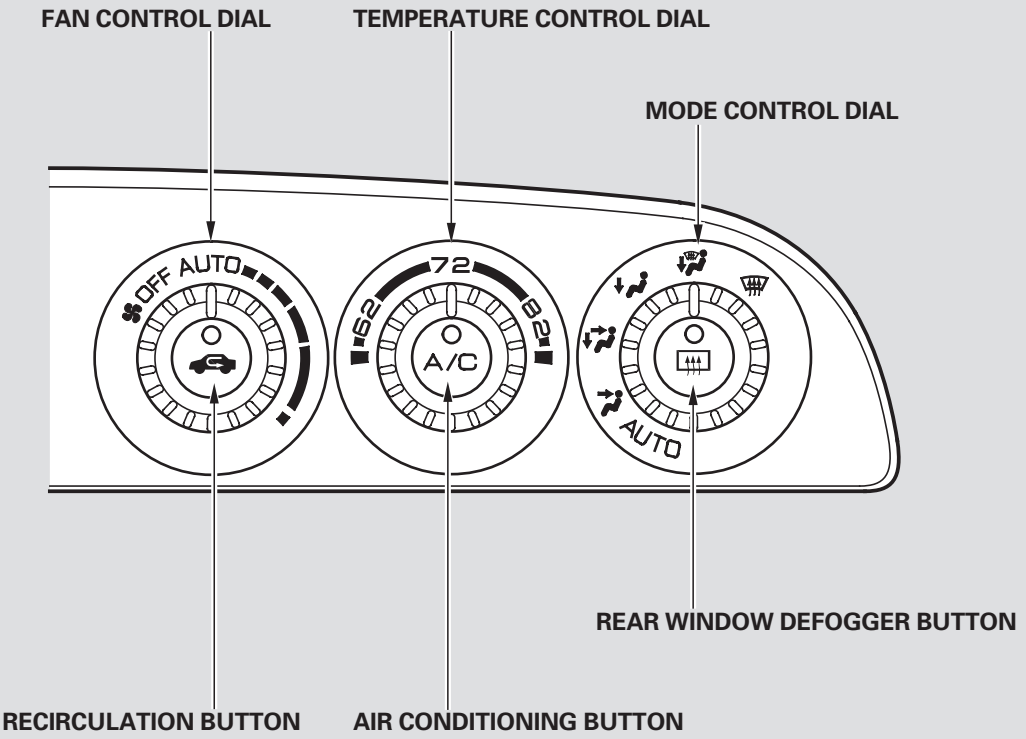

Automatic Operation
To use the heating and cooling system in automatic mode, set the system as follows.

1. Set the fan control dial to AUTO.

2. Set the mode control dial to AUTO.

3. Turn the temperature control dial to the desired temperature.

4. Select Fresh Air mode by pressing the Recirculation button. The indicator in the switch should be off.

5. Turn on the A/C by pressing the button.

To heat or cool the interior faster, select Recirculation mode and set the temperature control dial to the upper or lower limit. The system runs on full cooling or heating only. It does not regulate the interior temperature. When the temperature is set between the lower and upper limits, the system regulates the interior temperature to the set value.

Turning the fan control dial to OFF shuts the heating and cooling system completely off. Keep the system completely off only for short periods. To keep stale air and mustiness from collecting, you should have the fan running at all times.

Manual Operation
You can manually set the system controls for ventilation, air conditioning, heating, air flow direction, and fan speed in various combinations.

Air Conditioning Button
Pressing the A/C button turns the air conditioning ON and OFF. The indicator in the button comes on when the A/C is ON.

When you turn the A/C off, the system cannot regulate the inside temperature if you set the dial below the outside air temperature.
With A/C on, use the temperature control dial to adjust the temperature of the air flow to a comfortable setting.

Air conditioning also removes moisture from the air as it operates. You can use it to defog the windows quickly in cool or damp weather. Used in combination with the heater, it also makes the interior warm and dry.

CONTINUED

Vents, Heating, and A/C

Air conditioning places an extra load on the engine. Watch the engine coolant temperature gauge (see page 58) when using the A/C in heavy traffic or driving up long hills. If it moves near the red zone, turn off the air conditioning until the gauge reads normally.

Recirculation Button

This button controls the source of air going into the system. When the indicator in this button is on, the system is recirculating the interior air (Recirculation mode). When the indicator is off, fresh air is brought in from outside the vehicle (Fresh Air mode). Push the button to change between recirculated and fresh air.

Use Recirculation mode to heat or cool the interior more quickly, or to keep out smoke and dust. Leaving the system in the Recirculation mode with the A/C off can cause the windows to fog up. Switch to Fresh Air mode as soon as the interior reaches a comfortable temperature or the outside smoky, dusty condition clears.

Fan Speed

You can manually select the fan speed by turning the fan speed control dial. Turning this dial clockwise increases the fan speed, which increases air flow.
When the dial is set to AUTO, the system controls the fan speed automatically.

Mode Control Dial

Use this dial to select the direction of airflow coming out of the system. Some air will come out of the side vents in all modes.

In AUTO mode, the system controls the air flow direction automatically between the dashboard vents and the floor vents.

The main air flow comes out of the dashboard vents.

Airflow is divided between the vents in the dashboard and the floor vents.

The main air flow is directed to the floor vents.

The main air flow is divided between the floor vents and defroster vents at the base of the windshield.

Vents, Heating, and A/C

The main air flow is directed to the windshield for faster defrosting or defogging. To defrost or defog more quickly, turn the temperature control dial to maximum. Select , and set the fan speed to high.

When you select or , the A/C turns on automatically to help dehumidify the air and defog the windshield. When you select another mode, the A/C stays on. If you do not want to use the A/C in that mode, press the button to turn it off.

If there is actual frost on the windows, first select the Recirculation mode. If the windows are fogged, select the Fresh Air mode. Warmed air will then flow from the windshield and side defroster vents.

Temperature Sensors

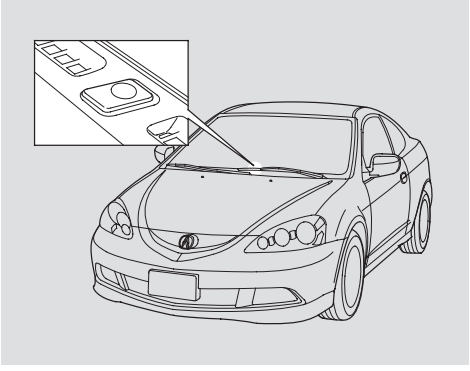

The heating and cooling system has temperature sensors next to the steering column and in the top of the dashboard. Do not cover the sensors or spill any liquid on them.

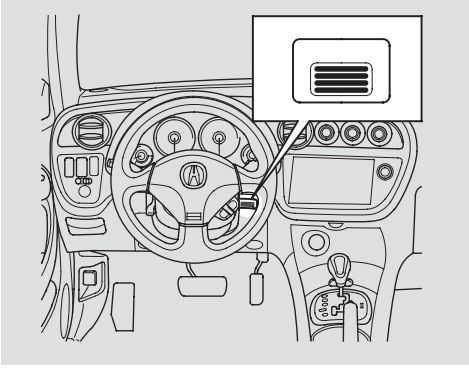

Playing the Radio

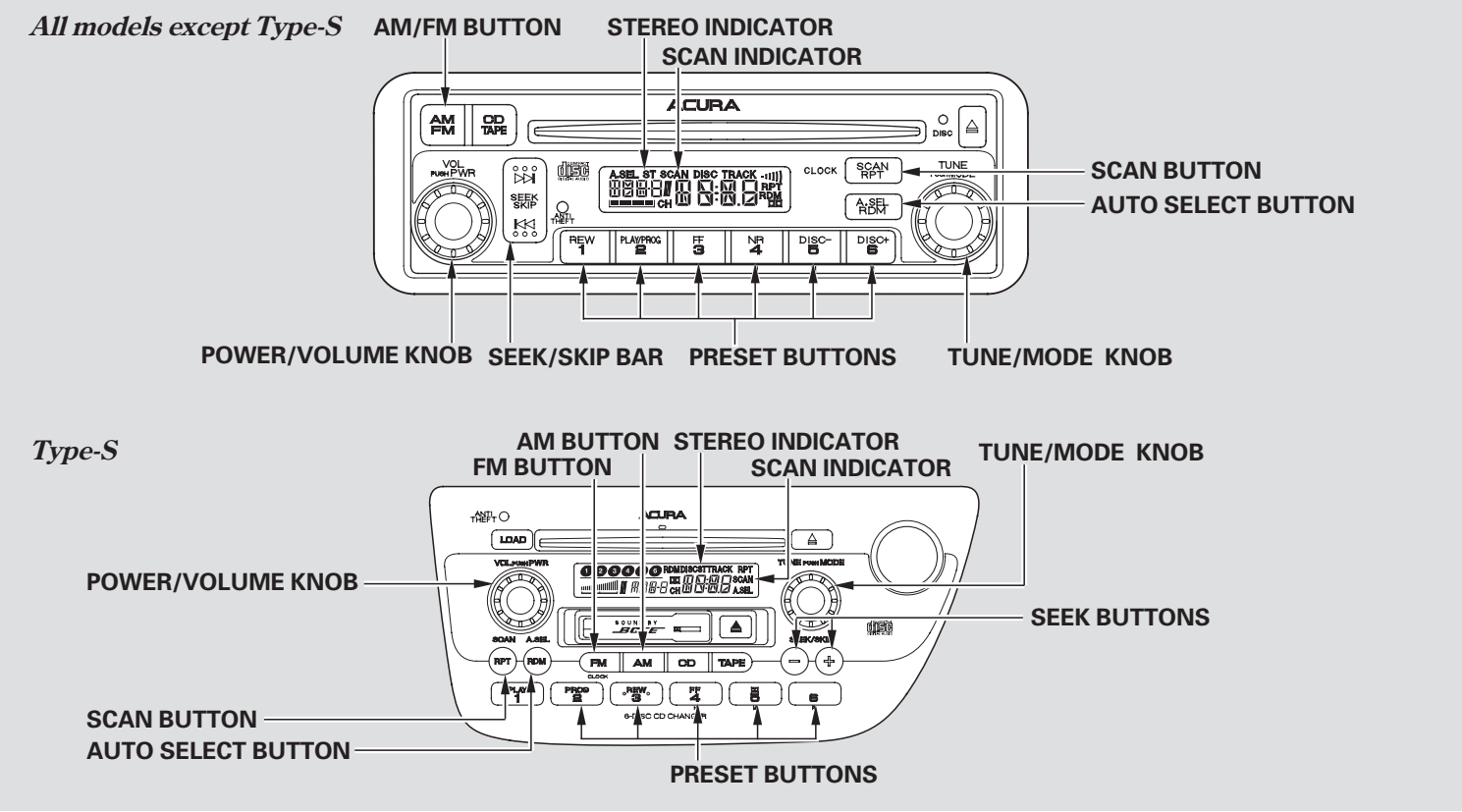

Playing the Radio

To Play the Radio
The ignition switch must be in the ACCESSORY (I) or ON (II) position. Turn the system on by pressing the PWR/VOL knob, or the AM or FM button. Adjust the volume by turning the knob.

The band and frequency that the radio was last tuned to is displayed. To change bands, press the AM or FM button. On the FM band, ST will be displayed if the station is broadcasting in stereo. Stereo reproduction on AM is not available.

To Select a Station
You can use these five methods to find radio stations on a selected band: **TUNE, SEEK, SCAN,** the preset buttons, and **AUTO SELECT**.

TUNE — Use the TUNE knob to tune the radio to a desired frequency. Turn the knob right to tune to a higher frequency, or left to tune to a lower frequency.

SEEK — The SEEK function searches up and down from the current frequency to find a station with a strong signal. To activate it, press the |◄◄ or ►►| side of the bar or (−)/(+) buttons, then release it.

SCAN — The SCAN function samples all the stations with strong signals on the selected band. To activate it, press the SCAN button, then release it. You will see SCAN in the display. The system will scan for a station with a strong signal. When it finds one, it will stop and play that station for about 5 seconds. If you do nothing, the system will then scan for the next strong station and play it for 5 seconds. When it plays a station that you want to listen to, press the SCAN button again.

CONTINUED

Playing the Radio

Preset — Each preset button can store one frequency on AM, and two frequencies on FM.

1. Select the desired band, AM or FM. FM1 and FM2 let you store two frequencies with each preset button.
2. Use the TUNE, SEEK, or SCAN function to tune the radio to a desired station.
3. Pick a preset button, and hold it until you hear a beep.
4. Repeat steps 1 through 3 to store a total of six stations on AM and twelve stations on FM.

The preset frequencies will be lost if your vehicle's battery goes dead, is disconnected, or the radio fuse is removed.

AUTO SELECT — If you are traveling far from home and can no longer receive the stations you preset, you can use the Auto Select feature to find stations in the local area.

Press the A. SEL button. "A.SEL" will flash in the display, and the system will go into scan mode for several seconds. It stores the frequencies of six AM stations and twelve FM stations in the preset buttons.

You will see a "0" displayed after pressing a preset button if Auto Select cannot find a strong station for every preset button.

If you do not like the stations Auto Select has stored, you can store other frequencies on the preset buttons. Use the TUNE, SEEK, or SCAN function to find stations, then store them in the preset buttons as described previously.

To turn off Auto Select, press the A. SEL button. This restores the presets you originally set.

Adjusting the Sound
Press the MODE (TUNE) knob repeatedly to display the Bass (BAS), Treble (TRE), Balance (BAL), and Fader (FAD) setting.

Each mode is shown in the display as it changes. Turn the MODE (TUNE) knob to adjust the setting to your liking. When the level reaches the center, you will see "C" in the display. The system will automatically return the display to the selected audio mode about 5 seconds after you stop adjusting a mode.

Treble/Bass — Use the TRE/BAS modes to adjust the tone to your liking.

Balance/Fader — These two modes adjust the strength of the sound coming from each speaker. BAL adjusts the side-to-side strength, while FAD adjusts the front-to-back strength.

Audio System Lighting
You can use the instrument panel brightness control knob to adjust the illumination of the audio system (see page 62). The audio system illuminates when the parking lights are on, even if the radio is off.

Radio Reception

Radio Frequencies

Your vehicle's radio can receive the complete AM and FM bands. Those bands cover these frequencies:

AM band: 530 to 1,710 kilohertz
FM band: 87.7 to 107.9 megahertz

Radio stations on the AM band are assigned frequencies at least ten kilohertz apart (530, 540, 550). Stations on the FM band are assigned frequencies at least 0.2 megahertz apart (87.9, 88.1, 88.3).

Stations must use these exact frequencies. It is fairly common for stations to round-off the frequency in their advertising, so your radio could display a frequency of 100.9 even though the announcer may identify the station as "FM101."

Radio Reception

How well your vehicle's radio receives stations is dependent on many factors, such as the distance from the station's transmitter, nearby large objects, and atmospheric conditions.

A radio station's signal gets weaker as you get farther away from its transmitter. If you are listening to an AM station, you will notice the sound volume becoming weaker and the station drifting in and out. If you are listening to an FM station, you will see the stereo indicator flickering off and on as the signal weakens. Eventually, the stereo indicator will go off and the sound will fade completely as you get out of range of the station's signal.

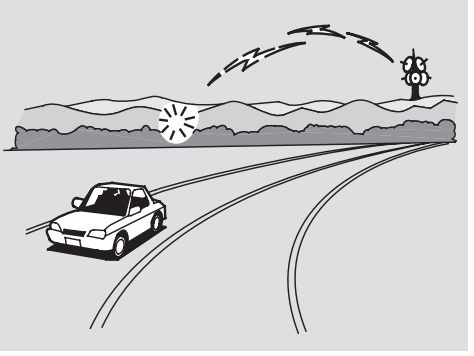

Driving very near the transmitter of a station that is broadcasting on a frequency close to the frequency of the station you are listening to can also affect your radio's reception. You may temporarily hear both stations, or hear only the station you are close to.

Radio Reception

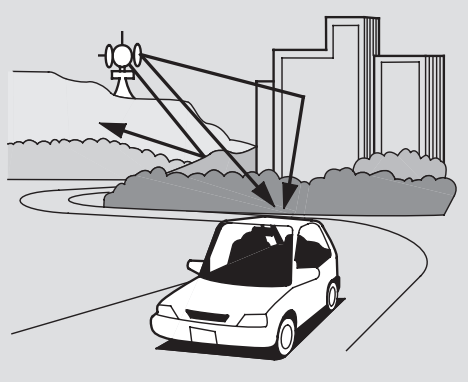

Radio signals, especially on the FM band, are deflected by large objects such as buildings and hills. Your radio then receives both the direct signal from the station's transmitter, and the deflected signal. This causes the sound to distort or flutter. This is a main cause of poor radio reception in city driving.

Radio reception can be affected by atmospheric conditions such as thunderstorms, high humidity, and even sunspots. You may be able to receive a distant radio station one day and not receive it the next day because of a change in conditions.

Electrical interference from passing vehicles and stationary sources can cause temporary reception problems.

As required by the FCC:
Changes or modifications not expressly approved by the party responsible for compliance could void the user's authority to operate the equipment.

Playing a Tape

All models except Type-S

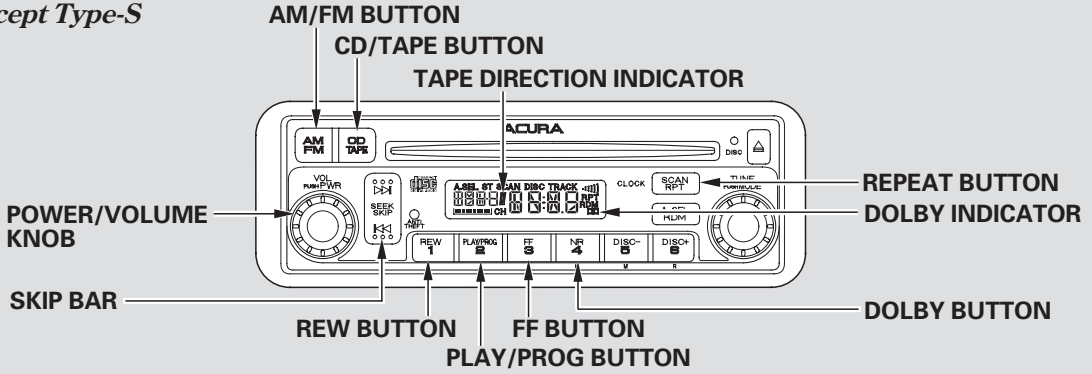

Type-S

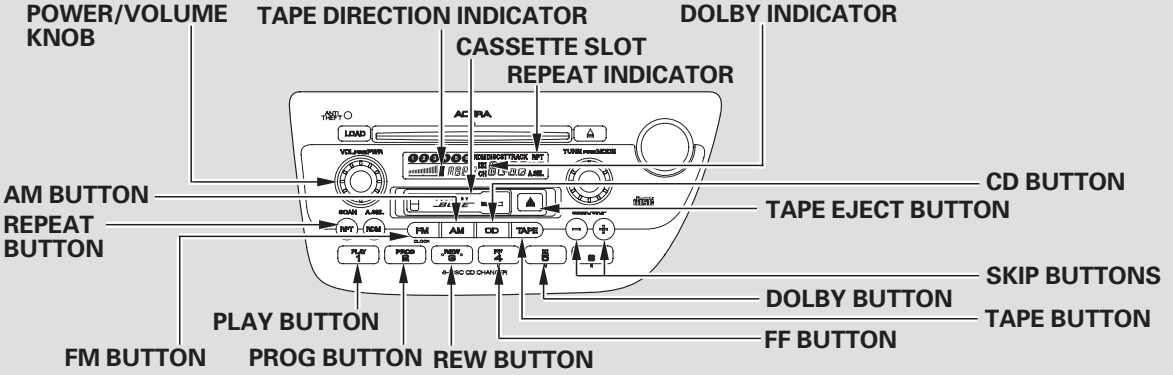

Playing a Tape

To Play a Tape

Optional on all models except Type-S

The ignition switch must be in the ACCESSORY (I) or ON (II) position. Make sure the open side of the tape is facing right, then insert the tape most of the way into the slot. The system will pull the tape in the rest of the way, and begin to play it.

The tape direction indicator will come on to show you which side of the tape is playing. The ▲ indicates the side you inserted upward is now playing. If you want to play the other side, press the PLAY/PROG button. When the player reaches the end of the tape, it will automatically reverse direction and play the other side.

Dolby* noise reduction turns on when you insert a tape. The DD indicator will come on in the display. If the tape was not recorded in Dolby, turn it off by pressing the NR (DD) button. Dolby remains off until you press the NR (DD) button again.

* Dolby noise reduction manufactured under license from Dolby Laboratories Licensing Corporation. "DOLBY" and the double-D symbol DD are trademarks of Dolby Laboratories Licensing Corporation.

To Stop Playing a Tape

To remove the tape, press the EJECT button. If you want to turn the player off, press the PWR/VOL knob or turn off the ignition. The tape will remain in the drive. When you turn the system back on, the tape will begin playing where it left off.

To switch to the radio or CD player while a tape is playing, press the AM/FM or CD/TAPE button. To change back to the tape player, press the CD/TAPE button.

Type-S

To switch to the radio or CD changer while listening to a tape, press the AM, FM, or CD button. To change back to the tape player, press the TAPE button.

Tape Search Functions

FF/REW — To rewind the tape, push the REW button. You will see REW in the display. To fast forward the tape, push the FF button. You will see FF displayed. Press the FF, REW, PLAY, or PLAY/PROG button to take the system out of rewind or fast forward.

CONTINUED

Playing a Tape

SKIP — Press the ⏮ / (−) button to find the beginning of the current song or passage. Press the ⏭ / (+) button to find the beginning of the next song or passage. When the system reaches the beginning of a song or passage, it begins to play it.

REPEAT — Press the RPT button to continuously play a song or passage. You will see RPT displayed. The track will repeat until you press the RPT button again.

NOTE: The SKIP and REPEAT functions use silent periods on the tape to find the end of a song or passage. These features may not work if there is almost no gap between selections, a high noise level, or a silent period in the middle of a selection.

Caring for the Tape and Player
The tape player picks up dirt and oxides from the tape. This contamination build up over time and causes the sound quality to degrade. To prevent this, you should clean the player after every 30 hours of use.

If you do not clean the tape player regularly, it may eventually become impossible to remove the contamination with a normal cleaning kit. Your dealer has a cleaning kit available.

Use 100-minute or shorter tapes. Tapes longer than that may break or jam the drive.

If the tape is loose, tighten it by turning the hub with a pencil or your finger. If the label is peeling off, remove it or it could cause the tape to jam in the player. Never try to insert a warped or damaged tape in the player.

Store tapes in their cases to protect them from dust and moisture. Never place tapes where they will be exposed to direct sunlight, high heat, or high humidity. If a tape is exposed to extreme heat or cold, let it reach a moderate temperature before inserting it into the player.

Never try to insert foreign objects into the tape player.

Type-S only
If you see the error indication "TAPE ERR" on the display, press the EJECT button to remove the tape from the unit. Make sure the tape is not damaged. If the tape will not eject or the error indication stays on after the tape ejects, take the vehicle to your dealer.

Playing a CD

All models except Type-S

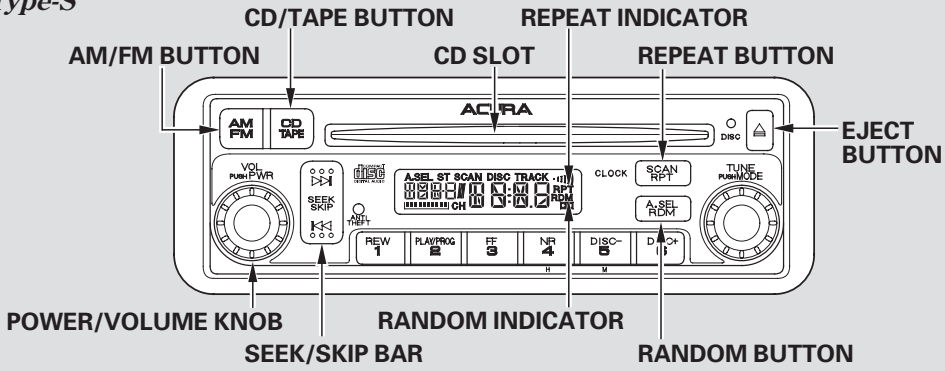

Type-S

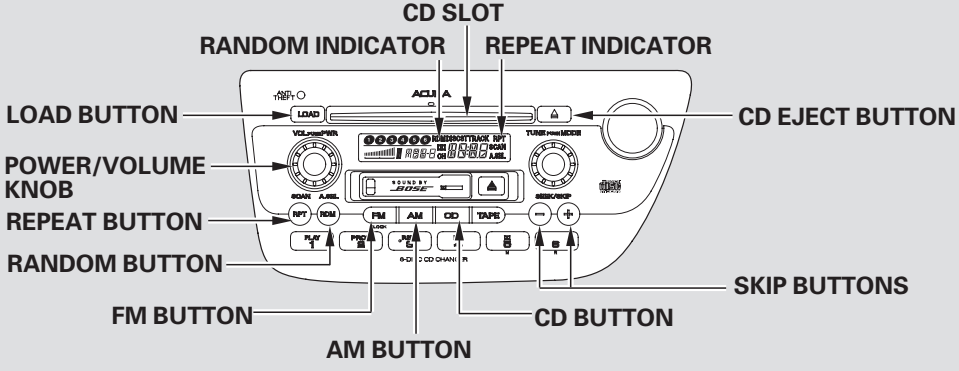

Playing a CD

CD Player
With the ignition in the ACCESSORY (I) or ON (II) position, insert a CD into the CD slot. The drive will pull the CD in the rest of the way and begin to play it. You operate the CD player with the same controls used for the radio. The number of the track playing is shown in the display. The system will continuously play a CD until you change modes.

To Change Tracks (SKIP)
Each time you press and release ►►I / (+) , the player skips forward to the beginning of the next track. Press and release I◄◄ / (−) to skip backward to the beginning of the previous track. To move rapidly within a track, press and hold the ►►I / (+) or I◄◄ / (−) . You will see CUE or REW in the display.

REPEAT − To continuously replay a track, press and release the RPT button. You will see RPT in the display. Press the RPT button again to turn it off.

Type-S only
Pressing either of the SKIP buttons also turns off the repeat feature.

RANDOM − This feature plays the tracks in random order. To activate Random Play, press and release the RDM button. You will see RDM in the display. This continues until you press the RDM button again.

To Stop Playing a CD
Press the eject button (▲) to remove the CD. If you eject the CD, but do not remove it from the slot, the system will automatically reload the CD after 15 seconds and put it in pause mode. To begin playing, press the CD button.

Press the AM/FM button to switch to the radio while a CD is playing. Press the CD button to play the CD.

If you turn the system off while a CD is playing, either with the PWR/VOL knob or by turning off the ignition, the CD will stay in the drive. When you turn the system back on, the CD will begin playing where it left off.

Operating the CD Changer

Type-S

Your vehicle's audio system has an in-dash CD changer that holds up to six CDs, providing several hours of continuous entertainment. You operate this CD changer with the same controls used for the radio and tape player.

To load CDs or operate the CD changer, the ignition switch must be in the ACCESSORY (I) or ON (II) position.

Load and play only standard round CDs. Odd-shaped CDs may jam in the drive or cause other problems. You cannot load and play 3-inch (8 cm) CDs in this system.

NOTICE

Avoid using discs with adhesive labels. The label can curl up and cause the disc to jam in the unit.

Loading CDs in the Changer

To load multiple CDs in one operation:

1. Press and hold the Load button until you see "LOAd" in the display, then release the button.

2. On the upper left side of the display, the CD number for an empty position will begin blinking and the green CD Loaded indicator will come on.

3. Insert the CD into the CD slot. Insert it only about halfway; the drive will pull it in the rest of the way. You will see "BUSY" in the display. The CD Loaded indicator turns red and blinks as the CD is loaded.

4. When LOAd appears again in the display, insert the next CD into the CD slot.

5. Repeat this until all six positions are loaded. The system will then begin playing the last CD loaded.

If you are not loading CDs into all six positions, press the Load button again after the last CD has loaded. The system will begin playing the last CD loaded.

If you stop loading CDs before all six positions are filled, and you do not press the Load button, the system will wait for 10 seconds, then stop the load operation and begin playing the last CD loaded.

CONTINUED

CD Changer

To load a single CD:

1. Press and release the Load button.

2. When the CD number for an empty position starts to blink and the green CD Loaded indicator comes on, you will see LOAd in the display. Insert the CD into the CD slot. Insert it only about halfway, the drive will pull it in the rest of the way.

3. The system will load the CD, and begin playing it.

If you press the Load button while a CD is playing, the system will stop playing that CD and start the loading sequence. It will then play the CD just loaded.

You can also load a CD into an empty position while a CD is playing by pressing the appropriate preset button. Select an empty position (the CD Loaded indicator is off), and press the preset button for that position (1 to 6). The system will stop playing the current CD and start the loading sequence. It will then play the CD just loaded.

Operation

Select the CD changer by pressing the CD button. You will see “Cd” in the display. The system will begin playing the last selected CD in the CD changer. You will see the CD and track numbers displayed.

When that CD ends, the next CD in the CD changer is loaded and played. After the last CD finishes, the system returns to CD 1.

To select a different CD, press the appropriate Preset button (1 – 6). If you select an empty position in the CD changer, the system will go into the loading sequence (see page 103).

You can use the SKIP buttons while a CD is playing to select passages and change tracks.

CD Changer

To move rapidly within a track, press and hold the appropriate SKIP button. You will hear a beep and the system will continue to move. Press the ⊕ button to move forward, or the ⊖ button to move backward. Release the button when the system reaches the point you want.

Each time you press the ⊕ button and release it, the system skips forward to the beginning of the next track. Press and release the ⊖ button to skip backward to the beginning of the current track. Press and release it again to skip to the beginning of the previous track.

REPEAT — To activate the Repeat feature, press and release the RPT button. You will see RPT in the display as a reminder. The system continuously replays the current track. Press the RPT button again to turn it off. Pressing either of the SKIP buttons also turns off the repeat feature.

RANDOM PLAY — This feature, when activated, plays the tracks within a CD in random order, rather than in the order they are recorded on the CD. To activate Random Play, press the RDM button. You will see RDM in the display. The system will then select and play tracks randomly. This continues until you deactivate Random Play by pressing the RDM button again, or you select a different CD with a preset button.

To take the system out of CD mode, press the AM or FM button, or insert a tape in the player. If a tape is already in the tape player, press the TAPE button. When you return to CD mode by pressing the CD button, play will continue at the same point that it left off.

If you turn the system off while a CD is playing, either with the PWR/VOL knob or the ignition switch, play will continue at the same point when you turn it back on.

CONTINUED

CD Changer

Removing CDs from the Changer
To remove the CD that is currently playing, press the eject button. You will see “EJEC” in the display. When you remove the CD from the slot, the system automatically begins the Load sequence so you can load another CD in that position. If you do not load another CD, after 10 seconds the system begins playing the next CD in the changer. If the changer is empty, the system selects the previous mode (AM, FM, or Tape).

If you do not remove the CD from the slot, the system will reload the CD after 15 seconds and put the CD changer in pause mode. To begin playing the CD, press the CD button.

To remove a different CD from the changer, first select it with the appropriate preset button. When that CD begins playing, press the eject button.

If you press the Eject button while listening to the radio or tape, or with the audio system turned off, the CD that was last selected is ejected. After that CD is ejected, pressing the Eject button again will eject the next CD in the numerical order. By doing this six times, you can remove all the CDs from the changer.

In any mode, if you press the eject button and hold it until you hear a beep, the system will eject all of the CDs in the changer.

You can also eject CDs when the ignition switch is off. The CD that was last selected is ejected first. You can eject up to six CDs, one at a time.

Operating the Optional CD Changer

Optional on all models except Type-S

A CD changer is available for your vehicle. It holds up to six CDs. You operate the CD changer with the same controls used for the in-dash CD player.

Load the desired CDs in the magazine, and load the magazine in the changer according to the instructions that came with the unit.

To select the CD changer, press the CD button. The CD and track numbers will be displayed. To select a different CD, use the preset 5 (DISC −) or preset 6 (DISC +) button. If you select an empty slot in the magazine, the changer will, after finding that slot empty, try to load the CD in the next slot.

Protecting Your CDs

General Information

- When using CD-R discs, use only high quality CDs labeled for audio use.
- When recording a CD-R, the recording must be closed for it to be used by the CD player or changer.
- CD-RW discs will not work in this unit.
- Play only standard round CDs. Odd-shaped CDs may jam in the drive or cause other problems.
- Handle your CDs properly to prevent damage and skipping.

Protecting CDs

When a CD is not being played, store it in its case to protect it from dust and other contamination. To prevent warpage, keep CDs out of direct sunlight and extreme heat.

To clean a CD, use a clean soft cloth. Wipe across the CD from the center to the outside edge.

A new CD may be rough on the inner and outer edges. The small plastic pieces causing this roughness can flake off and fall on the recording surface of the CD, causing skipping or other problems. Remove these pieces by rubbing the inner and outer edges with the side of a pencil or pen.

Never try to insert foreign objects in the CD player or the magazine.

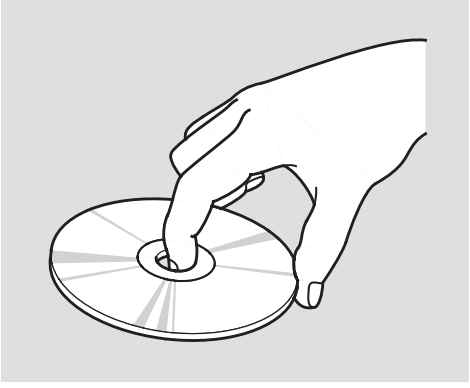

Handle a CD by its edges; never touch either surface. Do not place stabilizer rings or labels on the CD. These, along with contamination from fingerprints, liquids, and felt-tip pens, can cause the CD to not play properly, or possibly jam in the drive.

CD Player Error Messages

All models except Type-S
If you see an error message in the display while playing a CD, find the cause in the chart to the right. If you cannot clear the error message, take your vehicle to your dealer.

Message	Cause	Solution
CD DISC	FOCUS error.	Press the EJECT button and pull out the CD. Check if it is inserted correctly in the CD player. Make sure the CD is not scratched or damaged.
CD ERR	Mechanical error.	Press the EJECT button and pull out the CD. Check the CD for damage or deformation. If the CD cannot be pulled out or the error message does not disappear after the CD is ejected, consult your dealer.
CD Hot	High temperature.	Will disappear when the temperature returns to normal.

CD Changer Error Messages

All models except Type-S
If you see an error message in the display while playing a CD, find the cause in the chart to the right. If you cannot clear the error message, take your vehicle to your dealer.

Message	Cause	Solution
CDC DISC	FOCUS error.	Press the magazine eject button and pull it out, check for an error message, and insert the magazine again. If the message does not disappear or the magazine cannot be pulled out, consult your dealer.
	No CD in the CD magazine.	Insert CD.
CDC ERR	Mechanical error.	Press the magazine eject button and pull it out, check for an error message, and insert the magazine again. If the message does not disappear or the magazine cannot be pulled out, consult your dealer.
CDC Hot	High temperature.	Will disappear when the temperature returns to normal.
CDC EJEC	No CD magazine in the CD changer.	Insert CD magazine.

CD Changer Error Messages

Type-S
If you see an error message in the display while playing a CD, find the cause in the chart to the right. If you cannot clear the error message, take your vehicle to your dealer.

Message	Cause	Solution
Cd ErE0	Disc changer malfunction.	Consult your dealer.
Cd Er-H	High temperature.	Will disappear when the temperature returns to normal.
Cd ErE1	Disc changer malfunction.	Consult your dealer.

Radio Theft Protection

Theft Protection

Only on U.S. model

Your vehicle's audio system will disable itself if it is disconnected from electrical power for any reason. To make it work again, you must enter a specific five-digit code in the preset buttons. Because there are hundreds of number combinations possible from five-digits, making the system work without knowing the exact code is nearly impossible.

You should have received a card that lists your audio system's code number and serial number. It is best to store this card in a safe place at home. In addition, you should write the audio system's serial number in this Owner's Manual. If you lose the card, you must obtain the code number from your dealer. To do this, you will need the system's serial number.

If your vehicle's battery is disconnected or goes dead, or the radio fuse is removed, the audio system will disable itself. If this happens, you will see "CodE" in the frequency display the next time you turn on the system. Use the preset buttons to enter the five-digit code. The code is located on the radio code card included in your Owner's Manual kit. When it is entered correctly, the radio will start playing.

If you make a mistake entering the code, do not start over; complete the five-digit sequence, then enter the correct code. You have ten tries to enter the correct code. If you are unsuccessful in ten attempts, you must then leave the system on for 1 hour before trying again.

If the code card is lost, your dealer can access your code with your radio's serial number. To access the serial number, turn the radio on. It must display "COdE", then turn the radio off. Push the preset 1, preset 6, and power buttons at the same time, then quickly release.

You will have to store your favorite stations in the preset buttons after the system begins working. Your original settings were lost when the power was disconnected.

Setting the Clock

All models except Type-S

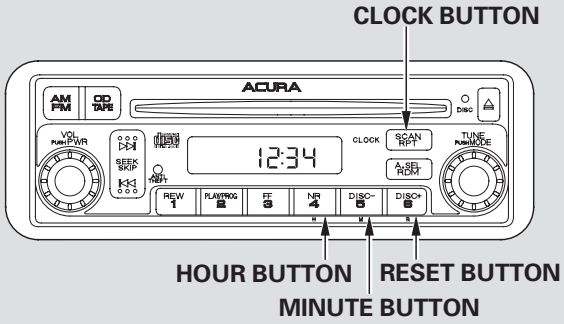

Type-S

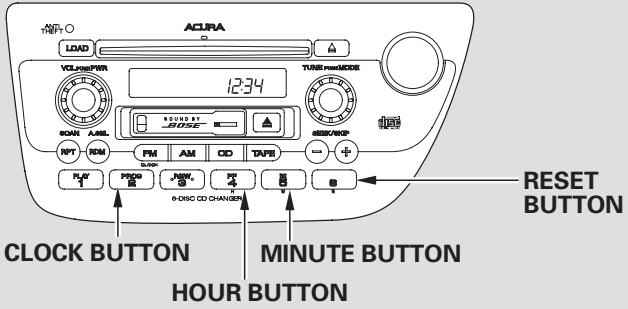

If your vehicle's battery is disconnected or goes dead, you will need to set the clock.

Press and hold the CLOCK button. Change the hour by pressing the H button until the numbers advance to the desired time. Change the minute by press the M button until the numbers advance to the desired time.

When you are finished, release the CLOCK button.

You can quickly set the time to the nearest hour. If the displayed time is before the half hour, pressing and holding the CLOCK button, then pressing the R (RESET) button sets the clock back to the previous hour. If the displayed time is after the half hour, the clock sets forward to the beginning of the next hour.

For example : 1:06 will reset to 1:00
1:52 will reset to 2:00

Security System

The security system helps to protect your vehicle and valuables from theft. The horn sounds and a combination of headlights, parking lights, side marker lights, and taillights flash if someone attempts to break into your vehicle. This alarm continues for 2 minutes, then the alarm stops. To reset an alarming system before the 2 minutes have elapsed, unlock either door with the key or the remote transmitter.

The security system sets automatically, 15 seconds after you lock the doors, hood, and hatch. The security system indicator starts blinking immediately to show you the system is setting itself.

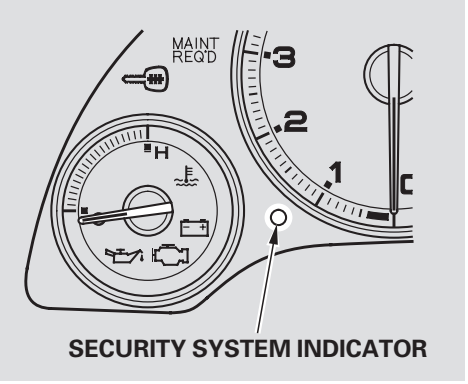

SECURITY SYSTEM INDICATOR

Once the security system is set, opening either door (without using the key or the remote transmitter), or the hood, will cause it to alarm. It also alarms if the radio is removed from the dashboard or the wiring is cut.

The security system will not set if the hood, hatch, or either door is not fully closed. If the system will not set, check the Door-open Indicator on the instrument panel (see page 54), to see if the doors and the hatch are fully closed. Since it is not part of the monitor display, manually check the hood.

Do not attempt to alter this system or add other devices to it.

Cruise Control

U.S.: All models
Canada: Premium and Type-S models only

Cruise control allows you to maintain a set speed above 25 mph (40 km/h) without keeping your foot on the accelerator pedal. It should be used for cruising on straight, open highways. It is not recommended for city driving, winding roads, slippery roads, heavy rain, or bad weather.

⚠ WARNING

Improper use of the cruise control can lead to a crash.

Use the cruise control only when traveling on open highways in good weather.

Using the Cruise Control

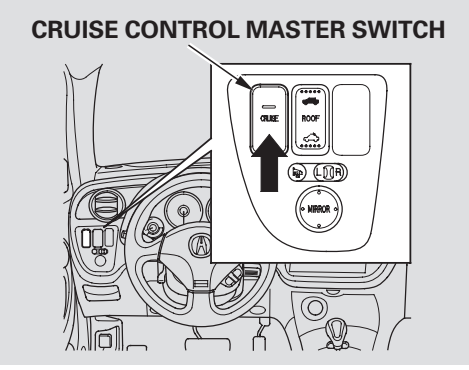

1. Push in the Cruise Control Master Switch. The indicator in the switch will come on.

2. Accelerate to the desired cruising speed above 25 mph (40 km/h).

CONTINUED

Cruise Control

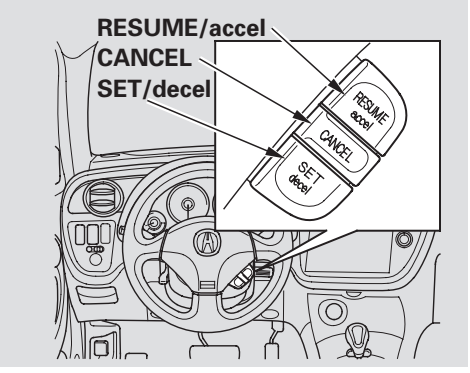

3. Press and release the SET/decel button on the steering wheel. The CRUISE CONTROL indicator on the instrument panel comes on to show the system is now activated.

The cruise control may not hold the set speed when you are going up and down hills. If your speed increases going down a hill, use the brakes to slow down. This will cancel the cruise control. To resume the set speed, press the RESUME/accel button. The CRUISE CONTROL indicator on the instrument panel will come back on.

When climbing a steep hill, the automatic transmission may downshift to hold the set speed.

Changing the Set Speed
You can increase the set cruising speed in any of these ways:

- Press and hold the RESUME/accel button. When you reach the desired cruising speed, release the button.
- Push on the accelerator pedal. Accelerate to the desired cruising speed, and press the SET/decel button.
- To increase your speed in very small amounts, tap the RESUME/accel button. Each time you do this, your vehicle will speed up about 1 mph (1.6 km/h).

Cruise Control

You can decrease the set cruising speed in any of these ways:

- Press and hold the SET/decel button. Release the button when you reach the desired speed.
- To slow down in very small amounts, tap the SET/decel button. Each time you do this, your vehicle will slow down about 1 mph (1.6 km/h).
- Tap the brake or clutch pedal lightly with your foot. The CRUISE CONTROL indicator on the instrument panel will go out. When the vehicle slows to the desired speed, press the SET/decel button.

Even with the cruise control turned on, you can still use the accelerator pedal to speed up for passing. After completing the pass, take your foot off the accelerator pedal. The vehicle will return to the set cruising speed.

Resting your foot on the brake or clutch pedal will cause the cruise control to cancel.

Cancelling the Cruise Control
You can cancel the cruise control in any of these ways:

- Tap the brake or clutch pedal.
- Push the CANCEL button on the steering wheel.
- Push the Cruise Control Master Button.

Cruise Control

Resuming the Set Speed
When you push the CANCEL button, or tap the brake or clutch pedal, the system remembers the previously-set cruising speed. To return to that speed, accelerate to above 25 mph (40 km/h) and then press and release the RESUME/accel button. The CRUISE CONTROL indicator comes on. The vehicle will accelerate to the same cruising speed as before.

Pressing the Cruise Control Master Switch turns the system completely off and erases the previous cruising speed.

Before Driving

Before you begin driving your vehicle, you should know what gasoline to use, and how to check the levels of important fluids. You also need to know how to properly store luggage or packages. The information in this section will help you. If you plan to add any accessories to your vehicle, please read the information in this section first.

General Precautions 120
Break-in Period 121
Fuel Recommendation 121
Service Station Procedures 122
Refueling.....122
Opening and Closing the Hood.....123
Oil Check.....125
Engine Coolant Check 125
Fuel Economy 126
Accessories and Modifications 127
Carrying Cargo 129

General Precautions

Type-S model
Your vehicle is designed to give you optimum handling and performance on well-maintained roads. As part of this design, your vehicle has a minimum of ground clearance.

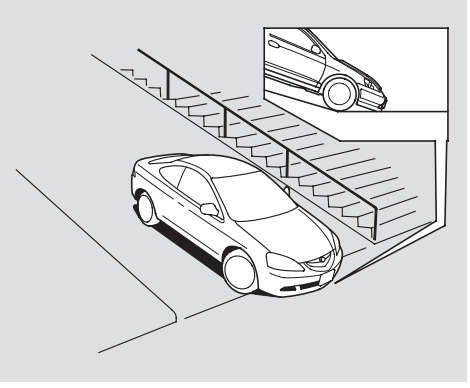

- Use caution if you drive your vehicle on very rough or rutted roads. You could damage the suspension and underbody by bottoming out. Going too fast over parking lot “speed bumps” can also cause damage.

- Curbs and steep inclines could damage the front and rear bumpers. Low curbs that do not affect the average vehicle may be high enough to hit the bumper on your vehicle. The front or rear bumper may scrape when trying to drive onto an incline, such as a steep driveway or trailer ramps.

Break-in Period, Fuel Recommendation

Break-in Period

Help assure your vehicle's future reliability and performance by paying extra attention to how you drive during the first 600 miles (1,000 km). During this period:

- Avoid full-throttle starts and rapid acceleration.
- Avoid hard braking for the first 200 miles (300 km).
- Do not change the oil until the scheduled maintenance time.
- Do not tow a trailer.

You should also follow these recommendations with an overhauled or exchanged engine, or when the brakes are replaced.

Fuel Recommendation

(All models except Type-S)

Your vehicle is designed to operate on unleaded gasoline with a pump octane number of 86 or higher. Use of a lower octane gasoline can cause a persistent, heavy metallic rapping noise that can lead to engine damage.

(Type-S)

Your vehicle is designed to operate on premium unleaded gasoline with a pump octane of 91 or higher. Use of a lower octane gasoline can cause occasional metallic knocking noises in the engine and will result in decreased engine performance. Use of a gasoline with a pump octane less than 86 can lead to engine damage.

We recommend gasoline containing detergent additives that help prevent fuel system and engine deposits.

In addition, in order to maintain good performance, fuel economy, and emissions control, we strongly recommend, in areas where it is available, the use of gasoline that does NOT contain manganese-based fuel additives such as MMT.

Use of gasoline with these additives may adversely affect performance, and cause the Malfunction Indicator Lamp on your instrument panel to come on. If this happens, contact your dealer for service.

Some gasoline today is blended with oxygenates such as ethanol or MTBE. Your vehicle is designed to operate on oxygenated gasoline containing up to 10 percent ethanol by volume and up to 15 percent MTBE by volume. Do not use gasoline containing methanol.

If you notice any undesirable operating symptoms, try another service station or switch to another brand of gasoline.

For further important fuel-related information, please refer to your **Quick Start Guide**.

Service Station Procedures

Refueling

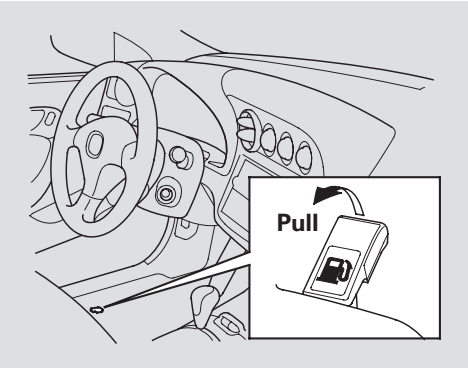

1. Park with the driver's side of the vehicle closest to the service station pump.

2. Open the fuel fill door by pulling on the handle to the left of the driver's seat.

⚠ WARNING

Gasoline is highly flammable and explosive. You can be burned or seriously injured when handling fuel.

- Stop the engine and keep heat, sparks, and flame away.
- Handle fuel only outdoors.
- Wipe up spills immediately.

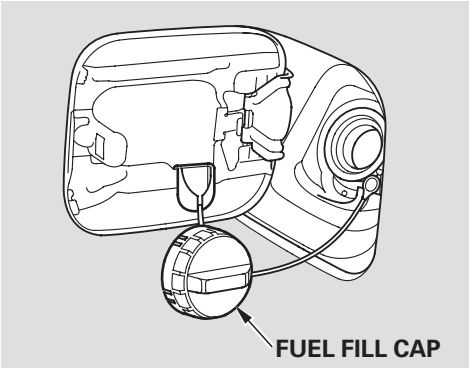

3. Remove the fuel fill cap slowly. You may hear a hissing sound as pressure inside the tank escapes. Put the attachment on the fuel fill cap into the slit on the fuel fill door.

4. Stop filling the tank after the fuel nozzle automatically clicks off. Do not try to "top off" the tank. Leave some room for the fuel to expand with temperature changes.

If the fuel nozzle keeps clicking off even though the tank is not full, there may be a problem with your vehicle's fuel vapor recovery system. The system helps keep fuel vapors from going into the atmosphere. Consult your dealer.

5. Screw the fuel fill cap back on until it clicks at least three times. If you do not properly tighten the cap, the Malfunction Indicator Lamp may come on (see page 205).

6. Push the fuel fill door closed until it latches.

Opening and Closing the Hood

1. Park the vehicle, and set the parking brake. Pull the hood release handle located under the lower left corner of the dashboard. The hood will pop up slightly.

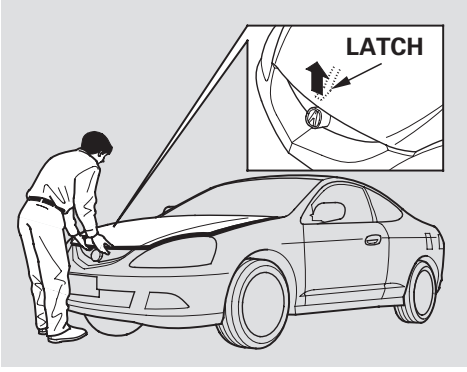

2. Put your fingers under the front edge of the hood just to left of center. Lift up the hood latch handle until it releases the hood. Lift up the hood.

CONTINUED

Service Station Procedures

If the hood latch handle moves stiffly, or if you can open the hood without lifting the handle, the mechanism should be cleaned and lubricated.

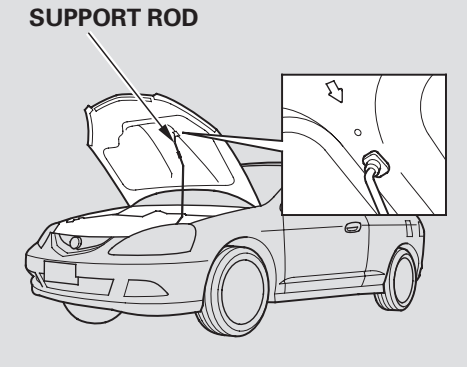

3. Pull the support rod out of its clip and insert the end into the designated hole in the hood.

To close the hood, lift it up slightly to remove the support rod from the hole. Put the support rod back into its holding clip. Lower the hood to about a foot (30 cm) above the fender, then let it drop. Make sure it is securely latched.

Oil Check

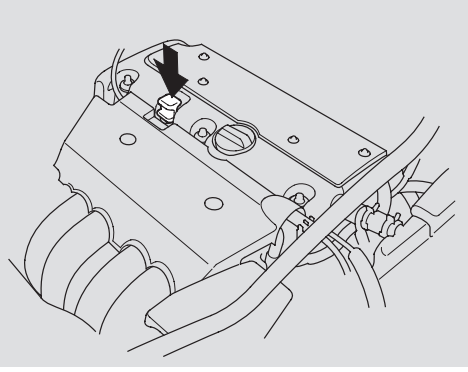

Wait a few minutes after turning the engine off before you check the oil.

1. Remove the dipstick (orange loop).
2. Wipe the dipstick with a clean cloth or paper towel.
3. Insert it all the way back in its tube.

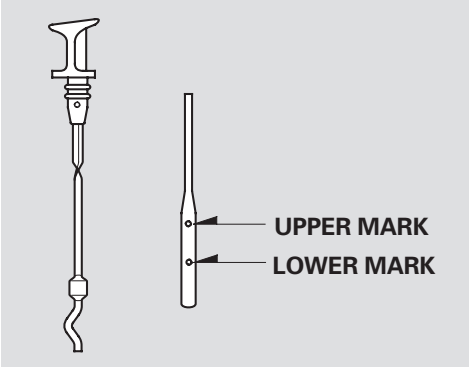

4. Remove the dipstick again and check the level. It should be between the upper and lower marks.

If it is near or below the lower mark, see **Adding Oil** on page 162 .

Engine Coolant Check

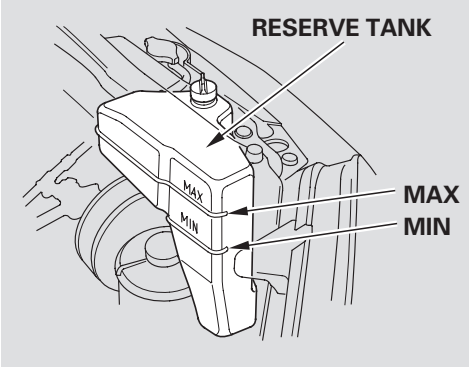

Look at the coolant level in the radiator reserve tank. Make sure it is between the MAX and MIN lines. If it is below the MIN line, see **Adding Engine Coolant** on page 165 for information on adding the proper coolant.

CONTINUED

Service Station Procedures, Fuel Economy

Refer to **Owner's Maintenance Checks** on page 156 for information about checking other items on your vehicle.

Improving Fuel Economy

- Always maintain your vehicle according to the maintenance schedule. See **Owner's Maintenance Checks** on page 156 .

  For example, an underinflated tire causes more "rolling resistance," which uses fuel.

  The build-up of snow or mud on your vehicle's underside adds weight and rolling resistance. Frequent cleaning helps your fuel mileage and reduces the chance of corrosion.

- Drive moderately. Rapid acceleration, abrupt cornering, and hard braking use more fuel.

- Always drive in the highest gear possible.

- Try to maintain a constant speed. Every time you slow down and speed up, your vehicle uses extra fuel. Use the cruise control when appropriate.

- Combine several short trips into one.

- The air conditioning puts an extra load on the engine which makes it use more fuel. Use the fresh-air ventilation when possible.

Accessories and Modifications

Modifying your vehicle, or installing some non-Acura accessories, can make it unsafe. Before you make any modifications or add any accessories, be sure to read the following information.

Accessories

Your dealer has Acura accessories that allow you to personalize your vehicle. These accessories have been designed and approved for your vehicle, and are covered by warranty.

Although aftermarket accessories may fit on your vehicle, they may not meet factory specifications, and could adversely affect your vehicle's handling and stability.

⚠ WARNING

Improper accessories or modifications can affect your vehicle's handling, stability, and performance, and cause a crash in which you can be hurt or killed.

Follow all instructions in this owner's manual regarding accessories and modifications.

When properly installed, cellular phones, alarms, two-way radios, and low-powered audio systems should not interfere with your vehicle's computer controlled systems, such as your airbags and anti-lock brakes.

Before installing any accessory:

- Make sure the accessory does not obscure any lights, or interfere with proper vehicle operation or performance.
- Be sure electronic accessories do not overload electrical circuits (see page 208) or interfere with proper operation.
- Have the installer contact your dealer for assistance before installing any electronic accessory.

Accessories and Modifications

Modifying Your Vehicle
Removing parts from your vehicle, or replacing components with aftermarket components could seriously affect your vehicle's handling, stability, and reliability.

Some examples are:

- Lowering your vehicle with an aftermarket suspension kit that significantly reduces ground clearance can allow the undercarriage to hit speed bumps or other raised objects, which could cause the airbags to deploy.
- Raising your vehicle with an aftermarket suspension kit can affect the handling and stability.
- Aftermarket wheels, because they are a universal design, can cause excessive stress on suspension components.
- Larger or smaller wheels and tires can interfere with the operation of your vehicle's anti-lock brakes and other systems.
- Modifying your steering wheel or any other part of your vehicle's safety features can make the systems ineffective.

If you plan to modify your vehicle, consult your dealer.

Carrying Cargo

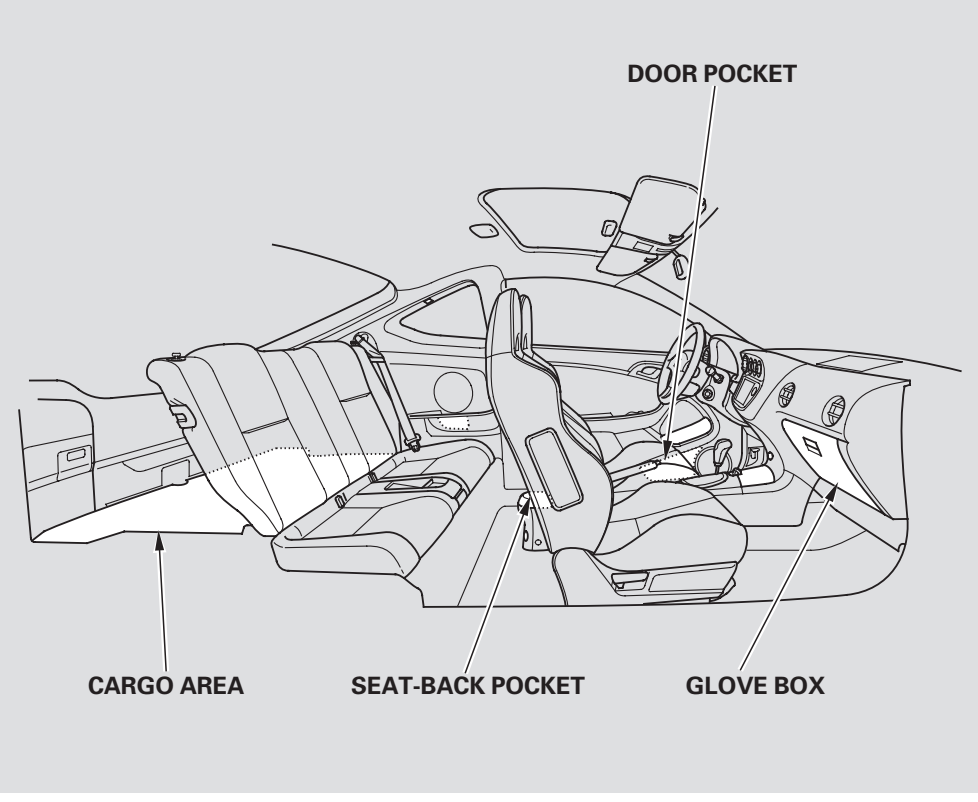

Your vehicle has several convenient storage areas:

- Glove box
- Door and seat-back pockets
- Cargo area
- Roof-rack (if installed)

However, carrying too much cargo, or improperly storing it, can affect your vehicle's handling, stability, stopping distance, and tires, and make it unsafe. Before carrying any type of cargo, be sure to read the following pages.

Load Limit
The maximum load for your vehicle is 700 lbs (325 kg). This figure includes the total weight of all occupants, cargo, accessories, and the tongue weight if you are towing a trailer.

⚠ WARNING

Overloading or improper loading can affect handling and stability and cause a crash in which you can be hurt or killed.

Follow all load limits and other loading guidelines in this manual.

Steps for Determining Correct Load Limit:

1. Locate the statement, "the combined weight of occupants and cargo should never exceed 700 lbs (325 kg)" on your vehicle's placard. (The placard is on the driver's doorjamb).

2. Determine the combined weight of the driver and passengers that will be riding in your vehicle.

3. Subtract the combined weight of the driver and passengers from 700 lbs (325 kg).

4. The resulting figure equals the available amount of cargo and luggage load capacity. For example, if the maximum load is 700 lbs (325 kg) and there will be four 150 lb (70 kg) passengers in your vehicle, the amount of available cargo and luggage load capacity is 100 lbs (45 kg).
[700 − 600 (4 × 150) = 100 lbs]/
[325 − 280 (4 × 70) = 45 kg]

5. Determine the combined weight of luggage and cargo being loaded on the vehicle. The weight may not safely exceed the available cargo and luggage load capacity in step 4.

6. If your vehicle will be towing a trailer, load from your trailer will be transferred to your vehicle. Consult this manual to determine how this reduces the available cargo and luggage load capacity of your vehicle. [See page 148.]

In addition, the total weight of the vehicle, all passengers, accessories, cargo, and trailer tongue load must not exceed the Gross Vehicle Weight Rating (GVWR) or the Gross Axle Weight Rating (GAWR). Both are on a label on the driver's doorjamb.

Carrying Items in the Passenger Compartment

- Store or secure all items that could be thrown around and hurt someone during a crash.
- Be sure items placed on the floor behind the front seats cannot roll under the seats and interfere with the pedals or seat operation.
- Keep the glove box closed while driving. If it is open, a passenger could injure their knees during a crash or sudden stop.

Carrying Cargo in the Cargo Area or on a Roof Rack

- Distribute cargo evenly on the floor of the cargo area, placing the heaviest items on the bottom and as far forward as possible.
- If you fold down the back seat, tie down items that could be thrown about the vehicle during a crash or sudden stop.
- Do not place items on the cargo area cover, or stack objects higher than the top of the back seat. They could block your view and be thrown about the vehicle during a crash or sudden stop.
- If you carry large items that prevent you from closing the hatch, exhaust gas can enter the passenger area. To avoid the possibility of **carbon monoxide poisoning**, follow the instructions on page 45.
- If you can carry any items on a roof rack, be sure the total weight of the rack and the items does not exceed the maximum allowable weight. Please contact your dealer for further information.

Driving

This section gives you tips on starting the engine under various conditions, and how to operate the manual and automatic transmissions. It also includes important information on parking your vehicle, the braking system, and facts you need if you are planning to tow a trailer.

Preparing to Drive 134
Starting the Engine..... 135
Manual Transmissions..... 136
Automatic Transmission..... 139
Parking..... 145
Braking System..... 146
Anti-lock Brakes (ABS) 147
Towing a Trailer 148

Preparing to Drive

You should do the following checks and adjustments every day before you drive your vehicle.

1. Make sure all windows, mirrors, and outside lights are clean and unobstructed. Remove frost, snow, or ice.
2. Check that the hood is fully closed.
3. Check that the hatch is fully closed.
4. Visually check the tires. If a tire looks low, use a gauge to check its pressure.
5. Check that any items you may be carrying are stored properly or fastened down securely.
6. Check the seat adjustment (see page 71).
7. Check the adjustment of the inside and outside mirrors (see page 79).
8. Check the steering wheel adjustment (see page 63).
9. Make sure the doors and the hatch are securely closed and locked.
10. Fasten your seat belt. Check that your passengers have fastened their seat belts (see page 15).
11. When you start the engine, check the gauges and indicators in the instrument panel (see page 51).

Starting the Engine

1. Apply the parking brake.

2. In cold weather, turn off all electrical accessories to reduce the drain on the battery.

3. *Manual Transmission:*
   Push the clutch pedal down all the way.

   Automatic Transmission:
   Make sure the shift lever is in Park. Press on the brake pedal.

4. Without touching the accelerator pedal, turn the ignition key to the START (III) position. Do not hold the key in START for more than 15 seconds at a time. If the engine does not start right away, pause for at least 10 seconds before trying again.

NOTICE

The immobilizer system protects your vehicle from theft. If an improperly-coded key (or other device) is used, the engine's fuel system is disabled. See ***Immobilizer System*** *on page* 65.

5. If the engine does not start within 15 seconds, or starts but stalls right away, repeat step 4 with the accelerator pedal pressed halfway down. If the engine starts, release pressure on the accelerator pedal so the engine does not race.

6. If the engine still does not start, press the accelerator pedal all the way down and hold it there while starting in order to clear flooding. If the engine still does not start, return to step 5.

NOTICE

The engine is harder to start in cold weather. Also, the thinner air found at altitudes above 8,000 feet (2,400 meters) adds to this problem.

Manual Transmissions

The manual transmission is synchronized in all forward gears for smooth operation. It has a lockout so you cannot shift directly from Fifth to Reverse. When shifting up or down, make sure you push the clutch pedal down all the way, shift to the next gear, and let the pedal up gradually. When you are not shifting, do not rest your foot on the clutch pedal. This can cause your clutch to wear out faster.

Come to a full stop before you shift into Reverse. You can damage the transmission by trying to shift into Reverse with the vehicle moving. Push down the clutch pedal, and pause for a few seconds before shifting into Reverse, or shift into one of the forward gears for a moment. This stops the gears so they won't "grind."

When slowing down, you can get extra braking from the engine by shifting to a lower gear. This extra braking can help you maintain a safe speed and prevent your brakes from overheating while going down a steep hill. Before downshifting, make sure the engine speed will not go into the tachometer's red zone in the lower gear.

⚠ WARNING

Rapid slowing or speeding-up can cause loss of control on slippery surfaces. If you crash, you can be injured.

Use extra care when driving on slippery surfaces.

Manual Transmissions

Recommended Shift Points

Drive in the highest gear that lets the engine run and accelerate smoothly. This will give you the best fuel economy and effective emissions control. The following shift points are recommended:

5-speed

Shift up	Normal acceleration
1st to 2nd	14 mph (23 km/h)
2nd to 3rd	25 mph (40 km/h)
3rd to 4th	40 mph (64 km/h)
4th to 5th	49 mph (79 km/h)

6-speed

Shift up	Normal acceleration
1st to 2nd	13 mph (21 km/h)
2nd to 3rd	23 mph (37 km/h)
3rd to 4th	37 mph (59 km/h)
4th to 5th	45 mph (73 km/h)
5th to 6th	50 mph (80 km/h)

Engine Speed Limiter

If you exceed the maximum speed for the gear you are in, the engine speed will enter into the tachometer's red zone. If this occurs, you may feel the engine cut in and out. This is caused by a limiter in the engine's computer controls. The engine will run normally when you reduce the RPM below the red zone.

Before downshifting, make sure the engine will not go into the tachometer's red zone.

Manual Transmissions

Reverse Lockout
The 6-speed manual transmission has an electric lockout so you cannot accidentally shift from Fifth to Reverse instead of Sixth while the vehicle is moving. If you cannot shift to Reverse when the vehicle is stopped:

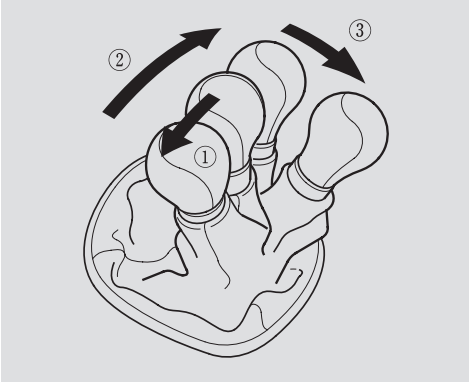

1. With the clutch pedal pressed, move the shift lever to the first/second gear side of the Neutral gate, then shift to Reverse.
2. If you are still unable to shift to Reverse, apply the parking brake, and turn the ignition key to ACCESSORY (I) or LOCK (0).
3. Press the clutch pedal, and shift to Reverse.
4. With the clutch pedal still pressed, start the engine.

If you need to use this procedure to shift to Reverse, your vehicle may be developing a problem. Have the vehicle checked by your dealer.

Automatic Transmission

Shift Lever Position Indicators

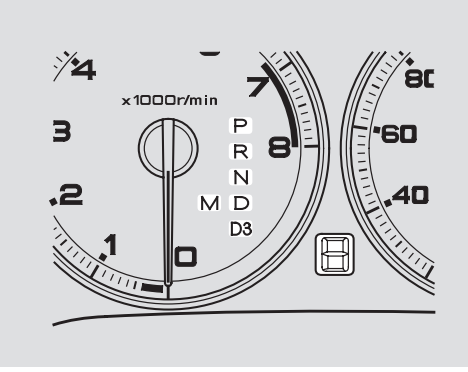

These indicators on the instrument panel show which position the shift lever is in.
The “D” indicator comes on for a few seconds when you turn the ignition switch to ON (II). If it flashes at any time (in any shift position), it indicates a possible problem in the transmission. Avoid rapid acceleration, and have the transmission checked by a dealer as soon as possible.

Shifting

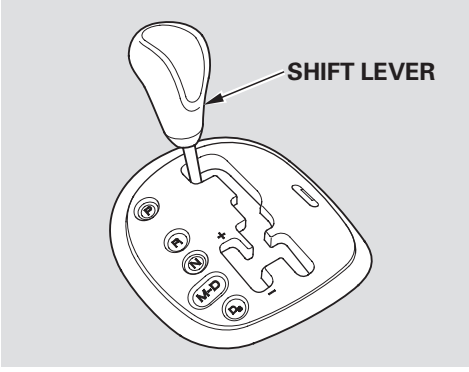

To shift from any position, move the shift lever. You cannot shift out of Park when the ignition switch is in LOCK (0) or ACCESSORY (I) position.

To shift from:	Do this:
P to R	Press the brake pedal, then move the shift lever.
R to N N to D D to D3 D3 to D D to N N to R R to P	Move the lever.

CONTINUED

Automatic Transmission

Park (P) — This position mechanically locks the transmission. Use Park whenever you are turning off or starting the engine. To shift out of Park, you must press on the brake pedal and have your foot off the accelerator pedal.

If you have done all of the above and still cannot move the lever out of Park, see **Shift Lock Release** on page 144 .

To avoid transmission damage, come to a complete stop before shifting into Park. The shift lever must be in Park before you can remove the key from the ignition switch.

Reverse (R) — Press the brake pedal, and move the shift lever from Park to Reverse. To shift from Reverse to Neutral, come to a complete stop, and then shift.

Your vehicle has a reverse lockout so you cannot accidentally shift to Reverse when the vehicle speed exceeds 5 mph (8 km/h).

If you cannot shift to Reverse when the vehicle is stopped, press the brake pedal and slowly shift to Neutral, and then to Reverse.

If there is a problem in the reverse lockout system, or your vehicle's battery is disconnected or goes dead, you cannot shift to Reverse. (Refer to **Shift Lock Release** on page 144).

Neutral (N) — Use Neutral if you need to restart a stalled engine, or if it is necessary to stop briefly with the engine idling. Shift to the Park position if you need to leave your vehicle for any reason. Press on the brake pedal when you are moving the shift lever from Neutral to another gear.

Drive (D) — Use this position for your normal driving. The transmission automatically selects a suitable gear for acceleration.

Drive (D3) — This position is similar to D, except only the first three gears are selected. Use D3 when towing a trailer in hilly terrain, or to provide engine braking when going down a steep hill. D3 can also keep the transmission from cycling third, fourth and fifth gears in stop-and-go driving.

Automatic Transmission

Sequential SportShift Mode — With the shift lever in “D” position, you can select the Sequential SportShift Mode to shift gears; much like a manual transmission, but without a clutch pedal.

To enter the Sequential SportShift Mode, move the shift lever further to the driver’s side. To return to “D”, move the shift lever to the passenger’s side.

When you move the shift lever from “D” to the Sequential SportShift Mode, the display shows the selected gear.

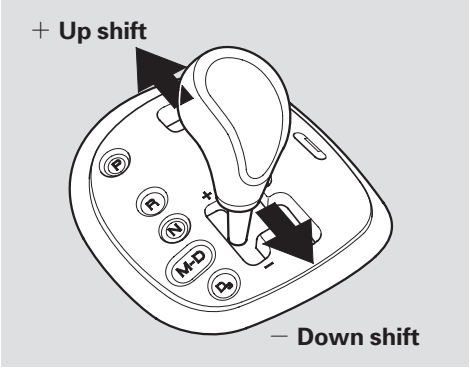

In Sequential SportShift mode, each time you push forward on the shift lever, the transmission will shift to a higher gear. Pull back on the lever to downshift. The number of the gear selected is displayed on the instrument panel (see page 139).

When you accelerate away from a stop, the transmission will be in first gear. The transmission will not automatically upshift. Watch the tachometer and upshift manually before the engine reaches redline.

The transmission remains in the selected gear (5, 4, 3, 2, or 1). There is no automatic downshift when you push the accelerator pedal to the floor.

CONTINUED

Automatic Transmission

The transmission may automatically downshift from the higher gear to the lower gear under the following conditions:

- The vehicle speeds drops below
  5 → 4: 33 mph (52 km/h)
  4 → 3: 20 mph (32 km/h)
- If you drive uphill between
  5 → 4: 45—33 mph (72—52 km/h)
  4 → 3: 33—20 mph (52—32 km/h)
- If you press the brake pedal as you drive downhill.

Downshifting gives you more power when climbing or provides engine braking when going down a steep hill.

The transmission will also shift automatically as the vehicle comes to a complete stop. It will downshift to first gear when the vehicle speed is under 6 mph (10 km/h).

If you try to manually downshift at a speed that would cause the engine to exceed the redline in a lower gear, the transmission will not downshift. The gear indicator will flash the number of the lower gear several times, then return to the higher gear.

If the vehicle speed slows to below the redline of the selected lower gear position while the indicator is flashing, the transmission will downshift and the display will show the selected lower gear.

The table shows the speed ranges for upshifting and downshifting.

To shift from	Speed range
1 → 2	over 0 mph (0 km/h)
2 → 3	over 6 mph (10 km/h)
3 → 4	over 20 mph (32 km/h)
4 → 5	over 33 mph (52 km/h)

To shift from	Speed range
2 → 1	under 31 mph (50 km/h)
3 → 2	under 63 mph (100 km/h)
4 → 3	under 94 mph (150 km/h)
5 → 4	under 131 mph (210 km/h)

Starting in Second Gear
When you are in Sequential Sportshift mode, and the vehicle is stopped, push forward on the shift lever to shift to second gear. You will see “2” in the display. Starting out in second gear will help to reduce wheelspin in deep snow or on a slippery surface.

Engine Speed Limiter
If you exceed the maximum speed for the gear you are in, the engine speed will enter into the tachometer’s red zone. If this occurs, you may feel the engine cut in and out. This is caused by a limiter in the engine’s computer controls. The engine will run normally when you reduce the rpm below the red zone.

Automatic Transmission

Shift Lock Release
Do this if pushing on the brake pedal does not shift the transmission out of Park:

1. Set the Parking brake.

2. Make sure the ignition switch is in the LOCK (0) position.

3. Put a cloth on the edge of the Shift Lock Release slot cover next to the shift lever. Using a small flat-tipped screwdriver or a metal fingernail file, carefully pry on the edge of the cover.

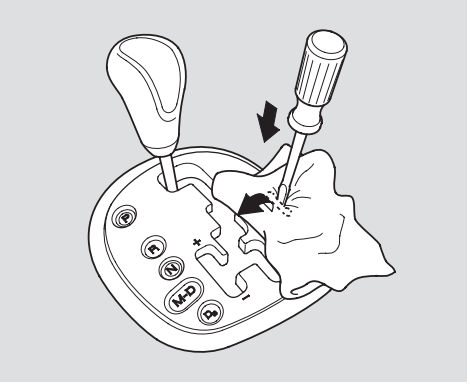

4. Insert the key in the Shift Lock Release slot.

5. Push down on the key while you move the shift lever out of Park to Neutral.

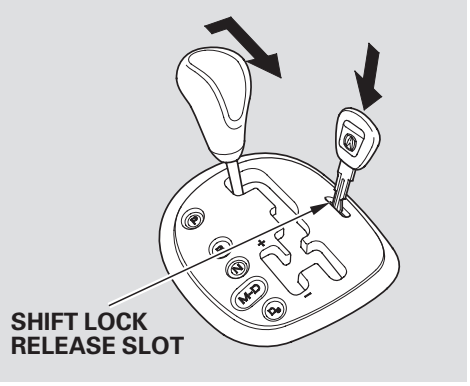

6. Remove the key from the Shift Lock Release slot. Press the brake pedal and restart the engine.

If you need to use the Shift Lock Release, it means your vehicle is developing a problem. Have it checked by your dealer.

Parking

Always use the parking brake when you park your vehicle. Make sure the parking brake is set firmly or your vehicle may roll if it is parked on an incline.

If your vehicle has an automatic transmission, set the parking brake before you put the transmission in Park. This keeps the vehicle from moving and putting pressure on the parking mechanism in the transmission.

Parking Tips

- Make sure the moonroof and the windows are closed.
- Turn off the lights.
- Place any packages, valuables, etc. in the cargo area, or take them with you.
- Lock the doors.
- Never park over dry leaves, tall grass, or other flammable materials. The hot three way catalytic converter could cause these materials to catch on fire.
- If the vehicle is facing uphill, turn the front wheels away from the curb. If you have a manual transmission, put it in first gear.
- If the vehicle is facing downhill, turn the front wheels toward the curb. If you have a manual transmission, put it in reverse gear.
- Make sure the parking brake is fully released before driving away. Driving with the parking brake partially set can overheat or damage the rear brakes.

Braking System

Your vehicle is equipped with disc brakes at all four wheels. A power assist helps reduce the effort needed on the brake pedal. The ABS helps you retain steering control when braking very hard.

Resting your foot on the pedal keeps the brakes applied lightly, builds up heat, and reduces their effectiveness. It also keeps your brake lights on all the time, confusing drivers behind you.

Constant application of the brakes when going down a long hill builds up heat and reduces their effectiveness. Use the engine to assist the brakes by taking your foot off the accelerator and downshifting to a lower gear.

Check the brakes after driving through deep water. Apply the brakes moderately to see if they feel normal. If not, apply them gently and frequently until they do. Be extra cautious in your driving.

Braking System Design
The hydraulic system that operates the brakes has two separate circuits. Each circuit works diagonally across the vehicle (the left-front brake is connected with the right-rear brake, etc.). If one circuit should develop a problem, you will still have braking at two wheels.

Brake Wear Indicators
If the brake pads need replacing, you will hear a distinctive, metallic screeching sound when you apply the brake pedal. If you do not have the brake pads replaced, they will screech all the time. It is normal for the brakes to occasionally squeal or squeak when you apply them.

Anti-lock Brakes (ABS)

The Anti-lock Brake System (ABS) helps prevent the brakes from locking up and helps you retain steering control by pumping the brakes rapidly, much faster than a person can do it.

You should never pump the brake pedal; Let the ABS work for you by always keeping firm, steady pressure on the brake pedal as you steer away from the hazard. This is sometimes referred to as "stomp and steer."

You will feel a pulsation in the brake pedal when the ABS activates, and may hear some noise. This is normal: it is the ABS rapidly pumping the brakes. On dry pavement, you will need to press on the brake pedal very hard before the ABS activates. However, you may feel the ABS activate immediately if you are trying to stop on snow or ice.

ABS Indicator

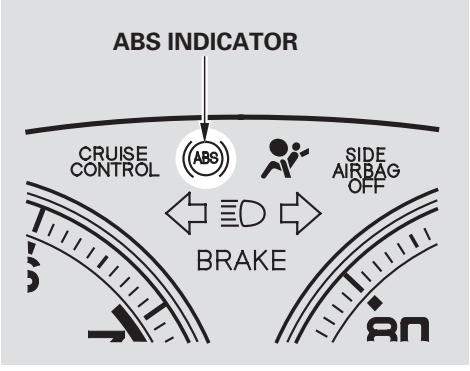

If the ABS indicator comes on, the anti-lock function of the braking system has shut down. The brakes still work like a conventional system, but without anti-lock. You should have the dealer inspect your vehicle as soon as possible.

If the ABS indicator comes on while driving, test the brakes as shown on page 206 .

Important Safety Reminders
ABS does not reduce the time or distance it takes to stop the vehicle; it only helps with steering control during braking.

ABS will not prevent a skid that results from changing direction abruptly, such as trying to take a corner too fast or making a sudden lane change.

ABS cannot prevent the loss of stability. Always steer moderately when you are braking hard. Severe or sharp steering wheel movement can still cause your vehicle to veer into oncoming traffic or off the road.

A vehicle with ABS may require a longer distance to stop on loose or uneven surfaces, such as gravel or snow, than a vehicle without anti-lock.

Towing a Trailer

Your vehicle has been designed to primarily carry passengers and their cargo. You can also use it to tow a trailer if you carefully observe the load limits, use the proper equipment, and follow the guidelines in this section.

⚠ WARNING

Exceeding any load limit or improperly loading your vehicle and trailer can cause a crash in which you can be seriously hurt or killed.

Check the loading of your vehicle and trailer carefully before starting to drive.

Load Limits

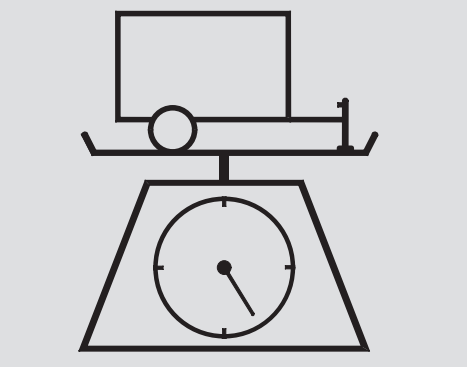

- **Total Trailer Weight:** The maximum allowable weight of the trailer and everthing in or on it must not exceed 1,000 lbs (450 kg). Towing a load that is too heavy can seriously affect your vehicle's handling and performance. It can also damage the engine and drivetrain.

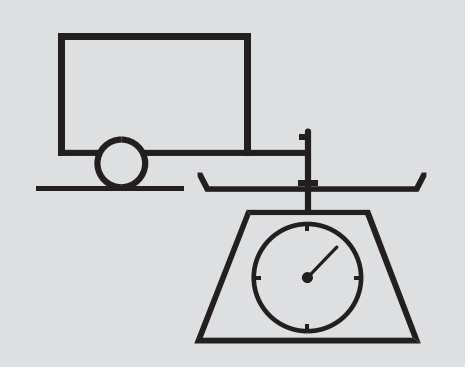

- **Tongue Load:** The weight that the tongue of a fully-loaded trailer puts on the hitch should be approximately 10 percent of the total trailer weight. Too much tongue load reduces front-tire traction and steering control. Too little tongue load can make the trailer unstable and cause it to sway.

Towing a Trailer

To achieve a proper tongue load, start by loading 60 percent of the load toward the front of the trailer and 40 percent toward the rear, then re-adjust the load as needed.

- **Gross Vehicle Weight Rating (GVWR):** The maximum allowable weight of the vehicle, all occupants, all cargo, and the tongue load is 3,725 lbs (1,690 kg).
- **Gross Axle Weight Rating (GAWR):** The maximum allowable weight of the vehicle axles are 1,960 lbs (890 kg) on the front axle, and 1,830 lbs (830 kg) on the rear axle.

Checking Loads

The best way to confirm that vehicle and trailer weights are within limits is to have them checked at a public scale.

Using a suitable scale or a special tongue load gauge, check the tongue load the first time you set up a towing combination (a fully-loaded vehicle and trailer), then recheck the tongue load whenever the conditions change.

Towing Equipment and Accessories

Towing can require a variety of equipment, depending on the size of your trailer, how it will be used, how much load you are towing, and where you tow.

Discuss your needs with your trailer sales or rental agency, and follow the guidelines in the rest of this section. Also make sure that all equipment is properly installed and that it meets federal, state, province, and local regulations.

Hitches

Any hitch used on your vehicle must be properly bolted to the underbody.

CONTINUED

Towing a Trailer

Safety Chains

Always use safety chains when you tow a trailer. Make sure the chains are secured to the trailer and hitch, and that they cross under the tongue and can catch the trailer if it becomes unhitched. Leave enough slack to allow the trailer to turn corners easily, but do not let the chains drag on the ground.

Trailer Brakes

Acura recommends that any trailer having a total weight of 1,000 lbs (450 kg) or more be equipped with its own electric or surge-type brakes.

If you choose electric brakes, be sure they are electrically actuated. Do not attempt to tap into your vehicle's hydraulic system. No matter how successful it may seem, any attempt to attach trailer brakes to your vehicle's hydraulic system will lower braking effectiveness and create a potential hazard.

Trailer Lights

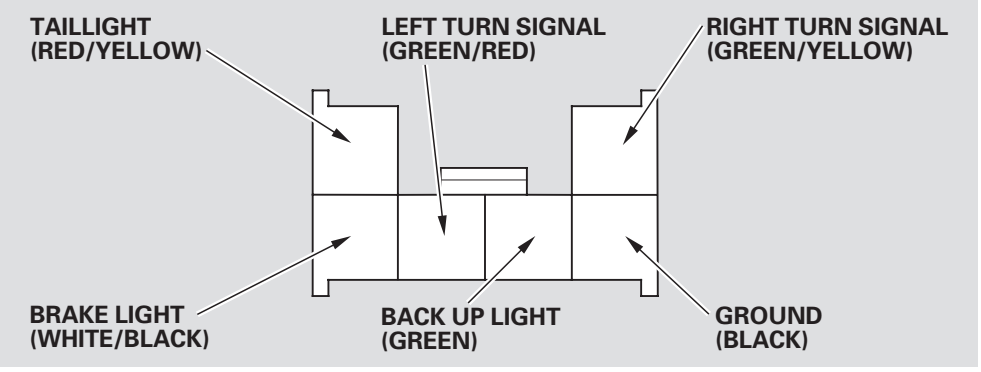

If you use a converter, you can get the connector and pins that mate with the connector in your vehicle from your dealer.

Your vehicle has a trailer lighting connector located behind the right side panel in the cargo area. Refer to the drawing above for the wiring color code and purpose of each pin.

Towing a Trailer

Additional Towing Equipment
Many states and Canadian provinces require special outside mirrors when towing a trailer. Even if they don't, you should install special mirrors if you cannot clearly see behind you, or if the trailer creates a blind spot.

Ask your trailer sales or rental agency if any other items are recommended or required for your towing situation.

Pre-Tow Checklist
When preparing to tow, and before driving away, be sure to check the following:

- The vehicle has been properly serviced, and the tires, brakes, suspension, cooling system, and lights are in good operating condition.
- All weights and loads are within limits.
- The hitch, safety chains, and any other attachments are secure.
- All items in or on the trailer are properly secured and cannot shift while you drive.
- Your vehicle tires and spare are properly inflated, and the trailer tires and spare are inflated as recommended by the trailer maker.

Driving Safely With a Trailer
The added weight, length, and height of a trailer will affect your vehicle's handling and performance, so driving with a trailer requires some special driving skills and techniques.

For your safety and the safety of others, take time to practice driving maneuvers before heading for the open road, and follow the guidelines discussed below.

Towing Speeds and Gears
Drive slower than normal in all driving situations, and obey posted speed limits for vehicles with trailers. If you have an automatic transmission, use D position when towing a trailer on level roads.

CONTINUED

Towing a Trailer

Making Turns and Braking
Make turns more slowly and wider than normal. The trailer tracks a smaller arc than your vehicle, and it can hit or run over something the vehicle misses. Allow more time and distance for braking. Do not brake or turn suddenly as this could cause the trailer to jackknife or turn over.

Driving on Hills
When climbing hills, closely watch your temperature gauge. If it nears the red (Hot) mark, turn the air conditioning off, reduce speed and, if necessary, pull to the side of the road to let the engine cool.

If the automatic transmission shifts frequently while going up a hill, shift to D3.

If you must stop when facing uphill, use the foot brake or parking brake. Do not try to hold the vehicle in place by pressing on the accelerator, as this can cause the automatic transmission to overheat.

When driving down hills, reduce your speed and shift down to 2nd gear (manual) or D3 (automatic). Do not "ride" the brakes, and remember it will take longer to slow down and stop when towing a trailer.

Handling Crosswinds and Buffeting
Crosswinds and air turbulence caused by passing trucks can disrupt your steering and cause trailer swaying. When being passed by a large vehicle, keep a constant speed and steer straight ahead. Do not try to make quick steering or braking corrections.

Backing Up
Always drive slowly and have someone guide you when backing up. Grip the *bottom* of the steering wheel; then turn the wheel to the left to get the trailer to move to the left, and turn the wheel right to move the trailer to the right.

Parking
Follow all normal precautions when parking, including firmly setting the parking brake and putting the transmission in Park (automatic) or in 1st or Reverse (manual). Also, place wheel chocks at each of the trailer's tires.

Maintenance

This section explains why it is important to keep your vehicle well maintained and how to follow basic maintenance safety precautions.

This section also includes Maintenance Schedules for normal driving and severe driving conditions, a Maintenance Record, and instructions for simple maintenance tasks you may want to take care of yourself.

If you have the skills and tools to perform more complex maintenance tasks on your vehicle, you may want to purchase the Service Manual. See page 231 for information on how to obtain a copy, or see your dealer.

Maintenance Safety 154
Maintenance Schedule 155
Maintenance Record 159
Fluid Locations 161
Adding Engine Oil 162
Changing the Oil and Filter 163
Engine Coolant 165
Windshield Washers 167
Automatic Transmission Fluid 167
Brake and Clutch Fluid 169
Drive Belts 170
Power Steering Fluid 171
Lights 172
Cleaning the Seat Belts 179
Floor Mats 179
Dust and Pollen Filter 179
Wiper Blades 180
Tires 182
Checking the Battery 188
Vehicle Storage 189

Maintenance Safety

All service items not detailed in this section should be performed by a certified technician or other qualified mechanic.

Important Safety Precautions
To eliminate potential hazards, read the instructions before you begin, and make sure you have the tools and skills required.

- Make sure your vehicle is parked on level ground, the parking brake is set, and the engine is off.
- To clean parts, use a commercially available degreaser or parts cleaner, not gasoline.
- To reduce the possibility of fire or explosion, keep cigarettes, sparks, and flames away from the battery and all fuel-related parts.
- Wear eye protection and protective clothing when working with the battery or compressed air.

⚠ WARNING

Improperly maintaining this vehicle, or failing to correct a problem before driving can cause a crash in which you can be seriously hurt or killed.

Always follow the inspection and maintenance recommendations and schedules in this owner's manual.

Potential Vehicle Hazards
- **Carbon Monoxide poison from engine exhaust.** Be sure there is adequate ventilation whenever you operate the engine.
- **Burns from hot parts.** Let the engine and exhaust system cool before touching any parts.
- **Injury from moving parts.** Do not run the engine unless instructed to do so.

⚠ WARNING

Failure to properly follow maintenance instructions and precautions can cause you to be seriously hurt or killed.

Always follow the procedures and precautions in this owner's manual.

Some of the most important safety precautions are given here. However, we cannot warn you of every conceivable hazard that can arise in performing maintenance. Only you can decide whether or not you should perform a given task.

Maintenance Schedule

The maintenance schedule assumes you will use your vehicle as normal transportation for passengers and their possessions. You should also follow these recommendations:

- Avoid exceeding your vehicle's load limit. This puts excess stress on the engine, brakes, and many other vehicle parts. The load limit is shown on the tire information label on the driver's doorjamb.
- Operate your vehicle on reasonable roads within the legal speed limit.
- Drive your vehicle regularly over a distance of several miles (kilometers).
- Always use unleaded gasoline with the proper octane rating (see page 121).

Which Schedule to Follow
Service your vehicle according to the time and mileage periods on one of the Maintenance Schedules on the following pages.

U.S. Owners — Follow the Maintenance Schedule for Severe Conditions if you drive your vehicle MAINLY under one or more of the following conditions.

- Driving less than 5 miles (8 km) per trip or, in freezing temperatures, driving less than 10 miles (16 km) per trip.
- Driving in extremely hot [over 90°F (32°C)] conditions.
- Used primarily as a delivery vehicle or taxi that is driven mostly in stop-and-go traffic and/or parked with the engine idling.
- Trailer towing, driving with a roof top carrier, or driving in mountainous conditions.
- Driving on muddy, dusty, or de-iced roads.

NOTE:
If you only *OCCASIONALLY* drive under a "severe" condition, you should follow the Normal Conditions Maintenance Schedule.

Canadian Owners — Follow the Maintenance Schedule for Severe Conditions.

Maintenance Schedule

Servicing Your Vehicle
Your authorized dealer knows your vehicle best and can provide competent, efficient service. However, service at a dealer is not mandatory to keep your warranties in effect. Maintenance may be done by any qualified service facility or skilled person to keep your warranties in effect. Keep all the receipts as proof of completion, and have the person who does the work fill out the Maintenance Record. Check your warranty booklet for more information.

We recommend the use of genuine Acura parts and fluids whenever you have maintenance done.

U.S. Vehicles: **Maintenance, replacement, or repair of emissions control devices and systems may be done by any automotive repair establishment or individual using parts that are "certified" to EPA standards.**

According to state and federal regulations, failure to perform maintenance on the items marked with # will not void your emissions warranties. However, all maintenance services should be performed at the recommended time or mileage period to ensure long-term reliability.

Owner's Maintenance Checks
You should check the following items at the specified intervals. If you are unsure of how to perform any check, turn to the appropriate page listed.

- Engine oil level — Check every time you fill the fuel tank. See page 125.
- Engine coolant level — Check the radiator reserve tank every time you fill the fuel tank. See page 125.
- Automatic transmission — Check the fluid level monthly. See page 167.
- Brakes — Check the fluid level monthly. See page 169.
- Tires — Check the tire pressure monthly. Examine the tread for wear and foreign objects. See page 184.
- Lights — Check the operation of the headlights, parking lights, taillights, high-mount brake light, and license plate lights monthly.

Service the items listed at the indicated distance (or time, if given).																
	miles x 1,000	10	20	30	40	50	60	70	80	90	100	110	120	130	140	150
	km x 1,000	16	32	48	64	80	96	112	128	144	160	176	192	208	224	240
Check engine oil and coolant		Check oil and coolant at each fuel stop														
Check tires		Check inflation and condition once a month														
Replace engine oil		●	●	●	●	●	●	●	●	●	●	●	●	●	●	●
		(Or every 1 year, whichever comes first)														
Rotate tires (follow pattern on page 186)		Every 10,000 miles (16,000 km)														
Replace engine oil filter Check front and rear brakes Check parking brake adjustment Inspect the following items: Tie-rod ends, steering gear box and boots Suspension components Driveshaft boots Brake hoses and lines (including ABS) All fluid levels and condition of fluids Exhaust system# Fuel lines and connections#			●		●		●		●		●		●		●	
		(Or every 1 year, whichever comes first)														
Inspect drive belts Replace dust and pollen filter				●			●			●			●			●
		(Or every 2 years, whichever comes first)														
Replace air cleaner element				●			●			●			●			●
Replace spark plugs												●				
Inspect valve clearance												●				
		(Otherwise adjust only if noisy)														
Replace automatic transmission fluid*1													●			
Replace manual transmission fluid													●			
		(Or every 6 years, whichever comes first)														
Inspect idle speed		Every 160,000 miles (256,000 km)														
Replace engine coolant		At 120,000 miles (192,000 km) or 10 years, then every 60,000 miles (96,000 km) or 5 years														
Replace brake fluid		Every 3 years (independent of mileage)														

*1: Replace at 120,000 miles (192,000 km) or 6 years, then every 90,000 miles (144,000 km) or 5 years.
#: See information on maintenance and emissions warranty, middle column, page 156.

Follow the Normal Maintenance Schedule if the severe driving conditions specified in the Severe Conditions Maintenance Schedule on the next page do not apply.

NOTE: If you only OCCASIONALLY drive under a “severe” condition, you should follow the Normal Conditions Maintenance Schedule.

Canadian owners should follow the Maintenance Schedule for Severe Conditions on the next page.

CONTINUED

Service the items listed at the indicated distance (or time, if given).																
	miles x 1,000	10	20	30	40	50	60	70	80	90	100	110	120	130	140	150
	km x 1,000	16	32	48	64	80	96	112	128	144	160	176	192	208	224	240
Check engine oil and coolant		Check oil and coolant at each fuel stop														
Check tires		Check inflation and condition once a month														
Replace engine oil		Every 5,000 miles (8,000 km) or every 6 months, whichever comes first														
Rotate tires (follow pattern on page 186)		Every 10,000 miles (16,000 km)														
Replace engine oil filter Check front and rear brakes Lubricate all hinges, locks, and latches Inspect the following items: Tie-rod ends, steering gear box and boots Suspension components, Driveshaft boots		●	●	●	●	●	●	●	●	●	●	●	●	●	●	●
		(Or every 1 year, whichever comes first)														
Check parking brake adjustment Inspect the following items: Brake hoses and lines (including ABS) All fluid levels and condition of fluids Exhaust system#, Fuel lines and connections# Lights and controls/vehicle underbody			●		●		●		●		●		●		●	
		(Or every 1 year, whichever comes first)														
Inspect drive belts Replace dust and pollen filter*1				●			●			●			●			●
		(Or every 2 years, whichever comes first)														
Clean and replace air cleaner element		Clean every 15,000 miles (24,000 km), and replace every 30,000 miles (48,000 km) (Use normal schedule except in dusty condition)														
Replace spark plugs												●				
Inspect valve clearance												●				
		(Otherwise adjust only if noisy)														
Replace automatic transmission fluid*2							●			●			●			●
Replace manual transmission fluid							●						●			
		(Or every 3 years, whichever comes first)														
Inspect idle speed		Every 160,000 miles (256,000 km)														
Replace engine coolant		At 120,000 miles (192,000 km) or 10 years, then every 60,000 miles (96,000 km) or 5 years														
Replace brake fluid		Every 3 years (independent of mileage)														

Follow the Severe Maintenance Schedule if you drive your vehicle MAINLY under one or more of the following conditions:

- Driving less than 5 miles (8 km) per trip or, in freezing temperatures, driving less than 10 miles (16 km) per trip.
- Driving in extremely hot [over 90°F (32°C)] conditions.
- Extensive idling or long periods of stop and go driving, such as a taxi or a commercial delivery vehicle.
- Trailer towing, driving with a roof rack, or driving in mountainous conditions.
- Driving on muddy, dusty, or de-iced roads.

Canadian Owners — Follow this Maintenance Schedule for Severe Conditions.

*1 : See dust and pollen filter on page 179 for replacement information under special driving conditions.

*2 : Replace at 60,000 miles (96,000 km) or 3 years, then every 30,000 miles (48,000 km) or 2 years.

: See information on maintenance and emissions warranty, middle column, page 156 .

Maintenance Record *(for Normal and Severe Schedules)*

You or the servicing dealer can record all completed maintenance here, whether you follow the schedule for normal conditions (page 157) or severe conditions (page 158). Keep the receipts for all work done on your vehicle.

5,000 mi 8,000 km	Signature or dealer stamp	mi/km Date
10,000 mi 16,000 km		mi/km Date
15,000 mi 24,000 km		mi/km Date
20,000 mi 32,000 km (or 1 year)		mi/km Date
25,000 mi 40,000 km		mi/km Date
30,000 mi 48,000 km		mi/km Date
35,000 mi 56,000 km		mi/km Date
40,000 mi 64,000 km (or 2 years)		mi/km Date

45,000 mi 72,000 km	Signature or dealer stamp	mi/km Date
50,000 mi 80,000 km		mi/km Date
55,000 mi 88,000 km		mi/km Date
60,000 mi 96,000 km (or 3 years)		mi/km Date
65,000 mi 104,000 km		mi/km Date
70,000 mi 112,000 km		mi/km Date
75,000 mi 120,000 km		mi/km Date
80,000 mi 128,000 km (or 4 years)		mi/km Date

CONTINUED

Maintenance Record *(for Normal and Severe Schedules)*

85,000 mi 136,000 km	Signature or dealer stamp	mi/km Date
90,000 mi 144,000 km		mi/km Date
95,000 mi 152,000 km		mi/km Date
100,000 mi 160,000 km (or 5 years)		mi/km Date
105,000 mi 168,000 km		mi/km Date
110,000 mi 176,000 km		mi/km Date
115,000 mi 184,000 km		mi/km Date
120,000 mi 192,000 km (or 6 years)		mi/km Date

125,000 mi 200,000 km	Signature or dealer stamp	mi/km Date
130,000 mi 208,000 km		mi/km Date
135,000 mi 216,000 km		mi/km Date
140,000 mi 224,000 km (or 7 years)		mi/km Date
145,000 mi 232,000 km		mi/km Date
150,000 mi 240,000 km		mi/km Date
155,000 mi 248,000 km		mi/km Date
160,000 mi 256,000 km (or 8 years)		mi/km Date

Fluid Locations

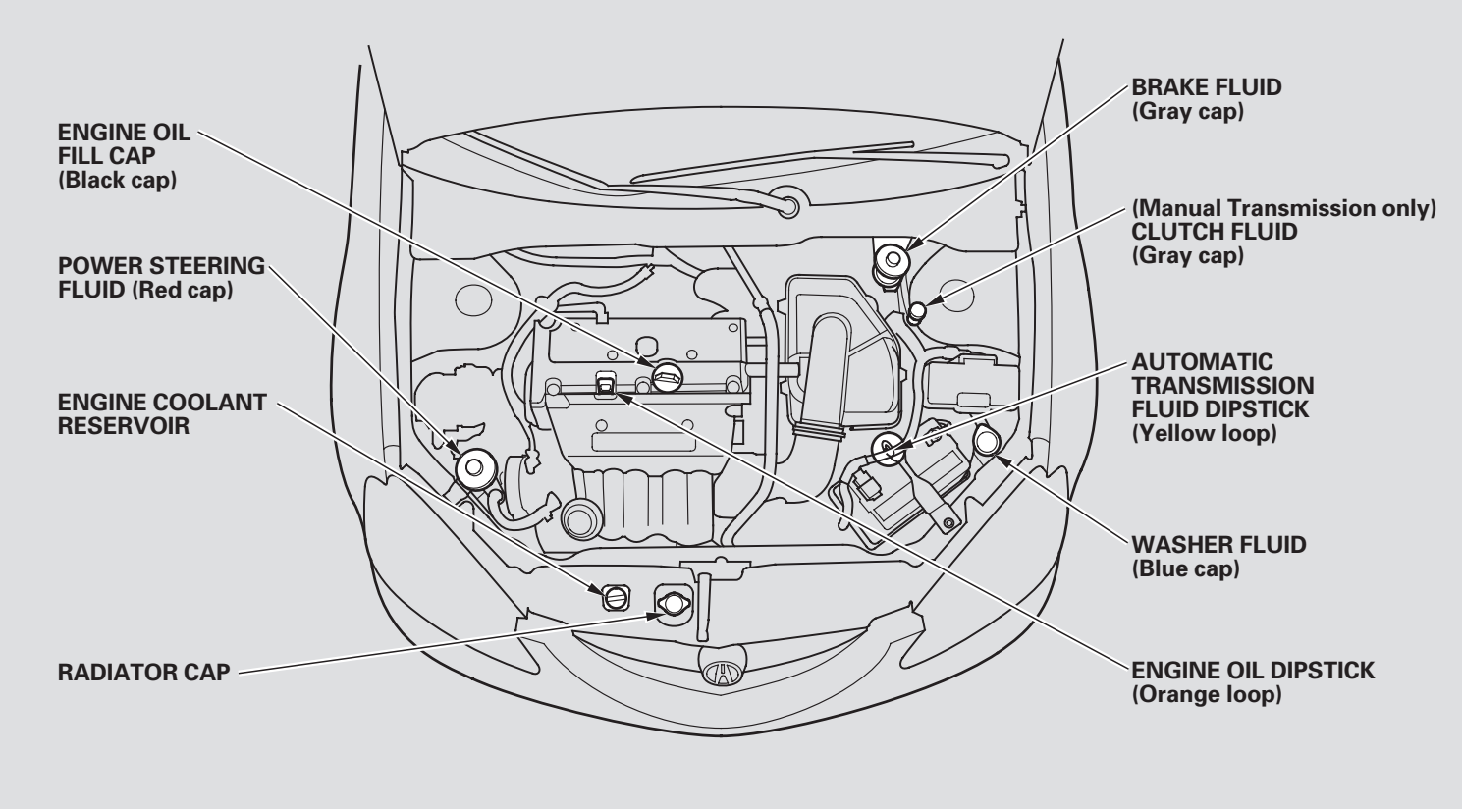

Adding Engine Oil

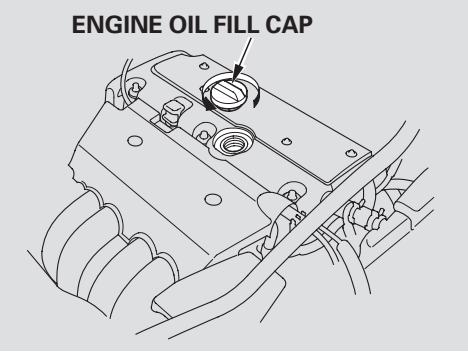

Unscrew and remove the engine oil fill cap on top of the valve cover. Pour in the oil slowly and carefully so you do not spill. Clean up any spills immediately. Spilled oil could damage components in the engine compartment.

Install the engine oil fill cap, and tighten it securely. Wait a few minutes, and recheck the oil level. Do not fill above the upper mark; you could damage the engine.

Recommended Oil
Oil is major contributor to your engine's performance and longevity. Always use a premium-grade detergent oil displaying the API Certification Seal. This seal indicates the oil is energy conserving, and that it meets the American Petroleum Institute's latest requirements. It is highly recommended that you use Honda motor oil in your vehicle.

API CERTIFICATION SEAL

Make sure the API Certification Seal says "For Gasoline Engines".

The oil's viscosity or weight is provided on the container's label. 5W-20 oil is formulated for year-round protection of your vehicle, to improve cold weather starting and fuel economy.

RSX and Premium models

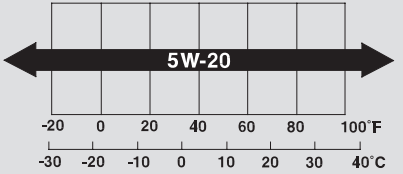

Ambient Temperature

Adding Engine Oil, Changing the Oil and Filter

Type-S

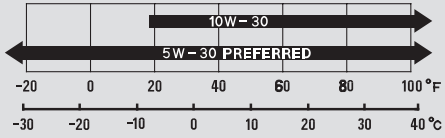

Ambient Temperature

An oil with a viscosity of 5W-30 is preferred for improved fuel economy and year-round protection in your vehicle. You may use a 10W-30 oil if the temperature in your area never goes below 20°F (−7°C).

Synthetic Oil

You may use a synthetic motor oil if it meets the same requirements given for a conventional motor oil: it displays the API Certification Seal and it is the proper weight. You must follow the oil and filter change intervals given in the maintenance schedule.

Engine Oil Additives

Your vehicle does not require any oil additives. Additives may adversely affect your engine's or transmission's performance and durability.

Changing the Oil and Filter

Always change the oil and filter according to the recommendations in the maintenance schedule. The oil and filter collect contaminants that can damage your engine if they are not removed regularly.

Changing the oil and filter requires special tools and access from underneath the vehicle. The vehicle should be raised on a service station-type hydraulic lift for this service. Unless you have the knowledge and proper equipment, you should have this maintenance done by a skilled mechanic.

1. Run the engine until it reaches normal operating temperature, then shut it off.

CONTINUED

Changing the Oil and Filter

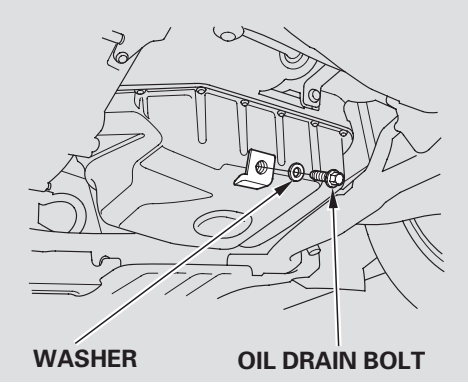

2. Open the hood and remove the engine oil fill cap. Remove the oil drain bolt and washer from the bottom of the engine. Drain the oil into an appropriate container.

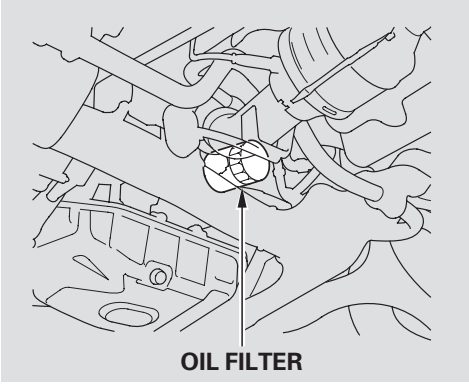

3. Remove the oil filter and let the remaining oil drain. A special wrench (available from your dealer) is required.

4. Install a new oil filter according to the instructions that come with it.

5. Put a new washer on the drain bolt, then reinstall the drain bolt. Tighten the drain bolt to :

   (RSX and Premium models)
   33 lbf·ft (44 N·m , 4.5 kgf·m)

   (Type-S)
   29 lbf·ft (39 N·m , 4.0 kgf·m)

6. Refill the engine with the recommended oil.

   Engine oil change capacity (including filter):

   RSX and Premium models
   4.4 US qt (4.2 ℓ)

   Type-S
   5.0 US qt (4.7 ℓ)

Changing the Oil and Filter, Engine Coolant

7. Replace the engine oil fill cap. Start the engine. The oil pressure indicator should go off within 5 seconds. If it does not, turn off the engine and check your work.

8. Let the engine run for several minutes, then check the drain bolt and oil filter for leaks.

9. Turn off the engine, let it sit for several minutes, then check the oil level on the dipstick. If necessary, add more oil.

NOTICE

Improper disposal of engine oil can be harmful to the environment. If you change your own oil, please dispose of the used oil properly. Put it in a sealed container, and take it to a recycling center. Do not discard it in a trash bin or dump it on the ground.

Adding Engine Coolant

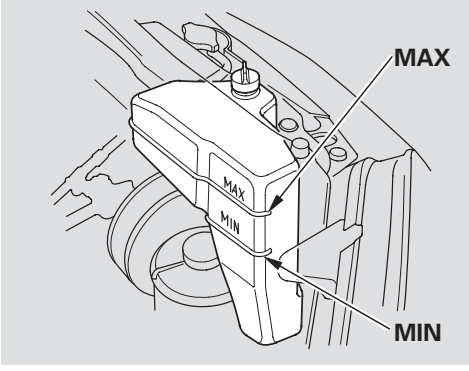

If the coolant level in the reserve tank is at or below the MIN line, add coolant to bring it up to the MAX line. Inspect the cooling system for leaks.

Always use Honda All Season Antifreeze/Coolant Type 2. This coolant is pre-mixed with 50 percent antifreeze and 50 percent water. Never add straight antifreeze or plain water.

If Honda antifreeze/coolant is not available, you may use another major-brand non-silicate coolant as a temporary replacement. Make sure it is a high-quality coolant recommended for aluminum engines. Continued use of any non-Honda coolant can result in corrosion, causing the cooling system to malfunction or fail. Have the cooling system flushed and refilled with Honda antifreeze/coolant as soon as possible.

CONTINUED

Engine Coolant

If the reserve tank is completely empty, you should also check the coolant level in the radiator.

⚠ WARNING

Removing the radiator cap while the engine is hot can cause the coolant to spray out, seriously scalding you.

Always let the engine and radiator cool down before removing the radiator cap.

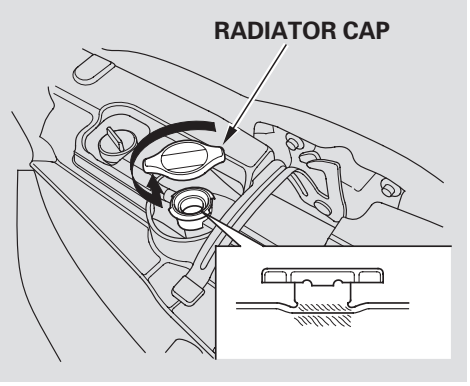

1. When the radiator and engine are cool, relieve any pressure in the cooling system by turning the radiator cap counterclockwise, without pressing down.

2. Remove the radiator cap by pushing down and turning counterclockwise.

3. The coolant level should be up to the base of the filler neck. Add coolant if it is low.

   Pour the coolant slowly and carefully so you do not spill. Clean up any spill immediately; it could damage components in the engine compartment.

4. Put the radiator cap on, and tighten it fully.

5. Pour coolant into the reserve tank. Fill it to halfway between the MAX and MIN marks. Put the cap on the reserve tank.

Do not add any rust inhibitors or other additives to your vehicle's cooling system. They may not be compatible with the coolant or engine components.

Windshield Washers, Automatic Transmission Fluid

Windshield Washers

Check the fluid level in the windshield washer reservoir at least monthly during normal use.

On Canadian models: The low washer level indicator will light when the level is low.

Fill the reservoir with a good-quality windshield washer fluid. This increases the cleaning capability and prevents freezing in cold weather.

When you refill the reservoir, clean the edges of the windshield wiper blades with windshield washer fluid on a clean cloth. This will help to condition them.

NOTICE

Do not use engine antifreeze or a vinegar/water solution in the windshield washer reservoir. Antifreeze can damage your vehicle's paint, while a vinegar/water solution can damage the windshield washer pump. Use only commercially-available windshield washer fluid.

Automatic Transmission Fluid

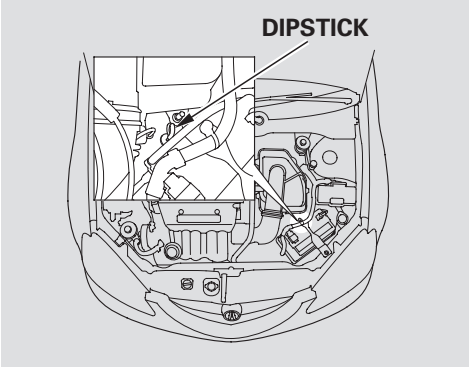

Check the fluid level with the engine at normal operating temperature.

1. Park the vehicle on level ground. Shut off the engine.

2. Remove the dipstick (yellow loop) from the transmission, and wipe it with a clean cloth.

CONTINUED

Automatic Transmission Fluid

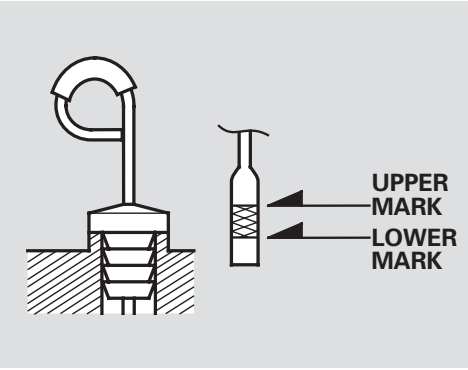

3. Insert the dipstick all the way into the transmission securely.

4. Remove the dipstick and check the fluid level. It should be between the upper and lower marks.

5. If the level is below the lower mark, remove the fill plug and add fluid to bring it to the upper mark.

   Pour the fluid slowly and carefully so you do not spill. Clean up any spill immediately; it could damage components in the engine compartment.

Always use Honda ATF-Z1 (Automatic Transmission Fluid). If it's not available, you may use a DEXRON® III automatic transmission fluid as a temporary replacement. However, continued use can affect the shift quality. Have the transmission flushed and refilled with Honda ATF-Z1 as soon as it is convenient.

To thoroughly flush the transmission, the technician should drain and refill it with Honda ATF-Z1, then drive the vehicle for a short distance. Do this three times. Then drain and refill the transmission a final time.

6. Insert the dipstick all the way back into the transmission securely as shown in the illustration.

The transmission should be drained and refilled with new fluid according to the time and distance recommendations in the maintenance schedule.

If you are not sure how to add fluid, contact your dealer.

Brake and Clutch Fluid

Check the fluid level in the reservoirs monthly.

Replace the brake fluid according to the time recommendation in the maintenance schedule.

Always use Honda Heavy Duty Brake Fluid DOT 3. If it is not available, you should use only DOT 3 or DOT 4 fluid, from a sealed container, as a temporary replacement.

Using any non-Honda brake fluid can cause corrosion and decrease the life of the system. Have the brake system flushed and refilled with Honda Heavy Duty Brake Fluid DOT 3 as soon as possible.

Brake fluid marked DOT 5 is not compatible with your vehicle's braking system and can cause extensive damage.

Brake System

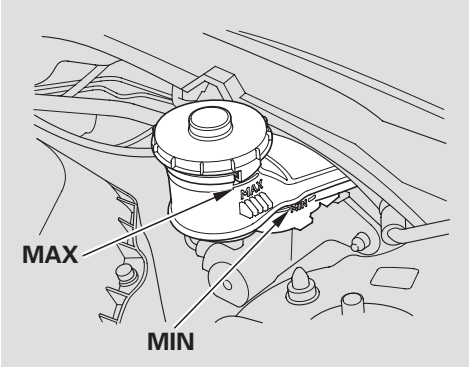

The fluid level should be between the MIN and MAX marks on the side of the reservoir. If the level is at or below the MIN mark, your brake system needs attention. Have the brake system inspected for leaks or worn brake pads.

Clutch System

Manual Transmission only

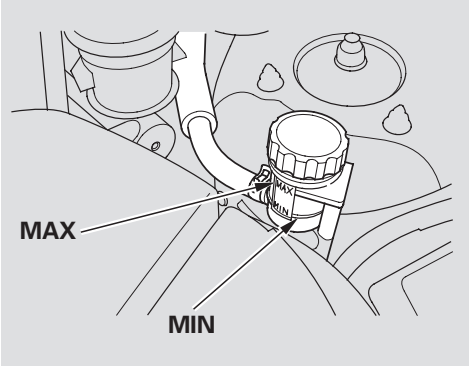

The fluid level should be between the MIN and MAX marks on the side of the reservoir. If it is not, add brake fluid to bring it up to that level. Use the same fluid specified for the brake system.

Low fluid level can indicate a leak in the clutch system. Have this system inspected as soon as possible.

Drive Belts

Drive Belts

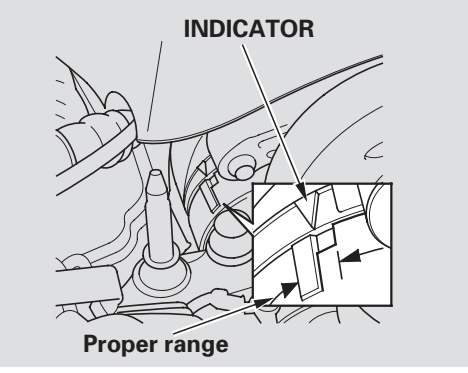

An auto-tensioner adjusts the tension of the drive belt. The indicator on the auto-tensioner should be in the proper range. It should be checked according to the time and distance recommendations in the maintenance schedule.

If the indicator is not within the proper range, have the drive belt replaced by your dealer as soon as possible.

Power Steering Fluid

Power Steering Fluid

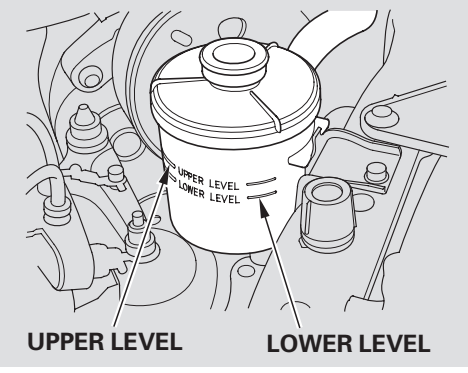

Check the level on the side of the reservoir when the engine is cold. The fluid should be between the UPPER LEVEL and LOWER LEVEL. If not add power steering fluid to the UPPER LEVEL mark.

Pour the fluid slowly and carefully so you do not spill. Clean up any spill immediately; it could damage components in the engine compartment.

Always use Honda Power Steering Fluid. You may use another power steering fluid as an emergency replacement, but have the power steering system flushed and refilled with Honda PSF as soon as possible.

A low power steering fluid level can indicate a leak in the system. Check the fluid level frequently, and have the system inspected as soon as possible.

NOTICE

Turning the steering wheel to full left or right lock and holding it there can damage the power steering pump.

NOTICE

Do not spill the power steering fluid over the body, auto-tensioner, drive belt and pulleys.
If spilled accidentally, wipe off any fluid completely.

Headlight Aiming

The headlights were properly aimed when your vehicle was new. If you regularly carry heavy items in the cargo area or pull a trailer, readjustment may be required. Adjustment should be done by your dealer or other qualified mechanic.

Replacing a Headlight Bulb

Your vehicle uses halogen headlight bulbs. When replacing a bulb, handle it by its plastic case and protect the glass from contact with your skin or hard objects. If you touch the glass, clean it with denatured alcohol and a clean cloth.

NOTICE

Halogen headlight bulbs get very hot when lit. Oil, perspiration, or a scratch on the glass can cause the bulb to overheat and shatter.

Replacing a Low Beam Headlight Bulb

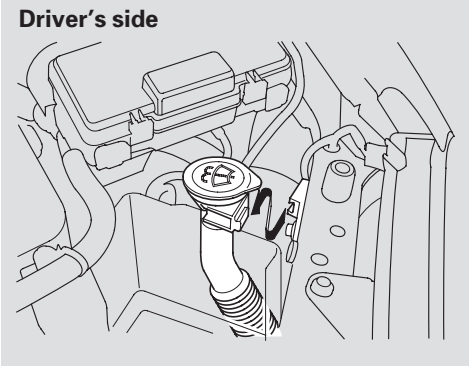

1. If you need to change the low beam headlight bulb on the driver's side, remove the neck of the windshield washer reservoir from the bracket by sliding it to the left.

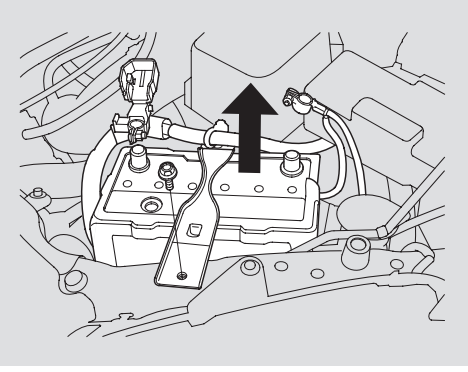

Then remove the bolt from the battery hold-down, and carefully push the battery toward the windshield to obtain enough working space.

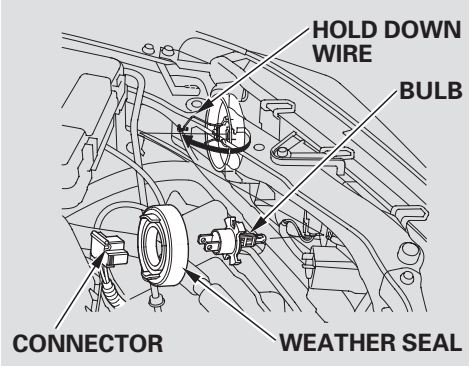

2. Remove the electrical connector from the bulb by pulling the connector straight back.

3. Remove the rubber weather seal by pulling on the tab.

4. Unclip the end of the hold-down wire from its slot. Pivot it out of the way, and remove the bulb.

5. Insert the new bulb into the hole, making sure the tabs are in their slots. Pivot the hold-down wire back in place, and clip the end into the slot.

6. Install the rubber seal and make sure it is right side up; it is marked "TOP."

7. Push the electrical connector onto the tabs of the new bulb. Make sure it locks in place. Turn on the headlights to test the new bulb.

8. ***Driver's Side***
   Install the neck of the windshield washer reservoir on the bracket.

   Pull the battery back to its original position, then install the bolt in the hold-down, and tighten it securely.

Replacing a High Beam Headlight Bulb

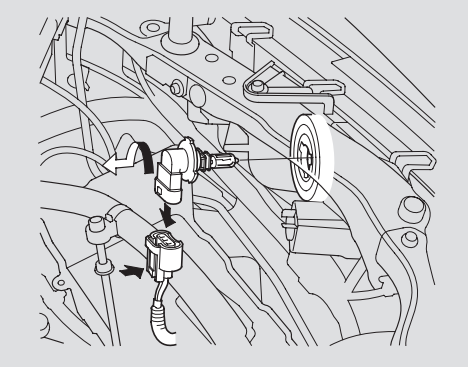

1. To change a high beam headlight bulb, remove the electrical connector from the bulb by pushing on the tab and pulling the connector down.

2. Remove the bulb by turning it one-quarter turn counterclockwise.

3. Insert the new bulb into the hole and turn it one-quarter turn clockwise to lock it in place.

4. Push the electrical connector back onto the bulb. Make sure it is on all the way.

5. Turn on the headlights to test the new bulb.

Replacing a Front Turn Signal Bulb

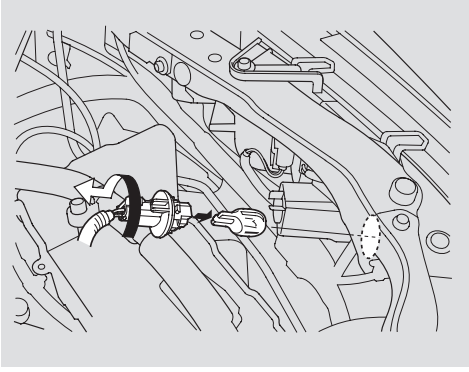

1. Remove the socket from the headlight assembly by turning it one-quarter turn counterclockwise.

2. Pull the bulb straight out of its socket. Push the new bulb straight into the socket until it bottoms.

3. Insert the socket into the headlight assembly. Turn it clockwise to lock it in place.

4. Test the lights to make sure the new bulb is working.

Replacing a Front Parking Light Bulb

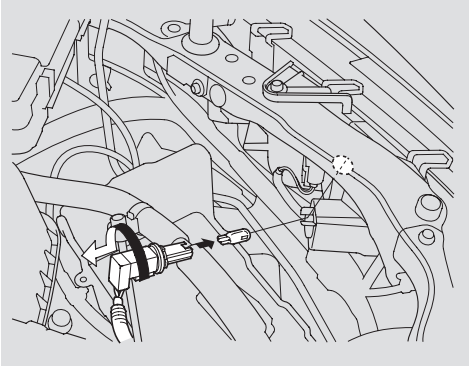

1. The front parking light bulb is above the high beam headlight bulb.

   Remove the socket from the headlight assembly by turning it one-quarter turn counterclockwise.

2. Pull the bulb straight out of its socket. Push the new bulb straight into the socket until it bottoms.

3. Insert the socket back into the headlight assembly. Turn it clockwise to lock it in place.

4. Turn on the parking lights and check that the new bulb is working.

Replacing a Front Side Marker Light Bulb

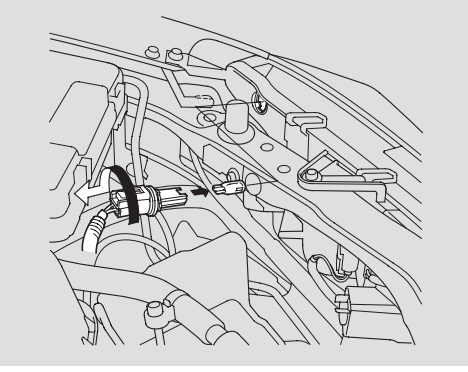

1. The front side marker light bulb is above the low beam headlight bulb.

   Remove the socket from the headlight assembly by turning it one-quarter turn counterclockwise.

2. Pull the bulb straight out of its socket. Push the new bulb straight into the socket until it bottoms.

3. Insert the socket back into the headlight assembly. Turn it clockwise to lock it in place.

4. Turn on the lights to make sure the new bulb is working.

Replacing a High-mount Brake Light Bulb

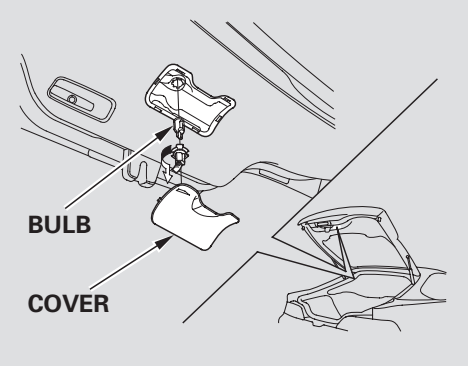

1. Open the hatch.
2. Remove the high-mount brake light cover by pivoting it toward the back of the vehicle.
3. Remove the socket by turning it one-quarter turn counterclockwise.
4. Pull the bulb straight out of its socket.
   Push the new bulb straight into the socket until it bottoms.
5. Insert the socket back into the light assembly. Turn it clockwise to lock it in place.
6. Test the lights to make sure the new bulb is working.
7. Reinstall the high-mount brake light cover.

Replacing Rear Bulbs

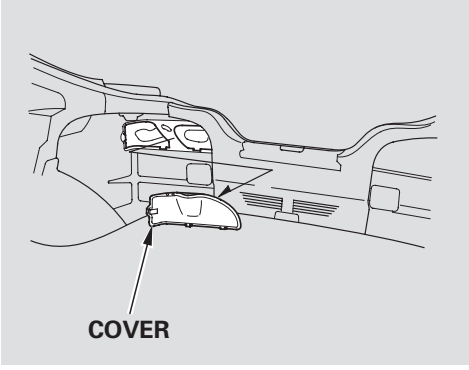

1. Open the hatch. Remove the light assembly cover by pulling on the tab on the outside edge.

CONTINUED

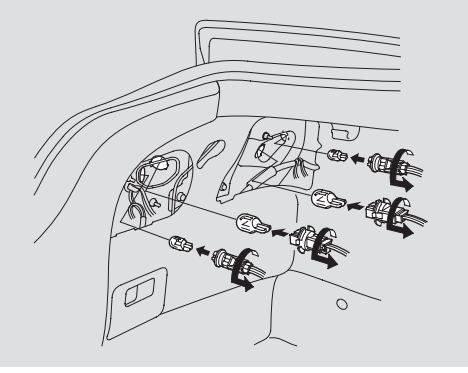

2. Determine which of the four bulbs is burned out: brake/taillight, turn signal light, side marker light, or back-up light.

3. Remove the socket by turning it one-quarter turn counterclockwise.

4. Pull the bulb straight out of its socket. Push the new bulb straight into the socket until it bottoms.

5. Reinstall the socket into the light assembly by turning it clockwise until it locks.

6. Test the lights to make sure the new bulb is working.

7. Install the light assembly cover. Make sure it locks in place.

Cleaning the Seat Belts, Floor Mats, Dust and Pollen Filter

Cleaning the Seat Belts

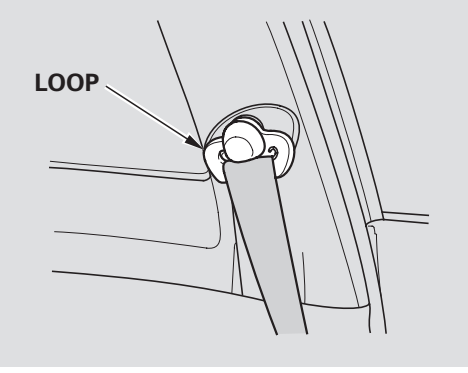

If your seat belts get dirty, use a soft brush with a mixture of mild soap and warm water to clean them. Do not use bleach, dye, or cleaning solvents. Let the belts air dry before you use the vehicle.
Dirt build-up in the loops of the seat belt anchors can cause the belts to retract slowly. Wipe the insides of the loops with a clean cloth dampened in mild soap and warm water or isopropyl alcohol.

Floor Mats

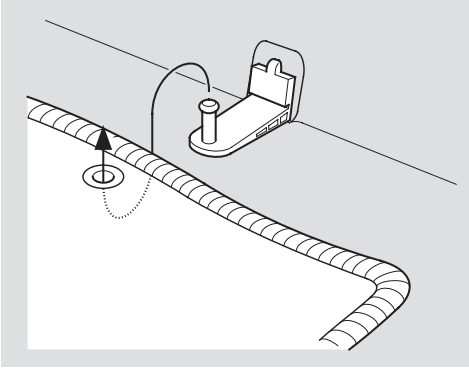

The driver's floor mat that came with your vehicle hooks over the floor mat anchor. This keeps the floor mat from sliding forward and possibly interfering with the pedals.

If you remove the driver's floor mat, make sure to re-anchor it when you put it back in your vehicle.

If you use an aftermarket floor mat, make sure it fits properly and that it can be used with the floor mat anchor. Do not put additional floor mats on top of the anchored mat.

Dust and Pollen Filter

This filter removes the dust and pollen that is brought in from the outside through the heating and cooling system.

Have your dealer replace this filter every 30,000 miles (48,000 km) under normal conditions. It should be replaced every 15,000 miles (24,000 km) if you drive primarily in urban areas that have high concentrations of soot in the air, or if the airflow from the heating and cooling system is less than usual.

Wiper Blades

Check the condition of the wiper blades at least every six months. Look for signs of cracking in the rubber, or areas that are getting hard. Replace the blades if you find these signs, or if they leave streaks and unwiped areas when used.

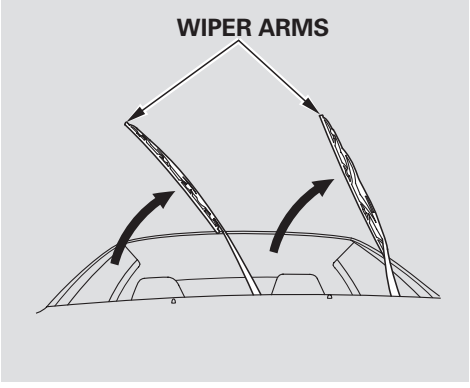

To replace a blade (front or rear):

1. Raise the wiper arm off the windshield or rear window.

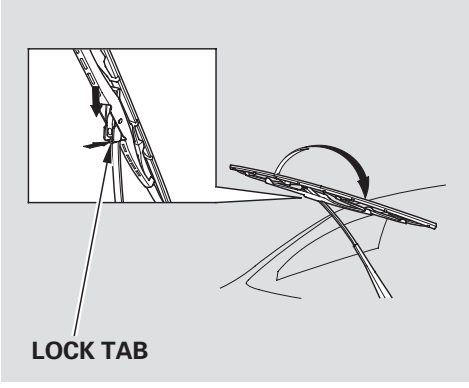

2. Disconnect the blade assembly from the wiper arm by pushing in the lock tab. Hold the lock tab in while you push the blade assembly toward the base of the arm.

Wiper Blades

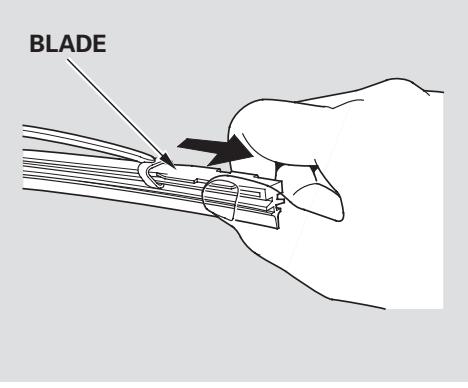

3. Remove the blade from its holder by grasping the tabbed end of the blade. Pull firmly until the tabs come out of the holder.

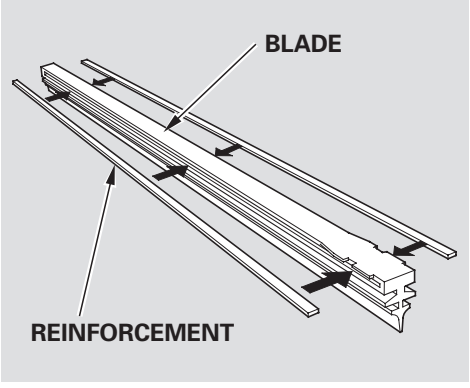

4. Examine the new wiper blades. If they have no plastic or metal reinforcement along the back edge, remove the metal reinforcement strips from the old wiper blade, and install them in the slots along the edge of the new blade.

5. Slide the new wiper blade into the holder until the tabs lock.

6. Slide the wiper blade assembly onto the wiper arm. Make sure it locks in place.

7. Lower the wiper arm down against the windshield or rear window.

Tires

To safely operate your vehicle, your tires must be the proper type and size, in good condition with adequate tread, and correctly inflated.

The following pages give more detailed information on how to take care of your tires and what to do when they need to be replaced.

⚠ WARNING

Using tires that are excessively worn or improperly inflated can cause a crash in which you can be seriously hurt or killed.

Follow all instructions in this owner's manual regarding tire inflation and maintenance.

Inflation Guidelines

Keeping the tires properly inflated provides the best combination of handling, tread life, and riding comfort.

- Underinflated tires wear unevenly, adversely affect handling and fuel economy, and are more likely to fail from being overheated.
- Overinflated tires can make your vehicle ride more harshly, are more prone to damage from road hazards, and wear unevenly.

We recommend that you visually check your tires every day. If you think a tire might be low, check it immediately with a tire gauge.

Use a gauge to measure the air pressure in each tire at least once a month. Even tires that are in good condition may lose one to two psi (10 to 20 kPa, 0.1 to 0.2 kgf/cm^2) per month. Remember to check the spare tire at the same time.

Check the air pressures when the tires are cold. This means the vehicle has been parked for at least three hours, or driven less than 1 mile (1.6 km). Add or release air, if needed, to match the recommended cold tire pressures on the next page.

If you check air pressures when the tires are hot (driven for several miles), you will see readings 4 to 6 psi (30 to 40 kPa, 0.3 to 0.4 kgf/cm²) higher than the cold readings. This is normal. Do not let air out to match the recommended cold air pressure. The tire will be underinflated.

You should get your own tire pressure gauge and use it whenever you check your tire pressures. This will make it easier for you to tell if a pressure loss is due to a tire problem and not due to a variation between gauges.

While tubeless tires have some ability to self-seal if they are punctured, you should look closely for punctures if a tire starts losing pressure.

Recommended Tire Pressures

Normal Driving

The following charts show the recommended cold tire pressures for most normal driving conditions and speeds.

(Canada: Standard model)

Tire Size	Cold Tire Pressure for Normal Driving
P195/65R15 89H	Front: 31 psi (220 kPa , 2.2 kgf/cm²) Rear: 31 psi (220 kPa , 2.2 kgf/cm²)

(U.S.: Base models, Canada: Premium models)

Tire Size	Cold Tire Pressure for Normal Driving
P205/55R16 89V	Front: 31 psi (220 kPa , 2.2 kgf/cm²) Rear: 31 psi (220 kPa , 2.2 kgf/cm²)

(Type-S model)

Tire Size	Cold Tire Pressure for Normal Driving
P215/45R17 87V	Front: 31 psi (220 kPa , 2.2 kgf/cm²) Rear: 31 psi (220 kPa , 2.2 kgf/cm²)

The compact spare tire pressure is: 60 psi (420 kPa , 4.20 kgf/cm²)

CONTINUED

High-Speed Driving

Type-S model

We strongly recommend that you do not drive faster than posted speed limits and conditions allow. If you decide it is safe to drive at high speeds (over 137 mph or 220 km/h) be sure to adjust the cold pressures as shown below. If you do not, excessive heat can build up and cause sudden tire failure.

(Type-S model)

Tire Size	Cold Tire Pressure for Normal Driving
P215/45R17 87V	Front: 34 psi (230 kPa , 2.3 kgf/cm²) Rear: 34 psi (230 kPa , 2.3 kgf/cm²)

Except Type-S model

Tire pressure for high-speed driving is the same as for normal driving.

When you return to normal speed driving, be sure to readjust the tire pressure for normal driving. You should wait until the tires are cold before adjusting the tire pressure.

For convenience the recommended tire sizes and cold air pressures are on a label on the driver's doorjamb. For additional information about your tires, see page 220 .

Tire Inspection

Every time you check inflation, you should also examine the tires for damage, foreign objects, and wear.

You should look for:

- Bumps or bulges in the tread or side of the tire. Replace the tire if you find either of these conditions.
- Cuts, splits, or cracks in the side of the tire. Replace the tire if you can see fabric or cord.
- Excessive tread wear.

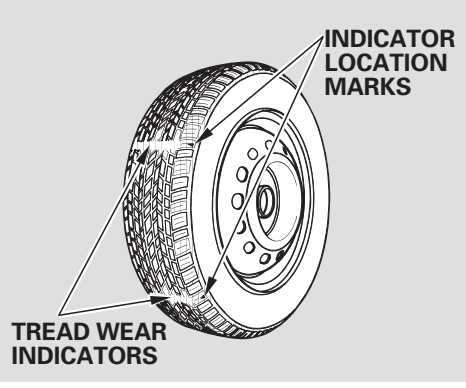

Your tires have wear indicators molded into the tread. When the tread wears down, you will see a band 1/2 inch (12.7 mm) wide across the tread. This shows there is less than 1/16 inch (1.6 mm) of tread left on the tire.

A tire this worn gives very little traction on wet roads. You should replace the tire if you can see three or more tread wear indicators.

Tire Maintenance

In addition to proper inflation, correct wheel alignment helps to decrease tire wear. If you find a tire is worn unevenly, have your dealer check the wheel alignment.

Have your dealer check the tires if you feel a consistent vibration while driving. A tire should always be rebalanced if it is removed from the wheel. When you have new tires installed, make sure they are balanced. This increases riding comfort and tire life. For best results, have the installer perform a dynamic balance.

For Vehicles with aluminum wheels:

NOTICE

Improper wheel weights can damage your vehicle's aluminum wheels. Use only Acura wheel weights for balancing.

Tire Rotation

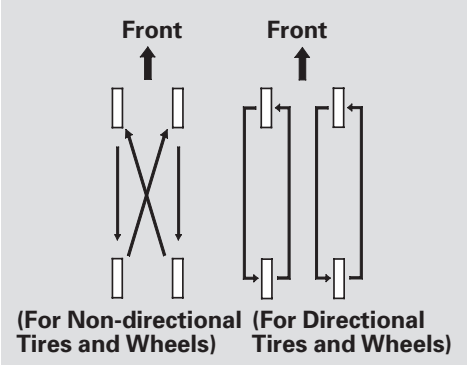

To help increase tire life and distribute wear more evenly, rotate the tires every 7,500 miles (12,000 km). Move the tires to the positions shown in the chart each time they are rotated. If you purchase directional tires, rotate only front-to-back.

Replacing Tires and Wheels

Replace your tires with radial tires of the same size, load range, speed rating, and maximum cold tire pressure rating (as shown on the tire's sidewall).

Mixing radial and bias-ply tires on your vehicle can reduce braking ability, traction, and steering accuracy. Using tires of a different size or construction can cause the ABS to work inconsistently.

It is best to replace all four tires at the same time. If that is not possible or necessary, replace the two front tires or two rear tires as a pair. Replacing just one tire can seriously affect your vehicle's handling.

If you ever replace a wheel, make sure that the wheel's specifications match those of the original wheels. Replacement wheels are available at your dealer.

⚠ WARNING

Installing improper tires on your vehicle can affect handling and stability. This can cause a crash in which you can be seriously hurt or killed.

Always use the size and type of tires recommended in this owner's manual.

Wheel and Tire Specifications

Wheels:
(Canada: Standard model)
15 x 6 JJ

(U.S.: Base model, Canada: Premium models)
16 x 6 1/2 JJ

(Type-S models)
17 x 7 JJ

Tires:
(Canada: Standard model)
P195/65R15 89H

(U.S.: Base model, Canada: Premium models)
P205/55R16 89V

(Type-S models)
P215/45R17 87V

See page 220 for information about DOT Tire Quality Grading and page 222 for tire size explanation.

Winter Driving

Tires marked “M + S” or “All Season” on the sidewall have an all-weather tread design suitable for most winter driving conditions.

For the best performance in snowy or icy conditions, you should install snow tires or tire chains. They may be required by local laws under certain conditions.

Snow Tires

If you mount snow tires on your vehicle, make sure they are radial tires of the same size and load range as original tires. Mount snow tires on all four wheels. The traction provided by snow tires on dry roads may be lower than your original tires. Check with the tire dealer for maximum speed recommendations.

Tire Chains

Because your vehicle has limited tire clearance, mount only SAE Class “S” cable-type traction devices, with rubber chain tensioners on the front tires. Use traction devices only when required by driving conditions or local laws. Make sure they are the correct size for your tires. Make link-type “chains” should not be used.

When installing cables, follow the manufacturer’s instructions, and mount them as tight as you can. Make sure they are not contacting the brake lines or suspension. Drive slowly with them installed. If you hear them coming into contact with the body or chassis, stop and investigate. Remove them as soon as you begin driving on cleared roads.

NOTICE

Traction devices that are the wrong size or improperly installed can damage your vehicle’s brake lines, suspension, body, and wheels. Stop driving if they are hitting any part of the vehicle.

Checking the Battery

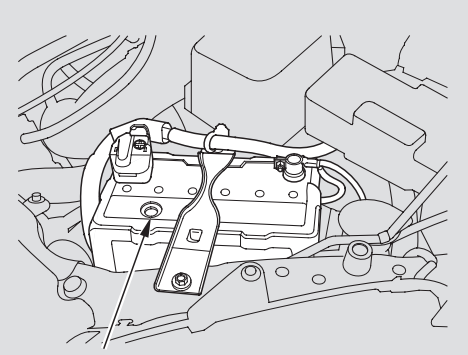

Check the condition of the battery monthly by looking at the test indicator window. The label on the battery explains the test indicator's colors.

Check the terminals for corrosion (a white or yellowish powder). To remove it, cover the terminals with a solution of baking soda and water. It will bubble up and turn brown. When this stops, wash it off with plain water. Dry off the battery with a cloth or paper towel. Coat the terminals with grease to help prevent further corrosion.

If additional battery maintenance is needed, see your dealer or a qualified technician.

WARNING: Battery posts, terminals, and related accessories contain lead and lead compounds. **Wash your hands after handling.**

If your vehicle's battery is disconnected or goes dead, your driver's power window loses its calibration and must be reprogrammed (see page 78), and your audio system will disable itself. The next time you turn on the radio you will see " CODE " in the frequency display. Use the Preset buttons to enter the five-digit code (see page 112).

If you need to connect the battery to a charger, disconnect both cables to prevent damaging your vehicle's electrical system. Always disconnect the negative (−) cable first, and reconnect it last.

⚠ WARNING

The battery gives off explosive hydrogen gas during normal operation.

A spark or flame can cause the battery to explode with enough force to kill or seriously hurt you.

Wear protective clothing and a face shield, or have a skilled mechanic do the battery maintenance.

Vehicle Storage

If you need to park your vehicle for an extended period (more than one month), there are several things you should do to prepare it for storage. Proper preparation helps prevent deterioration and makes it easier to get your vehicle back on the road. If possible, store your vehicle indoors.

- Fill the fuel tank.
- Change the engine oil and filter.
- Wash and dry the exterior completely.
- Clean the interior. Make sure the carpeting, floor mats, etc., are completely dry.
- Leave the parking brake off. Put the transmission in Reverse (manual) or Park (automatic).
- Block the rear wheels.
- If the vehicle is to be stored for a longer period, it should be supported on jackstands so the tires are off the ground.
- Leave one window open slightly (if the vehicle is being stored indoors).
- Disconnect the battery.
- Support the front and rear wiper blade arms with a folded towel or rag so they do not touch the windshield.
- To minimize sticking, apply a silicone spray lubricant to all door and hatch seals. Also, apply a body wax to the painted surfaces that mate with the door and hatch seals.
- Cover the vehicle with a “breathable” cover, one made from a porous material such as cotton. Non-porous materials, such as plastic sheeting, trap moisture, which can damage the paint.
- If possible, periodically run the engine until it reaches full operating temperature (the cooling fan cycles twice). Preferably, do this once a month.

If you store your vehicle for 12 months or longer, have your dealer perform the inspections called for in the 24 months/30,000 miles (48,000 km) Maintenance Schedule (Normal Conditions) as soon as you take it out of storage (see page 157). The replacements called for in the maintenance schedule are not needed unless the vehicle has actually reached that time or mileage.

Taking Care of the Unexpected

This section covers the more common problems that motorists experience with their vehicles. It gives you information about how to safely evaluate the problem and what to do to correct it. If the problem has stranded you on the side of the road, you may be able to get going again. If not, you will also find instructions on getting your vehicle towed.

Compact Spare Tire 192
Changing a Flat Tire 193
If the Engine Won't Start 198
Jump Starting 200
If the Engine Overheats 202
Low Oil Pressure Indicator 204
Charging System Indicator 204
Malfunction Indicator Lamp 205
Brake System Indicator 206
Closing the Moonroof 207
Fuses 208
  Fuse Locations 211
Emergency Towing 213

Compact Spare Tire

Use the compact spare tire as a temporary replacement only. Get your regular tire repaired or replaced, and put it back on your vehicle as soon as you can.

Check the inflation pressure of the compact spare tire every time you check the other tires. It should be inflated to:
60 psi (420 kPa , 4.20 kgf/cm²)

Follow these precautions:

- Never exceed 50 mph (80 km/h) under any circumstances.
- This tire gives a harsher ride and less traction on some road surfaces. Use greater caution while driving.
- Do not mount snow chains on the compact spare tire.
- Do not use your compact spare tire on another vehicle unless it is the same make and model.

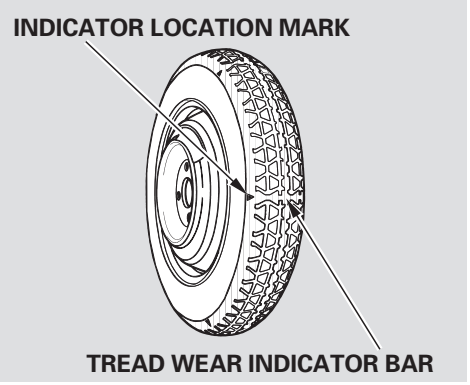

Replace the tire when you can see the tread wear indicator bars. The replacement should be the same size and design tire, mounted on the same wheel. The spare tire is not designed to be mounted on a regular wheel, and the spare wheel is not designed for mounting a regular tire.

Changing a Flat Tire

If you have a flat tire while driving, stop in a safe place to change it. Drive slowly along the shoulder until you get to an exit or an area to stop that is far away from the traffic lanes.

⚠ WARNING

The vehicle can easily roll off the jack, seriously injuring anyone underneath.

Follow the directions for changing a tire exactly, and never get under the vehicle when it is supported only by the jack.

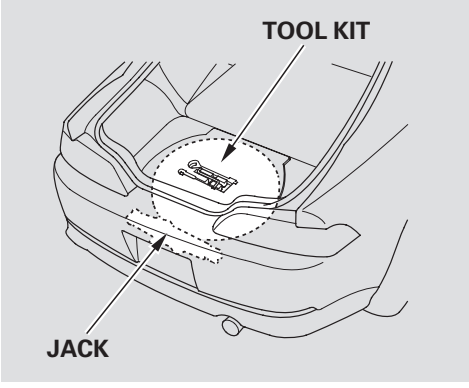

1. Park the vehicle on firm, level, and non-slippery ground. Put the transmission in Park (automatic) or Reverse (manual). Apply the parking brake. If you are towing a trailer, unhitch the trailer.
2. Turn on the hazard warning lights, and turn the ignition switch to LOCK (0). Have all the passengers get out of the vehicle while you change the tire.
3. Open the hatch. Pull up the floor mat and remove the spare tire cover.
4. Unscrew the wing bolt.

CONTINUED

Changing a Flat Tire

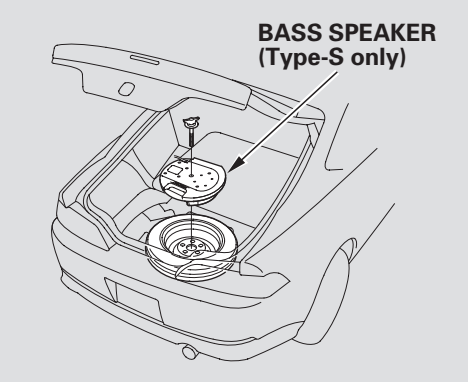

5. Type-S only:
   Lift the bass speaker out of the spare tire and set it aside. Do not pull on the wiring harness going to the speaker.

6. Take the spare tire out of its well.

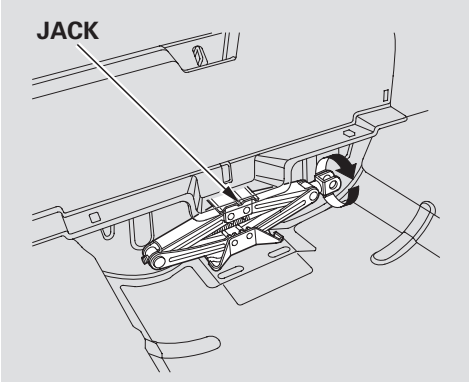

7. Turn the jack's end counterclockwise to loosen it, then remove the jack.

8. Loosen each wheel nut 1/2 turn with the wheel nut wrench.

Changing a Flat Tire

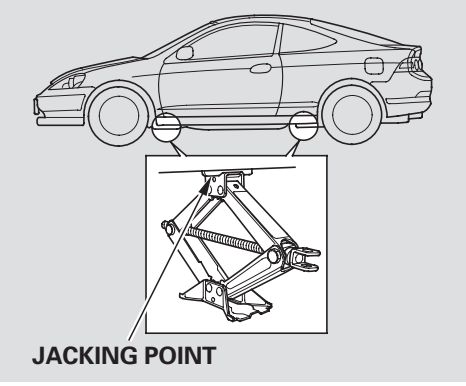

9. Place the jack under the jacking point. Turn the end bracket clockwise until the top of the jack contacts the jacking point. Make sure the jacking point tab is resting in the jack notch.

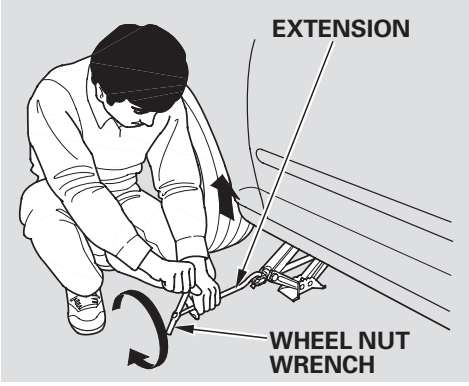

10. Use the extension and the wheel nut wrench as shown to raise the vehicle until the flat tire is off the ground.

11. Remove the wheel nuts, then remove the flat tire. Place the flat tire on the ground with the outside surface facing up.

12. Before mounting the spare tire, wipe any dirt off the mounting surface of the wheel and hub with a clean cloth. Wipe the hub carefully; it may be hot from driving.

CONTINUED

Changing a Flat Tire

13. Put on the spare tire. Put the wheel nuts back on finger-tight, then tighten them in a crisscross pattern with the wheel nut wrench until the wheel is firmly against the hub. Do not try to tighten them fully.

14. Lower the vehicle to the ground and remove the jack.

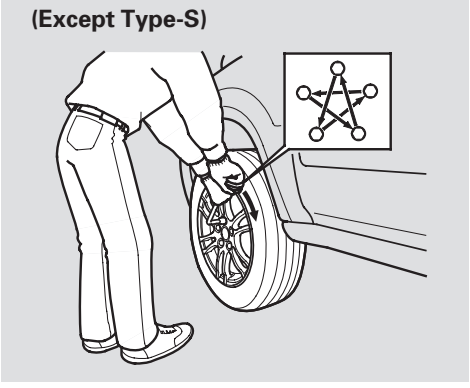

15. Tighten the wheel nuts securely in the same crisscross pattern. Have the wheel nut torque checked at the nearest automotive service facility.
Tighten the wheel nuts to:
80 lbf·ft (108 N·m , 11 kgf·m)

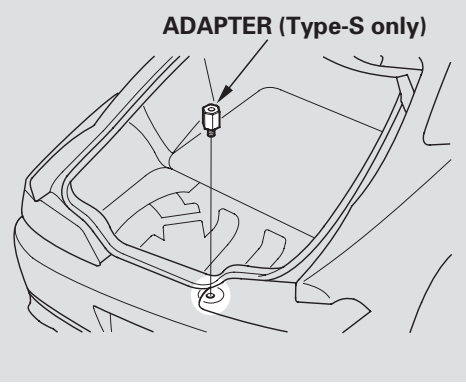

16. Store the jack in its holder. Turn the jack's end bracket clockwise to raise the jack and lock it in place.

17. Type-S only:
Screw the adapter into the hole in the spare tire well.

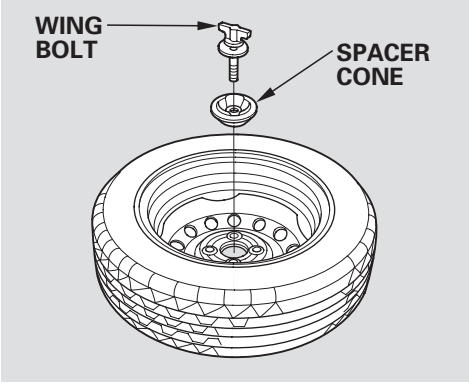

18. Remove the wheel cover or center cap and place the flat tire face down in the spare tire well.

19. All except Type-S:
Remove the spacer cone from the wing bolt, turn it over, and put it back on the bolt.

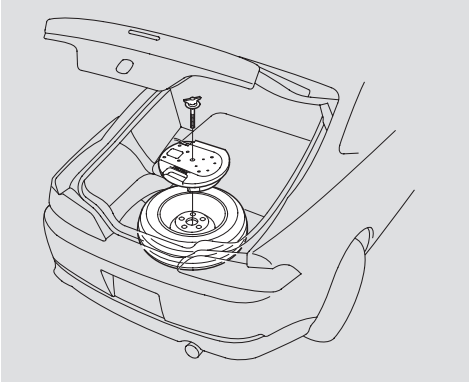

20. Type-S only:
Set the bass speaker inside the wheel.

21. Secure the flat tire with the wing bolt.

CONTINUED

22. Store the tool kit.

⚠ WARNING

Loose items can fly around the interior in a crash and could seriously injure the occupants.

Store the wheel, jack, and tools securely before driving.

23. Store the wheel cover or center cap in the cargo area. Make sure it will not get scratched or damaged.

24. Reinstall the floor mat and spare tire cover, then close the hatch.

If the Engine Won't Start

Diagnosing why the engine won't start falls into two areas, depending on what you hear when you turn the key to START (III):

- You hear nothing, or almost nothing. The engine's starter motor does not operate at all, or operates very slowly.
- You can hear the starter motor operating normally, or the starter motor sounds like it is spinning faster than normal, but the engine does not start up and run.

Nothing Happens or the Starter Motor Operates Very Slowly

When you turn the ignition switch to START (III), you do not hear the normal noise of the engine trying to start. You may hear a clicking sound or series of clicks, or nothing at all. Check these things:

- Check the transmission interlock. If you have a manual transmission, the clutch pedal must be pushed all the way to the floor or the starter will not operate. With an automatic transmission, it must be in Park or Neutral.
- Turn the ignition switch to ON (II). Turn on the headlights, and check their brightness. If the headlights are very dim or do not come on at all, the battery is discharged. See **Jump Starting** on page 200 .

If the Engine Won't Start

- Turn the ignition switch to START (III). If the headlights do not dim, check the condition of the fuses. If the fuses are OK, there is probably something wrong with the electrical circuit for the ignition switch or starter motor. You will need a qualified technician to determine the problem (see **Emergency Towing** on page 213).

- If the headlights dim noticeably or go out when you try to start the engine, either the battery is discharged or the connections are corroded. Check the condition of the battery and terminal connections (see page 188). You can then try jump starting the vehicle from a booster battery (see page 200).

The Starter Operates Normally
In this case, the starter motor's speed sounds normal, or even faster than normal, when you turn the ignition switch to START (III), but the engine does not run.

- Are you using a properly coded key? An improperly coded key will cause the immobilizer system indicator in the instrument panel to blink rapidly (see page 65).

- Are you using the proper starting procedure? Refer to **Starting the Engine** on page 135 .

- Do you have fuel? Check the fuel gauge; the low fuel indicator may not be working.

- There may be an electrical problem, such as no power to the fuel pump. Check all the fuses (see page 208).

If you find nothing wrong, you will need a qualified technician to find the problem. See **Emergency Towing** on page 213 .

Jump Starting

Although this seems like a simple procedure, you should take several precautions.

⚠ WARNING

A battery can explode if you do not follow the correct procedure, seriously injuring anyone nearby.

Keep all sparks, open flames, and smoking materials away from the battery.

You cannot start your vehicle with an automatic transmission by pushing or pulling it.

To jump start your vehicle:

1. Open the hood, and check the physical condition of the battery. In very cold weather, check the condition of the electrolyte. If it seems slushy or frozen, do not try jump starting until it thaws.

NOTICE

If a battery sits in extreme cold, the electrolyte inside can freeze. Attempting to jump start with a frozen battery can cause it to rupture.

2. Turn off all the electrical accessories: heater, A/C, audio system, lights, etc.

   Put the transmission in Neutral (manual) or Park (automatic), and set the parking brake.

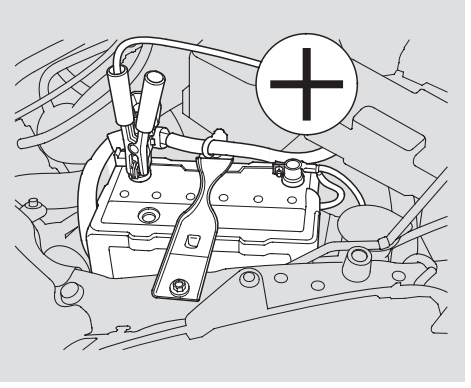

3. Connect one jumper cable to the positive (+) terminal on your battery. Connect the other end to the positive (+) terminal on the booster battery.

Jump Starting

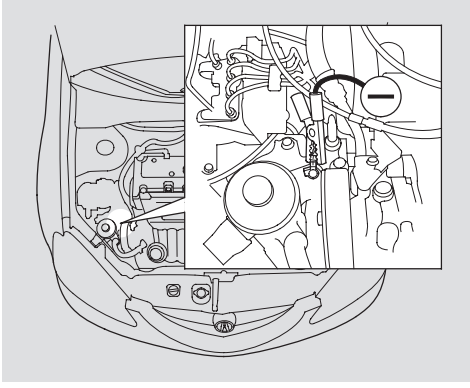

4. Connect the second jumper cable to the negative (−) terminal on the booster battery. Connect the other end to the grounding strap as shown. Do not connect this jumper cable to any other part of the engine.

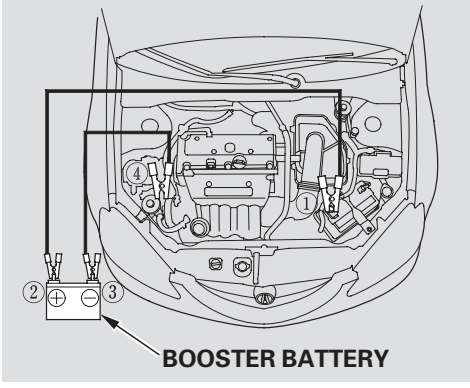

The numbers in the illustration show you the order to connect the jumper cables.

5. If the booster battery is in another vehicle, have an assistant start that vehicle and run it at a fast idle.

6. Start your vehicle. If the starter motor still operates slowly, check that the jumper cables have good metal-to-metal contact.

7. Once the vehicle is running, disconnect the negative cable from the grounding strap on your vehicle, then from the booster battery. Disconnect the positive cable from your vehicle, then from the booster battery.

Keep the ends of the jumper cables away from each other and any metal on the vehicle until everything is disconnected. Otherwise, you may cause an electrical short.

If the Engine Overheats

The pointer of the vehicle's temperature gauge should stay in the midrange. If it climbs to the red mark, you should determine the reason (hot day, driving up a steep hill, etc.).

If your vehicle overheats, you should take immediate action. The only indication may be the temperature gauge climbing to or above the red mark. Or you may see steam or spray coming from under the hood.

NOTICE

Driving with the temperature gauge pointer at the red mark can cause serious damage to your engine.

⚠ WARNING

Steam and spray from an overheated engine can seriously scald you.

Do not open the hood if steam is coming out.

1. Safely pull to the side of the road. Put the transmission in Neutral (manual) or Park (automatic), and set the parking brake. Turn off all the accessories, and turn on the hazard indicators.
2. If you see steam and/or spray coming from under the hood, turn off the engine. Wait until you see no more signs of steam or spray, then open the hood.
3. If you do not see steam or spray, leave the engine running, and watch the temperature gauge. If the high heat is due to overloading, the engine should start to cool down almost immediately. If it does, wait until the temperature gauge comes down to the midpoint, then continue driving.
4. If the temperature gauge stays at the red mark, turn off the engine.

5. Look for any obvious coolant leaks, such as a split radiator hose. Everything is still extremely hot, so use caution. If you find a leak, it must be repaired before you continue driving (see **Emergency Towing** on page 213).

6. If you don't find an obvious leak, check the coolant level in the radiator reserve tank (see page 125).

7. If there was no coolant in the reserve tank, you may need to add coolant to the radiator. Let the engine cool down until the pointer reaches the middle of the temperature gauge, or lower, before checking the radiator.

⚠ WARNING

Removing the radiator cap while the engine is hot can cause the coolant to spray out, seriously scalding you.

Always let the engine and radiator cool down before removing the radiator cap.

8. Using gloves or a large heavy cloth, turn the radiator cap counterclockwise, without pushing down, to the first stop. After the pressure releases, push down on the cap, and turn it until it comes off.

9. Start the engine, and set the temperature control dial to maximum. Add coolant to the radiator up to the base of the filler neck. If you do not have the proper coolant mixture available, you can add plain water. Remember to have the cooling system drained and refilled with the proper mixture as soon as you can.

10. Put the radiator cap back on tightly. Run the engine, and watch the temperature gauge. If it goes back to the red mark, the engine needs repair (see **Emergency Towing** on page 213).

11. If the temperature stays normal, check the coolant level in the radiator reserve tank. If it has gone down, add coolant to the MAX mark. Put the cap back on tightly.

Low Oil Pressure Indicator, Charging System Indicator

Low Oil Pressure Indicator

This indicator should never come on when the engine is running. If it starts flashing or stays on, the oil pressure has dropped very low. Serious engine damage is possible and you should take immediate action.

NOTICE

Running the engine with low oil pressure can cause serious mechanical damage almost immediately. Turn off the engine as soon as you can safely get the vehicle stopped.

1. Safely pull off the road, and shut off the engine. Turn on the hazard warning indicators.

2. Let the vehicle sit for a minute. Open the hood, and check the oil level (see page 125). An engine very low on oil can lose pressure during cornering and other driving maneuvers.

3. If necessary, add oil to bring the level back to the full mark on the dipstick (see page 162).

4. Start the engine, and watch the oil pressure indicator. If it does not go out within 10 seconds, turn off the engine. There is a mechanical problem that needs to be repaired before you can continue driving (see **Emergency Towing** on page 213).

Charging System Indicator

If the charging system indicator comes on brightly when the engine is running, the battery is not being charged.

Immediately turn off all electrical accessories. Try not to use other electrically operated controls such as the power windows. Keep the engine running; starting the engine will discharge the battery rapidly.

Go to a service station or garage where you can get technical assistance.

Malfunction Indicator Lamp

If the indicator comes on while driving, it means one of the engine's emissions control systems may have a problem. Even though you may feel no difference in your vehicle's performance, it can reduce your fuel economy and cause increased emissions. Continued operation may cause serious damage.

If you have recently refueled your vehicle, the indicator coming on could be due to a loose or missing fuel fill cap. Tighten the cap until it clicks at least three times. Tightening the cap will not turn the indicator off immediately; it takes at least three days of normal driving.

If the indicator comes on repeatedly, even though it may turn off as you continue driving, have the vehicle checked by your dealer as soon as possible.

NOTICE

If you keep driving with the malfunction indicator lamp on, you can damage your vehicle's emissions controls and engine. Those repairs may not be covered by your vehicle's warranties.

Readiness Codes

Your vehicle has certain "readiness codes" that are part of the on-board diagnostics for the emissions systems. In some states, part of the emissions testing is to make sure these codes are set. If they are not set, the test cannot be completed.

If your vehicle battery has been disconnected or gone dead, these codes are erased. It takes at least three days of driving under various conditions to set the codes again.

To check if they are set, turn the ignition switch to ON (II), without starting the engine. The Malfunction Indicator Lamp will come on for 20 seconds. If it then goes off, the readiness codes are set. If it blinks 5 times, the readiness codes are not set. If possible, do not take your vehicle for a state emissions test until the readiness codes are set. Refer to State Emissions Testing for more information (see page 226).

Brake System Indicator

U.S. BRAKE | Canada (!)

The brake system indicator normally comes on when you turn the ignition switch to ON (II), and as a reminder to check the parking brake. It will stay on if you do not fully release the parking brake.

If the brake system indicator comes on while driving, the brake fluid level is probably low in the reservoir. Press lightly on the brake pedal to see if it feels normal. If it does, check the brake fluid level the next time you stop at a service station (see page 169).

If the fluid level is low, take the vehicle to your dealer and have the brake system inspected for leaks or worn brake pads.

However, if the brake pedal does not feel normal, you should take immediate action. A problem in one part of the system's dual circuit design will still give you braking at two wheels. You will feel the brake pedal go down much farther before the vehicle begins to slow down, and you will have to press harder on the pedal.

Slow down by shifting to a lower gear, and pull to the side of the road when it is safe. Because of the long distance needed to stop, it is hazardous to drive the vehicle. You should have it towed and repaired as soon as possible (see **Emergency Towing** on page 213).

If you must drive the vehicle a short distance in this condition, drive slowly and carefully.

Closing the Moonroof

If equipped
If the electric motor will not close the moonroof, do the following:

1. Check the fuse for the moonroof motor (see page 211). If the fuse is blown, replace it with one of the same or lower rating.

2. Try closing the moonroof. If the new fuse blows immediately or the moonroof motor still does not operate, you can close the moonroof manually.

3. Get the moonroof wrench out of the tool kit in the cargo area.

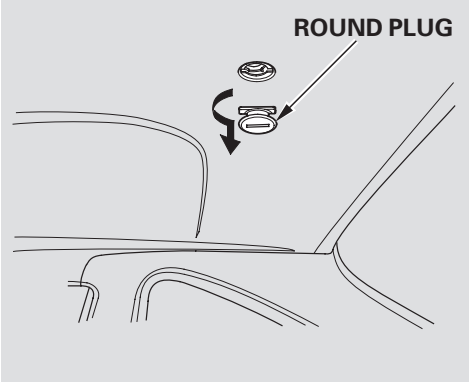

4. Use a screwdriver or coin to remove the round plug in the center of the headliner.

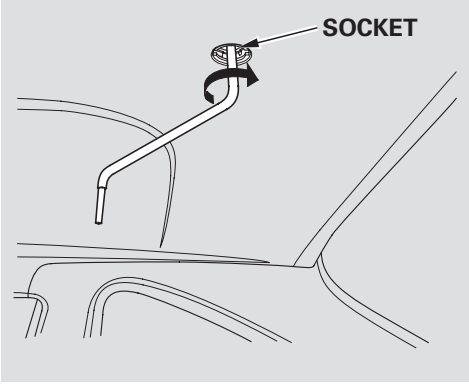

5. Insert the moonroof wrench into the socket behind this plug. Turn the wrench until the moonroof is fully closed.

6. Remove the wrench. Reinstall the round plug.

If you need to close the moonroof manually, it means the moonroof opening/closing function is developing a problem. Have your vehicle checked by your dealer.

Fuses

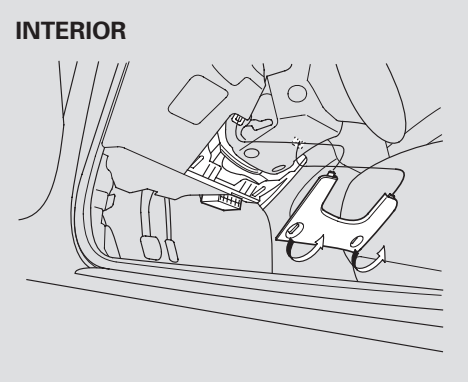

The vehicle's fuses are located in two fuse boxes. The interior fuse box is underneath the steering column.

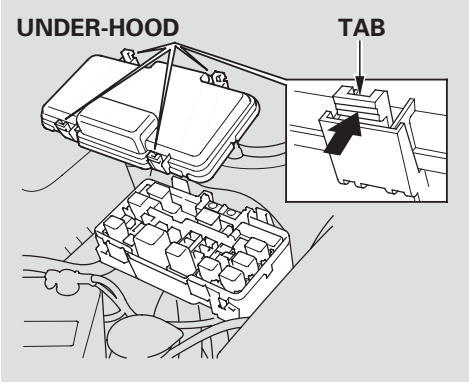

The under-hood fuse box is in the engine compartment next to the battery.

Checking and Replacing Fuses

If something electrical in your vehicle stops working, the first thing you should check for is a blown fuse. Determine from the chart on pages 211 and 212 , or the diagram on the fuse box lid, which fuse or fuses control that device. Check those fuses first, but check all the fuses before deciding that a blown fuse is the cause. Replace any blown fuses, and check if the device works.

1. Turn the ignition switch to LOCK (0). Make sure the headlights and all other accessories are off.

2. Remove the cover from the fuse box.

Fuses

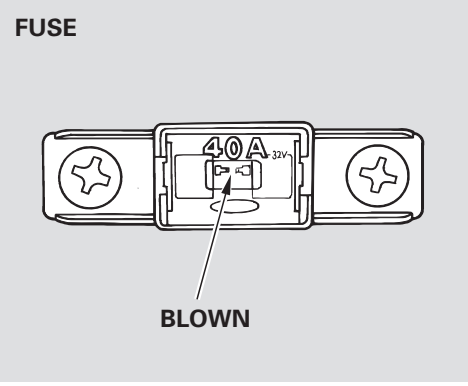

3. Check each of the large fuses in the under-hood fuse box by looking through the top at the wire inside. Removing these fuses requires a Phillips-head screw-driver.

4. Check the smaller fuses in the under-hood fuse box and all the fuses in the interior fuse box by pulling out each fuse with the fuse puller provided in the interior fuse box.

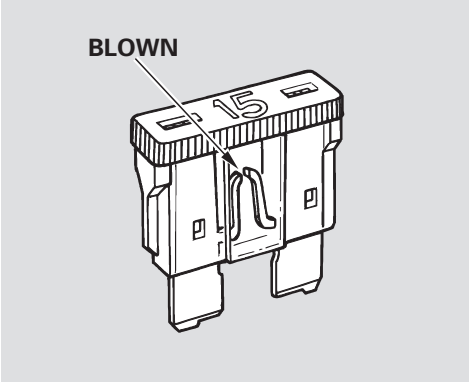

5. Look for a burned wire inside the fuse. If it is burned, replace it with one of the spare fuses of the same rating or lower.

CONTINUED

Fuses

If you cannot drive your vehicle without fixing the problem, and you do not have a spare fuse, take a fuse of the same rating or a lower rating from one of the other circuits. Make sure you can do without that circuit temporarily (such as the cigarette lighter or radio).

If you replace the blown fuse with a spare fuse that has a lower rating, it might blow out again. This does not indicate anything wrong. Replace the fuse with one of the correct rating as soon as you can.

NOTICE

Replacing a fuse with one that has a higher rating greatly increases the chances of damaging the electrical system. If you do not have a replacement fuse with the proper rating for the circuit, install one with a lower rating.

6. If the replacement fuse of the same rating blows in a short time, there is probably a serious electrical problem with your vehicle. Leave the blown fuse in that circuit, and have your vehicle checked by a qualified mechanic.

If the radio fuse is removed, the audio system will disable itself. The next time you turn on the radio you will see “Code” in the frequency display. Use the preset buttons to enter the five-digit code (see page 112).

INTERIOR FUSE BOX

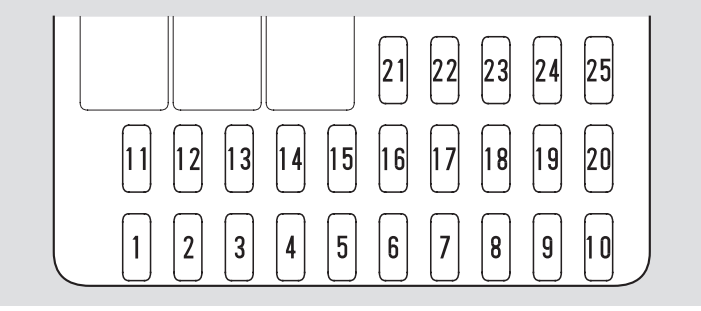

No.	Amps.	Circuits Protected
1	15A	Ignition Coil
2	20A	Laf Heater
3	10A	Daytime Running Lights*1 Rear Accessory Power Socket*2
4	10A	ACG (IG)
5	—	Not Used
6	7.5A	Power Window Relay
7	20A	Moonroof
8	7.5A	Radio
9	10A	Rear Wiper
10	7.5A	Gauge panel
11	7.5A	ABS
12	7.5A	Daytime Running Lights*1
13	10A	SRS
14	10A	Power Mirror
15	20A	Bass Speaker*3
16	20A	Heated Seats*1
17	15A	Fuel Pump
18	15A	Accessory Power Socket
19	7.5A	Turn Signal
20	20A	Front Wiper
21	—	Not Used
22	20A	Front Passenger's Power Window
23	20A	Driver's Power Window
24	—	Not Used
25	—	Not Used

*1 : Canadian models only
*2 : U. S. models only
*3 : Type-S only

CONTINUED

Fuse Locations

UNDER HOOD FUSE BOX

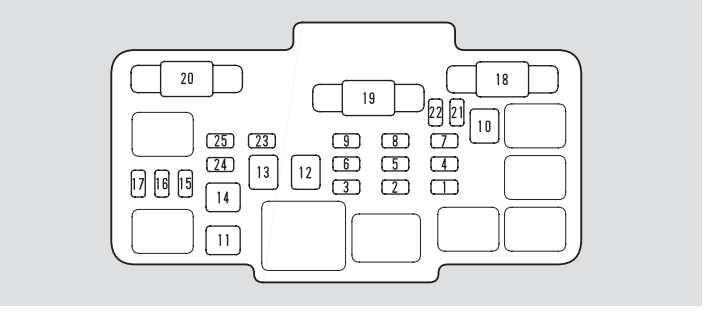

No.	Amps.	Circuits Protected
1	30 A	Condenser fan
2	10 A	Small Light
3	7.5 A	Interior Light
4	20 A	Cooling Fan
5	10 A	Hazard
6	20 A	FI ECU (ECM/PCM)
7	15 A	Horn, Stop
8	20 A	ABS (F/S)
9	7.5 A	Back Up
10	30 A	ABS Motor
11	40 A	Rear Demister
12	40 A	Heater Motor
13	40 A	Power Window
14	30 A	Option
15	20 A	Left Headlight
16	15 A	Door Lock
17	20 A	Right Headlight
18	—	Not Used
19	100 A	Main Fuse Battery
20	40 A	Main Fuse Ignition
21—25	—	Spare Fuse

Emergency Towing

If your vehicle needs to be towed, call a professional towing service or an organization. Never tow your vehicle with just a rope or chain. It is very dangerous.

Flat-bed Equipment — The operator loads your vehicle on the back of a truck. **This is the best way to transport your vehicle.**

Wheel-lift Equipment — The tow truck uses two pivoting arms that go under the tires (front or rear) and lift them off the ground. The other two tires remain on the ground. **This is an acceptable way to tow your vehicle.**

If, due to damage, your vehicle must be towed with the front wheels on the ground, do the following:

Manual Transmission:
- Release the parking brake.
- Shift the transmission to Neutral.

Automatic Transmission:
- Start the engine.
- Shift to D, then to N.
- Turn off the engine.
- Release the parking brake.

NOTICE

Improper towing preparation will damage the transmission. Follow the above procedure exactly. If you cannot shift the transmission or start the engine (automatic transmission), your vehicle must be transported with the front wheels off the ground.

With the front wheels on the ground, it is best to tow the vehicle no farther than 50 miles (80 km), and keep the speed below 35 mph (55 km/h).

NOTICE

Trying to lift or tow your vehicle by the bumpers will cause serious damage. The bumpers are not designed to support the vehicle's weight.

CONTINUED

Emergency Towing

If you decide to tow your vehicle with all four wheels on the ground, make sure you use a properly-designed and attached tow bar. Prepare the vehicle for towing as described above, and leave the ignition switch in the Accessory (I) position so the steering wheel does not lock. Make sure the radio and any electrical accessories are turned off so they do not run down the battery.

NOTICE: *The steering system can be damaged if the steering wheel is locked. Leave the ignition switch in the ACCESSORY (I) position, and make sure the steering wheel turns freely before you begin towing.*

Technical Information

The diagrams in this section give you the dimensions and capacities of your vehicle, and the locations of the identification numbers. It also includes information you should know about your vehicle's tires and emissions control systems.

Identification Numbers 216
Specifications 218
DOT Tire Quality Grading (U.S. Vehicles) 220
Uniform Tire Quality Grading 220
Treadwear 220
Traction..... 220
Temperature 221
Tire Labeling 222
Emissions Controls..... 223
The Clean Air Act..... 223
Crankcase Emissions Control System..... 223
Evaporative Emissions Control System..... 223
Onboard Refueling Vapor Recovery 224
Exhaust Emissions Controls 224
PGM-FI System 224
Ignition Timing Control System..... 224
Three Way Catalytic Converter..... 224
Replacement Parts..... 224
Three Way Catalytic Converter... 225
State Emissions Testing 226

Identification Numbers

Your vehicle has several identifying numbers in various places.

The Vehicle Identification Number (VIN) is the 17-digit number your dealer uses to register your vehicle for warranty purposes. It is also necessary for licensing and insuring your vehicle. The easiest place to find the VIN is on a plate fastened to the top of the dashboard. You can see it by looking through the windshield on the driver's side. It is also on the Certification label attached to the driver's doorjamb, and is stamped on the engine compartment bulkhead. The VIN is also provided in bar code on the Certification label.

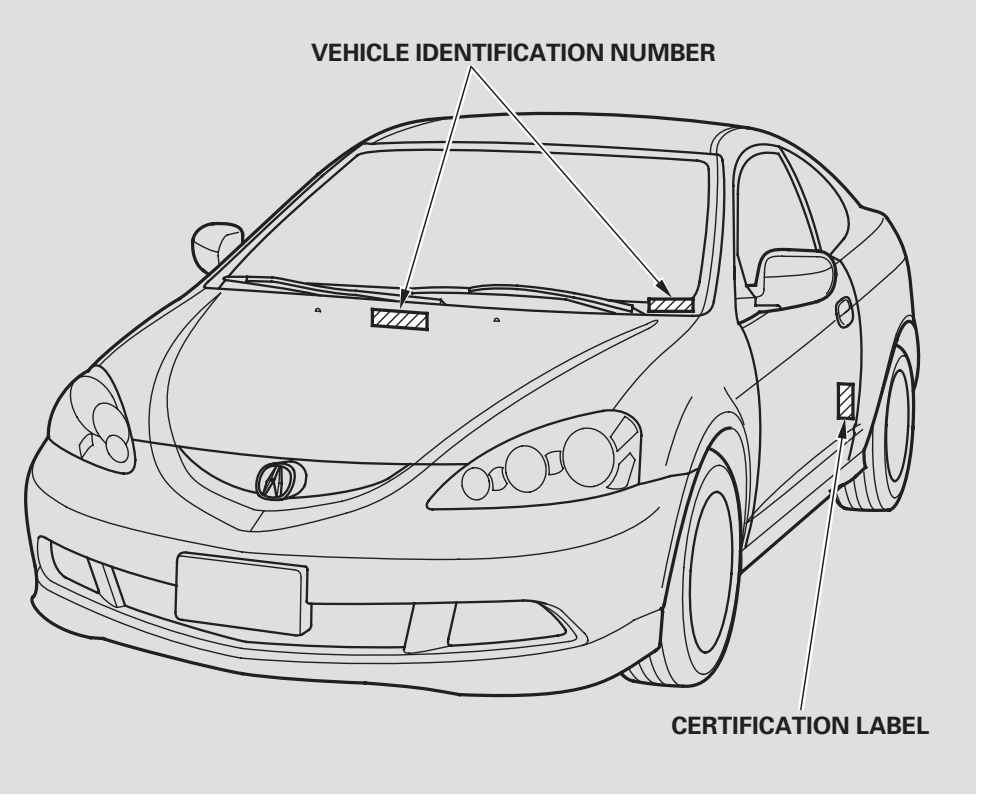

Identification Numbers

The Engine Number is stamped into the engine block.

The Transmission Number is on a label on top of the transmission.

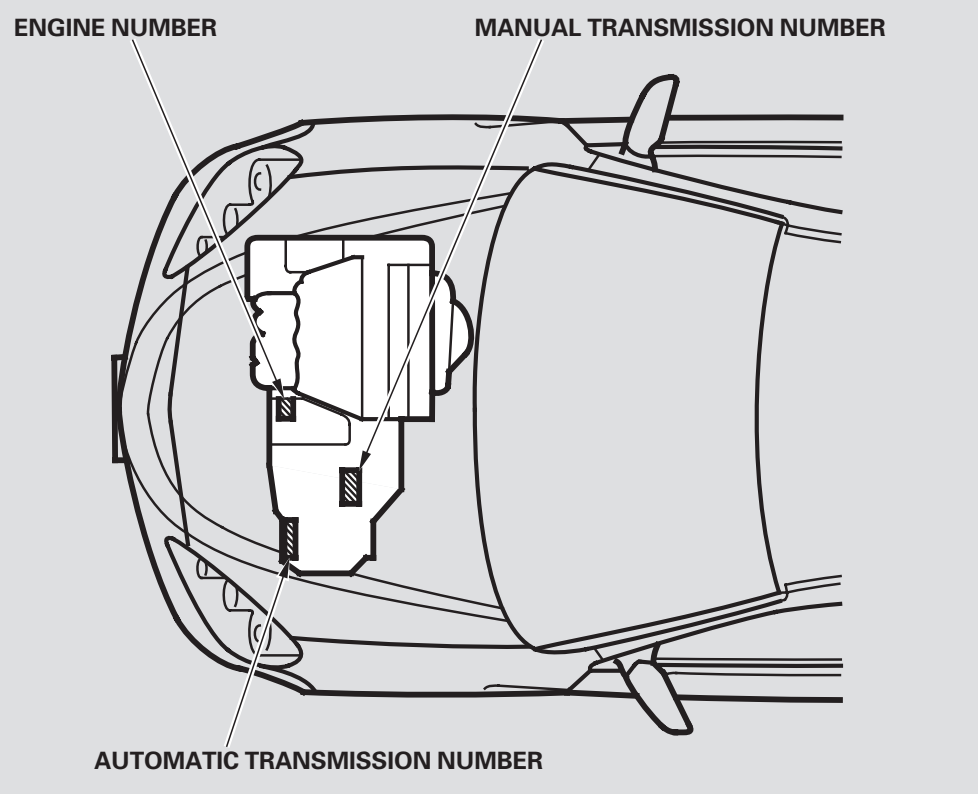

Specifications

Dimensions

Length		172.6 in (4,385 mm)
Width		67.9 in (1,725 mm)
Height		54.9 in (1,395 mm)
Wheelbase		101.2 in (2,570 mm)
Track	Front	58.5 in (1,485 mm)
	Rear	58.5 in (1,485 mm)

Weights

Gross vehicle weight rating	See the certification label attached to the driver's doorjamb.

Engine

Type		Water cooled 4-stroke DOHC VTEC in line, 4-cylinder gasoline engine.
Bore x Stroke		3.39 x 3.39 in (86.0 x 86.0 mm)
Displacement		121.9 cu-in (1,998 cm^3)
Compression ratio		9.8 : 1*1 11.0 : 1*2
Spark plug	NGK	IZFR6K11*1 IFR7G-11KS*2
	DENSO	SKJ20DR-M11*1 SK22PR-M11S*2

*1 : RSX and Premium models
*2 : Type-S

Air Conditioning

Refrigerant type	HFC-134a (R-134a)
Charge quantity	17.6－19.4 oz (500－550 g)
Lubricant type	SP-10

Capacities

Fuel tank		Approx. 13.2 US gal (50 ℓ)
Engine coolant	Change*1	
	Manual	1.35 US gal (5.1 ℓ)
	Automatic	1.32 US gal (5.0 ℓ)
	Total	
	Manual	1.69 US gal (6.4 ℓ)
	Automatic	1.66 US gal (6.3 ℓ)
Engine oil	Change*4	
	Including filter	4.4 US qt (4.2 ℓ)*2 5.0 US qt (4.7 ℓ)*3
	Without filter	4.2 US qt (4.0 ℓ)*2 4.8 US qt (4.5 ℓ)*3
	Total	5.6 US qt (5.3 ℓ)*2 6.1 US qt (5.8 ℓ)*3

*1 : Including the coolant in the reserve tank and that remaining in the engine.
Reserve tank capacity:
0.16 US gal (0.6 ℓ)
*2 : RSX and Premium models
*3 : Type-S
*4 : Excluding the oil remaining in the engine.

Specifications

Capacities

Manual transmission fluid	Change	1.6 US qt (1.5 ℓ)
	Total	1.8 US qt (1.7 ℓ)
Automatic transmission fluid	Change	2.9 US qt (2.7 ℓ)
	Total	6.9 US qt (6.5 ℓ)
Windshield washer reservoir	U.S. vehicles	2.6 US qt (2.5 ℓ)
	Canadian vehicles	4.8 US qt (4.5 ℓ)

Lights

Headlights	High	12 V — 65 W (HB3)
	Low	12 V — 55 W
Front turn signal		12 V — 21 W
Front parking lights		12 V — 5 W (Amber)
Front side marker lights		12 V — 5 W
Rear turn signal lights		12 V — 21 W
Brake/Taillights		12 V — 21 W/5 W
High-mount brake light		12 V — 21 W
Rear side marker lights		12 V — 5 W
Back-up lights		12 V — 21 W
License plate lights		12 V — 5 W
Ceiling light		12 V — 8 W
Cargo area light		12 V — 5 W
Spotlights		12 V — 8 W
Glove box light		12 V — 3.4 W

Battery

Capacity	12 V — 36 AH/5 HR

Fuses

Interior	See page 211 or the fuse label attached to the inside of the fuse box door under the dashboard.
Under-hood	See page 212 or the fuse box cover.

Alignment

Toe-in	Front	0.0 in (0 mm)
	Rear	0.08 in (2.0 mm)
Camber	Front	−0°30′
	Rear	−1°00′
Caster	Front	2°53′

Tires

Size	Front/Rear	P195/65R15 89H *1 P205/55R16 89V *2 P215/45R17 87V *3
	Spare	T135/70D15 99M *1, *2 T125/70D16 96M *3
Pressure	Front	31 psi (220 kPa , 2.2 kgf/cm²)
	Rear	31 psi (220 kPa , 2.2 kgf/cm²)
	Spare	60 psi (420 kPa , 4.20 kgf/cm²)

*1 : Canadian Standard model
*2 : U.S. Base model and Canadian Premium models
*3 : Type-S

DOT Tire Quality Grading (U.S. Vehicles)

The tires on your vehicle meet all U.S. Federal Safety Requirements. All tires are also graded for treadwear, traction, and temperature performance according to Department of Transportation (DOT) standards. The following explains these gradings.

Uniform Tire Quality Grading
Quality grades can be found where applicable on the tire sidewall between the tread shoulder and the maximum section width. For example:

Treadwear 200
Traction AA
Temperature A

All passenger vehicle tires must conform to Federal Safety Requirements in addition to these grades.

Treadwear
The treadwear grade is a comparative rating based on the wear rate of the tire when tested under controlled conditions on a specified government test course. For example, a tire graded 150 would wear one and one-half (1 1/2) times as well on the government course as a tire graded 100. The relative performance of tires depends upon the actual conditions of their use, however, and may depart significantly from the norm due to variations in driving habits, service practices, and differences in road characteristics and climate.

Traction – AA, A, B, C
The traction grades, from highest to lowest, are AA, A, B, and C. Those grades represent the tire's ability to stop on wet pavement as measured under controlled conditions on specified government test surfaces of asphalt and concrete. A tire marked C may have poor traction performance.

Warning: The traction grade assigned to this tire is based on straight-ahead braking traction tests, and does not include acceleration, cornering, hydroplaning, or peak traction characteristics.

DOT Tire Quality Grading (U.S. Vehicles)

Temperature – A, B, C
The temperature grades are A (the highest), B, and C, representing the tire's resistance to the generation of heat and its ability to dissipate heat when tested under controlled conditions on a specified indoor laboratory test wheel. Sustained high temperature can cause the material of the tire to degenerate and reduce tire life, and excessive temperature can lead to sudden tire failure. The grade C corresponds to a level of performance, which all passenger vehicle tires must meet under the Federal Motor Vehicle Safety Standard No. 109. Grades B and A represent higher levels of performance on the laboratory test wheel than the minimum required by law.

Warning: The temperature grade for this tire is established for a tire that is properly inflated and not overloaded. Excessive speed, underinflation, or excessive loading, either separately or in combination, can cause heat buildup and possible tire failure.

Tire Labeling

The tires that came on your vehicle have a number of markings. Those you should be aware of are described below.

Tire Size

Whenever tires are replaced, they should be replaced with tires of the same size. The following is an example of tire size with an explanation of what each component means.

P205/55R16 89V

P — Vehicle type (P indicates passenger vehicle).

205 — Tire width in millimeters.

55 — Aspect ratio (the tire's section height as a percentage of its width).

R — Tire construction code (R indicates radial).

16 — Rim diameter in inches.

89 — Load index (a numerical code associated with the maximum load the tire can carry).

V — Speed symbol (an alphabetical code indicating the maximum speed rating).

Tire Identification Number

Tire Identification Number (TIN) is a group of numbers and letters that look like the following example TIN.

DOT B97R FW6X 2202

DOT — This indicates that the tire meets all requirements of the U.S. Department of Transportation.

B97R — Manufacturer's identification mark.

FW6X — Tire type code.

2202 — Date of manufacture.

Emissions Controls

The burning of gasoline in your vehicle's engine produces several by-products. Some of these are carbon monoxide (CO), oxides of nitrogen (NOx) and hydrocarbons (HC). Gasoline evaporating from the tank also produces hydrocarbons. Controlling the production of NOx, CO, and HC is important to the environment. Under certain conditions of sunlight and climate, NOx and HC react to form photochemical "smog." Carbon monoxide does not contribute to smog creation, but it is a poisonous gas.

The Clean Air Act

The United States Clean Air Act* sets standards for automobile emissions. It also requires that automobile manufacturers explain to owners how their emissions controls work and what to do to maintain them. This section summarizes how the emissions controls work. Scheduled maintenance is on pages 157 and 158.

* In Canada, Acura vehicles comply with the Canadian emission requirements, as specified in an agreement with Environment Canada, at the time they are manufactured.

Crankcase Emissions Control System

Your vehicle has a positive crankcase ventilation system. This keeps gasses that build up in the engine's crankcase from going into the atmosphere. The positive crankcase ventilation valve routes them from the crankcase back to the intake manifold. They are then drawn into the engine and burned.

Evaporative Emissions Control System

As gasoline evaporates in the fuel tank, an evaporative emissions control canister filled with charcoal adsorbs the vapor. It is stored in this canister while the engine is off. After the engine is started and warmed up, the vapor is drawn into the engine and burned during driving.

Emissions Controls

Onboard Refueling Vapor Recovery

The onboard refueling vapor recovery (ORVR) system captures the fuel vapors during refueling. The vapors are adsorbed in a canister filled with activated carbon. While driving, the fuel vapors are drawn into the engine and burned off.

Exhaust Emissions Controls

The exhaust emissions controls include three systems: PGM-FI, ignition timing control, and three way catalytic converter. These three systems work together to control the engine's combustion and minimize the amount of HC, CO, and NOx that comes out the tailpipe. The exhaust emissions control systems are separate from the crankcase and evaporative emissions control systems.

PGM-FI System

The PGM-FI System uses sequential multiport fuel injection.
It has three subsystems: air intake, engine control, and fuel control. The powertrain control module (PCM) in automatic transmission vehicles or the engine control module (ECM) in manual transmission vehicles uses various sensors to determine how much air is going into the engine. It then controls how much fuel to inject under all operating conditions.

Ignition Timing Control System

This system constantly adjusts the ignition timing, reducing the amount of HC, CO, and NOx produced.

Three Way Catalytic Converter

The three way catalytic converter is in the exhaust system. Through chemical reactions, it converts HC, CO, and NOx in the engine's exhaust to carbon dioxide (CO_2), nitrogen (N_2), and water vapor.

Replacement Parts

The emissions control systems are designed and certified to work together in reducing emissions to levels that comply with the Clean Air Act. To make sure the emissions remain low, you should use only new Acura replacement parts or their equivalent for repairs. Using lower quality parts may increase the emissions from your vehicle.

The emissions control systems are covered by warranties separate from the rest of your vehicle. Read your warranty manual for more information.

Three Way Catalytic Converter

The three way catalytic converter contains precious metals that serve as catalysts, promoting chemical reactions to convert the exhaust gasses without affecting the metals. The catalytic converter is referred to as a three-way catalyst, since it acts on HC, CO, and NOx. A replacement unit must be an original Acura part or its equivalent.

The three way catalytic converter must operate at a high temperature for the chemical reactions to take place. It can set on fire any combustible materials that come near it. Park your vehicle away from high grass, dry leaves, or other flammables.

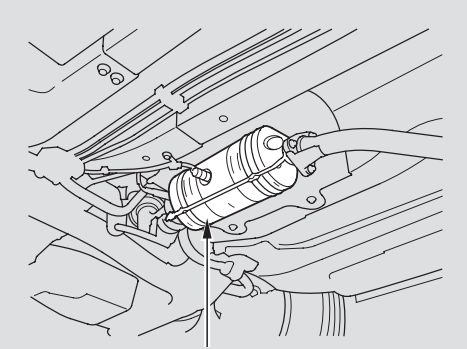

THREE WAY CATALYTIC CONVERTER

A defective three way catalytic converter contributes to air pollution, and can impair your engine's performance. Follow these guidelines to protect your vehicle's three way catalytic converter.

- Always use unleaded gasoline. Even a small amount of leaded gasoline can contaminate the catalyst metals, making the three way catalytic converter ineffective.
- Keep the engine tuned-up.
- Have your vehicle diagnosed and repaired if it is misfiring, backfiring, stalling, or otherwise not running properly.

State Emissions Testing

Testing of Readiness Codes
If you take your vehicle for a state emissions test shortly after the battery has been disconnected or gone dead, it may not pass the test. This is because of certain “readiness codes” that must be set in the on-board diagnostics for the emissions systems. These codes are erased when the battery is disconnected, and set again only after several days of driving under a variety of conditions.

If the testing facility determines that the readiness codes are not set, you will be requested to return at a later date to complete the test. If you must get the vehicle re-tested within the next two or three days, you can condition the vehicle for retesting by doing the following.

- Make sure the gas tank is nearly, but not completely, full (around 3/4).
- Make sure the vehicle has been parked with the engine off for 8 hours or more.
- Make sure the ambient temperature is between 20° and 95°F.
- Without touching the accelerator pedal, start the engine, and let it idle for 20 seconds.
- Keep the vehicle in Park (automatic transmission) or Neutral (manual transmission). Increase the engine speed to 2,000 rpm, and hold it there until the temperature gauge rises to at least 1/4 of the scale (about 3 minutes).
- Select a nearby lightly traveled major highway where you can maintain a speed of 50 to 60 mph (80 to 97 km/h) for at least 20 minutes. Drive on the highway in D (A/T) or 5th (M/T). Do not use the cruise control. When traffic allows, drive for 90 seconds without moving the accelerator pedal. (Vehicle speed may vary slightly; this is okay.) If you cannot do this for a continuous 90 seconds because of traffic conditions, drive for at least 30 seconds, then repeat it two more times (for a total of 90 seconds).
- Then drive in city/suburban traffic for at least 10 minutes. When traffic conditions allow, let the vehicle coast for several seconds without using the accelerator pedal or the brake pedal.

If the testing facility determines the readiness codes are still not set, see your dealer.

Warranty and Customer Relations

Customer Relations Information 228
Warranty Coverages 229
Reporting Safety Defects (U.S. Vehicles) 230
Authorized Manuals 231

Customer Relations Information

Acura dealership personnel are trained professionals. They should be able to answer all your questions. If you encounter a problem that your dealership does not solve to your satisfaction, please discuss it with the dealership's management. The service manager or general manager can help. Almost all problems are solved in this way.

If you are dissatisfied with the decision made by the dealership's management, contact the Acura Customer Relations Office.

U.S. Owners:
American Honda Motor Co., Inc.
Acura Client Services
Mail Stop 500-2N-7E
1919 Torrance Blvd.
Torrance, CA 90501-2746

Tel: (800) 382-2238

In Puerto Rico and the U.S. Virgin Islands:

Bella International Corp.
C-1 Bechara St. Segarra Corner
Puerto Nuevo, Puerto Rico 00920

Tel:(787) 620-7028

Canadian Owners:
CUSTOMER RELATIONS
RELATIONS AVEC LA CLIENTÈLE
Honda Canada Inc.
715 Milner Avenue
Toronto, ON
M1B 2K8

Tel:1-888-9-ACURA-9
Fax:Toll-free 1-877-939-0909
Toronto (416) 287-4776

When you call or write, please give us this information:

- Vehicle Identification Number (see page 217)
- Name and address of the dealer who services your vehicle
- Date of purchase
- Mileage on your vehicle
- Your name, address, and telephone number
- A detailed description of the problem
- Name of the dealer who sold the vehicle to you

Warranty Coverages

U.S. Owners

Your new vehicle is covered by these warranties:

New Vehicle Limited Warranty — covers your new vehicle, except for the battery, emissions control systems and accessories, against defects in materials and workmanship.

Emissions Control Systems Defects Warranty and Emissions Performance Warranty — these two warranties cover your vehicle's emissions control systems. Time, mileage, and coverage are conditional. Please read your warranty manual for exact information.

Original Equipment Battery Limited Warranty — this warranty gives up to 100 percent credit toward a replacement battery.

Seat Belt Limited Warranty — a seat belt that fails to function properly is covered for the useful life of the vehicle.

Rust Perforation Limited Warranty — all exterior body panels are covered for rust-through from the inside for the specified time period with no mileage limit.

Accessory Limited Warranty — Acura accessories are covered under this warranty. Time and mileage limits depend on the type of accessory and other factors. Please read your warranty manual for details.

Replacement Parts Limited Warranty — covers all Acura replacement parts against defects in materials and workmanship.

Replacement Battery Limited Warranty — provides prorated coverage for a replacement battery purchased from an Acura dealer.

Replacement Muffler Lifetime Limited Warranty — provides coverage for as long as the purchaser of the muffler owns the vehicle.

Restrictions and exclusions apply to all these warranties. Please read the 2005 Acura Warranty Information booklet that came with your vehicle for precise information on warranty coverages. Your vehicle's original tires are covered by their manufacturer. Tire warranty information is in a separate booklet.

Canadian Owners

Please refer to the 2005 Warranty Manual that came with your vehicle.

Reporting Safety Defects (U.S. Vehicles)

If you believe that your vehicle has a defect which could cause a crash or could cause injury or death, you should immediately inform the National Highway Traffic Safety Administration (NHTSA) in addition to notifying Acura Automobile Division, American Honda Motor Co., Inc.

If NHTSA receives similar complaints, it may open an investigation, and if it finds that a safety defect exists in a group of vehicles, it may order a recall and remedy campaign. However, NHTSA cannot become involved in individual problems between you, your dealer, or Acura Automobile Division, American Honda Motor Co., Inc.

To contact NHTSA, you may either call the Auto Safety Hotline toll-free at 1-800-424-9393 (or 366-0123 in Washington D.C. area) or write to:

NHTSA,
U.S. Department of Transportation,
Washington, D.C. 20590.

You can also obtain other information about motor vehicle safety from the Hotline.

Purchasing Factory Authorized Manuals (U.S. only)

The publications shown below can be purchased from Helm Incorporated. You can order in any of three ways:

- Detach and mail the order form on the right half of this page
- Call Helm Inc. at 1-800-782-4356 (credit card orders only)
- Go online at *www. helminc. com*

If you are interested in other years or models, contact Helm Inc. at 1-800-782-4356.

Publication Form Number	Form Description	Price Each*
61S6M03	2002－05 Acura RSX Service Manual	$69.00
61S6M03EL	2002－05 Acura RSX Electrical Troubleshooting Manual	$47.00
61S6M30	2002－05 Acura RSX Body Repair Manual	$44.00
31S6M630	2005 Acura RSX Owner's Manual	$37.00
31S6M920	2005 Acura RSX Maintenance Journal	$12.00
31S6MQ20	2005 Acura RSX Quick Start Guide	$12.00
ACU-R	Order Form for Previous Years- Indicate Year and Model Desired	FREE

* Prices are subject to change without notice and without incurring obligation.

Valid only for sales within the United States. Canadian owners should contact their authorized Acura dealer.

ORDER TOLL FREE: 1-800-782-4356

(NOTE: For Credit Card Holder Orders Only)

Monday-Friday 8:00 A.M. － 6:00 P.M. EST

MINIMUM CREDIT CARD PURCHASE $10.00

OR

By completing this form you can order the materials desired. You can pay by check or money order, or charge to your credit card. Mail to Helm Incorporated at the address shown on the back of the order form.

2005 ACU	PUBLICATION NUMBER	VEHICLE MODEL Name	VEHICLE MODEL Year	Qty	Price Each*	Total Price

* Prices are subject to change without notice and without incurring obligation.

Orders are mailed within 10 days. Please allow adequate time for delivery.

TOTAL MATERIAL	
Mich. Purchases Add 6% Sales Tax	
HANDLING CHARGE	$6.95
GRAND TOTAL	

Authorized Manuals

SHIP TO

NOTE: Dealers and Companies please provide dealer or company name, and also the name of the person to whose attention the shipment should be sent. For purchases outside U.S.A. please write to the address shown below for a quotation.

Customer Name _____ Attention _____

Street Address — No P.O. Box Number _____ Apartment Number _____

City _____ State & Zip Code _____

Daytime Telephone Number ( ) _____

PAYMENT

☐ Check or money order enclosed payable to Helm Inc — U.S. funds only. Do not send cash

☐ Master Card ☐ VISA ☐ Check here if your billing address is different from the shipping address shown above.

Account Number _____ Expiration: Mo. Yr. _____

CUSTOMER SIGNATURE _____ DATE _____

These Publications cannot be returned for credit without receiving advance authorization within 14 days of delivery. On returns, a restocking fee may be applied against the original order.

HELM P.O. BOX 07280·DETROIT, MICHIGAN 48207·1-800-782-4356

Service Manual:
This manual covers maintenance and recommended procedures for repair to engine and chassis components. It is written for the journeyman mechanic, but is simple enough for most mechanically-inclined owners to understand.

Electrical Troubleshooting Manual:
This manual complements the service manual by providing in-depth troubleshooting information for each electrical circuit in your vehicle.

Body Repair Manual:
This manual describes the procedures involved in the replacement of damaged body parts.

A

Accessories 127
ACCESSORY (Ignition Key Position) 66
Accessory Power Sockets 83
Additives, Engine Oil 163
Airbag (SRS) 11, 22
Airbags, Additional Information 22
  Additional Safety Precautions 27
  Airbag Service 27
  How the Side Airbag Off Indicator Works 27
  How the SRS Indicator Works 26
  How Your Front Airbags Work 23
  How Your Side Airbags Work 25
  SRS Components 22
Air Conditioning System 88
Air Pressure, Tires 182
Antifreeze 165
Anti-lock Brakes (ABS)
  Indicator 53, 147
  Operation 147
Anti-theft Steering Column Lock 66
Audio System 92
Automatic Seat Belt Tensioners 20
Automatic Speed Control 115
Automatic Transmission 139
  Capacity, Fluid 219
  Checking Fluid Level 167
  Shifting 139
  Shift Lever Position Indicator 139
  Shift Lever Positions 139
  Shift Lock Release 144

B

Battery
  Charging System Indicator 53, 204
  Jump Starting 200
  Maintenance 188
  Specifications 219
Before Driving 119
Belts, Seat 10, 19
Beverage Holders 83
Booster Seats 42
Brakes
  Anti-lock System (ABS) 147
  Break-in, New Linings 121
  Bulb Replacement 177
  Fluid 169
  System Indicator 53, 206
  Wear Indicators 146
Braking System 146
Break-in, New Vehicle 121
Brightness Control, Instruments 62
Brights, Headlights 61
Bulb Replacement
  Back-up Lights 177
  Brake Lights 177
  Front Parking Lights 175
  Front Side Marker 176
  Front Turn Signal Lights 174
  Headlights 172
  High-mount Brake Light 177
  Rear Side Marker Lights 178
  Specifications 219
Bulbs, Halogen 172

CONTINUED

Index

C

Capacities Chart 218, 219
Carbon Monoxide Hazard 45
Cargo Area Cover 75
Cargo, *how to carry* 129
Cassette Player
  Care 100
  Operation 98
CAUTION, Explanation of ii
CD Care 108
CD Changer 103
  Care 108
  Operation 103
CD Changer Error
  Message 110, 111
CD Player Error Message 109
Certification Label 216
Chains, *tires* 187
Changing a Flat Tire 193
Changing Oil
  How to 163
  When to 157
Charging System Indicator 53, 204
Checklist, Before Driving 134
Child Safety 28
  Booster Seats 42
  Child Seats 32
  Important Safety Reminders 28
  Infants 32
  Larger Children 41
  LATCH 36
  Risks with Airbags 29
  Small Children 33
  Tethers 39
  Where Should a Child Sit? 29
Child Seats
  LATCH 36
  Lower Anchors 36
  Tether Anchorage Points 39
Clock 113
Clock, Setting the 113
Clutch Fluid 169
Code, Audio System 112
CO in the Exhaust 223
Cold Weather, Starting in 135
Compact Spare *tire* 192
Console Compartment 84
Consumer Information* 228
Controls, Instruments and 49
Coolant
  Adding 165
  Checking 125
  Proper Solution 165
  Temperature Gauge 58
Crankcase Emissions Control
  System 223
Cruise Control Indicator 54
Cruise Control Operation 115
Cup Holders 83
Customer Relations Office 228

D

DANGER, Explanation of ii
Dashboard 4, 50
Daytime Running Lights 61
Daytime Running Lights
  Indicator 55
Dead Battery 200
Defects, Reporting Safety 230
Defog and Defrost 91
Defogger, Rear Window 62
Dimensions 218
Dimming the Headlights 61

Dipstick
Automatic Transmission..... 167
Engine Oil..... 125
Directional Signals..... 61
Disc Brake Wear Indicators..... 146
Disposal of Used Oil..... 165
Doors
Locking and Unlocking..... 67
Power Door Locks..... 67
DOT Tire Quality Grading 220
Downshifting, 5-speed and 6-speed
Manual Transmissions..... 136
Drive Belts..... 170
Driver and Passenger Safety..... 7
Driving 133
Economy 126

E

Economy, Fuel 126
Emergencies
Jump Starting 200
Towing 213
Hazard Warning Flashers 62
Emergencies on the Road..... 191
Battery, Jump Starting 200
Brake System Indicator 206
Changing a Flat Tire 193
Charging System Indicator 204
Checking the Fuses..... 208
Low Oil Pressure Indicator 204
Malfunction Indicator Lamp 205
Manually Closing Moonroof 207
Overheated Engine 202
Emergency Flashers 62
Emergency Towing 213
Emissions Controls..... 223
Emissions Testing, State 226
Engine
Coolant Temperature Gauge 58
Drive Belts..... 170
Engine Speed Limiter 137, 143
Malfunction Indicator
Lamp 53, 205
Oil Pressure Indicator..... 53, 204
Oil, What Kind to Use 162
Overheating..... 202
Specifications 218
Starting..... 135
Engine, *if it won't start*..... 198
Evaporative Emissions Controls.. 223
Exhaust Fumes 45
Expectant Mothers, Use of Seat
Belts by 17

F

Fan, Interior..... 88
Features 87
Filling the Fuel Tank..... 122
Filters
Oil 163
Flashers, Hazard Warning..... 62
Flat Tire, Changing a 193
Fluids
Automatic Transmission..... 167
Brake 169
Clutch 169
Power Steering..... 171
Windshield Washer 167
FM Stereo Radio
Reception 96
Folding Rear Seat 73
Four-way Flashers 62
Front Airbags 11, 22

CONTINUED

Index

Front Seat
- Adjusting ... 71
- Heaters ... 74
- Airbags ... 11, 22

Fuel ... 121
- Fill Door and Cap ... 122
- Gauge ... 58
- Octane Requirement ... 121
- Reserve Indicator ... 54
- Tank, Filling the ... 122

Fuses, Checking the ... 208

G

Gas Mileage, Improving ... 126
Gasoline ... 121
- Fuel Reserve Indicator ... 54
- Gauge ... 58
- Octane Requirement ... 121
- Tank, Filling the ... 122

Gas Station Procedures ... 122
Gauges
- Engine Coolant Temperature ... 58
- Fuel ... 58

Gearshift Lever Positions
- Automatic Transmission ... 139
- 5-speed and 6-speed Manual Transmissions ... 136

Glove Box ... 84

H

Halogen Headlight Bulbs ... 172
Hatch ... 68
- Opening the ... 68

Hazard Warning Flashers ... 62
Headlights
- Aiming ... 172
- Daytime Running Lights ... 61
- High Beam Indicator ... 54
- Reminder Beeper ... 61
- Replacing Halogen Bulbs ... 172
- Turning on ... 61

Heater, Seat ... 74
Heating and Cooling ... 88
High Altitude, Starting at ... 135
High-Low Beam Switch ... 61
High-mount Brake Light ... 177
Hood, Opening the ... 123
Horn ... 59
Hydraulic Clutch ... 169

I

Identification Number, Vehicle ... 216
Ignition
- Keys ... 64
- Switch ... 66
- Timing Control System ... 224

Immobilizer System ... 65
Important Safety Precautions ... 8
Indicators
- ABS (Anti-lock Brake) ... 53, 147
- Brake (Parking and Brake System) ... 53, 206
- Charging System ... 53, 204
- Cruise Control ... 54
- Door-open ... 54
- DRL (Daytime Running Lights) ... 55
- High Beam ... 54
- Key (Immobilizer System) ... 54
- Low Fuel ... 54
- Low Oil Pressure ... 53, 204
- Side Airbag Off ... 52
- SRS ... 52
- Turn Signal and Hazard Warning ... 54

Washer Level 55
Indicators, Instrument Panel..... 52
Infant Restraint 32
Infant Seats
LATCH..... 36
Lower Anchors 36
Tether Anchorage Points 40
Inflation, Proper Tire 183
Inside Mirror 79
Inspection, Tire 184
Instrument Panel 51
Instrument Panel Brightness 62
Instrument Panel Indicators..... 52
Interior Lights 86
Introduction i

J

Jacking up the Vehicle 194
Jack, Tire 194
Jump Starting 200

K

Keys..... 64

L

Label, Certification 216
Lane Change, Signaling 61
Lap/Shoulder Belts 15, 19
LATCH Anchorage System..... 36
Lights
Bulb Replacement 172
Load Limit 130
LOCK (Ignition Key Position) 66
Locks
Anti-theft Steering Column 66
Fuel Fill Door 122
Glove Box 84
Hatch 68
Power Door and Hatch 67
Low Coolant Level..... 125
Low Fuel Indicator 54
Low Oil Pressure Indicator 53, 204
Lower Anchor 36
Lower Gear, Downshifting to a.... 136
Lubricant Specifications
Chart 218, 219
Luggage, *Storing (Cargo)*..... 129
Luggage Cover (Cargo Cover) 75

M

Maintenance..... 153
Owner Maintenance Checks.... 156
Record 159
Required Indicator..... 55
Safety..... 154
Schedule 155-158
Malfunction Indicator Lamp .. 53, 205
Manual Transmission..... 136
Shifting the 136
Meters, Gauges..... 57
Mirrors, Adjusting 79
Modifying Your Vehicle..... 127
Moonroof 79
Closing Manually 207
Operation 79

CONTINUED

Index

N

Neutral Gear Position..... 140
New Vehicle Break-in 121
Normal Shift Speeds..... 137
NOTICE, Explanation of..... i
Numbers, Identification..... 216

O

Octane Requirement, Gasoline.... 121
Odometer..... 57
Odometer, Trip 57
Oil
  Change, How to 163
  Change, When to 157
  Checking Engine 125
  Pressure Indicator 53, 204
  Selecting Proper Viscosity
    Chart 162, 163
ON (Ignition Key Position) 66
Onboard Refueling Vapor
  Recovery 224
Outside Mirrors 80
Overheating, Engine 202
Owner Maintenance Checks..... 156

P

Panel Brightness Control 62
Park Gear Position..... 140
Parking..... 145
Parking Brake 81
Parking Brake and Brake
  System Indicator..... 53, 206
Parking Lights 61, 175
Parking Over Things that Burn... 145
Playing the Radio 92
Playing a CD..... 101
Playing a CD Changer..... 103
Playing a Tape..... 98
PGM-FI System..... 224
Power Door Locks..... 67
Power Socket Locations..... 83
Power Windows 77
Pregnancy, Using Seat Belts 17
Protecting Adults and Teens..... 13
  Additional Safety Precautions.... 18
  Advice for Pregnant Women..... 17
Protecting Children 28
  General Guidelines 28
Protecting Infants 32
Protecting Small Children 33

R

Radiator Overheating..... 202
Radio/CD Sound System..... 92
Readiness Codes..... 226
Rear Lights, Bulb Replacement... 177
Rear Seat Access 72
Rear Seat, Folding 73
Rear View Mirror..... 79
Rear Window Defogger 62
Rear Window Washer 60
Rear Window Wiper 60
Reclining the Seat Backs 71
Recommended Shift Speeds 137
Reminder Indicators..... 52
Remote Transmitter..... 69
Replacement Information
  Dust and Pollen Filter 179
  Engine Oil and Filter 163
  Floor Mats 179
  Fuses 208
  Light Bulbs 172
  Schedule 155
  Seat Belts 21
  Tires 186
  Wiper Blades 180

Replacing Seat Belts After a Crash 21
Reserve Tank, Engine Coolant 125
Restraint, Child 28
Reverse Gear Position..... 140
Rotation, Tire 185

S

Safety Belts..... 10, 19
Safety Defects, Reporting* 230
Safety Features 9
Airbags..... 11
Seat Belts 10
Safety Labels, Location of 46
Safety Messages ii
Seat Belts 10, 19
Additional Information..... 19
Automatic Seat Belt Tensioners..... 20
Cleaning 179
Lap/Shoulder Belt..... 19
Maintenance..... 21
Reminder Indicator and Beeper..... 19, 52
System Components..... 19
Use During Pregnancy..... 17
Wearing a Lap/Shoulder Belt 15, 19
Seat Heaters 74
Seats, Adjusting the..... 13, 71
Security System 114
Serial Number 216
Service Intervals 157
Service Manual* 231
Service Station Procedures 122
Setting the Clock 113
Shift Lever Position Indicators 139
Shift Lock Release..... 144
Shifting
The Automatic Transmission .. 139
The 5-speed and 6-speed Manual Transmissions..... 136
Side Airbags 11, 25
Off Indicator..... 27, 52
Signaling Turns..... 61
Snow Tires..... 187
Sound System..... 92
Spare Tire
Inflating..... 192
Specifications 219
Specifications Charts..... 218
Speed Control..... 115
SRS, Additional Information..... 22
Additional Safety Precautions.... 27
Airbag Service..... 27
How the Side Airbag Off Indicator Works..... 27
How the SRS Indicator Works... 26
How Your Front Airbags Work..... 23
How Your Side Airbags Work.... 25
SRS Components 22
SRS Indicator..... 26, 52
State Emissions Testing 226
START (Ignition Key Position) 66
Starting the Engine..... 135
In Cold Weather at High Altitude 135
With a Dead Battery 200
Steam Coming from Engine..... 202
Steering Wheel
Adjustment 63
Anti-theft Column Lock 66
Buttons..... 116
Stereo Sound System 92

CONTINUED

Index

Storing Your Vehicle 189
Supplemental Restraint
System..... 11, 22
Servicing 27
SRS Indicator..... 26, 52
System Components..... 22
Synthetic Oil..... 163

T

Taillights, Changing Bulbs in..... 177
Taking Care of the
Unexpected 191
Tape Player..... 98
Technical Descriptions 215
DOT Tire Quality Grading 220
Emissions Control Systems..... 223
State Emissions Testing 226
Three Way Catalytic
Converter..... 225
Tire Labeling..... 222
Temperature Gauge 58
Temperature, Inside Sensor..... 91
Tether Anchorage Points 40
Theft Protection..... 112
Three Way Catalytic Converter... 225
Tilt the Steering Wheel..... 63
Time, Setting the 113
Tire Chains 187
Tire, How to Change a Flat 193
Tires 182
Air Pressure 183
Checking Wear 184
Compact Spare 192
DOT Tire Quality Grading 220
Inflation..... 182
Inspection 184
Maintenance..... 185
Replacing 186
Rotating..... 185
Snow 187
Specifications 186, 219
Tire Chains..... 187
Winter Driving 187
Tools, Tire Changing 193
Towing
A Trailer..... 148
Emergency 213
Equipment and Accessories..... 149
Weight Limit 148
Traction Devices..... 187
Trailer Loading 148
Trailer Towing Tips..... 149
Transmission
Checking Fluid Level,
Automatic 167
Fluid Selection..... 168
Identification Number..... 216
Shifting the Automatic..... 139
Shifting the Manual..... 136
Treadwear 220
Trip Meter 57
Turn Signals 61

U

Unexpected, Taking Care
of the 191
Uniform Tire Quality Grading 220
Unleaded Gasoline..... 121
Used Oil, How to Dispose of 165

V

Vehicle Capacity Load 130
Vehicle Dimensions..... 218
Vehicle Identification Number..... 216
Vehicle Storage..... 189

VIN 216
Viscosity, Oil..... 162

W

WARNING, Explanation of ii
Warning Labels, Location of 46
Warranty Coverages* 229
Washer, Windshield
  Checking the Fluid Level 167
  Indicator..... 55
  Operation 60
Wheels
  Adjusting the Steering 63
  Alignment and Balance..... 185
  Compact Spare..... 192
  Wrench 195
Windows
  Operating the Power 77
  Rear, Defogger 62
Windshield
  Cleaning 60
  Defroster 90
  Washers 60
Wipers, Windshield
  Changing Blades..... 180
  Operation 60
Worn Tires 184
Wrecker, Emergency Towing..... 213

*: U.S. and Canada only

Service Information Summary

Gasoline:
(All except Type-S)
Unleaded gasoline, pump octane number of 86 or higher.

(Type-S)
Premium unleaded gasoline, pump octane number of 91 or higher.

Fuel Tank Capacity:
13.2 US gal (50 ℓ)

Recommended Engine Oil:
API Premium grade detergent oil.
Except Type-S: SAE 5W-20
Type-S: SAE 5W-30

Oil change capacity (including filter):
(All except Type S)
4.4 US qt (4.2 ℓ)
(Type S)
5.0 US qt (4.7 ℓ)

Automatic Transmission Fluid:
Honda ATF-Z1 (Automatic Transmission Fluid) preferred, or a DEXRON® III ATF as a temporary replacement (see page 167).

Power Steering Fluid:
Honda Power Steering Fluid preferred, or another brand of power steering fluid as a temporary replacement. Do not use ATF (see page 171).

Brake Fluid:
Honda Heavy Duty Brake Fluid DOT 3 preferred, or a DOT 3 or DOT 4 brake fluid as a temporary replacement (see page 169).

Tire Pressure (measured cold):
Front:
31 psi (220 kPa , 2.2 kgf/cm^2)
Rear:
31 psi (220 kPa , 2.2 kgf/cm^2)