FOREWORD

Welcome to the growing family of new INFINITI owners. This vehicle is delivered to you with confidence. It was produced using the latest techniques and strict quality control.

This manual was prepared to help you understand the operation and maintenance of your vehicle so that you may enjoy many miles (kilometers) of driving pleasure. Please read through this manual before operating your vehicle.

A separate Warranty Information Booklet explains details about the warranties covering your vehicle. The "INFINITI Service and Maintenance Guide" explains details about maintaining and servicing your vehicle. Additionally, a separate Customer Care/Lemon Law Booklet (U.S. only) will explain how to resolve any concerns you may have with your vehicle, as well as clarify your rights under your state's lemon law.

Your INFINITI dealership knows your vehicle best. When you require any service or have any questions, they will be glad to assist you with the extensive resources available to them.

Additionally , a separate Customer Care and Lemon Law Information Booklet will explain how to resolve any concerns you may have with your vehicle, as well as clarify your rights under your state's lemon law.

INFINITI is dedicated to providing a satisfying ownership experience for as long as you own your car. Should you have any questions regarding your INFINITI or your INFINITI dealer, please contact our Consumer Affairs department at 1–800–662–6200. In Canada 1–800–361–4792. Thank you.

READ FIRST—THEN DRIVE SAFELY

Before driving your vehicle please read this Owner's Manual carefully. This will ensure familiarity with controls and maintenance requirements, assisting you in the safe operation of your vehicle.

⚠ WARNING

IMPORTANT SAFETY INFORMATION REMINDERS FOR SAFETY!

Follow these important driving rules to help ensure a safe and comfortable trip for you and your passengers!

- **NEVER drive under the influence of alcohol or drugs.**
- **ALWAYS observe posted speed limits and never drive too fast for conditions.**
- **ALWAYS give your full attention to driving and avoid using vehicle features or taking other actions that could distract you.**
- **ALWAYS use your seat belts and appropriate child restraint systems. Pre-teen children should be seated in the rear seat.**
- **ALWAYS provide information about the proper use of vehicle safety features to all occupants of the vehicle.**
- **ALWAYS review this Owner's Manual for important safety information.**

For descriptions specified for four-wheel drive models, a 4x4 mark is placed at the beginning of the applicable sections/items.

As with other vehicles with features for off-road use, failure to operate four-wheel drive models correctly may result in loss of control or an accident. Be sure to read "Driving safety precautions" in the "Starting and driving" section of this manual.

ON-PAVEMENT AND OFF-ROAD DRIVING

This vehicle will handle and maneuver differently from an ordinary passenger car because it has a higher center of gravity for off-road use. As with other vehicles with features of this type, failure to operate this vehicle correctly may result in loss of control or an accident.

Be sure to read "On-pavement and off-road driving precautions", and "Avoiding collision and rollover", and "Driving safety precautions", in the "Starting and driving" section of this manual.

MODIFICATION OF YOUR VEHICLE

This vehicle should not be modified. Modification could affect its performance, safety or durability, and may even violate governmental regulations. In addition, damage or performance problems resulting from modifications may not be covered under INFINITI warranties.

This manual includes information for all options available on this model. Therefore, you may find some information that does not apply to your vehicle.

All information, specifications and illustrations in this manual are those in effect at the time of printing. INFINITI reserves the right to change specifications or design without notice and without obligation.

IMPORTANT INFORMATION ABOUT THIS MANUAL

You will see various symbols in this manual. They are used in the following ways:

⚠ WARNING

This is used to indicate the presence of a hazard that could cause death or serious personal injury. To avoid or reduce the risk, the procedures must be followed precisely.

⚠ CAUTION

This is used to indicate the presence of a hazard that could cause minor or moderate personal injury or damage to your vehicle. To avoid or reduce the risk, the procedures must be followed carefully.

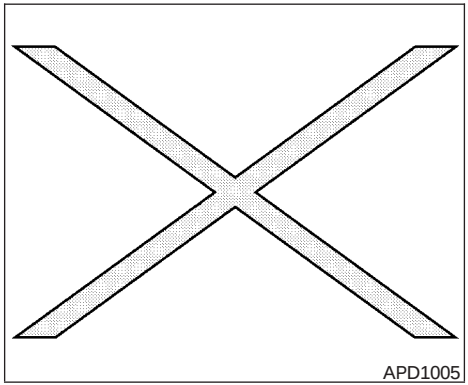

If you see this symbol, it means **“Do not do this”** or **“Do not let this happen.”**

If you see a symbol similar to these in an illustration, it means the arrow points to the front of the vehicle.

Arrows in an illustration that are similar to these indicate movement or action.

Arrows in an an illustration that are similar to these call attention to an item in the illustration.

CALIFORNIA PROPOSITION 65 WARNING

⚠ WARNING

Engine exhaust, some of its constituents, and certain vehicle components contain or emit chemicals known to the State of California to cause cancer and birth defects or other reproductive harm. In addition, certain fluids contained in vehicles and certain products of component wear contain or emit chemicals known to the State of California to cause cancer and birth defects or other reproductive harm.

CALIFORNIA PERCHLORATE ADVISORY

Some vehicle parts, such as lithium batteries, may contain perchlorate material. The following advisory is provided: “Perchlorate Material – special handling may apply, See www.dtsc.ca.gov/hazardouswaste/perchlorate.”

Bluetooth®

BLUETOOTH® is a trademark owned by Bluetooth SIG, Inc., U.S.A. and licensed to Xanavi Informatics Corporation.

gracenote

Gracenote® is a registered trademark of Gracenote, Inc. The Gracenote logo and logo type, and the “Powered by Gracenote” logo are trademarks of Gracenote.

INFINITI®

© 2008 NISSAN NORTH AMERICA, INC.

All rights reserved. No part of this Owner’s Manual may be reproduced or stored in a retrieval system, or transmitted in any form, or by any means, electronic, mechanical, photocopying, recording or otherwise, without the prior written permission of Nissan North America, Inc.

Table of Contents

Illustrated table of contents	0
Safety—Seats, seat belts and supplemental restraint system	1
Instruments and controls	2
Pre-driving checks and adjustments	3
Monitor, climate, audio, phone and voice recognition systems	4
Starting and driving	5
In case of emergency	6
Appearance and care	7
Maintenance and do-it-yourself	8
Technical and consumer information	9
Index	10

0 Illustrated table of contents

Air bags, seat belts and child restraints 0-2
Exterior front 0-3
Exterior rear. 0-4
Passenger compartment 0-5
Instrument panel. 0-6
Engine compartment check locations 0-8
Warning/indicator lights 0-9

AIR BAGS, SEAT BELTS AND CHILD RESTRAINTS

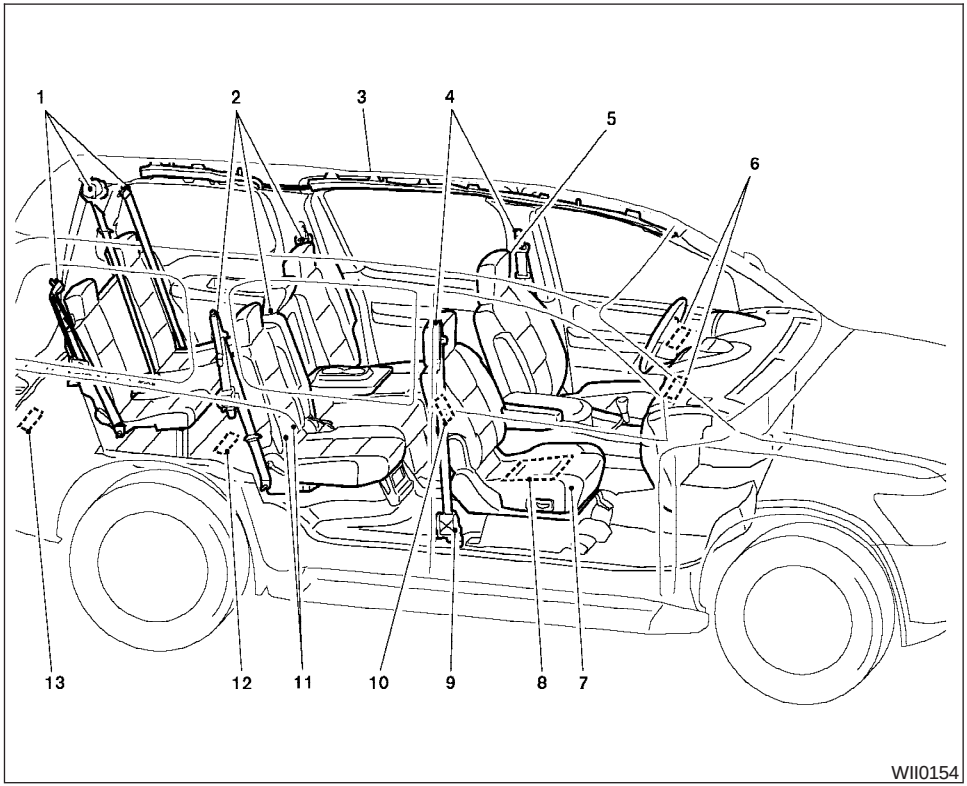

1. 3rd row bench seat belts (P. 1-15)
2. 2nd row seat belts (P. 1-15)
3. Roof-mounted curtain side-impact and rollover supplemental air bag (P. 1-48)
4. Front seat belts (P. 1-15)
5. Front-seat Active Head Restraints (P. 1-8)
6. Supplemental front-impact air bags (P.1-48)
7. Seats (P. 1-2)
8. Occupant classification sensor (pressure sensor) (P.1-56)
9. Seat belt with pretensioner (P. 1-61)
10. Front seat-mounted side-impact supplemental air bag (P. 1-48)
11. LATCH (Lower Anchors and Tethers for CHildren) (P. 1-28)
12. 2nd row seat top tether strap anchor (P. 1-30)
13. 3rd row seat top tether strap anchor (P. 1-30)

See the page number indicated in parentheses for operating details.

EXTERIOR FRONT

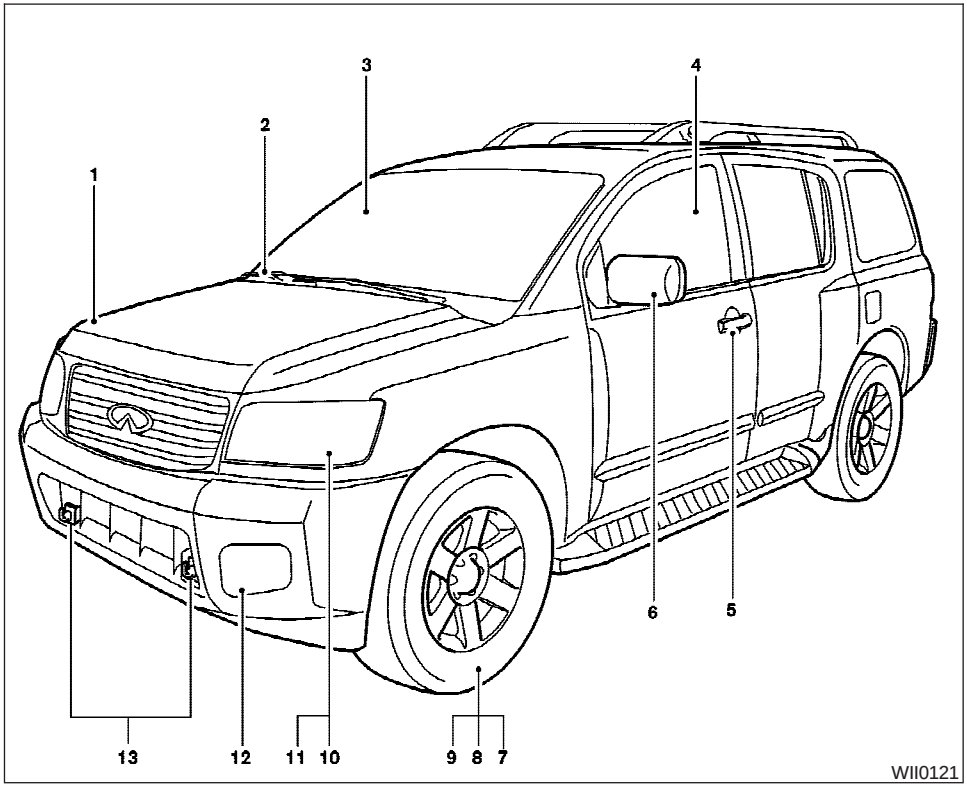

1. Engine hood (P. 3-16)
2. Windshield wiper and washer switch (P. 2-23)
3. Windshield (P. 8-19)
4. Power windows (P. 2-48)
5. Door locks, keyfob, keys (P. 3-3, 3-6, 3-2)
6. Mirrors (P. 3-24)
7. Tire pressure (P. 9-11)
8. Flat tire (P. 6-2)
9. Tire chains (P. 8-39)
10. Replacing bulbs (P. 8-29)
11. Headlight switch (P. 2-25)
12. Fog light switch and turn signal switch (P. 2-30, P. 2-25)
13. Tow hooks (P. 6-13)

See the page number indicated in parentheses for operating details.

EXTERIOR REAR

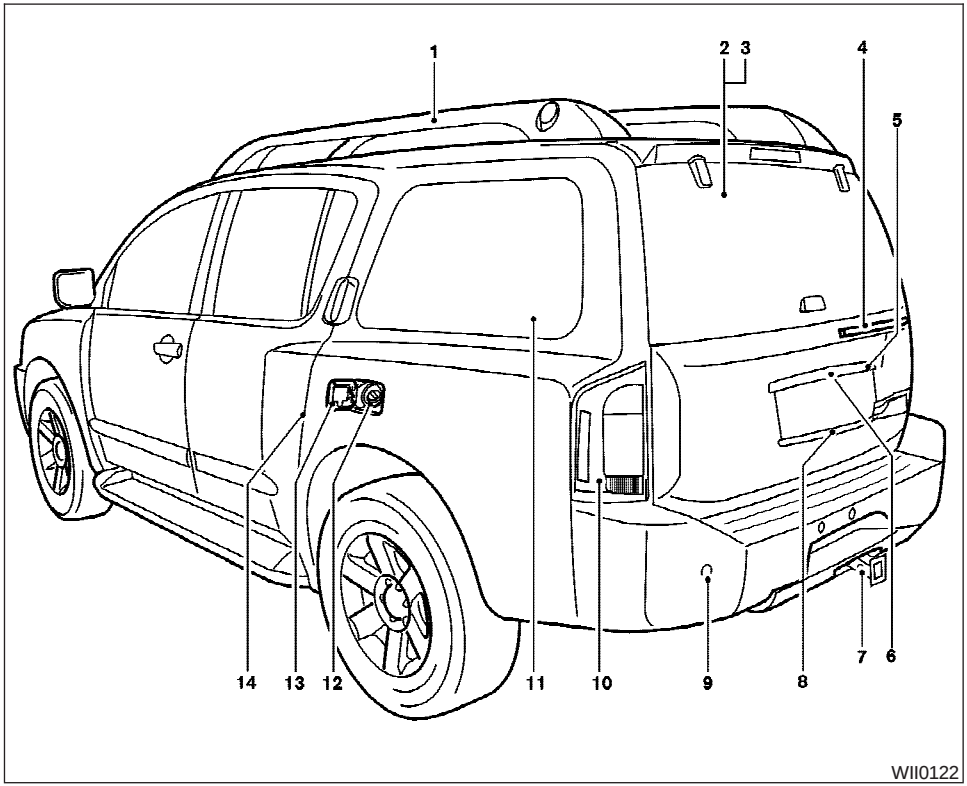

1. Roof rack (P. 2-47)
2. Rear window defroster (P. 2-25)
3. Glass hatch (P. 3-20)
4. Rear window washer (P.2-24)
5. Glass hatch release (P. 3-20)
6. Rearview monitor (P.4-18)
7. Towing/Trailer hitch (P.9-16)
8. Lift gate release (P. 3-16)
9. Rear sonar system (P.2-33)
10. Replacing bulbs (P. 8-29)
11. Power vent windows (P.2-51)
12. Fuel-filler cap, fuel recommendation (P. 3-21, P. 9-3)
13. Fuel-filler door (P. 3-21)
14. Child safety rear door locks (P. 3-6)

See the page number indicated in parentheses for operating details.

PASSENGER COMPARTMENT

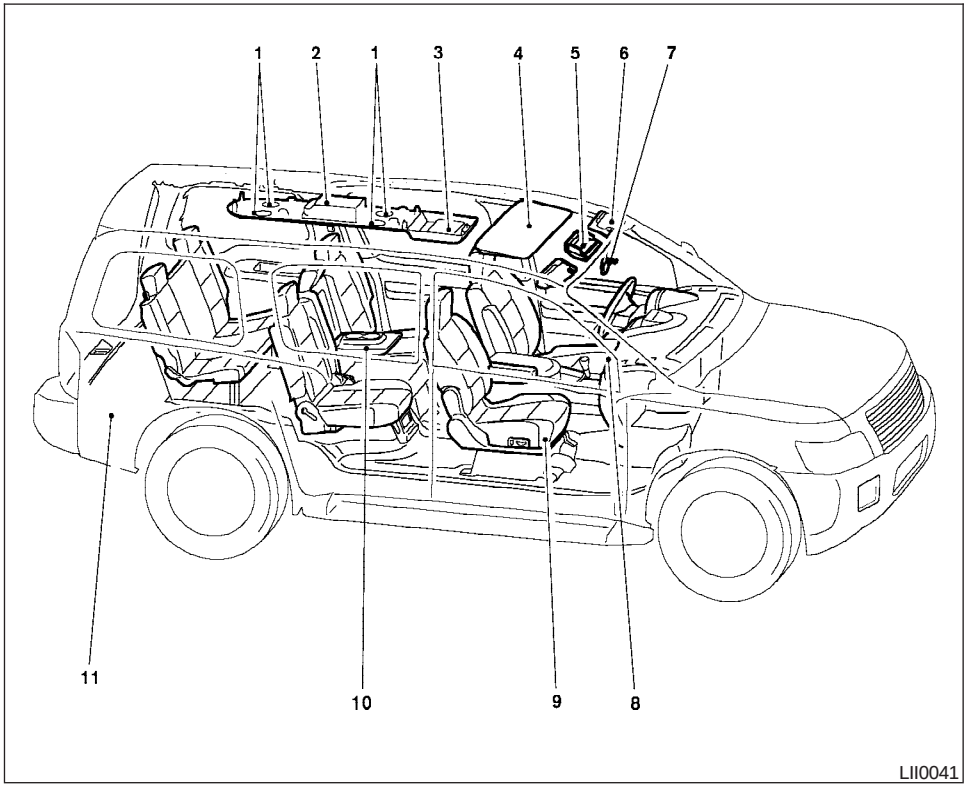

1. Rear ventilators (P. 4-21)
2. Storage (P. 2-37)
3. DVD entertainment system (if so equipped) (P. 4-53)
4. Moonroof (P. 2-51)
5. Map lights (P. 2-55)
6. Sun visors (P. 3-23)
7. HomeLink® (P. 2-55)
8. Glove box (P. 2-37)
9. Seats (P. 1-2)
10. Cup holders (P. 2-41)
11. Luggage storage (P. 2-44)

See the page number indicated in parentheses for operating details.

INSTRUMENT PANEL

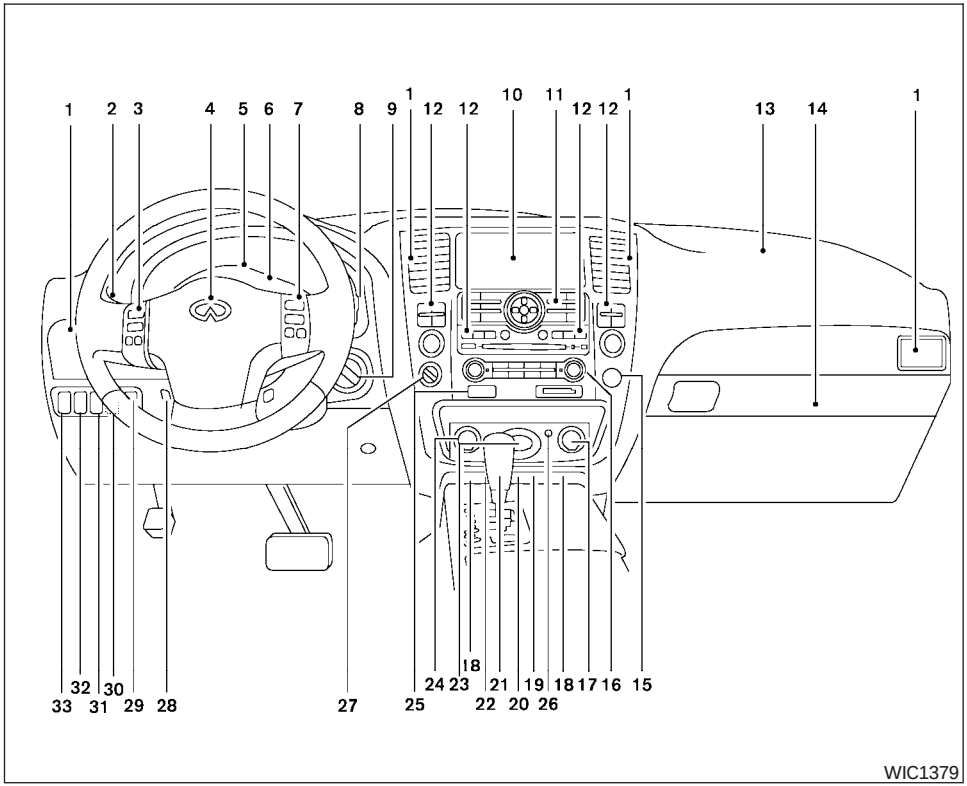

1. Vents (P. 4-21)
2. Headlight/fog light/turn signal switch (P. 2-25)
3. Steering wheel switch for audio control and Bluetooth® Hands-Free Phone System (if so equipped) (P. 4-50, 4-69)
4. Driver supplemental air bag/horn (P. 1-48, P. 2-31)
5. Meters, gauges and warning/indicator lights (P. 2-3, 2-10)
6. Instrument brightness control (P. 2-29)
7. Cruise control main/set switches and Intelligent cruise control main/set switches (if so equipped) (P. 5-17, P.5-19)
8. Windshield wiper/washer switch and rear window wiper/washer switch (P. 2-23, P. 2-24)
9. Ignition switch (P. 5-9)
10. Navigation system* (P. 4-2)
11. Navigation system* controls (P. 4-2)
12. Audio system controls (P. 4-25)
13. Front passenger supplemental air bag (P. 1-48)
14. Glove box (P. 2-38)
15. Hazard lights (P. 2-30)
16. Climate controls (P. 4-22)

17. Power outlet (P. 2-35)
18. Heated seat switch (P. 2-31)
19. Tow mode switch (P. 2-34)
20. Vehicle dynamic control (VDC) off switch (P. 2-32)
21. Shift selector lever (P. 5-12)
22. Heated steering wheel (P.2-32)
23. Clock (P. 2-35)
24. Power outlet (P. 2-35)
25. Front passenger air bag status light (P. 1-57)
26. Auxiliary jack (P. 4-38
27. 4WD shift switch (if so equipped) (P. 5-41)
28. Tilt steering wheel control (P. 3-22)
29.. Rear or front and rear sonar system off switch (P. 2-33)
30. Pedal position adjustment switch (P. 3-23)
31. Headlight aiming control (P. 2-28)
32. Power vent windows (P. 2-51)
33. Lift gate open/close switch (P. 3-16)

*: Refer to the separate Navigation System Owner's Manual.

See the page number indicated in parentheses for operating details.

ENGINE COMPARTMENT CHECK LOCATIONS

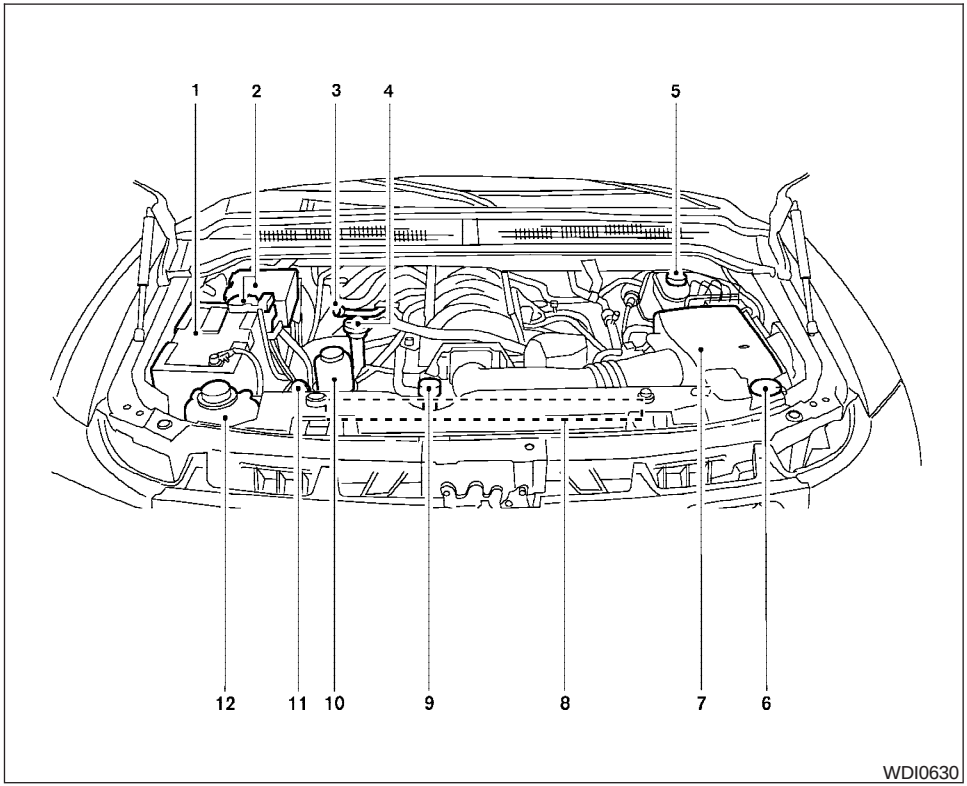

1. Battery (P. 8-13)
2. Fuse/fusible link box (P. 8-22)
3. Transmission dipstick (P. 8-11)
4. Engine oil filler cap (P. 8-8)
5. Brake fluid reservoir (P. 8-12)
6. Windshield washer fluid reservoir (P. 8-12)
7. Air cleaner (P. 8-17)
8. Drive belt location (P.8-15)
9. Radiator cap (P. 8-7)
10. Power steering fluid reservoir (P. 8-11)
11. Engine oil dipstick (P. 8-8)
12. Engine coolant reservoir (P. 8-7)

See the page number indicated in parentheses for operating details.

WARNING/INDICATOR LIGHTS

Warning light	Name	Page
ABS or (ABS)	Anti-lock Braking System (ABS) warning light	2-11
AT CHECK	Automatic transmission check warning light	2-11
ATP	Automatic transmission park warning light (4x4 model)	2-11
BRAKE or (!)	Brake warning light	2-11
− +	Charge warning light	2-12
CK SUSP	Check suspension warning light	2-12

Warning light	Name	Page
	Engine oil pressure low/engine coolant temperature high warning light	2-12
4WD	4WD warning light (4x4 model)	2-13
	Low fuel warning light	2-13
	Low tire pressure warning light	2-13
	Master warning light	2-14
	Seat belt warning light and chime	2-15
	Supplemental air bag warning light	2-15

Indicator light	Name	Page
2	Front passenger air bag status light	2-15
	High beam indicator light (Blue)	2-15
SERVICE ENGINE SOON	Malfunction indicator lamp (MIL)	2-16
	Security indicator light	2-16
SLIP	Slip indicator light	2-16
	Turn signal/hazard indicator lights	2-17
VDC OFF	Vehicle Dynamic Control (VDC) off indicator light	2-17

MEMO

1 Safety—Seats, seat belts and supplemental restraint system

Seats 1-2
Front power seat adjustment 1-3
2nd row captain's chair adjustment 1-4
2nd row bench seat adjustment (if so equipped) 1-5
Head restraint adjustment 1-7
Front-seat Active Head Restraints 1-8
Armrests 1-8
Flexible seating 1-9
3rd row power folding seats 1-14
Seat belts 1-15
Precautions on seat belt usage 1-15
Child safety 1-18
Pregnant women 1-19
Injured persons 1-19
Three-point type seat belt with retractor 1-19
Seat belt extenders 1-25
Seat belt maintenance 1-26
Child restraints 1-26
Precautions on child restraints 1-26
Lower Anchors and Tethers for CHildren system (LATCH) 1-28
Top tether strap child restraint 1-30
Child restraint installation using LATCH 1-33
Child restraint installation using the seat belts 1-37
Booster seats 1-43
Precautions on booster seats 1-43
Booster seat installation 1-45
Supplemental restraint system 1-48
Precautions on supplemental restraint system 1-48
Supplemental air bag warning labels 1-63
Supplemental air bag warning light 1-63

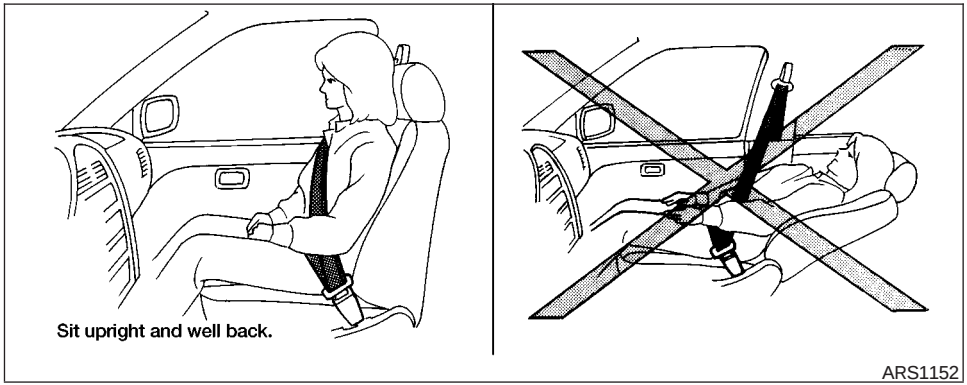

WARNING

- **Do not ride in a moving vehicle when the seatback is reclined. This can be dangerous. The shoulder belt will not be against your body. In an accident, you could be thrown into it and receive neck or other serious injuries. You could also slide under the lap belt and receive serious internal injuries.**

- **For the most effective protection when the vehicle is in motion, the seat should be upright. Always sit well back in the seat with both feet on the floor and adjust the seat properly. See "Precautions on Seat Belt Usage" later in this section.**
- **After adjustment, gently rock in the seat to make sure it is securely locked.**
- **Do not leave children unattended inside the vehicle. They could unknowingly activate switches or controls. Unattended children could become involved in serious accidents.**

- **The seatback should not be reclined anymore than needed for comfort. Seat belts are most effective when the passenger sits well back and straight up in the seat. If the seatback is reclined, the risk of sliding under the lap belt and being injured is increased.**

CAUTION

When adjusting the seat positions, be sure not to contact any moving parts to avoid possible injuries and/or damage.

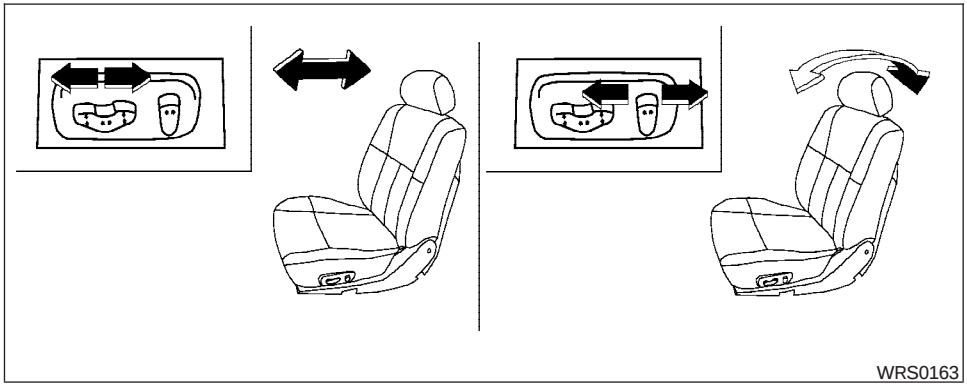

FRONT POWER SEAT ADJUSTMENT

Operating tips

- The power seat motor has an auto-reset overload protection circuit. If the motor stops during operation, wait 30 seconds, then reactivate the switch.
- Do not operate the power seat switch for a long period of time when the engine is off. This will discharge the battery.

See “Automatic drive positioner” in the “Pre-driving checks and adjustments” section for automatic drive positioner operation.

Forward and backward

Moving the switch forward or backward will slide the seat forward or backward to the desired position.

Reclining

Move the recline switch backward until the desired angle is obtained. To bring the seatback forward again, move the switch forward and move your body forward. The seatback will move forward.

The reclining feature allows adjustment of the seatback for occupants of different sizes for added comfort and to help obtain proper seat belt fit (see “Precautions on seat belt usage” later in this section). Also, the seatback can be reclined to allow occupants to rest when the vehicle is stopped and the transmission is in P (Park).

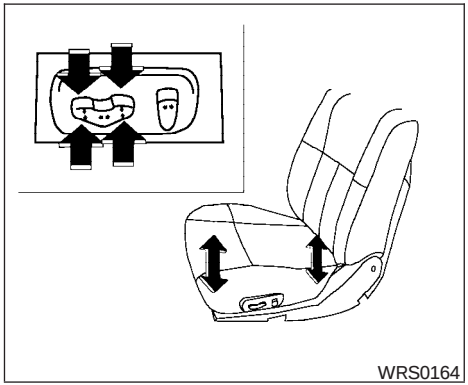

Seat lifter

Push the front or rear end of the switch up or down to adjust the angle and height of the seat cushion.

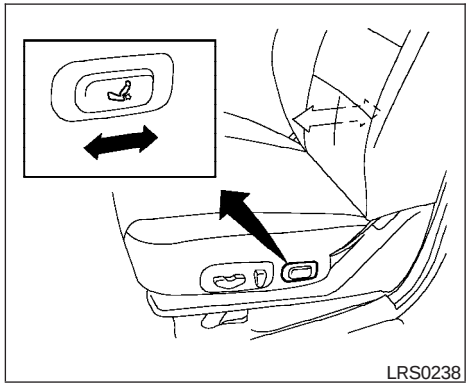

Lumbar support (driver's seat)

The lumbar support feature provides lower back support to the driver. Move the switch forward or backward to adjust the seatback lumbar area.

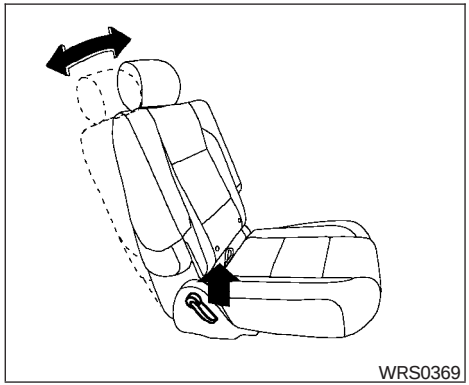

2ND ROW CAPTAIN'S CHAIR ADJUSTMENT

Reclining

To recline the seatback, pull up on the lever and lean back.

The recline feature allows adjustment of the seatback for occupants of different sizes for added comfort and to help obtain proper seat belt fit (see "Precautions on seat belt usage" later in this section). Also, the seatback can be reclined to allow occupants to rest when the vehicle is stopped and the transmission is in P (Park).

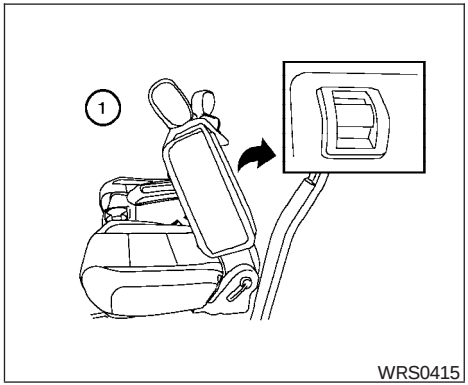

Tip up for easy entry to the 3rd row

The 2nd row captain's chairs can be tipped forward for easy entry or exit from the 3rd row bench seat. To enter the 3rd row ①, raise the armrest so it is parallel to the seatback and in the stowed position, then lift up on the latch located on the upper corner of the seatback on the 2nd row captain's chair and fold the seatback forward at an angle over the seat base. This will release the back of the seat so it may be tipped forward.

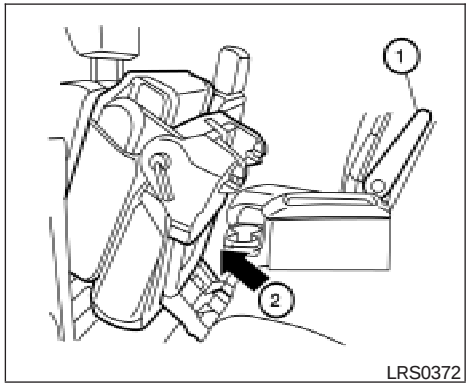

Then ② lift up on the lower corner of the seat base and tip the 2nd row captain's chair forward. To exit the 3rd row bench seat, lift up on the same latch and fold the seatback forward onto the seat base. Then lift up on the seat base and tip it forward.

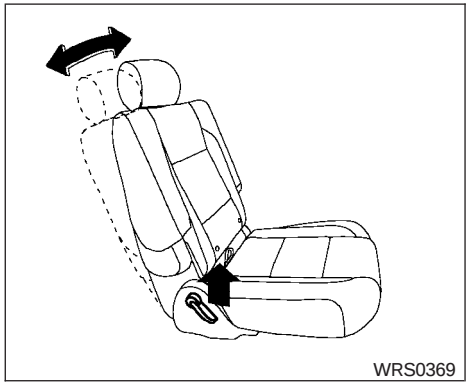

Outboard seats

2ND ROW BENCH SEAT ADJUSTMENT (if so equipped)

Reclining

To recline the seatback, pull up on the lever and lean back.

The recline feature allows adjustment of the seatback for occupants of different sizes for added comfort and to help obtain proper seat belt fit (see "Precautions on seat belt usage" later in this section). Also, the seatback can be reclined to allow occupants to rest when the vehicle is stopped and the transmission is in P (Park).

⚠ WARNING

- **After adjustment, gently rock in the seat to make sure it is securely locked.**
- **Do not ride in a moving vehicle when the seatback is reclined. This can be dangerous. The shoulder belt will not be against your body. In an accident, you could be thrown into it and receive neck or other serious injuries. You could also slide under the lap belt and receive serious internal injuries.**
- **For the most effective protection when the vehicle is in motion, the seat should be upright. Always sit well back in the seat and adjust the seat belt properly. See "Precautions on seat belt usage" later in this section.**

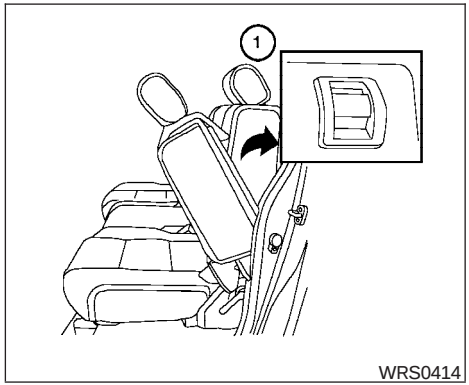

Tip up for easy entry to the 3rd row

The outboard seating positions on the 2nd row bench seat can be tipped forward for easy entry or exit from the 3rd row bench seat. To enter the 3rd row ①, lift up on the latch located on the upper corner of the seatback on the 2nd row bench seat and fold the seatback forward at an angle over the seat base. This will release the back of the seat so it may be tipped forward.

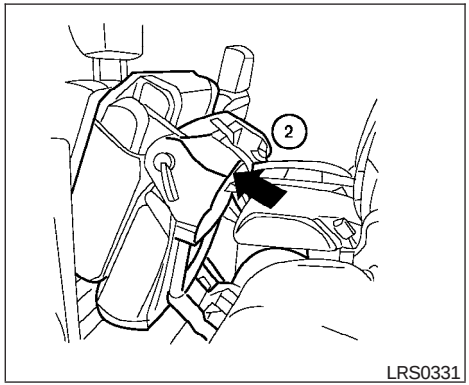

Then ② lift up on the lower corner of the seat base and tip the outboard seating position of the 2nd row bench seat forward. To exit the 3rd row bench seat, lift up on the same latch and fold the seatback forward onto the seat base. Then lift up on the seat base and tip it forward.

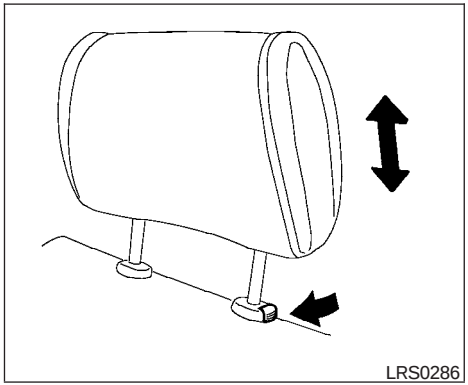

HEAD RESTRAINT ADJUSTMENT

To raise the head restraint, pull it up. To lower, push and hold the lock knob and push the head restraint down.

The head restraints on the 2nd and 3rd row seats are removable. The front seat head restraints are not removable.

⚠ WARNING

Head restraints should be adjusted properly as they may provide significant protection against injury in an accident. Do not remove them. Check the adjustment after someone else uses the seat.

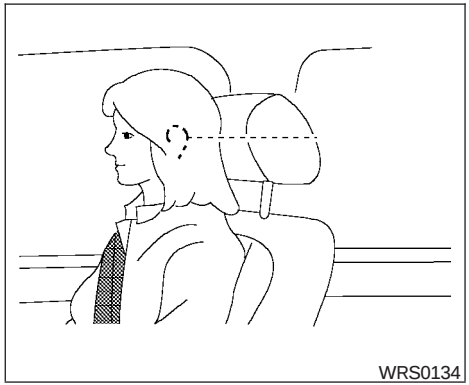

Adjust the head restraint so the center is level with the center of your ears.

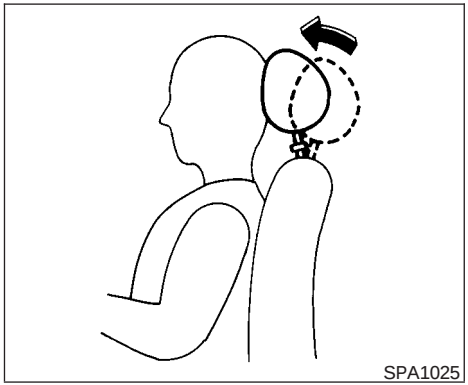

FRONT-SEAT ACTIVE HEAD RESTRAINTS

⚠ WARNING

- **Always adjust the head restraints properly as specified in this section. Failure to do so can reduce the effectiveness of the Active Head Restraint.**
- **Active Head Restraints are designed to supplement other safety systems. Always wear seat belts. No system can prevent all injuries in any accident.**
- **Do not attach anything to the head restraint stalks. Doing so could impair Active Head Restraint function.**

The Active Head Restraint moves forward utilizing the force that the seatback receives from the occupant in a rear-end collision. The movement of the head restraint helps support the occupant's head by reducing its backward movement and helping absorb some of the forces that may lead to whiplash-type injuries.

Active Head Restraints are effective for collisions at low to medium speeds in which it is said that whiplash injury occurs most.

Active Head Restraints operate only in certain rear-end collisions. After the collision, the head restraints return to their original positions.

Properly adjust the Active Head Restraints as described earlier in this section.

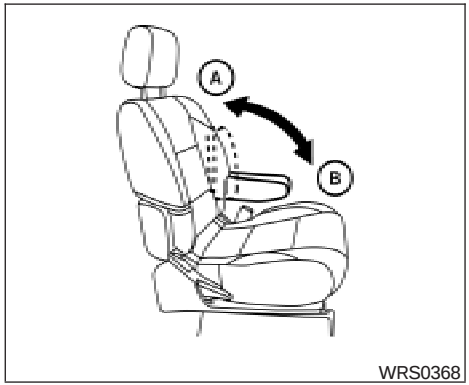

ARMRESTS

To use the armrests, pull them down to the resting position.

Ⓐ Stowed position

Ⓑ Resting position

FLEXIBLE SEATING

⚠ WARNING

- **Never allow anyone to ride in the cargo area or on the rear seats when they are in the fold-down position. In a collision, people riding in these areas without proper restraints are more likely to be seriously injured or killed.**
- **Do not allow people to ride in any area of your vehicle that is not equipped with seats and seat belts. Be sure everyone in your vehicle is in a seat and using a seat belt properly.**
- **Do not fold down the rear seats when occupants are in the rear seat area or any luggage is on the rear seats.**
- **Head restraints should be adjusted properly as they may provide significant protection against injury in an accident. Always replace and adjust them properly if they have been removed for any reason.**
- **If the head restraints are removed for any reason, they should be securely stored to prevent them from causing injury to passengers or damage to the vehicle in case of sudden braking or an accident.**
- **When returning the seatbacks to the upright position, be certain they are completely secured in the latched position. If they are not completely secured, passengers may be injured in an accident or sudden stop.**
- **Properly secure all cargo to help prevent it from sliding or shifting. Do not place cargo higher than the seatbacks. In a sudden stop or collision, unsecured cargo could cause personal injury.**

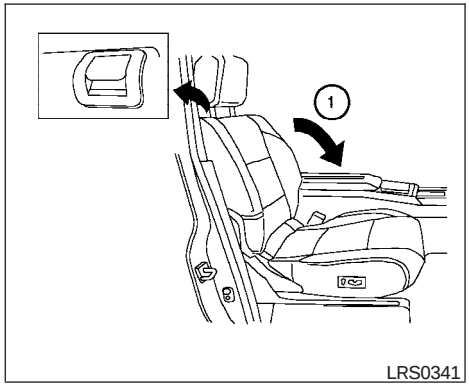

Folding the front passenger's seatback

To fold the front passenger's seatback flat for extra storage length when transporting long items:

1. Move the seat to the rearmost position by pushing the switch backward until the seat comes to a stop. Then recline the seatback as far forward as possible using the recline switch. Lift up on the latch located on the upper corner of the seatback to release the back of the seat.

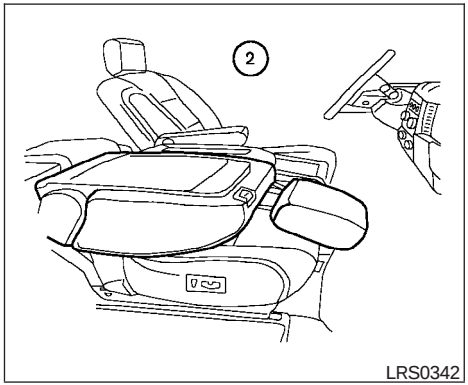

② Once the seatback is released it will enable you to fold the front passenger seatback flat over the seat cushion.

3. To return the front passenger's seat to a seating position, move the recline switch backward until the desired angle is obtained.

⚠WARNING

- **If you fold the front passenger's seatback flat forward to carry longer objects, be sure this cargo is properly secured and not near an air bag. In a crash, an inflating air bag might force that object toward a person. This could cause severe injury or even death. Secure objects away from the area in which an air bag would inflate. See "Precautions on supplemental restraint system" later in this section.**
- **Never allow anyone to ride in the cargo area or on the front passenger's seat when it is in the fold-down position. Use of these areas by passengers could result in serious injury in an accident or sudden stop.**

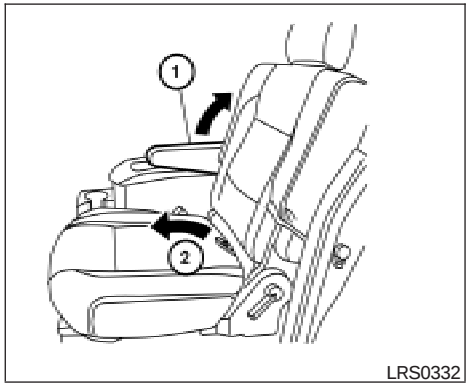

Folding the 2nd row captain's chairs

To fold the 2nd row captain's chairs flat for maximum cargo hauling:

① Raise the armrest to the stowed position. Remove the 2nd row center console, see "2nd row center console" in the "Instruments and controls" section of this Owner's Manual.

② Pull the strap forward, located in the center of the seat cushion, and fold the seat cushion toward the front of the vehicle.

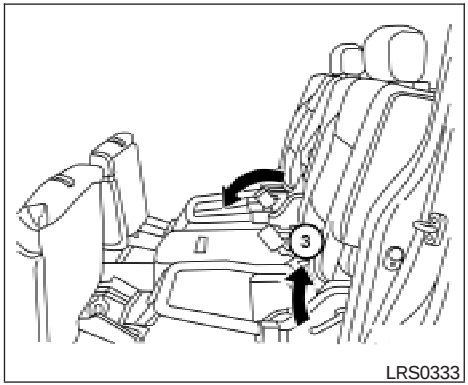

③ Then lift up on the recline lever to fold the seatback flat forward.

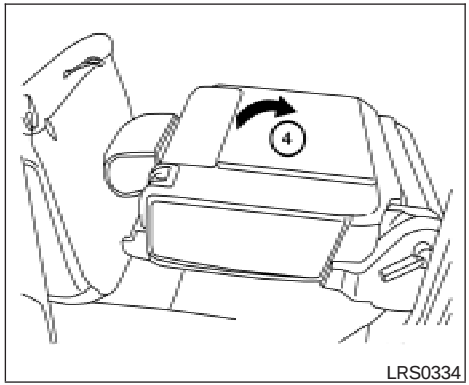

④ There is a carpet panel flap that can be folded toward the back of the vehicle.

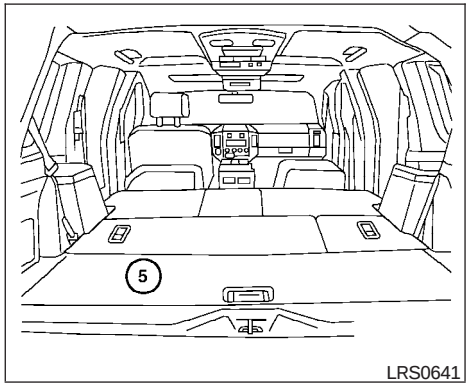

⑤ The carpet panel flaps provide a level cargo floor when the 3rd row seats are also folded flat. Reverse this process to return the 2nd row captain's chairs to a seating position. **Make sure to properly raise the seat-back to an upright position and push the seat cushion down into place.**

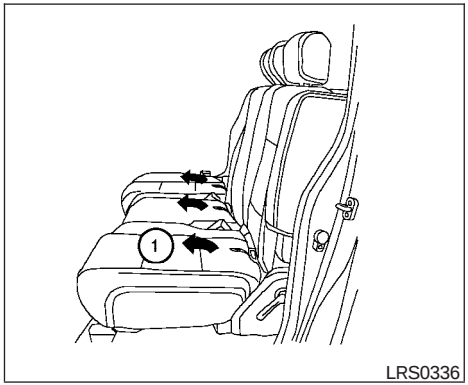

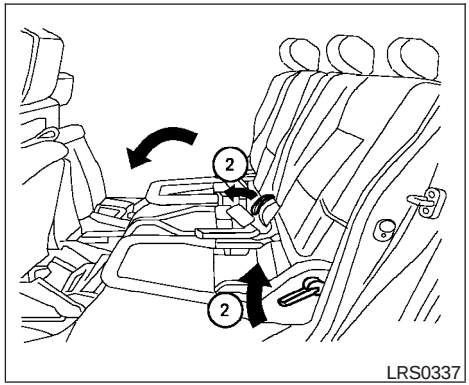

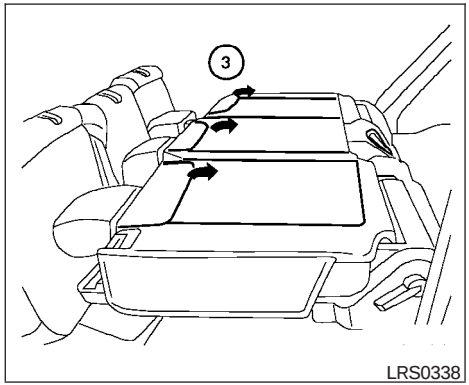

Folding the 2nd row bench seat (if so equipped)

To fold the 2nd row bench seat flat for maximum cargo hauling:

① Pull the strap forward, located in the center of each seat cushion, and fold each seat cushion toward the front of the vehicle.

② Then lift up on the recline lever on the side of the outboard seats to fold the outboard seat-backs flat. To fold the center seatback flat, pull up on the strap on the edge of the center seat cushion and fold the seatback toward the front of the vehicle.

③ There is a carpet panel flap on the back of each seat that can be folded toward the back of the vehicle.

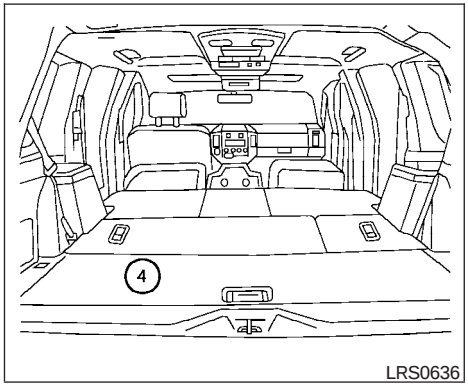

④ The carpet panel flap provides a level cargo floor when the 3rd row seats are also folded flat.

5. To return the outboard 2nd row bench seats to a seating position reverse the process for the outboard seats.

6. To return the center seat to a seating position, lift up on the pull strap on the back of the seat base while lifting on the seatback. Then push the seat cushion back into place. **Make sure to hold the seat belts above the seat cushion and properly raise the seatback to an upright position. Then push the seat cushion down into place.**

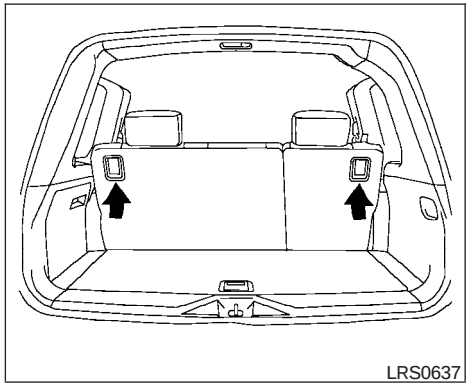

Folding the 3rd row split bench seat

To fold the 3rd row split bench seat flat for maximum cargo capacity:

1. Disconnect and secure the center seat belt and tongues into the retractor base. See “Stowing the 3rd row center seat belt” later in this section.

2. Lower the head restraints to the full down position.

3. Then pull up on the latch located on the outside corner of each seatback and fold the seatback forward over the seat base.

To return the 3rd row split bench seat to a seating position, unfold the seatback and push it back until it latches into position.

⚠ WARNING

- **When returning the seatbacks, be sure to attach the rear center seat belt connector.**
- **Do not unfasten the rear center seat belt connector except when folding down the rear seat.**
- **When attaching the rear center seat belt connector, be certain that the seatbacks are completely secured in the latched position and the rear center seat belt connector is completely secured.**
- **If the rear center seat belt connector and the seatbacks are not secured in the correct position, serious personal injury may result in an accident or sudden stop.**

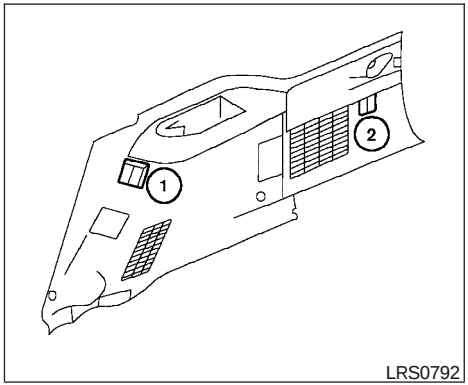

LRS0792

3RD ROW POWER FOLDING SEATS

The 3rd row power folding seat controls are located behind the 2nd row seat (passenger's side) on the 3rd row cup holder console ①. There are also controls located on the rear quarter trim panel behind the 3rd row seats (passenger's side) ②.

Before operating the 3rd row seats:

- Make sure the 2nd row seatback isn't reclined.
- Lower the 3rd row headrest to the full down position.
- Disconnect and secure the center seat belt and tongues into the retractor base. See "Stowing the 3rd row center seat belt" later in this section.
  - Always reconnect the center seat belt when the seat is returned to the upright position
- Make sure that there are no objects on the seatback cushion.

⚠CAUTION

Make sure the seat(s) is returned to the full upright position before a passenger sits in the seat(s).

When folding or returning the seat(s) to the upright position, to avoid injury to yourself and others:

- **Make sure that the seat path is clear before moving the seat.**
- **Be careful not to allow hands or feet to get caught or pinched in the seat.**

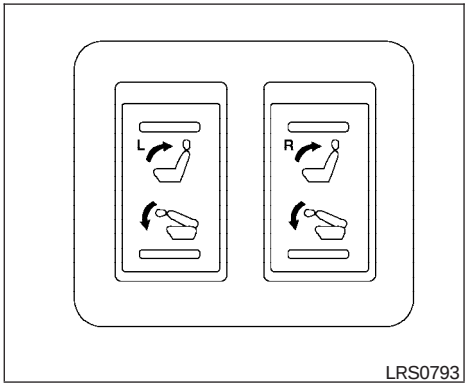

LRS0793

To fold down the 3rd row seats, press and hold the bottom portion of the switch.

To raise the 3rd row seats, press and hold the top portion of the switch.

A chime will sound three times to indicate the start of the operation.

A warning beep will sound 5 times if the seat isn't in the full upright or folded position when the ignition is put in the ON position. If the warning beep is still present after one complete cycle and if the seats are in the full upright or folded position, bring your vehicle in for service.

If the ignition is off, the power folding seats are always operational.

If the ignition is on, the power folding seats are only operational when the transmission is in P (Park) or N (Neutral).

If the engine is started during operation, the seat(s) will temporarily pause.

NOTE:

Operating the power folding seats can discharge the vehicle battery if the vehicle is not running.

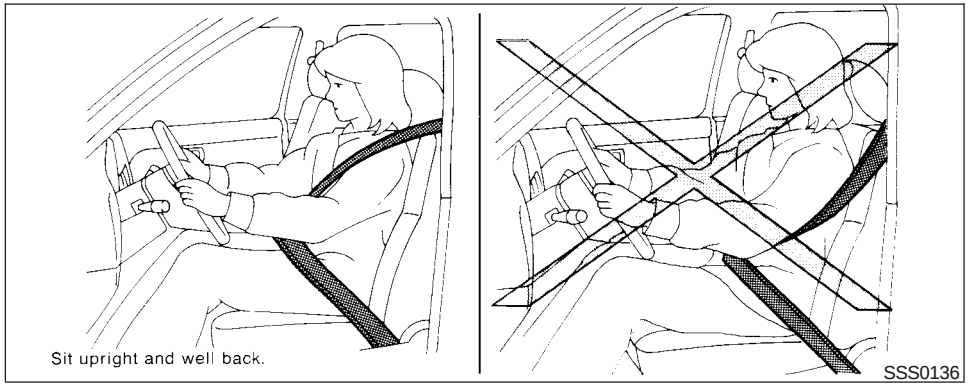

PRECAUTIONS ON SEAT BELT USAGE

If you are wearing your seat belt properly adjusted and you are sitting upright and well back in your seat with both feet on the floor, your chances of being injured or killed in an accident and/or the severity of injury may be greatly reduced. INFINITI strongly encourages you and all of your passengers to buckle up every time you drive, even if your seating position includes a supplemental air bag.

Most U.S. states and Canadian provinces or territories specify that seat belts be worn at all times when a vehicle is being driven.

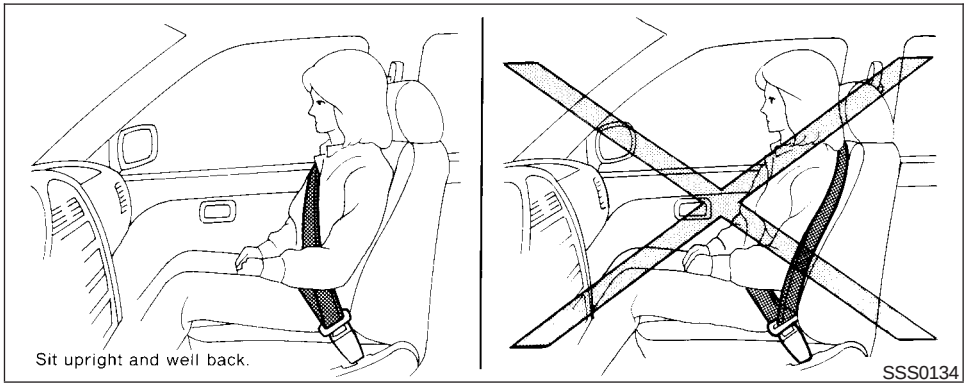

⚠ WARNING

- **Every person who drives or rides in this vehicle should use a seat belt at all times. Children should be properly restrained in the rear seat and, if appropriate, in a child restraint.**

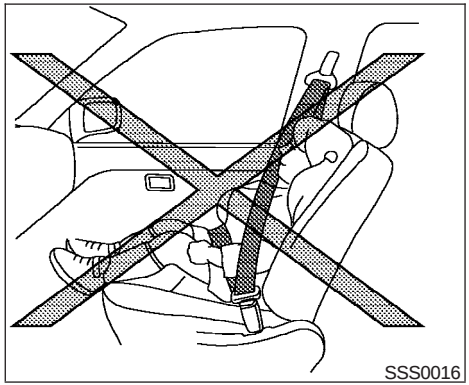

⚠ WARNING

- **The seat belt should be properly adjusted to a snug fit. Failure to do so may reduce the effectiveness of the entire restraint system and increase the chance or severity of injury in an accident. Serious injury or death can occur if the seat belt is not worn properly.**

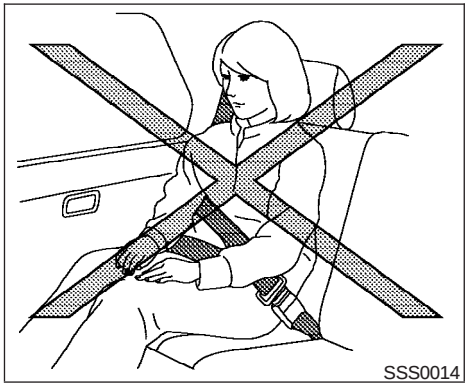

⚠ WARNING

- **Always route the shoulder belt over your shoulder and across your chest. Never put the belt behind your back, under your arm or across your neck. The belt should be away from your face and neck, but not falling off your shoulder.**
- **Position the lap belt as low and snug as possible AROUND THE HIPS, NOT THE WAIST. A lap belt worn too high could increase the risk of internal injuries in an accident.**
- **Be sure the seat belt tongue is securely fastened to the proper buckle.**
- **Do not wear the seat belt inside out or twisted. Doing so may reduce its effectiveness.**
- **Do not allow more than one person to use the same seat belt.**
- **Never carry more people in the vehicle than there are seat belts.**
- **If the seat belt warning light glows continuously while the ignition is turned ON with all doors closed and all seat belts fastened, it may indicate a malfunction in the system. Have the system checked by an INFINITI dealer.**
- **No changes should be made to the seat belt system. For example, do not modify the seat belt, add material, or install devices that may change the seat belt routing or tension. Doing so may affect the operation of the seat belt system. Modifying or tampering with the seat belt system may result in serious personal injury.**
- **Once a seat belt pretensioner has activated, it cannot be reused and must be replaced together with the retractor. See your INFINITI dealer.**
- **Removal and installation of pretensioner system components should be done by an INFINITI dealer.**
- **All seat belt assemblies, including retractors and attaching hardware, should be inspected after any collision by an INFINITI dealer. INFINITI recommends that all seat belt assemblies in use during a collision be replaced unless the collision was minor and the belts show no damage and continue to operate properly. Seat belt assemblies not in use during a collision should also be inspected and replaced if either damage or improper operation is noted.**
- **All child restraints and attaching hardware should be inspected after any collision. Always follow the restraint manufacturer's inspection instructions and replacement recommendations. The child restraints should be replaced if they are damaged.**

CHILD SAFETY

Children need adults to help protect them. They need to be properly restrained.

In addition to the general information in this manual, child safety information is available from many other sources, including doctors, teachers, government traffic safety offices, and community organizations. Every child is different, so be sure to learn the best way to transport your child.

There are three basic types of child restraint systems:

- Rear-facing child restraint
- Front-facing child restraint
- Booster seat

The proper restraint depends on the child's size. Generally, infants up to about 1 year and less than 20 lbs (9 kg) should be placed in rear facing child restraints. Front facing child restraints are available for children who outgrow rear facing child restraints and are at least one year old. Booster seats are used to help position a vehicle lap/shoulder belt on a child who can no longer use a front facing child restraint.

⚠ WARNING

Infants and children need special protection. The vehicle's seat belts may not fit them properly. The shoulder belt may come too close to the face or neck. The lap belt may not fit over their small hip bones. In an accident, an improperly fitting seat belt could cause serious or fatal injury. Always use appropriate child restraints.

All U.S. states and Canadian provinces or territories require the use of approved child restraints for infants and small children. See "Child Restraints" later in this section.

Also, there are other types of child restraints available for larger children for additional protection.

INFINITI recommends that all pre-teens and children be restrained in the rear seat. According to accident statistics, children are safer when properly restrained in the rear seat than in the front seat.

This is especially important because your vehicle has a supplemental restraint system (air bag system) for the front passenger. See "Supplemental restraint system" later in this section.

Infants

Infants up to at least one year old should be placed in a rear facing child restraint. INFINITI recommends that infants be placed in child restraints that comply with Federal Motor Vehicle Safety Standards or Canadian Motor Vehicle Safety Standards. You should choose a child restraint that fits your vehicle and always follow the manufacturer's instructions for installation and use.

Small Children

Children that are over one year old and weigh at least 20 lbs (9 kg) can be placed in a forward facing child restraint. Refer to the manufacturer's instructions for minimum and maximum weight and height recommendations. INFINITI recommends that small children be placed in child restraints that comply with Federal Motor Vehicle Safety Standards or Canadian Motor Vehicle Safety Standards. You should choose a child restraint that fits your vehicle and always follow the manufacturer's instructions for installation and use.

Larger children

Children who are too large for child restraints should be seated and restrained by the seat belts which are provided. The seat belt may not fit properly if the child is less than 4 ft 9 in

(142.5 cm) tall and weighs between 40 lbs (18 kg) and 80 lbs (36 kg). A booster seat should be used to obtain proper seat belt fit.

INFINITI recommends that a child be placed in a commercially available booster seat if the shoulder belt in the child's seating position fits close to the face or neck or if the lap portion of the seat belt goes across the abdomen. The booster seat should raise the child so that the shoulder belt is properly positioned across the top, middle portion of the shoulder and the lap belt is low on the hips. A booster seat can only be used in seating positions that have a three-point type seat belt. The booster seat should fit the vehicle seat and have a label certifying that it complies with Federal Motor Vehicle Safety Standards or Canadian Motor Vehicle Safety Standards. Once the child has grown so the shoulder belt is no longer on or near the face and neck, use the shoulder belt without the booster seat.

⚠ WARNING

Never let a child stand or kneel on any seat and do not allow a child in the cargo areas while the vehicle is moving. The child could be seriously injured or killed in an accident or sudden stop.

PREGNANT WOMEN

INFINITI recommends that pregnant women use seat belts. The seat belt should be worn snug, and always position the lap belt as low as possible around the hips, not the waist. Place the shoulder belt over your shoulder and across your chest. Never run the lap/shoulder belt over your abdominal area. Contact your doctor for specific recommendations.

INJURED PERSONS

INFINITI recommends that injured persons use seat belts. Check with your doctor for specific recommendations.

THREE-POINT TYPE SEAT BELT WITH RETRACTOR

⚠ WARNING

- **Every person who drives or rides in this vehicle should use a seat belt at all times.**
- **Do not ride in a moving vehicle when the seatback is reclined. This can be dangerous. The shoulder belt will not be against your body. In an accident, you could be thrown into it and receive neck or other serious injuries. You could also slide under the lap belt and receive serious internal injuries.**
- **For the most effective protection when the vehicle is in motion, the seat should be upright. Always sit well back in the seat with both feet on the floor and adjust the seat belt properly.**

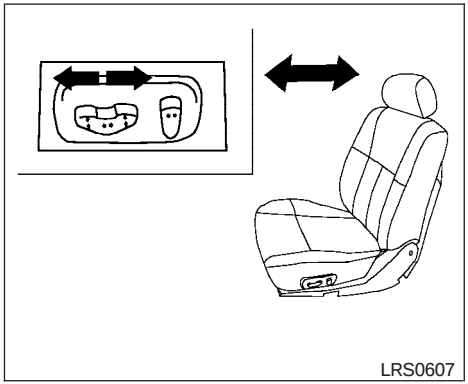

Power front seat shown

Fastening the seat belts

1. Adjust the seat. See “Seats” earlier in this section.

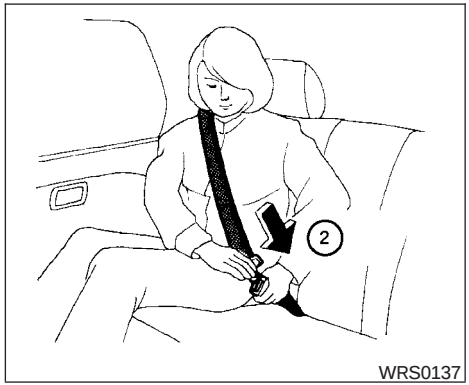

② Slowly pull the seat belt out of the retractor and insert the tongue into the buckle until you hear and feel the latch engage.

- **The retractor is designed to lock during a sudden stop or on impact. A slow pulling motion permits the seat belt to move, and allows you some freedom of movement in the seat.**
- **If the seat belt cannot be pulled from its fully retracted position, firmly pull the belt and release it. Then smoothly pull the belt out of the retractor.**

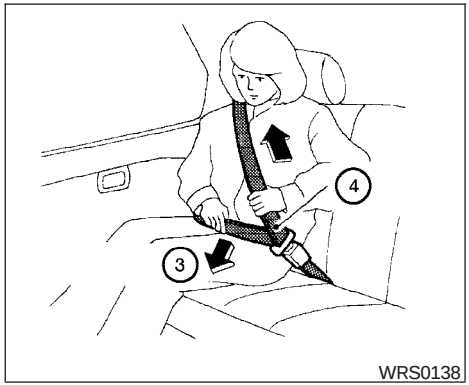

③ Position the lap belt portion **low and snug on the hips** as shown.

④ Pull the shoulder belt portion toward the retractor to take up extra slack. Be sure the shoulder belt is routed over your shoulder and across your chest.

The front passenger seat and the rear seating positions three-point seat belts have two modes of operation:

- Emergency Locking Retractor (ELR)
- Automatic Locking Retractor (ALR)

The Emergency Locking Retractor (ELR) mode allows the seat belt to extend and retract to allow the driver and passengers some freedom of movement in the seat. The ELR locks the seat belt when the vehicle slows down rapidly or during certain impacts.

The Automatic Locking Retractor (ALR) mode (child restraint mode) locks the seat belt for child restraint installation.

When the ALR mode is activated, the seat belt cannot be extended again until the seat belt tongue is detached from the buckle and fully retracted. The seat belt returns to the ELR mode after the seat belt fully retracts. See "Child restraints" later in this section for more information.

The ALR mode should be used only for child restraint installation. During normal seat belt use by a passenger, the ALR mode should not be activated. If it is activated it may cause uncomfortable seat belt tension. It can also change the operation of the front passenger air bag. See "Front passenger air bag and status light" later in this section.

⚠ WARNING

When fastening the seat belts, be certain that the seatbacks are completely secured in the latched position. If they are not completely secured, passengers may be injured in an accident or sudden stop.

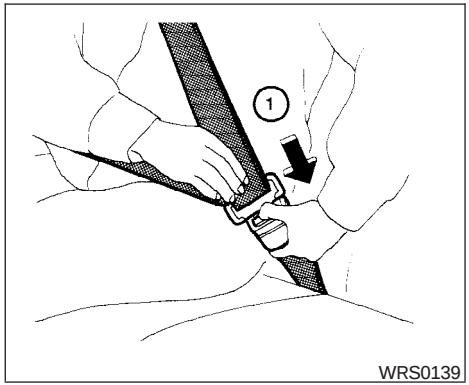

Unfastening the seat belts

① To unfasten the seat belt, press the button on the buckle. The seat belt automatically retracts.

Checking seat belt operation

Seat belt retractors are designed to lock seat belt movement by two separate methods:

- When the seat belt is pulled quickly from the retractor.
- When the vehicle slows down rapidly.

To increase your confidence in the seat belts, check the operation as follows.

- Grasp the shoulder belt and pull forward quickly. The retractor should lock and restrict further belt movement.

If the retractor does not lock during this check or if you have any questions about seat belt operation, see an INFINITI dealer.

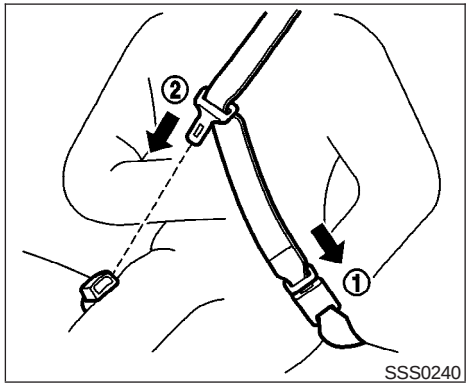

Center of the 3rd row bench seat

The 3rd row center seat belt has a connector tongue ① and a seat belt tongue ② . Both the connector tongue and the seat belt tongue must be securely latched for proper seat belt operation.

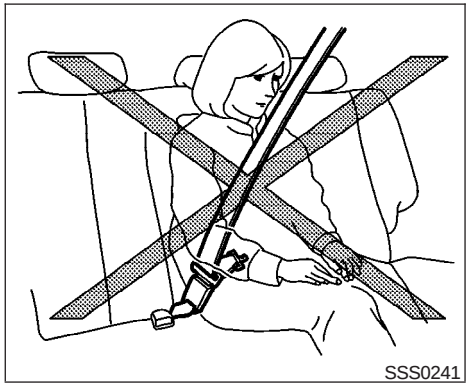

⚠ WARNING

- **Always fasten the connector tongue and the seat belt in the order shown.**
- **Always make sure both the connector tongue and the seat belt tongue are secured when using the seat belt or installing a child restraint. Do not use the seat belt or child restraint with only the seat belt tongue attached. This could result in serious personal injury in case of an accident or a sudden stop.**

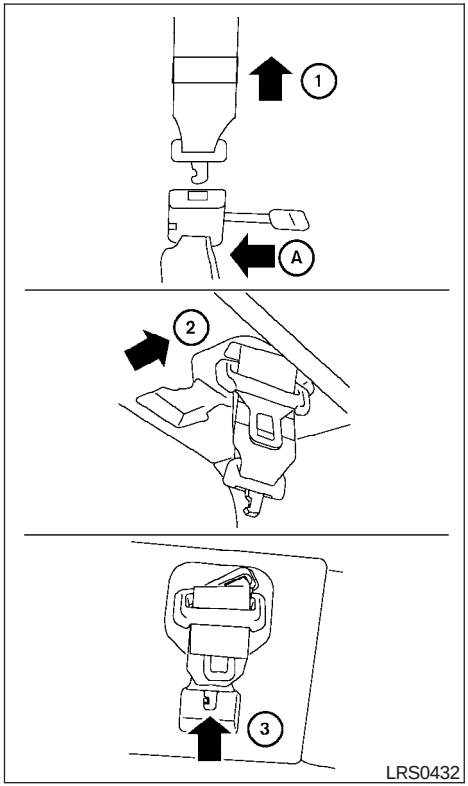

Stowing the 3rd row center seat belt

When folding down the 3rd row seat, the 3rd row center seat belt can be retracted into a stowed position as follows:

① Hold the connector tongue so that the seat belt does not retract suddenly when the tongue is released from the connector buckle. Release the connector tongue by inserting a suitable tool such as a key into the connector buckle Ⓐ.

② Retract the seat belt up to the retractor base.

③ Insert the seat belt tongue into the fabric sleeve so it will lay flat. Then secure the connector tongue into the retractor base.

⚠WARNING

- **Do not unfasten the rear center seat belt connector except when folding down the rear seat.**
- **When attaching the rear center seat belt connector, be certain that the seatbacks are completely secured in the latched position and the rear center seat belt connector is completely secured.**
- **If the rear center seat belt connector and the seatbacks are not secured in the correct position, serious personal injury may result in an accident or sudden stop.**

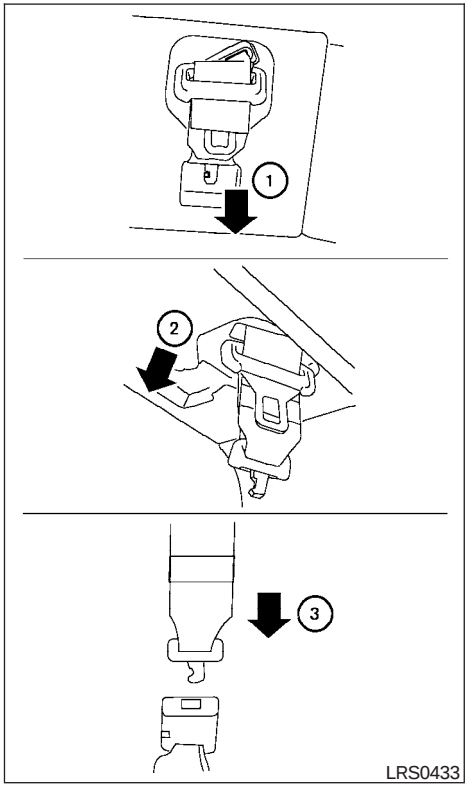

Attaching the 3rd row center seat belt

Always be sure the 3rd row center seat belt connector tongue and connector buckle are attached. Disconnect only when folding down the rear seat.

To connect the buckle:

① Pull out the connector tongue from the retractor base.

② Pull out the seat belt tongue from the fabric sleeve.

③ Pull the seat belt and secure the receiver buckle until it clicks.

The center seat belt connector tongue and receiver buckle are indicated by the > and < mark.

The center seat belt connector tongue can be attached only into the rear center seat belt connector buckle.

To fasten the seat belt, see “Fastening the seat belts” earlier in this section.

⚠WARNING

- **Do not unfasten the rear center seat belt connector except when folding down the rear seat.**
- **When attaching the rear center seat belt connector, be certain that the seatbacks are completely secured in the latched position and the rear center seat belt connector is completely secured.**
- **If the rear center seat belt connector and the seatbacks are not secured in the correct position, serious personal injury may result in an accident or sudden stop.**

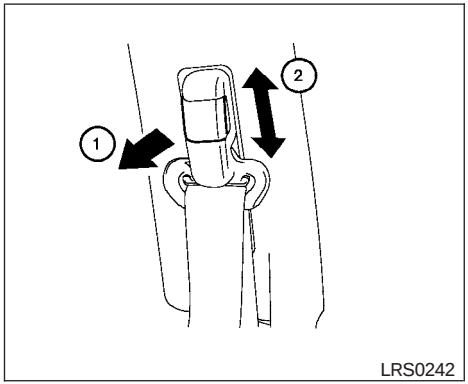

Front and 2nd row outboard seats

Shoulder belt height adjustment (front and 2nd row outboard seats)

The shoulder belt anchor height should be adjusted to the position best for you. (See "Precautions on seat belt usage" earlier in this section.) To adjust, pull out ① the adjustment button and move the shoulder belt anchor ② to the desired position, so the belt passes over the center of the shoulder. The belt should be away from your face and neck, but not falling off your shoulder. Release the adjustment button to lock the shoulder belt anchor into position.

⚠ WARNING

- **After adjustment, release the adjustment button and try to move the shoulder belt anchor up and down to make sure it is securely fixed in position.**
- **The shoulder belt anchor height should be adjusted to the position best for you. Failure to do so may reduce the effectiveness of the entire restraint system and increase the chance or severity of injury in an accident.**

SEAT BELT EXTENDERS

If, because of body size or driving position, it is not possible to properly fit the lap-shoulder belt and fasten it, an extender is available which is compatible with the installed seat belts. The extender adds approximately 8 in (200 mm) of length and may be used for either the driver or front passenger seating position. See an INFINITI dealer for assistance if an extender is required.

⚠ WARNING

- **Only INFINITI seat belt extenders, made by the same company which made the original equipment seat belts, should be used with INFINITI seat belts.**
- **Adults and children who can use the standard seat belt should not use an extender. Such unnecessary use could result in serious personal injury in the event of an accident.**
- **Never use seat belt extenders to install child restraints. If the child restraint is not secured properly, the child could be seriously injured in a collision or a sudden stop.**

SEAT BELT MAINTENANCE

- **To clean the seat belt webbing,** apply a mild soap solution or any solution recommended for cleaning upholstery or carpet. Then wipe with a cloth and allow the seat belts to dry in the shade. Do not allow the seat belts to retract until they are completely dry.
- **If dirt builds up in the shoulder belt guide** of the seat belt anchors, the seat belts may retract slowly. Wipe the shoulder belt guide with a clean, dry cloth.
- **Periodically check to see that the seat belt and the metal components,** such as buckles, tongues, retractors, flexible wires and anchors, work properly. If loose parts, deterioration, cuts or other damage on the webbing is found, the entire seat belt assembly should be replaced.

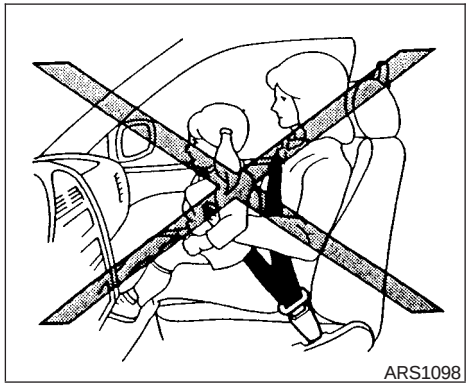
ARS1098

PRECAUTIONS ON CHILD RESTRAINTS

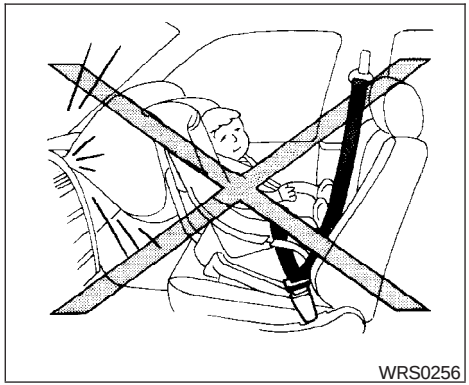
WRS0256

⚠ WARNING

- **Infants and small children should always be placed in an appropriate child restraint while riding in the vehicle. Failure to use a child restraint can result in serious injury or death.**
- **Infants and small children should never be carried on your lap. It is not possible for even the strongest adult to resist the forces of a severe accident. The child could be crushed between the adult and parts of the vehicle. Also, do not put the same seat belt around both your child and yourself.**

- **Even with the INFINITI Advanced Air Bag System, never install a rear facing child restraint in the front seat. An inflating front air bag could seriously injure or kill your child. A rear-facing child restraint must only be used in the rear seat.**
- **INFINITI recommends that the child restraint be installed in the rear seat. According to accident statistics, children are safer when properly restrained in the rear seat than in the front seat. If you must install a front facing child restraint in the front seat, see "Child restraint installation using the seat belts" later in this section.**
- **Improper use or improper installation of a child restraint can increase the risk or severity of injury for both the child and other occupants of the vehicle and can lead to serious injury or death in an accident.**
- **Follow all of the child restraint manufacturer's instructions for installation and use. When purchasing a child restraint, be sure to select one which will fit your child and vehicle. It may not be possible to properly install some types of child restraints in your vehicle.**
- **If the child restraint is not anchored properly, the risk of a child being injured in a collision or a sudden stop greatly increases.**
- **Child restraint anchor points are designed to withstand only those loads imposed by correctly fitted child restraints. Under no circumstances are they to be used for adult seat belts or harnesses.**
- **Adjustable seatbacks should be positioned to fit the child restraint, but as upright as possible.**
- **After attaching the child restraint, test it before you place the child in it. Push it from side to side while holding the seat near the LATCH attachment or by the seat belt path. Try to tug it forward and check to see if the belt holds the restraint in place. The child restraint should not move more than 1 inch (25 mm). If the restraint is not secure, tighten the belt as necessary, or put the restraint in another seat and test it again. You may need to try a different child restraint. Not all child restraints fit in all types of vehicles.**
- **When your child restraint is not in use, keep it secured with the LATCH System or a seat belt to prevent it from being thrown around in case of a sudden stop or accident.**

⚠ CAUTION

Remember that a child restraint left in a closed vehicle can become very hot. Check the seating surface and buckles before placing your child in the child restraint.

This vehicle is equipped with a universal child restraint lower anchor system, referred to as the Lower Anchors and Tethers for CHildren System or LATCH. Some child restraints include two rigid or webbing-mounted attachments that can be connected to these lower anchors. For details, see the "Lower Anchors and Tethers for CHildren System (LATCH)" later in this section.

If you do not have a LATCH compatible child restraint, the vehicle seat belts can be used. See "Child restraint installation using the seat belts" later in this section. In general, child restraints are also designed to be installed with a lap/shoulder seat belt.

Several manufacturers offer child restraints for infants and small children of various sizes. When selecting any child restraint, keep the following points in mind:

- Choose only a restraint with a label certifying that it complies with Federal Motor Vehicle Safety Standard 213 or Canadian Motor Vehicle Safety Standard 213.
- Check the child restraint in your vehicle to be sure it is compatible with the vehicle's seat and seat belt system.
- If the child restraint is compatible with your vehicle, place your child in the child restraint and check the various adjustments to be sure the child restraint is compatible with your child. Choose a child restraint that is designed for your child's height and weight. Always follow all recommended procedures.

All U.S. states and Canadian provinces or territories require that infants and small children be restrained in an approved child restraint at all times while the vehicle is being operated. Canadian law requires the top tether strap on front-facing child restraints be secured to the designated anchor point on the vehicle.

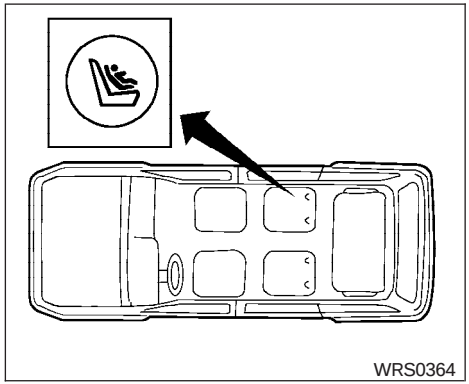

LATCH system anchor locations – captains chairs

LOWER ANCHORS AND TETHERS FOR CHILDREN SYSTEM (LATCH)

Your vehicle is equipped with special anchor points that are used with Lower Anchors and Tethers for CHildren System (LATCH) compatible child restraints. This system may also be referred to as the ISOFIX or ISOFIX compatible system. With this system, you do not have to use a vehicle seat belt to secure the child restraint.

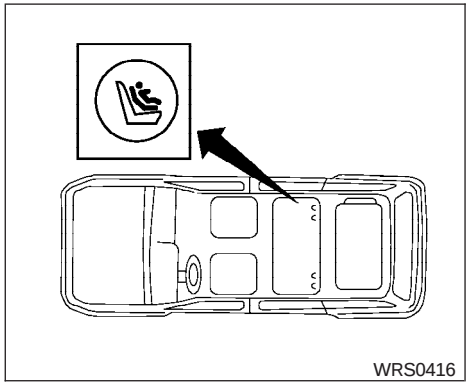

LATCH system anchor locations – bench seat

The LATCH anchor points are provided to install child restraints in the following positions only:

- 2nd row captain's chairs (if so equipped).
- 2nd row bench seat outboard positions only (if so equipped).

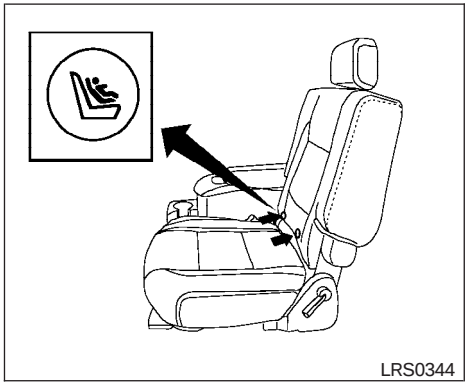

LATCH label locations 2nd row captain's chairs (if so equipped)

LATCH lower anchor point locations

The LATCH anchors are located at the rear of the seat cushion near the seatback. A label is attached to the seatback to help you locate the LATCH anchors.

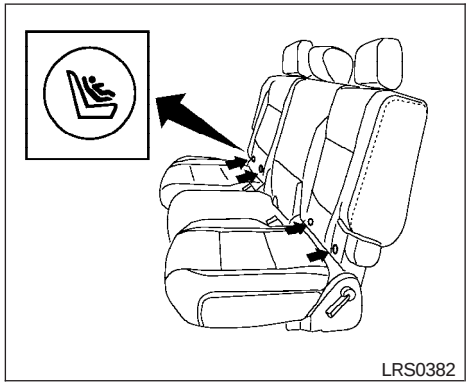

LATCH label locations 2nd row bench (if so equipped)

⚠ WARNING

- **Attach LATCH compatible child restraints only at the locations shown in the illustration. If a child restraint is not secured properly, your child could be seriously injured or killed in an accident.**
- **Do not secure a child restraint in the center rear seating position using the LATCH anchors. The child restraint will not be secured properly.**

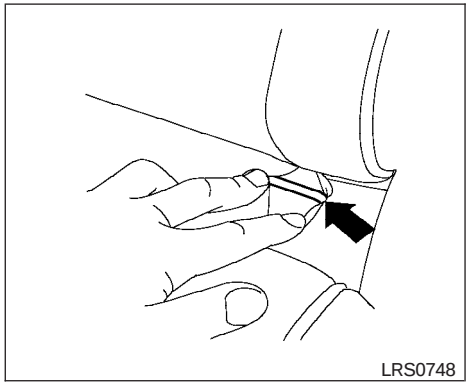

LATCH lower anchor location

- **Child restraint anchor points are designed to withstand only those loads imposed by correctly fitted child restraints. Under no circumstance are they to be used for adult seat belts or harnesses.**

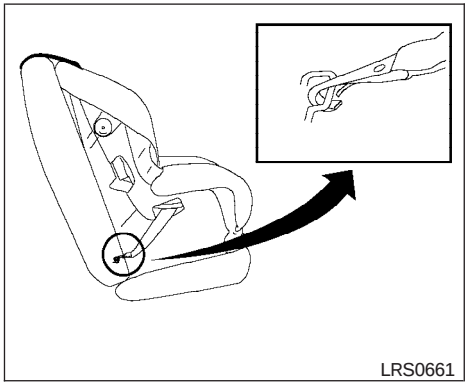

LATCH webbing-mounted attachment

Installing child restraint LATCH anchor attachments

LATCH compatible child restraints include two rigid or webbing-mounted attachments that can be connected to two anchors located at certain seating positions in your vehicle. With this system, you do not have to use a vehicle seat belt to secure the child restraint. Check your child restraint for a label stating that it is compatible with LATCH. This information may also be in the instructions provided by the child restraint manufacturer.

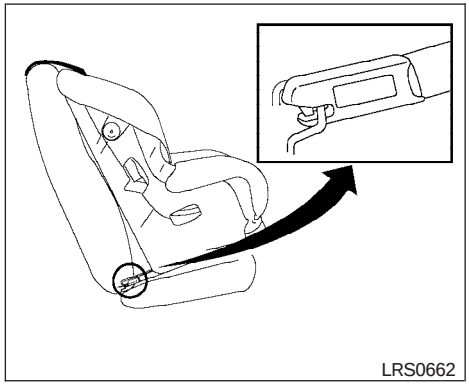

LATCH rigid-mounted attachment

LATCH child restraints generally require the use of a top tether strap. See “Top tether strap child restraint” later in this section for installation instructions.

When installing a child restraint, carefully read and follow the instructions in this manual and those supplied with the child restraint. See “Child restraint installation using LATCH ” in this section.

TOP TETHER STRAP CHILD RESTRAINT

If the manufacturer of your child restraint requires the use of a top tether strap, it must be secured to the anchor point.

⚠ WARNING

- **Child restraint anchor points are designed to withstand only those loads imposed by correctly fitted child restraints. Under no circumstances are they to be used for adult seat belts or harnesses.**
- **The child restraint top tether strap may be damaged by contact with items in the cargo area. Secure any items in the cargo area. Your child could be seriously injured or killed in a collision if the top tether strap is damaged.**

Top Tether Anchor Point Locations

Anchor points are located in the following locations:

- 2nd row bench (if so equipped) on the floor behind the outboard seating positions as shown.
- 2nd row captain’s chairs (if so equipped) on the floor behind the seats as shown.

- 3rd row bench seat on the floor of the cargo area behind the center seat position as shown.

If you have any questions when installing a top tether strap child restraint on the rear seat, consult your INFINITI dealer for details.

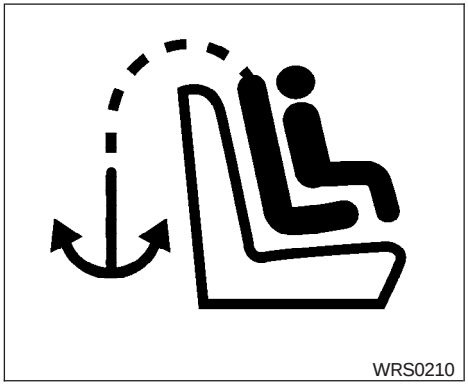

Label

Flaps are provided in the carpet for easy access to the anchor points for the 2nd row captain's chairs or 2nd row bench seats and are marked with the label shown.

Installing top tether strap

First, secure the child restraint with the LATCH system (2nd row captain's or bench outboard seating positions only), or the seat belt as applicable.

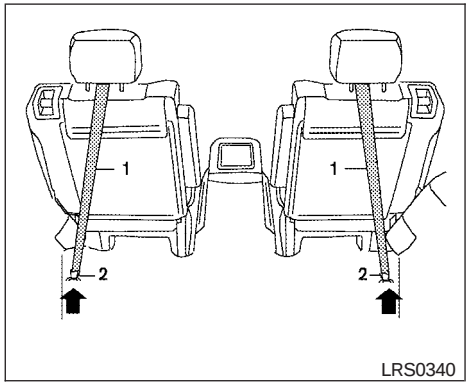

2nd row captain's chairs (if so equipped)

2nd row captain's chairs or bench seat (if so equipped)

1. Top tether strap
2. Anchor point

For the 2nd row captain's chairs or bench seat (if so equipped), install the top tether strap as follows:

1. Raise the head restraint.
2. Position the top tether strap over the top of the seatback and under the head restraint.

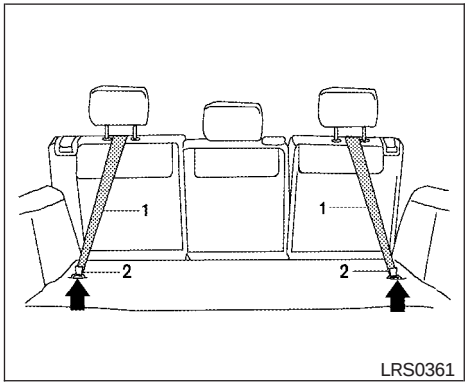

2nd row bench seat (if so equipped)

3. Secure the tether strap to the tether anchor point on the seat directly behind the child restraint.
4. Tighten the tether strap according to the manufacturer's instructions to remove any slack.

For best child restraint fit, see the child restraint installation instructions in this section and the child restraint manufacturer's instructions.

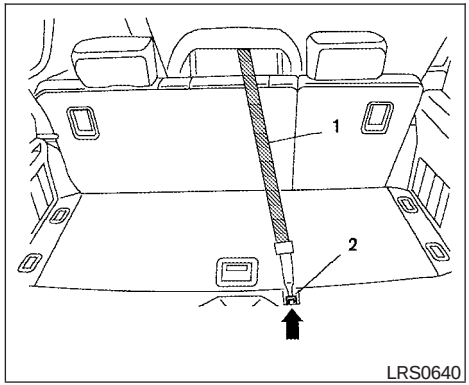

3rd row bench seat

1. Top tether strap
2. Anchor point

⚠ WARNING

In the 3rd row bench seat, a child restraint with a top tether strap can only be used in the center position. Do not place in an outboard seating position and attempt to angle the tether strap to the center position.

The center position of the 3rd row bench seat is the seating position that can use a top tether strap.

For the 3rd row bench seat, install the top tether strap as follows:

1. Position the top tether strap over the top of the center seating position seatback.
2. Secure the tether strap to the tether anchor point on floor behind the child restraint.
3. Tighten the tether strap according to the manufacturer's instructions to remove any slack.

For best child restraint fit, see the child restraint installation instructions in this section and the child restraint manufacturer's instructions.

CHILD RESTRAINT INSTALLATION USING LATCH

⚠ WARNING

- **Attach LATCH compatible child restraints only at the locations shown. For the LATCH lower anchor locations, see "Lower Anchors and Tethers for Children System (LATCH)" in this section. If a child restraint is not secured properly, your child could be seriously injured or killed in an accident.**
- **The LATCH anchors are designed to withstand only those loads imposed by correctly fitted child restraints. Under no circumstance are they to be used for adult seat belts or harnesses.**
- **Inspect the lower anchors by inserting your fingers into the lower anchor area and feeling to make sure there are no obstructions over the LATCH anchors, such as seat belt webbing or seat cushion material. The child restraint will not be secured properly if the LATCH anchors are obstructed.**

Front-facing

Follow these steps to install a front-facing child restraint in the 2nd row seats using LATCH:

1. Recline the seatback if the seatback is adjustable to assist in attaching the child restraint to the lower anchors.
2. Position the child restraint on the seat. Always follow the child restraint manufacturer's instructions.

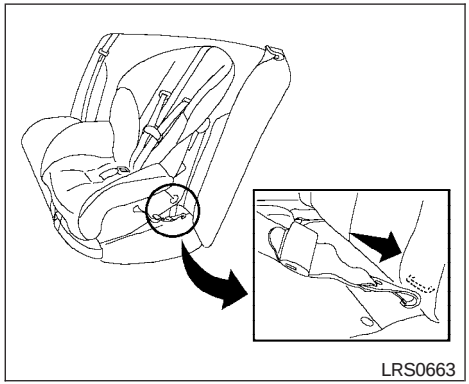

Front-facing web-mounted – step 3

3. Secure the child restraint anchor attachments to the LATCH lower anchors. Check to make sure the LATCH attachment is properly attached to the lower anchors.
4. Return the seatback to its normal upright and locked position.

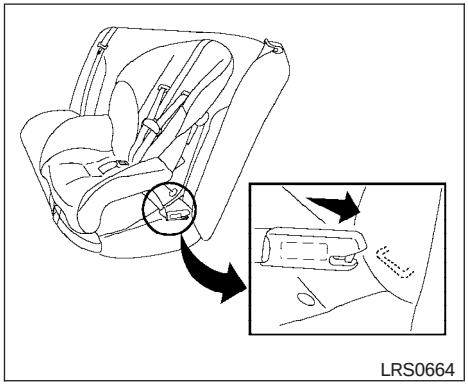

Front-facing rigid-mounted – step 3

The back of the child restraint should be secured against the vehicle seatback. If necessary, adjust or remove the head restraint to obtain the correct child restraint fit. See “Head restraint adjustment” in this section. If the head restraint is removed, store it in a secure place. Be sure to reinstall the head restraint when the child restraint is removed. If the seating position does not have an adjustable head restraint and it is interfering with the proper child restraint fit, try another seating position or a different child restraint.

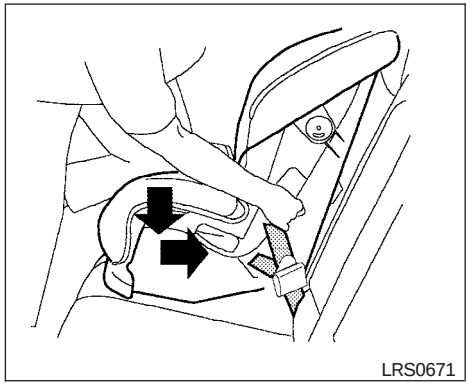

Front facing – step 5

5. For child restraints that are equipped with webbing mounted attachments, remove any additional slack from the anchor attachments. Press downward and rearward firmly in the center of the child restraint with your knee to compress the vehicle seat cushion and seatback while tightening the webbing of the anchor attachments.

6. If the child restraint is equipped with a top tether strap, route the top tether strap and secure the tether strap to the tether anchor point. See “Top tether strap child restraint” in this section.

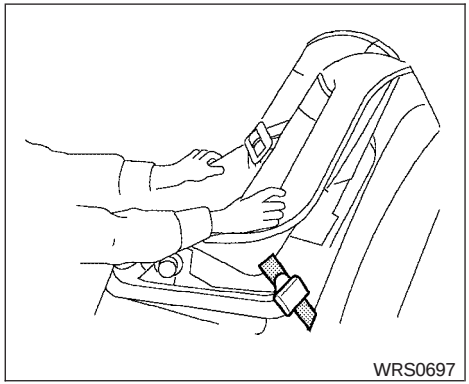

Front facing – step 7

7. Before placing the child in the child restraint, hold the child restraint near the LATCH attachment and use force to push the child restraint from side to side, and tug it forward to make sure that it is securely held in place. It should not move more than 1 in (25 mm). If it does move more than 1 in (25 mm), pull again on the anchor attachments to further tighten the child restraint. If you are unable to properly secure the restraint, move the restraint to another seating position and try again, or try a different child restraint. Not all child restraints fit in all types of vehicles.

8. Check to make sure the child restraint is properly secured prior to each use. If the child restraint is loose, repeat steps 4 through 7.

Rear-facing

Follow these steps to install a rear-facing child restraint in the 2nd row seats using LATCH:

1. Recline the seatback if the seatback is adjustable, to assist in attaching the child restraint to the lower anchors.
2. Position the child restraint on the seat. Always follow the child restraint manufacturer's instructions.

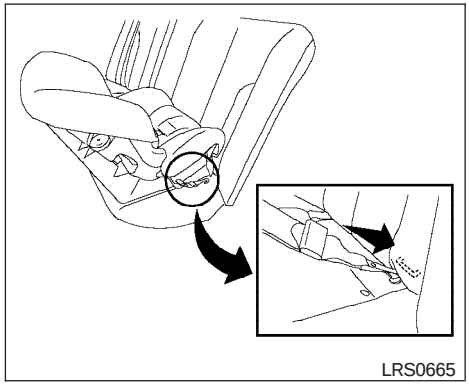

Rear-facing web-mounted – step 3

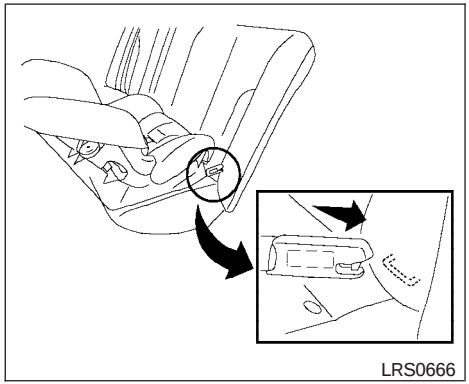

Rear-facing rigid-mounted – step 3

3. Secure the child restraint anchor attachments to the LATCH lower anchors. Check to make sure the LATCH attachment is properly attached to the lower anchors.
4. Return the seatback to its normal upright and locked position.

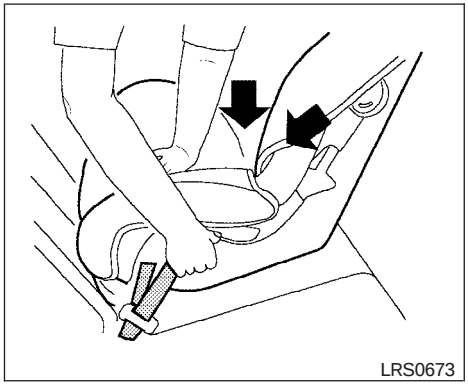

Rear facing – step 5

5. For child restraints that are equipped with webbing mounted attachments, remove any additional slack from the anchor attachments. Press downward and rearward firmly in the center of the child restraint with your hand to compress the vehicle seat cushion and seatback while tightening the webbing of the anchor attachments.

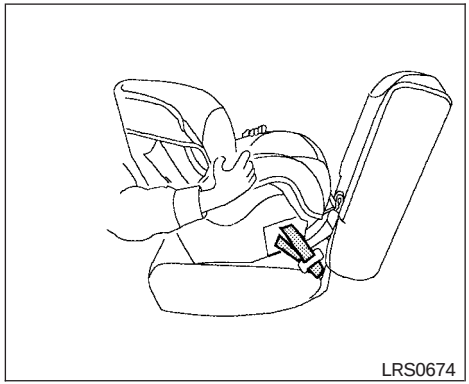

Rear facing – step 6

6. Before placing the child in the child restraint, hold the child restraint near the LATCH attachment and use force to push the child restraint from side to side, and tug it forward to make sure that it is securely held in place. It should not move more than 1 in (25 mm). If it does move more than 1 in (25 mm), pull again on the anchor attachments to further tighten the child restraint. If you are unable to properly secure the restraint, move the restraint to another seating position and try again, or try a different child restraint. Not all child restraints fit in all types of vehicles.

7. Check to make sure the child restraint is properly secured prior to each use. If the child restraint is loose, repeat steps 3 through 6.

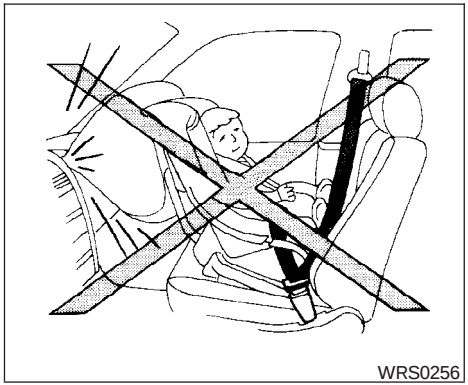

CHILD RESTRAINT INSTALLATION USING THE SEAT BELTS

⚠ WARNING

- **Even with the INFINITI Advanced Air Bag System, never install a rear facing child restraint in the front passenger seat. Front air bags inflate with great force. A rear facing child restraint could be struck by the front air bag in a crash and could seriously injure or kill your child.**
- **INFINITI recommends that child restraints be installed in the rear seat. However, if you must install a forward-facing child restraint in the front passenger seat, move the passenger seat to the rearmost position. Also, be sure the front passenger air bag status light is illuminated to indicate the passenger air bag is OFF. See "Front passenger air bag and status light" later in this section for details.**
- **The three-point seat belt in your vehicle is equipped with an Automatic Locking Retractor (ALR) which must be used when installing a child restraint.**
- **Failure to use the ALR mode will result in the child restraint not being properly secured. The restraint could tip over or otherwise be unsecured and cause injury to the child in a sudden stop or collision. Also, it can change the operation of the front passenger air bag. See "Front passenger air bag status" later in this section.**
- **When using the rear center seat belt to install a child restraint, make sure the connector tongue and the seat belt tongue are secured. Do not use the seat belt with only the seat belt tongue attached. This could result in serious personal injury in case of an accident or sudden stop.**
- **A child restraint with a top tether strap should not be used in the front passenger seat.**

The instructions in this section apply to child restraint installation using the vehicle seat belts in the rear seats or the front passenger seat.

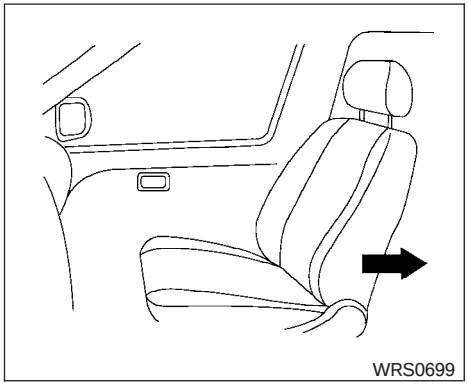

Front-facing (front passenger seat) – step 1

Front-facing

Follow these steps to install a front-facing child restraint using the vehicle seat belt in the rear seats or in the front passenger seat:

1. **If you must install a child restraint in the front seat, it should be placed in a front-facing direction only. Move the seat to the rearmost position. Child restraints for infants must be used in the rear-facing direction and therefore must not be used in the front seat.**
2. Position the child restraint on the seat. Always follow the child restraint manufacturer's instructions

The back of the child restraint should be secured against the vehicle seatback. If necessary, adjust or remove the head restraint to obtain the correct child restraint fit. See "Head restraint adjustment" in this section.

If the head restraint is removed, store it in a secure place. Be sure to install the head restraint when the child restraint is removed. If the seating position does not have an adjustable head restraint and it is interfering with the proper child restraint fit, try another seating position or a different child restraint.

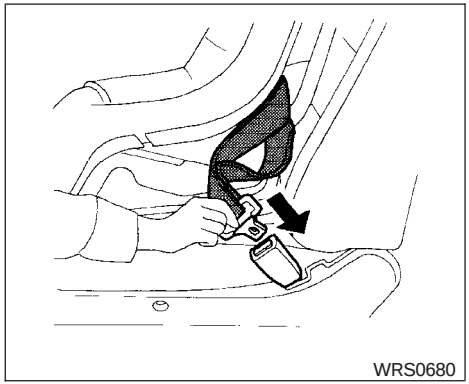

Front facing – step 3

3. Route the seat belt tongue through the child restraint and insert it into the buckle until you hear and feel the latch engage. Be sure to follow the child restraint manufacturer's instructions for belt routing.

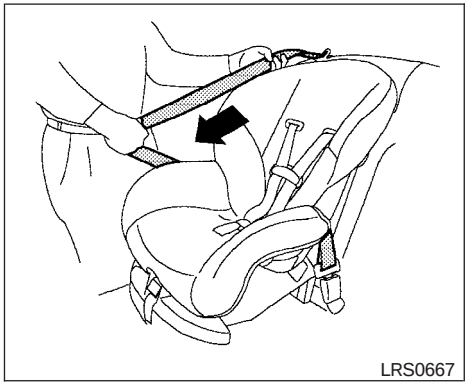

Front facing – step 4

4. Pull the shoulder belt until the belt is fully extended. At this time, the seat belt retractor is in the Automatic Locking Retractor (ALR) mode (child restraint mode). It reverts to the Emergency Locking Retractor (ELR) mode when the seat belt is fully retracted.

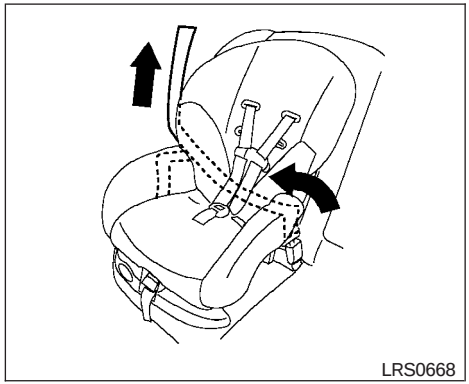

Front facing – step 5

5. Allow the seat belt to retract. Pull up on the shoulder belt to remove any slack in the belt.

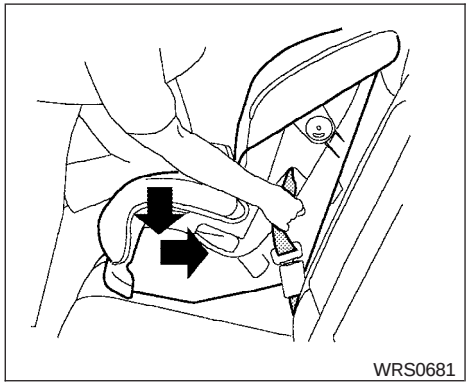

Front facing – step 6

6. Remove any additional slack from the seat belt; press downward and rearward firmly in the center of the child restraint with your knee to compress the vehicle seat cushion and seatback while pulling up on the seat belt.

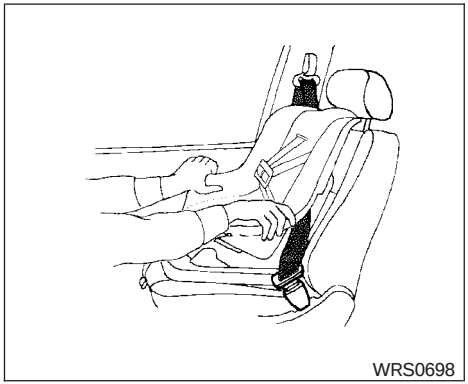

Front facing – step 7

7. If the child restraint is equipped with a top tether strap, route the top tether strap and secure the tether strap to the tether anchor point. See “Top tether strap child restraint” in this section. Do not install child restraints that require the use of a top tether strap to seating positions that do not have a top tether anchor.
8. Before placing the child in the child restraint, hold the child restraint near the seat belt path and use force to push the child restraint from side to side, and tug it forward to make sure that it is securely held in place. It should not move more than 1 in (25 mm). If it does move more than 1 in (25 mm), pull again on the shoulder belt to further tighten the child restraint. If you are unable to properly secure the restraint, move the restraint to another seating position and try again, or try a different child restraint. Not all child restraints fit in all types of vehicles.
9. Check that the retractor is in the ALR mode by trying to pull more seat belt out of the retractor. If you cannot pull any more belt webbing out of the retractor, the retractor is in the ALR mode.
10. Check to make sure the child restraint is properly secured prior to each use. If the seat belt is not locked, repeat steps 3 through 8.

Front facing – step 11

11. If the child restraint is installed in the front passenger seat, turn the ignition switch to the ON position. The front passenger air bag status light should illuminate. If this light is not illuminated see ″Front passenger air bag and status light″ in this section. **Move the child restraint to another seating position.** Have the system checked by an INFINITI dealer.

After the child restraint is removed and the seat belt is fully retracted, the ALR mode (child restraint mode) is canceled.

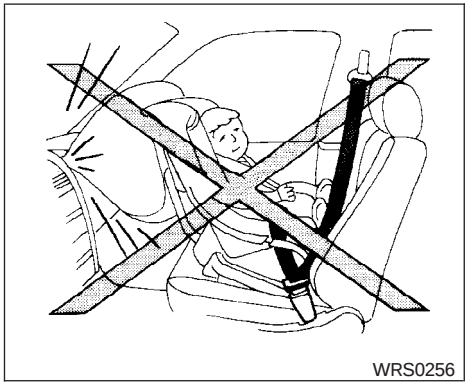

Rear-facing – step 1

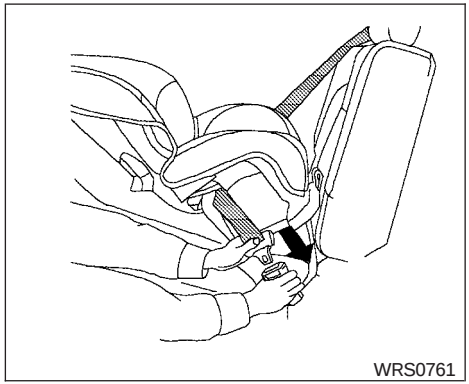

Rear-facing – step 2

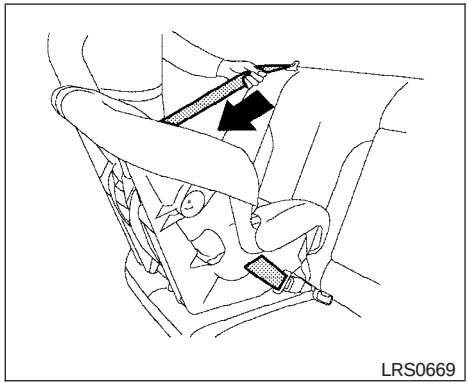

Rear-facing – step 3

Rear-facing

Follow these steps to install a rear-facing child restraint using the vehicle seat belt in the rear seats:

1. **Child restraints for infants must be used in the rear-facing direction and therefore must not be used in the front seat.** Position the child restraint on the seat. Always follow the restraint manufacturer's instructions.
2. Route the seat belt tongue through the child restraint and insert it into the buckle until you hear and feel the latch engage. Be sure to follow the child restraint manufacturer's instructions for belt routing.
3. Pull the shoulder belt until the belt is fully extended. At this time, the seat belt retractor is in the Automatic Locking Retractor (ALR) mode (child restraint mode). It reverts to the Emergency Locking Retractor (ELR) mode when the seat belt is fully retracted.

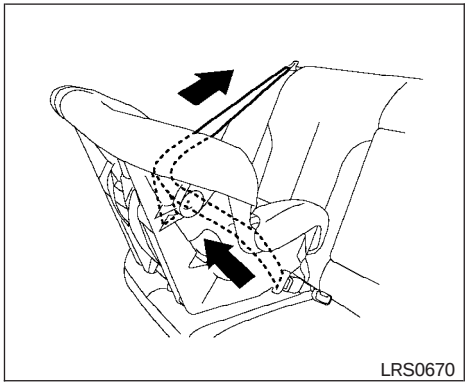

Rear-facing – step 4

4. Allow the seat belt to retract. Pull up on the shoulder belt to remove any slack in the belt.

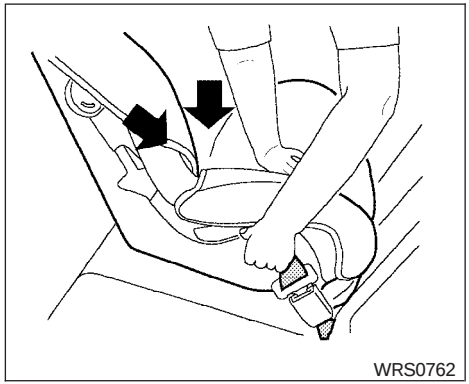

Rear-facing – step 5

5. Remove any additional slack from the child restraint; press downward and rearward firmly in the center of the child restraint to compress the vehicle seat cushion and seat-back while pulling up on the seat belt.

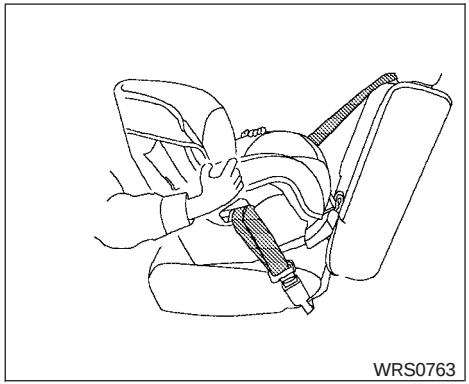

Rear-facing – step 6

6. Before placing the child in the child restraint, hold the child restraint near the seat belt path and use force to push the child restraint from side to side, and tug it forward to make sure that it is securely held in place. It should not move more than 1 in (25 mm). If it does move more than 1 in (25 mm), pull again on the shoulder belt to further tighten the child restraint. If you are unable to properly secure the restraint, move the restraint to another rear seating position and try again, or try a different child restraint. Not all child restraints fit in all types of vehicles.

7. Check that the retractor is in the ALR mode by trying to pull more seat belt out of the retractor. If you cannot pull any more seat belt webbing out of the retractor, the retractor is in the ALR mode.
8. Check to make sure that the child restraint is properly secured prior to each use. If the seat belt is not locked, repeat steps 3 through 7.

After the child restraint is removed and the seat belt fully retracted, the ALR mode (child restraint mode) is canceled.

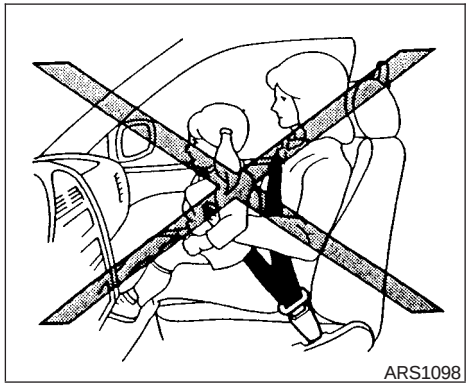

PRECAUTIONS ON BOOSTER SEATS

⚠ WARNING

- **Infants and small children should always be placed in an appropriate child restraint while riding in the vehicle. Failure to use a child restraint or booster seat can result in serious injury or death.**
- **Infants and small children should never be carried on your lap. It is not possible for even the strongest adult to resist the forces of a severe accident. The child could be crushed between the adult and parts of the vehicle. Also, do not put the same seat belt around both your child and yourself.**
- **INFINITI recommends that the booster seat be installed in the rear seat. According to accident statistics, children are safer when properly restrained in the rear seat than in the front seat. If you must install a booster seat in the front seat, see "Booster seat installation" in this section.**
- **A booster seat must only be installed in a seating position that has a lap/shoulder belt. Failure to use a three-point type seat belt with a booster seat can result in a serious injury in sudden stop or collision.**
- **Improper use or improper installation of a booster seat can increase the risk or severity of injury for both the child and other occupants of the vehicle and can lead to serious injury or death in an accident.**

- **Do not use towels, books, pillows or other items in place of a booster seat. Items such as these may move during normal driving or a collision and result in serious injury or death. Booster seats are designed to be used with a lap/shoulder belt. Booster seats are designed to properly route the lap and shoulder portions of the seat belt over the strongest portions of a child's body to provide the maximum protection during a collision.**
- **Follow all of the booster seat manufacturer's instructions for installation and use. When purchasing a booster seat, be sure to select one which will fit your child and vehicle. It may not be possible to properly install some types of booster seats in your vehicle.**
- **If the booster seat and seat belt is not used properly, the risk of a child being injured in a collision or a sudden stop greatly increases.**
- **Adjustable seatbacks should be positioned to fit the booster seat, but as upright as possible.**
- **After placing the child in the booster seat and fastening the seat belt, make sure the shoulder portion of the belt is away from the child's face and neck and the lap portion of the belt does not cross the abdomen.**
- **Do not put the shoulder belt behind the child or under the child's arm. If you must install a booster seat in the front seat, see "Booster seat installation" later in this section.**
- **When your booster seat is not in use, keep it secured with a seat belt to prevent it from being thrown around in case of a sudden stop or accident.**

⚠ CAUTION

Remember that a booster seat left in a closed vehicle can become very hot. Check the seating surface and buckles before placing your child in the booster seat.

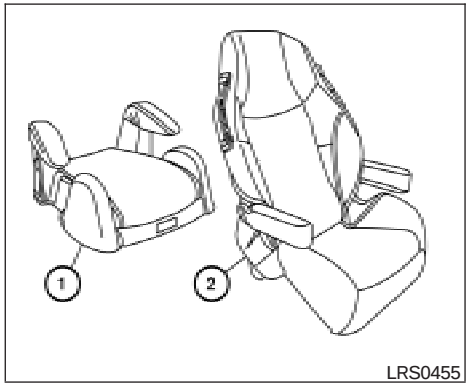

Booster seats of various sizes are offered by several manufacturers. When selecting any booster seat, keep the following points in mind:

- Choose only a booster seat with a label certifying that it complies with Federal Motor Vehicle Safety Standard 213 or Canadian Motor Vehicle Safety Standard 213.
- Check the booster seat in your vehicle to be sure it is compatible with the vehicle's seat and seat belt system.

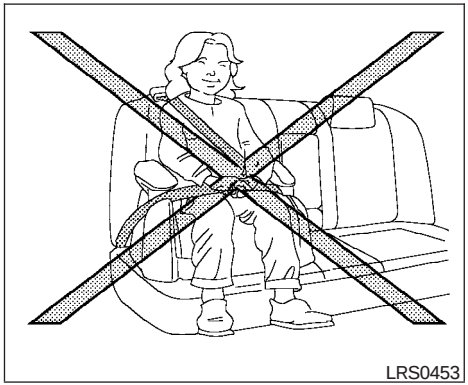

- Make sure the child's head will be properly supported by the booster seat or vehicle seat. The seatback must be at or above the center of the child's ears. For example, if a low back booster seat ① is chosen, the vehicle seatback must be at or above the center of the child's ears. If the seatback is lower than the center of the child's ears, a high back booster seat ② should be used.
- If the booster seat is compatible with your vehicle, place your child in the booster seat and check the various adjustments to be sure the booster seat is compatible with your child. Always follow all recommended procedures.

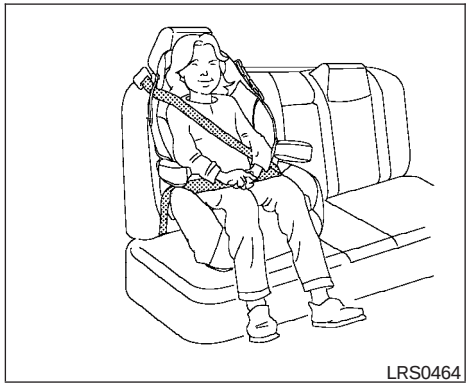

All U.S. states and Canadian provinces or territories require that infants and small children be restrained in an approved child restraint at all times while the vehicle is being operated.

The instructions in this section apply to booster seat installation in the rear seats or the front passenger seat.

BOOSTER SEAT INSTALLATION

⚠ WARNING

INFINITI recommends that booster seats be installed in the rear seat. However, if you must install a booster seat in the front passenger seat, move the passenger's seat to the rearmost position.

⚠ CAUTION

Do not use the lap/shoulder belt Automatic Locking Retractor mode when using a booster seat with the seat belts.

Follow these steps to install a booster seat in the rear seat or in the front passenger seat:

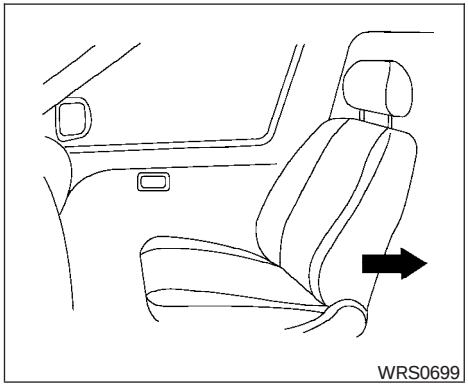

1. **If you must install a booster seat in the front seat, move the seat to the rearmost position.**
2. Position the booster seat on the seat. Only place it in a front facing direction. Always follow the booster seat manufacturer's instructions.

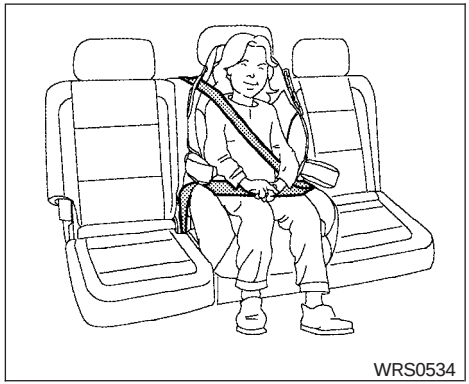

Rear center position

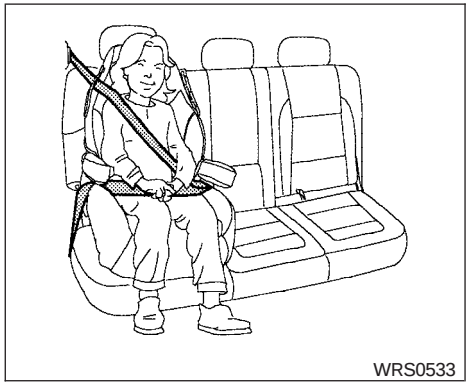

Rear outboard position

3. The booster seat should be positioned on the vehicle seat so that it is stable. If necessary, adjust or remove the head restraint to obtain the correct booster seat fit. See "Head restraint adjustment" earlier in this section. If the head restraint is removed, store it in a secure place. Be sure to install the head restraint when the booster seat is removed. If the seating position does not have an adjustable head restraint and it is interfering with the proper booster seat fit, try another seating position or a different booster seat.

4. Position the lap portion of the seat belt low and snug on the child's hips. Be sure to follow the booster seat manufacturer's instructions for adjusting the belt routing.
5. Pull the shoulder belt portion of the seat belt toward the retractor to take up extra slack. Be sure the shoulder belt is positioned across the top, middle portion of the child's shoulder. Be sure to follow the booster seat manufacturer's instructions for adjusting the belt routing.

Front passenger position

6. Follow the warnings, cautions and instructions for properly fastening a seat belt shown in the "Three-point seat belt with retractor" earlier in this section.

7. If the booster seat is installed in the front passenger seat, turn the ignition switch to the ON position. The front passenger air bag status light may or may not illuminate, depending on the size of the child and the type of booster seat being used. See "Front passenger air bag and status light" later in this section.

SUPPLEMENTAL RESTRAINT SYSTEM

PRECAUTIONS ON SUPPLEMENTAL RESTRAINT SYSTEM

This Supplemental Restraint System (SRS) section contains important information concerning the following systems:

- Driver and passenger supplemental front-impact air bag (INFINITI Advanced Air Bag System)
- Front seat-mounted side-impact supplemental air bag
- Roof-mounted curtain side-impact and rollover supplemental air bag
- Seat belt with pretensioner

Supplemental front-impact air bag system: The INFINITI Advanced Air Bag System can help cushion the impact force to the head and chest of the driver and front passenger in certain frontal collisions.

Front seat-mounted side-impact supplemental air bag system: This system can help cushion the impact force to the chest area of the driver and front passenger in certain side-impact collisions. The supplemental side air bag is designed to inflate on the side where the vehicle is impacted.

Roof-mounted curtain side-impact and rollover supplemental air bag system: This system can help cushion the impact force to the head of occupants in front and rear outboard seating positions in certain side-impact or rollover collisions. In a side impact, the curtain air bags are designed to inflate on the side where the vehicle is impacted. In a rollover both curtain and rollover air bags are designed to inflate and remain inflated for a short time.

These supplemental restraint systems are designed to **supplement** the crash protection provided by the seat belts and are **not a substitute** for them. Seat belts should always be correctly worn and the occupant seated a suitable distance away from the steering wheel, instrument panel and door finishers. See “Seat belts” earlier in this section for instructions and precautions on seat belt usage.

The supplemental air bags operate only when the ignition switch is in the ON or START position.

After turning the ignition switch to the ON position, the supplemental air bag warning light illuminates. The supplemental air bag warning light will turn off after about 7 seconds if the system is operational.

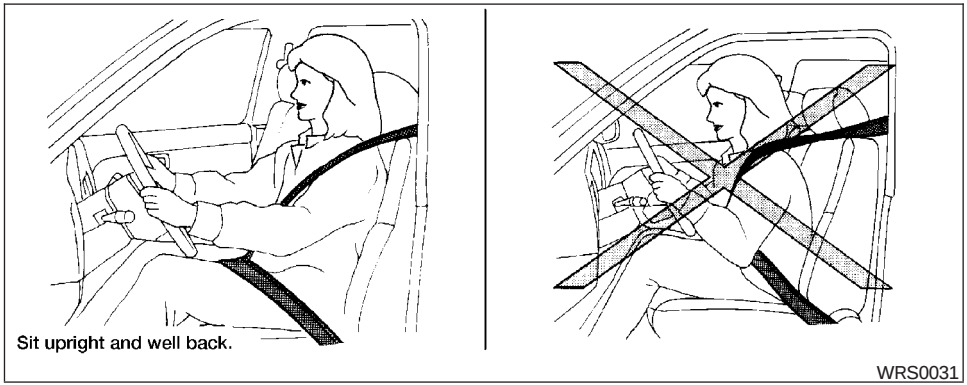

⚠ WARNING

- **The front air bags ordinarily will not inflate in the event of a side impact, rear impact, rollover, or lower severity frontal collision. Always wear your seat belts to help reduce the risk or severity of injury in various kinds of accidents.**
- **The front passenger air bag will not inflate if the passenger air bag status light is lit or if the front passenger seat is unoccupied. See "Front passenger air bag and status light" later in this section.**
- **The seat belts and the front air bags are most effective when you are sitting well back and upright in the seat. The front air bags inflate with great force. Even with the INFINITI Advanced Air Bag System, if you are unrestrained, leaning forward, sitting sideways or out of position in any way, you are at greater risk of injury or death in a crash. You may also receive serious or fatal injuries from the front air bag if you are up against it when it inflates. Always sit back against the seatback and as far away as practical from the steering wheel or instrument panel. Always use the seat belts.**
- **The driver and front passenger seat belt buckles are equipped with sensors that detect if the seat belts are fastened. The Advanced Air Bag System monitors the severity of a collision and seat belt usage then inflates the air bags. Failure to properly wear seat belts can increase the risk or severity of injury in an accident.**
- **The front passenger seat is equipped with an occupant classification sensor (pressure sensor) that turns the front passenger air bag OFF under some conditions. This sensor is only used in this seat. Failure to be properly seated and wearing the seat belt can increase the risk or severity of injury in an accident. See "Front Passenger air bag and status light" later in this section.**
- **Keep hands on the outside of the steering wheel. Placing them inside the steering wheel rim could increase the risk that they are injured when the front air bag inflates.**

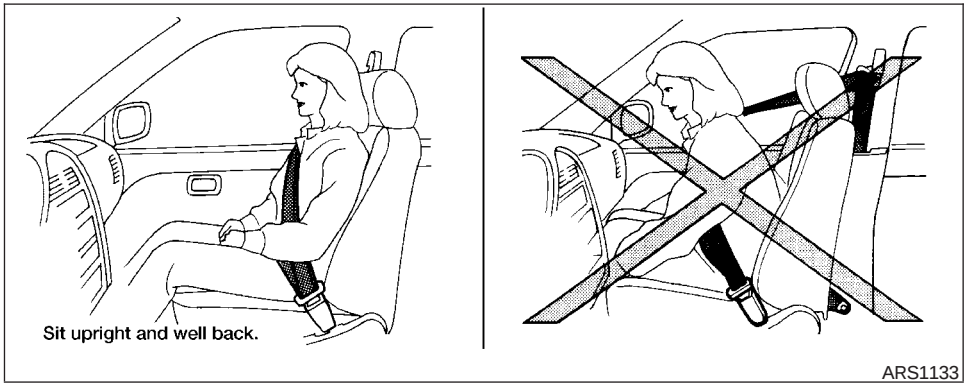

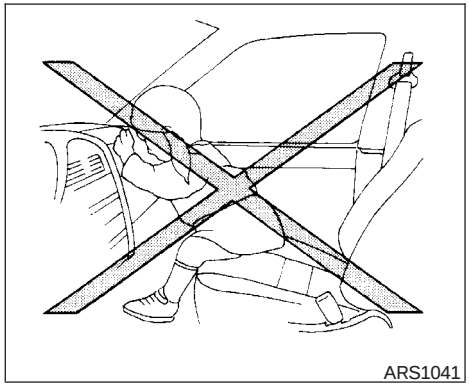

⚠ WARNING

- **Never let children ride unrestrained or extend their hands or face out of the window. Do not attempt to hold them in your lap or arms. Some examples of dangerous riding positions are shown in the illustrations.**

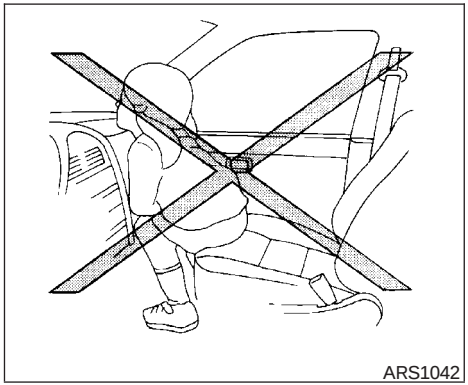
ARS1042

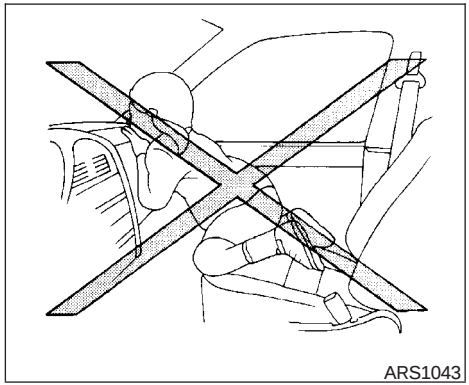
ARS1043

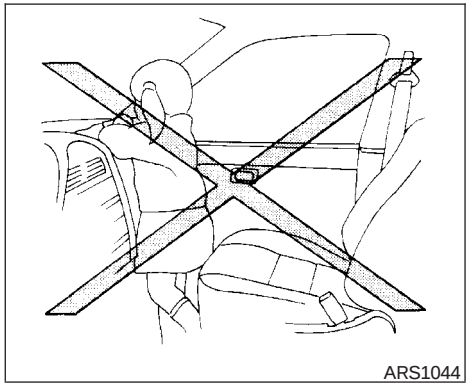
ARS1044

⚠ WARNING

- **Children may be severely injured or killed when the front air bags, side air bags or curtain and rollover air bags inflate if they are not properly restrained. Pre-teens and children should be properly restrained in the rear seat, if possible.**

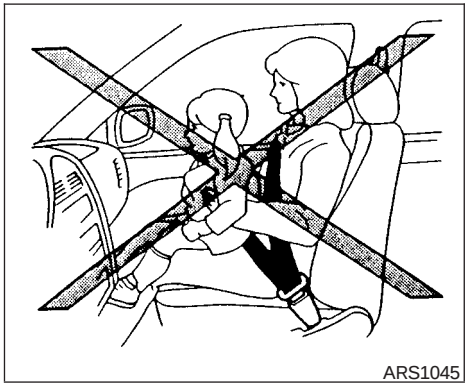
ARS1045

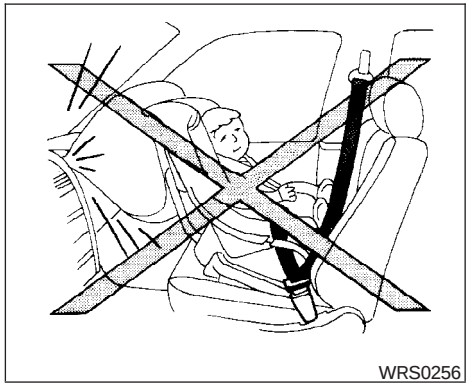
WRS0256

⚠ WARNING

- **Even with the INFINITI Advanced Air Bag System, never install a rear-facing child restraint in the front seat. An inflating front air bag could seriously injure or kill your child. See "Child restraints" earlier in this section for details.**

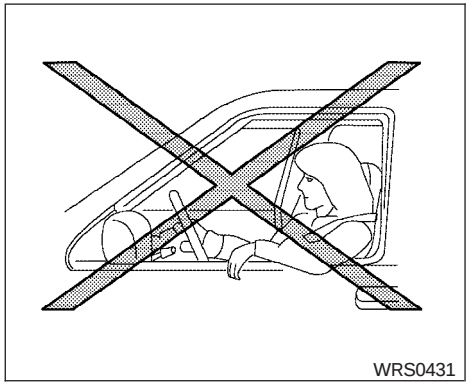
WRS0431

Do not lean against doors or windows.

⚠ WARNING

Front seat-mounted side-impact supplemental air bags and roof-mounted curtain side-impact and rollover supplemental air bags:

- **The side air bags and curtain and rollover air bags ordinarily will not inflate in the event of a frontal impact, rear impact, or lower severity side collision. Always wear your seat belts to help reduce the risk or severity of injury in various kinds of accidents.**

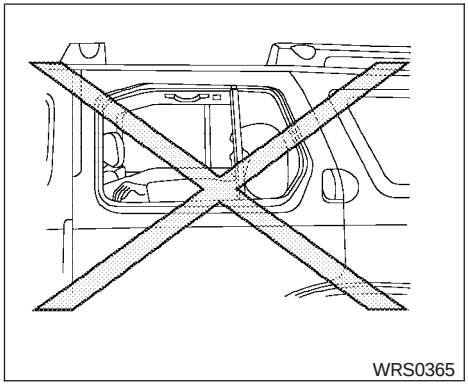

Do not lean against doors or windows.

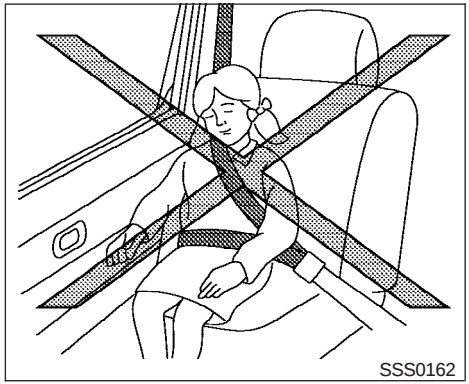

Do not lean against doors or windows.

⚠WARNING

- **The seat belts, the side air bags and curtain and rollover air bags are most effective when you are sitting well back and upright in the seat. The side air bag and curtain and rollover air bag inflate with great force. Do not allow anyone to place their hand, leg or face near the side air bag on the side of the seatback of the front seat or near the side roof rails. Do not allow anyone sitting in the front seats or rear outboard seats to extend their hand out of the window or lean against the door. Some examples of dangerous riding positions are shown in the previous illustrations.**

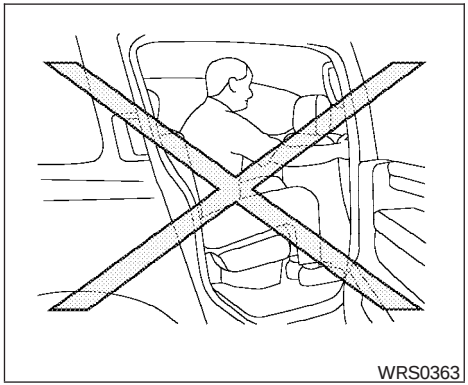

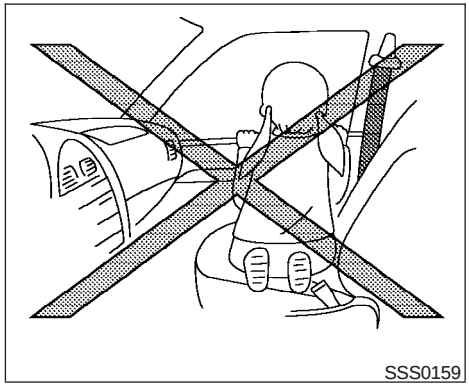

⚠ WARNING

- **When sitting in the 2nd row rear seat, do not hold onto the seatback of the front seat. If the side air bag inflates, you may be seriously injured. Be especially careful with children, who should always be properly restrained. Some examples of dangerous riding positions are shown in the illustrations.**
- **Do not use seat covers on the front seatbacks. They may interfere with side air bag inflation.**

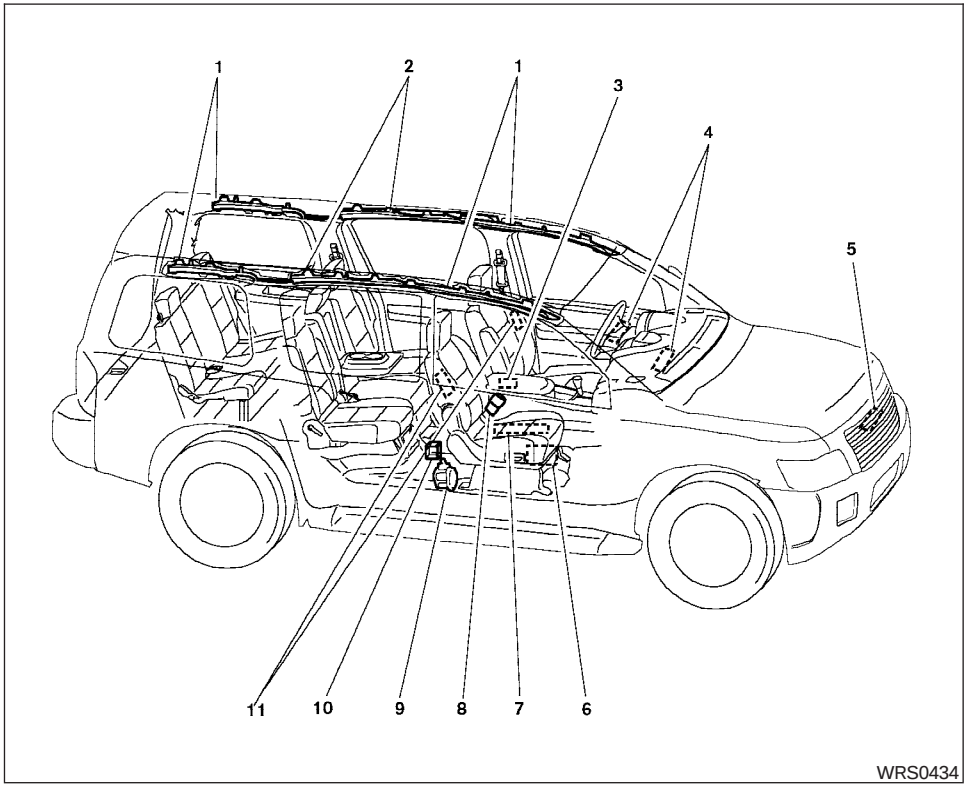

1. Roof-mounted curtain side-impact and rollover supplemental air bag inflators
2. Roof-mounted curtain side-impact and rollover supplemental air bags
3. Airbag Control Unit (ACU)
4. Supplemental front-impact air bag modules
5. Crash zone sensor
6. Occupant classification system control unit
7. Occupant classification sensor (pressure sensor)
8. Seat belt buckle switches
9. Seat belt with pretensioner
10. Satellite sensors
11. Front seat-mounted side-impact supplemental air bag modules

INFINITI Advanced Air Bag System (front seats)

This vehicle is equipped with the INFINITI Advanced Air Bag System for the driver and front passenger seats. This system is designed to meet certification requirements under U.S. regulations. It is also permitted in Canada. **However, all of the information, cautions and warnings in this manual still apply and must be followed.**

The driver supplemental front-impact air bag is located in the center of the steering wheel. The passenger supplemental front-impact air bag is mounted in the dashboard above the glove box. The front air bags are designed to inflate in higher severity frontal collisions, although they may inflate if the forces in another type of collision are similar to those of a higher severity frontal impact. They may not inflate in certain frontal collisions. Vehicle damage (or lack of it) is not always an indication of proper front air bag system operation.

The INFINITI Advanced Air Bag System has dual stage inflators. It also monitors information from the crash zone sensor, the Air bag Control Unit (ACU), seat belt buckle sensors, occupant classification sensor (pressure sensor) and passenger seat belt tension sensor. Inflator operation is based on the severity of a collision and seat belt usage for the driver. For the front passenger, it additionally monitors the weight of an occupant or object on the seat and seat belt tension. Based on information from the sensors, only one front air bag may inflate in a crash, depending on the crash severity and whether the front occupants are belted or unbelted. Additionally, the front passenger air bag may be automatically turned OFF under some conditions, depending on the weight detected on the passenger seat and how the seat belt is used. If the front passenger air bag is OFF, the passenger air bag status light will be illuminated (if the seat is unoccupied, the light will not be illuminated, but the air bag will be off). See "Front passenger air bag and status light" later in this section for further details. One front air bag inflating does not indicate improper performance of the system.

If you have any questions about your air bag system, please contact INFINITI or your INFINITI dealer. If you are considering modification of your vehicle due to a disability, you may also contact INFINITI. Contact information is contained in the front of this Owner's Manual.

When a front air bag inflates, a fairly loud noise may be heard, followed by the release of smoke. This smoke is not harmful and does not indicate a fire. Care should be taken to not inhale it, as it may cause irritation and choking. Those with a history of a breathing condition should get fresh air promptly.

Front air bags, along with the use of seat belts, help to cushion the impact force on the face and chest of the front occupants. They can help save lives and reduce serious injuries. However, an inflating front air bag may cause facial abrasions or other injuries. Front air bags do not provide restraint to the lower body.

Even with INFINITI Advanced Air Bags, seat belts should be correctly worn and the driver and passenger seated upright as far as practical away from the steering wheel or instrument panel. The front air bags inflate quickly in order to help protect the front occupants. Because of this, the force of the front air bag inflating can increase the risk of injury if the occupant is too close to, or is against, the front air bag module during inflation.

The front air bags deflate quickly after a collision.

The front air bags operate only when the ignition switch is in the ON or START position.

After turning the ignition key to the ON position, the supplemental air bag warning light illuminates. The supplemental air bag warning light will turn off after about 7 seconds if the system is operational.

Front passenger air bag and status light

⚠WARNING

The front passenger air bag is designed to automatically turn OFF under some conditions. Read this section carefully to learn how it operates. Proper use of the seat, seat belt and child restraints is necessary for most effective protection. Failure to follow all instructions in this manual concerning the use of seats, seat belts and child restraints can increase the risk or severity of injury in an accident.

Status light

The front passenger air bag status light is located under the climate controls. The light operates as follows:

- Unoccupied passenger's seat: The is OFF and the front passenger air bag is OFF and will not inflate in a crash.
- Passenger's seat occupied by a small adult, child or child restraint as outlined in this section: The illuminates to indicate that the front passenger air bag is OFF and will not inflate in a crash.
- Occupied passenger seat and the passenger meets the conditions outlined in this section: The light is OFF to indicate that the front passenger air bag is operational.

Front passenger air bag

The front passenger air bag is designed to automatically turn OFF when the vehicle is operated under some conditions as described below in accordance with U.S. regulations. If the front passenger air bag is OFF, it will not inflate in a crash. The driver air bag and other air bags in your vehicle are not part of this system.

The purpose of the regulation is to help reduce the risk of injury or death from an inflating air bag to certain front passenger seat occupants, such as children, by requiring the air bag to be automatically turned OFF. Certain sensors are used to meet the requirements.

One sensor used is the occupant classification sensor (pressure sensor). It is in the bottom of the front passenger seat cushion and is designed to detect an occupant and objects on the seat by weight. It works together with seat belt sensors described later. For example, if a child is in the front passenger seat, the Advanced Air Bag System is designed to turn the passenger air bag OFF in accordance with the regulations. Also, if a child restraint of the type specified in the regulations is on the seat, its weight and the child's weight can be detected and cause the air bag to turn OFF. Occupant classification sensor operation can vary depending on the front passenger seat belt sensors.

The front passenger seat belt sensors are designed to detect if the seat belt is buckled and the amount of tension on the seat belt, such as when it is in the Automatic Locking Retractor mode (child restraint mode). Based on the weight on the seat detected by the occupant classification sensor and the belt tension detected on the seat belt, the Advanced Air Bag System determines whether the front passenger air bag should be automatically turned OFF as required by the regulations.

Front passenger seat adult occupants who are properly seated and using the seat belt as outlined in this manual should not cause the passenger air bag to be automatically turned OFF. For small adults it may be turned OFF, however if the occupant takes his/her weight off the seat cushion (for example, by not sitting upright, by sitting on an edge of the seat, or by otherwise being out of position), this could cause the sensor to turn the air bag OFF. In addition, if the occupant improperly uses the seat belt in the ALR mode (child restraint mode), this could cause the air bag to be turned OFF. Always be sure to be seated and wearing the seat belt properly for the most effective protection by the seat belt and supplemental air bag.

INFINITI recommends that pre-teens and children be properly restrained in a rear seat. INFINITI also recommends that appropriate child restraints and booster seats be properly installed in a rear seat. If this is not possible, the occupant classification sensor and seat belt sensors are designed to operate as described above to turn the front passenger air bag OFF for specified child restraints as required by the regulations. Failing to properly secure child restraints and to use the ALR mode (child restraint mode) may allow the restraint to tip or move in an accident or sudden stop. This can also result in the passenger air bag inflating in a crash instead of being OFF. See “Child restraints” earlier in this section for proper use and installation.

If the front passenger seat is not occupied the passenger air bag is designed not to inflate in a crash. However, heavy objects placed on the seat could result in air bag inflation, because of the object’s weight detected by the occupant classification sensor. Other conditions could also result in air bag inflation, such as if a child is standing on the seat, or if two children are on the seat, contrary to the instructions in this manual. Always be sure that you and all vehicle occupants are seated and restrained properly.

Using the passenger air bag status light, you can monitor when the front passenger air bag is automatically turned OFF with the seat occupied. The light will not illuminate when the front passenger seat is unoccupied.

If an adult occupant is in the seat but the passenger air bag status light is illuminated (indicating that the air bag is OFF), it could be that the person is a small adult, or is not sitting on the seat properly or not using the seat belt properly.

If a child restraint must be used in the front seat, the passenger air bag status light may or may not be illuminated, depending on the size of the child and the type of child restraint being used. If the air bag status light is not illuminated (indicating that the air bag might inflate in a crash), it could be that the child restraint or seat belt is not being used properly. Make sure that the child restraint is installed properly, the seat belt is used properly and the occupant is positioned properly. If the air bag status light is not illuminated, reposition the occupant or child restraint in a rear seat.

If the passenger air bag status light will not illuminate even though you believe that the child restraint, the seat belts and the occupant are properly positioned, the system may be sensing an unoccupied seat (in which case the air bag is OFF). Your INFINITI dealer can check that the system is OFF by using a special tool. However, until you have confirmed with your dealer that your air bag is working properly, reposition the occupant or child restraint in a rear seat.

The air bag system and passenger air bag status light will take a few seconds to register a change in the passenger seat status. For example, if a large adult who is sitting in the front passenger seat exits the vehicle, the passenger air bag status light will go from OFF to ON for a few seconds and then to OFF. This is normal system operation and does not indicate a malfunction.

If a malfunction occurs in the front passenger air bag system, the supplemental air bag warning light , located in the meter and gauges area on the driver’s side of the instrument panel, will blink. Have the system checked by an INFINITI dealer.

Other supplemental front-impact air bag precautions

⚠WARNING

- **Do not place any objects on the steering wheel pad or on the instrument panel. Also, do not place any objects between any occupant and the steering wheel or instrument panel. Such objects may become dangerous projectiles and cause injury if the front air bags inflate.**
- **Immediately after inflation, several front air bag system components will be hot. Do not touch them; you may severely burn yourself.**
- **No unauthorized changes should be made to any components or wiring of the supplemental air bag system. This is to prevent accidental inflation of the supplemental air bag or damage to the supplemental air bag system.**
- **Do not make unauthorized changes to your vehicle's electrical system, suspension system or front end structure. This could affect proper operation of the front air bag system.**
- **Tampering with the front air bag system may result in serious personal injury. Tampering includes changes to the steering wheel and the instrument panel assembly by placing material over the steering wheel pad and above the instrument panel or by installing additional trim material around the air bag system.**
- **Modifying or tampering with the front passenger seat may result in serious personal injury. For example, do not change the front seats by placing material on the seat cushion or by installing additional trim material, such as seat covers, on the seat that are not specifically designed to assure proper air bag operation. Additionally, do not stow any objects under the front passenger seat or the seat cushion and seatback. Such objects may interfere with the proper operation of the occupant classification sensor (pressure sensor).**
- **No unauthorized changes should be made to any components or wiring of the seat belt system. This may affect the front air bag system. Tampering with the seat belt system may result in serious personal injury.**
- **Work around and on the side air bag and curtain air bag systems should be done by an INFINITI dealer. Installation of electrical equipment should also be done by an INFINITI dealer. The SRS wiring harnesses* should not be modified or disconnected. Unauthorized electrical test equipment and probing devices should not be used on the side air bag or curtain and rollover air bag systems.**
- **A cracked windshield should be replaced immediately by a qualified repair facility. A cracked windshield could affect the function of the supplemental air bag system.**
- **The SRS wiring harness connectors are yellow and orange for easy identification.**

When selling your vehicle, we request that you inform the buyer about the front air bag system and guide the buyer to the appropriate sections in this Owner's Manual.

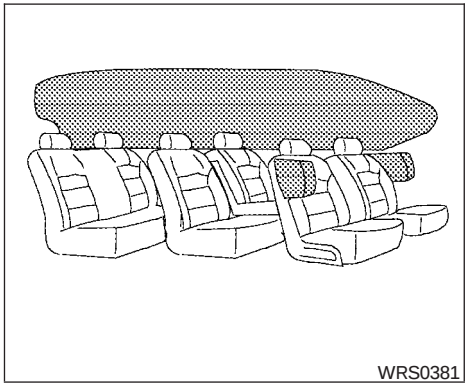

Front seat-mounted side-impact supplemental air bag and roof-mounted curtain side-impact and rollover supplemental air bag systems

The side air bags are located in the outside of the seatback of the front seats. The curtain and rollover air bags are located in the side roof rails in all 3 rows. These systems are designed to meet voluntary guidelines to help reduce the risk of injury to out-of-position occupants. **However, all of the information, cautions and warnings in this manual still apply and must be followed.** The side air bags and curtain and rollover air bags are designed to inflate in higher severity side collisions, although they may inflate if the forces in another type of collision are similar to those of a higher severity side impact. They are designed to inflate on the side where the vehicle is impacted. They may not inflate in certain side collisions.

Curtain and rollover air bags are also designed to inflate in certain types of rollover collisions or near rollovers. As a result, certain vehicle movements (for example, during severe off roading) may cause the curtain and rollover air bags to inflate.

Vehicle damage (or lack of it) is not always an indication of proper side air bag and curtain and rollover air bag operation.

When the side air bags and curtain and rollover air bags inflate, a fairly loud noise may be heard, followed by release of smoke. This smoke is not harmful and does not indicate a fire. Care should be taken not to inhale it, as it may cause irritation and choking. Those with a history of a breathing condition should get fresh air promptly.

Side air bags, along with the use of seat belts, help to cushion the impact force on the chest of the front occupants. Curtain and rollover air bags help to cushion the impact force to the head of occupants in the front and rear outboard seating positions in all rows. They can help save lives and reduce serious injuries. However, an inflating side air bag or curtain and rollover air bag may cause abrasions or other injuries. Side air bags and curtain and rollover air bags do not provide restraint to the lower body.

The seat belts should be correctly worn and the driver and passenger seated upright as far as practical away from the side air bag. Rear seat passengers should be seated as far away as practical from the door finishers and side roof rails. The side air bags and curtain and rollover air bags inflate quickly in order to help protect the occupants. Because of this, the force of the side air bags and curtain and rollover air bags inflating can increase the risk of injury if the occupant is too close to, or is against, these air bag modules during inflation. The side air bag will deflate quickly after the collision is over.

The curtain and rollover air bag will remain inflated for a short time.

The side air bags and curtain and rollover air bags operate only when the ignition switch is in the ON or START position.

After turning the ignition key to the ON position, the supplemental air bag warning light illuminates. The supplemental air bag warning light will turn off after about 7 seconds if the system is operational.

⚠ WARNING

- **Do not place any objects near the seatback of the front seats. Also, do not place any objects (an umbrella, bag, etc.) between the front door finisher and the front seat. Such objects may become dangerous projectiles and cause injury if a side air bag inflates.**
- **Right after inflation, several side air bag and curtain and rollover air bag system components will be hot. Do not touch them; you may severely burn yourself.**
- **No unauthorized changes should be made to any components or wiring of the side air bag and curtain and rollover air bag systems. This is to prevent damage to or accidental inflation of the side air bag and curtain and rollover air bag systems.**
- **Do not make unauthorized changes to your vehicle's electrical system, suspension system or side panel. This could affect proper operation of the curtain and rollover air bag systems.**
- **Tampering with the side air bag system may result in serious personal injury. For example, do not change the front seats by placing material near the seatbacks or by installing additional trim material, such as seat covers, around the side air bag.**
- **Work around and on the side air bag and curtain and rollover air bag systems should be done by an INFINITI dealer. Installation of electrical equipment should also be done by an INFINITI dealer. The SRS wiring harnesses* should not be modified or disconnected. Unauthorized electrical test equipment and probing devices should not be used on the side air bag or curtain and rollover air bag systems.**

*** The SRS wiring harness or connectors are yellow or orange for easy identification.**

When selling your vehicle, we request that you inform the buyer about the side air bags and curtain and rollover air bag system and guide the buyer to the appropriate sections in this Owner's Manual.

Seat belts with pretensioners (Front seats)

⚠ WARNING

- **The pretensioners cannot be reused after activation. They must be replaced together with the retractor and buckle as a unit.**
- **If the vehicle becomes involved in a frontal collision but a pretensioner is not activated, be sure to have the pretensioner system checked and, if necessary, replaced by you INFINITI dealer.**
- **No unauthorized changes should be made to any components or wiring of the pretensioner system. This is to prevent damage to or accidental activation of the pretensioners. Tampering with the pretensioner system may result in serious personal injury.**
- **Work around and on the pretensioner system should be done by an INFINITI dealer. Installation of electrical equipment should also be done by an INFINITI dealer. Unauthorized electrical test equipment and probing devices should not be used on the pretensioner system.**

- **If you need to dispose of a pretensioner or scrap the vehicle, contact an INFINITI dealer. Correct pretensioner disposal procedures are set forth in the appropriate INFINITI Service manual. Incorrect disposal procedures could cause personal injury.**

The pretensioner system activates in conjunction with the front air bag system. The pretensioner system also activates with the curtain and rollover air bags in certain types of rollover collisions or near rollovers. Working with the seat belt retractor, it helps tighten the seat belt when the vehicle becomes involved in certain types of collisions, helping to restrain front seat occupants.

The pretensioner is encased with the seat belt retractor. These seat belts are used the same way as conventional seat belts.

When a pretensioner activates, smoke is released and a loud noise may be heard. This smoke is not harmful and does not indicate a fire. Care should be taken not to inhale it, as it may cause irritation and choking. Those with a history of a breathing condition should get fresh air promptly.

After pretensioner activation, load limiters allow the seat belt to release webbing (if necessary) to reduce forces against the chest.

If any abnormality occurs in the pretensioner system, the supplemental air bag warning light will not come on, will flash intermittently or will turn on for 7 seconds and remain on after the ignition switch has been turned to the ON or START position. In this case, the pretensioner system may not function properly. They must be checked and repaired. Take your vehicle to the nearest INFINITI dealer.

When selling your vehicle, we request that you inform the buyer about the pretensioner system and guide the buyer to the appropriate sections in this Owner's Manual.

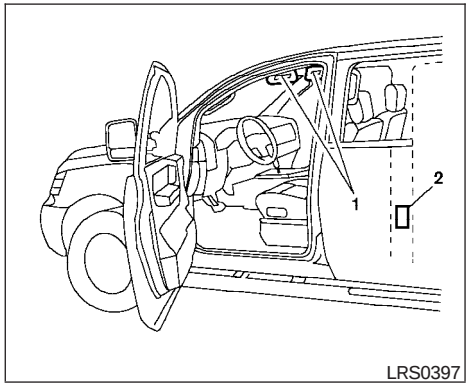

1. SRS Air bag warning labels

   The warning labels are located on the surface of the sun visor.

2. SRS Side air bag warning label

   The warning label is located on the side of the passenger's side center pillar.

SUPPLEMENTAL AIR BAG WARNING LABELS

Warning labels about the supplemental front-impact air bag, front seat-mounted side-impact supplemental air bag and roof-mounted curtain side-impact and rollover supplemental air bag systems are placed in the vehicle as shown in the illustration.

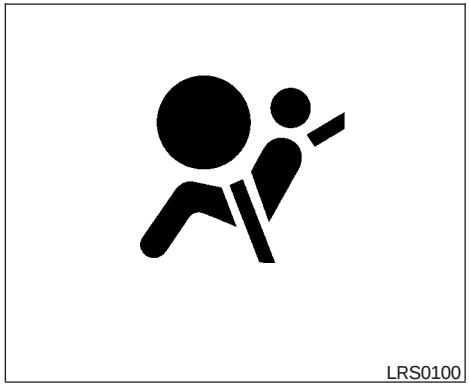

SUPPLEMENTAL AIR BAG WARNING LIGHT

The supplemental air bag warning light, displaying in the instrument panel, monitors the circuits of the supplemental front-impact air bag, front seat-mounted side-impact supplemental air bag, roof-mounted curtain side-impact and rollover supplemental air bag and seat belt pretensioner systems. The monitored circuits include the Air bag Control Unit (ACU), crash zone sensor, satellite sensors, rollover sensor, front air bag modules, side air bag modules, curtain and rollover air bag modules, pretensioners and all related wiring.

When the ignition switch is in the ON or START position, the supplemental air bag warning light illuminates for about 7 seconds and then turns off. This means the system is operational.

If any of the following conditions occur, the front air bag, side air bag, curtain and rollover air bag and pretensioner systems need servicing:

- The supplemental air bag warning light remains on after approximately 7 seconds.
- The supplemental air bag warning light flashes intermittently.
- The supplemental air bag warning light does not come on at all.

Under these conditions, the front air bag, side air bag, curtain and rollover air bag or pretensioner systems may not operate properly. They must be checked and repaired. Take your vehicle to the nearest INFINITI dealer.

⚠ WARNING

If the supplemental air bag warning light is on, it could mean that the front air bag, side air bag, curtain and rollover air bag and/or pretensioner systems will not operate in an accident. To help avoid injury to yourself or others, have your vehicle checked by an INFINITI dealer as soon as possible.

Repair and replacement procedure

The front air bags, side air bags, curtain and rollover air bags and pretensioners are designed to inflate on a one-time-only basis. As a reminder, unless it is damaged, the supplemental air bag warning light remains illuminated after inflation has occurred. Repair and replacement of these supplemental air bag systems should be done only by an INFINITI dealer.

When maintenance work is required on the vehicle, the front air bags, side air bags, curtain and rollover air bags, pretensioners and related parts should be pointed out to the person performing the maintenance. The ignition switch should always be in the LOCK position when working under the hood or inside the vehicle.

⚠ WARNING

- **Once a front air bag, side air bag or curtain and rollover air bags have inflated, the air bag module will not function again and must be replaced. Additionally, if any of the front air bags inflate, the activated pretensioners must also be replaced. The air bag module and pretensioner should be replaced by an INFINITI dealer. The air bag module and pretensioner cannot be repaired.**
- **The front air bag, side air bag and curtain and rollover air bag systems and the pretensioner system should be inspected by an INFINITI dealer if there is any damage to the front end or side portion of the vehicle.**
- **If you need to dispose of a supplemental air bag or pretensioner or scrap the vehicle, contact an INFINITI dealer. Correct supplemental air bag and pretensioner system disposal procedures are set forth in the appropriate INFINITI Service Manual. Incorrect disposal procedures could cause personal injury.**

MEMO

2 Instruments and controls

Instrument panel 2-2
Meters and gauges 2-3
Speedometer and odometer 2-4
Tachometer 2-5
Engine coolant temperature gauge 2-5
Fuel gauge 2-6
Engine oil pressure gauge 2-6
Voltmeter 2-7
Compass display (if so equipped) 2-7
Zone variation change procedure 2-9
Warning/indicator lights and audible reminders 2-10
Checking bulbs 2-10
Warning lights 2-11
Indicator lights 2-15
Audible reminders 2-17
Vehicle Information Display 2-17
Vehicle information display warnings and indicators 2-18
Security systems 2-21
Vehicle security system 2-21
INFINITI vehicle immobilizer system 2-22
Windshield wiper and washer switch 2-23
Switch operation 2-23
Rear window wiper and washer switch 2-24
Rear window and outside mirror defroster switch 2-25
Headlight and turn signal switch 2-25
Xenon headlights 2-25
Headlight control switch 2-26
Daytime running light system (Canada only) 2-28
Instrument brightness control 2-29
Turn signal switch 2-29
Fog light switch 2-30
Hazard warning flasher switch 2-30
Horn 2-31
Heated seats 2-31
Heated steering wheel 2-32
Vehicle Dynamic Control (VDC) off switch 2-32
Rear sonar system off switch 2-33
Front sonar system off switch (If so equipped) 2-33
Tow mode switch (if so equipped) 2-34
Clock 2-35
Adjusting the time 2-35
Power outlet 2-35
Cigarette lighter 2-36
Storage 2-37
Console box 2-37

Glove box 2-38
Sunglasses holder 2-38
Map pockets 2-39
Seatback pocket 2-39
Overhead console 2-40
Cup holders 2-41
2nd row center console (if so equipped) 2-43
Cargo area storage bin 2-44
Luggage hooks 2-45
Cargo net 2-46
Roof rack 2-47
Windows 2-48
Power windows 2-48
Power vent windows 2-51
Moonroof 2-51
Automatic moonroof 2-51
Interior light 2-53
Console light 2-54
Personal lights 2-54
Map lights 2-55
Cargo light 2-55
HomeLink® universal transceiver 2-55
Programming HomeLink® 2-56
Programming HomeLink® for Canadian customers 2-57
Operating the HomeLink® universal transceiver 2-57
Programming trouble-diagnosis 2-58
Clearing the programmed information 2-58
Reprogramming a single HomeLink® button 2-58
If your vehicle is stolen 2-58

INSTRUMENT PANEL

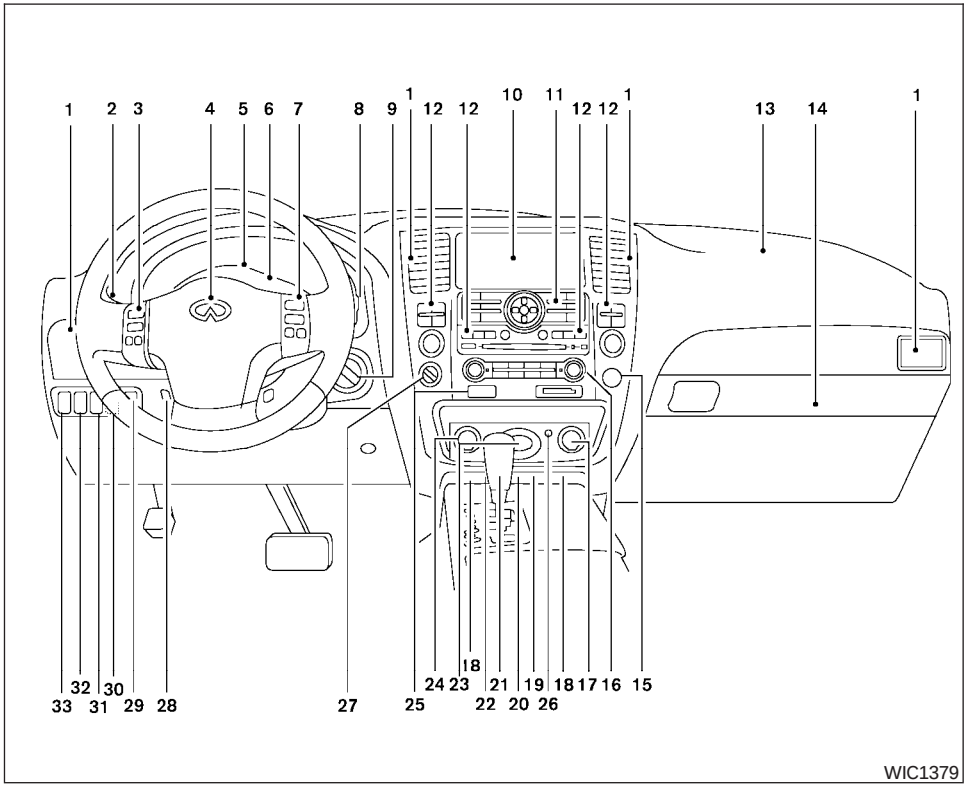

1. Vents (P. 4-21)
2. Headlight/fog light/turn signal switch (P. 2-25)
3. Steering wheel switch for audio control and Bluetooth® Hands-Free Phone System (if so equipped) (P. 4-50, 4-69)
4. Driver supplemental air bag/horn (P. 1-48, P. 2-31)
5. Meters, gauges and warning/indicator lights (P. 2-3, 2-10)
6. Instrument brightness control (P. 2-29)
7. Cruise control main/set switches and Intelligent cruise control main/set switches (if so equipped) (P. 5-17, P.5-19)
8. Windshield wiper/washer switch and rear window wiper/washer switch (P. 2-23, P. 2-24)
9. Ignition switch (P. 5-9)
10. Navigation system* (P. 4-2)
11. Navigation system* controls (P. 4-2)
12. Audio system controls (P. 4-25)
13. Front passenger supplemental air bag (P. 1-48)
14. Glove box (P. 2-38)
15. Hazard lights (P. 2-30)
16. Climate controls (P. 4-22)

17. Power outlet (P. 2-35)
18. Heated seat switch (P. 2-31)
19. Tow mode switch (P. 2-34)
20. Vehicle dynamic control (VDC) off switch (P. 2-32)
21. Shift selector lever (P. 5-12)
22. Heated steering wheel (P.2-32)
23. Clock (P. 2-35)
24. Power outlet (P. 2-35)
25. Front passenger air bag status light (P. 1-57)
26. Auxiliary jack (P. 4-38
27. 4WD shift switch (if so equipped) (P. 5-41)
28. Tilt steering wheel control (P. 3-22)
29.. Rear or front and rear sonar system off switch (P. 2-33)
30. Pedal position adjustment switch (P. 3-23)
31. Headlight aiming control (P. 2-28)
32. Power vent windows (P. 2-51)
33. Lift gate open/close switch (P. 3-16)

*: Refer to the separate Navigation System Owner's Manual.

See the page number indicated in parentheses for operating details.

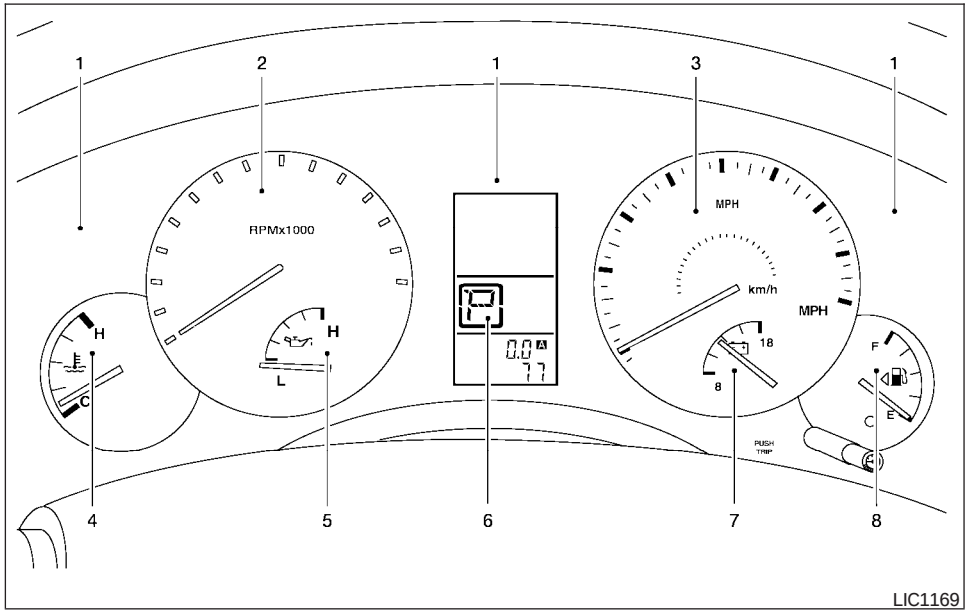

1. Warning/indicator lights
2. Tachometer
3. Speedometer
4. Engine coolant temperature gauge
5. Engine oil pressure gauge
6. Odometer/Twin trip odometer, A/T position indicator, 4WD shift indicator light (if so equipped)/vehicle information display
7. Voltmeter
8. Fuel gauge

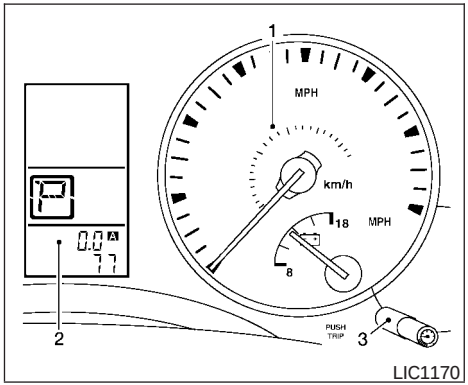

1. Speedometer
2. Odometer/twin trip display
3. Change button

SPEEDOMETER AND ODOMETER

Speedometer

The speedometer indicates vehicle speed.

Odometer/Twin trip odometer

The odometer/twin trip odometer is displayed when the ignition switch is in the ON position.

The odometer records the total distance the vehicle has been driven.

The twin trip odometer records the distance of individual trips.

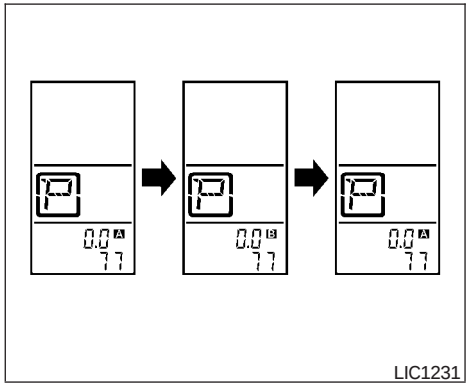

Changing the display:

Pushing the change button changes the display as follows:

Trip **A** → Trip **B** → Trip **A**

Resetting the trip odometer:

Pushing the change button for more than 1 second resets the trip odometer to zero.

Elapsed time, driving distance and average speed information is also available. Refer to “Control panel buttons” in the “Monitor, climate, audio, phone and voice recognition systems” section later in this manual.

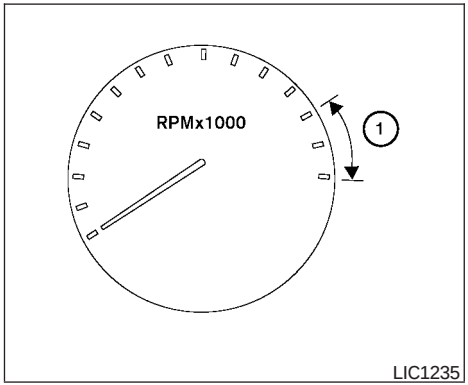

LIC1235

TACHOMETER

The tachometer indicates engine speed in revolutions per minute (rpm). Do not rev the engine into the red zone ①.

⚠ CAUTION

When engine speed approaches the red zone, shift to a higher gear or reduce engine speed. Operating the engine in the red zone may cause serious engine damage.

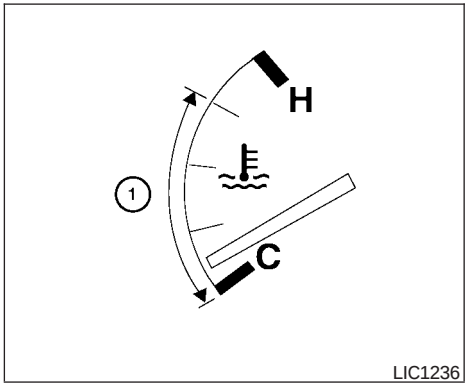

LIC1236

ENGINE COOLANT TEMPERATURE GAUGE

The gauge indicates the engine coolant temperature. The engine coolant temperature is within the normal range ① when the gauge needle points within the zone shown in the illustration.

The engine coolant temperature varies with the outside air temperature and driving conditions.

⚠ CAUTION

If the gauge indicates coolant temperature near the hot (H) end of the normal range, reduce vehicle speed to decrease temperature. If the gauge is over the normal range, stop the vehicle as soon as safely possible. If the engine is overheated, continued operation of the vehicle may seriously damage the engine. See "If your vehicle overheats" in the "In case of emergency" section for immediate action required.

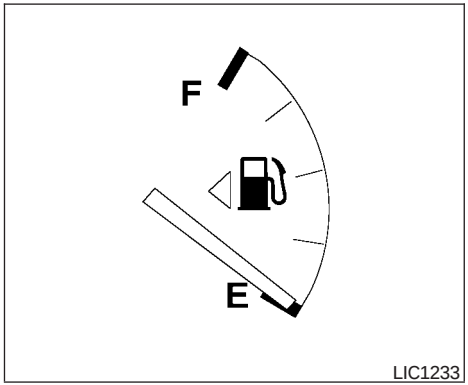

FUEL GAUGE

The gauge indicates the **approximate** fuel level in the tank.

The gauge may move slightly during braking, turning, acceleration, or going up or down hills.

The gauge needle returns to E (Empty) after the ignition key is turned to OFF.

The low fuel warning light comes on when the amount of fuel in the tank is getting low.

Refill the fuel tank before the gauge registers E (Empty).

The ◀⛽ indicates that the fuel-filler door is located on the driver's side of the vehicle.

⚠CAUTION

- **If the vehicle runs out of fuel, the SERVICE ENGINE SOON malfunction indicator light (MIL) may come on. Refuel as soon as possible. After a few driving trips, the SERVICE ENGINE SOON light should turn off. If the light remains on after a few driving trips, have the vehicle inspected by an INFINITI dealer.**
- **For additional information, see "Malfunction Indicator Light (MIL)" later in this section.**

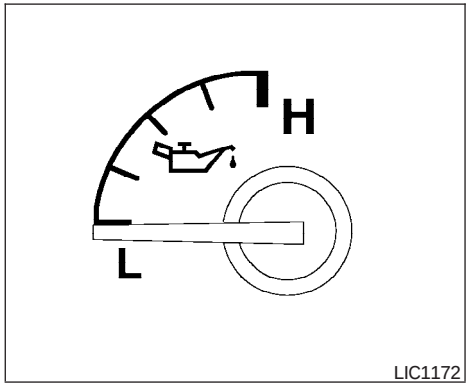

ENGINE OIL PRESSURE GAUGE

The gauge indicates the engine lubrication system oil pressure while the engine is running. The needle should be in the middle of the gauge when the engine is running.

⚠ CAUTION

- **This gauge is not designed to indicate low engine oil level. Use the dipstick to check the oil level. (See “Engine oil” in the “Maintenance and do-it-yourself” section.)**
- **If the gauge reading does not move with the proper amount of engine oil, have the vehicle checked by an INFINITI dealer. Continued vehicle operation in such a condition could cause serious damage to the engine.**

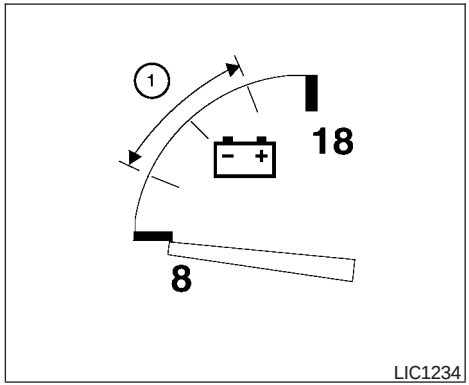

VOLTMETER

When the ignition switch is turned to the ON position, the voltmeter indicates the battery voltage. When the engine is running, it indicates the generator voltage.

While cranking the engine, the volts drop below the normal range. If the reading is not in the normal range (11 – 15 volts) ① while the engine is running, it may indicate that the charging system is not functioning properly. Have the system checked by an INFINITI dealer.

This unit measures terrestrial magnetism and indicates the direction of the vehicle’s heading.

With the ignition switch in the ON position, press the -N- button as described in the chart below to activate various features of the automatic anti-glare rearview mirror.

Push and hold the -N- button for about:	Feature: (Push button again for about 1 second to change settings)
1 second	Compass display toggles on/off
5 seconds	Compass zone can be changed to correct false compass readings
9 seconds	Compass enters calibration mode

For information about the automatic anti-glare feature, refer to “Automatic anti-glare rearview mirror” in the “Pre-driving checks and adjustments” section.

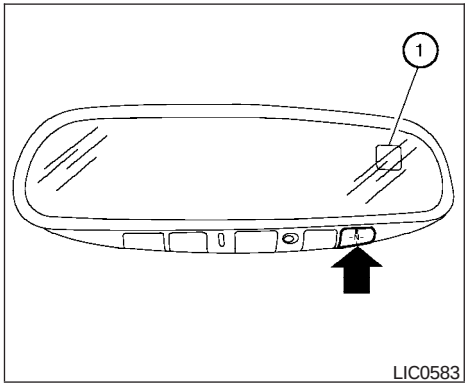

Push the button for about 1 second when the ignition switch is in the ON position to toggle the compass display ① on or off. The display will indicate the direction of the vehicle's heading.

N: North
E: East
S: South
W: West

If the display reads "C", calibrate the compass by driving the vehicle in three complete circles at less than 5 MPH (8 km/h).

You can also calibrate the compass by driving your vehicle on your everyday route. The compass will be calibrated once it has tracked three complete circles.

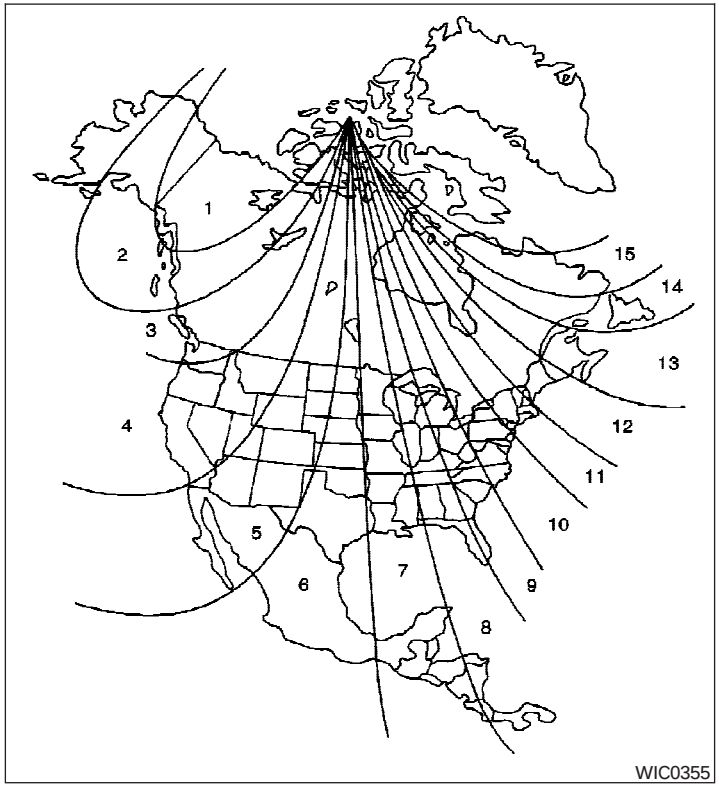

ZONE VARIATION CHANGE PROCEDURE

The difference between magnetic north and geographical north is known as variance. In some areas, this difference can sometimes be great enough to cause false compass readings. Follow these instructions to set the variance for your particular location if this happens:

1. Press and hold the button for about 5 seconds. The current zone number will appear in the display. Release the button.
2. Find your current location on the zone map. Refer to the illustration.
3. Press the button repeatedly to toggle through the zone numbers until the desired number appears in the display. Once you have selected a zone number, the display will show a compass direction within a few seconds.

Inaccurate compass direction

The compass display is equipped with automatic correction function. If the correct direction is not shown, follow this procedure.

1. With the display turned on, press and hold the button for about 10 seconds. The "CAL" icon in the compass display will illuminate.
2. Calibrate the compass by driving the vehicle one and a half circles at a maximum speed of 6 MPH (10 km/h).
3. After completing the circles, the display should return to normal.

- If the compass deviates from the correct indication soon after repeated adjustment, have the compass checked at an authorized INFINITI dealer.
- The compass may not indicate the correct compass point in tunnels or while driving up or down a steep hill. (The compass returns to the correct compass point when the vehicle moves to an area where the geomagnetism is stabilized.)
- If a magnet is located in or near the overhead console in the front of the vehicle or the vehicle is driven where the terrestrial magnetism is disturbed, the compass display may not indicate the correct direction.

⚠ CAUTION

- **Do not install a ski rack, antenna, etc., which are attached to the vehicle by means of a magnet. They affect the operation of the compass.**
- **When cleaning the mirror, use a paper towel or similar material dampened with glass cleaner. Do not spray glass cleaner directly on the mirror as it may cause the liquid cleaner to enter the mirror housing.**

WARNING/INDICATOR LIGHTS AND AUDIBLE REMINDERS

ABS	or (ABS)	Anti-lock Braking System (ABS) warning light		Low fuel warning light	SERVICE ENGINE SOON	Malfunction indicator light (MIL)
AT CHECK	Automatic transmission check warning light			Low tire pressure warning light		Security indicator light
ATP	Automatic transmission park warning light (4x4 model)			Master warning light	SLIP	Slip indicator light
BRAKE	or	Brake warning light		Seat belt warning light and chime		Turn signal/hazard indicator lights
		Charge warning light		Supplemental air bag warning light	VDC OFF	Vehicle dynamic control off indicator light
CK SUSP	Check suspension warning light			Front passenger air bag status light		
		Engine oil pressure low/engine coolant temperature high warning light		High beam indicator light (Blue)		
4WD	4WD warning light (4x4 model)		SERVICE ENGINE SOON	Malfunction indicator light (MIL)		

CHECKING BULBS

With all doors closed, apply the parking brake and turn the ignition key to the ON position without starting the engine. The following lights will come on:

, BRAKE or , , SERVICE ENGINE SOON , , 4WD

The following lights come on briefly and then go off:

ABS (AT CHECK) or (ABS) (CK SUSP) , , SLIP , , VDC OFF ,

If any light fails to come on, it may indicate a burned-out bulb or an open circuit in the electrical system. Have the system repaired promptly.

WARNING LIGHTS

For additional information on warnings and indicators, see “Vehicle information display” later in this section.

ABS or (ABS) Anti-lock Braking System (ABS) warning light

When the ignition switch is in the ON position, the Anti-lock Braking System (ABS) warning light illuminates and then turns off. This indicates the ABS is operational.

If the ABS warning light illuminates while the engine is running, or while driving, it may indicate the ABS is not functioning properly. Have the system checked by an INFINITI dealer.

If an ABS malfunction occurs, the anti-lock function is turned off. The brake system then operates normally, but without anti-lock assistance. See ″Brake system″ in the ″Starting and driving″ section.

AT CHECK Automatic transmission check warning light

When the ignition switch is turned ON, the light comes on for about 2 seconds. If the light comes on at any other time, it may indicate the automatic transmission system is not functioning properly. Have the system checked by an INFINITI dealer.

ATP Automatic transmission park warning light (4x4 model)

WARNING

- **If the ATP light is ON, this indicates that the automatic transmission P (Park) position will not function and the transfer case is in neutral.**
- **When parking, always make sure that the 4WD shift indicator light illuminates and the parking brake is set. Failure to engage the transfer position in 2WD, AUTO, 4H or 4LO could result in the vehicle moving unexpectedly, resulting in serious personal injury or property damage.**
- **The warning light may come on when the ignition switch is ON and the automatic transmission lever is shifted to the P position while shifting the transfer case between 4H and 4LO. Shift the 4WD shift switch to the 2WD, AUTO, 4H, or 4LO position again to turn off the ATP warning light when the warning light comes on. (Before shifting the 4WD switch into the 4LO position or out of 4LO in the 4H position, move the automatic transmission selector lever into the N position. Shift the selector lever into the P position and make sure that the 4WD shift indicator light is ON and the ATP warning light is OFF.)**

This light indicates that the automatic transmission parking function is not engaged. If the transfer control is not secured in any drive position while the automatic transmission selector lever is in the P (Park) position, the transmission will disengage and the drive wheels will not lock.

BRAKE or (!) Brake warning light

This light functions for both the parking brake and the foot brake systems.

Parking brake indicator

When the ignition key is in the ON position, the light comes on when the parking brake is applied.

Low brake fluid warning light

When the ignition switch is in the ON position, the light warns of a low brake fluid level. If the light comes on while the engine is running with the parking brake not applied, stop the vehicle and perform the following:

1. Check the brake fluid level. Add brake fluid as necessary. See "Brake fluid" in the "Maintenance and do-it-yourself" section of this manual.
2. If the brake fluid level is correct, have the warning system checked by an INFINITI dealer.

⚠WARNING

- **Your brake system may not be working properly if the warning light is on. Driving could be dangerous. If you judge it to be safe, drive carefully to the nearest service station for repairs. Otherwise, have your vehicle towed because driving it could be dangerous.**
- **Pressing the brake pedal with the engine stopped and/or a low brake fluid level may increase your stopping distance and braking will require greater pedal effort as well as pedal travel.**
- **If the brake fluid level is below the MINIMUM or MIN mark on the brake fluid reservoir, do not drive until the brake system has been checked at an INFINITI dealer.**

Charge warning light

If this light comes on while the engine is running, it may indicate the charging system is not functioning properly. Turn the engine off and check the generator belt. If the belt is loose, broken, missing, or if the light remains on, see an INFINITI dealer immediately.

⚠CAUTION

- **Do not ground electrical accessories directly to the battery terminal. Doing so will bypass the variable control system and the vehicle battery may not charge completely. Refer to "Variable voltage control system" in the "Maintenance and do-it-yourself" section later in this manual.**
- **Do not continue driving if the generator belt is loose, broken or missing.**

Check suspension warning light

This light may indicate a malfunction in the auto-leveling suspension.

For additional information, refer to "Jacking up vehicle and removing the damaged tire" in the "In case of emergency" section of this manual.

Engine oil pressure low/Engine coolant temperature high warning light

This light warns of low engine oil pressure or high engine coolant temperature.

If the light flickers or comes on during normal driving, pull off the road in a safe area, stop the engine and allow it to cool. If the light remains on after checking the oil and coolant, stop the engine **immediately** and call an INFINITI dealer or other authorized repair shop.

This light is not designed to indicate a low oil or low coolant level. Check the oil level with the dipstick and check the coolant level on the reservoir. See "Engine oil" and "Checking engine coolant level" in the "Maintenance and

do-it-yourself" section of this manual. Also see "If your vehicle overheats" in the "In case of emergency" section of this manual.

⚠ CAUTION

- **Running the engine with the engine oil pressure warning light on could cause serious damage to the engine almost immediately. Such damage is not covered by warranty. Turn off the engine as soon as it is safe to do so.**
- **If the gauge indicates engine coolant temperature over the normal range, stop the vehicle as soon as safely possible. If the engine is overheated, continued operation of the vehicle may seriously damage the engine. See "If your vehicle overheats" in the "In case of emergency" section for immediate action required.**

4WD 4WD warning light (4x4 model)

The 4WD warning light comes on when the key switch is turned to ON. It turns off soon after the engine is started.

If the engine or vehicle is not functioning properly, the warning light will either remain illuminated or blink. See "4WD warning light" in the "Starting and driving" section.

⚠ CAUTION

- **If the warning light comes on or blinks during operation, have your vehicle checked by an INFINITI dealer as soon as possible.**
- **Do not drive on dry hard surface roads in the 4H or 4LO position. If the 4WD warning light turns on when you are driving on dry hard surface roads:**
  - **in the AUTO or 4H position, shift the 4WD shift switch to 2WD.**
  - **in the 4LO position, stop the vehicle, move the automatic transmission shift selector lever to the N position and shift the 4WD shift switch to 2WD.**
- **If the warning light is still on after the above operation, have your vehicle checked by an INFINITI dealer as soon as possible.**

Low fuel warning light

This light comes on when the fuel level in the fuel tank is getting low. Refuel as soon as it is convenient, preferably before the fuel gauge reaches E (Empty). **There will be a small reserve of fuel in the tank when the fuel gauge needle reaches E (Empty).**

Low tire pressure warning light

Your vehicle is equipped with a Tire Pressure Monitoring System (TPMS) that monitors the tire pressure of all tires except the spare.

The low tire pressure warning light warns of low tire pressure or indicates that the TPMS is not functioning properly.

After the ignition switch is placed in the ON position, this light illuminates for about 1 second and turns off.

Low tire pressure warning:

If the vehicle is being driven with low tire pressure, the warning light will illuminate. If you select the tire pressure information in the display, the LOW PRESSURE warning message will be displayed. The tire pressure for each tire will also be displayed.

When the low tire pressure warning light illuminates, you should stop and adjust the tire pressure to the recommended COLD tire pressure shown on the Tire and Loading Information label. The low tire pressure warning light does not automatically turn off when the tire pressure is adjusted. After the tire is inflated to the recommended pressure, the vehicle must be driven at speeds above 16 MPH (25 km/h) to activate the TPMS and turn off the low tire pressure warning light. Use a tire pressure gauge to check the tire pressure.

For additional information, see "Tire Pressure Monitoring System (TPMS)" in the "Starting and driving" section and in the "In case of emergency" section.

TPMS malfunction:

If the TPMS is not functioning properly, the low tire pressure warning light will flash for approximately 1 minute when the ignition switch is turned ON. The light will remain on after the 1 minute. Have the system checked by an INFINITI dealer.

For additional information, see "Tire Pressure Monitoring System (TPMS)" in the "Starting and driving" section.

WARNING

- **If the light does not illuminate with the ignition switch turned ON, have the vehicle checked by an INFINITI dealer as soon as possible.**
- **If the light illuminates while driving, avoid sudden steering maneuvers or abrupt braking, reduce vehicle speed, pull off the road to a safe location and stop the vehicle as soon as possible. Driving with under-inflated tires may permanently damage the tires and increase the likelihood of tire failure. Serious vehicle damage could occur and may lead to an accident and could result in serious personal injury. Check the tire pressure for all four tires. Adjust the tire pressure to the recommended COLD tire pressure shown on the Tire and Loading Information label to turn the low tire pressure warning light OFF. If the light still comes on while driving after adjusting the tire pressure, a tire may be flat. If you have a flat tire, replace it with a spare tire as soon as possible.**
- **When a spare tire is mounted or a wheel is replaced, tire pressure will not be indicated, the TPMS will not function and the low tire pressure warning light will flash for approximately 1 minute. The light will remain on after 1 minute. Contact your INFINITI dealer as soon as possible for tire replacement and/or system resetting.**
- **Replacing tires with those not originally specified by INFINITI could affect the proper operation of the TPMS.**

CAUTION

- **The TPMS is not a substitute for the regular tire pressure check. Be sure to check the tire pressure regularly.**
- **If the vehicle is being driven at speeds of less than 16 MPH (25 km/h), the TPMS may not operate correctly.**
- **Be sure to install the specified size of tires to the 4 wheels correctly.**

Master warning light

This light comes on when various vehicle information display warnings appear.

Seat belt warning light and chime

The light and chime remind you to fasten your seat belts. The light illuminates whenever the ignition key is turned to the ON or START position and remains illuminated until the driver's seat belt is fastened. At the same time, the chime sounds for about 6 seconds unless the driver's seat belt is securely fastened.

The seat belt warning light may also illuminate if the front passenger's seat belt is not fastened when the front passenger's seat is occupied . For 7 seconds after the ignition switch is in the ON position, the system does not activate the warning light for the front passenger.

Refer to "Seat belts" in the "Safety—Seats, seat belts and supplemental restraint system" section for precautions on seat belt usage.

Supplemental air bag warning light

When the ignition switch is in the ON or START position, the supplemental air bag warning light illuminates for about 7 seconds and then turns off. This means the system is operational.

If any of the following conditions occur, the front air bag, side air bag, curtain and rollover air bag and pretensioner systems need servicing and your vehicle must be taken to an INFINITI dealer:

- The supplemental air bag warning light remains on after approximately 7 seconds.
- The supplemental air bag warning light flashes intermittently.
- The supplemental air bag warning light does not come on at all.

Unless checked and repaired, the supplemental restraint system (air bag system) and/or the pretensioner systems may not function properly. For additional details see "Supplemental restraint system" in the "Safety—Seats, seat belts and supplemental restraint system" section of this manual.

⚠ WARNING

If the supplemental air bag warning light is on, it could mean that the front air bag, side air bag, curtain and rollover air bags systems and/or pretensioner systems will not operate in an accident. To help avoid injury to yourself or others, have your vehicle checked by an INFINITI dealer as soon as possible.

INDICATOR LIGHTS

For additional information on warnings and indicators, see "Vehicle information display" later in this section.

Front passenger air bag status light

The front passenger air bag status light (2) will be lit and the passenger front air bag will be OFF depending on how the front passenger seat is being used.

For front passenger air bag status light operation, see "Front passenger air bag and status light" in the "Safety — Seats, seat belts and supplemental restraint system" section of this manual.

High beam indicator light (blue)

This blue light comes on when the headlight high beams are on and goes out when the low beams are selected.

The high beam indicator light also comes on when the passing signal is activated.

SERVICE ENGINE SOON Malfunction Indicator Light (MIL)

If this indicator light comes on steady or blinks while the engine is running, it may indicate a potential emission control malfunction.

The Malfunction Indicator Light may also come on steady if the fuel-filler cap is loose or missing, or if the vehicle runs out of fuel. Check to make sure the fuel-filler cap is installed and closed tightly, and that the vehicle has at least 3 gallons (11.4 liters) of fuel in the fuel tank.

After a few driving trips, the SERVICE ENGINE SOON light should turn off if no other potential emission control system malfunction exists.

If this indicator light comes on steady for 20 seconds and then blinks for 10 seconds when the engine is not running, it indicates that the vehicle is not ready for an emission control system inspection/maintenance test. See “Readiness for inspection/maintenance (I/M) test” in the “Technical and consumer information” section of this manual.

Operation

The malfunction indicator light will come on in one of two ways:

- Malfunction indicator light on steady — An emission control system malfunction has been detected. Check the fuel-filler cap. If the fuel-filler cap is loose or missing, tighten or install the cap and continue to drive the vehicle. The SERVICE ENGINE SOON light should turn off after a few driving trips. If the SERVICE ENGINE SOON light does not turn off after a few driving trips, have the vehicle inspected by an INFINITI dealer. You do not need to have your vehicle towed to the dealer.
- Malfunction indicator light blinking — An engine misfire has been detected which may damage the emission control system. To reduce or avoid emission control system damage:
  - do not drive at speeds above 45 MPH (72 km/h).
  - avoid hard acceleration or deceleration.
  - avoid steep uphill grades.
  - if possible, reduce the amount of cargo being hauled or towed.

The malfunction indicator light may stop blinking and come on steady. Have the vehicle inspected by an INFINITI dealer. You do not need to have your vehicle towed to the dealer.

⚠ CAUTION

Continued vehicle operation without having the emission control system checked and repaired as necessary could lead to poor driveability, reduced fuel economy, and possible damage to the emission control system.

Security indicator light

This light blinks whenever the ignition switch is in the LOCK, OFF or ACC position. This function indicates the security system equipped on the vehicle is operational.

For additional information, see “Security systems” later in this section.

SLIP Slip indicator light

This indicator light will blink when the traction control system is limiting wheel spin. Slippery road conditions may exist if the slip indicator blinks on. If this happens, adjust your driving accordingly.

The slip indicator light also comes on when you turn the ignition switch to the ON position. The light will turn off after about 2 seconds if the system is operational. If the light does not come on or does not go off, have the traction control system checked by an INFINITI dealer.

Turn signal/hazard indicator lights

The appropriate light flashes when the turn signal switch is activated.

Both lights flash when the hazard switch is turned on.

Vehicle Dynamic Control (VDC) OFF indicator light

This indicator light comes on when the Vehicle Dynamic Control (VDC) off switch is pushed to OFF, the transfer case is in the 4LO position (4X4 model), or when the VDC system is not functioning properly. This indicates the VDC system is not operating.

Push the VDC off switch again or restart the engine and the system will operate normally. See "Vehicle Dynamic Control (VDC) system" in the "Starting and driving" section of this manual.

The VDC off light also comes on when you turn the ignition key to the ON position. The light will turn off after about 2 seconds if the system is operational. If the light stays on or comes on along with the SLIP indicator light while you are driving, have the VDC system checked by an INFINITI dealer.

While the VDC system is operating, you might feel slight vibration or hear the system working when starting the vehicle or accelerating, but this is normal.

AUDIBLE REMINDERS

Brake pad wear warning

The disc brake pads have audible wear warnings. When a disc brake pad requires replacement, it makes a high pitched scraping sound when the vehicle is in motion, whether or not the brake pedal is depressed. Have the brakes checked as soon as possible if the warning sound is heard.

Key reminder chime

A chime sounds if the driver's door is opened while the key is left in the ignition switch. Remove the key and take it with you when leaving the vehicle.

Light reminder chime

With the ignition switch in the OFF position, a chime sounds when the driver's door is opened if the headlights or parking lights are on.

Turn the headlight control switch off before leaving the vehicle.

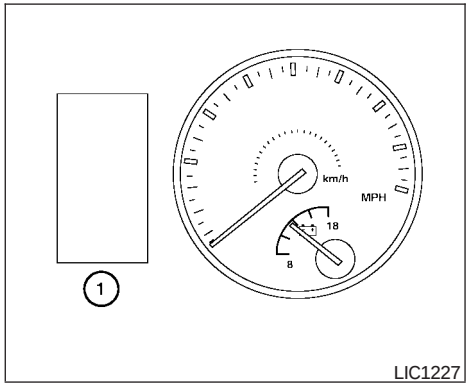

The vehicle information display ① is located to the left of the speedometer. It displays such items as:

- automatic transmission position indicator
- cruise control system/Intelligent Cruise Control (ICC) system (if so equipped) information
- Intelligent Key operation information
- some indicators and warnings
- other information

For details about the Intelligent Key system, see "Intelligent Key system" in the "Pre-driving checks and adjustments" section.

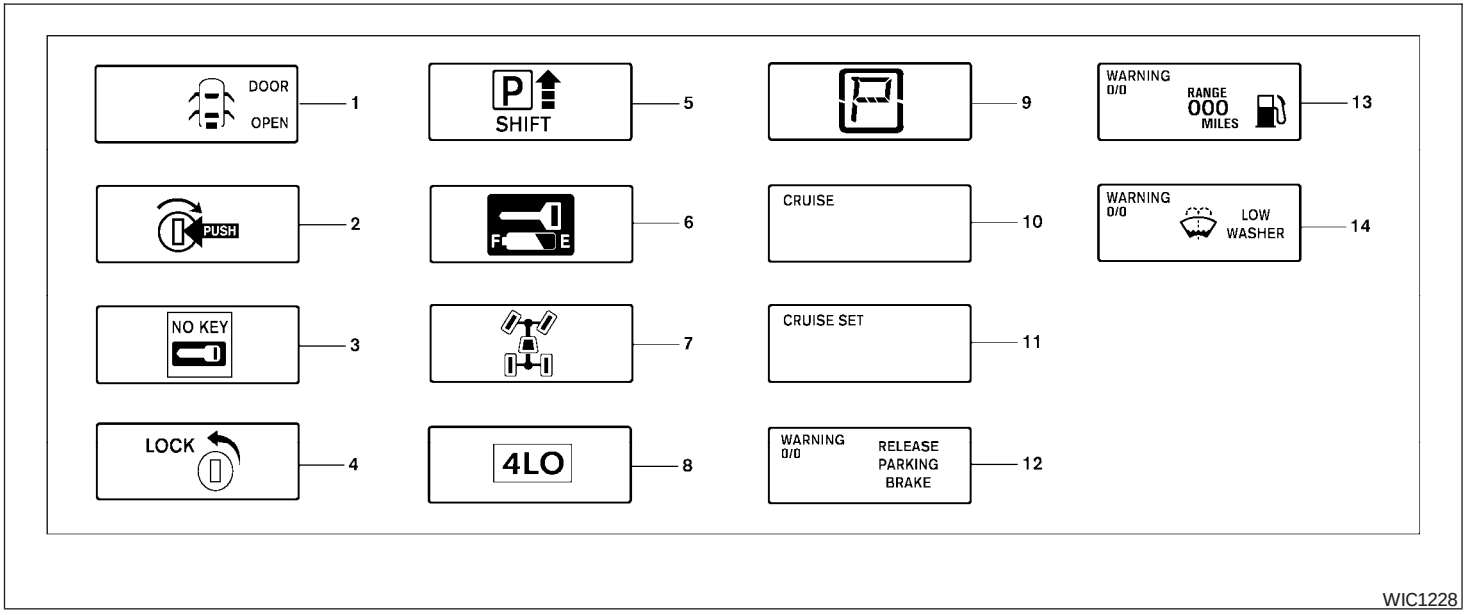

VEHICLE INFORMATION DISPLAY WARNINGS AND INDICATORS

1. Door and liftgate open warning
2. Engine start operation indicator
3. No key warning
4. Lock warning
5. Shift P warning
6. Intelligent Key battery discharge indicator
7. 4WD shift indicator (4x4 model)
8. Transfer 4LO position indicator (4x4 model)
9. Automatic transmission position indicator

10. Cruise main switch indicator/Intelligent Cruise Control (ICC) system main switch indicator (if so equipped)
11. Cruise set switch indicator/Intelligent Cruise Control (ICC) system set switch indicator
12. Parking brake warning
13. Low fuel warning
14. Lower windshield washer fluid warning

Door and liftgate open warning

This warning illuminates when a door, the liftgate or the liftgate glass has been opened when the ignition switch is on.

Engine start operation indicator

This indicator illuminates when the ignition switch is pushed, but not turned.

No key warning (Intelligent Key model)

This warning illuminates following two conditions:

1. When the ignition switch is pushed and the Intelligent Key cannot be recognized by the system. If this warning illuminates, you cannot start the engine.

   Check for the following causes and perform the assigned remedies:

   – The battery of the Intelligent Key carried with you is discharged completely. Replace the battery with a new one.

   – The Intelligent Key carried with you is not registered to the system. Use the registered Intelligent Key.

   – You do not have an Intelligent Key with you. Carry an Intelligent Key with you.

2. When the door is closed with the Intelligent Key left outside the vehicle and the ignition switch is in the ACC or ON position. A chime will also sound.

Lock warning (Intelligent Key model)

This warning illuminates and a chime sounds if the ignition switch has been in the ACC or ON position and then placed in the OFF position.

Place the ignition switch in the LOCK position and the warning and chime will turn off.

Refer to “Shift P warning” in this section for additional information.

SHIFT P warning (Intelligent Key model)

This warning illuminates when the ignition switch is in the ACC or OFF position and the shift selector lever is in any position other than (Park) position. Also, a chime sounds when the ignition switch is in the OFF position.

If this warning illuminates, move the shift selector lever to the P (Park) position or start the engine.

If the shift selector lever is moved to the P (Park) position, the lock warning will appear. Refer to “Lock warning” in this section.

For additional information about Intelligent Key, see “Intelligent Key system” in the “Pre-driving checks and adjustments” section.

Intelligent Key battery discharge indicator (Intelligent Key model)

This indicator illuminates when the Intelligent Key battery is running out of power.

If this indicator illuminates, replace the battery with a new one. See “Intelligent Key battery” in the “Maintenance and do-it-yourself” section.

4WD shift indicator (4x4 model)

While the engine is running, the 4WD shift indicator will illuminate the position selected by the 4WD shift switch.

The 4WD shift indicator may blink while shifting from one drive mode to the other.

Transfer 4LO position indicator (4x4 model)

This indicator illuminates when the 4WD shift switch is set in the 4LO position with the ignition key in the ON position.

If the 4WD shift switch is set in the 4LO position and the indicator blinks, stop the vehicle, drive slowly forward and the indicator will turn on.

When you shift between 4H and 4LO, stop the vehicle, move the automatic transmission selector lever to the N (Neutral) position, then depress and turn the 4WD shift switch to 4LO or 4H.

The transfer case may be damaged if you shift the switch while driving.

You cannot move the transfer 4WD shift switch between 4H and 4LO unless you have first stopped the vehicle and moved the automatic transmission shift selector lever to N (Neutral). Make sure the transfer 4LO position indicator illuminates when you shift the 4WD shift switch to 4LO.

The indicator may blink while shifting from one drive mode to the other.

Automatic transmission position indicator

When the ignition key is placed in the ON position, this indicator shows the automatic transmission shift selector lever position. See “Driving the vehicle” in the “Starting and driving” section of this manual.

Cruise main switch indicator (if so equipped)

This indicator illuminates when the cruise control main switch is pushed. The indicator turns off when the main switch is pushed again. When the cruise main switch indicator illuminates, the cruise control system is operational.

Cruise set switch indicator

This indicator illuminates while the vehicle speed is controlled by the cruise control system. If the indicator blinks while the engine is running, it may indicate the cruise control system is not functioning properly. Have the system checked by an INFINITI dealer.

Intelligent Cruise Control (ICC) system main switch indicator (if so equipped)

This indicator is displayed when the Intelligent Cruise Control (ICC) system main switch is pushed. When the main switch is pushed again, the indicator turns off. While the main switch indicator is displayed, the ICC system is operational.

Intelligent Cruise Control (ICC) system set switch indicator (if so equipped)

This indicator is displayed while the vehicle speed is controlled by the Intelligent Cruise Control (ICC) system. If the indicator blinks while the engine is running, it may indicate that the ICC system is not functioning properly. Have the system checked by an INFINITI dealer.

See Intelligent Cruise Control (ICC) system in the “Starting and driving” section for details.

Parking brake warning

This warning illuminates when the parking brake is set and the vehicle is driven.

Low fuel warning

This warning illuminates when the fuel level in the fuel tank is getting low. Refuel as soon as it is convenient, preferably before the fuel gauge reaches E (Empty). **There will be a small reserve of fuel in the tank when the fuel gauge needle reaches E (Empty).**

Low windshield washer fluid warning

This warning illuminates when the windshield washer fluid is at a low level. Add windshield washer fluid as necessary. See “Window washer fluid” in the “Maintenance and do-it-yourself” section of this manual.

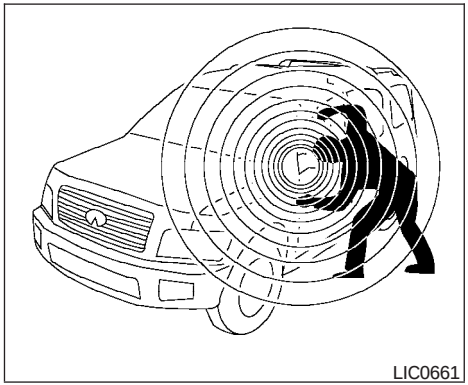

Your vehicle has two types of security systems:

- Vehicle security system
- INFINITI Vehicle Immobilizer System

VEHICLE SECURITY SYSTEM

The vehicle security system provides visual and audible alarm signals if someone opens the doors or hood when the system is armed. It is not, however, a motion detection type system that activates when a vehicle is moved or when a vibration occurs.

The system helps deter vehicle theft but cannot prevent it, nor can it prevent the theft of interior or exterior vehicle components in all situations. Always secure your vehicle even if parking for a brief period. Never leave your keys in the ignition, and always lock the vehicle when unattended. Be aware of your surroundings, and park in secure, well-lit areas whenever possible.

Many devices offering additional protection, such as component locks, identification markers, and tracking systems, are available at auto supply stores and specialty shops. Your INFINITI dealer may also offer such equipment. Check with your insurance company to see if you may be eligible for discounts for various theft protection features.

How to arm the vehicle security system

1. Close all windows. **(The system can be armed even if the windows are open.)**
2. Turn the ignition switch to the LOCK position and remove the key.
3. Close all doors and the hood. Lock all doors. The doors can be locked with:
   - the power door lock switch (if the door is opened, locked and then closed).
   - the mechanical key.
   - any request switch.
   - the Intelligent Key.

   Intelligent Key operation:
   - Push the button. All doors lock. The hazard lights flash twice and the horn beeps once to indicate all doors are locked.
   - When the button is pushed with all doors locked, the hazard lights flash twice and the horn beeps once as a reminder that the doors are already locked.

   The horn may or may not beep. Refer to “Comfort & Convenience settings” in the “Monitor, climate, audio, phone and voice recognition systems” section.
4. Confirm that the indicator light comes on. The light stays on for about 30 seconds. The vehicle security system is now pre-armed. After about 30 seconds the vehicle security system automatically shifts into the armed phase. The light begins to flash once every 3 seconds. If, during the 30-second pre-arm time period, the driver’s door is unlocked by the mechanical key, a request switch, the Intelligent Key or if the ignition switch is turned to ACC or ON, the system will not arm.

- **If the key is turned slowly when locking the driver’s door, the system may not arm. Furthermore, if the key is turned**

beyond the vertical position toward the unlock position to remove the key, the system may be disarmed when the key is removed. If the indicator light fails to glow for 30 seconds, unlock the door once and lock it again.

- **Even when the driver and/or passengers are in the vehicle, the system will arm with all doors closed and locked with the ignition key in the OFF position.**

Vehicle security system activation

The vehicle security system will give the following alarm:

- The headlights blink and the horn sounds intermittently.
- The alarm automatically turns off after approximately 50 seconds. However, the alarm reactivates if the vehicle is tampered with again. The alarm can be shut off by unlocking the driver's door with the mechanical key, or by pressing the button on the Intelligent Key.

The alarm is activated by:

- opening a door without using the mechanical key or Intelligent Key (even if the door is unlocked by using the inside lock knob or the power door lock switch).
- opening the hood.

How to stop an activated alarm

The alarm stops only by unlocking the driver's door with the mechanical key, a request switch or by pressing the button on the Intelligent Key.

INFINITI VEHICLE IMMOBILIZER SYSTEM

The INFINITI Vehicle Immobilizer System will not allow the engine to start without the use of a registered INFINITI Vehicle Immobilizer System key.

If the engine fails to start using a registered INFINITI Vehicle Immobilizer System key (for example, when interference is caused by another INFINITI Vehicle Immobilizer System key, an automated toll road device or automatic payment device on the key ring), restart the engine using the following procedures:

1. Leave the ignition switch in the ON position for approximately 5 seconds.
2. Turn the ignition switch to the OFF or LOCK position, and wait approximately 10 seconds.
3. Repeat steps 1 and 2.
4. Restart the engine while holding the device (which may have caused the interference) separate from the registered INFINITI Vehicle Immobilizer System key.

If the no start condition re-occurs, INFINITI recommends placing the registered INFINITI Vehicle Immobilizer System key on a separate key ring to avoid interference from other devices.

Statement related to Section 15 of FCC Rules for INFINITI Vehicle Immobilizer System (CONT ASSY — IMMOBILIZER, ANT ASSY — IMMOBILIZER)

This device complies with part 15 of the FCC Rules and RSS-210 of Industry Canada. Operation is subject to the following two conditions;

(1) This device may not cause harmful interference, and (2) this device must accept any interference received, including interference that may cause undesired operation of the device.

CHANGES OR MODIFICATIONS NOT EXPRESSLY APPROVED BY THE PARTY RESPONSIBLE FOR COMPLIANCE COULD VOID THE USER'S AUTHORITY TO OPERATE THE EQUIPMENT.

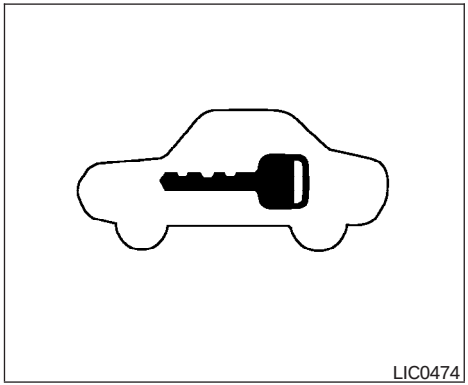

Security indicator light

The security indicator light blinks whenever the ignition switch is in the LOCK, OFF or ACC position. This function indicates the INFINITI Vehicle Immobilizer System is operational.

If the INFINITI Vehicle Immobilizer System is malfunctioning, the light will remain on while the ignition key is in the ON position.

If the light still remains on and/or the engine will not start, see an INFINITI dealer for service as soon as possible. Please bring all INFINITI Vehicle Immobilizer System keys that you have when visiting your INFINITI dealer for service.

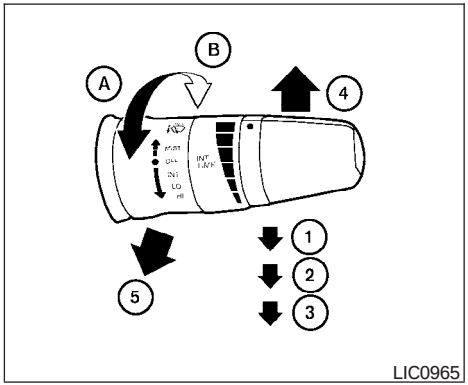

SWITCH OPERATION

The windshield wiper and washer operates when the ignition switch is in the ON position.

Push the lever down to operate the wiper at the following speed:

① Intermittent — intermittent operation can be adjusted by turning the knob toward Ⓐ (Slower) or Ⓑ (Faster). Also, the intermittent operation speed varies in accordance with the vehicle speed. (For example, when the vehicle speed is high, the intermittent operation speed will be faster.)

NOTE:

You can turn on or turn off the driving speed dependent intermittent wiper function. Refer to "Comfort and convenience settings" in the "Monitor, climate, audio, phone and voice recognition systems" section later in this manual.

② Low — continuous low speed operation

③ High — continuous high speed operation

Push the lever up ④ to have one sweep operation of the wiper.

Pull the lever toward you ⑤ to operate the washer. The wiper will also operate several times.

⚠WARNING

In freezing temperatures the washer solution may freeze on the windshield and obscure your vision which may lead to an accident. Warm the windshield with the defroster before you wash the windshield.

REAR WINDOW WIPER AND WASHER SWITCH

⚠ CAUTION

- **Do not operate the washer continuously for more than 30 seconds.**
- **Do not operate the washer if the reservoir tank is empty.**
- **Do not fill the window washer reservoir tank with washer fluid concentrates at full strength. Some methyl alcohol based washer fluid concentrates may permanently stain the grille if spilled while filling the window washer reservoir tank.**
- **Pre-mix washer fluid concentrates with water to the manufacturer's recommended levels before pouring the fluid into the window washer reservoir tank. Do not use the window washer reservoir tank to mix the washer fluid concentrate and water.**

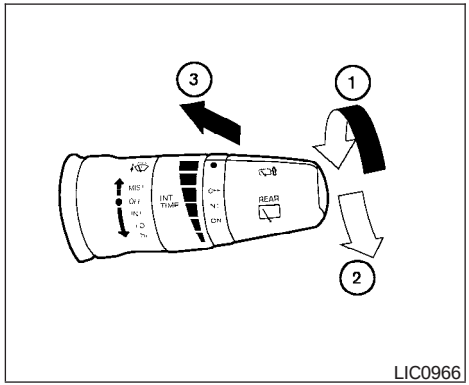

LIC0966

The rear window wiper and washer operate when the ignition switch is in the ON position.

Turn the switch clockwise from the OFF position to operate the wiper.

① Intermittent (INT) – intermittent operation (not adjustable)

② ON – continuous low speed operation

Push the switch forward ③ to operate the washer. The wiper will also operate several times.

⚠ WARNING

In freezing temperatures the washer solution may freeze on the window and obscure your vision. Warm the rear window with the defroster before you wash the rear window.

⚠ CAUTION

- **Do not operate the washer continuously for more than 30 seconds.**
- **Do not operate the washer if the reservoir tank is empty.**
- **Do not fill the window washer reservoir tank with washer fluid concentrates at full strength. Some methyl alcohol based washer fluid concentrates may permanently stain the grille if spilled while filling the window washer reservoir tank.**
- **Pre-mix washer fluid concentrates with water to the manufacturer's recommended levels before pouring the fluid into the window washer reservoir tank. Do not use the window washer reservoir tank to mix the washer fluid concentrate and water.**

REAR WINDOW AND OUTSIDE MIRROR DEFROSTER SWITCH

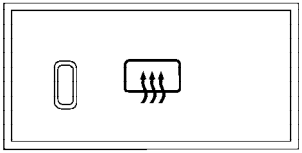

LIC1173

To defrost the rear window glass and outside mirrors:

Start the engine and push the rear window defroster switch. The rear window defroster indicator light on the display screen comes on. Push the switch again to turn the defroster off.

The rear window defroster automatically turns off after approximately 15 minutes.

⚠CAUTION

When cleaning the inner side of the rear window, be careful not to scratch or damage the rear window defroster.

HEADLIGHT AND TURN SIGNAL SWITCH

XENON HEADLIGHTS

⚠WARNING

⚠HIGH VOLTAGE

- **When xenon headlights are on, they produce a high voltage. To prevent an electric shock, never attempt to modify or disassemble. Always have your xenon headlights replaced at an INFINITI dealer.**
- **Xenon headlights provide considerably more light than conventional headlights. If they are not correctly aimed, they might temporarily blind an oncoming driver or the driver ahead of you and cause a serious accident. If headlights are not aimed correctly, immediately take your vehicle to an INFINITI dealer and have the headlights adjusted correctly.**

When the xenon headlight is initially turned on, its brightness or color varies slightly. However, the color and brightness will soon stabilize.

- **The life of xenon headlights will be shortened by frequent on-off operation. It is generally desirable not to turn off the headlights for short intervals (for example, when the vehicle stops at a traffic signal). Even when the daytime running lights are active (Canada only), the xenon headlights do not turn on. This way the life of the xenon headlights is not reduced.**
- **If the xenon headlight bulb is close to burning out, the brightness will drastically decrease, the light will start blinking, or the color of the light will become reddish. If one or more of the above signs appear, contact an INFINITI dealer.**

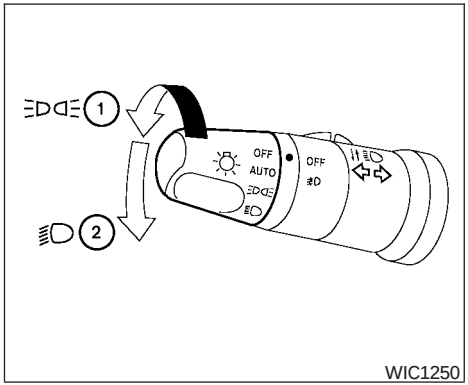

WIC1250

HEADLIGHT CONTROL SWITCH

Lighting

① When turning the switch to the position, the front parking, tail, license plate and instrument panel lights come on.

② When turning the switch to the position, the headlights come on and all the other lights remain on.

⚠ CAUTION

Use the headlights with the engine running to avoid discharging the vehicle battery.

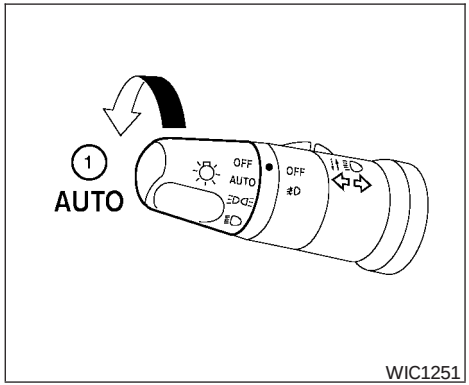

WIC1251

Autolight system

The autolight system allows the headlights to be set so they turn on and off automatically. The autolight system can:

- Turn on the headlights, front parking, tail, license plate and instrument panel lights automatically when it is dark.
- Turn off all the lights when it is light.
- Keep all the lights on for up to 180 seconds after you turn the key to OFF and all doors are closed.

NOTE:

Autolight activation sensitivity and the time delay for autolight shutoff can be adjusted. See “Comfort and convenience settings” in the “Monitor, climate, audio, phone and voice recognition systems”section later in this manual.

To turn on the autolight system:

1. Turn the headlight switch to the AUTO position ①.
2. Turn the ignition switch to ON.
3. The autolight system automatically turns the headlights on and off.

Initially, if the ignition switch is turned OFF and a door is opened and left open, the headlights remain ON for 5 minutes. If another door is opened during the 5 minutes, then the 5 minute timer is reset.

To turn the autolight system off, turn the switch to the OFF, , or position.

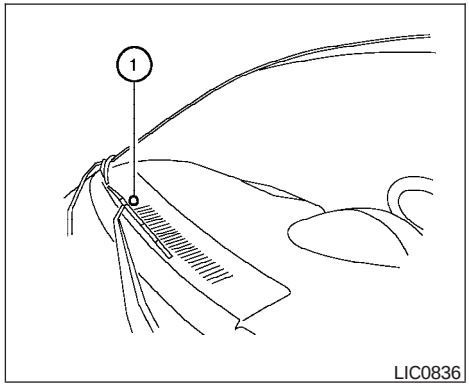

Be sure you do not put anything on top of the autolight sensor ① located in the top side of the instrument panel. The autolight sensor controls the autolight; if it is covered, the autolight sensor reacts as if it is dark out and the headlights will illuminate. If this occurs while parked with the engine off and the key in the ON position, your vehicle’s battery could become discharged.

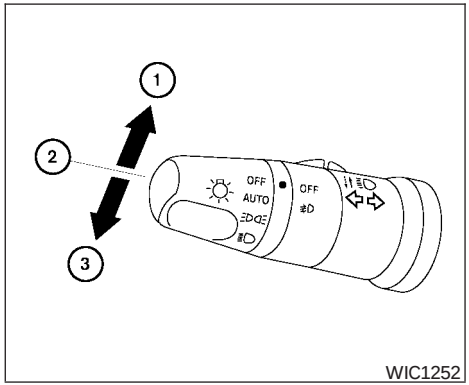

Headlight beam select

① To select the high beam function, push the lever forward. The high beam lights come on and the light illuminates.

② Pull the lever back to select the low beam.

③ Pulling and releasing the lever flashes the headlight high beams on and off.

Battery saver system

If the ignition switch is turned OFF while the headlight switch is in the ≡DC≡ or ≡D position, the headlights will turn off after 5 minutes.

After the headlights automatically turn off with the headlight switch in the ≡DC≡ or ≡D position, the headlights will illuminate again for 5 minutes if the headlight switch is moved to the OFF position and then turned to the ≡DC≡ or ≡D position.

⚠ CAUTION

Even though the battery saver feature automatically turns off the headlights after a period of time, you should turn the headlight switch to the OFF position when the engine is not running to avoid discharging the vehicle battery.

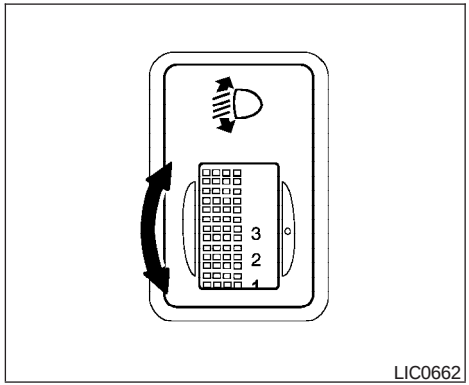

Headlight aiming control

Depending on the number of occupants in the vehicle and the load it is carrying, the headlight axis may be higher than desired. If the vehicle is traveling on a hilly road, the headlights may directly hit the rearview mirror of the vehicle ahead or the windshield of the oncoming vehicle. The light axis can be lowered with the operation of the switch.

The larger the number designated on the switch, the lower the axis.

When traveling without a heavy load or on a flat road, select position 0.

⚠ WARNING

Xenon headlights are extremely bright compared to conventional headlights. If the xenon headlights hit the rearview mirror of the vehicle ahead or the windshield of oncoming vehicle, the driver of these vehicles may have difficulty driving because of the brightness. Use the headlight aiming control switch to lower the light axis. See "Xenon headlights" earlier in this section for additional information.

DAYTIME RUNNING LIGHT SYSTEM (Canada only)

The headlights automatically illuminate at a reduced intensity when the engine is started with the parking brake released. The daytime running lights operate with the headlight switch in the OFF position or in the ≡DC≡ position. Turn the headlight switch to the ≡D position for full illumination when driving at night.

If the parking brake is applied before the engine is started, the daytime running lights do not illuminate. The daytime running lights illuminate when the parking brake is released. The daytime running lights will remain on until the ignition switch is turned off.

⚠ WARNING

When the daytime running light system is active, tail lights on your vehicle are not on. It is necessary at dusk to turn on your headlights. Failure to do so could cause an accident injuring yourself and others.

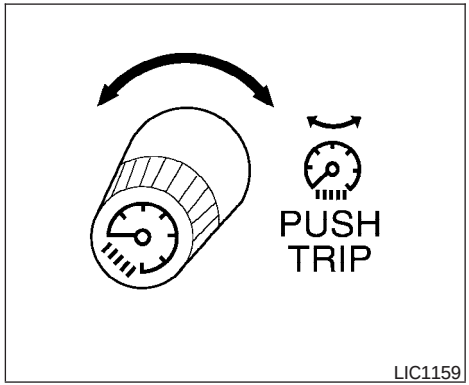

INSTRUMENT BRIGHTNESS CONTROL

The instrument brightness control operates when the headlight control switch is in the ≡D⊂≡ , ≡D or AUTO position (with autolights activated).

Turn the control to adjust the brightness of instrument panel lights when driving at night.

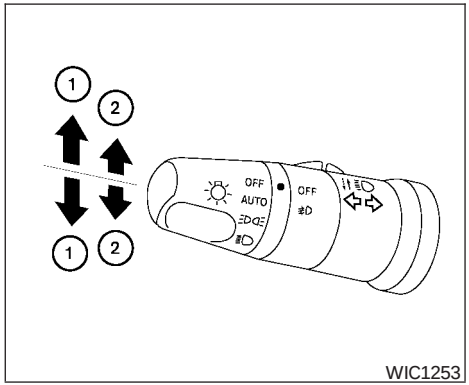

TURN SIGNAL SWITCH

Turn signal

① Move the lever up or down to signal the turning direction. When the turn is completed, the turn signals cancel automatically.

Lane change signal

② To signal a lane change, move the lever up or down to the point where the indicator light begins to flash, but the lever does not latch.

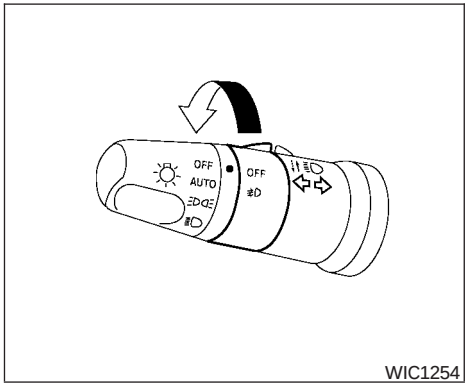

WIC1254

FOG LIGHT SWITCH

To turn the fog lights on, turn the headlight switch to the position, then turn the fog light switch to the position.

To turn the fog lights on with the headlight switch in the AUTO position, the headlights must be on, then turn the fog light switch to the position.

To turn the fog lights off, turn the fog light switch to the OFF position.

The headlights must be on and the low beams selected for the fog lights to operate. The fog lights automatically turn off when the high beam headlights are selected.

HAZARD WARNING FLASHER SWITCH

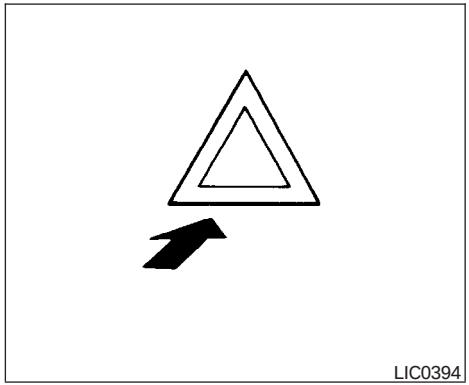
LIC0394

Push the switch on to warn other drivers when you must stop or park under emergency conditions. All turn signal lights flash.

⚠ WARNING

- **If stopping for an emergency, be sure to move the vehicle well off the road.**
- **Do not use the hazard warning flashers while moving on the highway unless unusual circumstances force you to drive so slowly that your vehicle might become a hazard to other traffic.**
- **Turn signals do not work when the hazard warning flasher lights are on.**

The flashers will operate with the ignition switch in any position.

Some state laws may prohibit the use of the hazard warning flasher switch while driving.

HORN

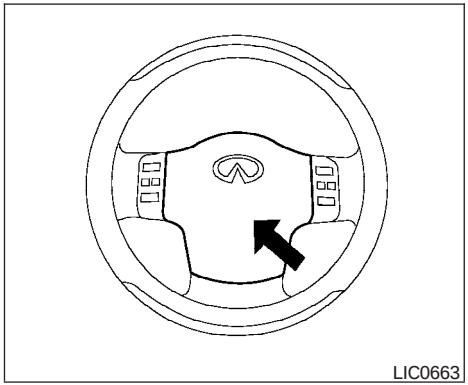

To sound the horn, push the center pad area of the steering wheel.

⚠ WARNING

Do not disassemble the horn. Doing so could affect proper operation of the supplemental front air bag system. Tampering with the supplemental front air bag system may result in serious personal injury.

HEATED SEATS

The front and 2nd row seats are warmed by built-in heaters.

1. Start the engine.
2. Push the ▬ (low) or ▬▬ (high) position of the switch, as desired, depending on the temperature. The indicator light in the switch will illuminate.

   The heater is controlled by a thermostat, automatically turning the heater on and off. The indicator light will remain on as long as the switch is on.
3. When the seat is warmed or before you leave the vehicle, be sure to turn the switch off.

⚠ CAUTION

- **Do not use the seat heater for extended periods or when no one is using the seat.**
- **Do not put anything on the seat which insulates heat, such as a blanket, cushion, seat cover, etc. Otherwise, the seat may become overheated.**
- **Do not place anything hard or heavy on the seat or pierce it with a pin or similar object. This may result in damage to the heater.**
- **Any liquid spilled on the heated seat should be removed immediately with a dry cloth.**
- **When cleaning the seat, never use gasoline, benzine, thinner, or any similar materials.**
- **If any abnormalities are found or the heated seat does not operate, turn the switch off and have the system checked by your INFINITI dealer.**
- **The battery could run down if the seat heater is operated while the engine is not running.**

HEATED STEERING WHEEL

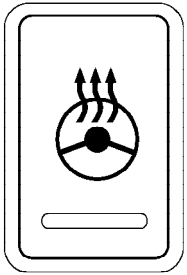

LIC0421

The heated steering wheel system is designed to operate only when the surface temperature of the steering wheel is below approximately 68°F (20°C).

The heated steering wheel switch is located on the front of the center console box.

Push the heated steering wheel switch to warm the steering wheel after the engine starts. The indicator light will come on.

If the surface temperature of the steering wheel is below 68°F (20°C), the system will heat the steering wheel to approximately 86°F (30°C), then turn off automatically.

Push the switch again to turn the heated steering wheel off manually. The indicator light will go off.

NOTE:

The heated steering wheel switch is equipped with a 30 minute timer. After the switch has been activate for 30 minutes, the system will automatically turn off. If the surface temperature of the steering wheel is above 68°F (20°C) when the switch is turned on, the system will not heat the steering wheel. This is not a malfunction.

VEHICLE DYNAMIC CONTROL (VDC) OFF SWITCH

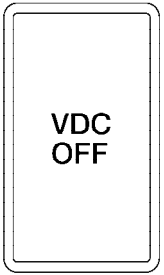

WIC0534

The vehicle should be driven with the Vehicle Dynamic Control (VDC) system on for most driving conditions.

If the vehicle is stuck in mud or snow, the VDC system reduces the engine output to reduce wheel spin. The engine speed will be reduced even if the accelerator is depressed to the floor. If maximum engine power is needed to free a stuck vehicle, turn the VDC system off.

To turn off the VDC system, push the VDC OFF switch. The VDC OFF indicator will come on.

Push the VDC OFF switch again or restart the engine to turn ON the system. See “Vehicle Dynamic Control (VDC) system” in the “Starting and driving” section.

REAR SONAR SYSTEM OFF SWITCH

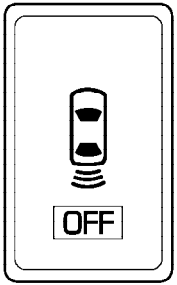

LIC0471

⚠ WARNING

The rear sonar system is a convenience but it is not a substitute for proper backing. Always turn and check that it is safe to do so before backing up. Always back up slowly.

The rear sonar system is active when the ignition is in the ON position and the shift selector lever is in R (Reverse).

When sensors detect obstacles within 6 ft (1.8 m) of the rear bumper, a beeping tone is emitted.

The rear sonar system can be disabled by pushing the OFF switch. When the system is disabled, the indicator light on the switch will illuminate. Push the switch again to enable the system. The indicator light will go off.

The system will automatically reset the next time the ignition switch is turned on.

See “Rear sonar system” in the “Starting and driving” section.

FRONT SONAR SYSTEM OFF SWITCH (If so equipped)

LIC1182

⚠ WARNING

The front sonar system is a convenience but it is not a substitute for proper driving.

The front sonar system is active when the ignition is in the ON position and the shift selector lever is in a forward gear position.

When sensors detect obstacles within 6 ft (1.8 m) of the front bumper, a beeping tone is emitted.

The front sonar system can be disabled by pushing the OFF switch. When the system is disabled, the indicator light on the switch will illuminate.

Push the switch again to enable the system. The indicator light will go off.

The system will automatically reset the next time the ignition switch is turned on.

See “Front sonar system” in the “Starting and driving” section.

TOW MODE SWITCH (if so equipped)

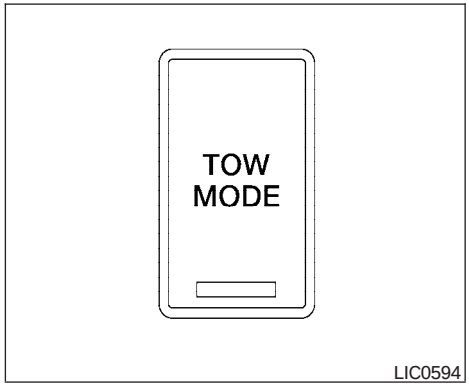

Tow mode should be used when pulling a heavy trailer or hauling a heavy load. Driving the vehicle in the tow mode with no trailer/load or light trailer/light load will not cause any damage. However, fuel economy maybe reduced and the transmission/engine driving characteristics may feel unusual.

Press the tow mode switch to activate tow mode. The indicator light on the tow mode switch illuminates when tow mode is selected. Press the tow mode switch again to turn tow mode OFF.

Tow mode is automatically canceled when the key is turned OFF.

For additional information, refer to “Tow mode” in the “Technical and consumer information” section later in this manual.

CLOCK

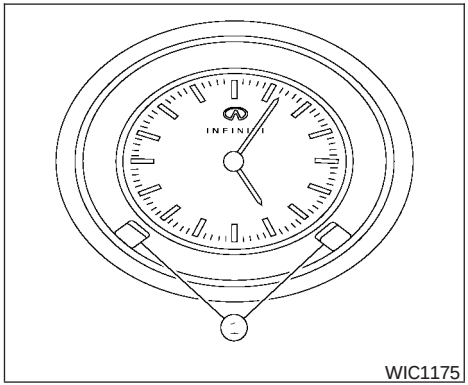

WIC1175

If the power supply is disconnected, the clock will not indicate the correct time. Readjust the time.

ADJUSTING THE TIME

To adjust the time, press either adjusting button ① repeatedly until correct time is displayed.

POWER OUTLET

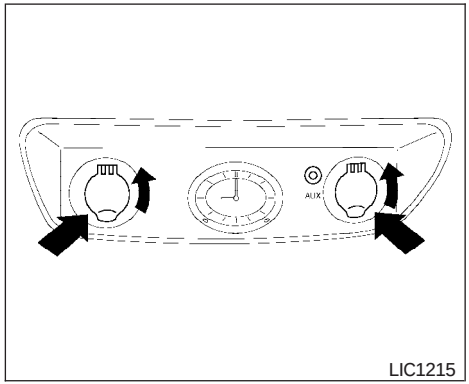

LIC1215

Front row

The power outlets are for powering electrical accessories such as cellular telephones.

The power outlets located on the driver's side of the instrument panel and in the luggage area are powered directly by the vehicle's battery.

The power outlets located on the passenger's side of the instrument panel and in the 2nd row are powered only when the ignition key is in the ACC or ON position.

Open the cap to use a power outlet.

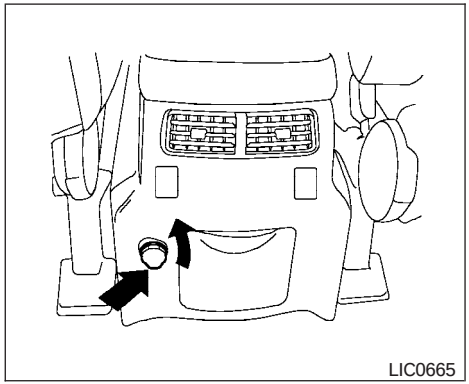
LIC0665

2nd row

⚠ CAUTION

- **The outlet and plug may be hot during or immediately after use.**
- **Only certain power outlets are designed for use with a cigarette lighter unit. Do not use any other power outlet for an accessory lighter. See your INFINITI dealer for additional information.**
- **Do not use with accessories that exceed a 12 volt, 120W (10A) power draw. Do not use double adapters or more than one electrical accessory.**

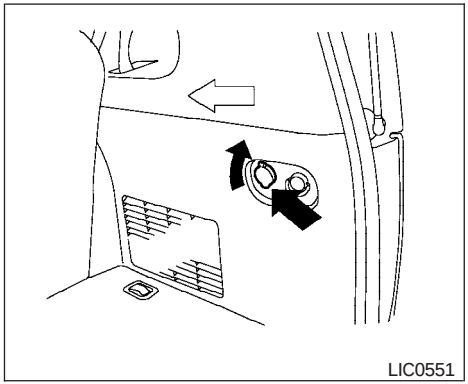

Luggage area

- **Use power outlets with the engine running to avoid discharging the vehicle battery.**
- **Avoid using power outlets when the air conditioner, headlights or rear window defroster is on.**
- **Before inserting or disconnecting a plug, be sure the electrical accessory being used is turned OFF.**
- **Push the plug in as far as it will go. If good contact is not made, the plug may overheat or the internal temperature fuse may open.**
- **When not in use, be sure to close the cap. Do not allow water to contact the outlet.**

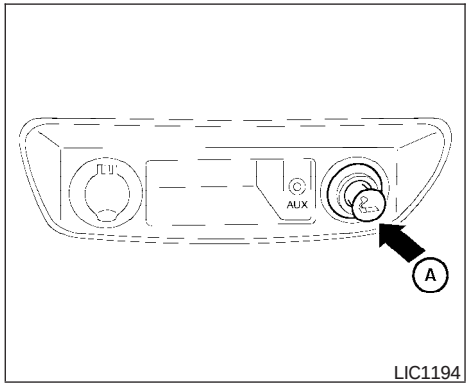

This power outlet Ⓐ can be used with an accessory cigarette lighter element. Contact your INFINITI dealer for information.

This power outlet can also be used for powering electrical accessories such as cellular telephones.

⚠ CAUTION

- **The cigarette lighter should not be used while driving so full attention may be given to vehicle operation.**
- **The outlet and plug may be hot during or immediately after use.**

- **Do not use any other power outlet for an accessory lighter.**
- **Do not use with accessories that exceed a 12 volt, 120W (10A) power draw. Do not use double adapters or more than one electrical accessory.**
- **Use power outlets with the engine running to avoid discharging the vehicle battery.**
- **Avoid using power outlets when the air conditioner, headlights or rear window defroster is on.**
- **Before inserting or disconnecting a plug, be sure the electrical accessory being used is turned OFF.**
- **Push the plug in as far as it will go. If good contact is not made, the plug may overheat or the internal temperature fuse may open.**
- **When not in use, be sure to close the cap. Do not allow water to contact the outlet.**

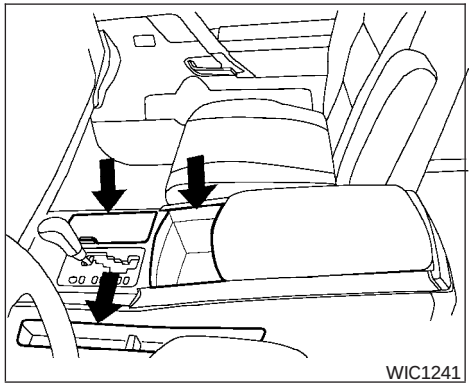

CONSOLE BOX

Console box storage trays

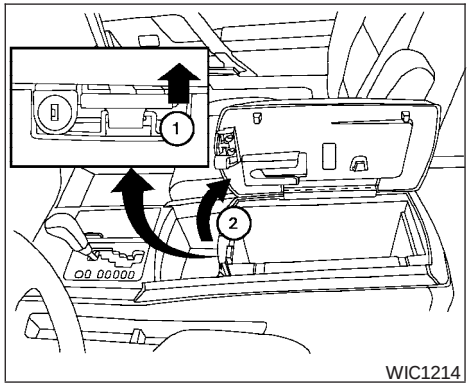

Console box storage

Pull up on the lever ① to open the console box lid ②.

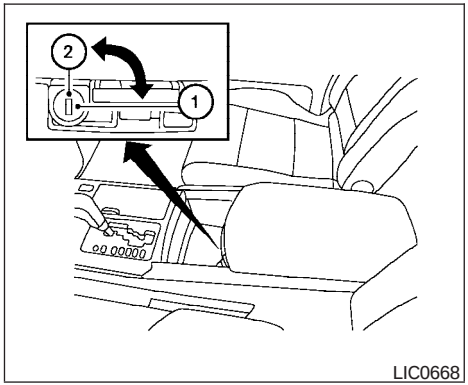

Console box lock

Use the master key to lock ① or unlock ② the console box.

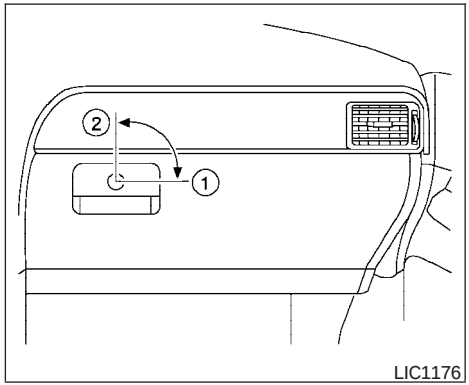

GLOVE BOX

Open the glove box by pulling the handle. Use the master key when locking ① or unlocking ② the glove box.

⚠WARNING

Keep glove box lid closed while driving to help prevent injury in an accident or a sudden stop.

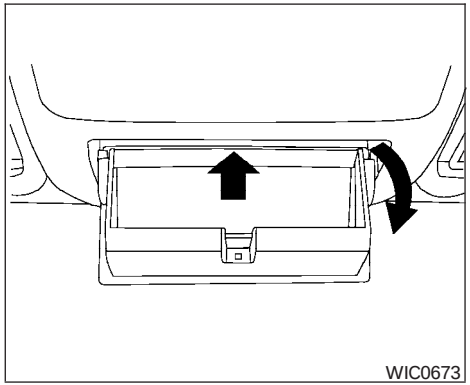

SUNGLASSES HOLDER

To open the sunglasses holder, push and release.

Only store one pair of sunglasses in the holder.

⚠WARNING

Keep the sunglasses holder closed while driving to prevent an accident.

⚠ CAUTION

- **Do not use for anything other than sunglasses.**
- **Do not leave sunglasses in the sunglasses holder while parking in direct sunlight. The heat may damage the sunglasses.**

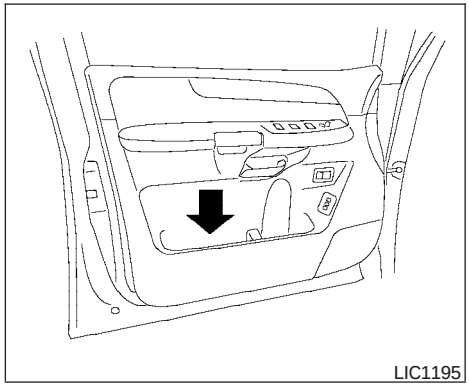

MAP POCKETS

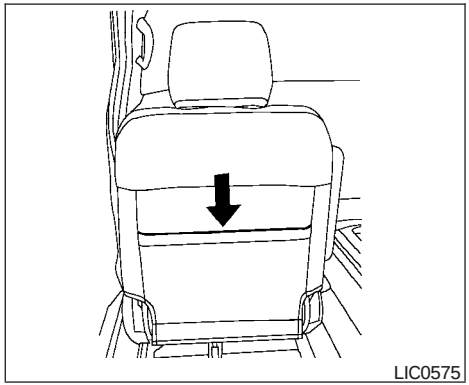

SEATBACK POCKET

The seatback pocket is located on the back of the driver seat. The pocket can be used to store maps.

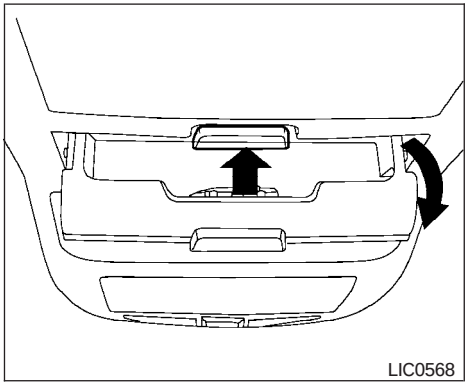

Small bin

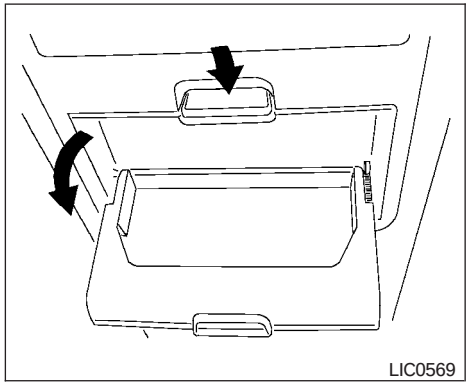

Medium bin

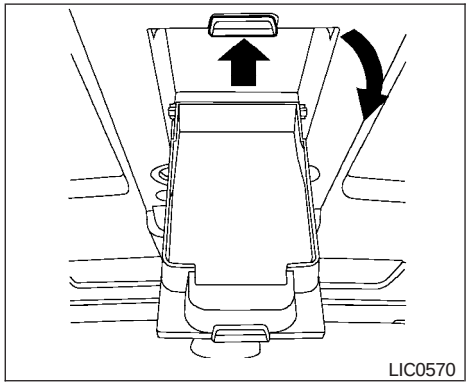

Large bin

OVERHEAD CONSOLE

Storage bins

⚠ WARNING

Keep storage bins closed while driving to help prevent injury in an accident or a sudden stop.

Push the button to open a storage bin.

Push the lid up to close.

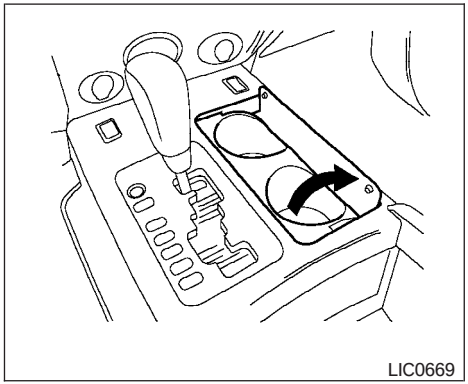

Front

CUP HOLDERS

To open the front cup holders, push the cup holder lid.

To close, lower the cup holder lid and push down until it clicks in place.

⚠ CAUTION

- **Avoid abrupt starting and braking when the cup holder is being used to prevent spilling the drink. If the liquid is hot, it can scald you or your passenger.**
- **Use only soft cups in the cup holder. Hard objects can injure you in an accident.**

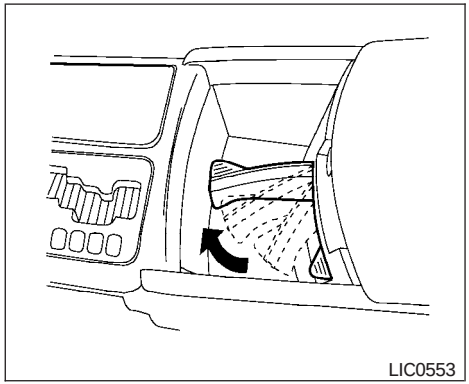

Adjustable

Position the arm on the adjustable cup holder so that the cup is held securely.

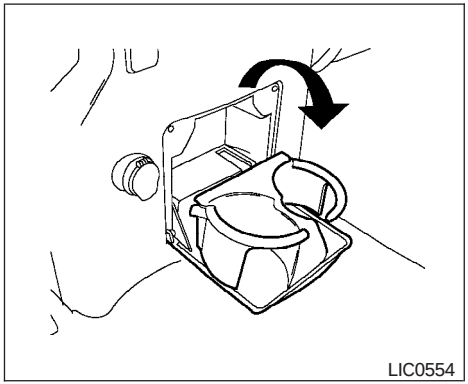

2nd row (rear of front console)

To open the 2nd row cup holders (rear of the front console), lower the lid. To close, raise the lid.

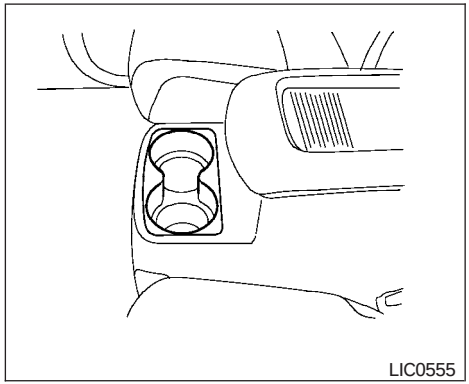

Rear console (if so equipped)

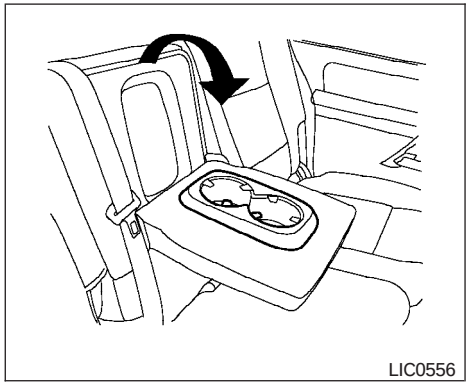

2nd row bench (if so equipped)

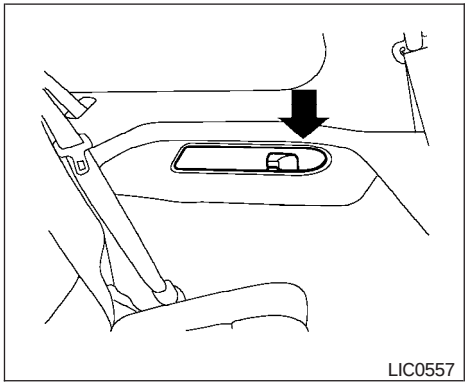

3rd row

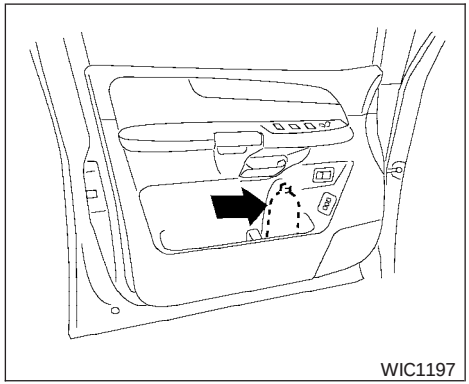

Bottle holder

⚠ CAUTION

- **Do not use bottle holder for any other objects that could be thrown about in the vehicle and possibly injure people during sudden braking or an accident.**
- **Do not use bottle holder for open liquid containers.**

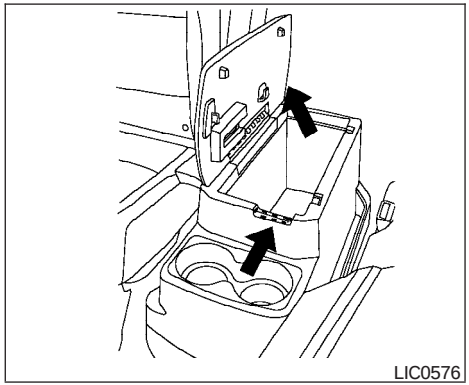

2ND ROW CENTER CONSOLE (if so equipped)

Pull up on the lever to open the console box lid.

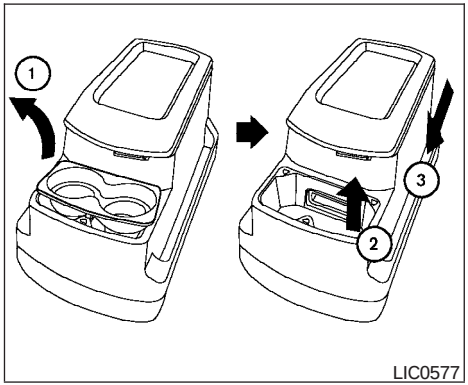

Removing the 2nd row center console box

To remove the 2nd row center console box:

① Lift out the cup holder tray.

② Pull up on the handle to tilt the console box up.

③ Move the console box toward the front of the vehicle and lift it out.

To reinstall the 2nd row center console box:

1. Slide the console box over the base toward the rear of the vehicle.
2. Push down to lock the console box in place.
3. Replace the cup holder tray.

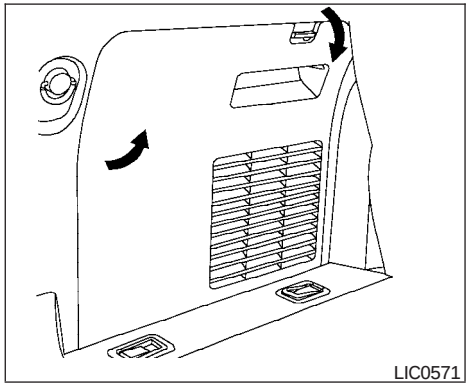

CARGO AREA STORAGE BIN

To open the cargo area storage bin, pull down on the tab and pull the lid off.

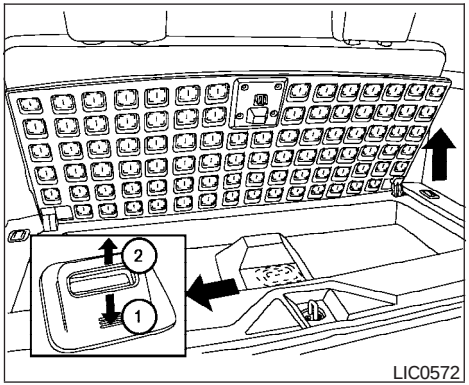

To access the floor storage area, push down ① to raise the handle, then pull up on the handle ② to lift the luggage board.

LUGGAGE HOOKS

The luggage hooks can be used to secure cargo with ropes or other types of straps.

⚠ WARNING

- **Properly secure all cargo with ropes or straps to help prevent it from sliding or shifting. Do not place cargo higher than the seatbacks. In a sudden stop or collision, unsecured cargo could cause personal injury.**
- **Use suitable ropes and hooks to secure cargo.**
- **Never allow anyone to ride in the luggage area. It is extremely dangerous to ride in a cargo area inside of a vehicle. In a collision, people riding in these areas are more likely to be seriously injured or killed.**
- **Do not allow people to ride in any area of your vehicle that is not equipped with seats and seat belts.**
- **The child restraint top tether strap may be damaged by contact with items in the cargo area. Secure any items in the cargo area. Your child could be seriously injured or killed in a collision if the top tether strap is damaged.**
- **Be sure everyone in your vehicle is in a seat and using a seat belt properly.**

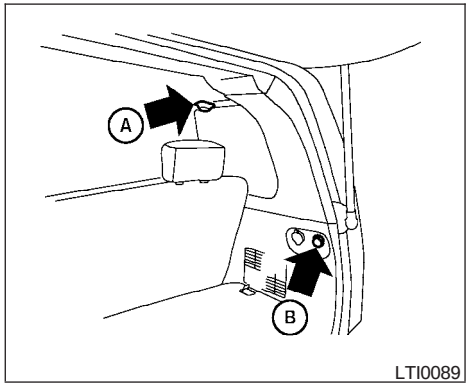

Side finisher

When hooking on ropes, do not apply a load of more than 55 lb (245 N) to a single Ⓐ hook or 44 lb (196 N) to a single Ⓑ hook.

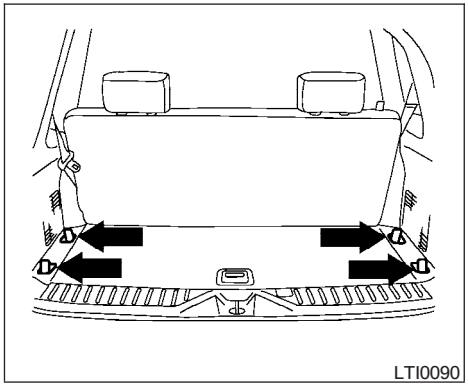

Floor hooks

Do not apply a load of more than 110 lb (490 N) to a single hook.

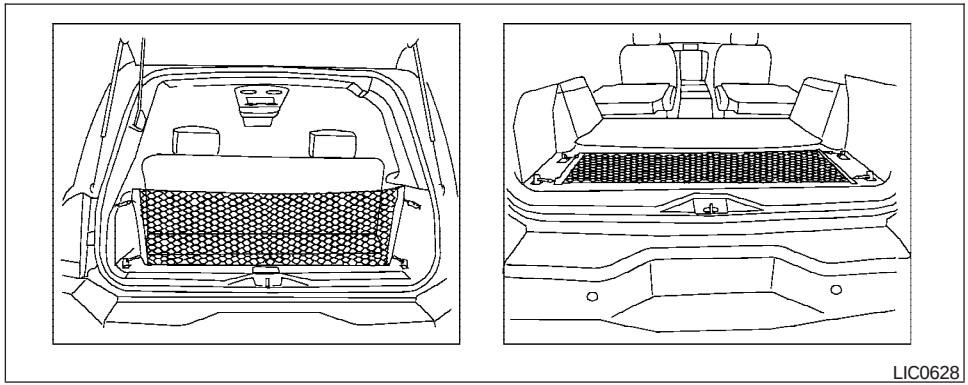

CARGO NET

The cargo net helps keep packages in the cargo area from moving around while the vehicle is in motion.

To install the cargo net, attach the hooks to the retainers.

To remove the cargo net, detach the hooks from the cargo net retainers.

⚠ WARNING

- **Properly secure all cargo to help prevent it from sliding or shifting. Do not place cargo higher than the seatbacks. In a sudden stop or collision, unsecured cargo could cause personal injury.**
- **Be sure to secure all four hooks into the retainers. The cargo restrained in the net must not exceed 30 lbs. (13.6 kg) or the net may not stay secured.**

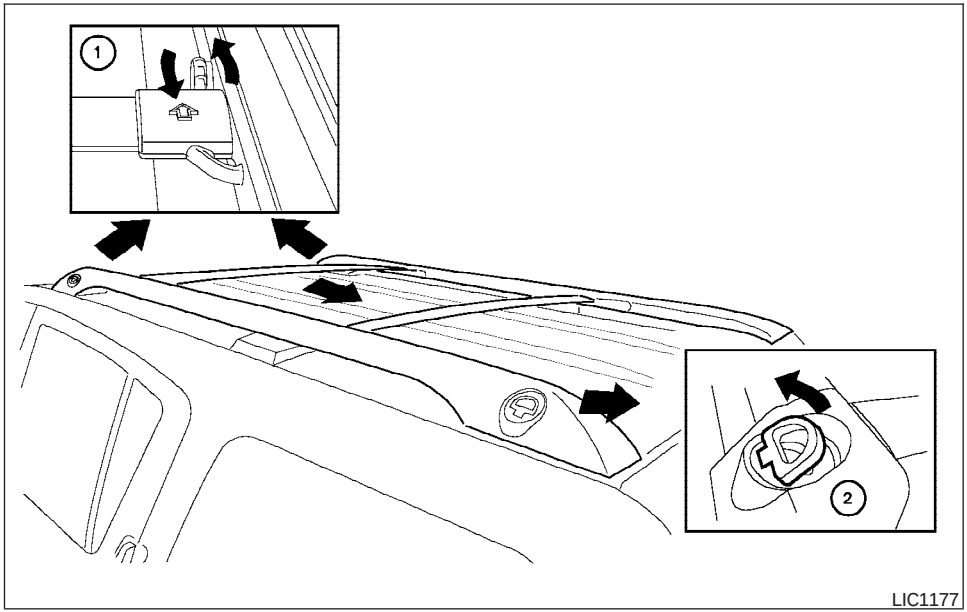

ROOF RACK

⚠ WARNING

- **Drive extra carefully when the vehicle is loaded at or near the cargo carrying capacity, especially if the significant portion of that load is carried on the roof rack.**
- **Heavy loading of the roof rack has the potential to affect the vehicle stability and handling during sudden or abnormal handling maneuvers.**
- **Roof rack load should be evenly distributed.**
- **Do not exceed maximum roof rack load weight capacity.**
- **Properly secure all cargo with ropes or straps to help prevent it from sliding or shifting. In a sudden stop or collision, unsecured cargo could cause personal injury.**

⚠ CAUTION

Use care when placing or removing items from the roof rack. If you cannot comfortably lift the items onto the roof rack from the ground, use a ladder or stool.

Always distribute the luggage evenly on the roof rack. Do not load more than 200 lbs (91 kg) on entire roof rack. Be sure load is evenly distributed across both crossbars. Be careful that your vehicle does not exceed the Gross Vehicle Weight Rating (GVWR) or its Gross Axle Weight Rating (GAWR front and rear). The GVWR and GAWR are located on the F.M.V.S.S. label (located on the driver's door pillar). For more information regarding GVWR and GAWR, refer to "Vehicle loading information" in the "Technical and consumer information" section later in this manual.

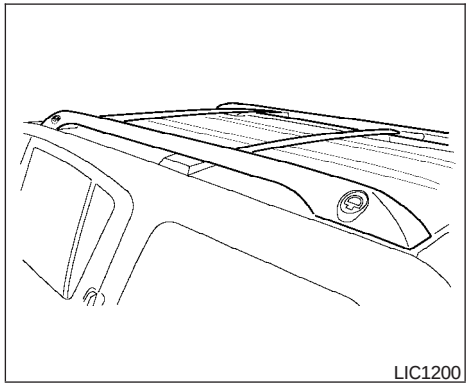

The crossbars can be adjusted forward and backward. Loosen the thumbwheel ① and adjust the crossbar to the desired position. Tighten the thumbwheel. Place your luggage on the bars and secure the luggage with rope to the utility loops ②. Do not place luggage on the side rails or tie rope directly to the side rails. Always be sure the thumbwheels are fully tightened to keep the crossbar in place. Do not use utility loops for any purpose other than securing luggage.

POWER WINDOWS

⚠WARNING

- **Make sure that all passengers have their hands, etc. inside the vehicle while it is in motion and before closing the windows. Use the window lock switch to prevent unexpected use of the power windows.**
- **Do not leave children unattended inside the vehicle. They could unknowingly activate switches or controls and become trapped in a window. Unattended children could become involved in serious accidents.**

The power windows operate when the ignition switch is in the ON position, or for about 45 seconds after the ignition switch is turned to the OFF position. If the driver's or passenger's door is opened during this period of about 45 seconds, power to the windows is canceled.

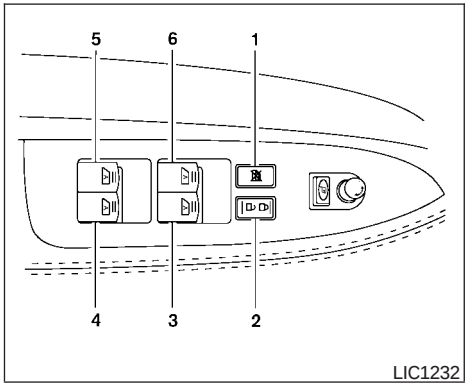

1. Window lock button
2. Power door lock switch
3. Front passenger side automatic switch
4. Right rear passenger window automatic switch
5. Left rear passenger window automatic switch
6. Driver side automatic switch

Driver's side power window switch

The driver's side control panel is equipped with switches to open or close the front and rear passenger windows.

To open a window, push the switch and hold it down. To close a window, pull the switch and hold it up. To stop the opening or closing function at any time, simply release the switch.

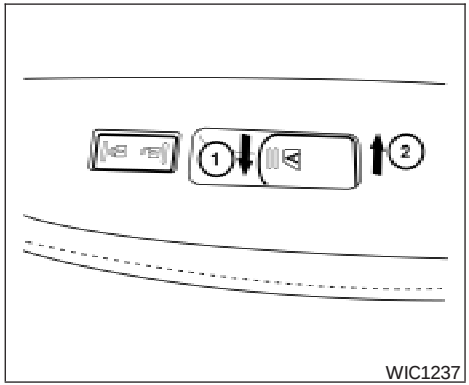

Front passenger's power window switch

The passenger's window switch operates only the corresponding passenger's window. To open the window, push the switch and hold it down ①. To close the window, pull the switch up ②.

Locking passenger's windows

When the window lock button is depressed, only the driver's side window can be opened or closed. Push it again to cancel the window lock function.

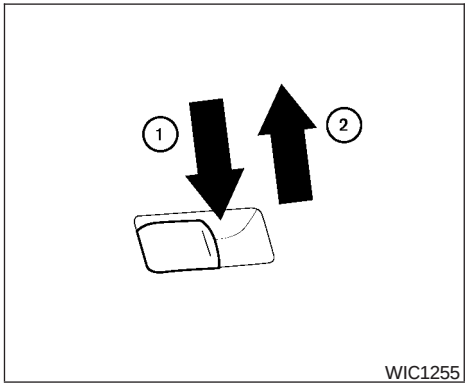

Rear power window switch

The rear power window switches open or close only the corresponding windows. To open the window, push the switch and hold it down ①. To close the window, pull the switch up ②.

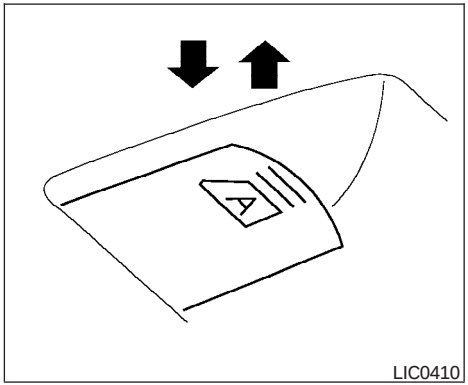

Automatic operation

To fully open a window equipped with automatic operation, press the window switch down (only driver's side shown) to the second detent and release it; it need not be held. The window automatically opens all the way. To stop the window, lift the switch up while the window is opening.

To fully close a window equipped with automatic operation, pull the switch up to the second detent and release it; it need not be held. To stop the window, press the switch down while the window is closing.

Auto-reverse function

The auto-reverse function can be activated when a window is closed by automatic operation.

Depending on the environment or driving conditions, the auto-reverse function may be activated if an impact or load similar to something being caught in the window occurs.

⚠ WARNING

There are some small distances immediately before the closed position which cannot be detected. Make sure that all passengers have their hands, etc., inside the vehicle before closing the window.

If the control unit detects something caught in a window equipped with automatic operation as it is closing, the window will be immediately lowered.

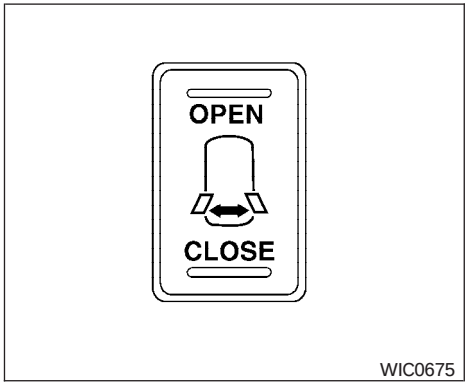

Type A

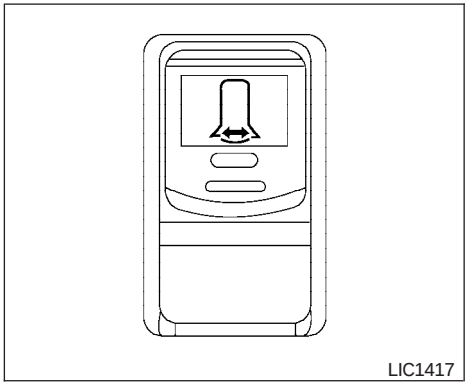

Type B

POWER VENT WINDOWS

Use the vent window switch located on the driver's side of the instrument panel to open and close the power vent windows. The windows cannot be operated separately.

To open the power vent windows, press and hold the switch in the OPEN position (Type A) or press and hold the switch (Type B).

To close the windows, press and hold down the switch in the CLOSE position (Type A) or pull up and hold the switch (Type B).

The power vent windows operate when the ignition key is in the ON position, or for about 45 seconds after the ignition key is turned to the OFF position. If the driver's or passenger's door is opened during this 45 second period, power to the vent windows is cancelled.

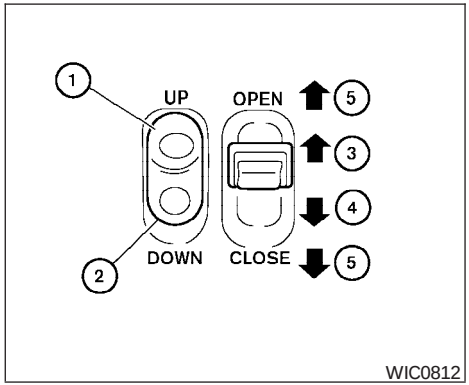

AUTOMATIC MOONROOF

The moonroof will only operate when the ignition switch is in the ON position. The automatic moonroof is operational for about 45 seconds, even if the ignition switch is turned to the ACC or OFF position. If the driver's door or the front passenger's door is opened during this period of about 45 seconds, power to the moonroof is canceled.

Sliding the moonroof

To fully open the moonroof, push the switch toward the open position ③.

To fully close the moonroof, push the switch toward the close position ④.

To open or close the moonroof part way, push the switch in any direction ⑤ while the moonroof is sliding open or closed to stop it in the desired position.

Tilting the moonroof

To tilt the moonroof up, push the tilt switch toward the up position ①. When the moonroof is open, it will automatically close and then tilt up.

To tilt the moonroof down, push the tilt switch toward the down position ②.

Restarting the moonroof sliding switch

The sliding switch will become inoperable after the battery terminal is disconnected, the electrical supply interrupted and/or some abnormality detected. Use the following reset procedure to return moonroof operation to normal.

1. If the moonroof lid is open, push the tilting switch repeatedly toward the down position ② to fully close the lid.
2. Push and hold the tilting switch for more than 2 seconds toward the down position ② to reestablish the lid's home position.

   The moonroof should now operate normally.

Auto reverse function (when closing or tilting down the moonroof)

The auto reverse function can be activated when the moonroof is closed or tilted down by automatic operation when the ignition key is in the ON position or for about 45 seconds after the ignition key is turned to the OFF position.

Depending on the environment or driving conditions, the auto reverse function may be activated if an impact or load similar to something being caught in the moonroof occurs.

⚠ WARNING

There are some small distances immediately before the closed position which cannot be detected. Make sure that all passengers have their hands, etc., inside the vehicle before closing the moonroof.

When closing:

If the control unit detects something caught in the moonroof as it moves to the front, the moonroof will immediately open backward.

When tilting down:

If the control unit detects something caught in the moonroof as it tilts down, the moonroof will immediately tilt up.

If the auto reverse function malfunctions and repeats opening or tilting up the moonroof, keep pushing the tilt down switch within 5 seconds after it happens; the moonroof will fully close gradually. Make sure nothing is caught in the moonroof.

⚠ WARNING

- **In an accident you could be thrown from the vehicle through an open moonroof. Always use seat belts and child restraints.**
- **Do not allow anyone to stand up or extend any portion of their body out of the moonroof opening while the vehicle is in motion or while the moonroof is closing.**

⚠ CAUTION

- **Remove water drops, snow, ice or sand from the moonroof before opening.**
- **Do not place heavy objects on the moonroof or surrounding area.**

Sunshade

Open and close the sunshade by sliding it forward or backward.

If the moonroof does not close

Have your INFINITI dealer check and repair the moonroof.

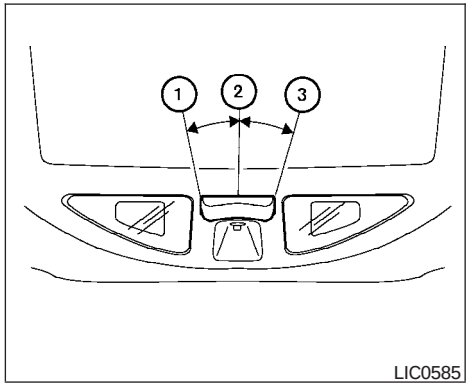

The interior light has a three-position switch and operates regardless of ignition switch position.

When the switch is in the ON position ①, the interior lights illuminate, regardless of door position. The lights will go off after about 30 minutes unless the ignition switch is in the ACC or ON position.

When the switch is in the DOOR position ②, the interior lights and puddle lights will stay on for about 30 seconds when:

- The doors are unlocked by the keyfob, a key or the power door lock switch while all doors are closed and the ignition switch is in the OFF position.
- The driver's door is opened and then closed while the key is removed from the ignition switch.
- The key is removed from the ignition switch while all doors are closed.

The lights will turn off while the 30-second timer is activated when:

- The driver's door is locked by the keyfob, a key, or the power door lock switch.
- The ignition switch is turned ON.

When the switch is in the OFF position ③, the interior lights do not illuminate, regardless of door position. The puddle lights come on when any front or rear passenger door is opened.

The lights will turn off automatically after 30 minutes while doors are open to prevent the battery from becoming discharged.

NOTE:

The footwell and door step lights illuminate when the driver and passenger doors are open regardless of the interior light switch position. These lights will turn off automatically after about 30 minutes while doors are open to prevent the battery from becoming discharged.

⚠ CAUTION

Do not use for extended periods of time with the engine stopped. This could result in a discharged battery.

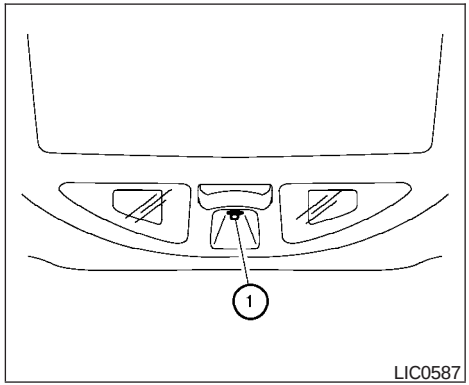

CONSOLE LIGHT

The console light ① will turn on whenever the parking lights or headlights are illuminated.

The console light brightness can be adjusted with the illumination brightness control.

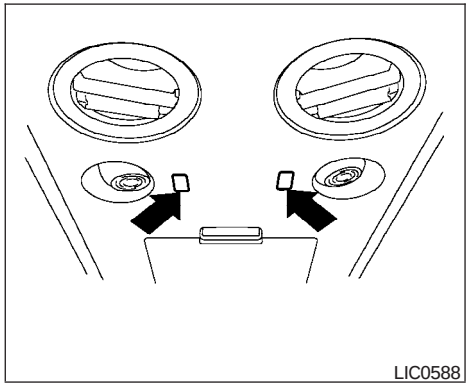

The personal lights on the overhead console can be swiveled 360 degrees. To turn on the light, press the button. Press the button again to turn off the light.

MAP LIGHTS

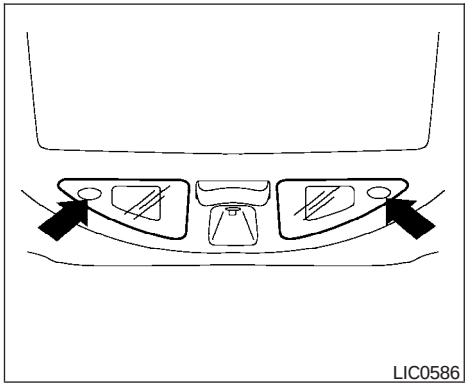

To turn the map lights on, press the switches. To turn them off, press the switches again.

⚠ CAUTION

Do not use for extended periods of time with the engine stopped. This could result in a discharged battery.

CARGO LIGHT

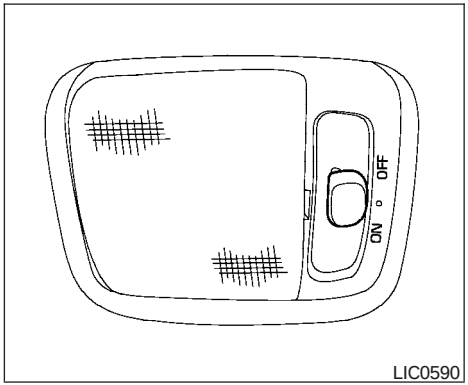

The cargo light on the overhead trim has a three-position switch. To operate, push the switch to the desired position.

ON: The light is illuminated.

Normal (center) position: The light illuminates when the lift gate or glass hatch is opened. The light turns off when the lift gate or glass hatch is closed.

OFF: The light does not illuminate regardless of lift gate position or lock status.

HOMELINK® UNIVERSAL TRANSCEIVER

The HomeLink® Universal Transceiver provides a convenient way to consolidate the functions of up to three individual hand-held transmitters into one built-in device.

HomeLink® Universal Transceiver:

- Will operate most Radio Frequency (RF) devices such as garage doors, gates, home and office lighting, entry door locks and security systems.
- Is powered by your vehicle's battery. No separate batteries are required. If the vehicle's battery is discharged or is disconnected, HomeLink® will retain all programming.

Once the HomeLink® Universal Transceiver is programmed, retain the original transmitter for future programming procedures (Example: new vehicle purchases). Upon sale of the vehicle, the programmed HomeLink® Universal Transceiver buttons should be erased for security purposes. For additional information refer to "Programming HomeLink®" later in this section.

⚠ WARNING

- **Do not use the HomeLink® Universal Transceiver with any garage door opener that lacks safety stop and reverse features as required by federal safety standards. (These standards became effective for opener models manufactured after April 1, 1982). A garage door opener which cannot detect an object in the path of a closing garage door and then automatically stop and reverse, does not meet current federal safety standards. Using a garage door opener without these features increases the risk of serious injury or death.**
- **During the programming procedure your garage door or security gate will open and close (if the transmitter is within range). Make sure that people or objects are clear of the garage door, gate, etc. that you are programming.**
- **Your vehicle's engine should be turned off while programming the HomeLink® Universal Transceiver.**

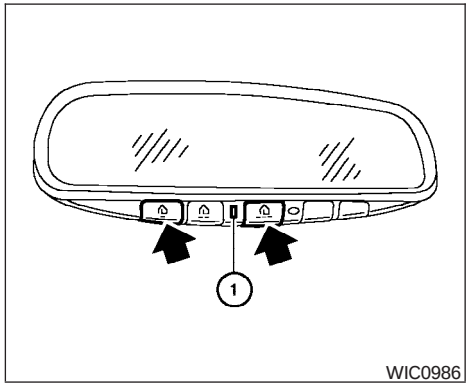

WIC0986

PROGRAMMING HOMELINK®

1. To begin, press and hold the two outer HomeLink® buttons (to clear the memory) until the indicator light ① blinks (after 20 seconds). Release both buttons.
2. Position the end of the hand-held transmitter 1 - 3 inches (26 - 76 mm) away from the HomeLink® surface.

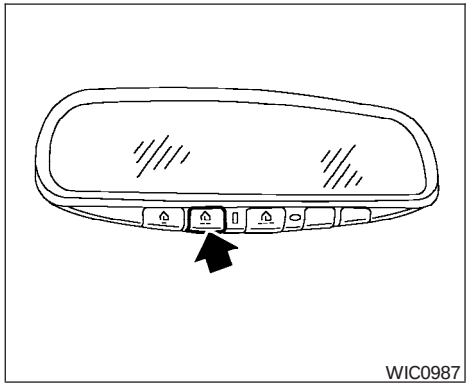
WIC0987

3. Using both hands, simultaneously press and hold both the HomeLink® button you want to program and the hand-held transmitter button.

   DO NOT release the buttons until step 4 has been completed.

4. Hold down both buttons until the indicator light on the HomeLink® flashes, changing from a “slow blink” to a “rapidly flashing blink”. This could take up to 90 seconds. When the indicator light flashes rapidly, both buttons may be released. The rapidly flashing light indicates successful programming. To activate the garage door or other programmed device, press and hold the programmed HomeLink® button — releasing when the device begins to activate.
5. If the indicator light on the HomeLink® blinks rapidly for 2 seconds and then turns solid, HomeLink® has picked up a “rolling code” garage door opener signal. You will need to proceed with the next steps to train the HomeLink® to complete the programming which may require a ladder and another person for convenience.
6. Press and release the “smart” or “learn” program button located on the garage door opener’s motor to activate the “training mode”. This button is usually located near the antenna wire that hangs down from the motor. If the wire originates from under a light lens, you will need to remove the lens to access the program button.

NOTE:

Once you have pressed and released the program button on the garage door opener’s motor and the “training light” is lit, you have 30 seconds in which to perform step 7. Use the help of a second person for convenience to assist when performing this step.

7. Within 30 seconds of pressing and releasing the garage door opener program button, quickly and firmly press and release the HomeLink® button you’ve just programmed. Press and release the HomeLink® button up to 3 times to complete the training.
8. Your HomeLink® button should now be programmed. (To program the remaining HomeLink® buttons for additional door or gate openers, follow steps 2-4 only.)

NOTE:

Do not repeat step 1 unless you want to “clear” all previously programmed HomeLink® buttons.

If you have any questions or are having difficulty programming your HomeLink® buttons, refer to the HomeLink® web site at: www.homelink.com or call 1-800-355-3515.

PROGRAMMING HOMELINK® FOR CANADIAN CUSTOMERS

Prior to 1992, D.O.C. regulations required hand-held transmitters to stop transmitting after 2 seconds. To program your hand-held transmitter to HomeLink®, continue to press and hold the HomeLink® button (see steps 2 - 4 under “Programming HomeLink®”) while you press and re-press (“cycle”) your hand-held transmitters every 2 seconds until the indicator light flashes rapidly (indicating successful programming).

NOTE:

When programming a garage door opener, etc., it is advised to unplug the device during the “cycling” process to prevent possible damage to the garage door opener components.

OPERATING THE HOMELINK® UNIVERSAL TRANSCEIVER

The HomeLink® Universal Transceiver (once programmed) may now be used to activate the garage door, etc. To operate, simply press the appropriate programmed HomeLink® Universal Transceiver button. The red indicator light will illuminate while the signal is being transmitted.

PROGRAMMING TROUBLE-DIAGNOSIS

If the HomeLink® does not quickly learn the hand-held transmitter information:

- replace the hand-held transmitter batteries with new batteries.
- position the hand-held transmitter with its battery area facing away from the HomeLink® surface.
- press and hold both the HomeLink® and hand-held transmitter buttons without interruption.
- position the hand-held transmitter 1 - 3 inches (26 - 76 mm) away from the HomeLink® surface. Hold the transmitter in that position for up to 15 seconds. If HomeLink® is not programmed within that time, try holding the transmitter in another position – keeping the indicator light in view at all times.

If you continue to have programming difficulties, please contact the INFINITI Consumer Affairs Department. The phone numbers are located in the Foreword of this manual.

CLEARING THE PROGRAMMED INFORMATION

Individual buttons cannot be cleared. However, to clear all programming, press and hold the two outside buttons and release when the indicator light begins to flash (approximately 20 seconds).

REPROGRAMMING A SINGLE HOMELINK® BUTTON

To reprogram a HomeLink® Universal Transceiver button, complete the following.

1. Press and hold the desired HomeLink® button. **Do not** release the button until step 4 has been completed.
2. When the indicator light begins to flash slowly (after 20 seconds), position the hand-held transmitter 1 - 3 inches (26 - 76 mm) away from the HomeLink® surface.
3. Press and hold the hand-held transmitter button.
4. The HomeLink® indicator light will flash, first slowly and then rapidly. When the indicator light begins to flash rapidly, release both buttons.

The HomeLink® Universal Transceiver button has now been reprogrammed. The new device can be activated by pushing the HomeLink® button that was just programmed. This procedure will not affect any other programmed HomeLink® buttons.

IF YOUR VEHICLE IS STOLEN

If your vehicle is stolen, you should change the codes of any non-rolling code device that has been programmed into HomeLink®. Consult the Owner's Manual of each device or call the manufacturer or dealer of those devices for additional information.

When your vehicle is recovered, you will need to reprogram the HomeLink® Universal Transceiver with your new transmitter information.

FCC Notice:

This device complies with FCC rules part 15 and RSS-210 of Industry Canada. Operation is subject to the following two conditions:

(1) This device may not cause harmful interference and (2) This device must accept any interference that may be received, including interference that may cause undesired operation.

This transmitter has been tested and complies with FCC and DOC/MDC rules. Changes or modifications not expressly approved by the party responsible for compliance could void the user's authority to operate the equipment.

DOC: ISTC 1763K1313

FCC I.D. CV2V67690

MEMO

3 Pre-driving checks and adjustments

Keys 3-2
Intelligent keys 3-2
INFINITI vehicle immobilizer system keys 3-3
Doors 3-3
Locking with key. 3-4
Locking with inside lock knob 3-4
Locking with power door lock switch 3-5
Vehicle speed sensing door lock mechanism 3-5
Child safety rear door lock. 3-6
Intelligent Key system 3-6
Operating range. 3-8
Door locks/unlocks precaution 3-8
Intelligent Key operation 3-9
How to use the remote keyless entry function 3-12
Warning signals 3-14
Troubleshooting guide 3-15
Hood 3-16
Lift gate 3-16
Operating the power lift gate. 3-17
Cancel switch. 3-19
Lift gate release 3-20
Glass hatch. 3-20
Fuel-filler door 3-21
Fuel-filler cap 3-21
Steering wheel 3-22
Tilt operation. 3-22
Entry/Exit function 3-23
Pedal position adjustment 3-23
Sun visors 3-23
Vanity mirrors 3-24
Mirrors 3-24
Automatic anti-glare rearview mirror 3-24
Outside mirrors 3-25
Automatic drive positioner 3-26
Memory storage function 3-27
Entry/exit function 3-28
System operation. 3-28

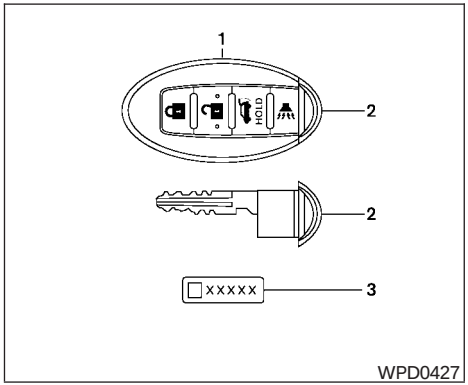

1. Two Intelligent Keys
2. Mechanical keys (inside Intelligent Keys)
3. Key number plate

INTELLIGENT KEYS

Your vehicle can only be driven with the Intelligent Keys which are registered to your vehicle's Intelligent Key system components and the INFINITI Vehicle Immobilizer System components.

Never leave these keys in the vehicle.

As many as 4 Intelligent Keys can be registered and used with 1 vehicle. The new keys must be registered by an INFINITI dealer prior to use with the Intelligent Key system and the INFINITI Vehicle Immobilizer System of your vehicle. Since the registration process requires erasing all memory in the Intelligent Key components when registering new keys, be sure to take all Intelligent Keys that you have to the INFINITI dealer.

⚠ CAUTION

- **Do not allow the Intelligent Key, which contains electrical components, to come into contact with water or salt water. This could affect the system function.**
- **Do not drop the Intelligent Key.**
- **Do not strike the Intelligent Key sharply against another object.**
- **Do not place the Intelligent Key for an extended period in an area where temperatures exceed 140°F (60°C).**
- **Do not attach the Intelligent Key with a key holder that contains a magnet.**
- **Do not place the Intelligent Key near equipment that produces a magnetic field, such as a TV, audio equipment and personal computers.**

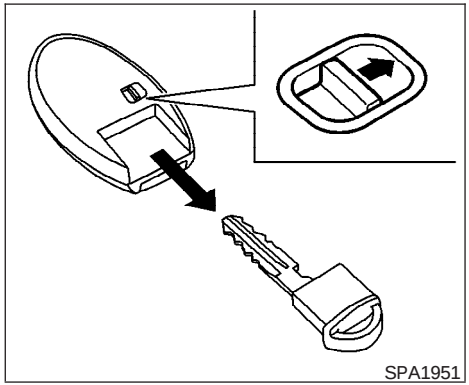

Mechanical key

The Intelligent Key contains the mechanical key, which can be used in case of a discharged battery.

To remove the mechanical key, release the lock knob on the back of the Intelligent Key.

To install the mechanical key, firmly insert it into the Intelligent Key until the lock knob returns to the lock position.

The mechanical key can be used for operation in the same way as an ordinary key.

⚠CAUTION

Always carry the mechanical key installed in the Intelligent Key slot.

Valet hand-off

When you have to leave a key with a valet, give them the Intelligent Key itself and keep the mechanical key with you to protect your belongings.

To prevent the glove box or console box from being opened during valet hand-off, follow the procedure below.

1. Remove the mechanical key from the Intelligent Key.
2. Lock the glove box or console box with the mechanical key.
3. Hand the Intelligent Key to the valet and keep the mechanical key with you.

See “Storage” in the “Instruments and controls” section.

INFINITI VEHICLE IMMOBILIZER SYSTEM KEYS

You can only drive your vehicle using the master or valet keys which are registered to the INFINITI Vehicle Immobilizer System components in your vehicle. These keys have a transponder chip in the key head.

The master key can be used for all the locks.

The valet key cannot be used for the console box lock.

To protect belongings when you leave a key with someone, give them the valet key only.

Never leave these keys in the vehicle.

Additional or replacement keys:

If you still have a key, the key number is not necessary when you need extra INFINITI Vehicle Immobilizer System keys. Your dealer can duplicate your existing key. As many as five INFINITI Vehicle Immobilizer System keys can be used with one vehicle. You should bring all INFINITI Vehicle Immobilizer System keys that you have to your INFINITI dealer for registration. This is because the registration process will erase the memory of all key codes previously registered into the INFINITI Vehicle Immobilizer System. After the registration process, these components will only recognize keys coded into the INFINITI Vehicle Immobilizer System during registration. Any key that is not given to your dealer at the time of registration will no longer be able to start your vehicle.

Do not allow the immobilizer system key, which contains an electrical transponder, to come into contact with salt water. This could affect system function.

⚠WARNING

- **Always have the doors locked while driving. Along with the use of seat belts, this provides greater safety in the event of an accident by helping to prevent persons from being thrown from the vehicle. This also helps keep children and others from unintentionally opening the doors, and will help keep out intruders.**
- **Before opening any door, always look for and avoid oncoming traffic.**
- **Do not leave children unattended inside the vehicle. They could unknowingly activate switches or controls. Unattended children could become involved in serious accidents.**

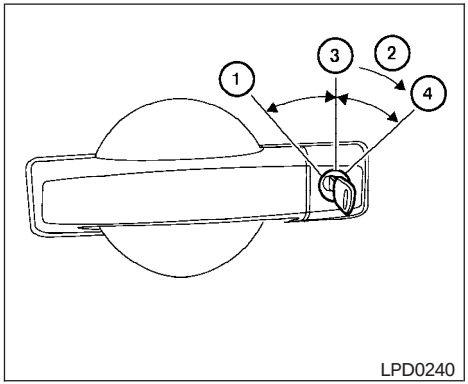

Driver's side

LOCKING WITH KEY

The power door lock system allows you to lock or unlock all doors at the same time.

Turning the key toward the front ① of the vehicle locks all doors.

Turning the key one time toward the rear ② of the vehicle unlocks that door. From that position, returning the key to neutral ③ (where the key can only be removed and inserted) and turning it toward the rear again within 5 seconds unlocks all doors ④.

Opening and closing windows

The driver's door key operation allows you to open and close windows equipped with automatic operation at the same time.

- To open the windows, turn the driver's door key toward the rear of the vehicle for **longer than 1 second** after the door is unlocked.
- To close the windows, turn the driver's door key to the front of the vehicle for **longer than 1 second** after the door is locked.

Windows stop when the key cylinder is released.

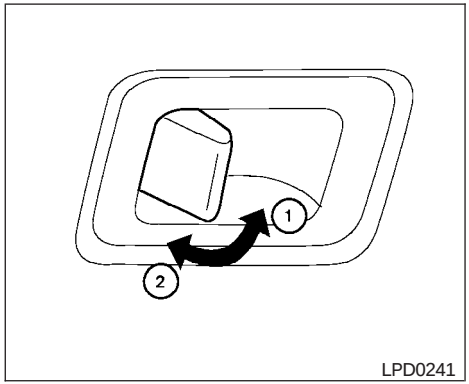

Inside lock

LOCKING WITH INSIDE LOCK KNOB

To lock the door without the key, move the inside lock knob to the lock position ①, then close the door.

To unlock the door without the key, move the inside lock knob to the unlock position ②.

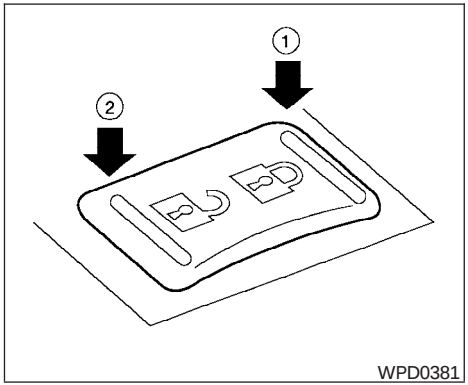

LOCKING WITH POWER DOOR LOCK SWITCH

To lock all the doors without a key, push the door lock switch (driver's or front passenger's side), to the lock position ①. When locking the door this way, be certain not to leave the key inside the vehicle.

To unlock all the doors without a key, push the door lock switch (driver's or front passenger's side) to the unlock position ②.

Lockout protection

When the power door lock switch (driver's or front passenger's side) is moved to the lock position with the key in the ignition and any door open, all doors will lock and then unlock automatically. This helps to prevent the keys from being accidently locked inside the vehicle.

VEHICLE SPEED SENSING DOOR LOCK MECHANISM

- All doors will be locked automatically when the vehicle speed reaches 15 MPH (24 km/h).
- All the doors will unlock automatically when the ignition switch is turned to the Off position.
- The lock and unlock mechanism work independently of each other:
  - Both the automatic lock and automatic unlock feature can be enabled.
  - The automatic lock feature can be enabled while the automatic unlock is disabled.
  - The automatic lock feature can be disabled while the automatic unlock is enabled.
  - Both the automatic lock and automatic unlock feature can be disabled.

How to enable and disable the lock feature

To activate or deactivate the vehicle speed sensing door lock mechanism, perform the following procedure.

1. Close all doors.
2. Turn the ignition switch to the ON position.
3. Within 20 seconds, push and hold the power door lock switch to the LOCK position for more than 5 seconds.
4. When activated, the hazard indicator will flash twice. When deactivated, the hazard indicator will flash once.

How to enable and disable the unlock feature

To activate or deactivate the automatic door unlock mechanism, perform the following procedure:

1. Close all doors.
2. Turn the ignition switch to the ON position.
3. Within 20 seconds, push and hold the power door lock switch to the UNLOCK position for more than 5 seconds.
4. When activated, the hazard indicator will flash twice. When deactivated, the hazard indicator will flash once.

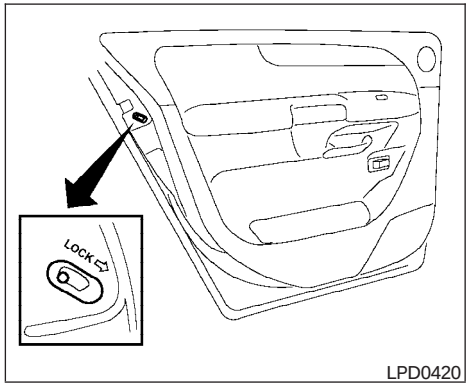

CHILD SAFETY REAR DOOR LOCK

Child safety locks help prevent the rear doors from being opened accidentally, especially when small children are in the vehicle.

The child safety lock levers are located on the edge of the rear doors.

When the lever is in the lock position, the door can be opened only from the outside.

⚠ WARNING

Radio waves could adversely affect electric medical equipment. Those who use a pacemaker should contact the electric medical equipment manufacturer for the possible influences before use.

The Intelligent Key system can operate all the door locks using the remote controller function or pushing the request switch on the vehicle without taking the key out from a pocket or purse. The operating environment and/or conditions may affect the Intelligent Key system operation.

Be sure to read the following before using the Intelligent Key system.

⚠ CAUTION

- **Be sure to carry the Intelligent Key with you when operating the vehicle.**
- **Never leave the Intelligent Key in the vehicle when you leave the vehicle.**

The Intelligent Key is always communicating with the vehicle as it receives radio waves. The Intelligent Key system transmits weak radio waves. Environmental conditions may interfere with the operation of the Intelligent Key system under the following operating conditions.

- When operating near a location where strong radio waves are transmitted, such as a TV tower, power station and broadcasting station.
- When in possession of wireless equipment, such as a cellular telephone, transceiver, and CB radio.
- When the Intelligent Key is in contact with or covered by metallic materials.
- When any type of radio wave remote control is used nearby.
- When the Intelligent Key is placed near an electric appliance such as a personal computer.
- When the vehicle is parked near a parking meter.

In such cases, correct the operating conditions before using the Intelligent Key function or use the mechanical key.

Although the life of the battery varies depending on the operating conditions, the battery's life is approximately 2 years. If the battery is discharged, replace it with a new one.

When the Intelligent Key battery is low, an indicator illuminates in the Vehicle Information Display. See "Vehicle Information Display" in the "Instrument Control" section.

Since the Intelligent Key is continuously receiving radio waves, if the key is left near equipment which transmits strong radio waves, such as signals from a TV and personal computer, the battery life may become shorter.

For information regarding replacement of a battery, see "Battery" in the "Maintenance and do-it-yourself" section.

Because the steering wheel is locked electrically, unlocking the steering wheel with the ignition switch in the LOCK position is impossible when the vehicle battery is completely discharged. Unlocking the steering wheel is impossible even if the Intelligent Key is inserted into the ignition cylinder. Pay special attention that the vehicle battery is not completely discharged.

As many as 4 Intelligent Keys can be registered and used with one vehicle. For information about the purchase and use of additional Intelligent Keys, contact an INFINITI dealer.

⚠ CAUTION

- **Do not allow the Intelligent Key, which contains electrical components, to come into contact with water or salt water. This could affect the system function.**
- **Do not drop the Intelligent Key.**
- **Do not strike the Intelligent Key sharply against another object.**
- **Do not change or modify the Intelligent Key.**
- **Wetting may damage the Intelligent Key. If the Intelligent Key gets wet, immediately wipe until it is completely dry.**
- **Do not place the Intelligent Key for an extended period in an area where temperatures exceed 140°F (60°C).**
- **Do not attach the Intelligent Key with a key holder that contains a magnet.**
- **Do not place the Intelligent Key near equipment that produces a magnetic field, such as a TV, audio equipment and personal computers.**

If an Intelligent Key is lost or stolen, INFINITI recommends erasing the ID code of that Intelligent Key from the vehicle. This may prevent the unauthorized use of the Intelligent Key to operate the vehicle. For information regarding the erasing procedure, contact an INFINITI dealer.

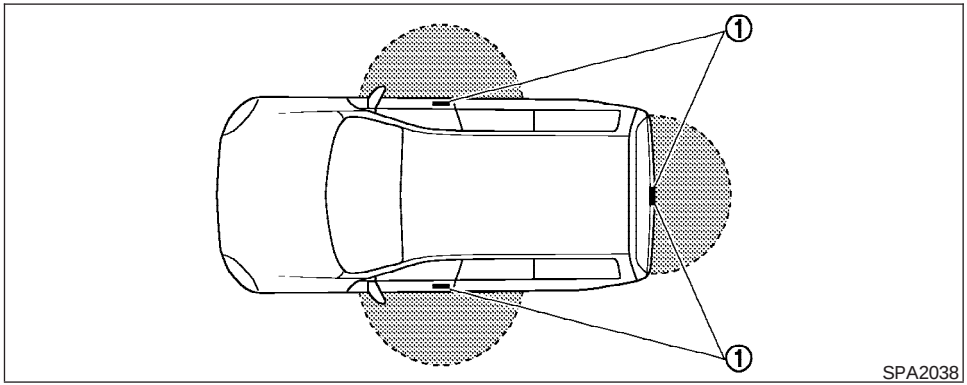

OPERATING RANGE

The Intelligent Key functions can only be used when the Intelligent Key is within the specified operating range from the request switch ①.

When the Intelligent Key battery is discharged or strong radio waves are present near the operating location, the Intelligent Key system's operating range becomes narrower, and the Intelligent Key may not function properly.

The operating range is within 31.50 in (80 cm) from each request switch ①.

If the Intelligent Key is too close to the door glass, handle or rear bumper, the request switches may not function.

When the Intelligent Key is within the operating range, it is possible for anyone, even someone who does not carry the Intelligent Key, to push the request switch to lock/unlock the doors.

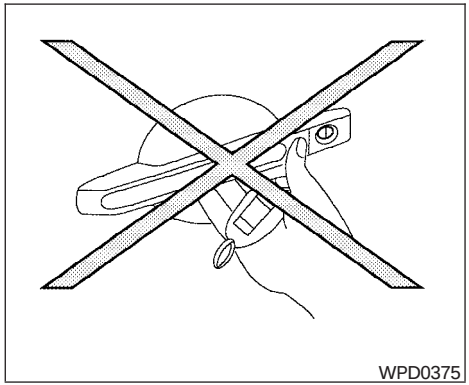

DOOR LOCKS/UNLOCKS PRECAUTION

- Do not push the door handle request switch with the Intelligent Key held in your hand as illustrated. The close distance to the door handle will cause the Intelligent Key system to have difficulty recognizing that the Intelligent Key is outside the vehicle.
- After locking with the door handle request switch, verify the doors are securely locked by testing them.
- To prevent the Intelligent Key from being left inside the vehicle, make sure you carry the key with you and then lock the doors.

- Do not pull the door handle before pushing the door handle request switch. The door will be unlocked but will not open. Release the door handle once and pull it again to open the door.

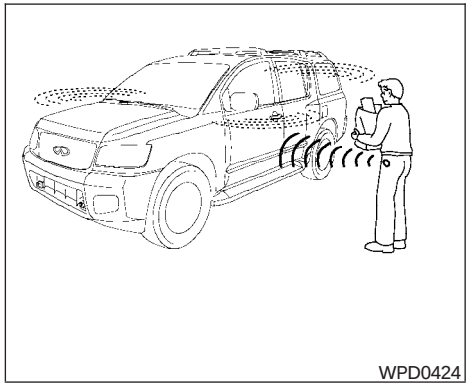
WPD0424

INTELLIGENT KEY OPERATION

You can lock or unlock the doors without taking the key out of your pocket or bag.

When you carry the Intelligent Key with you, you can lock or unlock all doors by pushing the door handle request switch within the range of operation.

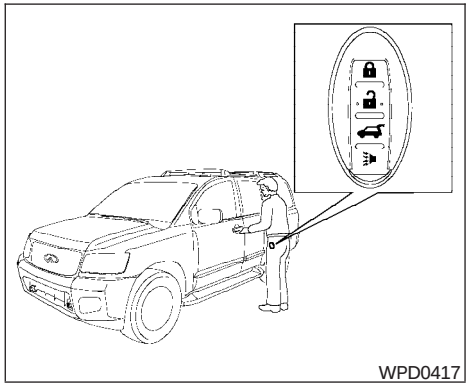
WPD0417

Locking doors

1. Move the selector to the P (Park) position, push the ignition switch to the LOCK position and make sure you carry the Intelligent Key with you.
2. Close all doors.
3. Push any door handle request switch while carrying the Intelligent Key with you.
4. All doors and the rear liftgate will lock.
5. The hazard warning lights flash twice and the outside buzzer sounds twice.

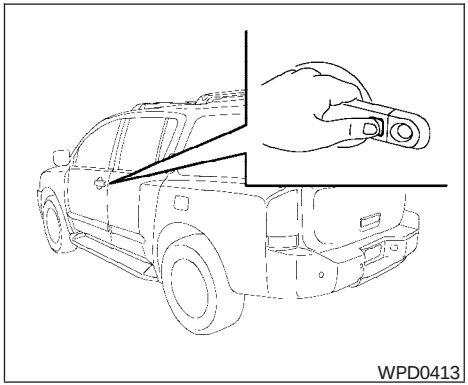

NOTE:

- Doors lock with the door handle request switch while the ignition switch is not in the LOCK position.
- Doors do not lock by pushing the door handle request switch while any door is open. However, doors lock with the mechanical key even if any door is open.
- Doors do not lock with the door handle request switch with the Intelligent Key inside the vehicle and a beep sounds to warn you. However, when an Intelligent Key is inside the vehicle, doors can be locked with another Intelligent Key.

⚠ CAUTION

- **After locking the doors using the request switch, make sure that the doors have been securely locked by operating the door handles or the rear liftgate opener switch.**
- **When locking the doors using the request switch, make sure to have the Intelligent Key in your possession before operating the request switch to prevent the Intelligent Key from being left in the vehicle.**
- **The request switch is operational only when the Intelligent Key has been detected by the Intelligent Key system.**

Lockout protection

To prevent the Intelligent Key from being accidentally locked in the vehicle, lockout protection is equipped with the Intelligent Key system.

When the driver's side door is open, the doors are locked, and then the Intelligent Key is put inside the vehicle and all the doors are closed; the lock will automatically unlock and the door buzzer sounds.

NOTE:

The doors may not lock when the Intelligent Key is in the same hand that is operating the request switch to lock the door. Put the intelligent key in a purse, pocket or your other hand.

⚠ CAUTION

The lockout protection may not function under the following conditions:

- **When the Intelligent Key is placed on top of the instrument panel.**
- **When the Intelligent Key is placed inside the glove box or a storage bin.**
- **When the Intelligent Key is placed inside the door pockets.**
- **When the Intelligent Key is placed inside or near metallic materials.**

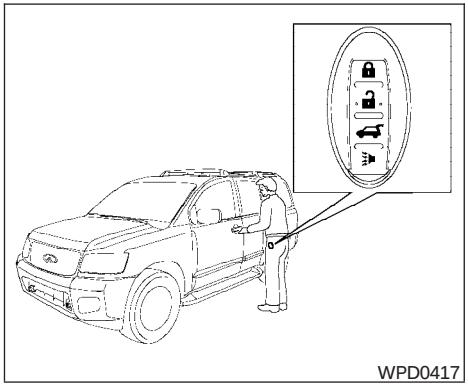

Unlocking doors

1. Carry the Intelligent Key.
2. Push the door handle request switch.
3. The hazard warning lights flash once and the outside buzzer sounds once.
4. Push the door handle request switch again within 30 seconds to unlock all doors.

For power lift gate opening:

1. Carry the intelligent key.
2. Push the power lift gate button.
3. The power lift gate will open.

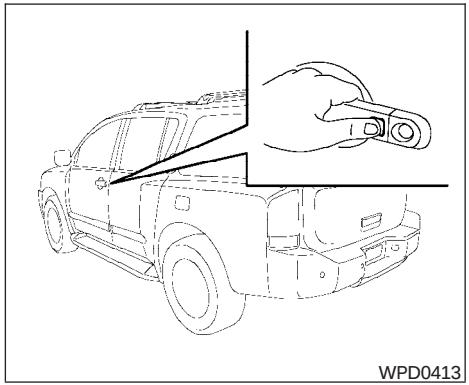

If a door handle is pulled while unlocking the doors, that door may not be unlocked. Returning the door handle to its original position will unlock the door. If the door does not unlock after returning the door handle, push the door handle request switch to unlock the door.

All doors will be locked automatically unless one of the following operations is performed within 1 minute after pushing the request switch.

- Opening any door.
- Pushing the ignition switch.

The interior light timer illuminates for 30 seconds when a door is unlocked and the room light switch is in the DOOR position.

The interior light can be turned off without waiting for 30 seconds by performing one of the following operations.

- Placing the ignition switch in the ON position.
- Locking the doors with the remote controller.
- Switching the room light switch to the OFF position.

HOW TO USE THE REMOTE KEYLESS ENTRY FUNCTION

The remote keyless entry function can operate all door locks using the remote keyless function of the Intelligent Key. The remote keyless function can operate at a distance of 33 ft (10 m) away from the vehicle. The operating distance depends upon the conditions around the vehicle.

The remote keyless entry function will not function under the following conditions:

- When the Intelligent Key is not within the operational range.
- When the doors or the rear liftgate are open or not closed securely.
- When the Intelligent Key battery is discharged.

⚠ CAUTION

When locking the doors using the Intelligent Key, be sure not to leave the key in the vehicle.

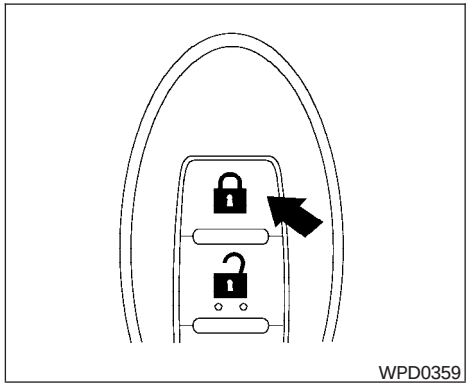

Locking doors

1. Place the ignition switch in the LOCK position.
2. Close all doors.
3. Push the button on the Intelligent Key.
4. The hazard warning lights flash twice and the horn beeps once.
5. All doors will be locked.

⚠ CAUTION

After locking the doors using the Intelligent Key, be sure that the doors have been securely locked by operating the door handles.

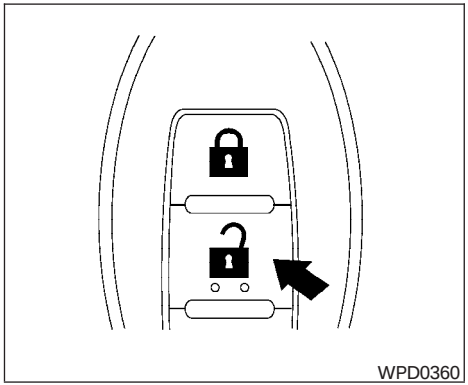

Unlocking doors

1. Push the button on the Intelligent Key.
2. The hazard warning lights flash once.
3. Push the button again within 5 seconds to unlock all doors.

All doors will be locked automatically unless one of the following operations is performed within 1 minute after pushing the button.

- Opening any doors.
- Pushing the ignition switch.

The interior light illuminates for 15 seconds when a door is unlocked and the room light switch is in the DOOR position.

The light can be turned off without waiting for 15 seconds by performing one of the following operations.

- Placing the ignition switch in the ON position.
- Locking the doors with the Intelligent Key.
- Switching the room light switch to the OFF position.

Opening windows

The Intelligent Key allows you to open windows equipped with automatic operation simultaneously.

- To open the windows, press the button on the Intelligent Key for **longer than 3 seconds** after all doors are unlocked.

The door windows will open while pressing the button on the Intelligent Key.

The door windows cannot be closed by using the Intelligent Key.

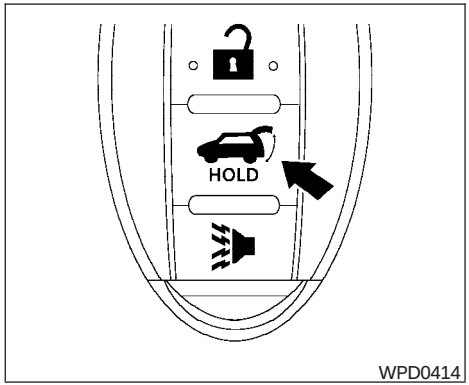

Releasing the rear lift gate

Push the button for longer than 0.5 second to open the rear lift gate. The rear lift gate release button will not operate when the ignition switch is in the ON position.

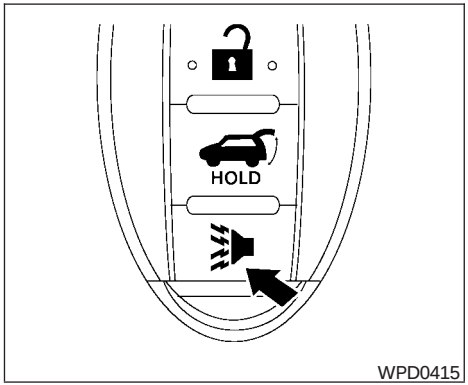

Using the panic alarm

If you are near your vehicle and feel threatened, you may activate the panic alarm to call attention by pushing and holding the button on the Intelligent Key for **longer than 0.5 second.**

The panic alarm and headlights will stay on for 25 seconds.

The panic alarm stops when:

- it has run for 25 seconds, or
- any button is pushed on the Intelligent Key.

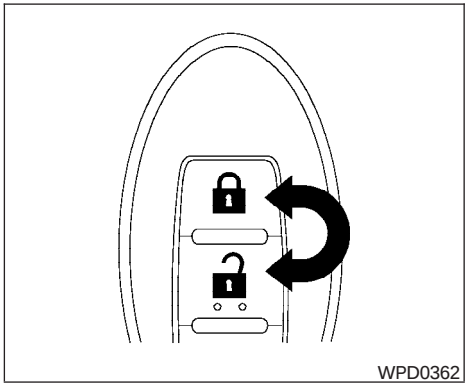

Silencing the horn beep feature

If desired, the horn beep feature can be deactivated using the Intelligent Key.

To deactivate: Press and hold the and buttons **for at least 2 seconds.**

The hazard warning lights will flash three times to confirm that the horn beep feature has been deactivated.

To activate: Press and hold the and buttons **for at least 2 seconds once more.**

The hazard warning lights will flash once and the horn will sound once to confirm that the horn beep feature has been reactivated.

Deactivating the horn beep feature does not silence the horn if the alarm is triggered.

WARNING SIGNALS

To help prevent the vehicle from moving unexpectedly by erroneous operation of the Intelligent Key or to help prevent the vehicle from being stolen, a chime or buzzer sounds from inside and outside the vehicle and a warning is displayed in the instrument panel.

When a chime or beep sounds or a warning is displayed, be sure to check the vehicle and the Intelligent Key.

See the troubleshooting guide that follows and “Vehicle information display indicator lights and warnings” in the “Instruments and controls” section.

TROUBLESHOOTING GUIDE

Verify the location of all Intelligent Keys that are programmed for the vehicle. If another Intelligent Key is in range or inside the vehicle, the vehicle system may respond differently than expected.

Symptom		Possible Cause	Remedy
When pushing the ignition switch to stop the engine	The SHIFT P warning appears on the display and the inside warning chime sounds continuously.	The shift selector lever is not in the P (Park) position.	Move the shift selector lever to the P (Park) position.
When opening the driver's door to get out of the vehicle	The inside warning chime sounds continuously.	The ignition switch is in the ACC position.	Push the ignition switch to the OFF position.
When closing the door after getting out of the vehicle	The NO KEY warning appears on the display, the outside chime sounds 3 times and the inside warning chime sounds for approximately 3 seconds.	The ignition switch is in the ACC or ON position.	Push the ignition switch to the OFF position.
	The NO KEY warning appears on the display and the outside chime sounds continuously.	The ignition switch is in the ACC position and the shift selector lever is not in the P (Park) position.	Move the shift selector lever to the P (Park) position and push the ignition switch to the OFF position.
When closing the door with the inside lock knob turned to LOCK	The outside chime sounds for approximately 3 seconds and all the doors unlock.	The Intelligent Key is inside the vehicle.	Carry the Intelligent Key with you.
When pushing the door handle request switch to lock the door	The outside chime sounds for approximately 2 seconds.	The Intelligent Key is inside the vehicle.	Carry the Intelligent Key with you.
		A door is not closed securely.	Close the door securely.
		The door handle request switch is pushed before the door is closed.	Push the door handle request switch after the door is closed.

HOOD

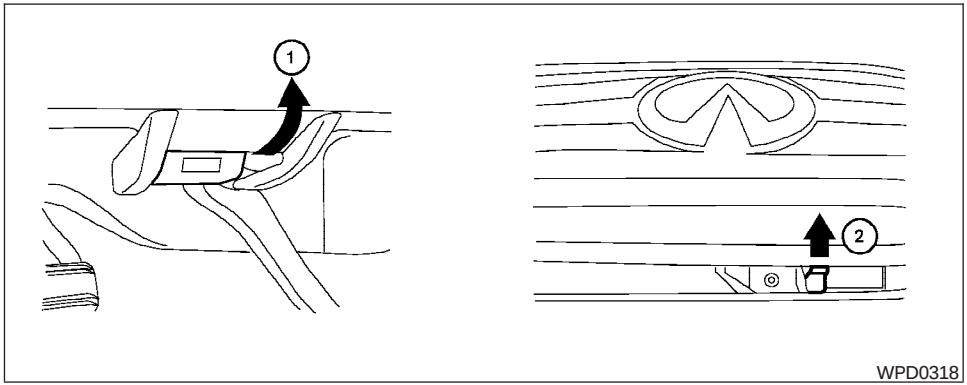

① Pull the hood lock release handle located below the driver side instrument panel. The hood will spring up slightly.

② Lift up the lever at the front of the hood as illustrated with your fingertips and raise the hood.

When closing the hood, lower it slowly and make sure it locks into place.

⚠ WARNING

- **Make sure the hood is completely closed and latched before driving. Failure to do so could cause the hood to fly open and result in an accident.**
- **If you see steam or smoke coming from the engine compartment, to avoid injury do not open the hood.**

LIFT GATE

⚠ WARNING

- **Always be sure the lift gate has been closed securely to prevent it from opening while driving.**
- **Do not drive with the lift gate open. This could allow dangerous exhaust gases to be drawn into the vehicle. See "Exhaust gas" in the "Starting and driving" section of this manual.**
- **Do not leave children unattended inside the vehicle. They could unknowingly activate switches or controls. Unattended children could become involved in serious accidents.**
- **Always be sure that hands and feet are clear of the door frame to avoid injury while closing the lift gate.**

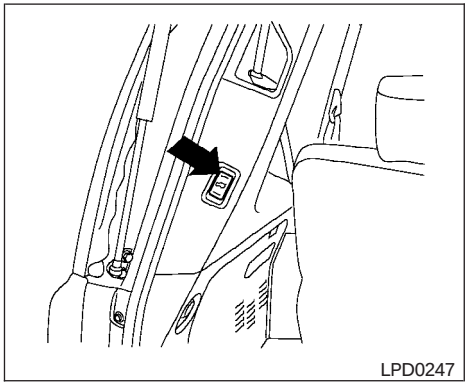

Rear pillar switch

OPERATING THE POWER LIFT GATE

NOTE:

To open, close or reverse the power lift gate, the shift selector lever must be in P (Park). Also, the power lift gate will not operate if battery voltage is low. Additionally, the glass hatch must be fully closed in order to open, close or reverse the power liftgate.

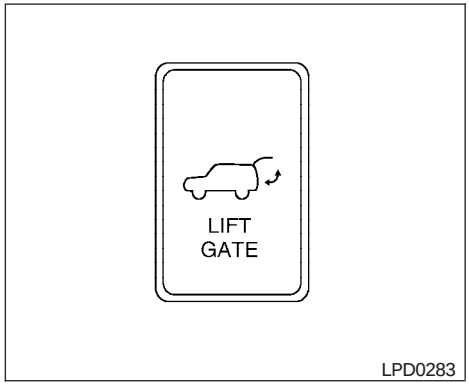

Instrument panel switch

Power Open:

The power lift gate automatically moves from the fully closed position to the fully open position in approximately 5 – 8 seconds. The power open feature can be activated by the switch on the keyfob, the instrument panel switch and by the outside opener handle. The hazard lights flash and a chime sounds to indicate the power open sequence has been started.

- The lift gate can be opened by the instrument panel switch and the keyfob even if the vehicle is locked. The lift gate will individually unlock and open. Once the lift gate is closed, its lock will align to the vehicle's lock or unlock status.
- The keyfob button must be held for 0.5 second before the lift gate opens.
- The lift gate must be unlocked to open it with the outside opener handle.
- The switch on the rear pillar cannot be used to open the lift gate.

A warning chime will sound if the shift selector lever is moved out of P (Park) during a power open operation.

Power Close:

The power lift gate automatically moves from the fully open position to the secondary position. When the lift gate reaches the secondary position, the cinching motor engages and pulls the lift gate to its primary latch position. Power close takes approximately 7 – 10 seconds. The power close feature can be activated by the switch on the keyfob, the instrument panel and the rear pillar. The hazard lights flash and a chime sounds to indicate the power close sequence has been started.

- If the outside opener handle is activated while the cinching motor is engaged, the cinching motor will disengage and release the latch.

- The keyfob button must be held for 0.5 second before the lift gate closes.
- The switch on the rear pillar can only be used to close the lift gate if the cancel switch is not in the on position.

Reverse:
The power lift gate will reverse direction immediately during power open or power close if the keyfob, instrument panel or rear pillar switch is pressed or if the outside handle is lifted. A chime will sound to announce the reversal.

Auto Reverse:
If an obstacle is detected during power open or power close, a warning chime will sound and the lift gate will reverse direction and return to the full open or full close position. If a second obstacle is detected, the lift gate motion will stop and the drive motor will disengage. The lift gate will enter manual mode.

A pinch strip is mounted on each side of the lift gate. If an obstacle is detected by a pinch strip during power close, the lift gate will reverse direction and return to the full open position.

NOTE:

If the pinch strip is damaged or removed, the power close function will not operate.

⚠ WARNING

There are some small distances immediately before the closed position which cannot be detected. Make sure that all passengers have their hands, etc., inside the vehicle before closing the lift gate.

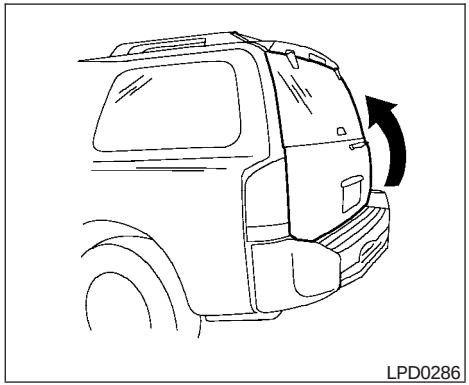
LPD0286

Manual Mode:
If power operation is not available, the lift gate may be operated manually. Power operation may not be available if the cancel switch is in the on position, if multiple obstacles have been detected in a single power cycle, or if battery voltage is low.

To open the lift gate manually, press up on the outside handle.

To close, lower and push the lift gate down securely.

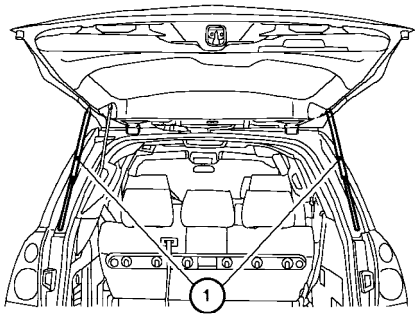

LPD0238

Safe Mode:

If the lift gate gas stays ① lose pressure, the power lift gate safe mode is activated. When the safe mode is activated, the lift gate slowly closes. A continuous warning chime sounds until the lift gate is in the fully down position. Then the lift gate will be pulled to the closed and latched position by a motor.

The power lift gate cannot be opened using the switches at any time in the safe mode.

The auto reverse function remains active while the lift gate is closing in the safe mode.

Do not operate the lift gate again until it is checked by your INFINITI dealer.

⚠ CAUTION

- **If the power lift gate does not stay open or if the lift gate unexpectedly closes at any time while a continuous warning chime sounds, do not operate the lift gate. There may be a pressure loss in one or both of the lift gate gas stays. Have the lift gate inspected by an INFINITI dealer.**
- **Do not activate the power lift gate if one or both of the lift gate gas stays are removed. Damage to the lift gate or power lift gate mechanisms may occur.**

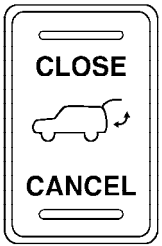

LPD0248

CANCEL SWITCH

Press the switch toward the CANCEL position to disable the rear pillar switch. The lift gate can still be opened and closed using the switch on the instrument panel and keyfob. The lift gate can also be opened manually with the outside handle if the lift gate is unlocked.

LIFT GATE RELEASE

WARNING

- **Always be sure the lift gate has been closed securely to prevent it from opening while driving.**
- **Do not drive with the lift gate open. This could allow dangerous exhaust gases to be drawn into the vehicle. See "Exhaust gas" in the "Starting and driving" section of this manual.**

CAUTION

- **If the power lift gate does not stay open or if the lift gate unexpectedly closes at any time while a continuous warning chime sounds, do not operate the lift gate. There may be a pressure loss in one or both of the lift gate gas stays. Have the lift gate inspected by an INFINITI dealer.**
- **Do not activate the power lift gate if one or both of the lift gate gas stays are removed. Damage to the lift gate or power lift gate mechanisms may occur.**

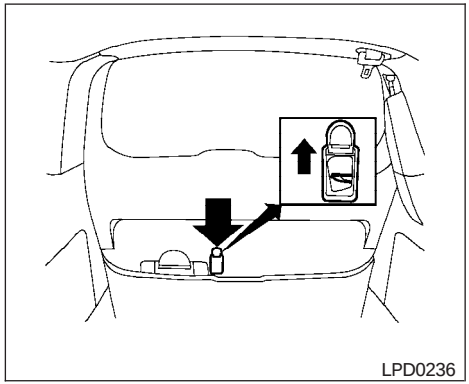

Power lift gate release

Power lift gate release

If the lift gate cannot be opened with the door lock switch or keyfob due to a discharged battery, follow these steps:

1. Remove the cover on the inside of the lift gate.
2. Move the lever up to open the lift gate.

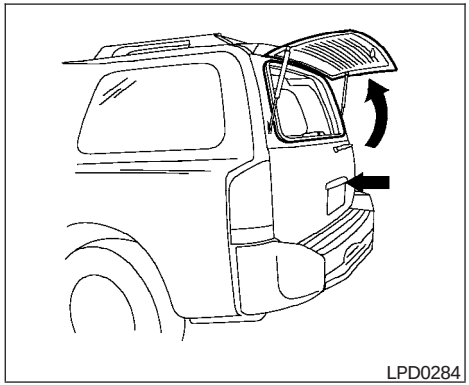

To open, push the button up on the smaller outside handle to release the glass hatch, then pull up on the glass hatch. To close, lower and push the glass hatch down securely.

NOTE:

The lift gate must be unlocked in order to open the glass hatch.

⚠ WARNING

Do not drive with the glass hatch open. This could allow dangerous exhaust gases to be drawn into the vehicle. See "Exhaust gas" in the "Starting and driving" section of this manual.

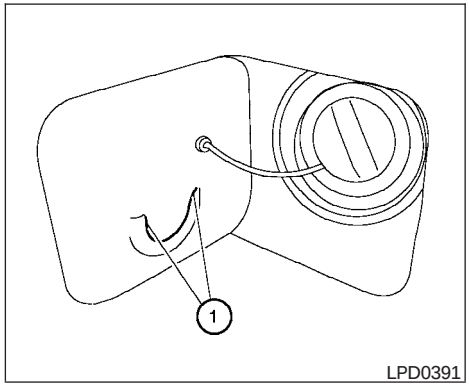

FUEL-FILLER CAP

The fuel-filler cap is a ratcheting type. Turn the cap counterclockwise to remove. To tighten, turn the cap clockwise until ratcheting clicks are heard.

Put the fuel-filler cap on the cap holder ① while refueling.

⚠ WARNING

- **Gasoline is extremely flammable and highly explosive under certain conditions. You could be burned or seriously injured if it is misused or mishandled. Always stop the engine and do not smoke or allow open flames or sparks near the vehicle when refueling.**
- **Do not attempt to top off the fuel tank after the fuel pump nozzle shuts off automatically. Continued refueling may cause fuel overflow, resulting in fuel spray and possibly a fire.**
- **Use only an original equipment type fuel-filler cap as a replacement. It has a built-in safety valve needed for proper operation of the fuel system and emission control system. An incorrect cap can result in a serious malfunction and possible injury. It could also cause the malfunction indicator light to come on.**
- **Never pour fuel into the throttle body to attempt to start your vehicle.**

- **Do not fill a portable fuel container in the vehicle or trailer. Static electricity can cause an explosion of flammable liquid, vapor or gas in any vehicle or trailer. To reduce the risk of serious injury or death when filling portable fuel containers:**
  - **Always place the container on the ground when filling.**
  - **Do not use electronic devices when filling.**
  - **Keep the pump nozzle in contact with the container while you are filling it.**
  - **Use only approved portable fuel containers for flammable liquid.**

CAUTION

- **If fuel is spilled on the vehicle body, flush it away with water to avoid paint damage.**

- **Tighten until the fuel-filler cap clicks. Failure to tighten the fuel-filler cap properly may cause the malfunction indicator light (MIL) to illuminate. If the light illuminates because the fuel-filler cap is loose or missing, tighten or install the cap and continue to drive the vehicle. The light should turn off after a few driving trips. If the light does not turn off after a few driving trips, have the vehicle inspected by an INFINITI dealer.**
- **For additional information, see the "Malfunction Indicator Light (MIL)" in the "Instruments and Controls" section earlier in this manual.**

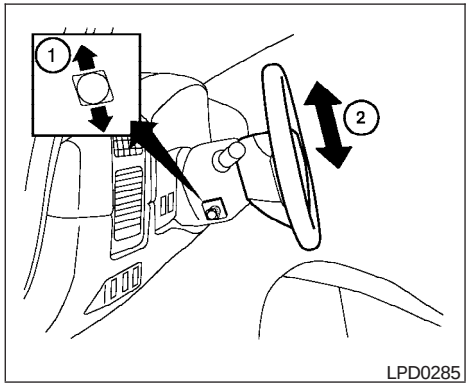

TILT OPERATION

Push the switch ① to adjust the steering wheel up or down ② to the desired position.

WARNING

Do not adjust the steering wheel while driving. You could lose control of your vehicle and cause an accident.

ENTRY/EXIT FUNCTION

The automatic drive positioner system will make the steering wheel move up automatically when the key is removed from the ignition switch. This lets the driver get into and out of the seat more easily. The steering wheel moves back into position when the key is inserted into the ignition switch.

For more information, see “Automatic drive positioner” later in this section.

PEDAL POSITION ADJUSTMENT

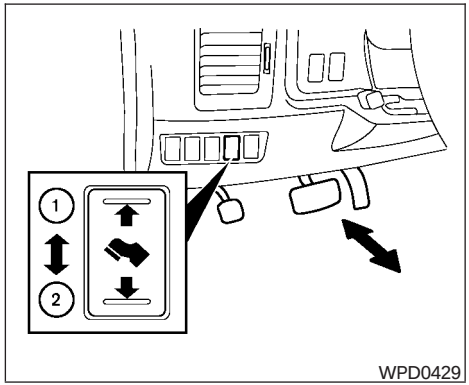

The accelerator and brake pedals can be adjusted for driving comfort.

Use the pedal adjusting switch to adjust the brake and accelerator pedal position forward ① or backward ②.

The brake and accelerator pedals cannot be adjusted separately.

⚠ CAUTION

Do not adjust the pedal position with your foot on the pedal.

SUN VISORS

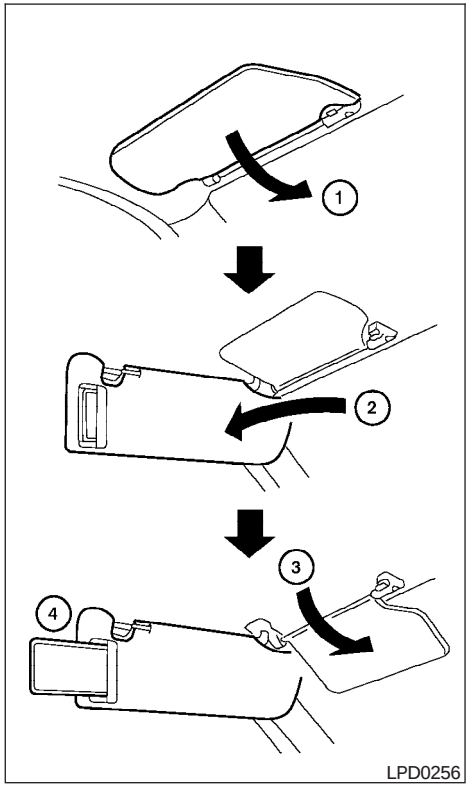

① To block glare from the front, swing down the main sun visor.

② To block glare from the side, remove the main sun visor from the center mount and swing the visor to the side.

③ To block glare from the side and front, swing down the sub-sun visor.

④ Slide the extension sun visor in or out as needed.

⚠ CAUTION

- **Do not store the sun visor before returning the extension to its original position.**
- **Do not pull the extension sun visor forcedly downward.**

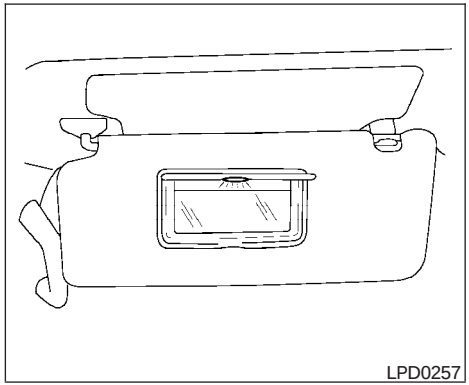

VANITY MIRRORS

To access the vanity mirror, pull the sun visor down and flip open the mirror cover. The vanity mirror will illuminate when the mirror cover is open.

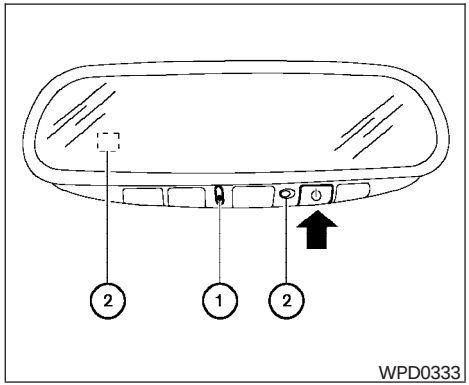

AUTOMATIC ANTI-GLARE REARVIEW MIRROR

The inside mirror is designed so that it automatically dims according to the intensity of the headlights of the vehicle following you. The automatic anti-glare feature operates only when the ignition switch is in the ON position.

The indicator light ① will illuminate when the automatic anti-glare feature is operating.

To turn off the automatic anti-glare feature, press the ⏻ button. The indicator light will turn off.

To turn on the automatic anti-glare feature, press the ⏻ button again. The indicator light will turn on.

For information on the automatic anti-glare outside mirrors, see “Automatic anti-glare outside mirrors” later in this section.

For information on HomeLink® Universal Transceiver operation, see “HomeLink® Universal Transceiver” in the “Instrument and controls” section of this manual.

For information on the compass and outside temperature display, see “Compass display” in the “Instrument and controls” section of this manual.

NOTE:

Do not hang any objects over the sensors ② or apply glass cleaner to the sensors. Doing so will reduce the sensitivity of the sensors, resulting in improper operation.

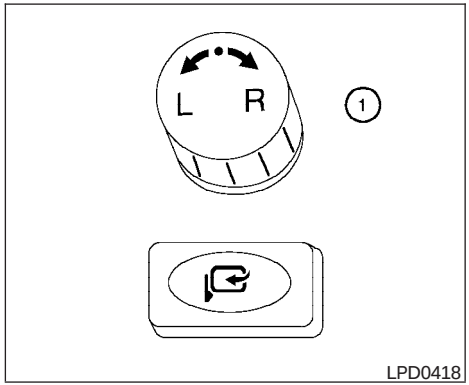

OUTSIDE MIRRORS

The outside mirror remote control will operate only when the ignition switch is in the ACC or ON position.

Rotate the round switch ① to select the right or left mirror. Adjust each mirror to the desired position pushing the round switch.

⚠ WARNING

- **Objects viewed in the outside mirror on the passenger side are closer than they appear. Be careful when moving to the right. Using only this mirror could cause an accident. Use the inside mirror or glance over your shoulder to properly judge distances to other objects.**
- **Do not adjust the mirrors while driving. You could lose control of your vehicle and cause an accident.**

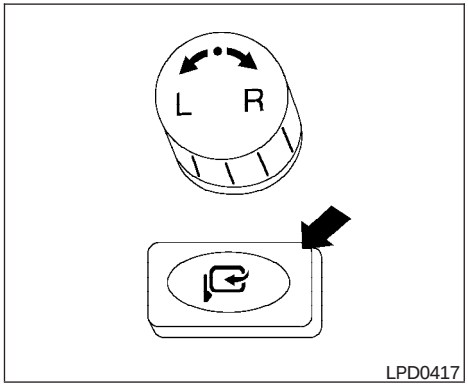

Power folding outside mirrors

CAUTION

Do not manually fold the power folding mirrors. Manually folding the mirrors can damage the mirrors.

Press the switch to open or close the mirrors.

Automatic anti-glare outside mirror (Driver's side only)

The outside mirror will automatically dim during nighttime conditions to reduce the glare from the headlights of trailing vehicles. The automatic anti-glare feature operates only when the ignition switch is in the ON position.

The automatic anti-glare feature will be on when starting the vehicle. The indicator light on the automatic anti-glare rearview mirror will illuminate when the automatic anti-glare feature is operating.

To turn off the anti-glare feature, push the ⏻ button on the rearview mirror. The indicator light will turn off.

To turn on the anti-glare feature again, push the ⏻ button on the rearview mirror. The indicator light will turn on.

For information on the automatic anti-glare rearview mirror, see "Automatic anti-glare rearview mirror" earlier in this section.

Heated mirrors

The outside mirrors can be heated to defrost, defog, or de-ice for improved visibility. For additional information, see "Rear window and outside mirror defroster switch" in the "Instrument and controls" section of this manual.

AUTOMATIC DRIVE POSITIONER

The automatic drive positioner system has two features:

- Memory storage function
- Entry/exit function

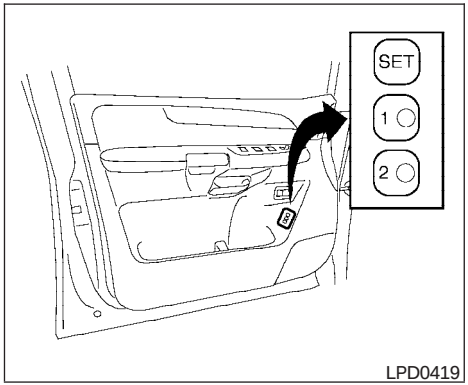

MEMORY STORAGE FUNCTION

Two positions for the driver's seat, steering wheel, accelerator and brake pedals, and outside mirrors can be stored in the automatic drive positioner memory. Follow these procedures to use the memory system.

1. Set the automatic transmission shift selector lever to the P (Park) position.
2. Turn the ignition ON.
3. Adjust the driver's seat, steering wheel, accelerator and brake pedals, and outside mirrors to the desired positions by manually operating each adjusting switch. For additional information, see "Seats" in the "Safety—Seats, seat belts and supplemental restraint system" section and "Pedal position adjustment," "Steering wheel" and "Outside mirrors" earlier in this section.

   During this step, do not turn the ignition to any position other than ON.
4. Push the SET switch and, within 5 seconds, push the memory switch (1 or 2).

   The indicator light for the pushed memory switch will come on and stay on for approximately 5 seconds after pushing the switch. After the indicator light goes off, the selected positions are stored in the selected memory (1 or 2).

If a new memory is stored in the same memory switch, the previous memory will be deleted.

Linking a keyfob to a stored memory position

Each keyfob can be linked to a stored memory position (memory switch 1 or 2) with the following procedure.

1. Follow the steps for storing a memory position.
2. While the indicator light for the memory switch being set is illuminated for 5 seconds, press the button on the keyfob. The indicator light will blink. After the indicator light goes off, the keyfob is linked to that memory setting.

When the ignition switch is moved back to the OFF position, press the button on the keyfob. The driver's seat, steering wheel, accelerator and brake pedals, and outside mirrors will move to the memorized position.

NOTE:

If a new memory position is saved to the memory switch, the keyfob automatically re-links.

Confirming memory storage

- Turn the ignition ON and push the SET switch. If the main memory has not been stored, the indicator light will come on for approximately 0.5 seconds. When the memory has stored the position, the indicator light will stay on for approximately 5 seconds.
- If the battery cable is disconnected, or if the fuse opens, the memory storage function will

be canceled and must be restarted before a stored memory position can be set again. Drive the vehicle over 25 MPH (40 km/h) to restart the memory storage function. You can also restart the memory storage function using the following procedure.

1. Connect the battery cable or replace the fuse.
2. Open and close the driver's door more than two times with the ignition key in the LOCK position.

   Once the memory storage function has been restarted, you can store a memory position. See "Memory storage function" earlier in this section.

Selecting the memorized position

Set the shift selector lever to the P (Park) position, then:

- Within 45 seconds of opening the driver's door, push the memory switch (1 or 2) or
- Turn the ignition switch to the ON position and push the memory switch (1 or 2).

The driver's seat, steering wheel, accelerator and brake pedals, and outside mirrors will move to the memorized position with the indicator light blinking, and then the light will stay on for approximately 5 seconds.

ENTRY/EXIT FUNCTION

This system is designed so that the driver's seat and steering wheel will automatically move when the shift selector lever is in the P (Park) position. This allows the driver to get into and out of the driver's seat more easily.

The driver's seat and steering wheel will slide backward:

- When the key is removed from the ignition switch and the driver's door is opened.
- When the driver's door is opened with the ignition key turned to LOCK.
- When the ignition key is turned from ACC to LOCK with the driver's door open.

The driver's seat and steering wheel will return to the previous position:

- When the key is inserted into the ignition switch and the driver's door is closed.
- When the driver's door is closed with the key turned to LOCK.
- When the key is turned from ACC to ON while the shift selector lever is in the P (Park) position.

The entry/exit function can be adjusted or canceled. See "Comfort & convenience settings" in the "Monitor, climate, audio, phone and voice recognition systems" section of this manual.

Restarting the entry/exit function

If the battery cable is disconnected or if the fuse opens, the entry/exit function will be disabled. Drive the vehicle over 25 MPH (40 km/h) to restart the entry/exit function. You can also restart the entry/exit function using the following procedure.

1. Connect the battery cable or replace the fuse.
2. Open and close the driver's door more than two times with the ignition key in the LOCK position.

The entry/exit function should now work properly.

SYSTEM OPERATION

The automatic drive positioner system will not work or will stop operating under the following conditions:

- When the vehicle speed is above 4 MPH (7 km/h).
- When any of the memory switches are pushed while the automatic drive positioner is operating.

- When the adjusting switch for the driver's seat is turned on while the automatic drive positioner is operating.
- When the memory switch (1 or 2) is not pushed and held for at least 1 second.
- When the seat has been already moved to the memorized position.
- When no seat position is stored in the memory switch.
- When the shift selector lever is moved from P (Park) to any other position.
- When the driver's door remains open more than 45 seconds and the ignition switch is not in the ON position.

The automatic drive positioner system can be adjusted and canceled. See "Comfort & Convenience" in the "Monitor, climate, audio, phone and voice recognition systems" section of this manual.

4 Monitor, climate, audio, phone and voice recognition systems

Control panel buttons — color screen with Navigation System 4-2
How to use the INFINITI controller 4-3
How to use the touch screen 4-3
Start-up screen 4-5
How to select menus on the screen 4-5
How to use the STATUS button 4-6
How to use the INFO button 4-6
How to use the SETTING button 4-11
☼/☽ OFF button 4-18
RearView Monitor 4-18
How to read the displayed lines 4-19
Adjusting the screen 4-19
Operating tips 4-20
Vents 4-21
Heater and air conditioner (automatic) 4-22
Automatic operation 4-22
Manual operation 4-23
Operating tips 4-23
Rear seat air conditioner 4-24
Controls 4-25
Servicing air conditioner 4-25
Audio system 4-25
Radio 4-25
FM radio reception 4-26
AM radio reception 4-26
Satellite radio reception (if so equipped) 4-26
Audio operation precautions 4-27
FM/AM/SAT radio with compact disc (CD) player 4-33
CompactFlash™ (CF) player operation 4-38
Music Box hard-disk drive audio system 4-40
CD/CF (CompactFlash™) care and cleaning 4-49
Steering wheel switch for audio control 4-50
Rear audio controls 4-52
Antenna 4-53
INFINITI mobile entertainment system (MES) (if so equipped) 4-53
Digital video disc (DVD) player controls 4-55
Remote control 4-56
Flip-down screen 4-56
Before operating the DVD mobile entertainment system 4-58
Playing a digital versatile disc (DVD) 4-59
Remote control operation 4-63
Care and maintenance 4-65

How to handle the DVD 4-66
Car phone or CB radio 4-69
Bluetooth® Hands-Free Phone System 4-69
Regulatory Information 4-71
Voice commands 4-72
Pairing procedure 4-72
Phonebook 4-73
Making a call 4-75
Receiving a call 4-76
During a call 4-77
Ending a call 4-77
Phone setting 4-78
Call volume 4-80
INFINITI Voice Recognition System 4-80
INFINITI Voice Recognition Standard Mode 4-81
Using the system 4-83
Before Starting 4-83
Giving voice commands 4-84
INFINITI Voice Recognition Alternate Command Mode 4-92
Using the system 4-99
Speaker Adaptation Function 4-101
Troubleshooting guide 4-104

CONTROL PANEL BUTTONS — COLOR SCREEN WITH NAVIGATION SYSTEM

⚠ WARNING

- **Positioning of the heating or air conditioning controls and display controls should not be done while driving in order that full attention may be given to the driving operation.**
- **Do not disassemble or modify this system. If you do, it may result in accidents, fire, or electrical shock.**
- **Do not use this system if you notice any abnormality, such as a frozen screen or lack of sound. Continued use of the system may result in accident, fire or electric shock.**
- **In case you notice any foreign object in the system hardware, spill liquid on it, or notice smoke or smell coming from it, stop using the system immediately and contact your nearest INFINITI dealer. Ignoring such conditions may lead to accidents, fire or electrical shock.**

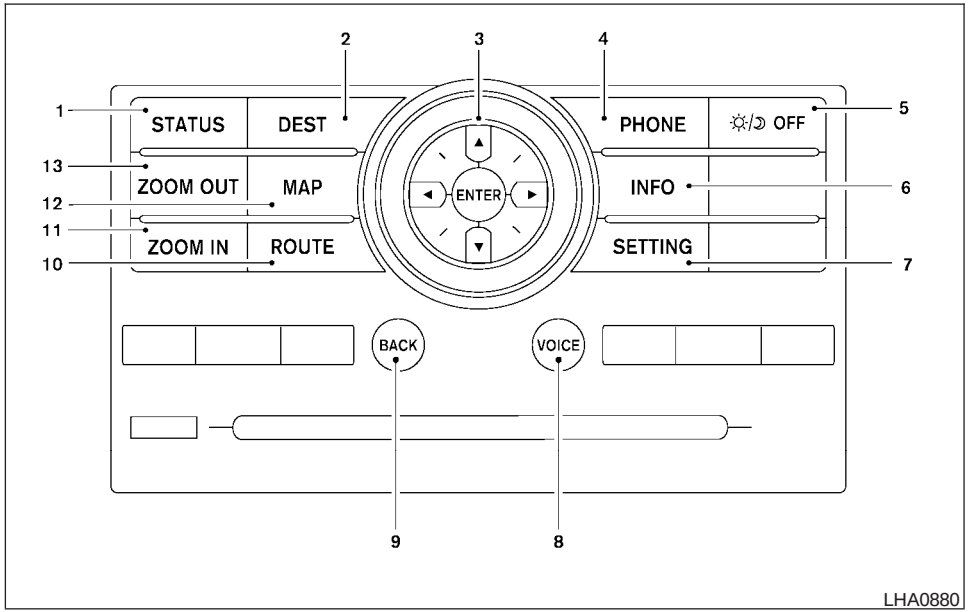

1. STATUS button(P. 4-6)
2. DEST button*
3. INFINITI controller (P. 4-3)
4. PHONE button**
5. ☼/☽ OFF brightness control button (P. 4-18)
6. INFO button (P. 4-6)
7. SETTING button (P. 4-11)
8. VOICE button*

9. BACK (previous) button (P. 4-3)
10. ROUTE button*
11. ZOOM IN button*
12. MAP button*
13. ZOOM OUT button*

*For Navigation system control buttons, refer to the separate Navigation System Owner's Manual.

**For information on the PHONE button, see "Bluetooth® Hands-Free Phone System" later in this section.

When you use this system, make sure the engine is running.

If you use the system with the engine not running (ignition ON or ACC) for a long time, it will discharge the battery, and the engine will not start.

Reference symbols:

ENTER button — This is a button on the control panel.

"Display" key — This is a select key on the screen. By selecting this key, you can proceed to the next function.

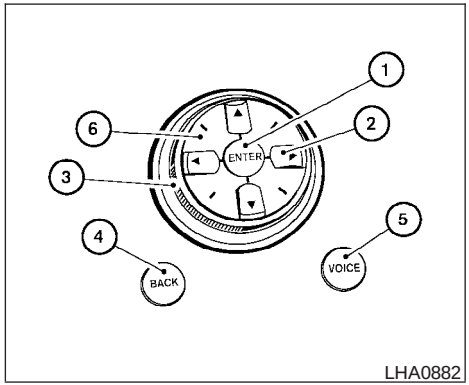

HOW TO USE THE INFINITI CONTROLLER

Use the INFINITI controller to choose an item on the display screen. Select an item on the display using the main directional buttons ② (certain Navigation System functions use the additional directional buttons ⑥) or the center dial ③. Then press the ENTER button ① to select the item or perform the action.

The BACK button ④ has two functions:

- Go back to the previous display (cancel).

If you press the BACK button ④ during setup, the setup will be canceled and/or the display will return to the previous screen.

- Finish setup.

In some screens pressing the BACK button ④ accepts the changes made during setup.

For the VOICE button ⑤ functions, refer to the separate Navigation System Owner's Manual.

HOW TO USE THE TOUCH SCREEN

⚠ CAUTION

- **The glass screen on the liquid crystal display may break if it is hit with a hard or sharp object. If the glass breaks, do not touch the liquid crystalline material, which contains a small amount of mercury. In case of contact with skin, wash immediately with soap and water.**
- **To clean the display, never use a rough cloth, alcohol, benzine, thinner or any kind of solvent or paper towel with a chemical cleaning agent. They will scratch or deteriorate the panel.**

- **Do not splash any liquid such as water or car fragrance on the display. Contact with liquid will cause the system to malfunction.**

To help ensure safe driving, some functions cannot be operated while driving.

The on-screen functions that are not available while driving will be “grayed out” or muted.

Park the vehicle in a safe location and then operate the navigation system.

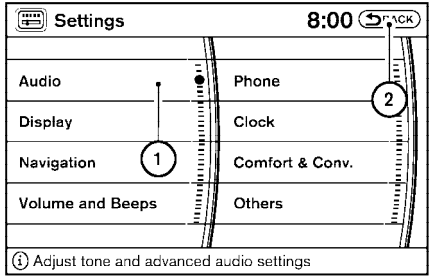

WHA0885

Touch screen operation

With this system, the same operations as those for the INFINITI controller are possible using the touch screen operation.

Selecting the item:

Touch an item to select. To select the “Audio” key, touch the “Audio” key ① on the screen. Touch the “BACK” key ② to return to the previous screen.

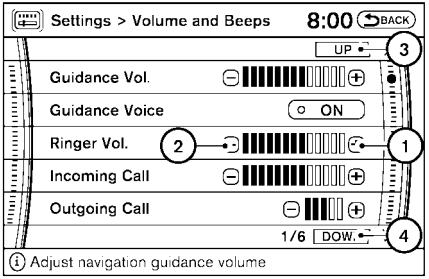

WHA0887

Adjusting the item:

Touch the “+” key ① or the “−” key ② to adjust the settings. Touch the “UP” key ③ to scroll up to the previous page, or touch the “DOWN” key ④ to scroll down to next page.

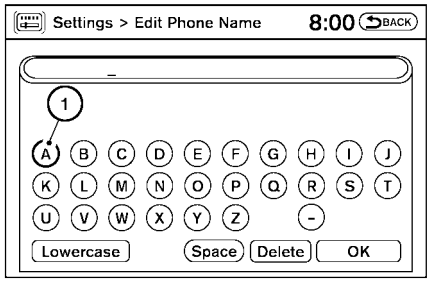

WHA0889

Inputting characters:

Touch the letter or number key ①.

There are some options available when inputting characters.

- **Uppercase:**
  Shows uppercase characters.
- **Lowercase:**
  Shows lowercase characters.
- **Space:**
  Inserts a space.
- **Symbols:**
  Shows symbols such as the question mark (?).
- **Delete:**
  Deletes the last character that has been input with one touch. Touch and hold the "Delete" key to delete all of the characters.
- **OK:**
  Completes the character input.

Touch screen maintenance

If you clean the display screen, use a dry, soft cloth. If additional cleaning is necessary, use a small amount of neutral detergent with a soft cloth. Never spray the screen with water or detergent. Dampen the cloth first, and then wipe the screen.

START-UP SCREEN

When you push the ignition switch to the ACC or ON position, the SYSTEM START-UP warning is displayed on the screen. When you read and agree with the warning, press the ENTER button.

If you do not push the ENTER button, you will not be able to use the navigation system.

To proceed to the next step, refer to the separate Navigation System Owner's Manual.

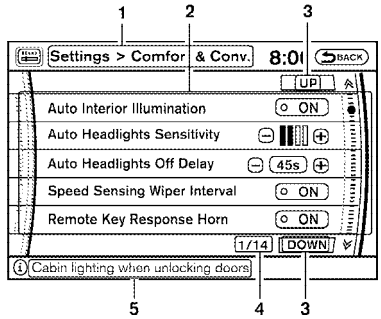

LHA0890

HOW TO SELECT MENUS ON THE SCREEN

Vehicle functions are viewed on the center display screen in menus. Whenever a menu selection is made or menu item is highlighted, different areas on the screen provide you with important information. See the following for details.

1. Header:
   Shows the path used to get to the current screen (for example, press the SETTING button > then select the "Comfort & Conv." key).

2. Menu Selections:
   Shows the options to choose within that menu screen (for example, Auto Interior Illumination, etc.).
3. UP/DOWN Movement Indicator:
   Shows that the INFINITI controller may be used to move UP/DOWN on the screen and select more options.
4. Screen Count:
   Shows the number of menu selections available for that screen (for example, 1/14).
5. Footer/Information Line:
   Provides more information (if available) about the menu selection currently highlighted (for example, Cabin lighting when unlocking doors).

HOW TO USE THE STATUS BUTTON

To display the status of the audio, climate control system, fuel consumption and navigation system, press the STATUS button.

The following information will appear when the STATUS button is pressed:

Audio → Audio and Climate control system → Audio, climate control temperature settings, average fuel economy and distance to empty → Audio, climate control temperature settings and Navigation System → Audio

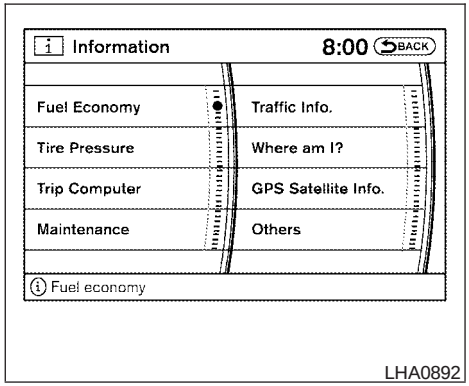

HOW TO USE THE INFO BUTTON

Press the INFO button; the display screen shows vehicle and navigation information for your convenience.

The information shown on the screen should be a guide to determine the condition of the vehicle. See the following for details.

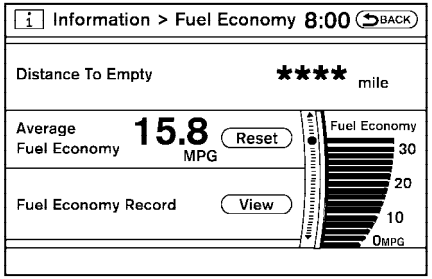

LHA0893

Fuel economy

Press the INFO button, then select the “Fuel Economy” key using the INFINITI controller and press the ENTER button to display Average Fuel Economy, Distance to Empty and Fuel Economy Record.

Distance to empty (MI or km)

The Distance To Empty (DTE) mode provides you with an estimation of the distance that can be driven before refueling. The DTE is constantly calculated based on the amount of fuel in the fuel tank and the actual fuel consumption. The display is updated every 30 seconds. When the fuel level is low, the DTE display will change to (*).

NOTE:

- **If the amount of fuel added while the ignition switch is OFF is small, the display just before the ignition switch is turned OFF may continue to be displayed.**
- **When driving uphill or rounding curves, the fuel in the tank shifts, which may momentarily change the display.**

Average fuel economy (MPG or L/100 km)

The Average Fuel Economy is calculated based on fuel consumption since the last reset. The display is updated every 30 seconds and 1/3 mile (500 m). After a reset or connecting the battery cables, the display might show (**.*).

Resetting fuel economy

The average fuel economy calculation can be reset to 0. Press the INFO button and select the “Fuel Economy” key, then select the “Reset” key using the INFINITI controller and press the ENTER button.

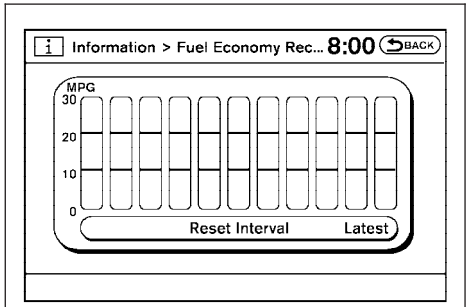

LHA0894

Fuel economy record

Press the INFO button, then select the “Fuel Economy” key, then select the “View” key using the INFINITI controller and press the ENTER button.

The average fuel consumption history will be displayed in a graph form along with the average fuel for the previous Reset-to-Reset period.

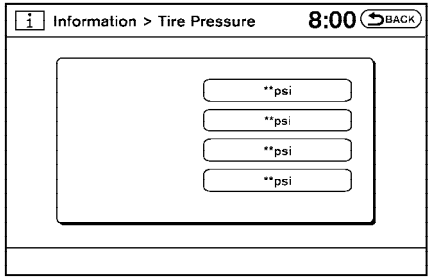

LHA0895

Tire pressure information

To display tire pressure information, press the INFO button, then select the “Tire Pressure” key using the INFINITI controller and press the ENTER button.

Pressure indication in ** psi on the screen indicates that the pressure is being measured. After a few driving trips, the pressure for each tire will be displayed randomly.

The order of tire pressure figures displayed on the screen does not correspond with the actual order of the tire position.

Tire pressure rises and falls depending on the heat caused by the vehicle’s traveling condition and the temperature.

In case of low tire pressure, a message is displayed on the screen:

LOW PRESSURE — Check All Tires.

WARNING

- **When a spare tire is mounted or a wheel is replaced, tire pressure will not be indicated, the TPMS will not function and the low tire pressure warning light will flash for approximately 1 minute. The light will remain on after 1 minute. Contact your INFINITI dealer as soon as possible for tire replacement and/or system resetting.**
- **Replacing tires with those not originally specified by INFINITI could affect the proper operation of the TPMS.**

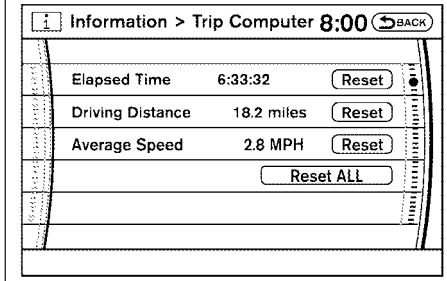

LHA0896

Trip computer

Press the INFO button, then select the “Trip Computer” key using the INFINITI controller and press the ENTER button.

The trip computer will display the following items:

- Elapsed Time – Journey time since the last reset up to a maximum of 99 hours and 59 minutes.
- Driving Distance – Distance driven (miles or km) since the last reset.
- Average Speed – Average speed driven (MPH or km/h) since the last reset.

Resetting the trip computer

Each item in the trip computer can be reset to 0. Select the “Reset” key on the item that needs to be reset using the INFINITI controller and press the ENTER button.

To reset all of the items in the trip computer select the “Reset ALL” key and press the ENTER button. A confirmation screen will appear; select the “Yes” key and press the ENTER button.

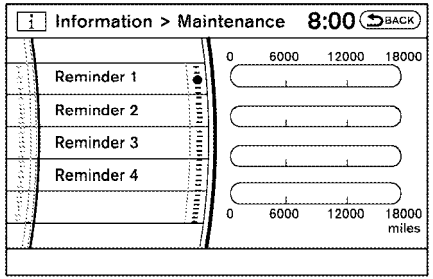

LHA0897

Maintenance items

Press the INFO button and select the “Maintenance” key using the INFINITI controller and press the ENTER button; the maintenance information will be displayed on the screen.

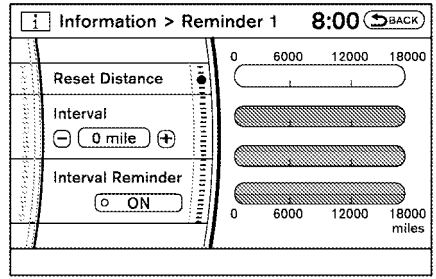

LHA0898

Changing the maintenance interval

Select one of the “Reminder (1 – 4)” keys using the INFINITI controller and press the ENTER button to display the screen to change the maintenance interval.

Select the “Interval” key using the INFINITI controller and press the ENTER button. Use the INFINITI controller to change the maintenance interval, to accept the changes, press the BACK button.

Resetting the maintenance interval

To reset the reminder schedule (distance) to 0 miles (km), select the “Reset Distance” key using the INFINITI controller and press the ENTER button.

LHA0839

Displaying the maintenance notice reminder

Select the “Interval Reminder ON” key and press the ENTER button to display the MAINTENANCE INFORMATION automatically at the set maintenance interval. The indicator light will illuminate when it is ON.

The MAINTENANCE NOTICE screen will be automatically displayed as shown when both of the following conditions are met:

- The vehicle is driven the set distance and the ignition key is turned OFF.
- The ignition key is turned ON the next time the vehicle will be driven.

To return to the previous display after the MAINTENANCE NOTICE screen is displayed, press the BACK button.

The MAINTENANCE NOTICE screen displays each time the key is turned ON until one of the following conditions are met:

- The “Reset” key is selected.
- The “Interval Reminder ON” key is set to OFF (indicator light not illuminated).
- The maintenance interval is set again.

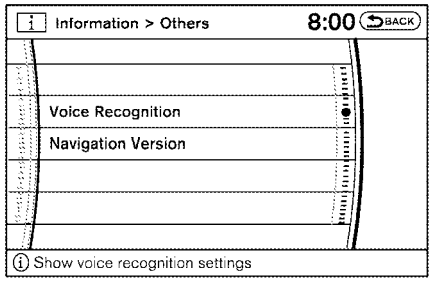

LHA0908

Other items

Press the INFO button and select the “Others” key using the INFINITI controller and press the ENTER button to view information on the navigation and voice recognition systems.

Voice recognition

For Voice Recognition settings, refer to “INFINITI Voice Recognition system” later in this section.

Navigation version

Refer to the separate Navigation System Owner’s Manual for information regarding this item.

Traffic Info.

Refer to the separate Navigation System Owner’s Manual for information regarding this item.

Where am I?

Refer to the separate Navigation System Owner’s Manual for information regarding this item.

GPS Satellite Info.

Refer to the separate Navigation System Owner’s Manual for information regarding this item.

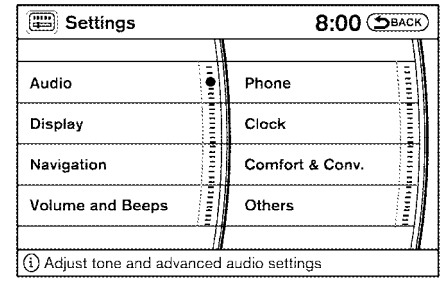

LHA0884

HOW TO USE THE SETTING BUTTON

When the SETTING button is pressed, the SETTINGS screen will appear on the display. You can select and/or adjust several functions, features and modes that are available for your vehicle. Use the INFINITI controller to select each item to be set and press the ENTER button.

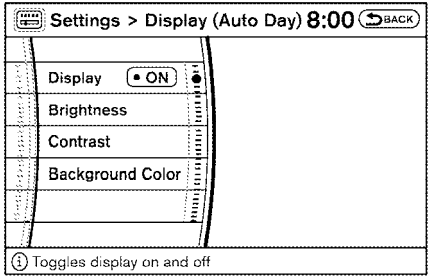

LHA0901

Display settings

Select the “Display” key and press the ENTER button. The Display settings screen will appear.

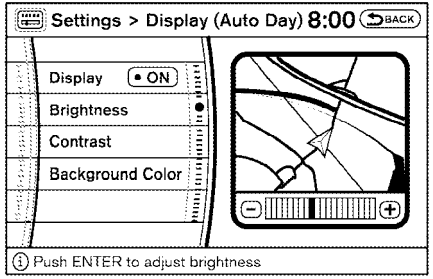

LHA0902

Brightness/contrast:

Select the “Brightness” key or the “Contrast” key to adjust the brightness or contrast of the map background. Use the INFINITI controller to adjust the brightness to darker or brighter and the contrast to lower or higher.

The new settings are automatically saved when you exit the setting screen by pressing the BACK button or any other mode button.

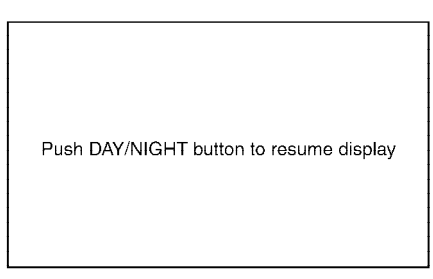

WHA0823

Display off:

Select the “Display ON” key. The indicator of the “Display ON” turns amber and the message above will be displayed briefly. When the audio, HVAC (Heater and air conditioner), or any mode button on the control panel is operated, the display turns on for that operation. If one of the control panel buttons is pressed, the display will not automatically turn off until that operation is finished. Otherwise, the screen turns off automatically after 5 seconds.

To turn the screen on:

- Press the SETTING button and select the “Display” key and then select the “Display ON” key. Then set the screen to on by pressing the ENTER button, or
- Hold the ☼/☽ OFF button for approximately 2 seconds and the message “resuming display” will appear and the “Display ON” key will be automatically turned on (no amber indicator).

Background color

Select the “Background Color” key; the display color changes between day and night.

The new settings are automatically saved when you exit the setting screen by pressing the BACK button or any other mode button.

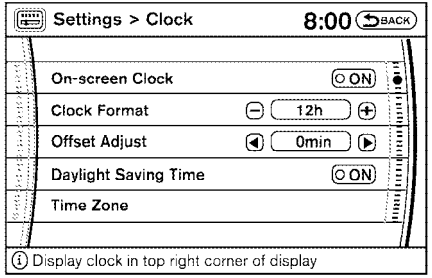

LHA0904

Clock

The following display will appear after pressing the SETTING button, then selecting the “Clock” key using the INFINITI controller and pressing the ENTER button.

On-screen Clock:

When this item is enabled (indicator light illuminated), a clock is always displayed in the upper right corner of the screen.

This clock will indicate the time almost exactly because it is always adjusted by the GPS system.

Clock Format:

Choose either the 12h (12–hour) clock display or the 24h (24–hour) clock display.

Offset Adjust:

Adjust the time by increasing or decreasing per minute.

Daylight Savings Time:

When this item is enabled (indicator light illuminated), daylight savings time is on. To turn off the daylight savings time, touch the “ON” key; the amber indicator light will disappear.

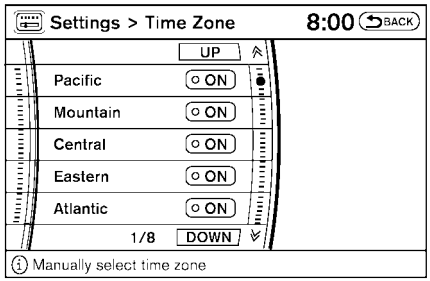

LHA0905

Time Zone:

Select the “Time Zone” key; the Time Zone screen will appear.

Select one of the following zones, depending on the current location, by selecting the correct time zone key and pressing the ENTER button to enable that time zone (indicator light will illuminate for that location).

- Pacific
- Mountain
- Central
- Eastern
- Atlantic
- Newfoundland
- Hawaii
- Alaska

After selection/settings, press the BACK button or any other mode button to accept the changes.

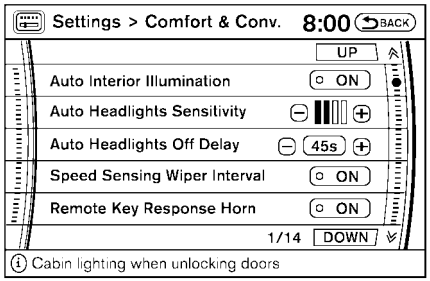

WHA0891

Comfort & Convenience settings

Select the “Comfort & Conv.” key by using the INFINITI controller and pressing the ENTER button. The comfort and convenience option screen will be displayed.

You can set the following operating conditions by selecting the desired item using the INFINITI controller, then pressing the ENTER button. The indicator light, box at the right of the selected item, alternately turns on and off each time the ENTER button is pressed.

Indicator light is illuminated — ON

Indicator light is not illuminated — OFF

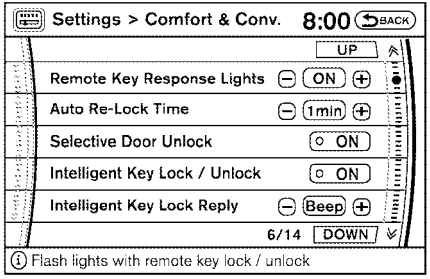

LHA0906

Auto Interior Illumination: Select to turn on or turn off the illumination of the interior lights when any door is unlocked.

Auto Headlights Sensitivity: Select to adjust the sensitivity of the automatic headlights higher (right) or lower (left).

Auto Headlights Off Delay: Select to change the duration of the automatic headlight off timer from 0, 30, 45, 60, 90, 120, 150 and 180 second periods.

Speed Sensing Wiper Interval: Select to turn on or turn off the wiper interval adjusted automatically according to the vehicle speed.

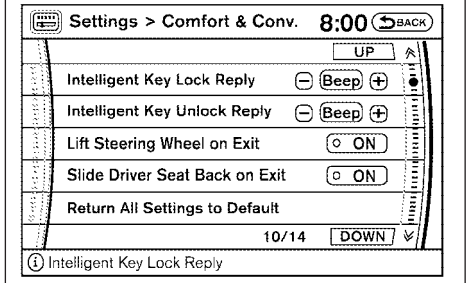

LHA0907

Remote Key Response Horn: Select to turn on or turn off the horn chirp mode used when the LOCK button on the keyfob is pressed.

NOTE:

If you change the horn beep or the lamp flash feature with the keyfob, the mode will not be changed with the display. Use the keyfob to return to the previous mode and re-enable the display control.

Remote Key Response Lights: Select to turn on or turn off the hazard indicator flash mode used when the LOCK or UNLOCK button on the keyfob is pressed.

NOTE:

If you change the horn beep or the lamp flash feature with the keyfob, the mode will not be changed with the display. Use the keyfob to return to the previous mode and re-enable the display control.

Auto Re-Lock Time: Select to set the length of time before doors automatically re-lock.

Selective Door Unlock: When this item is turned on, only the driver's door is unlocked first after the door unlock operation. When the door handle request switch on the driver's or front passenger's side door is pushed to be unlocked, only the corresponding door is unlocked first. All the doors can be unlocked if the door unlock operation is performed again within 5 seconds.

When this item is turned to off, all the doors will be unlocked after the door unlock operation is performed once.

Intelligent Key Lock / Unlock: Select to turn on or turn off the door lock/unlock function by pushing the door handle request switch.

Intelligent Key Lock Reply: Select to change the sound of the Intelligent Key mode used when a door handle request switch is pushed to lock.

Select to turn off all sounds made when a door handle request switch is pushed, by selecting the “OFF” key.

Intelligent Key Unlock Reply: Select to change the sound of the Intelligent Key mode used when a door handle request switch is pushed to unlock.

Select to turn off all sounds made when a door handle request switch is pushed, by selecting the “OFF” key.

Lift Steering Wheel on Exit: Select to turn on or turn off the steering wheel moving upward for easy exit when the ignition switch is in the OFF position and the driver’s door is opened. After getting into the vehicle and pushing the ignition switch to the ACC position, the steering wheel moves to the previous position.

Slide Driver Seat Back on Exit: Select to turn on or turn off the driver’s seat moving backwards for easy exit when the ignition switch is in the OFF position and the driver’s door is opened. After getting into the vehicle and pushing the ignition switch to the ACC position, the driver’s seat moves to the previous position.

Return All Settings to Default: Select to change all the comfort and convenience systems to their default settings.

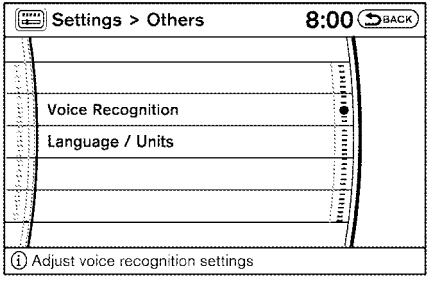

LHA0909

Others settings

Select the “Others” key by using the INFINITI controller and pressing the ENTER button. Voice recognition, language and units setting screen will be displayed.

Voice Recognition:

For Voice Recognition settings, refer to “INFINITI Voice Recognition system” later in this section.

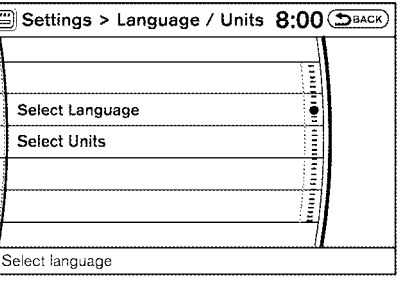

LHA0911

Language / Units

Use the INFINITI controller to select the “Language / Units” key and press the ENTER button. Select which setting you want to change using the INFINITI controller and selecting either the “Select Language” key or the “Select Units” key by pressing the ENTER button.

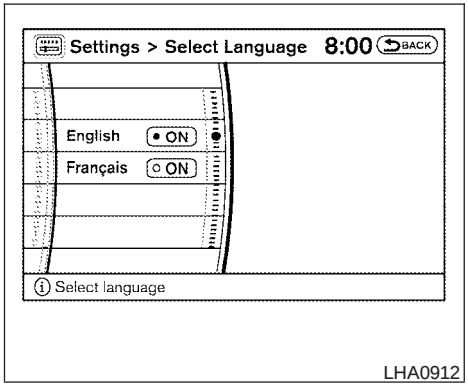

Select Language:

Select the “English” key or the “Français” key to change the language shown on the display.

If you select the “Français” key, French language will be displayed so please use the French Owner’s Manual. To obtain a French Owner’s Manual please see, “Owner’s Manual/Service Manual Order Information” in the “Technical and consumer information” section.

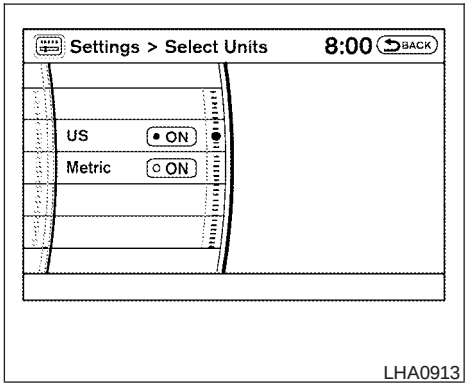

Select Units:

Select the “US” (Mile, °F, MPG) key or the “Metric” (km, °C, L/100 km) key to change the units shown on the display.

Audio settings

For audio settings, refer to “Audio System” later in this section.

Navigation settings

Refer to the separate Navigation System Owner’s Manual for information regarding these settings.

Volume and beeps settings

Navigation volume

For navigation volume settings refer to the separate Navigation System Owner’s Manual for information regarding these settings.

Phone volume

For phone volume settings refer to “Bluetooth® Hands-Free Phone System” later in this section.

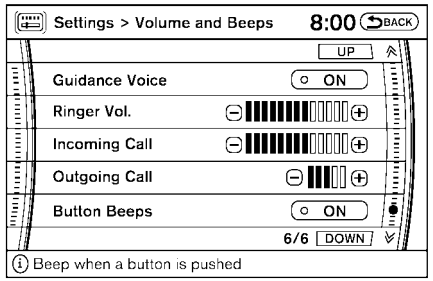

WHA0903

Beep setting

With this option on (indicator light illuminated), a beep will sound if any control panel button is pressed.

Phone settings

For phone settings refer to “Bluetooth® Hands-Free Phone System” later in this section.

☼/☽ OFF BUTTON

To change the display brightness, press the ☼/☽ OFF button. Pressing the button again will change the display to the day AUTO or the night ☽ display. Then, adjust the brightness by using the INFINITI controller.

If no operation is done within 10 seconds, the display will return to the previous display.

Press and hold the ☼/☽ OFF button for more than 2 seconds to turn the display off. Press the button again to turn the display on.

When the shift selector is shifted into the R (Reverse) position, the monitor display shows the view directly to the rear of the vehicle.

⚠ WARNING

- **The system is designed as an aid to the driver in detecting large stationary objects to help avoid damaging the vehicle. The system will not detect small objects below the bumper, and may not detect objects close to the bumper or on the ground.**
- **The RearView Monitor is a convenience but it is not a substitute for proper backing. Always turn and check that it is safe to do so before backing up. Always back up slowly.**
- **Objects viewed in the RearView Monitor differ from actual distance because a wide-angle lens is used.**
- **Make sure that the lift gate is securely closed when backing up.**
- **Do not put anything on the rearview camera. The rearview camera is installed beside the license plate light.**

- **When washing the vehicle with high-pressure water, be sure not to spray it around the camera. Otherwise, water may enter the camera unit causing water condensation on the lens, a malfunction, fire or an electric shock.**
- **Do not strike the camera. It is a precision instrument. Otherwise, it may malfunction or cause damage resulting in a fire or an electric shock.**

⚠CAUTION

There is a plastic cover over the camera. Do not scratch the cover when cleaning dirt or snow from the cover.

HOW TO READ THE DISPLAYED LINES

Lines which indicate the vehicle clearance and distances to objects with reference to the bumper line Ⓐ are displayed on the monitor.

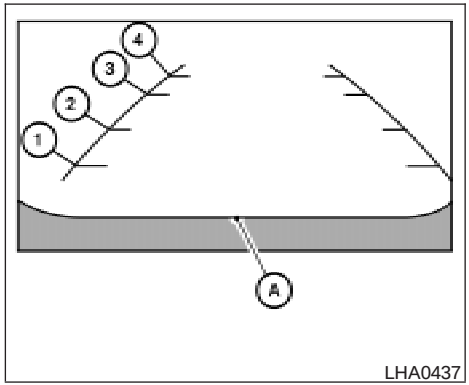

They are indicated as reference distances to objects. The lines and colors in the display indicate distances from the back bumper line Ⓐ in the illustration.

① 1.5 ft (0.5 m) red

② 3 ft (1 m) yellow

③ 7 ft (2 m) green

④ 10 ft (3 m) green

The vehicle clearance lines are wider than the actual clearance.

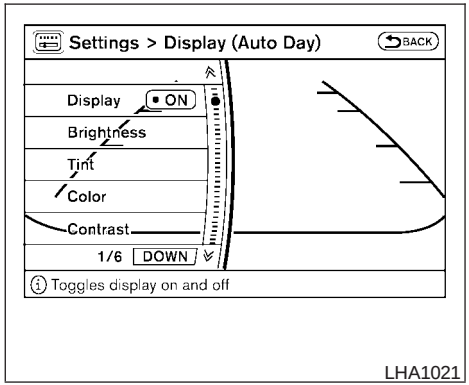

ADJUSTING THE SCREEN

To adjust the quality of the screen, press the SETTING button.

- To adjust the Display ON/OFF, Brightness, Tint, Color, Contrast, and Black Level of the RearView Monitor, press the SETTING button with the RearView Monitor on, then touch one of the adjustment keys. Press the "–" or "+" key on the item and adjust the level.
- Do not adjust the Brightness, Contrast, Tint and Color of the RearView Monitor while the vehicle is moving.

OPERATING TIPS

- When the shift selector is shifted to R (Reverse), the monitor screen automatically changes to the RearView Monitor mode. However, the radio can be heard.
- It may take some time until the RearView Monitor is displayed after the shift selector has been shifted to R (Reverse). Objects may be distorted momentarily until the RearView Monitor screen is displayed completely. When the shift selector is returned to a position other than R (Reverse), it may take some time until the screen changes. Objects on the screen may be distorted until they are completely displayed.
- When the temperature is extremely high or low, the screen may not clearly display objects. This is not a malfunction.
- When strong light directly enters the camera, objects may not be displayed clearly.
- Vertical lines may be seen in objects on the screen. This is due to strong reflected light from the bumper. This is not a malfunction.
- The screen may flicker under fluorescent light. This is not a malfunction.
- The colors of objects on the RearView Monitor may differ somewhat from those of the actual object.
- When the contrast of objects is low at night, pressing the SETTING button may not change the brightness.
- Objects on the monitor may not be clear in a dark place or at night.
- If dirt, rain or snow attaches to the camera, the RearVview Monitor may not display objects. Clean the camera.
- Do not use alcohol, benzine or thinner to clean the camera. This will cause discoloration. To clean the camera, wipe with a cloth dampened with a diluted mild cleaning agent and then wipe with a dry cloth.
- Do not damage the camera as the monitor screen may be adversely affected.
- Do not use body wax on the camera window. If body wax does get on the camera window, wipe off the wax with a clean cloth dampened with mild detergent diluted with water.

VENTS

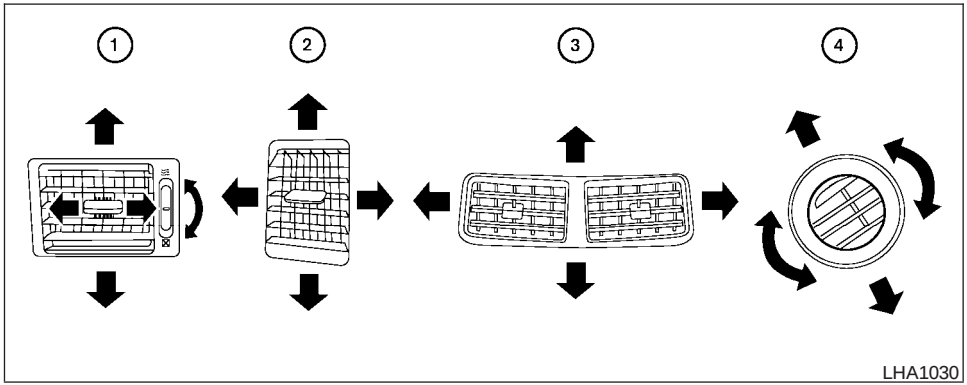

Adjust air flow direction for the driver and passenger side ①, center ②, and rear passenger ③ and ④ vents by moving the vent slide and/or vent assemblies.

For driver and passenger side ①, open or close vents by using the dial. Move the dial toward the ≋ to open the vents or toward the ⊠ to close them.

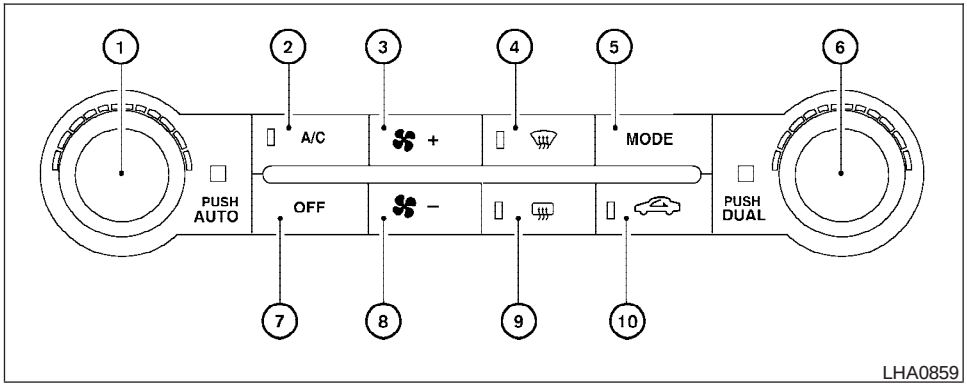

1. Driver temperature control dial/AUTO button
2. A/C ON/OFF button
3. Fan speed control (increase)
4. Front window defroster button
5. MODE button
6. Passenger temperature control dial/ DUAL button
7. System OFF
8. Fan speed control (decrease)
9. Rear window defroster button
10. Air recirculation button

⚠ WARNING

- **The air conditioner cooling function operates only when the engine is running.**
- **Do not leave children or adults who would normally require the assistance of others alone in your vehicle. Pets should also not be left alone. They could accidentally injure themselves or others through inadvertent operation of the vehicle. Also, on hot, sunny days, temperatures in a closed vehicle could quickly become high enough to cause severe or possibly fatal injuries to people or animals.**
- **Do not use the recirculation mode for long periods as it may cause the interior air to become stale and the windows to fog up.**

Start the engine and operate the controls to activate the air conditioner.

AUTOMATIC OPERATION

Cooling or heating (auto)

This mode may be normally used all year round as the system automatically works to keep a constant temperature. Air flow distribution and fan speed are also controlled automatically.

1. Push the AUTO button on. (AUTO will be displayed.)
2. Turn the driver's side temperature control dial to the left or right to set the desired temperature. Driver and passenger temperatures can be set independently. Press DUAL to activate dual climate control functions. Turn the passenger's side temperature control dial to the left or right to set the desired passenger's temperature.

- Adjust the temperature dial to about 75°F (24°C) for normal operation.

- The temperature of the passenger compartment will be maintained automatically. Air flow distribution, fan speed and A/C on/off are also controlled automatically.
- A visible mist may be seen coming from the ventilators in hot, humid conditions as the air is cooled rapidly. This does not indicate a malfunction.

Dehumidified defrosting or defogging

1. Push the defroster control button to turn the system on. The display will show the defrost icon.
2. Turn the temperature dial to the left or right to set the desired temperature.

- To quickly remove ice from the outside of the windows, press and hold the **+** button to set the fan speed to maximum.
- As soon as possible after the windshield is clean, push the AUTO button to return to the auto mode.
- When the DEF control is activated, the air conditioner will automatically be turned on at outside temperatures above 36°F (2°C). If in defrost mode for more than one minute, the air conditioning system will continue to operate until the fan control is turned OFF, the vehicle is shut off, or the A/C button is used to turn off the compressor even if an air flow MODE button other than is selected. This dehumidifies the air which helps defog the windshield. The air recirculation mode automatically turns off, allowing outside air to be drawn into the passenger compartment to further improve the defogging performance.

MANUAL OPERATION

Fan speed control buttons

Press the fan speed control buttons **+ / –** to manually control the fan speed.

Press OFF to turn the system off.

Push the AUTO button to return to automatic control of the fan speed.

Air recirculation

The mode automatically turns off, allowing outside air to be drawn into the passenger compartment to prevent fogging in defrost, floor or def/floor modes.

Push the air recirculation button to recirculate interior air inside the vehicle. Push the AUTO button to return to automatic mode.

Air flow control

Pushing the MODE button manually controls air flow and selects the air outlet:

— Air flows from center and side ventilators.
— Air flows from center and side ventilators and foot outlets.
— Air flows mainly from foot outlets.
— Air flows from defroster and foot outlets.
— Air flows from defroster outlets.

To turn system off

Press the OFF button.

OPERATING TIPS

- When the engine coolant temperature and outside air temperature are low, the air flow from the foot outlets may not operate for a maximum of 150 seconds. However, this is not a malfunction. After the coolant temperature warms up, air flow from the foot outlets will operate normally.

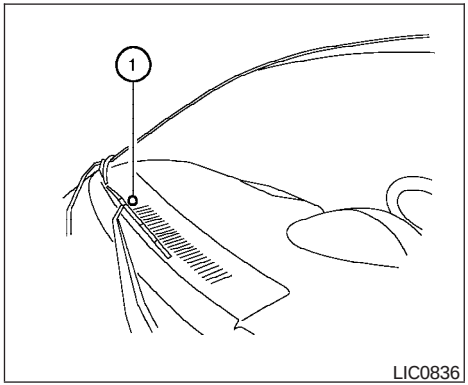

The sunload sensor ①, located on the top center of the instrument panel, helps the system maintain a constant temperature. Do not put anything on or around this sensor.

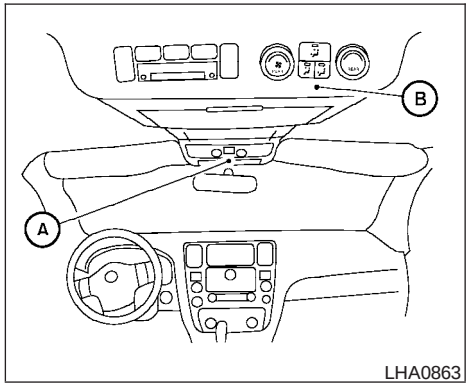

Rear seat temperature and fan speed can be controlled from both the front seat overhead console controls Ⓐ or the rear seat overhead console controls Ⓑ.

Press the REAR CTRL button to transfer control of the rear climate functions to the rear passengers.

To operate the rear air conditioner, the engine must be running.

If the rear seat fan control dial is set to (0), the air conditioner is turned off. If it is set to any of the fan speed positions, air is discharged from the rear vents at the corresponding speed.

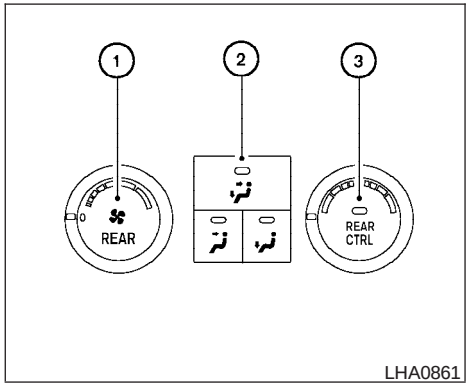

1. Rear fan speed control dial
2. Rear airflow mode buttons
3. Rear temperature control dial

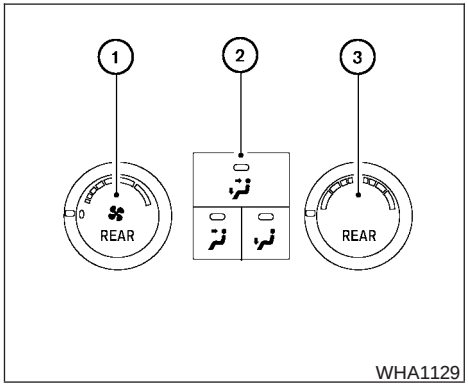

CONTROLS

Fan control dial

The fan control dial turns the rear vent fan on and off, and controls fan speed.

Airflow mode buttons

The airflow mode buttons select where the air flow is directed from.

Temperature control dial

The temperature control dial allows rear passengers to adjust the temperature of the outlet air.

SERVICING AIR CONDITIONER

The air conditioner system in your INFINITI vehicle is charged with a refrigerant designed with the environment in mind.

This refrigerant does not harm the earth's ozone layer.

Special charging equipment and lubricant is required when servicing your INFINITI air conditioner. Using improper refrigerants or lubricants will cause severe damage to your air conditioner system. See "Air conditioner system refrigerant and lubricant recommendations" in the "Technical and consumer information" section of this manual.

An INFINITI dealer is able to service your "environmentally friendly" air conditioning system.

⚠ WARNING

The air conditioner system contains refrigerant under high pressure. To avoid personal injury, any air conditioner service should be done only by an experienced technician with proper equipment.

AUDIO SYSTEM

RADIO

Turn the ignition key to the ACC or ON position and press the VOL (volume)/ON·OFF (power) knob to turn the radio on. If you listen to the radio with the engine not running, the key should be turned to the ACC position.

Radio reception is affected by station signal strength, distance from radio transmitter, buildings, bridges, mountains and other external influences. Intermittent changes in reception quality normally are caused by these external influences.

Using a cellular phone in or near the vehicle may influence radio reception quality.

Radio reception

Your INFINITI radio system is equipped with state-of-the-art electronic circuits to enhance radio reception. These circuits are designed to extend reception range, and to enhance the quality of that reception.

However there are some general characteristics of both FM and AM radio signals that can affect radio reception quality in a moving vehicle, even when the finest equipment is used. These characteristics are completely normal in a given reception area, and do not indicate any malfunction in your INFINITI radio system.

Reception conditions will constantly change because of vehicle movement. Buildings, terrain, signal distance and interference from other vehicles can work against ideal reception. Described below are some of the factors that can affect your radio reception.

Some cellular phones or other devices may cause interference or a buzzing noise to come from the audio system speakers. Storing the device in a different location may reduce or eliminate the noise.

FM RADIO RECEPTION

Range: FM range is normally limited to 25 – 30 mi (40 – 48 km), with monaural (single channel) FM having slightly more range than stereo FM. External influences may sometimes interfere with FM station reception even if the FM station is within 25 mi (40 km). The strength of the FM signal is directly related to the distance between the transmitter and receiver. FM signals follow a line-of-sight path, exhibiting many of the same characteristics as light. For example, they will reflect off objects.

Fade and drift: As your vehicle moves away from a station transmitter, the signals will tend to fade and/or drift.

Static and flutter: During signal interference from buildings, large hills or due to antenna position (usually in conjunction with increased distance from the station transmitter), static or flutter can be heard. This can be reduced by adjusting the treble control to reduce treble response.

Multipath reception: Because of the reflective characteristics of FM signals, direct and reflected signals reach the receiver at the same time. The signals may cancel each other, resulting in momentary flutter or loss of sound.

AM RADIO RECEPTION

AM signals, because of their low frequency, can bend around objects and skip along the ground. In addition, the signals can be bounced off the ionosphere and bent back to earth. Because of these characteristics, AM signals are also subject to interference as they travel from transmitter to receiver.

Fading: Occurs while the vehicle is passing through freeway underpasses or in areas with many tall buildings. It can also occur for several seconds during ionospheric turbulence even in areas where no obstacles exist.

Static: Caused by thunderstorms, electrical power lines, electric signs and even traffic lights.

SATELLITE RADIO RECEPTION (if so equipped)

When the satellite radio is first installed or the battery has been replaced, the satellite radio may not work properly. This is not a malfunction. Wait more than 10 minutes with satellite radio ON and the vehicle outside of any metal or large building for satellite radio to receive all of the necessary data.

The satellite radio mode will be skipped unless an optional satellite receiver and antenna are installed and an XM® satellite radio service subscription is active. Satellite radio is not available in Alaska, Hawaii and Guam.

Satellite radio performance may be affected if cargo carried on the roof blocks the satellite radio signal.

If possible, do not put cargo over the satellite antenna.

A build up of ice on the satellite radio antenna can affect satellite radio performance. Remove the ice to restore satellite radio reception

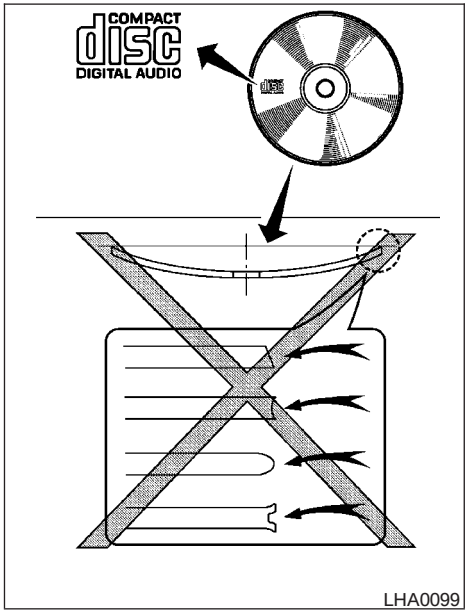

AUDIO OPERATION PRECAUTIONS

Compact disc (CD) player

⚠ CAUTION

- **Do not force a compact disc into the CD insert slot. This could damage the CD and/or CD changer/player.**
- **Trying to load a CD with the CD door closed could damage the CD and/or CD changer.**
- **Only one CD can be loaded into the CD player at a time.**

- **Only use high quality 4.7 in (12 cm) round discs that have the "COMPACT disc DIGITAL AUDIO" logo on the disc or packaging.**
- **During cold weather or rainy days, the player may malfunction due to the humidity. If this occurs, remove the CD and dehumidify or ventilate the player completely.**
- **The player may skip while driving on rough roads.**
- **The CD player sometimes cannot function when the compartment temperature is extremely high or low. Decrease/increase the temperature before use.**
- **Do not expose the CD to direct sunlight.**
- **CDs that are in poor condition or are dirty, scratched or covered with fingerprints may not work properly.**
- **The following CDs may not work properly:**
  - **Copy control compact discs (CCCD)**
  - **Recordable compact discs (CD-R)**
  - **Rewritable compact discs (CD-RW)**
- **Do not use the following CDs as they may cause the CD player to malfunction:**
  - **3.1 in (8 cm) discs with an adapter**
  - **CDs that are not round**
  - **CDs with a paper label**
  - **CDs that are warped, scratched, or have abnormal edges**
- **This audio system can only play prerecorded CDs. It has no capability to record or burn CDs.**
- **If the CD cannot be played, one of the following messages will be displayed.**

CHECK DISC:

- **Confirm that the CD is inserted correctly (the label side is facing up, etc.).**
- **Confirm that the CD is not bent or warped and it is free of scratches.**

PRESS EJECT:

This is an error due to excessive temperature inside the player. Remove the CD by pressing the EJECT button. After a short time, reinsert the CD. The CD can be played when the temperature of the player returns to normal.

UNPLAYABLE:

The file is unplayable in this audio system (only MP3 CD).

CompactFlash™ (CF) player

- Do not force a CF card into the slot. This could damage the CF card and/or player.
- During cold weather or rainy days, the player may malfunction due to the humidity. If this occurs, remove the CF card and dehumidify or ventilate the player completely.
- The CF player sometimes cannot function when the passenger compartment temperature is extremely high. Decrease the temperature before use.
- Do not expose a CF card to direct sunlight.
- Confirm that a CF card is inserted correctly.

Compact Disc (CD)/CompactFlash™ (CF) with MP3 or WMA

Terms:

- MP3 — MP3 is short for Moving Pictures Experts Group Audio Layer 3. MP3 is the most well-known compressed digital audio file format. This format allows for near "CD quality" sound, but at a fraction of the size of normal audio files. MP3 conversion of an audio track from CD/CF can reduce the file size by approximately 10:1 ratio (Sampling: 44.1 kHz, Bit rate: 128 kbps) with virtually no perceptible loss in quality. MP3 compression removes the redundant and irrelevant parts of a sound signal that the human ear doesn't hear.
- WMA — Windows Media Audio (WMA)* is a compressed audio format created by Microsoft as an alternative to MP3. The WMA codec offers greater file compression than the MP3 codec, enabling storage of more digital audio tracks in the same amount of space when compared to MP3s at the same level of quality.
- Bit rate — Bit rate denotes the number of bits per second used by a digital music file. The size and quality of a compressed digital audio file is determined by the bit rate used when encoding the file.
- Sampling frequency — Sampling frequency is the rate at which the samples of a signal are converted from analog to digital (A/D conversion) per second.
- Multisession — Multisession is one of the methods for writing data to media. Writing data once to the media is called a single session, and writing more than once is called a multisession.
- ID3/WMA Tag — The ID3/WMA tag is the part of the encoded MP3 or WMA file that contains information about the digital music file such as song title, artist, album title, encoding bit rate, track time duration, etc. ID3 tag information is displayed on the Album/Artist/Track title line on the display.

* Windows® and Windows Media® are registered trademarks and trademarks of the Microsoft Corporation in the United States of America and/or other countries.

CompactFlash™ is a trademark of the SanDisk® Corporation in the United States of America and/or other countries.

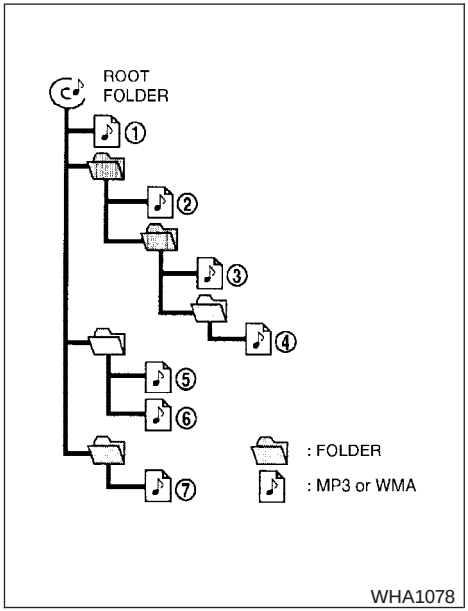

Playback order chart

Playback order:

Music playback order of a CD/CF with MP3 or WMA files is as illustrated.

- The names of folders not containing MP3 or WMA files are not shown in the display.
- If there is a file in the top level of the disc, “Root Folder” is displayed.
- The playback order is the order in which the files were written by the writing software. Therefore, the files might not play in the desired order.

Specification chart:

Supported media			CD, CD-R, CD-RW, CF
Supported file systems			CD, CD-R, CD-RW: ISO9660 LEVEL1, ISO9660 LEVEL2, Apple ISO, Romeo, Joliet * ISO9660 Level 3 (packet writing) is not supported.
			CompactFlash card: FAT12, FAT16, FAT32
Supported versions*1	MP3	Version	MPEG1, MPEG2, MPEG2.5
		Sampling frequency	8 kHz - 48 kHz
		Bit rate	8 kbps - 320 kbps, VBR*4
	WMA*2	Version	WMA7, WMA8, WMA9
		Sampling frequency	32 kHz - 48 kHz
		Bit rate	32 kbps - 192 kbps, VBR*4
Tag information			ID3 tag VER1.0, VER1.1, VER2.2, VER2.3, VER 2.4 (MP3 only)
			WMA tag (WMA only)
Folder levels			Folder levels: 8, Folders: 255 (including root folder), Files: 512 (Max. 255 files for one folder)
Text character number limitation			128 characters
Displayable character codes*3			01: ASCII, 02: ISO-8859-1, 03: UNICODE (UTF-16 BOM Big Endian), 04: UNICODE (UTF-16 Non-BOM Big Endian), 05: UNICODE (UTF-8), 06: UNICODE (Non-UTF-16 BOM Little Endian)

*1 Files created with a combination of 48 kHz sampling frequency and 64 kbps bit rate cannot be played.

*2 Protected WMA files (DRM) cannot be played.

*3 Available codes depend on what kind of media, versions and information are going to be displayed.

*4 When VBR files are played, the playback time may not be displayed correctly.

Troubleshooting guide:

Symptom	Cause and Countermeasure
Cannot play	Check if the CD/CF was inserted correctly.
	Check if the CD/CF is scratched or dirty.
	Check if there is condensation inside the player. If there is, wait until the condensation is gone (about 1 hour) before using the player.
	If there is a temperature increase error, the player will play correctly after it returns to the normal temperature.
	If there is a mixture of music CD files (CD-DA data) and MP3/WMA files on a CD, only the music CD files (CD-DA data) will be played.
	Files with extensions other than “.MP3”, “.WMA”, “.mp3” or “.wma” cannot be played. In addition, the character codes and number of characters for folder names and file names should be in compliance with the specifications.
	Check if the disc or the file is generated in an irregular format. This may occur depending on the variation or the setting of MP3/WMA writing applications or other text editing applications.
	Check if the finalization process, such as session close and disc close, is done for the disc.
	Check if the CD/CF is protected by copyright.
Poor sound quality	Check if the CD/CF is scratched or dirty.
It takes a relatively long time before the music starts playing.	If there are many folders or file levels on the MP3/WMA CD/CF, or if it is a multisession disc, some time may be required before the music starts playing.
Music cuts off or skips	The writing software and hardware combination might not match, or the writing speed, writing depth, writing width, etc., might not match the specifications. Try using the slowest writing speed.
Skipping with high bit rate files	Skipping may occur with large quantities of data, such as for high bit rate data.
Moves immediately to the next song when playing	When a non-MP3/WMA file has been given an extension of “.MP3”, “.WMA”, .“mp3”or “.wma”, or when play is prohibited by copyright protection, the player will skip to the next song.
Songs do not play back in the desired order	The playback order is the order in which the files were written by the writing software. Therefore, the files might not play in the desired order.

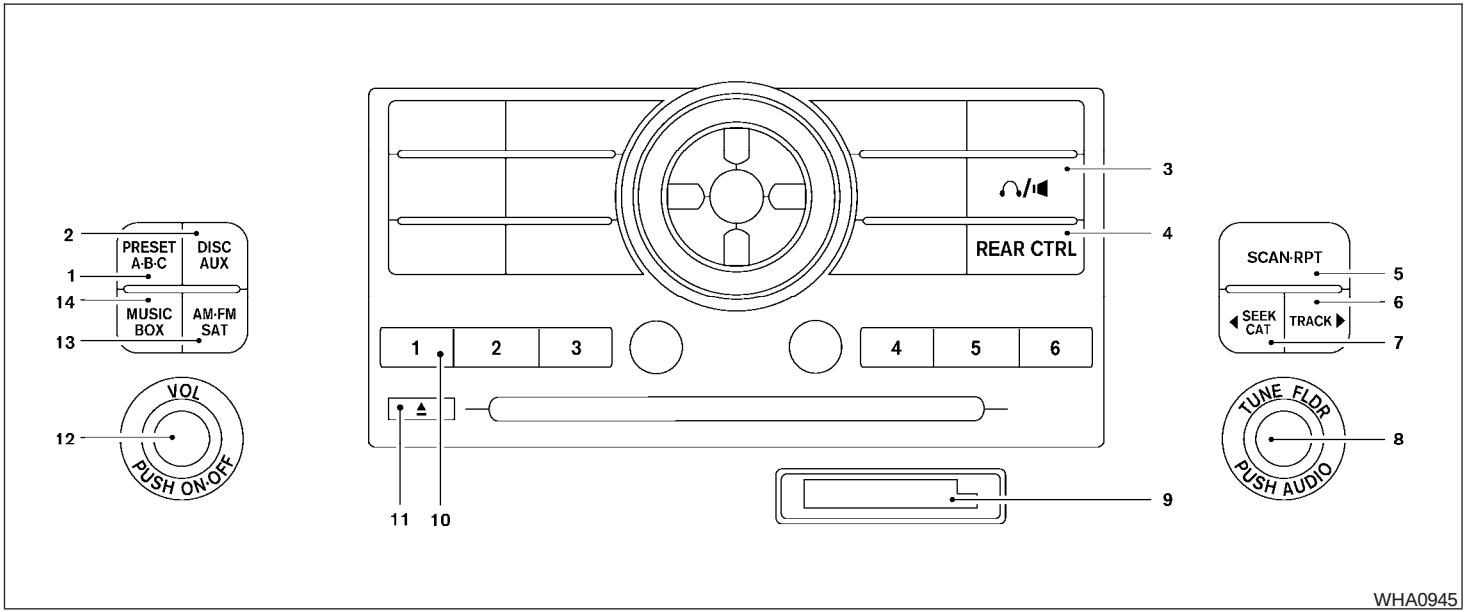

1. PRESET A·B·C button
2. DISC/AUX button
3. speaker control button
4. REAR CTRL button
5. SCAN·RPT button
6. TRACK button
7. SEEK/CAT button
8. TUNE/FLDR and AUDIO control knob
9. CompactFlash™ insert slot
10. Station select (1 - 6) buttons
11. ⏏ CD eject button
12. VOL/ON·OFF control knob
13. AM·FM/SAT button*
14. MUSIC BOX button

*When the AM·FM/SAT button is pressed, the satellite radio mode will be skipped unless an optional satellite receiver and antenna are installed and an XM® satellite radio service subscription is active. Satellite radio is not available in Alaska, Hawaii and Guam.

FM/AM/SAT RADIO WITH COMPACT DISC (CD) PLAYER

For all operation precautions, see “Audio operation precautions” earlier in this section.

The satellite radio mode will be skipped unless an optional satellite receiver and antenna are installed and an XM® satellite radio service subscription is active. Satellite radio is not available in Alaska, Hawaii and Guam.

Audio main operation

VOL/ON·OFF control:

Turn the ignition key to ACC or ON, and then push the VOL/ON·OFF control knob while the system is off to call up the mode (radio or CD) which was playing immediately before the system was turned off.

To turn the system off, press the VOL/ON·OFF control knob.

Turn the VOL/ON·OFF control knob to adjust the volume.

This vehicle has Speed Sensitive Volume (SSV) for audio. The audio volume changes as the driving speed changes.

AUDIO control knob (Bass, Treble, Balance and Fade):

Press the AUDIO control knob to change the mode as follows:

Bass → Treble → Balance → Fade

To adjust Bass, Treble, Balance and Fade, press the AUDIO control knob until the desired mode appears in the display. Turn the Tuning knob to adjust Bass and Treble to the desired level. You can also use the Tuning knob to adjust Fader and Balance modes. Fader adjusts the sound level between the front and rear speakers and Balance adjusts the sound between the right and left speakers.

Once you have adjusted the sound quality to the desired level, press the AUDIO control knob repeatedly until the radio or CD display reappears. Otherwise, the radio or CD display will automatically reappear after about 10 seconds.

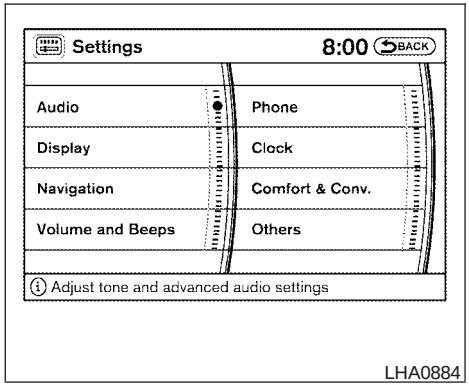

Speed Sensitive Volume (SSV):

To change the SSV mode from OFF (0) to 5, press the SETTING button. Then touch the “Audio” key, the audio settings screen will be displayed. Touch the “–” key or “+” key, to change the SSV.

While in this screen you can also adjust the other audio settings by touching the corresponding key.

Once you have adjusted the sound quality to the desired level, touch the “BACK” key.

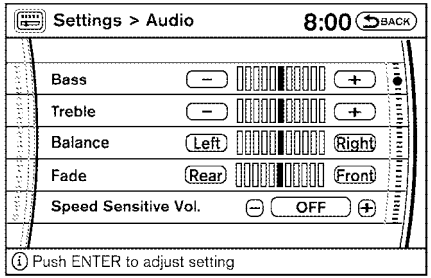

LHA0900

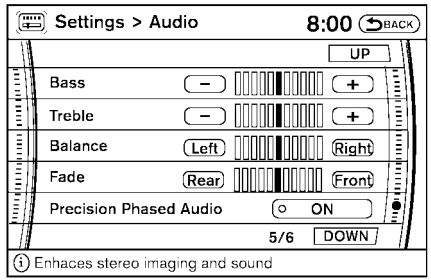

WHA0942

Precision phased audio (if so equipped):

To turn on or off the precision phased audio, press the SETTING button. Then touch the “Audio” key; the audio settings screen will be displayed. Touch the “Precision Phased Audio ON” key. If the amber indicator light is displayed, the precision phased audio is enabled. Touching the “Precision Phased Audio ON” key again will turn off the precision phased audio; the indicator light will disappear.

When this item is turned on, super high pitch sound and super low pitch sound are emphasized and midrange sound is played naturally.

While in this screen, you can also adjust the other audio settings by touching the corresponding key.

Once you have adjusted the sound quality to the desired level, touch the “BACK” key.

Clock set

For setting the clock, see “Clock” earlier in this section.

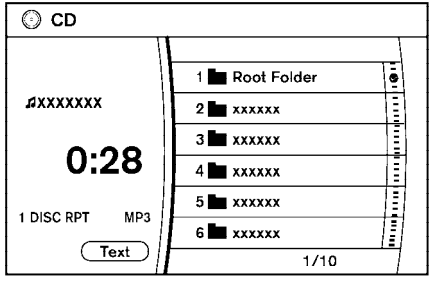

WHA0949

CD/MP3 display mode

While listening to a CD or an MP3/WMA CD certain text might be able to be displayed (when CD encoded with text is being used).

Depending on how the CD or MP3/WMA CD is encoded the following text might be able to be displayed by touching the “Text” key:

- Folder displays the name of the current folder being accessed.
- File displays the name of the file currently playing.
- Song displays the ID3 encoded tag of the song name.

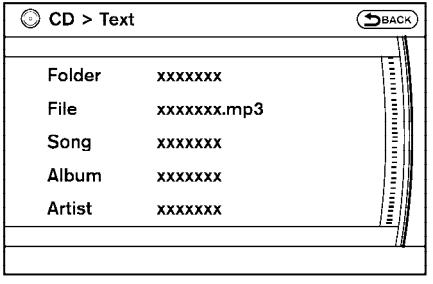

WHA0950

- Album displays the ID3 encoded tag of the album name.
- Artist displays the ID3 encoded tag of the artist’s name.
- Disc displays the disc name of the CD currently playing.
- Track displays the name of the song on the CD currently playing.

Some of this text or modes might not display while playing a regular CD. Press the BACK button to exit the CD text display screen.

FM/AM/SAT radio operation

FM/AM/SAT band select:

Pressing the RADIO AM·FM button will change the band as follows:

AM ⟷ FM or SAT* (satellite, if so equipped)

When the RADIO AM·FM button is pressed while the ignition switch is in the ACC or ON position, the radio will come on at the station last played.

The last station played will also come on when the VOL/ON·OFF control knob is pressed ON.

*When the RADIO AM·FM button is pressed, the satellite radio mode will be skipped unless an optional satellite receiver and antenna are installed and an XM® satellite radio service subscription is active. Satellite radio is not available in Alaska, Hawaii and Guam.

If a compact disc is playing when the RADIO AM·FM button is pressed, the compact disc will automatically be turned off and the last radio station played will come on.

The FM stereo indicator ST will illuminate during FM stereo reception. When the stereo broadcast signal is weak, the radio will automatically change from stereo to monaural reception.

TUNE/FLDR (Tuning) knob:

To manually tune the radio, turn the TUNE/FLDR knob to the right or left.

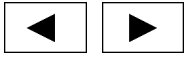

SEEK/CAT and TRACK tuning buttons:

Press the SEEK/CAT ◀ button or the TRACK ▶ button for less than 1.5 seconds to tune from high to low or low to high frequencies and stop at the next broadcasting station.

SCAN·RPT (SCAN tuning) button:

Press the SCAN·RPT button to initiate scan tuning. Scan tuning will stop at each broadcasting station for 5 seconds. Press the SCAN·RPT button again during this 5 second period to stop scan tuning; the radio will remain tuned to that station. If the SCAN·RPT button is not pressed within 5 seconds, scan tuning moves to the next station.

PRESET A·B·C (Station memory operations):

18 stations can be set for the FM, AM and SAT (satellite, if so equipped) radio to the A, B and C preset button in any combination of FM, AM or SAT stations.

1. Choose preset bank A, B or C using the PRESET A·B·C select button.
2. Select the desired FM, AM or SAT station band.
3. Tune to the desired station using manual, SEEK or SCAN tuning. Press and hold any of the desired station memory buttons (1 – 6) until a beep sound is heard.
4. The channel indicator will then come on and the sound will resume. Programming is now complete.
5. Other buttons can be set in the same manner.

If the battery cable is disconnected, or if the fuse opens, the radio memory will be canceled. In that case, reset the desired stations.

Radio data system (RDS):

RDS stands for Radio Data System, and is a data information service transmitted by some radio stations on the FM band (not AM band). Currently, most RDS stations are in large cities, but many stations are now considering broadcasting RDS data.

RDS can display:

- Station call sign, such as “WHFR 98.3”.
- Station name, such as “The Groove”.
- Music or programming type such as “Classical”, “Country”, or “Rock”.
- Artist and song information.

If the station broadcasts RDS information, the RDS icon is displayed.

Compact disc (CD) player operation

Turn the ignition key to the ACC or ON position and insert the compact disc into the slot with the label side facing up. The compact disc will be guided automatically into the slot and start playing.

If the radio is already operating, it will automatically turn off and the compact disc will play.

If the system has been turned off while the compact disc was playing, pressing the VOL/ON·OFF control knob will start the compact disc.

DISC/AUX button:

When the DISC/AUX button is pressed with the system off and the compact disc loaded, the system will turn on and the compact disc will start to play.

When the DISC/AUX button is pressed with the compact disc loaded but the radio playing, the radio will automatically be turned off and the compact disc will start to play.

SEEK/CAT and TRACK buttons:

When the SEEK/CAT ◀ button is pressed while a compact disc is playing, the track being played returns to its beginning. Press several times to skip back through tracks. The compact disc will go back the number of times the button is pressed.

When the TRACK ▶ button is pressed while the compact disc is playing, the next track will start to play from its beginning. Press several times to skip through tracks. The compact disc will advance the number of times the button is pressed. (When the last track on the compact disc is skipped through, the first track will be played.)

The INFINITI controller can also be used to select tracks when a CD is being played.

SEEK/CAT and TRACK (Rewind·Fast Forward) buttons:

Press and hold the SEEK/CAT ◀ (rewind) button or the TRACK ▶ (fast forward) button while a compact disc is playing; the compact disc will play while rewinding or fast forwarding. When the button is released, the compact disc will return to normal play speed.

When the CD button is pressed with the system off and the compact disc loaded the system will turn on and the compact disc will start to play.

When the CD button is pressed with the compact disc loaded with the tape or the radio playing, the tape or radio will automatically be turned off and the compact disc will start to play.

TUNE FLDR (Folder) knob

While playing an MP3/WMA CD, turn the TUNE/FLDR knob right or left to scan forward or backward through available folders.

SCAN·RPT (random and repeat) button:

When the SCAN·RPT button is pressed while the compact disc is being played, the play pattern can be changed as follows:

CD:

1 DISC RPT → 1 TRK RPT → 1 DISC RDM → 1 DISC RPT

MP3/WMA CD:

1 DISC RPT → 1 FOLDER RPT → 1 TRK RPT → 1 DISC RDM → 1 FOLDER RDM → 1 DISC RPT

1 DISC RPT: the entire disc will be repeated.
1 TRK RPT: the current track playing will be repeated.
1 DISC RDM: all tracks will be played randomly.
1 FOLDER RPT: the folder currently being accessed will be repeated.
1 FOLDER RDM: the tracks in the current folder being accessed will be played randomly.

REAR CTRL:

Pressing the REAR CTRL button turns the rear seat audio controller on. Rear Controls UNLOCKED will display. Pressing the REAR CTRL button again will turn the rear seat audio controller off. Rear Controls LOCKED will display. If the vehicle is not equipped with a rear seat audio controller, the display will show “Rear Controls Not Available”.

Press and hold the REAR CTRL button for approximately 1.5 seconds to turn on the rear display screen on. Rear Display ON will display. Press and hold the REAR CTRL button again will turn the rear display screen off. Rear Display OFF will display. If the vehicle is not equipped with a rear display screen, the display will show “Rear Controls Not Available”.

(SPEAKER CONTROL) button:

Press the button to turn the rear speakers off and the headphones on. Press this button again to turn rear seat speakers back on and the headphones off.

CD EJECT button:

When the button is pressed with the compact disc loaded, the compact disc will be ejected.

When button is pressed while the compact disc is being played, the compact disc will eject and the system will turn off.

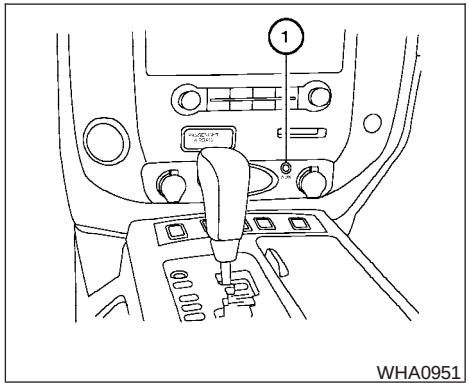

AUX jack

The AUX jack ① is located below the air conditioner controls. The AUX audio input jack accepts any standard analog audio input, such as from a portable cassette tape player, MP3 player or a laptop computer.

Press the DISC/AUX button to play a compatible device when it is plugged into the AUX jack.

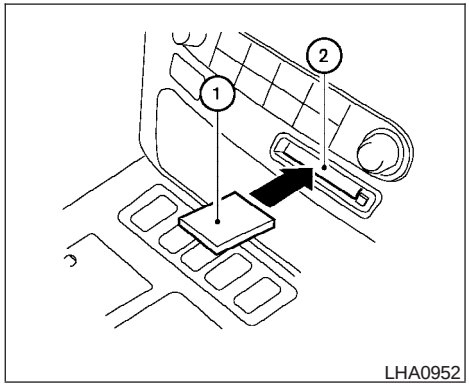

COMPACTFLASH™ (CF) PLAYER OPERATION

Place the ignition switch in the ACC or ON position, and insert a CF card ① into the CompactFlash™ player slot ②. Then press the DISC/AUX button repeatedly to switch to the CompactFlash™ mode.

If the system has been turned off while the CompactFlash™ card was playing, pressing the VOL/ON·OFF control knob will start the CompactFlash™ card.

DISC/AUX button:

When the DISC/AUX button is pressed with the system off and the CF card inserted, the system will turn on. If another audio source is playing and a CF card is inserted, press the DISC/AUX button repeatedly until the center display changes to the CompactFlash™ mode.

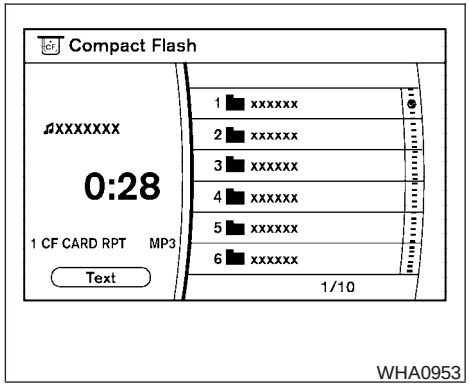

CF display mode

While listening to CF certain text might be able to be displayed.

Depending on how the files are encoded on the CF the following text might be able to be displayed by touching the “Text” key:

- Folder displays the name of the current folder being accessed.
- File displays the name of the file currently playing.
- Song displays the ID3 encoded tag of the song name.

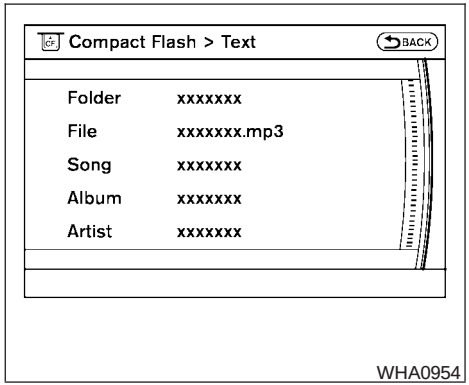

- Album displays the ID3 encoded tag of the album name.
- Artist displays the ID3 encoded tag of the artist’s name.

Press the BACK button to exit the CF text display screen.

SEEK/CAT and TRACK buttons:

Press the ◀ SEEK/CAT button or the ▶ TRACK button while the CF card is being played, the next track or the beginning of the current track on the CF will be played.

Press and hold the ◀ SEEK/CAT (rewind) button or the ▶ TRACK (fast forward) button for more than approximately 1.5 seconds, the CF card will play while rewinding or fast forwarding. When the ◀ SEEK/CAT (rewind) button or the ▶ TRACK (fast forward) button is released, the CF card will return to the normal playing speed.

The INFINITI controller can also be used to select tracks when the CF card is being played.

For more information on how to use the INFINITI controller, see “How to use the INFINITI controller” earlier in this section.

Folder selection:

To change to another folder in the CF card either:

- Turn the TUNE/FLDR knob right or left.
- Touch the desired folder key on screen.
- Use the INFINITI controller.

SCAN·RPT button:

Pressing the SCAN·RPT button while the CF card is playing, the play pattern can be changed as follows:

1 CF CARD RPT → 1 FOLDER RPT → 1 TRK RPT → 1 CF CARD RDM → 1 FOLDER RDM → 1 CF CARD RPT

1 CF CARD RPT: the entire CF card will be repeated.
1 FOLDER RPT: the folder currently being accessed will be repeated.
1 TRK RPT: the current track playing will be repeated.
1 CF CARD RDM: all the tracks on the CF card will be played randomly.
1 FOLDER RDM: the tracks in the current folder being accessed will be played randomly.

CF eject:

Press the knob next to the CF slot while a CF card is inserted, the CF card will be ejected.

Troubleshooting messages:

The following messages will be displayed under certain conditions:

- Reading CompactFlash™
  The system is reading the CF card inserted in the slot.
- No CompactFlash™ card
  A CF card is not inserted in the slot.
- CompactFlash™ read error
  The system cannot read the CF card.
- Unplayable file
  The system cannot play a music file.
- No audio file
  The CF card inserted in the slot or its folder does not contain any music files.

Compatibility with other media:

If a commercially available CompactFlash™ adapter is inserted into the slot, other memory media can also be used.

MUSIC BOX HARD-DISK DRIVE AUDIO SYSTEM

The Music Box hard-disk drive audio system can store songs from CDs being played. The system has a 9.3 gigabyte (GB) storage capacity and can record up to 200 hours (approximately 2,900 songs).

The following CDs can be recorded in the Music Box hard-disk drive audio system:

- CDs without MP3/WMA files.
- Hybrid Compact Disc Digital Audio (Hybrid CD-DA) specification in Super Audio CDs.

- Compact Disc Digital Audio (CD-DA) specification in CD-Extras.
- First session of multisession disc.

Extreme temperature conditions [below −4°F (−20°C) and above 158°F (70°C)] could affect the performance of the hard disk.

NOTE:

If the hard disk needs to be replaced due to a malfunction, all stored music data will be erased.

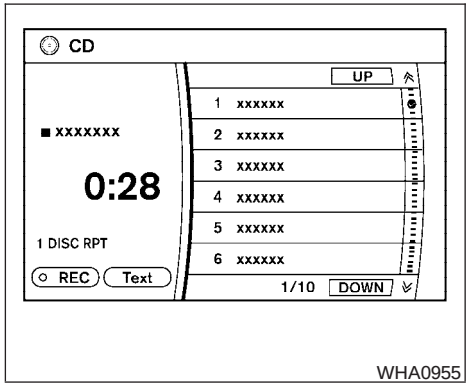

WHA0955

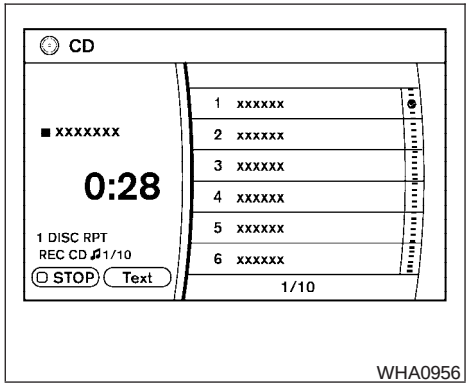

WHA0956

Recording songs

1. Operate the audio system to play a CD. For information on playing CDs, see “Compact Disc (CD) player operation” earlier in this section.
2. Touch the “REC” key.

The system starts recording the track being played and REC CD appears on the screen.

If the title information of the track being recorded is stored either in the hard-disk drive or in the CD, the title is automatically displayed on the screen. For title acquisition from the hard-disk drive, music recognition technology and related data are provided by Gracenote®.

To view the details of the track, touch the “Text” key on the screen or use the INFINITI controller and press the ENTER button. The track name and album title are displayed on the screen.

If a track is not recorded successfully due to skipping sounds, the ⊘ symbol is displayed behind the track number.

The Music Box audio system cannot perform recording under the following conditions:

- There is not enough space in the hard disk.

- The number of albums reaches the maximum of 500.
- The number of tracks reaches the maximum of 3,000.

Automatic recording:

If the “Automatic Recording” function is turned to ON, recording starts when a CD is inserted. For more information, see “Music Box settings” later in this section.

Stopping recording:

To stop the recording, touch the “STOP” key on the screen. If the CD is ejected, the audio system is turned off or the ignition switch is turned to the OFF position, the recording also stops.

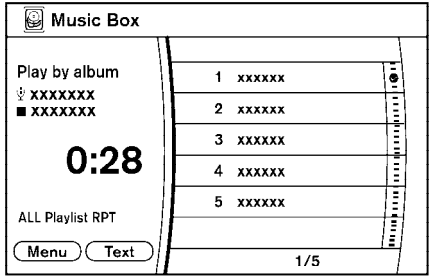

WHA0957

Playing recorded songs

Select the Music Box audio system by using one of the following methods:

- Press the mode select switch on the steering wheel.
  For information, see “Steering wheel switch for audio control” later in this section.
- Press the MUSIC BOX button.
- Give voice commands.
  For information, see “INFINITI Voice Recognition system” later in this section.

Stopping playback:

The system stops playing when:

- Another mode (radio, CD, CompactFlash™ or AUX) is selected.
- The audio system is turned off.
- The ignition switch is turned to the OFF position.

SEEK/CAT and TRACK buttons:

Press the ◄ SEEK/CAT button or the ► TRACK button while a track is being played; the next track or the beginning of the current track will be played.

Press and hold the ◄ SEEK/CAT (rewind) button or the ► TRACK (fast forward) button for more than approximately 1.5 seconds; the track will play while rewinding or fast forwarding. When the ◄ SEEK/CAT (rewind) button or the ► TRACK (fast forward) button is released, the track will return to the normal playing speed.

The INFINITI controller can also be used to select tracks.

For more information on how to use the INFINITI controller, see “How to use the INFINITI controller” earlier in this section.

SCAN·RPT button:

Pressing the SCAN·RPT button while a track is playing, the play pattern can be changed as follows:

ALL Playlist RPT → 1 Playlist RPT → 1 TRK RPT → ALL Playlist RDM → 1 Playlist RDM → ALL Playlist RPT

ALL Playlist RPT: the entire playlist will be repeated.
1 Playlist RPT: the playlist currently being played will be repeated.
1 TRK RPT: the current track playing will be repeated.
ALL Playlist RDM: all the tracks in the playlist will be played randomly.
1 Playlist RDM: the tracks in the current playlist will be played randomly.

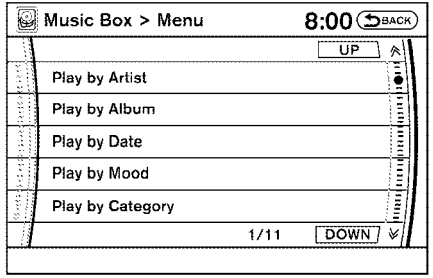

LHA0958

Music Box menu

There are some options available during playback. Touch the “Menu” key, then select one of the following that are displayed on the screen, if necessary. Refer to the following information for each item:

- **Play by Artist**
  Plays songs by an artist whose music is currently being played. The artists are sorted in alphabetical order.
- **Play by Album**
  Plays tracks in each album. The albums are sorted in alphabetical order.

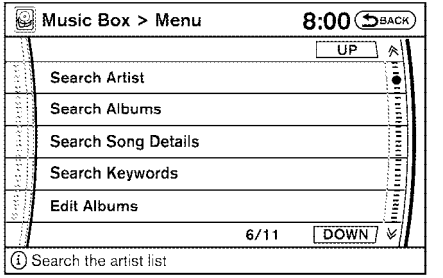

LHA0959

- **Play by Date**
  Plays tracks in each album. The albums are sorted in order of the date when they were stored in the system.
- **Play by Mood**
  Plays music from one of the following moods:
  - Relaxing Music
  - Lively Music
  - Slow Music
  - Upbeat Music

- **Play by Category**
  Plays music from one of the following categories:
  - My Favorites
  - Hit Songs
  - Kids' Songs
  - Rarely Played
- **Search Artists**
  Displays a list of artists in alphabetical order. Selecting an artist displays all of the tracks by the artist and starts playing the first track.

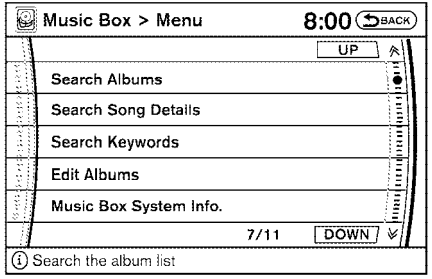

LHA0960

- **Search Albums**
  Displays a list of albums in order of the date when they were stored in the system. Selecting an album displays all of the tracks on the album and starts playing the first track.
  Touch the "Sort" key to re-sort albums in one of the following order:
  - Rec. (Recorded) Date
  - Name
  - Release Year
  - Artist
- **Search Song Details**
  Set the conditions and touch the "Start Song Search" key to search for a desired song that is stored in the system. The conditions are as follows:
  - Music Tempo (All, Slow, Normal and Fast)
  - Decade (All, '70s, '80s, '90s, '00s, '10s and After)
  - Group (All, Male Artist, Female Artist, Group and Duo)
  - Category (Rock, Pop, Latin, Jazz, R&B, Hip Hop, Club/Dance, Punk, Reggae, Folk, Blues, Country, Metal, Easy Listening, New Age, Soundtrack, Gospel & Religious, World, Classical, Children's and Other)
- **Search Keywords**
  Input a search keyword using the keypad displayed on the screen.
  For information, see "How to use the touch screen" earlier in this section.
- **Edit Albums**
  Select a category (Rec. (Recorded) Date, Name, Released Year and Artist) and edit the details using the keypad displayed on the screen.
  For information, see "How to use the touch screen" earlier in this section.

- **Music Box System Info.**
  Displays the following information about the Music Box audio system:
  - Music Box Used / Free Space
    Information about Saved Album, Saved Track and Remaining Time is displayed.
  - Mood Categories
    Number of saved tracks and their categories Relaxing Music, Lively Music, Slow Music, Upbeat Music and Others are displayed.
  - Deleted Items
    Information about the deleted tracks is displayed.
  - Search Missing Titles
    If titles are not displayed for CDs that have been recorded, titles can be acquired using one of the following methods:
    - **Retrieve from HDD**
      Searches the title using the database in the hard-disk.
    - **Retrieve from CF**
      Searches the title from the information acquired on the Internet.
- **Transfer Missing Titles to CF**
  Transfers the information of the album recorded without titles to a Compact-Flash™ card. Visit www.infiniti.com/music-update/ for details.
  - Music Box Settings
    For information, see “Music Box settings” later in this section.
  - CDDB Version
    The version of the built-in Gracenote® Database is displayed.

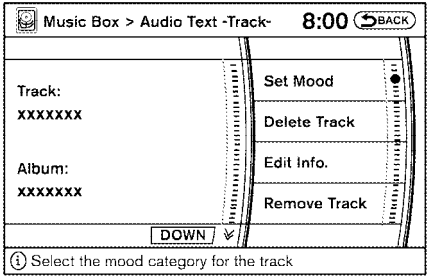

LHA0961

Music Box text display:

While listening to a track in the Music Box audio system you can view certain text. Touch the “Text” key to display the following information for each item:

- **Set Mood**
  Set the mood category of the track to “Relaxing Music”, “Lively Music”, “Slow Music” or “Upbeat Music”.
- **Delete Track**
  Delete the track being played.

- **Edit Info.**
  Edit the name of the track being played and its artist using the keypad displayed on the screen.
  For information, see “How to use the touch screen” earlier in this section.
  The category of the track can also be set to Rock, Pop, Latin, Jazz, R&B, Hip Hop, Club/Dance, Punk, Reggae, Folk, Blues, Country, Metal, Easy Listening, New Age, Soundtrack, Gospel & Religious, World, Classical, Children’s and Others.
- **Remove Track**
  Reset the mood setting of a track.

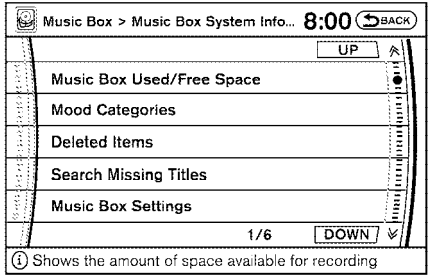

LHA0962

Restoring deleted data

Deleted music data can be restored by performing the following:

1. Touch the “Menu” key and then the touch the “Music Box System Info.” key on the screen.
2. Touch the “Deleted Items” key and then the “Album/Track” key.
3. Touch the “Restore Album/Track” key to restore the deleted music data.

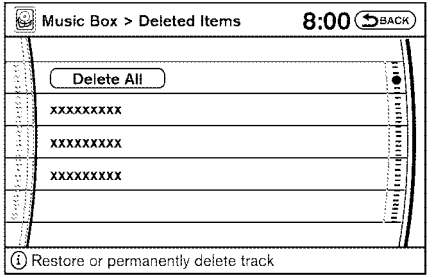

LHA0964

You can also listen to the beginning of each track that has been deleted by performing the following:

1. Touch the “Menu” key and then the “Music Box System Info.” key on the screen.
2. Touch the “Deleted Items” key and then the “Play Sample” key.

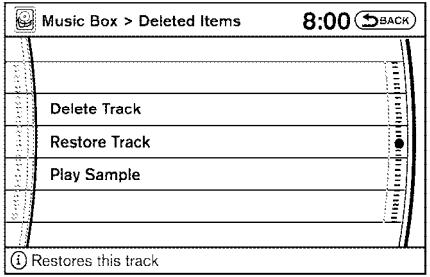

LHA0965

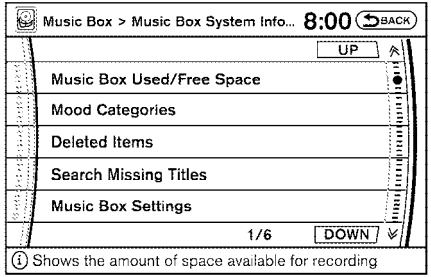

LHA0962

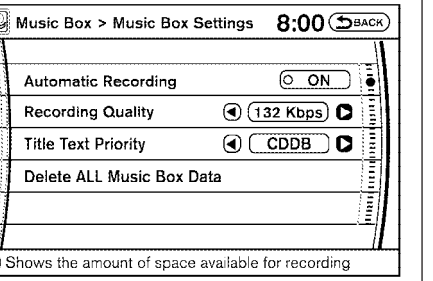

LHA0963

Music Box settings

To set up the Music Box hard-disk drive audio system to your preferred settings, touch the “Menu” key during playback, then touch the “Music Box System Info.” key, and then the “Music Box Settings” key.

- **Automatic Recording:**
  When this item is turned to ON, the Music Box hard-disk audio system automatically starts recording when a CD is inserted.
- **Recording Quality:**
  Set the recording quality of 105 kbps or 132 kbps. The default is set to 132 kbps.
- **Title Text Priority:**
  Set the priority to CDDB (Compact Disc Data Base) to acquire track information from the Gracenote® Database or set to CD TEXT to acquire the information from CDs.
- **Delete ALL Music Box Data:**
  Delete all music data stored on the hard disk.

Gracenote®

NOTE:

- The information contained in the Gracenote® Database is not fully guaranteed.
- The service of the Gracenote® Database on the Internet may be stopped without prior notice for maintenance.

gracenote

End-User License Agreement

USE OF THIS PRODUCT IMPLIES ACCEPTANCE OF THE TERMS BELOW.

Gracenote® MusicID™ Terms of Use

This device contains software from Gracenote, Inc. of Emeryville, California ("Gracenote"). The software from Gracenote (the "Gracenote Software") enables this application to do online disc identification and obtain music-related information, including name, artist, track, and title information ("Gracenote Data") from online servers ("Gracenote Servers") and to perform other functions. You may use Gracenote Data only by means of the intended End-User functions of this device.

You agree that you will use Gracenote Data, the Gracenote Software, and Gracenote Servers for your own personal non-commercial use only. You agree not to assign, copy, transfer or transmit the Gracenote Software or any Gracenote Data to any third party. YOU AGREE NOT TO USE OR EXPLOIT GRACENOTE DATA, THE GRACENOTE SOFTWARE, OR GRACENOTE SERVERS, EXCEPT AS EXPRESSLY PERMITTED HEREIN.

You agree that your non-exclusive license to use the Gracenote Data, the Gracenote Software, and Gracenote Servers will terminate if you violate these restrictions. If your license terminates, you agree to cease any and all use of the Gracenote Data, the Gracenote Software, and Gracenote Servers. Gracenote reserves all rights in Gracenote Data, the Gracenote Software, and the Gracenote Servers, including all ownership rights. Under no circumstances will Gracenote become liable for any payment to you for any information that you provide. You agree that Gracenote, Inc. may enforce its rights under this Agreement against you directly in its own name.

The Gracenote MusicID Service uses a unique identifier to track queries for statistical purposes. The purpose of a randomly assigned numeric identifier is to allow the Gracenote MusicID service to count queries without knowing anything about who you are. For more information, see the web page for the Gracenote Privacy Policy for the Gracenote MusicID Service.

The Gracenote Software and each item of Gracenote Data are licensed to you "AS IS." Gracenote makes no representations or warranties, express or implied, regarding the accuracy of any Gracenote Data from in the Gracenote Servers. Gracenote reserves the right to delete data from the Gracenote Servers or to change data categories for any cause that Gracenote deems sufficient. No warranty is made that the Gracenote Software or Gracenote Servers are error-free or that functioning of Gracenote Software or Gracenote Servers will be uninterrupted. Gracenote is not obligated to provide you with new enhanced or additional data types or categories that Gracenote may provide in the future and is free to discontinue its online services at any time.

GRACENOTE DISCLAIMS ALL WARRANTIES EXPRESS OR IMPLIED, INCLUDING, BUT NOT LIMITED TO, IMPLIED WARRANTIES OF MERCHANTABILITY, FITNESS FOR A PARTICULAR PURPOSE, TITLE, AND NONINFRINGEMENT. GRACENOTE DOES NOT WARRANT THE RESULTS THAT WILL BE OBTAINED BY YOUR USE OF THE GRACENOTE SOFTWARE OR ANY GRACENOTE SERVER. IN NO CASE WILL GRACENOTE BE LIABLE FOR ANY CONSEQUENTIAL OR INCIDENTAL DAMAGES OR FOR ANY LOST PROFITS OR LOST REVENUES.

Copyright:

Music recognition technology and related data are provided by Gracenote®. Gracenote is the industry standard in music recognition technology and related content delivery. For more information visit www.gracenote.com.

CD and music-related data from Gracenote, Inc., copyright © 2000-2006 Gracenote. Gracenote Software, copyright © 2000-2006 Gracenote. This product and service may practice one or more of the following U.S. Patents: #5,987,525; #6,061,680; #6,154,773, #6,161,132, #6,230,192, #6,230,207, #6,240,459, #6,330,593, and other patents issued or pending. Some services supplied under license from Open Globe, Inc. for U.S. Patent: #6,304,523. Gracenote and CDDB are registered trademarks of Gracenote. The Gracenote logo and logotype, and the "Powered by Gracenote" logo are trademarks of Gracenote.

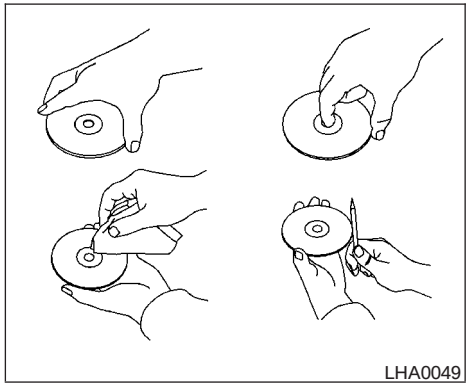

CD/CF (CompactFlash™) CARE AND CLEANING

CD:

- Handle a CD by its edges. Do not bend the disc. Never touch the surface of the disc.
- Always place the discs in the storage case when they are not being used.
- To clean a disc, wipe the surface from the center to the outer edge using a clean, soft cloth. Do not wipe the disc using a circular motion.
- Do not use a conventional record cleaner or alcohol intended for industrial use.
- A new disc may be rough on the inner and outer edges. Remove the rough edges by rubbing the inner and outer edges with the side of a pen or pencil as illustrated.

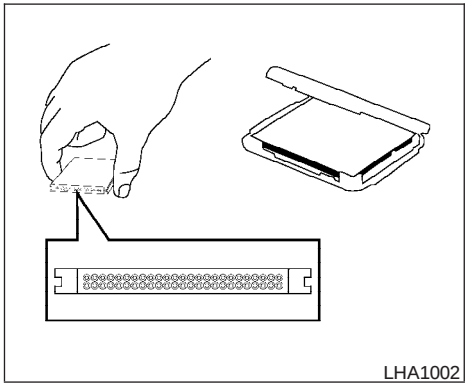

CF cards:

⚠ CAUTION

Do not force the CompactFlash™ card into the CompactFlash™ player slot. Forcing the CF card could damage the pins inside the CF player slot, especially if the CF card is upside down or backwards.

- Never touch the terminal portion of the CompactFlash™ cards. Do not bend the cards.
- Always place the cards in the storage case when they are not being used.
- Do not place heavy objects on the cards.
- Do not store the cards in highly humid locations.
- Do not expose the cards to direct sunlight.
- Do not spill any liquids on the cards.

Refer to the CompactFlash™ card Owner's Manual for more details.

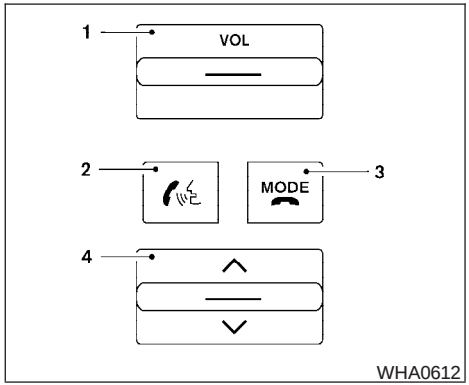

1. Volume control switch
2. Phone operation switch
3. POWER on and MODE select switch
4. Tuning switch

STEERING WHEEL SWITCH FOR AUDIO CONTROL

The audio system can be operated using the controls on the steering wheel.

POWER on switch

With the ignition key turned to the ACC or ON position, push the POWER switch to turn the audio system on.

MODE select switch

Push the mode select switch to change the mode in the following sequence: PRESET A → PRESET B → PRESET C → Music Box** → CD* → CompactFlash™* → DVD* (if so equipped) → AUX***.

*These modes are only available when compatible media storage is inserted into the device.

**This mode is only available when music has been downloaded into the Music Box hard-disk drive audio system.

***This mode is only available when a compatible auxiliary device is plugged into the AUX jack.

Volume control switch

Push the volume control switch up or down to increase or decrease the volume.

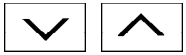

Tuning

Memory change (radio):

While in one of the preset radio station banks (A, B or C), push the tuning switch ∨ or ∧ for less than 1.5 seconds to change to the next preset station in memory.

Seek tuning (radio):

Push the tuning switch ∨ or ∧ for more than 1.5 seconds to seek the next or previous radio station.

Next/Previous track (CD/CF):

Push the tuning switch ∨ or ∧ for less than 1.5 seconds to return to the beginning of the present track or skip to the next track. Push several times to skip back or skip through tracks.

This system searches for the blank intervals between selections. If there is a blank interval within 1 program or there is no interval between programs, the system may not stop in the desired or expected location.

Next/Previous track (Music Box):

Push the tuning switch ∨ or ∧ for less than 1.5 seconds to return to the beginning of the present track or skip to the next track. Push several times to skip back or skip through tracks.

Push and hold the tuning switch ∨ or ∧ for more than 1.5 seconds to change playlists. When the last playlist is playing, the next playlist will be selected.

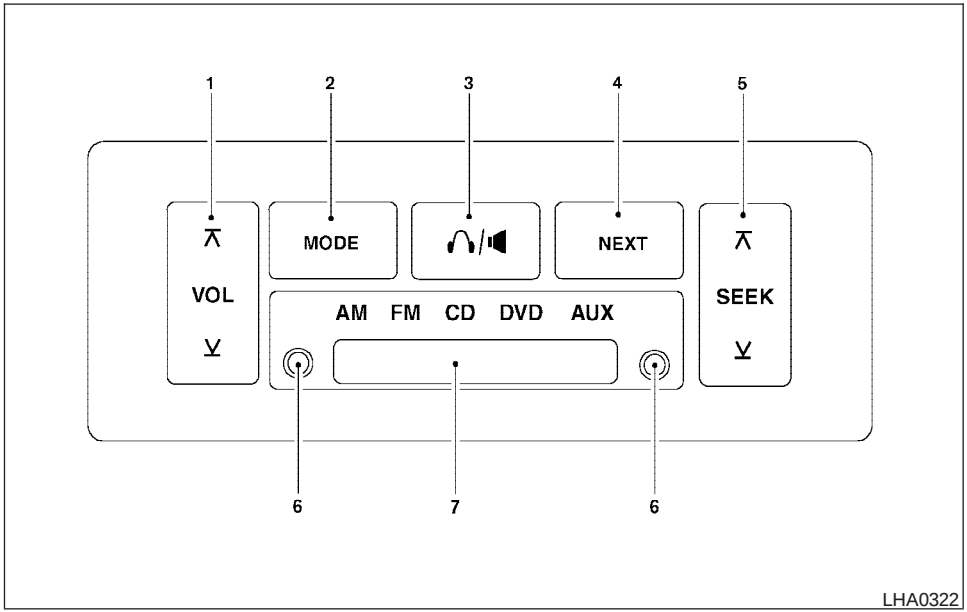

1. VOL (volume) control button
2. MODE select button
3. speaker control button
4. NEXT button
5. SEEK button
6. Headphone jacks
7. Infrared headphone transmitter lens*

*Red transmitters will be visible when infrared headphones are on.

REAR AUDIO CONTROLS

Press the REAR CTRL button on the front radio control panel to turn the rear controls on. Press the button again to turn the rear controls off.

Press the button; the headphones symbol illuminates on the front display when the headphones are on. Two headphone jacks are provided so two rear seat passengers may listen to the audio system privately.

One or two infrared headphones are included if the vehicle is equipped with the DVD entertainment system. Most portable radio headphones work with the rear audio controls.

For vehicles equipped with the FM/AM/SAT radio with compact disc player, if the rear passengers turn off the rear speakers and are using headphones they may choose to listen to a different media than the front passengers. The rear passengers can listen to the radio along with the front passengers or they can listen to a CD.

VOL (volume) button:

The VOL button allows the rear passengers to adjust the headphone volume level. The vehicle volume can also be changed if the REAR CTRL is enabled and the rear audio mode is the same as the front.

(SPEAKER CONTROL) button:

Press this button to turn the rear speakers off and headphones on. Press this button again to turn rear seat speakers back on and headphones off.

MODE button:

The MODE button allows the rear passengers to change between AM, FM, CD, DVD and AUX. The media options are listed on the face plate of the rear audio controls. When a source of media is selected, the media label will be illuminated.

SEEK button:

In AM or FM mode, the SEEK button allows the rear seat passengers to find the next radio station up or down the station band frequency.

In CD mode, the SEEK button allows the rear passengers to find the next or previous selection on the CD.

NEXT button:

When the NEXT button is pressed while in AM or FM mode, the radio will change to the next preset.

The NEXT button does not function while in SAT radio mode or when playing a DVD or CD.

ANTENNA

Window antenna

The antenna pattern is printed inside the rear passenger and driver side windows.

CAUTION

- **Do not place metalized film near the rear driver or passenger side window glass or attach any metal parts to it. This may cause poor reception or noise.**
- **When cleaning the inside of the rear driver or passenger side window, be careful not to scratch or damage the window antenna. Lightly wipe along the antenna with a dampened soft cloth.**

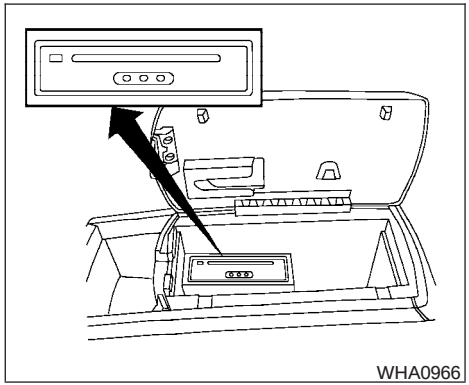

This vehicle is equipped with the mobile entertainment system, which enables you to play a Digital Versatile Disc (DVD), providing the images and sounds both in the front and rear display screens.

⚠ WARNING

- **The driver must not attempt to operate or view the Mobile Entertainment System while the vehicle is in motion so that full attention may be given to vehicle operation.**
- **Do not attempt to modify the system to display a movie on the front screen while the vehicle is being driven. Doing so may distract the driver and may cause a collision and serious personal injury or death.**

⚠ CAUTION

- **The glass screen on the liquid crystal display may break if hit with a hard or sharp object. If the glass breaks, do not touch the liquid crystalline material, which contains a small amount of mercury. In case of contact with skin, wash immediately with soap and water.**
- **Use a damp, soft cloth when cleaning the Mobile Entertainment System components. Do not use solvents or cleaning solutions.**

Do not attempt to use the system in extreme temperature conditions [below -4°F (-20°C) or above 158°F (70°C)].

To avoid discharging the vehicle battery, do not operate the system more than 15 minutes without starting the engine.

Movies will not be shown on the front display while the vehicle is in any drive position to reduce driver distraction. Audio is available when a movie is played. To view movies in the front display, stop the vehicle in a safe location, move the shift selector lever to the P (Park) position and apply the parking brake.

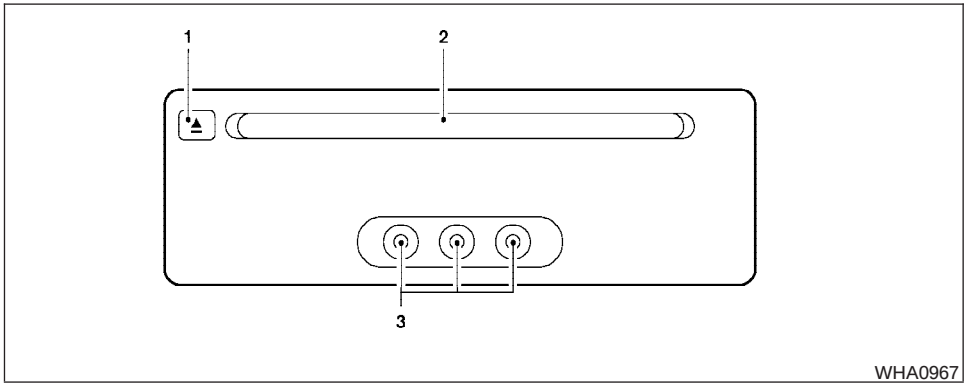

1. EJECT button
2. DVD slot
3. Auxiliary input jack

DIGITAL VIDEO DISC (DVD) PLAYER CONTROLS

1. ⏏ **EJECT button:**
   When the ⏏ button is pressed with the DVD loaded, it will be ejected.
   The display will show the eject symbol in the upper left corner of the display for 4 seconds once the ⏏ button is pressed.
   If the DVD is not loaded, the display will show “NO DISC”.
   If the DVD comes out and is not removed within 25 seconds, it will be pulled back into the slot to protect it.

2. **DVD slot:**
   Insert a DVD into the slot with the label side facing up. The DVD will be guided automatically into the slot.

3. **Auxiliary input jack:**
   For information, see “DVD auxiliary input jacks” later in this section.

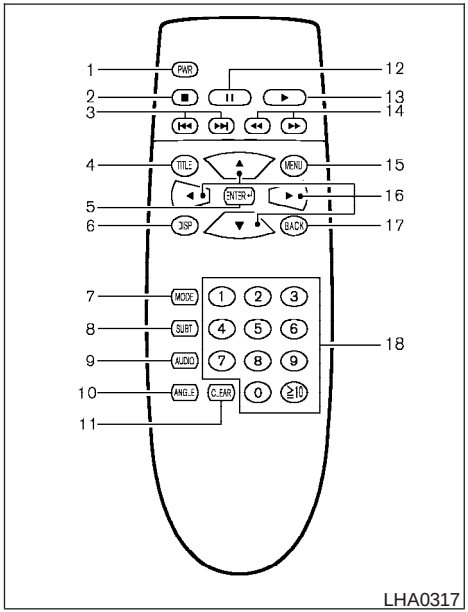

1. POWER button
2. STOP button
3. NEXT TRACK/CHAPTER and PREVIOUS TRACK/CHAPTER button
4. TITLE button
5. ENTER button
6. DISPLAY button
7. MODE button
8. SUBTITLE button
9. AUDIO button
10. ANGLE button
11. CLEAR button
12. PAUSE button
13. PLAY button
14. FAST FORWARD/FAST REVERSE button
15. MENU button
16. NAVIGATION keys
17. BACK button
18. NUMERIC KEYPAD

REMOTE CONTROL

Refer to “Remote control operation” later in this section for the function of each button.

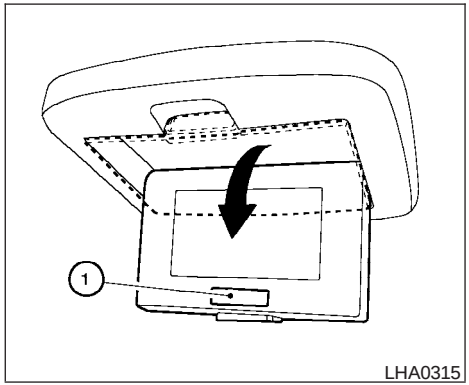

FLIP-DOWN SCREEN

The flip-down screen has a wireless remote control receiver ① located at the bottom of the screen.

⚠ CAUTION

- **The glass screen on the liquid crystal display may break if hit with a hard or sharp object. If the glass breaks, do not touch the liquid crystalline material, which contains a small amount of mercury. In case of contact with skin, wash immediately with soap and water.**
- **The screen rotates down to view and up into the housing to store when not in use. Ensure that the screen is latched securely into the housing when stored.**

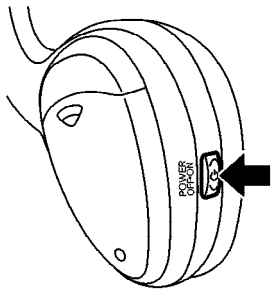

SAA0720

Headphones

Power ON/OFF:

Press the power button to turn the headphones on or off.

Volume control:

Turn the volume control knob to adjust the volume.

The headphones will automatically be turned off in 30 seconds if there is no sound during that period. To prevent the battery from being discharged, keep the power supply turned off when not in use.

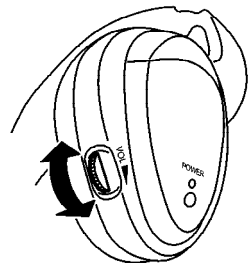

SAA0721

NOTE:

For optimum infrared headphone performance, increase the volume on the rear seat controller to the maximum level and adjust the infrared headphone volume using the volume control on the headphones. Using a lower volume setting on the rear seat controller can cause static noise in the infrared headphones.

BEFORE OPERATING THE DVD MOBILE ENTERTAINMENT SYSTEM

Precautions

Start the engine when using the DVD entertainment system.

⚠ WARNING

The driver must not attempt to operate the DVD System or wear the headphones while the vehicle is in motion so that full attention may be given to vehicle operation.

⚠ CAUTION

- **Only operate the DVD while the vehicle engine is running. Operating the DVD for extended periods of time with the engine OFF can discharge the vehicle battery.**
- **Do not allow the system to get wet. Excessive moisture such as spilled liquids may cause the system to malfunction.**

While playing VIDEO-CD media, this DVD player does not guarantee complete functionality of all VIDEO-CD formats.

Copyright and trademark

- The technology protected by the U.S. patent and other intellectual property rights owned by Macrovision Corporation and other right holders is adopted for this system.
- This copyright protected technology cannot be used without a permit from Macrovision Corporation. It is limited to be personal use, etc., as long as the permit from Macrovision Corporation is not issued.
- Modifying or disassembling is prohibited.
- Dolby digital is manufactured under license from Dolby Laboratories, Inc.
- Dolby and the double D mark are trademarks of Dolby Laboratories, Inc.
- DTS and DTS Digital Surround are registered trademarks of Digital Theater Systems, Inc.

Parental level (parental control)

DVDs with the parental control setting can be played with this system. Please use your own judgement to set the parental control with the system.

Disc selection

You can play the following disc formats with the DVD drive:

- DVD-VIDEO
- VIDEO-CD
- CD-DA (Conventional Compact Disc) (CD with MP3/WMA cannot be played.)

Use DVDs with a region code 1; DVDs with region code ALL or 1 will operate in the DVD entertainment system. The region code is displayed as a small symbol printed on the top of the DVD. This vehicle-installed DVD player cannot play DVDs with a region code other than 1 or ALL.

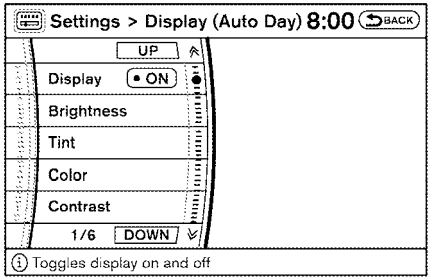

WHA0968

Display settings

Front display:

To adjust the front display mode, press the SETTING button while the DVD is being played, select the “Display” key with the INFINITI controller, and then press the ENTER button. To adjust the display ON/OFF, brightness, tint, color, contrast and black level select each key using the INFINITI controller and press the ENTER button. Then you can adjust each item using the INFINITI controller. After changes have been made press the BACK button to save the settings.

Rear display:

To adjust the rear display mode, press the DISP (Display) button on the remote controller.

To adjust the display brightness, tint, color and contrast, select each key using the joystick on the remote controller and tilt the joystick to right or left.

Press the BACK button to apply the settings and return to the previous display

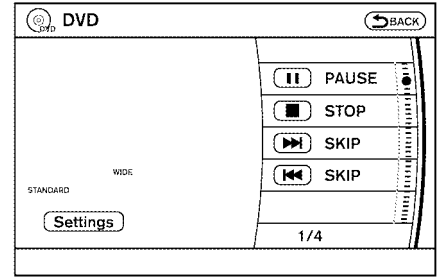

LHA0972

PLAYING A DIGITAL VERSATILE DISC (DVD)

With the DVD player, you can hear DVD videos, video CDs and CDs using headphones. Passengers in the rear seat can enjoy the sound independently of the front seat.

Press the DISC/AUX button located on the front controls to hear the sound of the DVD play through the speakers.

Press the REAR CTRL button located on the front controls to disable or enable rear seat audio controls. For more information on rear seat audio controls see, “Rear Audio Controls” earlier in this section.

Pressing the button on the front controls turns the rear speakers on or off and enables or disables the wireless headphones .

It is possible to operate the DVD player by remote control.

Headphones are a wireless type and no cables are necessary. You can use them in almost all the ranges in the rear seat. (It is not possible to use the headphones in the front seat.)

DISC/AUX button

Park the vehicle in a safe location and apply the parking brake for the front seat occupants to operate the DVD drive while watching the images.

Press the DISC/AUX button on the instrument panel and turn the display to the DVD mode.

When a DVD is loaded, it will be replayed automatically.

The operation screen will be turned on when the DISC/AUX button located on the instrument panel is pressed while a DVD is being played, and it will turn off automatically after a period of time. To turn it on again, press the DISC/AUX button once more.

DVD operation keys

To operate the DVD drive, touch the preferred key or select the preferred key displayed on the operation screen using the INFINITI controller.

PAUSE key:

Touch the " ⏸ " PAUSE key to pause the DVD. To resume playing the DVD, touch the " ▶ "PLAY key.

To pause the DVD, it is also possible to press the ⏸ button on the keypad of the remote controller.

PLAY key:

Touch the " ▶ " PLAY key to start playing the DVD, for example, after pausing the DVD

To start playing the DVD, it is also possible to press the ▶ button on the keypad of the remote controller.

STOP key:

Touch the " ■ " STOP key to stop playing the DVD.

To stop playing the DVD, it is also possible to press the ■ button on the keypad of the remote controller.

SKIP (forward) key:

Touch the " ▶▶| " SKIP key to skip the chapter(s) of the disc forward. The chapters will advance the number of times the " ▶▶| " SKIP key is touched.

Touch and hold the " ▶▶| " SKIP key for more than 1.5 seconds to fast forward the disc. When the " ▶▶| " SKIP key is released the disc will be played normally.

To skip the chapter(s) forward, it is also possible to press the ▶▶| button on the keypad of the remote controller.

SKIP (rewind) key:

Touch the " |◀◀ " SKIP key to skip the chapter(s) of the disc backward. The chapters will go back the number of times the " |◀◀ " SKIP key is touched.

Touch and hold the " |◀◀ " SKIP key for more than 1.5 seconds to rewind the disc. When the " |◀◀ " SKIP key is released the disc will be played normally.

To skip the chapter(s) backward, it is also possible to press the |◀◀ button on the keypad of the remote controller.

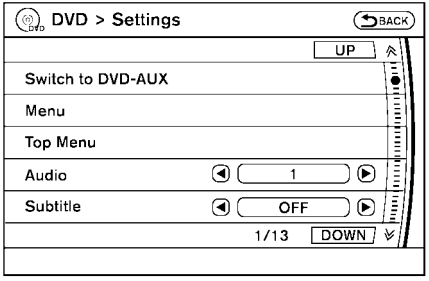

LHA0969

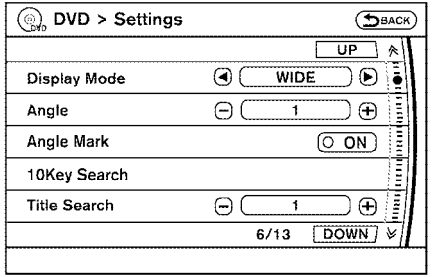

LHA0970

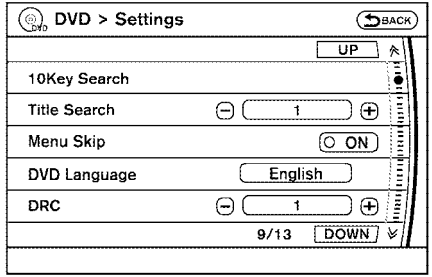

LHA0971

DVD settings

Touch the “Settings” key to adjust the following settings while playing a DVD.

When all the changes have been made, press BACK button to save all the settings.

Switch to DVD-AUX:

Switch the output source from the DVD drive to another device connected to the auxiliary input jacks located on the DVD player.

For more information, see “DVD auxiliary input jacks” later in this section.

Menu:

Some menus specific to each DVD will be shown. For details, see the instructions attached to the DVD.

Top Menu:

Each title menu in the disc will be shown. For details, see the instructions attached to the DVD.

Audio:

Some audio tracks specific to each DVD will be shown. For details, see the instructions attached to the DVD.

Subtitle:

Choose the preferred DVD subtitle language by touching the “ ◀ ” key or the “ ▶ ” key.

Display Mode:

Choose from the Full, Wide, Normal or the Cinema mode by touching the “ ◀ ” key or the “ ▶ ” key.

Angle:

If the DVD contains different angles (such as moving images), the current image angle can be switched to another one.

Choose a different angle by touching the “–” key or the “+” key; the angle will change if available.

Angle Mark:

When this item is turned on, an angle mark will be shown on the bottom of the screen if the scene can be seen from a different angle. Touch the “ON” key to enable the angle mark; the indicator light will illuminate.

10Key Search:

Touch the “10Key Search” key to open the number entry screen. Input the number you want to search for and touch the “OK” key. The specified Title/Chapter or Group/Track will be played.

Title Search:

The scene with the specified title will be displayed the number of times the “–” key or the “+” key is touched.

Menu Skip:

DVD menus are automatically configured and the contents will be played directly when the “Menu Skip” key is turned on. Note that some discs may not be played directly even if this item is turned on.

DVD Language:

Touch the “DVD Language” key to open the number entry screen. Input the number corresponding to the preferred language and touch the “OK” key. The DVD top menu language will be changed to the one specified.

DRC:

DRC (Dynamic Range Compression) allows you to tune the dynamic range of the sound recorded in the Dolby® Digital format. Touch the “–” key or the “+” key to tune the DRC.

DVD auxiliary input jacks

The auxiliary input jacks are located on the front of the DVD player which is located inside the center console. NTSC and PAL compatible devices such as video games, camcorders and portable video players can be connected to the auxiliary jacks.

The auxiliary jacks are color coded for identification purposes.

- Yellow - video input
- White - left channel audio input
- Red - right channel audio input

Before connecting a device to a jack, power off the portable device and turn off the DVD player.

To view something connected to the auxiliary input jacks, press the DISC/AUX button until the DVD mode appears, then touch the “Settings” key. Then touch the “Switch to DVD-AUX” key. The screen will change to the DVD-AUX mode.

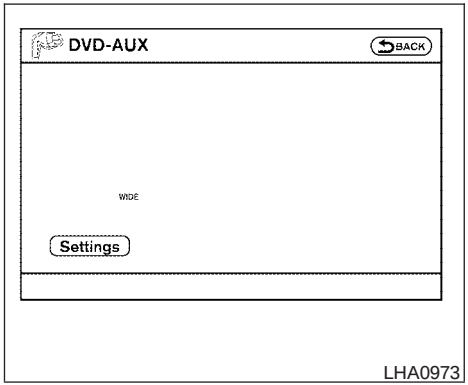

DVD-AUX settings

Touch the “Settings” key to adjust the following settings:

- Switch to DVD:
  Touch this key to switch back to the DVD mode.
- Video Format:
  If the auxiliary source is in a different video format, touch the “ ◀ ” key or the “ ▶ ” key, the video format will change.

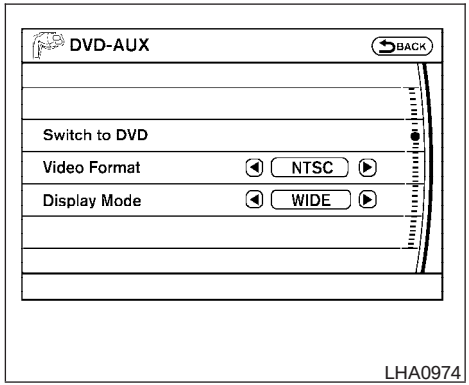

- Display Mode:
  Choose from the Full, Wide, Normal or Cinema mode by touching the “ ◀ ” key or the “ ▶ ” key.

When all the changes have been made, press the BACK button to save all the settings.

REMOTE CONTROL OPERATION

For all operation precautions, see “Before operating the DVD Mobile Entertainment System” earlier in this section.

The DVD system can also be controlled by using the remote controller in the rear seats. See the following items.

PWR on/off button:

With the ignition switch turned to the ACC or ON position, press the PWR button to turn the DVD rear display on or off.

NOTE:

The PWR button on the remote control only turns the rear display on or off.

Insert the DVD into the slot with the label side facing up. The DVD will be guided automatically into the slot.

If the DVD player is off and a DVD is inserted, the DVD player will automatically turn on.

⚠ CAUTION

Do not force the compact disc into the slot. This could damage the player.

MODE select button:

Press the MODE button to select Audio/Video source between DVD and AUX input (input jacks on the faceplate, Red = right channel audio input, White = left channel audio input, and Yellow = Video input).

The display will show the “AUX” in the upper left corner of the display for 4 seconds once the Mode is changed to AUX.

To use the input jacks, refer to “Auxiliary input jacks” in this section.

PLAY:

When the ▶ PLAY button on the remote control is pressed, the player will play.

In play mode, the display will briefly show ▶ on the upper left corner of the display.

FF (Fast Forward), REW (Rewind):

Press ▶▶ (fast forward) / ◀◀ (Rewind) buttons to carry out the fast forward or rewind presentation at 5 times normal play speed.

Press ▶▶ (fast forward) / ◀◀ (Rewind) buttons again or PLAY button to resume the normal play speed.

NEXT CHAPTER/ PREVIOUS CHAPTER:

When the ▶▶| (NEXT CHAPTER) button is pressed while the DVD is being played, the program next to the present one will start to play from its beginning. Press several times to skip through programs. The DVD will advance the number of times the button is pressed. When the |◀◀ (PREVIOUS CHAPTER) button is pressed, the program being played returns to its beginning. Press several times to skip back through programs. The DVD will go back the number of times the button is pressed.

PAUSE:

When the II PAUSE button on the remote control is pressed, the player will pause playing of the media. In pause mode, the player will show II on the upper left corner of the display until the player is changed to another mode.

STOP:

Press the STOP button once to stop playing the media. The display will show ■ in the upper left corner of the display for 4 seconds, and the last disc position will be stored. When the PLAY button is pressed again, it will resume at the stored disc track and time position.

If the STOP button is pressed again when the player is already in Stop mode, it will reinitialize the pointer to the beginning of the disc. In effect it will ignore the last stored disc position and upon receipt of the next play message it will begin at the Title Menu, or at “the beginning of the disc”.

DISPLAY:

If the DISPLAY control is pressed for less than 2 seconds, the display menu will appear on the screen.

- The display menu will remain on the screen for 10 seconds if no subsequent control activations occur.
- Use NAVIGATION KEYS to navigate within the display menu, and use ENTER to select the item.

NAVIGATION KEYS:

If media is in activated MENU mode, the NAVIGATION KEYS will be used to navigate Up, Down, Left, and Right within the menu.

If display control menu is on, the NAVIGATION KEYS will be used to navigate Up, Down, Left, and Right within the menu.

ENTER:

In MENU mode, press the ENTER button to select MENU items.

In the display menu, press the ENTER button to select items for modification, as per the on-screen instructions.

MENU:

If the media is in PLAY mode and the MENU button is pressed, the DVD menu will appear on the screen. Use Navigation Keys to navigate within the menu, and use ENTER to select the item.

Press the MENU button again to return to PLAY mode.

TITLE:

Press TITLE button to return the DVD media to the “title” of the DVD.

Press TITLE button again to return to the previous stop point and play.

BACK:

Press the BACK button to exit the current active menu and return to the previous menu.

SUBTITLE:

Press the SUBTITLE button to call up subtitle selection menu.

Repeatedly press the SUBTITLE button to cycle through each available subtitle.

AUDIO:

Press the AUDIO button to call up audio menu.

Repeatedly press the AUDIO button to cycle through each available audio track.

ANGLE:

Press the ANGLE button to call up camera angle menu.

Repeatedly press the ANGLE button to cycle through each available angle.

CLEAR:

Press the CLEAR button to clear all numeric inputs, if actuated prior to expiration of the 3-second timer.

NUMERIC KEYPAD (0–9 & ≥10):

Press the NUMERIC KEYPAD to directly access disc chapters, titles or tracks by inputting their numeric value.

The “≥10” button input numbers greater than or equal to 10, allowing up three digits to be input for selecting chapter/title/track number.

The subsequent actuation of numeric buttons will continuously shift the previously input number to the “left”.

The chapter/title/track number will be automatically selected (if valid, based on media content) if 3 seconds expire without any keypad inputs.

The operator can cancel the input chapter/title/track number by actuating the CLEAR control prior to the expiration of the 3-second timer.

These functions can be used only for the DVD discs which correspond to them.

CARE AND MAINTENANCE

Use a lightly dampened, lint free cloth to clean the surfaces of your INFINITI Mobile Entertainment System (DVD player face, screen, remote control, etc.).

Do not attempt to use the system in extreme temperature conditions [below -4°F (-20°C) or above 158°F (70°C)].

Do not attempt to operate the system in extreme humidity conditions (less than 10% or more than 75%).

⚠ CAUTION

- **Do not use any solvents or cleaning solutions when cleaning the video system.**
- **Do not use excessive force on the monitor screen.**
- **Avoid touching or scratching the monitor screen as it may become dirty or damaged.**

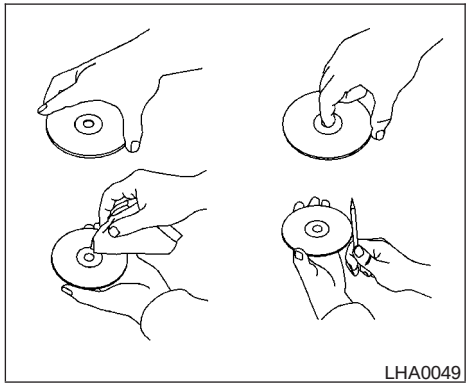

HOW TO HANDLE THE DVD

⚠ CAUTION

- **Handle a DVD by its edges. Never touch the surface of the disc.**
- **To clean a disc, wipe the surface from the center to the outer edge using a clean, soft cloth. Do not wipe the disc using a circular motion.**
- **Do not use a conventional record cleaner, benzine, thinner or alcohol intended for industrial use.**
- **A new disc may be rough on its inner and outer edges. Remove the rough edges using the side of a pen or pencil as illustrated.**
- **Never attempt to use a DVD that has been cracked, deformed, or repaired using adhesive. Doing so may cause damage to the equipment.**

- Handle the DVD carefully to avoid contamination or flaws. Otherwise, signals may not be read properly.
- Do not write, draw or attach anything on any side of the DVD.
- Do not store the DVD in locations with direct sunlight or in high temperatures or humidity.
- Always place discs in the storage case when they are not being used.
- Do not put on any sticker or write anything on either surface of the DVD.

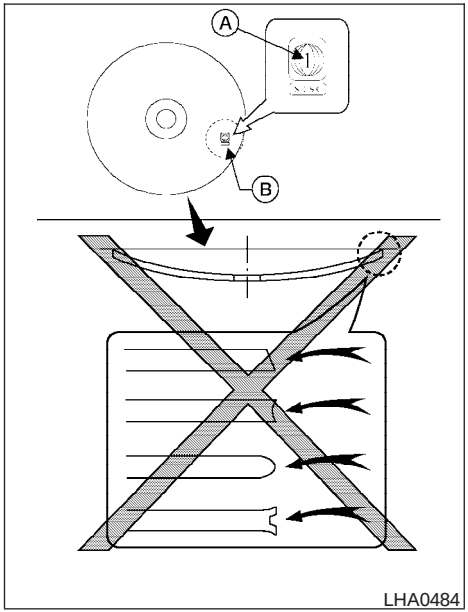

DVD player operation precautions

Do not use the following DVDs as they may cause the DVD player to malfunction:

- **3.1 in (8 cm) discs with an adapter.**
- **DVDs with a region code other than "1". The region code Ⓐ is displayed in a small symbol printed on the top of the DVD Ⓑ.**
- **DVDs that are not round.**
- **DVDs with a paper label.**
- **DVDs that are warped, scratched, or have unequal edges.**
- **Recordable digital video discs (DVD+R).**
- **Rewritable digital video discs (DVD+RW).**

If a DVD with a paper label is used and becomes jammed, you may be able to reset the unit and eject the jammed disc with the following procedure:

1. **Record the radio presets.**
2. **Disconnect the negative terminal from the battery for five minutes.**
3. **Reconnect the negative battery terminal.**
4. **Check to see if the jammed DVD has been ejected. If it has not, try to eject the DVD by pushing the eject button.**
5. **If the disc cannot be ejected see your INFINITI dealer for further assistance.**
6. **Re-program the radio presets.**

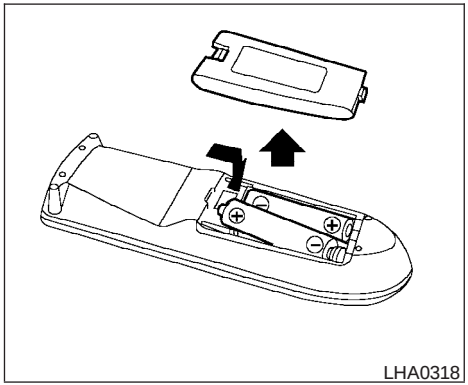

Remote control and headphones battery replacement

Replace the battery as follows:

1. Open the lid.
2. Replace batteries with new ones.

- Size AA (remote control)
- Size AAA (headphones)

Make sure that the ⊕ and ⊖ ends on the batteries match the markings inside the compartment.

3. Close the lid securely.

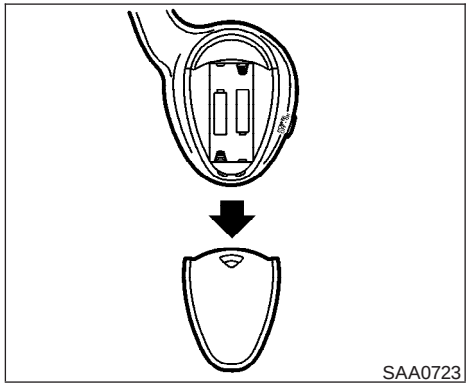

If the battery is removed for any reason other than replacement, close the lid securely.

- If you will not be using the remote control for long periods of time, remove the batteries.
- Replacement of the batteries is needed when the remote control only functions at extremely close distances to the DVD player or not at all.
- Be careful not to touch the battery terminal.
- An improperly disposed battery can harm the environment. Always confirm local regulations for battery disposal.
- When changing batteries, do not let dust or oil get on the remote control and headphones.

FCC Notice:

Changes or modifications not expressly approved by the party responsible for compliance could void the user's authority to operate the equipment. This device complies with Part 15 of the FCC Rules and RSS-210 of Industry Canada. Operation is subject to the following two conditions: (1) This device may not cause harmful interference, and (2) this device must accept any interference received, including interference that may cause undesired operation of the device.

CAR PHONE OR CB RADIO

When installing a CB, ham radio or car phone in your INFINITI, be sure to observe the following precautions, otherwise the new equipment may adversely affect the engine control system and other electronic parts.

⚠ WARNING

- **A cellular telephone should not be used while driving so full attention may be given to vehicle operation. Some jurisdictions prohibit the use of cellular telephones while driving.**
- **If you must make a call while your vehicle is in motion, the hands free cellular phone operational mode (if so equipped) is highly recommended. Exercise extreme caution at all times so full attention may be given to vehicle operation.**
- **If a conversation in a moving vehicle requires you to take notes, pull off the road to a safe location and stop your vehicle before doing so.**

⚠ CAUTION

- **Keep the antenna as far away as possible from the electronic control modules.**
- **Keep the antenna wire more than 8 in (20 cm) away from the electronic control system harnesses. Do not route the antenna wire next to any harness.**
- **Adjust the antenna standing-wave ratio as recommended by the manufacturer.**
- **Connect the ground wire from the CB radio chassis to the body.**
- **For details, consult an INFINITI dealer.**

BLUETOOTH® HANDS-FREE PHONE SYSTEM

⚠ WARNING

- **Use a phone after stopping your vehicle in a safe location. If you have to use a phone while driving, exercise extreme caution at all times so full attention may be given to vehicle operation.**
- **If you are unable to devote full attention to vehicle operation while talking on the phone, pull off the road to a safe location and stop your vehicle.**

⚠ CAUTION

To avoid discharging the vehicle battery, use a phone after starting the engine.

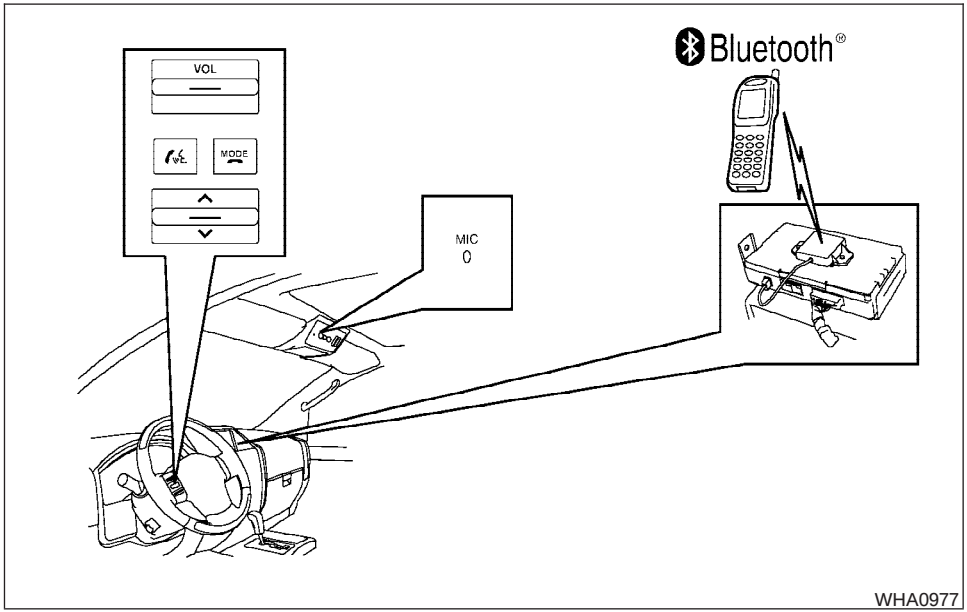

Your INFINITI is equipped with the Bluetooth® Hands-Free Phone System. If you have an approved Bluetooth® enabled cellular phone, you can set up the wireless connection between your cellular phone and the in-vehicle phone module. With Bluetooth® wireless technology, you can make or receive a hands-free telephone call with your cellular phone in the vehicle.

Once your cellular phone is paired to the in-vehicle phone module, no other phone connecting procedure is required. Your phone is automatically connected with the in-vehicle phone module when the ignition switch is turned to the ON position with the paired cellular phone turned on and carried in the vehicle.

You can register up to 5 different Bluetooth® cellular phones to the in-vehicle phone module. However, you can talk on only one cellular phone at a time.

INFINITI Voice Recognition system supports the phone commands, so dialing a phone number using your voice is possible. For more details, see “INFINITI Voice Recognition System” later in this section.

Before using the Bluetooth® Hands-Free Phone System, refer to the following notes.

- Set up the wireless connection between a cellular phone and the in-vehicle phone module before using the hands-free phone system.
- Some Bluetooth® enabled cellular phones may not be recognized by the in-vehicle phone module. Please visit www.infiniti.com/bluetooth for a recommended phone list and pairing.
- You will not be able to use a hands-free phone under the following conditions:
  - Your vehicle is outside of the cellular service area.

– Your vehicle is in an area where it is difficult to receive cellular signal; such as in a tunnel, in an underground parking garage, near a tall building or in a mountainous area.

– Your cellular phone is locked to prevent it from being dialed.

- When the radio wave condition is not ideal or ambient sound is too loud, it may be difficult to hear the other person's voice during a call.
- Immediately after the ignition switch is pushed to the ON position or the DVD-ROM for the navigation system is inserted into the player, it may be impossible to receive a call for a short period of time.
- Do not place the cellular phone in an area surrounded by metal or far away from the in-vehicle phone module to prevent tone quality degradation and wireless connection disruption.
- While a cellular phone is connected through the Bluetooth® wireless connection, the battery power of the cellular phone may discharge quicker than usual. The Bluetooth® Hands-Free Phone System cannot charge cellular phones.
- If the hands-free phone system seems to be malfunctioning, see "Troubleshooting guide" later in this section. You can also visit www.infiniti.com/bluetooth for troubleshooting help.
- Some cellular phones or other devices may cause interference or a buzzing noise to come from the audio system speakers. Storing the device in a different location may reduce or eliminate the noise.
- Refer to the cellular phone owner's manual regarding the telephone charges, cellular phone antenna and body, etc.
- The signal strength display on the monitor will not coincide with the signal strength display of some cellular phones.
- If reception between callers is unclear, adjusting the incoming or outgoing call volume may improve the clarity. See "Call volume" later in this section.

REGULATORY INFORMATION

FCC Regulatory information

– CAUTION: To maintain compliance with FCC's RF exposure guidelines, use only the supplied antenna. Unauthorized antenna, modification, or attachments could damage the transmitter and may violate FCC regulations.

– Operation is subject to the following two conditions:

1. This device may not cause interference and
2. this device must accept any interference, including interference that may cause undesired operation of the device.

IC Regulatory information

– Operation is subject to the following two conditions: (1) this device may not cause interference, and (2) this device must accept any interference, including interference that may cause undesired operation of the device.

– This Class B digital apparatus meets all requirements of the Canadian Interference-Causing Equipment Regulations.

Bluetooth®

BLUETOOTH® is a trademark owned by Bluetooth SIG, Inc., U.S.A. and licensed to Xanavi Informatics Corporation.

VOICE COMMANDS

You can use voice commands to operate various Bluetooth® Hands-Free Phone System features using the INFINITI Voice Recognition system. For more details, see “INFINITI Voice Recognition System” later in this section.

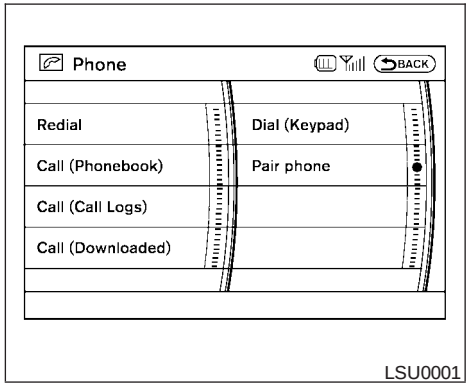

PAIRING PROCEDURE

1. Press the PHONE button on the instrument panel or the switch on the steering wheel, and select the “Pair phone” key on the display using the INFINITI controller. Then press the ENTER button.

NOTE:

If a phone is already paired with the system; Step 1. will not work. To pair another phone, press the SETTING button, then select the “Phone” key and press the ENTER button. Scroll to the bottom of the list and select the “Bluetooth Setup” key and press the ENTER button. Select the “Pair Phone” key, and press the ENTER button then follow the instructions in Step 2.

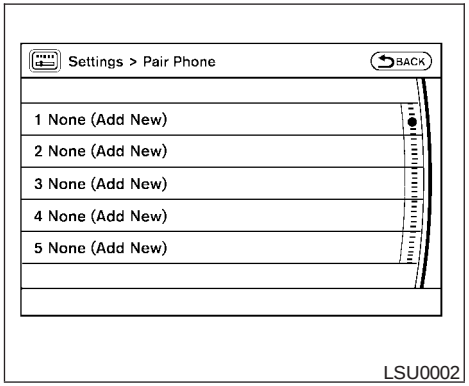

2. Select the “None (Add New)” key from the name list of the phones, and press the ENTER button.

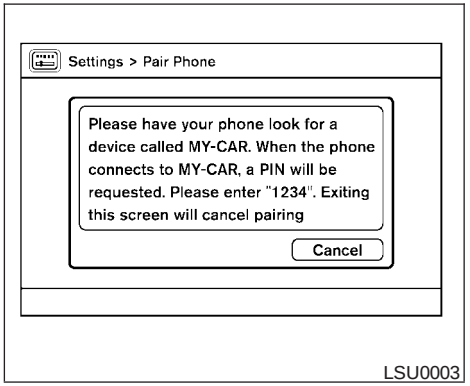

3. When a PIN code appears on the screen, operate the Bluetooth® cellular phone to enter the PIN code.

   The pairing procedure of the cellular phone varies according to each cellular phone. See the cellular phone Owner’s Manual for the details. You can also visit www.infiniti.com/bluetooth. You can also call INFINITI Consumer Affairs Department for instructions on pairing recommended cellular phones.

   When the pairing is completed, the screen will return to the Bluetooth® setup display.

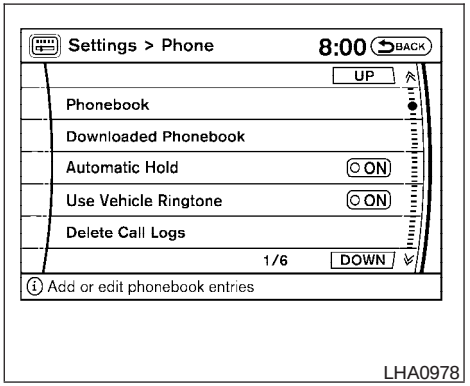

PHONEBOOK

Up to 40 phone numbers can be stored in the phonebook.

1. Press the SETTING button, then select the “Phone” key and press the ENTER button.
2. Select the “Phonebook” key and press the ENTER button.
3. Select one of the “None (Add New)” keys from the name list of the phonebook and press the ENTER button.

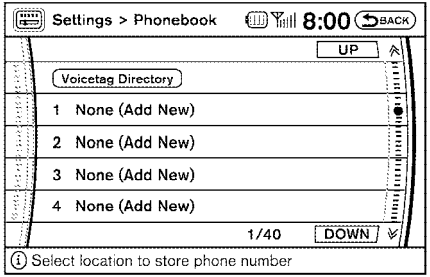

LHA0983

4. Select the “Transfer via Bluetooth” key in order to transfer a phonebook entry from your cellular phone to your phonebook in your car.
5. Operate the cellular phone to send a person’s name and phone number from the memory of the cellular phone. The memory sending procedure from the cellular phone varies according to each cellular phone manufacturer. See the cellular phone owner’s manual for more details.

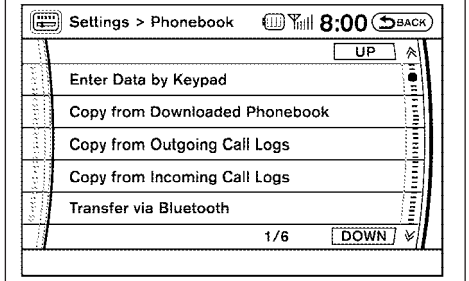

LHA0984

6. After the download is registered in the phonebook, the system will ask if you want to add a voicetag for it. The voicetag screen will be displayed.

   If you want to add a voicetag select the “Yes” key and press the ENTER button. For example, if the person’s name is David, speak “David” while the Store voicetag screen is on the display. The David voicetag is stored in the phonebook. Voicetag is a useful function for easy dialing supported by the Voice Recognition system. For more information, see “INFINITI Voice Recognition System” later in this section.

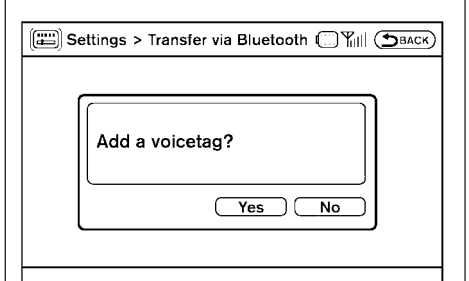

LSU0007

7. When the phonebook download is completed, the screen will return to the name list of the phonebook.

There are different methods to input a phone number. Select one of the following options for Step 4 above.

Enter Data by Keypad:
Input the name and phone number manually using the keypad displayed on the screen. For information on how to use the touch screen, see “How to use the touch screen” earlier in this section.

Copy from Downloaded Phonebook:
Copy a phonebook from the Bluetooth® cellular phone. The availability of this function depends on each cellular phone. The copying procedure from the cellular phone also varies according to each cellular phone. See the cellular phone owner's manual for more details.

Copy from Outgoing Call Logs:
Store the name and phone number from the outgoing call list.

Copy from Incoming Call Logs:
Store the name and phone number from the incoming call list.

Transfer via Bluetooth:
Transfer a contact from the Bluetooth® cellular phone. Availability of this function depends on each cellular phone. The transferring procedure from the cellular phone also varies according to each cellular phone. See the cellular phone owner's manual for more details.

Delete:
Delete a contact that is registered in the phonebook.

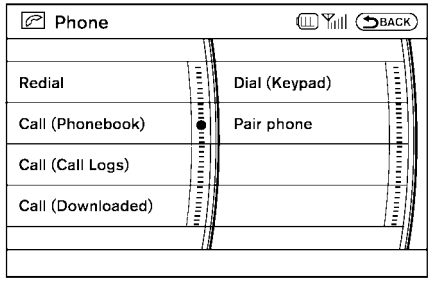

LSU0078

MAKING A CALL

To make a call, follow the procedure below.

1. Press the PHONE button on the instrument panel or the switch on the steering wheel. The "Phone" screen will appear on the display.
2. Select the "Call (Phonebook)" key on the "Phone" menu, and press the ENTER button.
3. Select the registered person's name from the list, and press the ENTER button. Dialing will start and the screen will change to the Call in Progress screen.
4. After the call is over, perform one of the following to finish the call:
   a. Select the "Hang up" key on the Call in Progress screen and press the ENTER button.
   b. Press the MODE switch on the steering wheel.
   c. When the Call in Progress screen is displayed, press the PHONE button on the instrument panel to hang up. If any other screen is currently displayed, press the PHONE button to display the Call in Progress screen first, then press the PHONE button again to hang up.

There are different methods to make a call. Select one of the following options instead of "Call (Phonebook)" in Step 2 above.

- **Redial:**

  Dial the previously dialed number again.

- **Call (Call Logs):**

  Select the name or phone number from the incoming or outgoing call logs.

- **Call (Downloaded):**

  Select the name or phone number from the downloaded call list.

- **Dial (Keypad):**

  Input the phone number manually using the keypad displayed on the screen. For information on how to use the touch screen, see “How to use the touch screen” earlier in this section.

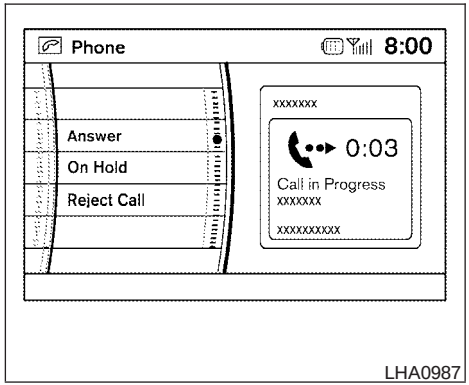

RECEIVING A CALL

When you hear a phone ring, the display will change to phone mode. To receive a call, follow one of the procedures listed below.

a. Touch the “Answer” key on the display.

b. Press the PHONE button on the instrument panel.

c. Press the phone button on the steering wheel switches.

There are some options available when receiving a call. Select one of the following displayed on the screen.

Answer:
Accept an incoming call to talk.

On Hold:
Put an incoming call on hold.

Reject Call:
Reject an incoming call.

To finish the call, follow one of the procedures listed below.

a. Touch the “Reject Call” key on the display.

b. Press the PHONE button on the instrument panel.

c. Press and hold the phone MODE button on the steering wheel switches.

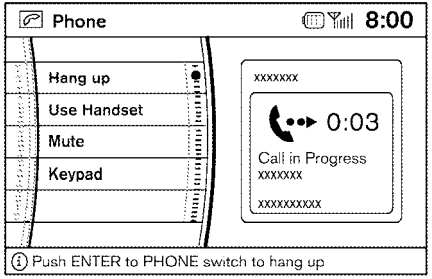

LHA0988

DURING A CALL

There are some options available during a call. Select one of the following displayed on the screen if necessary.

Hang up:
Finish the call.

Use Handset:
Transfer the call to the cellular phone.

Mute:
Mute your voice to the person.

Dial (Keypad):
Brings up a keypad; enter digits when needed. For example, entering your PIN number for voicemail.

NOTE:

Pushing the TALK switch on the steering wheel during a call allows numbers and digits to be sent using Voice Recognition.

Cancel Mute:
This will appear after the “Mute” key is touched. Mute will be cancelled.

To adjust the person’s voice to be louder or quieter, press the volume control switch located on the steering wheel switches or turn the volume control knob on the instrument panel while talking on the phone. This adjustment is also available in the SETTING mode.

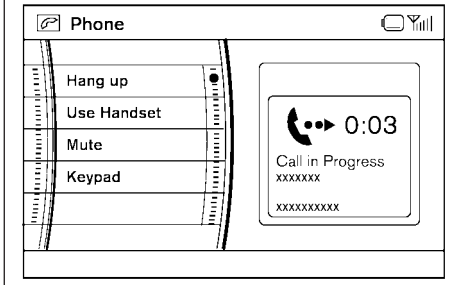

LSU0009

ENDING A CALL

To finish the call, perform one of the following procedures:

- Select the “Hang up” key on the Call in Progress display and press the ENTER button.
- Push the MODE switch on the steering wheel.
- When the Call in Progress screen is displayed press the PHONE button on the instrument panel to hang up. If any other screen is currently displayed, press the PHONE button to display the Call in Progress screen first, then press the PHONE button again to hang up.

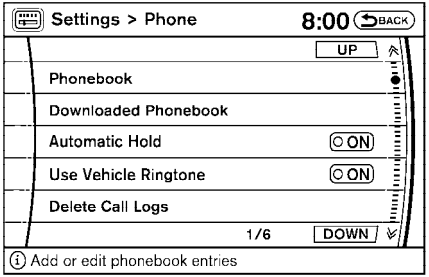

LHA0978

PHONE SETTING

To set up the Bluetooth® Hands-Free Phone System to your preferred settings, press the SETTING button on the instrument panel and select the “Phone” key on the display, and then press the ENTER button.

Phonebook:
See “Phonebook” earlier in this section for adding, editing and deleting a contact.

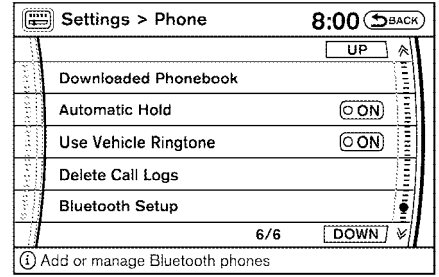

LHA0979

Downloaded Phonebook:
See the following information for each item.

- **Download All:**
  Download all of the contacts registered in the Bluetooth® cellular phone. Availability of this function depends on each cellular phone. The memory downloading procedure from the cellular phone also varies according to each cellular phone. See your cellular phone Owner’s Manual for more details.
- **Delete Downloaded Phonebook:**
  Delete all of the downloaded phonebook entries.
- **Delete an Entry of Downloaded Phonebook:**
  Delete a single entry from the downloaded phonebook. Touch the corresponding letter key, then touch on the name key you wish to delete. Touch the “Yes” key to delete the entry.

Automatic Hold:
If this item is turned on, an incoming call will be placed on hold automatically after several rings.

Use Vehicle Ringtone:
If this item is turned on, a specific ringtone that is different from the cellular phone’s will sound when receiving a call.

Delete Call Logs:
Delete all the outgoing or incoming call logs from the list.

Bluetooth Setup:
See the following information for each item.

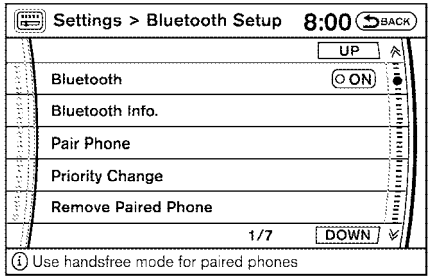

LHA0980

- **Bluetooth:**
  If this item is turned off, the connection between the cellular phone and the in-vehicle phone module will be canceled.
- **Bluetooth Info.:**
  Check information about the device name, vehicle name, device address, device PIN and connection status.
- **Pair Phone:**
  See “Pairing Procedure” in this section.

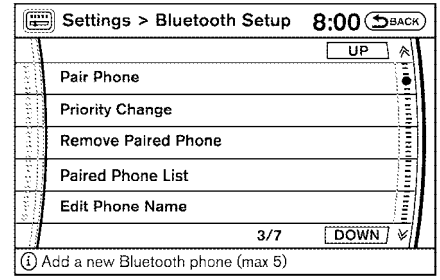

LHA0989

- **Priority Change**
  If multiple phones are registered to the system, you can change the priority of the phones on the shown list. The system shows the priority level of each phone. Select phone to change priority. Then, select another phone to swap priority levels.
- **Remove Paired Phone:**
  Delete a registered cellular phone from the paired list.
- **Paired Phone List:**
  Up to 5 registered cellular phones are shown on the list. If you select a cellular phone that is different from the one currently being connected, the newly selected phone will be connected to the system.
- **Edit Phone Name:**
  If you would like to change the way your phone’s name is displayed, select this key; a character input screen will be displayed.

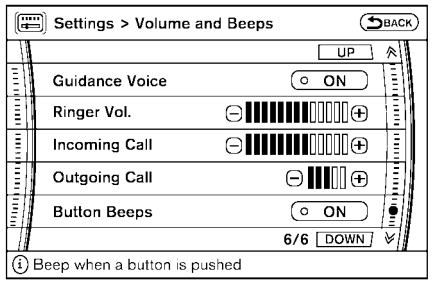

LSU0083

CALL VOLUME

Adjusting the incoming or outgoing call volume may improve clarity if reception between callers is unclear.

- Incoming call — adjusting this setting allows *you* to hear a difference in volume.
- Outgoing call — adjusting this setting allows *the person you are talking with* to hear a difference in volume.

To access the settings, press the SETTING button, then highlight “Volume and Beeps” using the INFINITI controller and press the ENTER button.

You can also adjust the volume of an incoming voice during a call by pushing the volume control switch on the steering wheel or by turning the volume control knob on the instrument panel.

INFINITI VOICE RECOGNITION SYSTEM

INFINITI Voice Recognition allows hands-free operation of the systems equipped on this vehicle, such as phone and vehicle information.

There are two voice recognition modes of operation available. They are:

- Standard Mode
- Alternate Command Mode

In Standard Mode (the factory default setting), commands that are available are always shown on the display and announced by the system. You can complete your desired operation by simply following the prompts given by the system. In this mode, hands-free operation of Audio Climate Control and Display is not available through INFINITI Voice Recognition.

For advanced operation, you can change to an Alternate Command Mode that enables the operation of the display, audio, and climate control through INFINITI Voice Recognition. When this mode is active, an expanded list of commands can be spoken after pushing the TALK switch on the steering wheel, and the voice command menu prompts are turned off.

In Alternate Command Mode the recognition success rate may be affected because the number of available commands and the ways of speaking each command are increased. See

"INFINITI Voice Recognition Alternate Command Mode" later in this section.

To improve the recognition success rate when Alternate Command Mode is active, try using the Speaker Adaptation Function available in that mode. See "Speaker Adaptation Function" later in this section. Otherwise, it is recommended that Alternate Command Mode be turned off and Standard Mode be used for the best recognition performance.

For the voice commands for the navigation system, refer to the Navigation System Owner's Manual of your vehicle.

For vehicles in the U.S., the factory default setting is the Standard Mode. See "Standard Mode" in this section. For vehicles in Canada, the factory default setting is the Alternate Command Mode. See "Alternate Command Mode" later in this section.

INFINITI VOICE RECOGNITION STANDARD MODE

The Standard Mode enables control of navigation, phone and vehicle information. With this setting active, commands that are available are always shown on the display and announced by the system.

Displaying user guide

If you use the INFINITI Voice Recognition system for the first time or you do not know how to operate it, you can display the User Guide for confirmation.

You can confirm how to use voice commands by accessing a simplified User Guide, which contains basic instructions and tutorials for several voice commands.

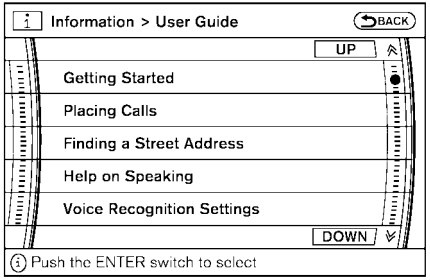

LSU0012

1. Press the INFO button on the instrument panel.
2. Highlight the "Others" key using the INFINITI controller and press the ENTER button.
3. Highlight the "Voice Recognition" key using the INFINITI controller and press the ENTER button.

NOTE:

You can skip steps 1 to 3 by pressing the switch and saying “Help”.

4. Highlight the “User Guide” key using the INFINITI controller and press the ENTER button.
5. Highlight an item using the INFINITI controller and press the ENTER button.

Available items:

- Getting Started

  Describes the basics of how to operate the Voice Recognition system.

- Finding a Street Address

  Tutorial for entering a destination by street address.

- Placing Calls

  Tutorial for making a phone call by voice command operation.

- Help on Speaking

  Displays useful tips of speaking for correct command recognition by the system.

- Voice Recognition Settings

  Describes the available Voice Recognition settings.

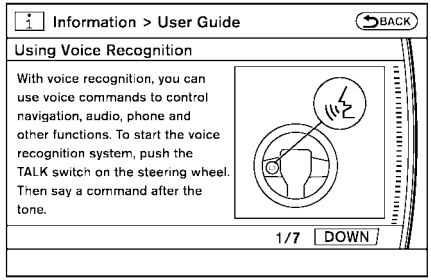

LSU0014

Getting started

Before using the Voice Recognition system for the first time, you can confirm how to use commands by viewing the Getting Started section of the User Guide.

1. Highlight “Getting Started” and press the ENTER button.
2. You can confirm the page by scrolling the screen using the INFINITI controller.

Tutorials on the operation of the Voice Recognition system

If you choose “Finding a Street Address” or “Placing Calls”, you can view tutorials on how to perform these operations using Voice Recognition.

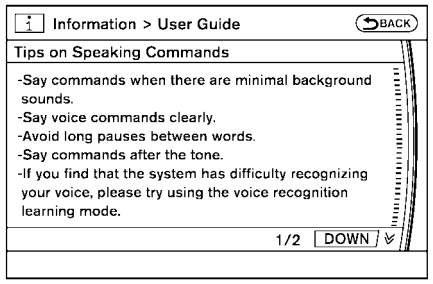

LSU0015

Useful tips for correct operation

You can display useful speaking tips to help the system recognize your voice commands correctly.

1. Highlight “Help on Speaking” and press the ENTER button.
2. You can confirm the page by scrolling the screen using the INFINITI controller.

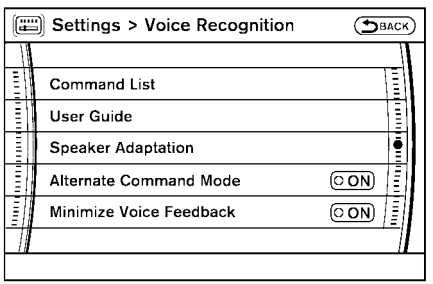

LSU0080

Voice recognition settings

The available settings of the INFINITI Voice Recognition system are described.

1. Highlight “Voice Recognition Settings” and press the ENTER button.
2. You can confirm the page by scrolling the screen using the INFINITI controller.

USING THE SYSTEM

Initialization

When the ignition switch is placed in the ON position, INFINITI Voice Recognition is initialized, which takes a few seconds. When completed, the system is ready to accept voice commands. If the switch is pressed before the initialization completes, voice commands will not be accepted. Please wait until the INFINITI Voice Recognition initialization is completed.

BEFORE STARTING

To get the best recognition performance from Voice Recognition, observe the following:

- The interior of the vehicle should be as quiet as possible. Close the windows to eliminate the surrounding noises (traffic noise and vibration sounds, etc.), which may prevent the system from correctly recognizing the voice commands.
- Wait until the tone sounds before speaking a command.
- Speak in a natural conversational voice without pausing between words.
- If the air conditioner is set to “Auto”, the fan speed is automatically lowered so that your commands can be recognized more easily.

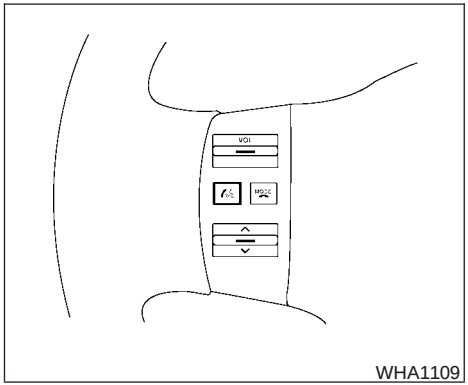

WHA1109

GIVING VOICE COMMANDS

1. Press the switch located on the steering wheel.

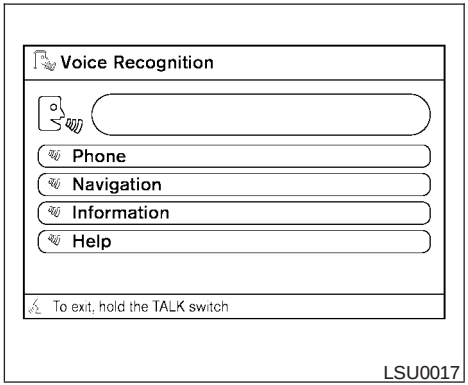

LSU0017

2. A list of commands appears on the screen, and the system announces, “Would you like to access Phone, Navigation, Information or Help?”
3. After the tone sounds and the icon on the screen changes from to , speak a command.
4. Continue to follow the voice menu prompts and speak after the tone sounds until your desired operation is completed.

Operating tips

- Say a command after the tone. Voice commands cannot be accepted when the icon is .
- Commands that are available are always shown on the display and spoken through voice menu prompts. Commands other than those that are displayed are not accepted. Please follow the prompts given by the system.
- If the command is not recognized, the system repeats the announcement. Repeat the command in a clear voice.
- Press the switch on the steering wheel to return to the previous screen.
- If you want to cancel the command, press and hold the switch. The message, “Voice cancelled” will be announced.
- If you want to adjust the volume of the system feedback, push the volume control switch on the steering wheel or use the audio system volume knob while the system is making an announcement.

How to speak numbers

Voice Recognition requires a certain way to speak numbers when giving voice commands. Refer to the following examples.

General rule:

- Only single digits 0 (zero) to 9 can be used.
- When saying the phone number 800-662-6200, the system will accept “eight-hundred” in addition to “eight zero zero” or “eight oh oh”. 500, 700, and 900 are also supported.

Examples:

- 1-800-662-6200
  - “One eight zero zero six six two six two zero zero”
  - “One eight hundred six six two six two zero zero”

Improving Recognition of Phone numbers:

You can improve the recognition of phone numbers by saying the phone number in three groups of numbers. For example, when you try to call 800-662-6200, say “eight zero zero” first, and the system will then ask you for the next three digits. Then, say “six six two”. After recognition, the system will then ask for the last four digits. Say, “six two zero zero”. Using this method of phone digit entry can improve recognition performance.

NOTE:

When speaking a house number, speak the number “0” as “zero” or “oh”. If the letter “O” is included in the house number, it will not be recognized as “0” even if you speak “oh” instead of “zero”.

Standard Mode command list

Category Command:

COMMAND	ACTION
Phone	Displays Phone function commands.
Navigation	Displays Navigation function commands.
Information	Displays Vehicle Information.
Help	Displays User Guide.

Navigation Command:

COMMAND	ACTION
Address	Searches for a location by the street address specified, and sets a route (for continental US and Canada only).
Places	Sets a route to a facility near the current vehicle location.
Home	Sets a route to your home that is stored in the Address Book.
Previous Destinations	Sets a route to a previous destination.

Phone Command:

COMMAND	ACTION
Dial Number	Makes a call to a spoken phone number up to 10 digits.
Change Number	Corrects the phone number when it is not recognized (available during phone number entry).
Redial	Makes a call to the last dialed number.
Phonebook	Makes a call to a contact that is stored in the Phonebook.
International Call	Makes an international call by allowing more than 10 digits to be spoken, as well as star (*), pound (#), and plus (+).

Vehicle Information Command: (if so equipped)

COMMAND	ACTION
Traffic Info.	Turns the traffic information system on and off.
Fuel Economy	Displays Fuel Economy information.
Trip Computer	Displays Trip information.
Maintenance	Displays Maintenance information.

Voice command examples

Some basic voice command examples are described here.

For navigation system commands, see the separate Navigation System Owner's Manual.

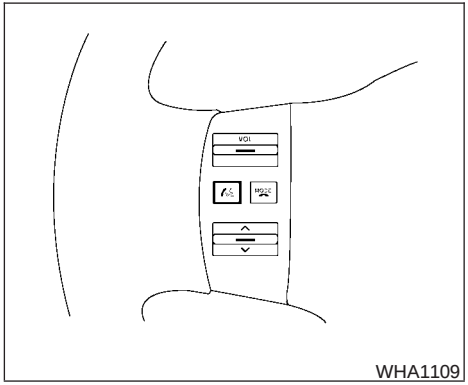

Example 1 — Placing a call to the phone number 800-662-6200:

1. Press the switch located on the steering wheel.

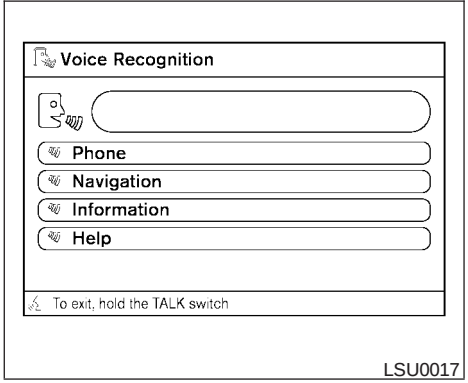

2. The system announces, "Would you like to access Phone, Navigation, Information or Help?"
3. Say "Phone".

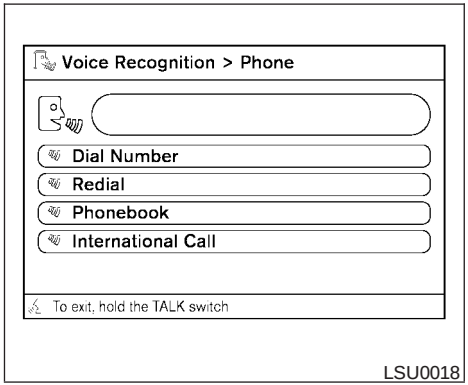

4. Say “Dial Number”.

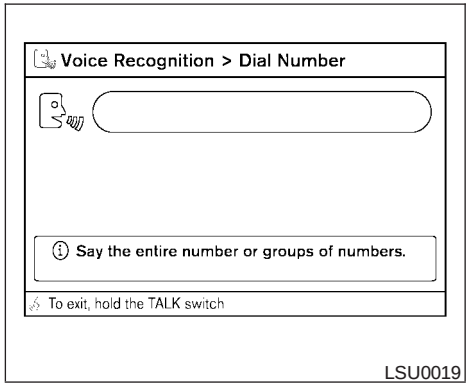

5. Say “800”.

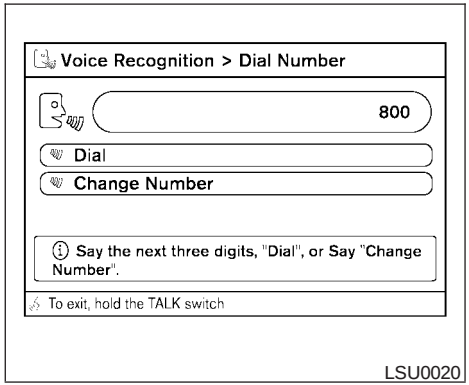

6. The system announces, “Please say the next three digits or dial, or say change number.”
7. Say “662”.

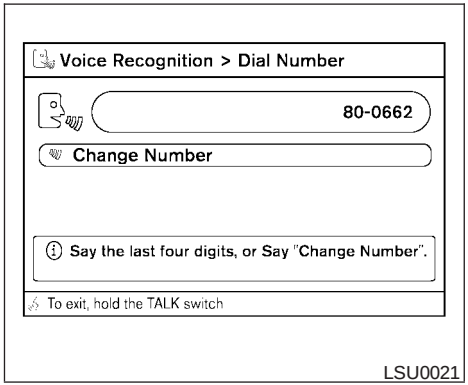

8. The system announces, “Please say the last four digits” or say change number.
9. Say “6200”.

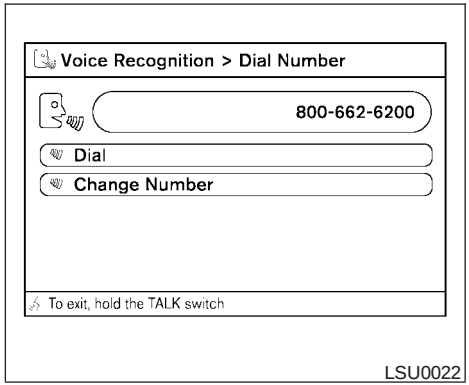

10. The system announces, “Dial or Change Number?”
11. Say “Dial”.
12. The system makes a call to 800-662- 6200.

NOTE:

- You can also speak “800-662-6200” (10 continuous digits) or “662-6200” (7 continuous digits), if the area code is not necessary. However, the 3-3-4 digit grouping is recommended for improved recognition. See “How to speak numbers” earlier in this section.
- You can only say a phone number using the 3-3-4 grouping, 7 digits, and 10 digits using this command. Please use the “International Call” command for all other formats, and when special characters such as star (*), pound (#), and plus (+) need to be entered.
- If you say “Change Number” during phone number entry, the system will automatically request that you repeat the number using the 3-3-4 format. In this case please say the area code first and then follow the prompts.
- Do not add a “1” in front of the area code when speaking phone numbers.
- If the system does not recognize your command, please try repeating the command using a natural voice. Speaking too slow or too loudly may further decrease recognition performance.

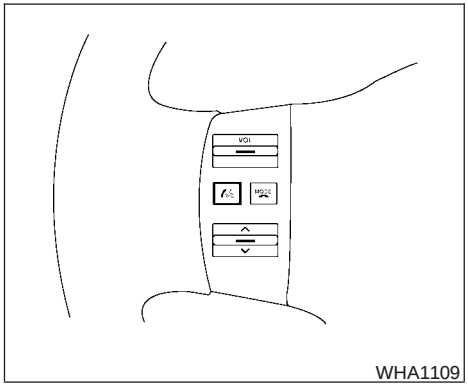

WHA1109

Example 2 — Placing an international call to the phone number 011-81-111-222-3333:

1. Press the switch located on the steering wheel.

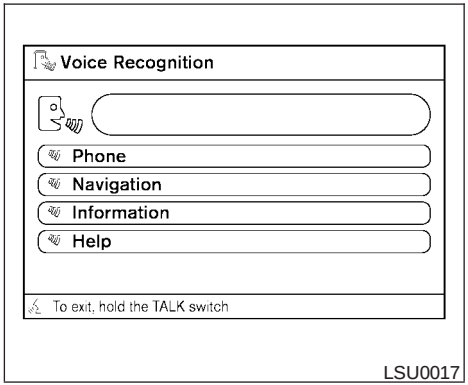

LSU0017

2. The system announces, “Would you like to access Phone, Navigation, Information or Help?”
3. Say “Phone”.

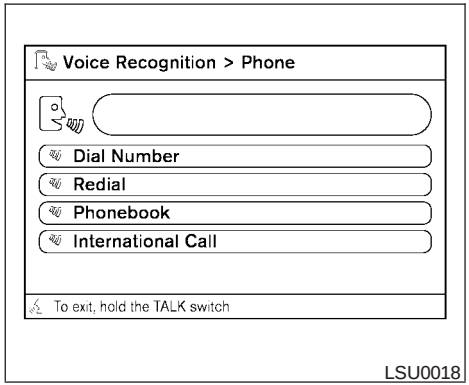

LSU0018

4. Say “International Call”.

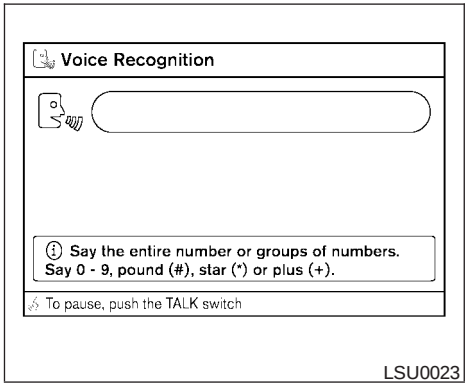

5. Say “011811112223333”.

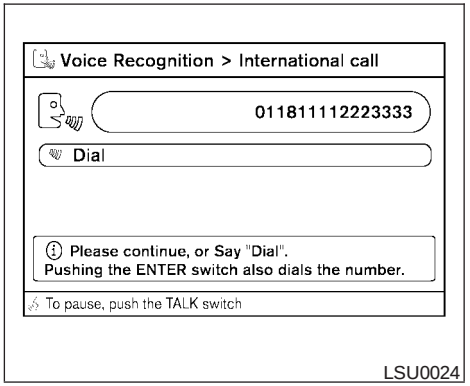

6. Say “Dial”.
7. The system makes a call to 011-81-111-222-3333.

NOTE:

Any digit input format is available in the International Number input process, as well as the special characters such as star (*), pound (#), and plus (+).

INFINITI VOICE RECOGNITION ALTERNATE COMMAND MODE

The Alternate Command Mode enables control of the Audio, Climate Control and Display systems as well as additional commands for the Vehicle Information, Phone and Navigation systems. With this setting active, the system does not announce or display the available commands at each step.

When Alternate Command Mode is activated, an expanded list of commands can be used after pushing the TALK switch. Under this mode, the screen for Standard Mode commands is not available on the display. Please review the expanded command list, available when this mode is active, as some Standard Mode commands are replaced. Please see examples of Alternate Command Mode screens.

Please note that in this mode the recognition success rate may be affected as the number of available commands and ways of speaking each command are increased. You can turn this mode ON or OFF. When this mode is activated, the Voice Recognition Settings will change to show more options.

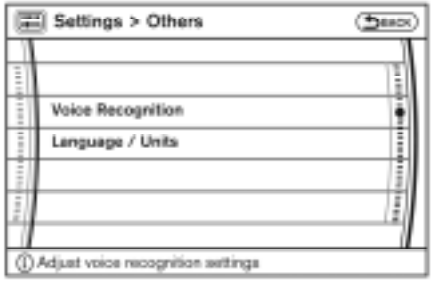

WHA1125

Activating Alternate Command Mode

1. Press the SETTING button on the instrument panel.
2. Highlight the “Others” key on the display and then press the ENTER button.
3. Highlight the “Voice Recognition” key and then press the ENTER button.

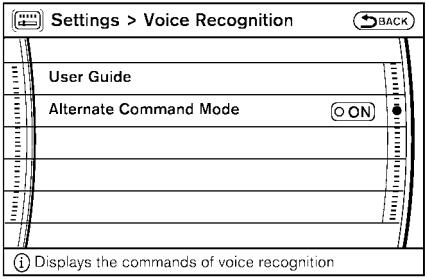

LSU0026

4. Highlight the “Alternate Command Mode” key and press the ENTER button.
5. The confirmation message is displayed on the screen. Select the “OK” key and press the ENTER button to activate the Alternate Command Mode.

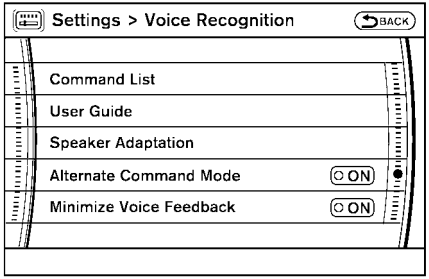

LSU0027

6. Alternate Command Mode is activated and the setting menu is expanded to include the Alternate Command Mode options. See “Settings menu” later in this section for an explanation of the options.

Displaying the command list

If you are controlling the system by voice commands for the first time or do not know the appropriate voice command, perform the following procedure for displaying the voice command list (available only in Alternate Command Mode).

Press the switch, listen for the tone and say, “Help”. The system will respond by displaying the command list main menu.

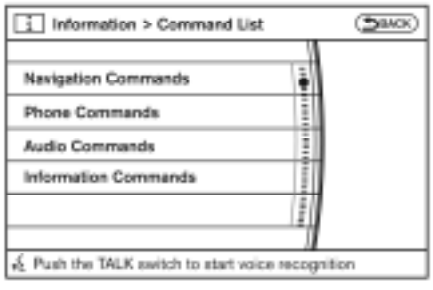

WHA1126

Only manual controls such as the touch screen can navigate the command list menu.

As an alternative to the voice command “Help”, you may access the command list using the following steps:

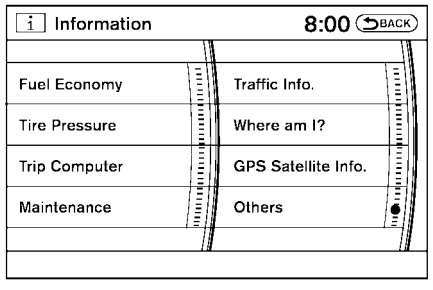

LSU0028

1. Press the INFO button on the instrument panel.
2. Highlight the “Others” key using the INFINITI controller and press the ENTER button.
3. Highlight the “Voice Recognition” key using the INFINITI controller and press the ENTER button.

NOTE:

You can skip steps 1 to 3 if you say “Help”.

4. Highlight the “Command List” key using the INFINITI controller and press the ENTER button.

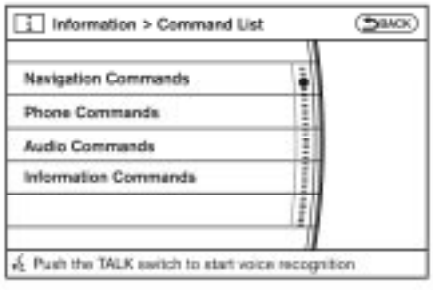

WHA1126

5. Highlight a category using the INFINITI controller and press the ENTER button. The command list for the category selected is shown.
6. If necessary, scroll the screen using the INFINITI controller to view the entire list.
7. Press the BACK button to return to the previous screen.

Alternate Command Mode command list

Navigation Command:

COMMAND	ACTION
Home	Sets a route to your home that is stored in the Address Book.
Address Book	Displays the first 5 entries of the Address Book.
Previous Destinations	Sets a route to a previous destination.
Previous Start Point	Calculates a route to your previous starting point of the last route.
Address	Searches for a location by the street address specified, and sets a route (for continental US and Canada only).
Places	Sets a route to a facility near the current vehicle location.
Fastest Route	Recalculates a route to the current destination using the fastest estimated time.
Minimize Freeway	Recalculates a route to the current destination while minimizing freeway usage.
Shortest Route	Recalculates a route to the current destination using the shortest distance.
Recalculate	Recalculates a route to the current destination.
Route Information	Displays the Route Information Menu.
Cancel Route	Cancels the current route.
Detour	Displays a list of distances to detour from the current route.
Show Current Location	Displays the current location on the Map view.
Planview Map	Changes the Map display to a 2-dimensional view.
Birdview Map	Changes the Map display to Birdview.
Planview Split Map	Changes the Map display to show two 2-dimensional maps using a split screen.
Birdview Split Map	Changes the Map display to show a 2-dimensional map and Birdview map using a split screen.
Heading Up	Changes the Map display to keep the direction of the vehicle pointing up on the screen.

COMMAND	ACTION
North Up	Changes the Map display to keep north pointing up on the screen.
Zoom In	Changes the map scale to a smaller number.
Zoom Out	Changes the map scale to a larger number.
Landmark Icons	Shows or hides the points of interests on the displays.
Guidance Voice	Turns the navigation voice guidance on or off.
Guide Voice Repeat	Repeats the last navigation voice guidance.
Store Location	Stores the current location to the Address Book.

Phone Command:

COMMAND	ACTION
Redial	Makes a call to the last dialed number.
Dial Number	Makes a call to a spoken phone number up to 10 digits.
Phonebook	Makes a call to a contact that is stored in the Phonebook.
Outgoing Calls	Shows the last 5 outgoing phone calls.
Incoming Calls	Shows the last 5 incoming phone calls.
International Call	Makes an international call by allowing more than 10 digits to be spoken, as well as star (*), pound (#), and plus (+).

Audio Command:

COMMAND	ACTION
Radio	Turns the radio on, selecting the station and band last played.
Radio AM	Turns to the AM band, selecting the station last played.
Radio FM	Turns to the FM band, selecting the station last played.
Satellite Radio	Turns to the SAT band, selecting the station last played.
Music Box	Turns to the Music Box hard-disk drive audio system.
CD	Starts to play a CD.

Vehicle Information Command:

COMMAND	ACTION
Traffic Info	Turns the traffic information system on and off.
Fuel Economy	Displays Fuel Economy information.
Trip Computer	Displays Trip information.
Maintenance	Display Maintenance information.
Tire Pressure	Displays the Tire Pressure screen.

Climate Control Command:

COMMAND	ACTION
Climate Control	Turns the climate control system on and operates it in the AUTO mode.
Climate Control Off	Turns the climate control system off.

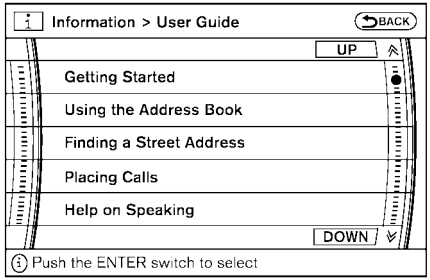

LSU0031

Displaying user guide

You can confirm how to use voice commands by accessing a simplified User Guide, which contains basic instructions and tutorials for several voice commands.

1. Press the INFO button on the instrument panel.
2. Highlight the “Others” key using the INFINITI controller and press the ENTER button.
3. Highlight the “Voice Recognition” key using the INFINITI controller and press the ENTER button.
4. Highlight the “User Guide” key using the INFINITI controller and press the ENTER button.

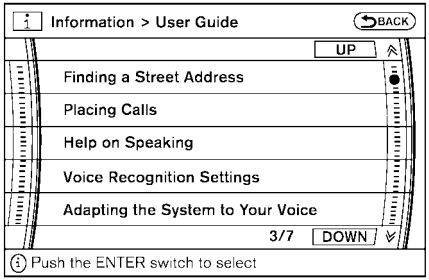

LSU0084

5. Highlight an item using the INFINITI controller and press the ENTER button.

Available items:

- Getting Started

  Describes the basics of how to operate the Voice Recognition system.

- Using the Address Book

  Tutorial for using the Address Book.

- Finding a Street Address

  Tutorial for Finding a Street Address.

- Placing Calls

  Tutorial for making a phone call by voice command operation.

- Help on Speaking

  Displays useful tips for how to correctly speak commands in order for them to be properly recognized by the system.

- Voice Recognition Settings

  Describes the available Voice Recognition settings.

- Adapting the System to Your Voice

  Tutorial for adapting the system to your voice.

USING THE SYSTEM

Initialization

When the ignition switch is placed in the ON position, INFINITI Voice Recognition is initialized, which takes a few seconds. When completed, the system is ready to accept voice commands. If the switch is pressed before the initialization completes the display will show the message: “Phonetic data downloaded. Please wait.” or a beep sounds.

Before starting

To get the best performance from INFINITI Voice Recognition, observe the following:

- Keep the interior of the vehicle as quiet as possible. Close the windows to eliminate the surrounding noises (traffic noises, vibration sounds, etc.), which may prevent the system from recognizing the voice commands correctly.
- When the climate control is in the AUTO mode, the fan speed decreases automatically for easy recognition.
- Wait until a tone sounds before speaking a command.
- Speak in a natural voice without pausing between words.

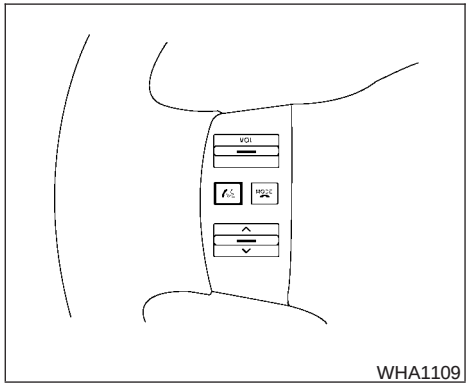

WHA1109

Giving voice commands

1. Press and release the switch located on the steering wheel.

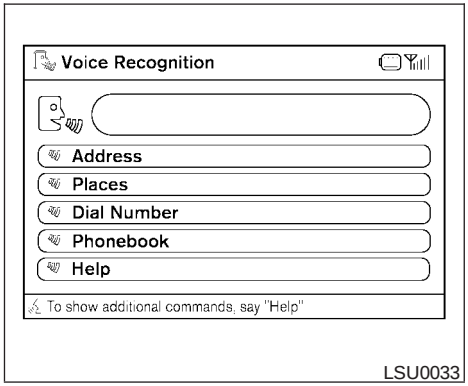

2. A list of commands appears on the screen, and the system announces, “Please say a command from the displayed list or say Help to show all commands.”
3. After the tone sounds and the icon on the screen changes from to , speak a command.
4. Once a command is recognized, the system will announce the recognized command and perform the requested action.

   If the command is not recognized, the system repeats the announcement. Repeat the command in a clear voice after the tone.

Operating tips

- Say a command after the tone. Voice commands cannot be accepted when the icon is .
- If the command is not recognized, the system repeats the announcement. Repeat the command in a clear voice.
- Press the switch on the steering wheel to return to the previous screen.
- If you want to cancel the command, press and hold the switch. The message, “Voice cancelled” will be announced.
- If you want to adjust the volume of the system feedback, push the volume control switch on the steering wheel or use the audio system volume knob while the system is making an announcement.
- To minimize the amount of prompts spoken by the system in Alternate Command Mode, use the Minimize Voice Feedback function. To access the Minimize Voice Feedback function press the SETTING button, then select the “Others” key using the INFINITI controller and press the ENTER button. Then select the “Voice Recognition” key using the INFINITI controller and press the ENTER button.

How to speak numbers

Voice Recognition requires a certain way to speak numbers when giving voice commands. Refer to the following examples.

General rule:

- Only single digits 0 (zero) to 9 can be used.
- When saying the phone number 800-662-6200, the system will accept “eight-hundred” in addition to “eight zero zero” or “eight oh oh”. 500, 700, and 900 are also supported.

Examples:

- 1-800-662-6200
  - “One eight zero zero six six two six two zero zero”
  - “One eight hundred six six two six two zero zero”

Improving Recognition of Phone numbers:

You can improve the recognition of phone numbers by saying the phone number in three groups of numbers. For example, when you try to call 800-662-6200, say “eight zero zero” first, and the system will then ask you for the next three digits. Then, say “six six two”. After recognition, the system will then ask for the last four digits.

Say, “six two zero zero”. Using this method of phone digit entry can improve recognition performance.

NOTE:

When speaking a house number, speak the number “0” as “zero” or “oh”. If the letter “O” is included in the house number, it will not be recognized as “0” even if you speak “oh” instead of “zero”.

Settings menu

The content of the Settings Menu differs when the system is in the Alternate Command Mode.

Command List:

Displays the command list for Alternate Command Mode.

User Guide:

The user guide provides basic instructions for using Voice Recognition and accessing some voice commands.

NOTE:

The user guide can also be accessed from within the INFO menu after pressing the INFO button.

Speaker Adaptation:

Starts a system training procedure to learn the specific sounds of your voice. See “Speaker adaptation function” later in this section.

Alternate Command Mode:

For advanced operation, an Alternate Command Mode is provided. This setting enables control of the Audio and Climate Control systems in addition to additional commands for the Phone and Navigation systems. With this setting active, the system does not announce or display the available commands at each step. When this mode is activated, the Voice Recognition Settings will change to show more options.

Minimize Voice Feedback:

Reduces the amount of the information spoken for each voice instruction.

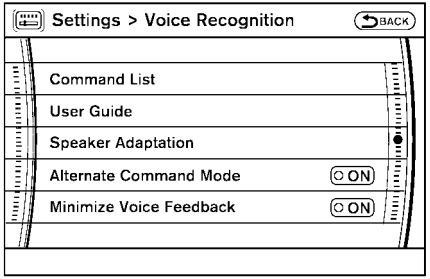

LSU0080

SPEAKER ADAPTATION FUNCTION

The Voice Recognition system has a function to learn the user’s voice for better voice recognition performance. The system can memorize the voices of up to three persons.

Having the system learn the user’s voice

1. Press the SETTING button on the instrument panel, highlight the “Others” key on the display and then press the ENTER button.
2. Highlight the “Voice Recognition” key and then press the ENTER button.
3. Highlight the “Speaker Adaptation” key and then press the ENTER button.

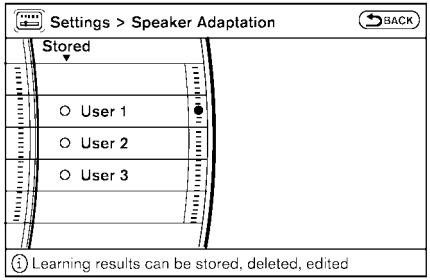

LSU0034

4. Select the user whose voice is to be memorized by the system and press the ENTER button.

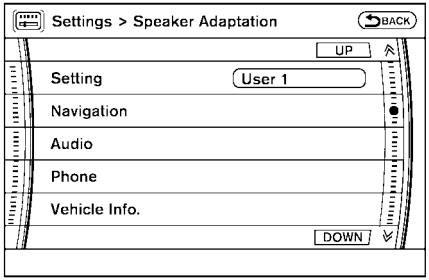

LSU0082

5. Select a category to be learned by the system from the following list and then press the ENTER button.
   - Navigation
   - Audio
   - Phone
   - Vehicle Info.
   - Others

   The voice commands in the category are displayed.
6. Select a voice command to train and then press the ENTER button.

   The Voice Recognition system starts.

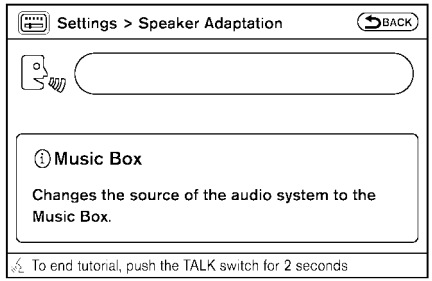

LSU0036

7. The system requests that you repeat a command after a tone. This command is also displayed on the screen.
8. After the tone sounds and the icon on the screen changes from to , speak the command that the system requested.
9. When the system has recognized the voice command, the voice of the user is learned.

Press the switch or the BACK button to return to the previous screen.

If the system has learned the command correctly, the voice command indicator on the screen turns on.

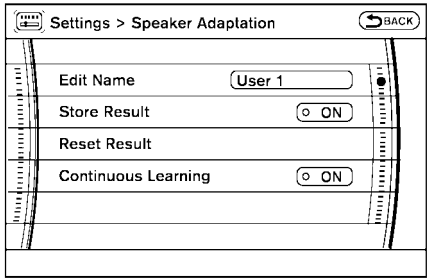

LSU0037

Speaker Adaptation function settings

Edit Name:

Edit the user name using the keypad displayed on the screen.

Store Result:

When this item is turned to ON, the Voice Recognition system can easily recognize the user's voice that it has learned.

Reset Result:

Resets the user's voice that the Voice Recognition system has learned.

Continuous Learning:

When this item is turned to ON, you can have the system learn the voice commands in succession, without selecting commands one by one.

TROUBLESHOOTING GUIDE

The system should respond correctly to all voice commands without difficulty. If problems are encountered, follow the solutions given in this guide for the appropriate error.

Where the solutions are listed by number, try each solution in turn, starting with number one, until the problem is resolved.

Symptom/error message	Solution
Displays “COMMAND NOT RECOGNIZED” or the system fails to interpret the command correctly.	1. Ensure that the command format is valid, see “Standard Mode command list” or “Alternate Command Mode command list” earlier in this section. 2. Speak clearly using your normal speech pattern and at a level appropriate to the ambient noise level. 3. Ensure that the ambient noise level is not excessive, for example, windows open or defrost on. **NOTE:** **If it is too noisy to use the phone, it is likely that voice commands will not be recognized.**
The system consistently selects the wrong voicetag in the phonebook.	1. Ensure that the voicetag requested matches what was originally stored. See “Bluetooth® Hands-Free Phone System” earlier in this section. 2. Replace one of the voicetags being confused with a different voicetag.

MEMO

5 Starting and driving

Precautions when starting and driving 5-2
Exhaust gas (carbon monoxide) 5-2
Three-way catalyst 5-2
On-pavement and off-road driving precautions 5-3
Tire pressure monitoring system (TPMS) 5-3
Avoiding collision and rollover 5-5
Off-road recovery 5-6
Rapid air pressure loss 5-6
Drinking alcohol/drugs and driving 5-7
Driving safety precautions 5-7
Ignition switch 5-9
Intelligent Key System 5-9
Ignition switch positions 5-10
INFINITI vehicle immobilizer system 5-10
Before starting the engine 5-11
Starting the engine 5-11
Driving the vehicle 5-12
Engine protection mode 5-12
Automatic transmission 5-13
Parking brake 5-16
Cruise control 5-17
Precautions on cruise control 5-17
Cruise control operations 5-18
Intelligent Cruise Control system (if so equipped) 5-19
Selecting the intelligent cruise control mode 5-19
Vehicle-to-vehicle distance control mode 5-20
Precautions on vehicle-to-vehicle distance control mode 5-20
Conventional (FIXED SPEED) cruise control mode 5-35
Brake Assist (WITH PREVIEW FUNCTION) (for Intelligent Cruise Control System equipped models) 5-38
Brake assist 5-38
Preview function 5-38
Break-in schedule 5-40
Increasing fuel economy 5-40
4X4 Using four wheel drive (4WD) 5-41
Transfer case shifting procedures 5-42
Parking/parking on hills 5-48
Power steering 5-49
Brake system 5-49
Brake precautions 5-49
Anti-lock Braking System (ABS) 5-50
Vehicle Dynamic Control (VDC) system 5-51

Rear sonar system 5-52
Front sonar system (if so equipped) 5-53
Cold weather driving 5-54
Freeing a frozen door lock 5-54
Anti-freeze 5-54
Battery 5-54
Draining of coolant water 5-55
Tire equipment 5-55
Special winter equipment 5-55
Driving on snow or ice 5-55
Engine block heater (if so equipped) 5-56

⚠ WARNING

- **Do not leave children or adults who would normally require the assistance of others alone in your vehicle. Pets should also not be left alone. They could accidentally injure themselves or others through inadvertent operation of the vehicle. Also, on hot, sunny days, temperatures in a closed vehicle could quickly become high enough to cause severe or possibly fatal injuries to people or animals.**
- **Properly secure all cargo with ropes or straps to help prevent it from sliding or shifting. Do not place cargo higher than the seatbacks. In a sudden stop or collision, unsecured cargo could cause personal injury.**

EXHAUST GAS (carbon monoxide)

⚠ WARNING

- **Do not breathe exhaust gases; they contain colorless and odorless carbon monoxide. Carbon monoxide is dangerous. It can cause unconsciousness or death.**
- **If you suspect that exhaust fumes are entering the vehicle, drive with all windows fully open, and have the vehicle inspected immediately.**
- **Do not run the engine in closed spaces such as a garage.**
- **Do not park the vehicle with the engine running for any extended length of time.**
- **Keep the lift gate and rear vent windows closed while driving, otherwise exhaust gases could be drawn into the passenger compartment. If you must drive with the lift gate or rear vent windows open, follow these precautions:**
  1. **Open all the windows.**
  2. **Set the air recirculation button to off and the fan control dial to high to circulate the air.**
- **If electrical wiring or other cable connections must pass to a trailer through the seal on the lift gate or the body, follow the manufacturer's recommendation to prevent carbon monoxide entry into the vehicle.**
- **The exhaust system and body should be inspected by a qualified mechanic whenever:**
  a. **The vehicle is raised for service.**
  b. **You suspect that exhaust fumes are entering into the passenger compartment.**
  c. **You notice a change in the sound of the exhaust system.**
  d. **You have had an accident involving damage to the exhaust system, underbody, or rear of the vehicle.**

THREE-WAY CATALYST

The three-way catalyst is an emission control device installed in the exhaust system. Exhaust gases in the three-way catalyst are burned at high temperatures to help reduce pollutants.

⚠ WARNING

- **The exhaust gas and the exhaust system are very hot. Keep people, animals or flammable materials away from the exhaust system components.**
- **Do not stop or park the vehicle over flammable materials such as dry grass, waste paper or rags. They may ignite and cause a fire.**

⚠ CAUTION

- **Do not use leaded gasoline. Deposits from leaded gasoline will seriously reduce the three-way catalyst's ability to help reduce exhaust pollutants.**
- **Keep your engine tuned up. Malfunctions in the ignition, fuel injection, or electrical systems can cause overrich fuel flow into the three-way catalyst, causing it to overheat. Do not keep driving if the engine misfires, or if noticeable loss of performance or other unusual operating conditions are detected. Have the vehicle inspected promptly by an INFINITI dealer.**
- **Avoid driving with an extremely low fuel level. Running out of fuel could cause the engine to misfire, damaging the three-way catalyst.**
- **Do not race the engine while warming it up.**
- **Do not push or tow your vehicle to start the engine.**

ON-PAVEMENT AND OFF-ROAD DRIVING PRECAUTIONS

Utility vehicles have a significantly higher rollover rate than other types of vehicles.

They have higher ground clearance than passenger cars to make them capable of performing in a variety of on-pavement and off-road applications. This gives them a higher center of gravity than ordinary cars. An advantage of higher ground clearance is a better view of the road, allowing you to anticipate problems. However, they are not designed for cornering at the same speeds as conventional two-wheel drive vehicles any more than low-slung sports cars are designed to perform satisfactorily under off-road conditions. If at all possible, avoid sharp turns at high speeds. As with other vehicles of this type, failure to operate this vehicle correctly may result in loss of control or vehicle rollover. In a rollover crash, an unbelted person is significantly more likely to die than a person wearing a seat belt.

Be sure to read the driving safety precautions later in this section.

TIRE PRESSURE MONITORING SYSTEM (TPMS)

Each tire, including the spare (if provided), should be checked monthly when cold and inflated to the inflation pressure recommended by the vehicle manufacturer on the vehicle placard or tire inflation pressure label. (If your vehicle has tires of a different size than the size indicated on the vehicle placard or tire inflation pressure label, you should determine the proper tire inflation pressure for those tires.)

As an added safety feature, your vehicle has been equipped with a tire pressure monitoring system (TPMS) that illuminates a low tire pressure telltale when one or more of your tires is significantly under-inflated. Accordingly, when the low tire pressure telltale illuminates, you should stop and check your tires as soon as possible, and inflate them to the proper pressure. Driving on a significantly under-inflated tire causes the tire to overheat and can lead to tire failure. Under-inflation also reduces fuel efficiency and tire tread life, and may affect the vehicle's handling and stopping ability.

Please note that the TPMS is not a substitute for proper tire maintenance, and it is the driver's responsibility to maintain correct tire pressure,

even if under-inflation has not reached the level to trigger illumination of the TPMS low tire pressure telltale.

Your vehicle has also been equipped with a TPMS malfunction indicator to indicate when the system is not operating properly. The TPMS malfunction indicator is combined with the low tire pressure telltale. When the system detects a malfunction, the telltale will flash for approximately one minute and then remain continuously illuminated. This sequence will continue upon subsequent vehicle start-ups as long as the malfunction exists. When the malfunction indicator is illuminated, the system may not be able to detect or signal low tire pressure as intended. TPMS malfunctions may occur for a variety of reasons, including the installation of replacement or alternate tires or wheels on the vehicle that prevent the TPMS from functioning properly. Always check the TPMS malfunction telltale after replacing one or more tires or wheels on your vehicle to ensure that the replacement or alternate tires and wheels allow the TPMS to continue to function properly.

Additional information:

- This system does not monitor the tire pressure of the spare tire.
- The low tire pressure warning system will activate only when the vehicle is driven at speeds above 16 MPH (26 km/h). Also, this system may not detect a sudden drop in tire pressure (for example a flat tire while driving).
- The low tire pressure warning light does not automatically turn off when the tire pressure is adjusted. After the tire is inflated to the recommended pressure, the vehicle must be driven at speeds above 16 MPH (25 km/h) to activate the TPMS and turn off the low tire pressure warning light. Use a tire pressure gauge to check the tire pressure.
- Tire pressure rises and falls depending on the heat caused by the vehicle's operation and the outside temperature. Low outside temperature can lower the temperature of the air inside the tire which can cause a lower tire inflation pressure. This may cause the low tire pressure warning light to illuminate. If the warning light illuminates in low ambient temperature, check the tire pressure for all four tires.
- You can also check the pressure of all tires (except the spare tire) on the display screen. The order of the tire pressure figures displayed on the screen does not correspond with the actual order of the tire position. See "Tire pressure information" in the "Monitor, climate, audio, phone and voice recognition systems" section.

For additional information, see "Low tire pressure warning light" in the "Instruments and controls" section and "Tire pressure monitoring system" in the "In case of emergency" section.

WARNING

- **If the low tire pressure warning light illuminates while driving, avoid sudden steering maneuvers or abrupt braking, reduce vehicle speed, pull off the road to a safe location and stop the vehicle as soon as possible. Driving with under-inflated tires may permanently damage the tires and increase the likelihood of tire failure. Serious vehicle damage could occur and may lead to an accident and could result in serious personal injury. Check the tire pressure for all four tires. Adjust the tire pressure to the recommended COLD tire pressure shown on the Tire and Loading Information label to turn the low tire pressure warning light OFF. If you have a flat tire, replace it with a spare tire as soon as possible. (See "Flat tire" in the "In case of emergency" section for changing a flat tire.)**

- **When a spare tire is mounted or a wheel is replaced, tire pressure will not be indicated, the TPMS will not function and the low tire pressure warning light will flash for approximately 1 minute. The light will remain on after 1 minute. Contact your INFINITI dealer as soon as possible for tire replacement and/or system resetting.**
- **Replacing tires with those not originally specified by INFINITI could affect the proper operation of the TPMS.**
- **Do not inject any tire liquid or aerosol tire sealant into the tires, as this may cause a malfunction of the tire pressure sensors.**

⚠ CAUTION

Do not place metalized film or any metal parts (antenna, etc.) on the windows. This may cause poor reception of the signals from the tire pressure sensors, and the TPMS will not function properly.

Some devices and transmitters may temporarily interfere with the operation of the TPMS and cause the low tire pressure warning light to illuminate.

Some examples are:

– Facilities or electric devices using similar radio frequencies are near the vehicle.

– If a transmitter set to similar frequencies is being used in or near the vehicle.

– If a computer (or similar equipment) or a DC/AC converter is being used in or near the vehicle.

FCC Notice:

Changes or modifications not expressly approved by the party responsible for compliance could void the user's authority to operate the equipment.

This device complies with Part 15 of the FCC Rules and RSS-210 of Industry Canada.

Operation is subject to the following two conditions: (1) This device may not cause harmful interference, and (2) this device must accept any interference received, including interference that may cause undesired operation of the device.

AVOIDING COLLISION AND ROLLOVER

⚠ WARNING

Failure to operate this vehicle in a safe and prudent manner may result in loss of control or an accident.

Be alert and drive defensively at all times. Obey all traffic regulations. Avoid excessive speed, high speed cornering, or sudden steering maneuvers, because these driving practices could cause you to lose control of your vehicle. **As with any vehicle, loss of control could result in a collision with other vehicles or objects, or cause the vehicle to roll over, particularly if the loss of control causes the vehicle to slide sideways.** Be attentive at all times, and avoid driving when tired. Never drive when under the influence of alcohol or drugs (including prescription or over-the-counter drugs which may cause drowsiness). Always wear your seat belt as outlined in the "Safety – Seats, seat belts and supplemental restraint system" section of this manual, and also instruct your passengers to do so.

Seat belts help reduce the risk of injury in collisions and rollovers. **In a rollover crash, an unbelted or improperly belted person is significantly more likely to be injured or killed than a person properly wearing a seat belt.**

OFF-ROAD RECOVERY

While driving, the right side or left side wheels may unintentionally leave the road surface. If this occurs, maintain control of the vehicle by following the procedure below. Please note that this procedure is only a general guide. The vehicle must be driven as appropriate based on the conditions of the vehicle, road and traffic.

1. Remain calm and do not over react.
2. Do not apply the brakes.
3. Maintain a firm grip on the steering wheel with both hands and try to hold a straight course.
4. When appropriate , slowly release the accelerator pedal to gradually slow the vehicle.
5. If there is nothing in the way, steer the vehicle to follow the road while vehicle speed is reduced. Do not attempt to drive the vehicle back onto the road surface until vehicle speed is reduced.
6. When it is safe to do so, gradually turn the steering wheel until both tires return to the road surface. When all tires are on the road surface, steer the vehicle to stay in the appropriate driving lane.

- If you decide that it is not safe to return the vehicle to the road surface based on vehicle, road or traffic conditions, gradually slow the vehicle to a stop in a safe place off the road.

RAPID AIR PRESSURE LOSS

Rapid air pressure loss or a “blow-out” can occur if the tire is punctured or is damaged due to hitting a curb or pothole. Rapid air pressure loss can also be caused by driving on under-inflated tires.

Rapid air pressure loss can affect the handling and stability of the vehicle, especially at highway speeds.

Help prevent rapid air pressure loss by maintaining the correct air pressure and visually inspect the tires for wear and damage. See “Wheels and tires” in the “Maintenance and do-it-yourself” section of this manual. If a tire rapidly loses air pressure or “blows-out” while driving, maintain control of the vehicle by following the procedure below. Please note that this procedure is only a general guide. The vehicle must be driven as appropriate based on the conditions of the vehicle, road and traffic.

⚠ WARNING

The following actions can increase the chance of losing control of the vehicle if there is a sudden loss of tire air pressure. Losing control of the vehicle may cause a collision and result in personal injury.

- **The vehicle generally moves or pulls in the direction of the flat tire.**
- **Do not rapidly apply the brakes.**
- **Do not rapidly release the accelerator pedal.**
- **Do not rapidly turn the steering wheel.**

1. Remain calm and do not over react.
2. Maintain a firm grip on the steering wheel with both hands and try to hold a straight course.
3. When appropriate, slowly release the accelerator pedal to gradually slow the vehicle.
4. Gradually steer the vehicle to a safe location off the road and away from traffic if possible.
5. Lightly apply the brake pedal to gradually stop the vehicle.

6. Turn on the hazard warning flashers and either contact a roadside emergency service to change the tire or see “Changing a flat tire” in the “In case of emergency” section of this Owner’s Manual.

DRINKING ALCOHOL/DRUGS AND DRIVING

⚠ WARNING

Never drive under the influence of alcohol or drugs. Alcohol in the bloodstream reduces coordination, delays reaction time and impairs judgement. Driving after drinking alcohol increases the likelihood of being involved in an accident injuring yourself and others. Additionally, if you are injured in an accident, alcohol can increase the severity of the injury.

INFINITI is committed to safe driving. However, you must choose not to drive under the influence of alcohol. Every year thousands of people are injured or killed in alcohol-related accidents. Although the local laws vary on what is considered to be legally intoxicated, the fact is that alcohol affects all people differently and most people underestimate the effects of alcohol.

Remember, drinking and driving don’t mix! And that is true for drugs, too (over-the-counter, prescription, and illegal drugs). Don’t drive if your ability to operate your vehicle is impaired by alcohol, drugs, or some other physical condition.

DRIVING SAFETY PRECAUTIONS

Your INFINITI is designed for both normal and off-road use. However, avoid driving in deep water or mud as your INFINITI is mainly designed for leisure use, unlike a conventional off-road vehicle.

Remember that two-wheel drive models are less capable than four-wheel drive models for rough road driving and extrication when stuck in deep snow or mud, or the like.

Please observe the following precautions:

⚠ WARNING

- **Drive carefully when off the road and avoid dangerous areas. Every person who drives or rides in this vehicle should be seated with their seat belt fastened. This will keep you and your passengers in position when driving over rough terrain.**
- **Do not drive across steep slopes. Instead drive either straight up or straight down the slopes. Off-road vehicles can tip over sideways much more easily than they can forward or backward.**
- **Many hills are too steep for any vehicle. If you drive up them, you may stall. If you drive down them, you may not be able to control your speed. If you drive across them, you may roll over.**
- **Do not shift gears while driving on downhill grades as this could cause loss of control of the vehicle.**
- **Stay alert when driving to the top of a hill. At the top there could be a drop-off or other hazard that could cause an accident.**
- **If your engine stalls or you cannot make it to the top of a steep hill, never attempt to turn around. Your vehicle could tip or roll over. Always back straight down in R (Reverse) gear and apply brakes to control your speed.**
- **Heavy braking going down a hill could cause your brakes to overheat and fade, resulting in loss of control and an accident. Apply brakes lightly and use a low gear to control your speed.**

- **Unsecured cargo can be thrown around when driving over rough terrain. Properly secure all cargo so it will not be thrown forward and cause injury to you or your passengers.**
- **To avoid raising the center of gravity excessively, do not exceed the rated capacity of the roof rack and evenly distribute the load. Secure heavy loads in the cargo area as far forward and as low as possible. Do not equip the vehicle with tires larger than specified in this manual. This could cause your vehicle to roll over.**
- **Do not grip the inside or spokes of the steering wheel when driving off-road. The steering wheel could move suddenly and injure your hands. Instead drive with your fingers and thumbs on the outside of the rim.**
- **Before operating the vehicle, ensure that the driver and all passengers have their seat belts fastened.**
- **Lower your speed when encountering strong crosswinds. With a higher center of gravity, your INFINITI is more affected by strong side winds. Slower speeds ensure better vehicle control.**
- **Do not drive beyond the performance capability of the tires, even with 4WD engaged.**
- **For 4WD equipped vehicles, do not attempt to raise two wheels off the ground and shift the transmission to any drive or reverse position with the engine running. Doing so may result in drivetrain damage or unexpected vehicle movement which could result in serious vehicle damage or personal injury.**
- **Do not attempt to test a 4WD equipped vehicle on a 2-wheel dynamometer (such as the dynamometers used by some states for emissions testing), or similar equipment even if the other two wheels are raised off the ground. Make sure you inform test facility personnel that your vehicle is equipped with 4WD before it is placed on a dynamometer. Using the wrong test equipment may result in drivetrain damage or unexpected vehicle movement which could result in serious vehicle damage or personal injury.**
- **Accelerating quickly, sharp steering maneuvers or sudden braking may cause loss of control.**
- **If at all possible, avoid sharp turning maneuvers, particularly at high speeds. Your INFINITI four-wheel drive vehicle has a higher center of gravity than a two-wheel drive vehicle. The vehicle is not designed for cornering at the same speeds as conventional two-wheel drive vehicles. Failure to operate this vehicle correctly could result in loss of control and/or a rollover accident.**
- **Always use tires of the same type, size, brand, construction (bias, bias-belted, or radial), and tread pattern on all four wheels. Install tire chains on the rear wheels when driving on slippery roads and drive carefully.**
- **Be sure to check the brakes immediately after driving in mud or water. See "Brake system" later in this section for "Wet brakes".**
- **Avoid parking your vehicle on steep hills. If you get out of the vehicle and it rolls forward, backward or sideways, you could be injured.**

- **Whenever you drive off-road through sand, mud or water as deep as the wheel hub, more frequent maintenance may be required. See “Periodic maintenance” in the “INFINITI Service and Maintenance Guide.”**

⚠ WARNING

Never turn the ignition knob to the LOCK position while driving. The steering wheel will lock. This may cause the driver to lose control of the vehicle and could result in serious vehicle damage or personal injury.

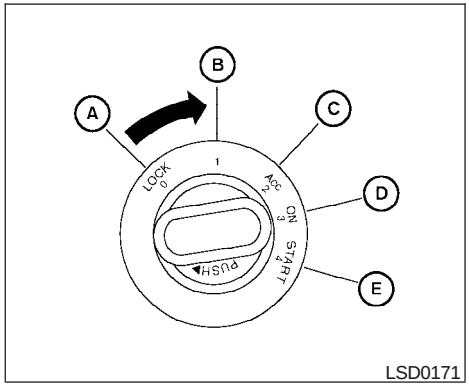

LSD0171

INTELLIGENT KEY SYSTEM

The ignition lock is designed so that the ignition switch cannot be turned to LOCK until the shift selector lever is moved to the P (Park) position.

When turning the ignition switch, make sure the shift selector lever is in the P (Park) position.

If the shift selector lever is not returned to the P (Park) position, the ignition switch cannot be moved toward LOCK.

When the ignition switch cannot be turned toward the LOCK position when the Intelligent Key is in range, proceed as follows:

1. Move the shift selector lever into the P (Park) position.
2. Turn the ignition switch slightly in the ON direction.
3. Turn the key toward the LOCK position.

The shift selector lever can be moved from the P (Park) position if the ignition switch is in the ON position and the foot brake pedal is depressed.

There is an OFF position in between LOCK and ACC, although it does not show on the lock cylinder. When the ignition is in OFF the steering wheel is not locked.

In order for the steering wheel to be locked, it must be turned about 1/6 of a turn counterclockwise from the straight up position.

To lock the steering wheel, turn the ignition switch to the LOCK position. To unlock the steering wheel, push the ignition switch in and turn it gently while rotating the steering wheel slightly right and left.

If the battery of the vehicle equipped with the Intelligent Key system is discharged, the ignition switch cannot be turned from the LOCK position, even using the mechanical key.

IGNITION SWITCH POSITIONS

Push in the ignition switch to the Ⓑ position when you turn it.

LOCK (Normal parking position) Ⓐ :

The ignition switch can only be locked in the LOCK position.

The ignition switch will be unlocked when it is pushed in, and turned to the ACC position Ⓒ while carrying the Intelligent Key.

ACC (Accessories) Ⓒ :

This position activates electrical accessories such as the radio, when the engine is not running.

ON (Normal operating position) Ⓓ :

This position turns on the ignition system and the electrical accessories.

START Ⓔ :

This position starts the engine. As soon as the engine has started, release the knob immediately. It will automatically return to the ON position.

The ignition switch cannot be turned back to the LOCK position unless the selector lever is in the P (Park) position. (It can be turned only to the Ⓑ position.)

⚠ CAUTION

Do not leave the vehicle with the ignition switch in ACC or ON positions when the engine is not running for an extended period. This can discharge the battery.

INFINITI VEHICLE IMMOBILIZER SYSTEM

The INFINITI Vehicle Immobilizer System will not allow the engine to start without the use of the registered key.

If the engine fails to start using the registered key, it may be due to interference caused by another registered key, an automated toll road device or automated payment device on the key ring. Restart the engine using the following procedures:

1. Leave the ignition switch in the ON position for approximately 5 seconds.
2. Turn the ignition switch to the OFF or LOCK position and wait approximately 5 seconds.
3. Repeat step 1 and 2 again.

4. Restart the engine while holding the device (which may have caused the interference) separate from the registered key.

If the no start condition re-occurs, INFINITI recommends placing the registered key on a separate key ring to avoid interference from other devices.

BEFORE STARTING THE ENGINE

- Make sure the area around the vehicle is clear.
- Check fluid levels such as engine oil, coolant, brake fluid, and window washer fluid as frequently as possible, or at least whenever you refuel.
- Check that all windows and lights are clean.
- Visually inspect tires for their appearance and condition. Also check tires for proper inflation.
- Check that all doors are closed.
- Position seat and adjust head restraint.
- Adjust inside and outside mirrors.
- Fasten seat belts and ask all passengers to do likewise.
- Check the operation of warning lights when the key is turned to the ON (3) position. See "Warning/indicator lights and audible reminders" in the "Instruments and controls" section of this manual.

STARTING THE ENGINE

1. Apply the parking brake.
2. Move the shift selector lever to P (Park) or N (Neutral). P (Park) is recommended.

   The shift selector lever cannot be moved out of P (Park) and into any of the other gear positions if the ignition key is turned to the OFF position or if the key is removed from the ignition switch.

   The starter is designed not to operate if the shift selector lever is in any of the driving positions.
3. Crank the engine **with your foot off the accelerator pedal** by turning the ignition key to START. Release the key when the engine starts. If the engine starts, but fails to run, repeat the above procedure.
   - If the engine is very hard to start in extremely cold weather or when restarting, depress the accelerator pedal a little (approximately 1/3 to the floor) and hold it and then crank the engine. Release the key and the accelerator pedal when the engine starts.
   - If the engine is very hard to start because it is flooded, depress the accelerator pedal all the way to the floor and hold it. Crank the engine for 5-6 seconds. After

cranking the engine, release the accelerator pedal. Crank the engine **with your foot off the accelerator pedal** by turning the ignition key to START. Release the key when the engine starts. If the engine starts, but fails to run, repeat the above procedure.

⚠ CAUTION

Do not operate the starter for more than 15 seconds at a time. If the engine does not start, turn the key off and wait 10 seconds before cranking again, otherwise the starter could be damaged.

4. Allow the engine to idle for at least 30 seconds after starting. Do not race the engine while warming it up. Drive at moderate speed for a short distance first, especially in cold weather.

   In cold weather, keep the engine running for a minimum of 2–3 minutes before shutting it off. Starting and stopping the engine over a short period of time may make the vehicle more difficult to start.

ENGINE PROTECTION MODE

The engine has an engine protection mode to reduce the chance of damage if the coolant temperature becomes too high (for example, when climbing steep grades in high temperature with heavy loads, such as when towing a trailer). When the engine temperature reaches a certain level:

- The engine coolant temperature gauge will move toward the H position.
- Engine power may be reduced.
- The air conditioning cooling function may be automatically turned OFF for a short time (the blower will continue to operate).

Engine power and, under some conditions, vehicle speed will decrease. Vehicle speed can be controlled with the accelerator pedal, but the vehicle may not accelerate at the desired speed. The transmission will downshift or upshift as it reaches prescribed shift points. You can also shift manually.

As driving conditions change and engine coolant temperature is reduced, vehicle speed can be increased using the accelerator pedal, and air conditioning cooling function will automatically be turned back ON.

If:

1. The engine coolant temperature is not reduced.
2. The air conditioning cooling function does not turn back ON.
3. The engine oil pressure warning/engine coolant temperature high indicator illuminates, this may indicate a malfunction. Move the vehicle off the road in a safe area and allow the engine to cool. If after checking the oil and coolant, the remains on, do not continue to drive and call an INFINITI dealer.

The malfunction indicator lamp may also come ON. If **only** it remains on, you do not need to have your vehicle towed, but have it inspected soon by an INFINITI dealer. See “Malfunction indicator light” in the “Warning and indicator lights” section of this manual.

⚠ WARNING

Overheating can result in reduced engine power and vehicle speed. The reduced speed may be lower than other traffic, which could increase the chance of a collision. Be especially careful when driving. If the vehicle cannot maintain a safe driving speed, pull to the side of the road in a safe area. Allow the engine to cool and return to normal operation. See "If your vehicle overheats" in the "In case of emergency" section of this manual.

⚠ CAUTION

Running the engine with the engine oil pressure warning light on could cause serious damage to the engine almost immediately. Such damage is not covered by warranty. Turn off the engine as soon as it is safe to do so.

AUTOMATIC TRANSMISSION

⚠ WARNING

- **Do not depress the accelerator pedal while shifting from P (Park) or N (Neutral) to R (Reverse), or L (Low). Always depress the brake pedal until shifting is completed. Failure to do so could cause you to lose control and have an accident.**
- **Cold engine idle speed is high, so use caution when shifting into a forward or reverse gear before the engine has warmed up.**
- **Never shift to P (Park) or R (Reverse) while the vehicle is moving. This could cause an accident.**

⚠ CAUTION

- **When stopping the vehicle on an uphill grade, do not hold the vehicle by depressing the accelerator pedal. The foot brake should be used for this purpose.**
- **Do not downshift abruptly on slippery roads. This may cause a loss of control.**

The automatic transmission in your vehicle is electronically controlled to produce maximum power and smooth operation.

The recommended operating procedures for this transmission are shown on the following pages. Follow these procedures for maximum vehicle performance and driving enjoyment.

Starting the vehicle

1. After starting the engine, fully depress the foot brake pedal before moving the shift selector lever out of the P (Park) position.
2. Keep the foot brake pedal depressed and move the shift selector lever into a driving gear.
3. Release the foot brake, then gradually start the vehicle in motion.

The automatic transmission is designed so the foot brake pedal MUST be depressed before shifting from P (Park) to any drive position while the ignition switch is in the ON position.

The shift selector lever cannot be moved out of P (Park) and into any of the other gear positions if the ignition key is turned to the LOCK, OFF or ACC position or if the key is removed.

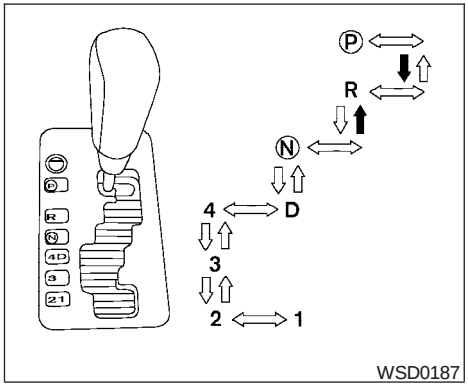

To move the selector lever:

➡ : Shift while depressing the brake pedal

⇨ : Shift without depressing brake pedal

Shifting

After starting the engine, fully depress the brake pedal and move the shift selector lever out of the P (Park) position.

⚠ WARNING

Apply the parking brake if the selector lever is in any position while the engine is not running. Failure to do so could cause the vehicle to move unexpectedly or roll away and result in serious personal injury or property damage.

If the key is turned to the OFF or ACC position for any reason while the vehicle is in N (Neutral), or any D (Drive) position, the key cannot be turned to the LOCK position and be removed from the ignition switch. Move the selector lever to the P (Park) position, then the key can be turned to LOCK.

P (Park):

⚠ CAUTION

To prevent transmission damage, use the P (Park) or R (Reverse) position only when the vehicle is completely stopped.

Use the P (Park) selector position when the vehicle is parked or when starting the engine. Make sure the vehicle is completely stopped. **The brake pedal should be depressed to move the selector lever from N (Neutral) or any drive position to P (Park).** Apply the parking brake. When parking on a hill, apply the parking brake first, then shift the selector lever into the P (Park) position.

R (Reverse):

⚠ CAUTION

To prevent transmission damage, use the P (Park) or R (Reverse) position only when the vehicle is completely stopped.

Use the R (Reverse) position to back up. Make sure the vehicle is completely stopped before selecting the R (Reverse) position. **The brake pedal must be depressed to move the selector lever from P (Park), N (Neutral) or any drive position to R (Reverse).**

N (Neutral):

Neither forward nor reverse gear is engaged. The engine can be started in this position. You may shift to N (Neutral) and restart a stalled engine while the vehicle is moving.

D (Drive):

Use this position for all normal forward driving.

4 (Fourth gear):

Use this position for driving up and down long slopes where engine braking would be advantageous.

Do not downshift into the 4 position at speeds over the following and do not exceed the following speeds in the 4 position.

4H:

62 MPH (100 km/h)

4LO:

31 MPH (50 km/h)

3 (Third gear):

Use this position for driving up and down long slopes where engine braking would be advantageous.

2 (Second gear):

Use this position for hill climbing or engine braking on downhill grades.

Do not downshift into the 2 position at speeds over the following and do not exceed the following speeds in the 2 position.

2WD and AUTO:

71 MPH (115 km/h) w/o tow mode

62 MPH (100 km/h) w/tow mode

4H:

62 MPH (100 km/h)

4LO:

31 MPH (50 km/h)

1 (Low gear):

Use this position when climbing steep hills slowly or slow driving through deep snow, sand or mud, or for maximum engine braking on steep downhill grades.

Do not downshift into the 1 position at speeds over the following and do not exceed the following speeds in the 1 position.

2WD and AUTO:

43 MPH (70 km/h) w/o tow mode

37 MPH (60 km/h) w/tow mode

4H:

43 MPH (70 km/h) w/o tow mode

37 MPH (60 km/h) w/tow mode

4LO:

31 MPH (50 km/h)

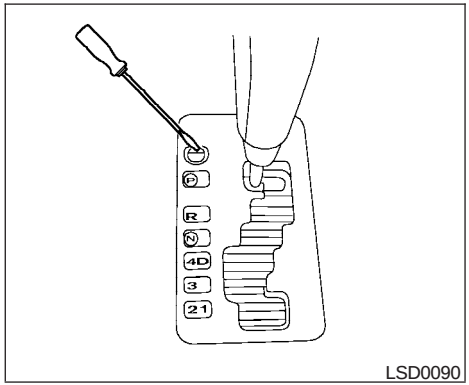

Shift lock release

If the battery is discharged, the shift selector lever may not be moved from the P (Park) position even with the brake pedal depressed.

To move the shift selector lever, release the shift lock. The shift selector lever can be moved to N (Neutral). However, the steering wheel will be locked unless the ignition switch is turned to the ON position. This allows the vehicle to be moved if the battery is discharged.

To push the shift lock release, complete the following procedure:

1. Turn the ignition key to the LOCK position and remove the key
2. Apply the parking brake.
3. Remove the shift lock release cover as shown.
4. Insert a small screwdriver in the shift lock release slot and push down.
5. Move the shift selector lever to the N (Neutral) position while holding down the shift lock release.
6. Turn the key to the ON position to unlock the steering wheel. Now the vehicle may be moved to the desired location.

If the shift selector lever cannot be moved out of P (Park), have an INFINITI dealer check the automatic transmission system as soon as possible.

⚠ WARNING

If the selector lever cannot be moved from the P (Park) position while the engine is running and the brake pedal is depressed, the stop lights may not work. Malfunctioning stop lights could cause an accident injuring yourself and others.

Accelerator downshift — in D position —

For passing or hill climbing, depress the accelerator pedal to the floor. This shifts the transmission down into a lower gear, depending on the vehicle speed.

Fail-safe

When the fail-safe operation occurs, please note that the transmission will be locked in any of the forward gears according to the condition.

If the vehicle is driven under extreme conditions, such as excessive wheel spinning and subsequent hard braking, the fail-safe system may be activated. This will occur even if all electrical circuits are functioning properly. In this case, turn the ignition key OFF and wait for 3 seconds. Then turn the key back to the ON position. The vehicle should return to its normal operating condition. If it does not return to its normal operating condition, have an INFINITI dealer check the transmission and repair it if necessary.

⚠ WARNING

- **Be sure the parking brake is fully released before driving. Failure to do so can cause brake failure and lead to an accident.**
- **Do not release the parking brake from outside the vehicle.**
- **Do not use the gear shift in place of the parking brake. When parking, be sure the parking brake is fully engaged.**
- **Do not leave children unattended in a vehicle. They could release the parking brake and cause an accident.**

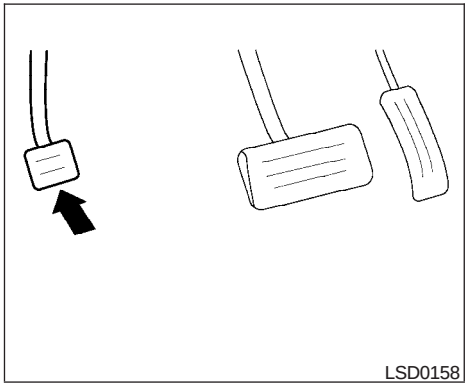

To engage: Firmly depress the parking brake.

To release:

1. Firmly apply the foot brake.
2. Move the shift selector lever to the P (Park) position.
3. Firmly depress the parking brake pedal and it will release.
4. Before driving, be sure the brake warning light goes out.

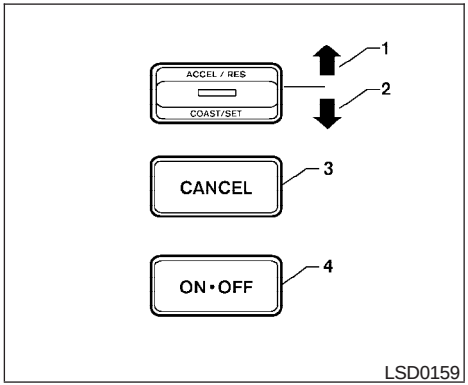

1. ACCEL/RES switch
2. COAST/SET switch
3. CANCEL switch
4. ON·OFF switch

PRECAUTIONS ON CRUISE CONTROL

- If the cruise control system malfunctions, it cancels automatically. The SET indicator light in the vehicle information display then blinks to warn the driver, see “Vehicle information display” in the “Instruments and controls” section.
- If the SET indicator light blinks, turn the cruise control switch off and have the system checked by an INFINITI dealer.
- The SET indicator light may blink when the cruise control main switch is turned ON while pushing the ACCEL/RES, COAST/SET, or CANCEL switch (located on the steering wheel). To properly set the cruise control system, use the following procedures.

⚠ WARNING

Do not use the cruise control when driving under the following conditions:

- **When it is not possible to keep the vehicle at a set speed.**
- **In heavy traffic or in traffic that varies in speed.**
- **On winding or hilly roads.**
- **On slippery roads (rain, snow, ice, etc.).**
- **In very windy areas.**

Doing so could cause a loss of vehicle control and result in an accident.

CRUISE CONTROL OPERATIONS

The cruise control allows driving at a speed between 25 - 89 MPH (40 - 144 km/h) without keeping your foot on the accelerator pedal.

To turn on the cruise control, push the ON·OFF switch on. The CRUISE indicator light in the vehicle information display will illuminate.

To set cruising speed, accelerate the vehicle to the desired speed, push the COAST/SET switch and release it. The SET indicator light in the vehicle information display will illuminate. Take your foot off the accelerator pedal. Your vehicle maintains the set speed.

- **To pass another vehicle,** depress the accelerator pedal. When you release the pedal, the vehicle returns to the previously set speed.
- The vehicle may not maintain the set speed when going up or down steep hills. If this happens, drive without the cruise control.

To cancel the preset speed, use one of the following three methods.

- Push the CANCEL button; the SET indicator light in the vehicle information display goes out.
- Tap the brake pedal; the SET indicator light goes out.
- Push the ON·OFF switch off. Both the CRUISE indicator light and SET indicator light in the vehicle information display go out.

The cruise control is automatically canceled and the SET light in the vehicle information display goes out if:

- you depress the brake pedal while pushing the ACCEL/RES or SET/COAST switch. The preset speed is deleted from memory.
- the vehicle slows down more than 8 MPH (13 km/h) below the set speed.
- you move the shift selector lever to N (Neutral).

To reset at a faster cruising speed, use one of the following three methods.

- Depress the accelerator pedal. When the vehicle attains the desired speed, push and release the COAST/SET switch.
- Push and hold the ACCEL/RES switch. When the vehicle attains the speed you desire, release the switch.
- Push and release the ACCEL/RES switch. Each time you do this, the set speed increases by about 1 MPH (1.6 km/h).

To reset at a slower cruising speed, use one of the following three methods.

- Lightly tap the brake pedal. When the vehicle attains the desired speed, push the COAST/SET switch and release it.
- Push and hold the COAST/SET switch. Release the switch when the vehicle slows to the desired speed.
- Push and release the COAST/SET switch. Each time you do this, the set speed decreases by about 1 MPH (1.6 km/h).

To resume the preset speed, push and release the ACCEL/RES switch. The vehicle returns to the last set cruising speed when the vehicle speed is over 25 MPH (40 km/h).

INTELLIGENT CRUISE CONTROL SYSTEM (if so equipped)

The Intelligent Cruise Control (ICC) system automatically maintains a selected distance from the vehicle in front of you according to that vehicle's speed, or at the set speed, if the road ahead is clear.

The ICC function has two cruise control modes:

- Vehicle-to-vehicle distance control mode for maintaining a selected distance between a vehicle up to the preset speeds.
- Conventional (fixed speed) cruise control mode for cruising at preset speeds.

⚠ WARNING

Always drive carefully and attentively when using either cruise control mode. Read and understand the Owner's Manual thoroughly before using the cruise control. To avoid serious injury or death, do not rely on the system to prevent accidents or to control the vehicle's speed in emergency situations. Do not use cruise control except in appropriate road and traffic conditions.

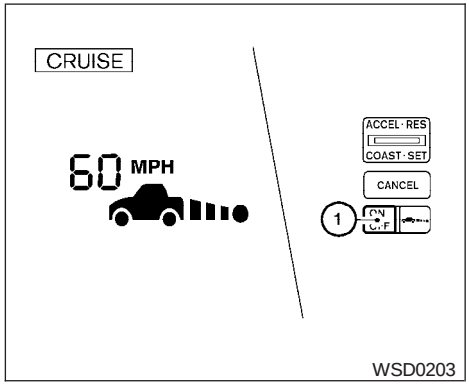

Vehicle-to-vehicle distance control mode

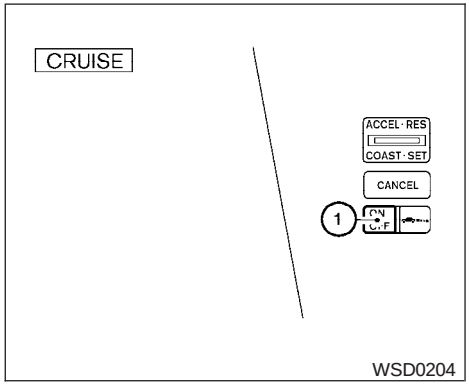

Conventional (fixed speed) cruise control mode

SELECTING THE INTELLIGENT CRUISE CONTROL MODE

When you push the ON/OFF switch ①, you can choose the cruise control mode between the vehicle-to-vehicle distance control mode and the conventional (fixed speed) cruise control mode.

To choose the vehicle-to-vehicle distance control mode, push the ON/OFF switch quickly. The CRUISE indicator light will appear in the vehicle information display.

Once a control mode is chosen and activates, it cannot be changed to the other cruise control mode. To change the mode, push the ON/OFF switch once, then turn on the system again.

Always confirm the setting in the vehicle information display.

⚠ WARNING

- **In the conventional (fixed speed) cruise control mode, a warning chime will not sound to warn you if you are too close to the vehicle ahead.**
- **Pay special attention to the distance between your vehicle and the vehicle ahead of you or a collision could occur.**

For the vehicle-to-vehicle distance control mode, see the following description. For the conventional (fixed speed) cruise control mode, see "Conventional (fixed speed) cruise control mode" later in this section.

VEHICLE-TO-VEHICLE DISTANCE CONTROL MODE

In the vehicle-to-vehicle distance control mode, the Intelligent Cruise Control (ICC) system automatically maintains a selected distance from the vehicle in front of you according to that vehicle's speed, up to the set speed or at the set speed when the road ahead is clear.

With ICC, the driver can maintain the same speed as other vehicles without the constant need to adjust the speed as you would with a normal cruise control system.

PRECAUTIONS ON VEHICLE-TO-VEHICLE DISTANCE CONTROL MODE

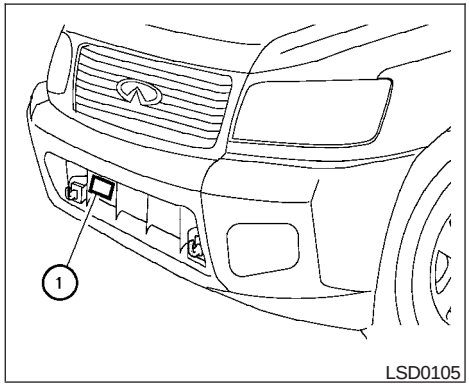

The system is intended to enhance the operation of the vehicle when following another vehicle traveling in the same lane and direction.

If the distance sensor ① detects a slower moving vehicle ahead of you, the system will reduce your speed so that you follow the vehicle in front of you at the selected distance.

The system automatically controls the throttle and applies the brakes (up to 25% of vehicle braking power) if necessary.

The detection range of the sensor is approximately 390 ft (120 m) ahead.

⚠WARNING

- **This system is only an aid to assist the driver and is not a collision warning or avoidance device. It is the driver's responsibility to stay alert, drive safely and be in control of the vehicle at all times.**
- **The system is primarily intended for use on straight, dry, open roads with light traffic. It is not advisable to use the system in city traffic or congested areas.**
- **This system will not adapt automatically to road conditions. This system should be used in evenly flowing traffic. Do not use the system on roads with sharp curves, or on icy roads, in heavy rain or in fog.**

The distance sensor will not detect under most conditions:

- Stationary and slow moving vehicles
- Pedestrians or objects in the roadway
- Oncoming vehicles in the same lane
- Motorcycles or scooters traveling offset in the travel lane

This system will not automatically brake the vehicle to a stop.

⚠WARNING

- **As there is a performance limit to the distance control function, never rely solely on the Intelligent Cruise Control system. This system does not correct careless, inattentive or absent-minded driving, or overcome poor visibility in rain, fog, or other bad weather. Decelerate the vehicle speed by depressing the brake pedal, depending on the distance to the vehicle ahead and the surrounding circumstances in order to maintain a safe distance between vehicles.**
- **Although the brake operation is controlled by the system, the system does not automatically stop the vehicle. If the vehicle speed falls below approximately 20 MPH (32 km/h), the Intelligent Cruise Control system is automatically canceled and a warning chime sounds. (The brake control is also canceled.)**
- **The system may not detect the vehicle in front of you in certain road or weather conditions. To avoid accidents, never use the Intelligent Cruise Control system under the following conditions:**
  - **On roads where the traffic is heavy or there are sharp curves.**
  - **On slippery road surfaces such as on ice or snow, etc.**
  - **During bad weather (rain, fog, snow, etc.) (When the windshield wiper is operated at the low speed (LO) or high speed (HI) position, the Intelligent Cruise Control system is automatically canceled.)**
  - **When strong light (for example, at sunrise or sunset) is directly shining on the front of the vehicle.**
  - **When rain, snow or dirt adhere to the system sensor.**
  - **On steep downhill roads (the vehicle may go beyond the set vehicle speed and frequent barking may result in overheating the brakes).**
  - **On repeated uphill and downhill roads.**

- **When traffic conditions make it difficult to keep a proper distance between vehicles because of frequent acceleration or deceleration.**

- **Do not use the Intelligent Cruise Control system if you are towing a trailer. The system may not detect a vehicle ahead.**
- **In some road or traffic conditions, a vehicle or object can unexpectedly come into the sensor detection zone and cause automatic braking. You may need to control the distance from other vehicles using the accelerator pedal. Always stay alert and avoid using the ICC system when it is not recommended in this section.**

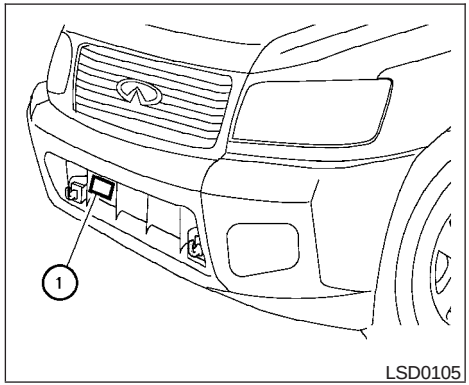

Vehicle-to-vehicle distance mode operation

Always pay attention to the operation of the vehicle and be ready to manually control the proper following distance. The Intelligent Cruise Control (ICC) system may not be able to maintain the selected distance between vehicles (following distance) or selected vehicle speed under some circumstances.

The vehicle-to-vehicle distance control mode uses a sensor ① located on the front of the vehicle to detect vehicles ahead. The sensor generally detects the signals returned from the reflectors on a vehicle ahead. Therefore, if the sensor cannot detect the reflector of the vehicle ahead, the ICC system may not maintain the selected distance.

The following are some conditions in which the sensor cannot detect the signals:

- When the reflector is positioned high on the vehicle (trailer, etc.).
- When the reflector on the vehicle ahead is missing, damaged or covered.
- When the reflector is covered with dirt, snow and road spray.
- When the snow or road spray from other vehicles reduces the sensor's visibility.
- When dense exhaust or other smoke (black smoke) from vehicles reduces the sensor's visibility.
- When excessively heavy baggage is loaded in the rear seat or the cargo area of your vehicle.
- When your vehicle is towing a trailer, etc.

The ICC system is designed to automatically check the sensor's operation. When the sensor is covered with dirt or obstructions, the system will automatically be canceled while allowing conventional cruise control to remain operational. If the sensor is covered with ice, a transparent or

translucent vinyl bag, etc., the ICC system may not detect them. In these instances, the vehicle-to-vehicle distance control mode may not cancel and may not be able to maintain the selected following distance from the vehicle ahead. Be sure to clean the sensor regularly.

The vehicle-to-vehicle distance control mode is designed to maintain a selected distance and reduce the speed to match the speed of a slower vehicle ahead; the system decelerates the vehicle as necessary. However, the ICC system can only apply up to 25% of the vehicle's total braking power. This system should only be used when traffic conditions allow vehicle speeds to remain fairly constant or vehicle speeds change gradually. If a vehicle moves into the traveling lane ahead or if a vehicle traveling ahead rapidly decelerates, the distance between vehicles may become closer because the ICC system cannot decelerate the vehicle quickly enough. If this occurs, the ICC system will sound a warning chime and blink the system display to notify the driver to take necessary action.

The system will cancel and a warning chime will sound if the speed falls below approximately 20 MPH (32km/h). The system will also disengage below the 20 MPH (32km/h) cut-off speed or over the maximum set speed.

Refer to "Approach warning" later in this section.

The following items are controlled when the selector lever is in any D (Drive) position.

- When there are no vehicles traveling ahead, the vehicle-to-vehicle distance control mode maintains the speed set by the driver. The set speed range is between approximately 25 and 89 MPH (40 and 144 km/h).
- When there is a vehicle traveling ahead, the vehicle-to-vehicle distance control mode adjusts the speed to maintain the distance selected by the driver from the vehicle ahead. The adjusting speed range is between approximately 20 MPH (32 km/h) and the set speed.
- When the vehicle traveling ahead has moved out from its lane of travel, the vehicle-to-vehicle distance control mode accelerates and maintains speed up to the set speed.

The ICC system does not control vehicle speed or warn you when you approach stationary and slow moving vehicles. You must pay attention to vehicle operation to maintain proper distance from vehicles ahead when approaching toll gates or traffic congestion.

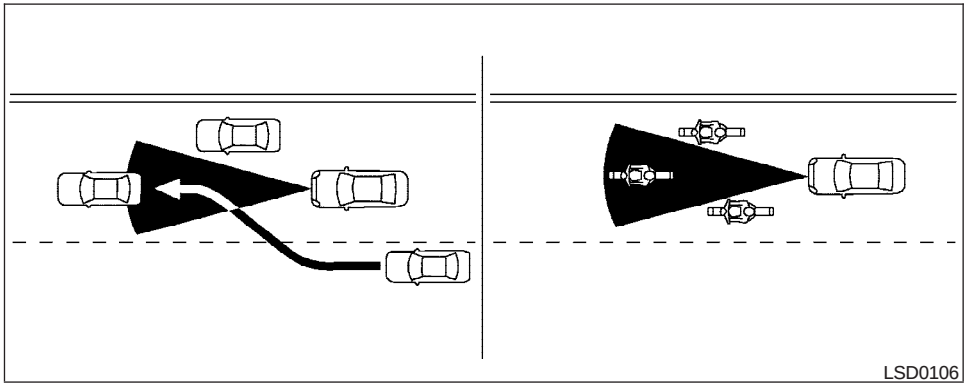

The detection zone of the ICC sensor is limited. A vehicle ahead must be in the detection zone for the vehicle-to-vehicle distance detection mode to maintain the selected distance from the vehicle ahead.

A vehicle ahead may move outside of the detection zone due to its position within the same lane of travel. Motorcycles may not be detected in the same lane ahead if they are traveling offset from the centerline of the lane. A vehicle that is entering the lane ahead may not be detected until the vehicle has completely moved in the lane. **If this occurs, the ICC system may warn you by blinking the system indicator and sounding the chime. The driver may have to manually control the proper distance away from vehicle traveling ahead.**

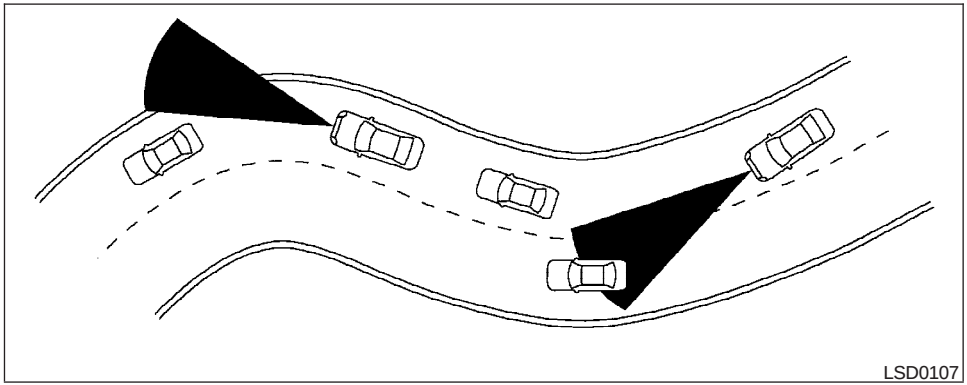

When driving on some roads, such as winding, hilly, curved, narrow, or roads which are under construction, the ICC sensor may detect vehicles in a different lane, or may temporarily not detect a vehicle traveling ahead. This may cause the ICC system to decelerate or accelerate the vehicle.

The detection of vehicles can be affected by vehicle operation (steering maneuver or driving position in the lane) or vehicle condition. **If this occurs, the ICC system may warn you by blinking the system indicator and sounding the chime unexpectedly. You will have to manually control the proper distance away from the vehicle traveling ahead.**

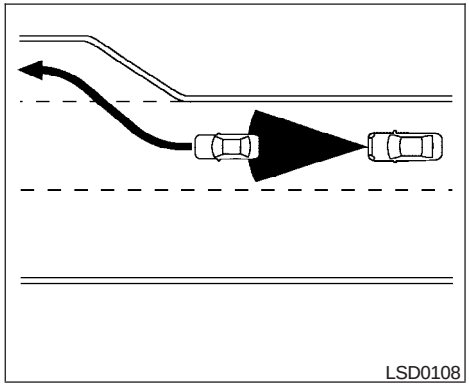

When driving on the freeway at a set speed and approaching a slower traveling vehicle ahead, the ICC will adjust the speed to maintain the distance, selected by the driver, from the vehicle ahead. If the vehicle ahead changes lanes or exits the freeway, the ICC system will accelerate and maintain the speed up to the set speed. Pay attention to the driving operation to maintain control of the vehicle as it accelerates to the set speed.

The vehicle may not maintain the set speed on winding or hilly roads. If this happens, drive without the ICC system.

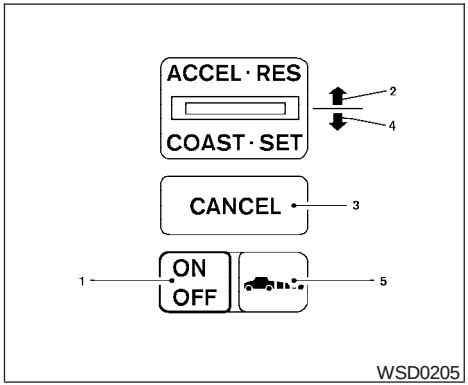

Intelligent cruise control switch

The system is operated by a master ON/OFF switch and four control switches, all mounted on the steering wheel.

1. ON/OFF switch:
   Master switch to activate the system
2. ACCELERATE/RESUME switch:
   Resumes set speed or increases speed incrementally.
3. CANCEL switch:
   Deactivates the system without erasing the set speed.
4. COAST/SET switch:
   Sets desired cruise speed, reduces speed incrementally.
5. DISTANCE switch:
   Changes the following distance to; long, medium, short.

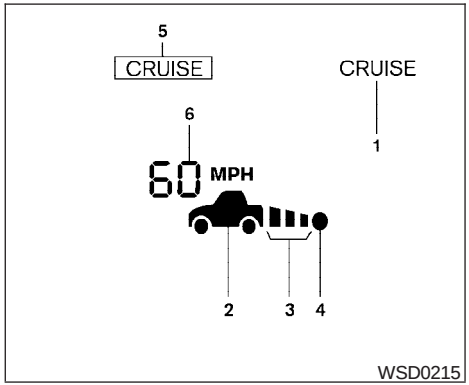

Intelligent cruise control system display

The display is located within the vehicle information display.

1. Intelligent Cruise Control system warning light (Orange)

   The light comes on in the instrument panel if there is a malfunction in the ICC system.
2. Vehicle ahead detection indicator

   Indicates whether it detects a vehicle in front of you.

3. Set distance indicator

   Displays the selected distance between vehicles set with the DISTANCE switch.

4. Indicates your vehicle
5. CRUISE indicator light

   The light illuminates in the vehicle information display and indicates that the ON/OFF switch is ON.

6. Set vehicle speed indicator

   Indicates the set vehicle speed.

For Canadian models, the speed will be indicated by km/h.

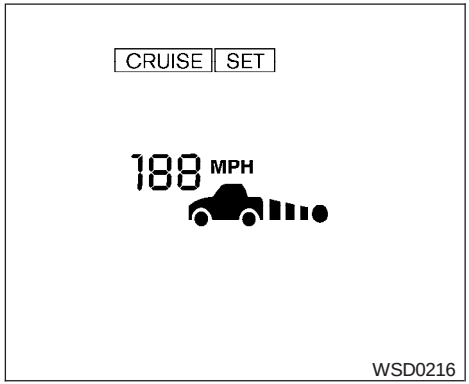

System check display

When the key switch is turned ON, the display comes on as illustrated to check for a display malfunction, and it turns off when the engine is started.

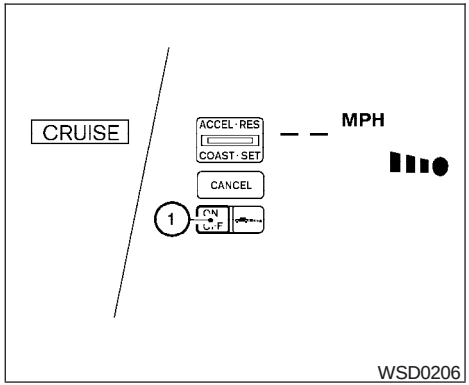

Operating vehicle-to-vehicle distance control mode

To turn on the cruise control, push the ON/OFF switch ① on. The CRUISE indicator light, set distance indicator and set vehicle speed indicator come on, and they are on a standby state for setting.

⚠ CAUTION

To avoid accidentally engaging cruise control, make sure to turn the ON/OFF switch off when not using the Intelligent Cruise Control.

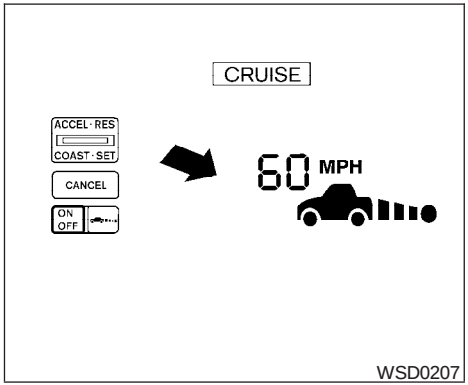

To set cruising speed, accelerate your vehicle to the desired speed, push the COAST/SET switch and release it. (Vehicle ahead detection indicator, set distance indicator and set vehicle speed indicator come on.) Take your foot off the accelerator pedal. Your vehicle will maintain the set speed. The CRUISE indicator light in the vehicle information display remains on.

The Intelligent Cruise Control system cannot be set under the following conditions even if the COAST/SET switch is pushed.

- When traveling outside the 25 to 89 MPH (40 to 144 km/h) speed range.
- When the selector lever is not in the D (Drive), 4, 3, 2, or 1 position.
- While the vehicle is being braked by the driver.
- When pressing the ACCEL/RES switch without there being a set speed in memory.
- When the windshield wipers are operating.
- When the parking brake is applied.
- When the Vehicle Dynamic Control (VDC) system is switched off.

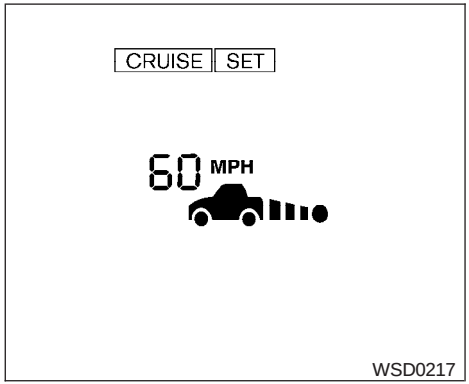

System set display with vehicle ahead

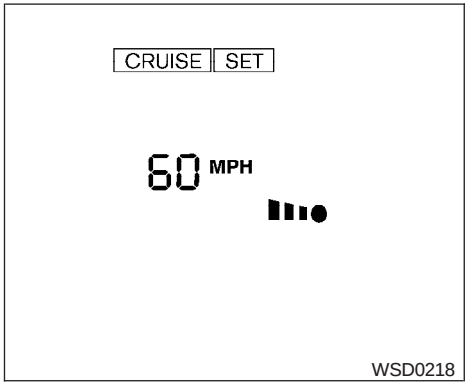

System set display without vehicle ahead

System operation

⚠ WARNING

Normally when controlling the distance to a vehicle ahead, this system automatically accelerates or decelerates your vehicle according to the speed of the vehicle ahead. Depress the accelerator to properly accelerate your vehicle when acceleration is required for a lane change. Depress the brake pedal when deceleration is required to maintain a safe distance to the vehicle ahead due to its sudden braking or if a vehicle cuts in. Always stay alert when using the ICC system.

The driver sets the desired vehicle speed based on the road conditions. The ICC system maintains the set vehicle speed, similar to standard cruise control, as long as no vehicle is detected in the lane ahead.

The ICC system displays the set speed. The CRUISE indicator light in the vehicle information display comes on.

Vehicle detected ahead:

When a vehicle is detected in the lane ahead, the ICC system decelerates the vehicle by controlling the throttle and applying the brakes to match the speed of a slower vehicle ahead. The system then controls the vehicle speed based on the speed of the vehicle ahead to maintain a driver selected distance.

The stoplights of the vehicle come on and the brake pedal depresses when braking is performed by the ICC system.

⚠ CAUTION

Never place your foot under the brake pedal, when the brake is operated by the Intelligent Cruise Control system. You may get your foot caught in the pedal.

When a vehicle ahead is detected, the vehicle ahead detection indicator comes on. The ICC system will also display the set speed and selected distance.

Vehicle ahead not detected:

When a vehicle is no longer detected ahead, the ICC system gradually accelerates your vehicle to resume the previously set vehicle speed. The ICC system then maintains the set speed.

When a vehicle is no longer detected the vehicle ahead detection indicator turns off.

If a vehicle ahead appears during acceleration to the set vehicle speed or any time the ICC system is in operation, the system controls the distance to the vehicle.

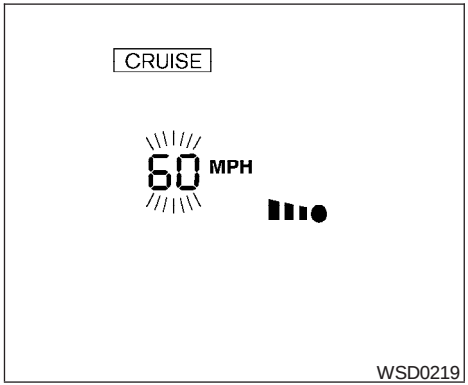

When passing another vehicle, the set speed indicator will flash when the vehicle speed exceeds the set speed. The vehicle detect indicator will turn off when the area ahead of the vehicle is open. When the pedal is released, the vehicle will return to the previously set speed. The CRUISE indicator light will appear on the vehicle information display.

Although your vehicle may be at the set vehicle speed based on ICC system control, depress the accelerator pedal when it is necessary to accelerate your vehicle rapidly.

How to change the set vehicle speed

To cancel the preset speed, use any of these methods:

- Push the CANCEL switch. The set vehicle speed indicator will go out.
- Tap the brake pedal. The set vehicle speed indicator will go out.
- Turn the ON/OFF switch off. Both the ON/OFF switch indicator and set vehicle speed indicator will go out.

To reset at a faster cruising speed, use one of the following methods:

- Depress the accelerator pedal. When the vehicle attains the desired speed, push and release the COAST/SET switch.
- Push and hold the ACCEL/RES switch. The set vehicle speed will increase by approximately 5 MPH (5 km/h for Canada).
- Push, then quickly release the ACCEL/RES switch. Each time you do this, the set speed will increase by approximately 1 MPH (1 km/h for Canada).

To reset at a slower cruising speed, use one of the following methods:

- Lightly tap the brake pedal. When the vehicle attains the desired speed, push the COAST/SET switch and release it.
- Push and hold the COAST/SET switch. The set vehicle speed will decrease by approximately 5 MPH (5 km/h for Canada).
- Push, then quickly release the COAST/SET switch. Each time you do this, the set speed will decrease by approximately 1 MPH (1 km/h for Canada).

To resume the preset speed, push and release the ACCEL/RES switch. The vehicle will resume the last set cruising speed when the vehicle speed is over 25 MPH (40 km/h).

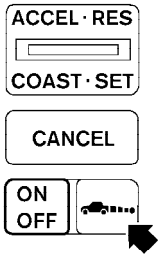

WSD0208

How to change the set distance to the vehicle ahead

The distance to the vehicle ahead can be selected at any time depending on the traffic conditions.

Each time the DISTANCE switch is pressed, the set distance will change to long, medium, short and back to long again in that sequence.

Distance	Display	Approximate distance at 60 MPH (100 km/h) [ft (m)]
Long	60 MPH CRUISE	195 (60)
Middle	60 MPH CRUISE	130 (40)
Short	60 MPH CRUISE	90 (30)

LSD0117

- The distance to the vehicle ahead will change according to the vehicle speed. The higher the vehicle speed, the longer the distance.
- If the engine is stopped, the set distance becomes “long”. (Each time the engine is started, the initial setting becomes “long”.)
- The CRUISE indicator light will appear in the vehicle information display.

Approach warning

If your vehicle comes closer to the vehicle ahead due to rapid deceleration of that vehicle or if another vehicle cuts in, the system warns the driver with the chime and ICC system display. Decelerate by depressing the brake pedal to maintain a safe vehicle distance if:

- The chime sounds.
- The vehicle ahead detection and set distance indicator blink.

The warning chime may not sound in some cases when there is a short distance between vehicles. Some examples are:

- When the vehicles are traveling at the same speed and the distance between vehicles is not changing.
- When the vehicle ahead is traveling faster and the distance between vehicles is increasing.
- When the accelerator pedal is depressed, overriding the system.
- When a vehicle cuts in near your vehicle.

The warning chime will not sound when your vehicle approaches vehicles that are parked or moving slowly.

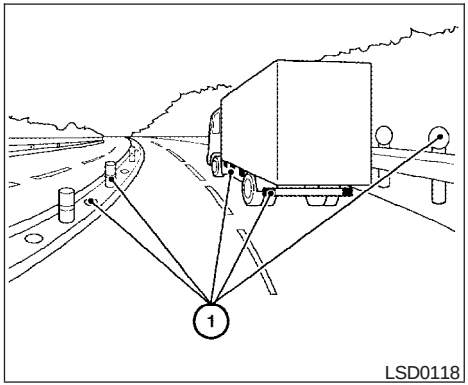

NOTE:

The approach warning chime may sound and the system display may blink when the ICC sensor detects some reflectors ① which are fitted on vehicles in other lanes or on the side of the road. This may cause the ICC system to decelerate or accelerate the vehicle. The ICC sensor may detect these reflectors when the vehicle is driven on winding roads, hilly roads or when entering or exiting a curve. The ICC sensor may also detect reflectors on narrow roads or in road construction zones. In these cases you will have to manually control the proper distance ahead of your vehicle.

Also, the sensor sensitivity can be affected by vehicle operation (steering maneuver or driving position in the lane) or the traffic condition (for example, if a vehicle is being driven with some damage).

Automatic cancellation

A chime sounds under the following conditions and the control is automatically canceled.

- When the vehicle speed falls below approximately 20 MPH (32 km/h)
- When the selector lever is shifted to a position other than D (Drive), 4, 3, 2, or 1, including the manual shift mode
- When the wiper is operated
- When the parking brake is applied
- When the VDC is turned off
- When the VDC operates

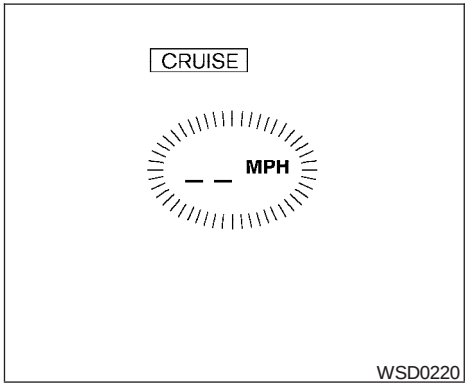

Warning light and display

Condition A

The chime sounds and the Intelligent Cruise Control system is canceled automatically in the conditions described below. The CRUISE indicator light will appear in the vehicle information display. Part of the system display will come on or blink, making it impossible to set.

- When the VDC is turned off
- When the VDC operates
- When a tire slips
- When strong light (sunlight, etc.) is directly shining on the front of the vehicle

Action to take:

When the conditions listed above are no longer present, turn the system off using the Intelligent Cruise Control ON/OFF Switch. Turn the ICC system back on to use the system.

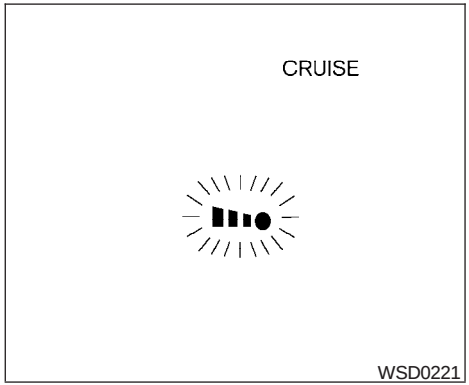

Condition B

When the sensor window is dirty, making it impossible to detect a vehicle ahead, the ICC system is automatically canceled.

The chime sounds and the system warning light (Orange) will come on in the instrument panel and the set distance indicators will blink in the vehicle information display.

Action to take:

If the warning light comes on, park the vehicle in a safe place, turn the engine off. Clean the sensor window with a soft cloth and then perform the settings again.

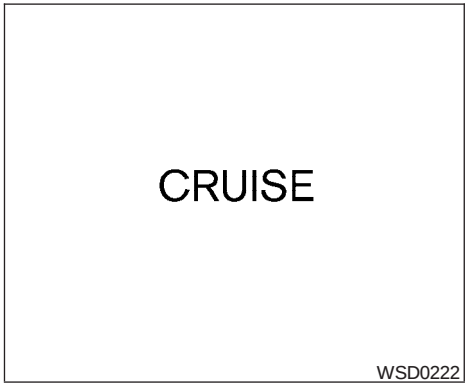

Condition C

When the ICC system is not operating properly, the chime sounds and the orange system warning light will illuminate in the instrument panel.

Action to take:

If the warning light comes on, park the vehicle in a safe place. Turn the engine off and then perform the settings again.

If it is not possible to set the system or the indicator stays on, it may indicate that the system is malfunctioning. Although the vehicle is still driveable under normal conditions, have the vehicle checked at an INFINITI dealer.

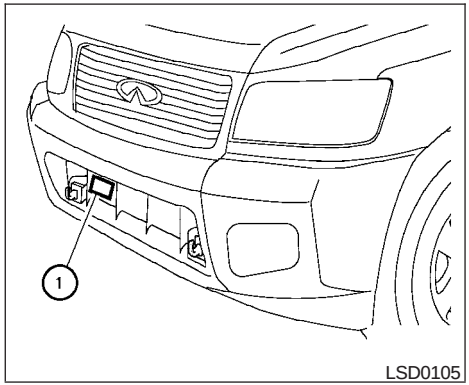

Sensor maintenance

The sensor for the ICC system ① is located below the front bumper.

To keep the ICC system operating properly, be sure to observe the following:

- Always keep the sensor clean. Do not use alcohol, benzine or thinner to clean the sensor. To clean the sensor, wipe softly with a cloth dampened with a diluted mild cleaning agent and rinse with water then wipe with a dry cloth.

- Do not impact the areas around the sensor. Do not touch or remove the screw located on the sensor. Doing so could cause failure or malfunction. If the sensor is deformed due to an accident, contact an INFINITI dealer.
- Do not attach a sticker (including transparent material) or install an accessory near the sensor. This could cause failure or malfunction.

CONVENTIONAL (FIXED SPEED) CRUISE CONTROL MODE

This mode allows driving at a speed between 25 to 89 MPH (40 to 144 km/h) without keeping your foot on the accelerator pedal.

⚠ WARNING

- **In the conventional (fixed speed) cruise control mode, a warning chime does not sound to warn you if you are too close to the vehicle ahead, as neither the presence of the vehicle ahead nor the vehicle-to-vehicle distance is detected.**
- **Pay special attention to the distance between your vehicle and the vehicle ahead of you or a collision could occur.**
- **Always confirm the setting in the Intelligent Cruise Control system display.**
- **Do not use the conventional (fixed speed) cruise control mode when driving under the following conditions:**
  - **When it is not possible to keep the vehicle at a set speed.**
  - **In heavy traffic or in traffic that varies in speed.**
  - **On winding or hilly roads.**
  - **On slippery roads (rain, snow, ice, etc.).**
  - **In very windy areas.**

Doing so could cause a loss of vehicle control and result in an accident.

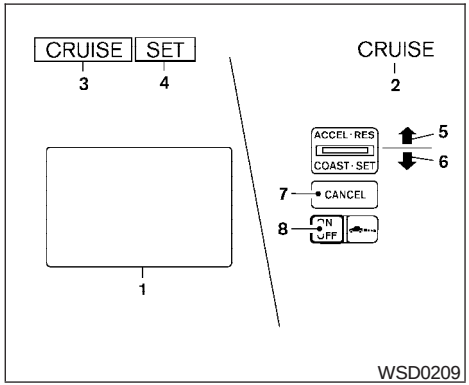

Conventional (fixed speed) cruise control mode display and switch

The display is located within the vehicle information display.

1. Intelligent Cruise Control system display
2. ICC system warning light (Orange)
   The light comes on if there is a malfunction in the ICC system and is illuminated in the instrument panel.
3. CRUISE indicator light
   Indicates that the ON/OFF switch is ON and appears in the vehicle information display.

4. Cruise set switch indicator light
   The light comes on while the vehicle speed is controlled by the conventional (fixed speed) cruise control mode of the ICC system and is in the vehicle information display.
5. ACCELERATE/RESUME switch:
   Resumes set speed or increases speed incrementally.
6. COAST/SET switch:
   Sets the desired cruise speed, reduces speed incrementally.
7. CANCEL switch:
   Deactivates the system without erasing the set speed.
8. ON/OFF switch:
   Master switch to activate the system

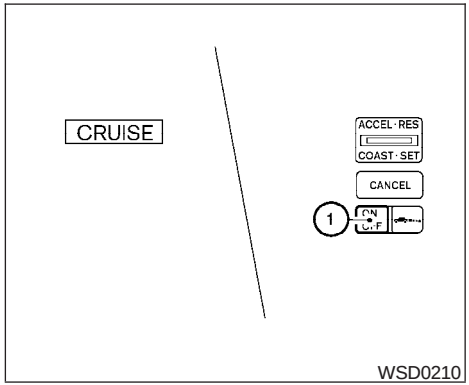

Operating conventional (fixed speed) cruise control mode

To turn on the conventional (fixed speed) cruise control mode, push and hold the ON/OFF switch ① for longer than about 1.5 seconds.

When pushing the ON/OFF switch on, the Intelligent Cruise Control system display and the CRUISE indicator light in the vehicle information display will illuminate. After you hold the ON/OFF switch on for longer than about 1.5 seconds, the Intelligent Cruise Control system display goes out. The CRUISE indicator stays lit. You can now set your desired cruising speed. Pushing the ON/OFF switch again will turn the system completely off.

When the ignition switch is turned off, the system is also automatically turned off. To use the Intelligent Cruise Control again, push the ON/OFF switch (vehicle-to-vehicle distance control mode) or push and hold it (conventional cruise control mode) again to turn it on.

⚠ CAUTION

To avoid accidentally engaging cruise control, make sure to turn the ON/OFF switch off when not using the Intelligent Cruise Control.

To set cruising speed, accelerate your vehicle to the desired speed, push the COAST/SET switch and release it. (The SET indicator light will come on.) Take your foot off the accelerator pedal. Your vehicle will maintain the set speed.

- **To pass another vehicle,** depress the accelerator pedal. When you release the pedal, the vehicle will return to the previously set speed.
- The vehicle may not maintain the set speed when going up or down steep hills. If this happens, drive without the cruise control.

The preset speed can be cancelled using any of these methods:

- Push the CANCEL button. The SET indicator light will go out.
- Tap the brake pedal. The SET indicator light will go out.
- Turn the ON/OFF switch off. Both the CRUISE indicator and SET indicator lights will go out.

To reset at a faster cruising speed, use one of the following three methods:

- Depress the accelerator pedal. When the vehicle attains the desired speed, push and release the COAST/SET switch.
- Push and hold the ACCEL/RES set switch. When the vehicle attains the speed you desire, release the switch.
- Push, then quickly release the ACCEL/RES switch. Each time you do this, the set speed will increase by about 1 MPH (1.6 km/h).

To reset at a slower cruising speed, use one of the following three methods:

- Lightly tap the brake pedal. When the vehicle attains the desired speed, push the COAST/SET switch and release it.
- Push and hold the COAST/SET switch. Release the switch when the vehicle slows down to the desired speed.
- Push, then quickly release the COAST/SET switch. Each time you do this, the set speed will decrease by about 1 MPH (1.6 km/h).

To resume the preset speed, push and release the ACCEL/RES switch. The vehicle will resume the last set cruising speed when the vehicle speed is over 25 MPH (40 km/h).

Automatic cancellation

A chime sounds under the following conditions and the control is automatically canceled.

- When the vehicle slows down more than 8 MPH (13 km/h) below the set speed.
- When the vehicle speed falls below approximately 20 MPH (32 km/h).
- When the selector lever is shifted to a position other than D (Drive).
- When the parking brake is applied.
- When the VDC operates (except ABS, which is functional with ICC system operation).

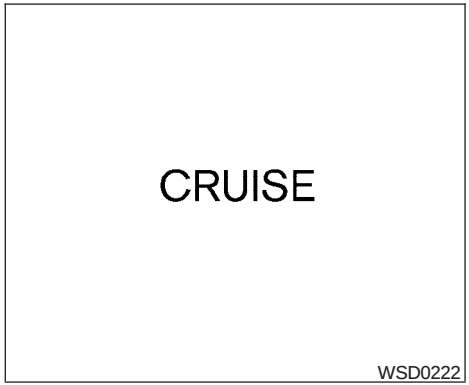

Warning light

When the system is not operating properly, the chime sounds and the orange system warning light will illuminate in the instrument panel.

Action to take:

If the warning light comes on, park the vehicle in a safe place. Turn the engine off restart the engine, resume driving and then perform the setting again.

If it is not possible to set or the indicator stays on, it may indicate that the system is malfunctioning. Although the vehicle is still driveable under normal conditions, have the vehicle checked at an INFINITI dealer.

BRAKE ASSIST (WITH PREVIEW FUNCTION) (for Intelligent Cruise Control System equipped models)

BRAKE ASSIST

When the force applied to the brake pedal exceeds a certain level, the Brake Assist is activated, generating greater braking force than a conventional brake booster even with light pedal force.

⚠ WARNING

The Brake Assist is only an aid to assist braking operation and is not a collision warning or avoidance device. It is the driver's responsibility to stay alert, drive safely and be in control of the vehicle at all times.

PREVIEW FUNCTION

When the Preview Function identifies the need to apply emergency braking by sensing a vehicle ahead in the same lane and the distance and relative speed from it, it applies the brake pre-pressure before the driver depresses the brake pedal and helps improve brake response by reducing pedal free play.

- This system will not operate when the vehicle is moving at approximately 20 MPH (32 km/h) or less.
- The pre-pressure function ceases when the following conditions are met:

a. When the driver depresses the accelerator pedal or the brake pedal.

b. If the driver does not operate the accelerator or brake pedal within approximately 1 second.

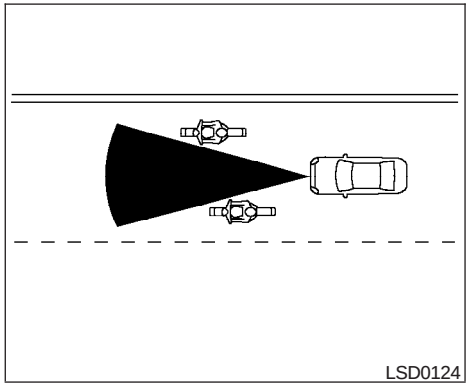

- The sensor will not detect:

a. Pedestrians or objects in the roadway

b. Oncoming vehicles in the same lane

c. Motorcycles or scooters traveling offset in the travel lane as illustrated

⚠ WARNING

- **The Preview Function is only an aid to assist the driver and is not a collision warning or avoidance device. Although the brake operation is controlled by the system, it does not automatically decelerate the vehicle speed. It is the driver's responsibility to stay alert, drive safely and be in control of the vehicle at all times.**
- **As there is a performance limit to the Preview Function, never rely solely on this system. This system does not correct careless, inattentive or absent-minded driving, or overcome poor visibility in rain, fog, or other bad weather. Reduce the vehicle speed by depressing the brake pedal, in order to maintain a safe distance between vehicles.**
- **The system may not detect the vehicle in front of you in certain road or weather conditions. The Preview Function may not operate properly under the following conditions. The vehicle is still driveable under normal conditions and the Brake Assist will operate.**
  - **When rain, snow or dirt adhere to the system sensor.**
  - **When strong light (for example, at sunrise or sunset) is directly shining on the front of the vehicle.**
  - **Winding or hilly roads may cause the sensor to temporarily not detect a vehicle in the same lane or may detect objects or vehicles in other lanes.**
  - **Vehicle position in the lane may cause the sensor to temporarily not detect a vehicle in the same lane or may detect objects or vehicles in other lanes.**
- **When the Preview Function operates, the brake pedal may move slightly and may make a small noise. This is not a system malfunction.**

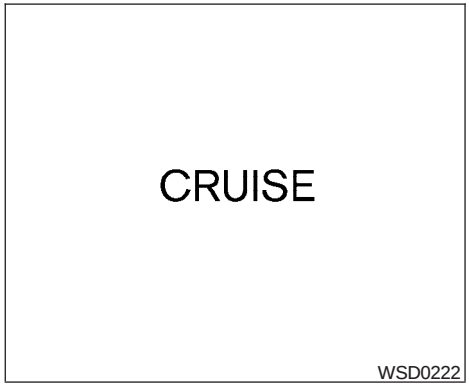

Warning light and display

When the Preview Function is not operating properly, the chime sounds and the orange system warning light will illuminate in the instrument panel.

Action to take

If the warning light comes on, park the vehicle in a safe place. Turn the engine off, restart the engine and resume driving.

If the indicator stays on, it may indicate that the Preview Function is malfunctioning (the brake is operative). Although the Vehicle is still driveable under normal conditions, have the vehicle checked at an INFINITI dealer.

Sensor maintenance

The sensor for the Preview Function, is common with Intelligent Cruise Control and is located below the front bumper.

To keep the Preview Function operating properly, be sure to observe the following:

- Always keep the sensor clean. Wipe with a soft cloth carefully so as not to damage them.
- Do not impact the areas around the sensor. Do not touch or disassemble the screw located on the sensor. Doing so could cause failure or malfunction. If the sensor installation part is deformed due to an accident, contact an INFINITI dealer.
- Do not attach a sticker (including transparent material) or install an accessory near the sensor. This could cause failure or malfunction.

BREAK-IN SCHEDULE

CAUTION

During the first 1,200 miles (2,000 km), follow these recommendations to obtain maximum engine performance and ensure the future reliability and economy of your new vehicle. Failure to follow these recommendations may result in shortened engine life and reduced engine performance.

- Avoid driving for long periods at constant speed, either fast or slow, and do not run the engine over 4,000 rpm.
- Do not accelerate at full throttle in any gear.
- Avoid quick starts.
- Avoid hard braking as much as possible.
- Do not tow a trailer for the first 500 miles (800 km). Your engine, axle or other parts could be damaged.

INCREASING FUEL ECONOMY

- Accelerate slowly and smoothly. Maintain cruising speeds with a constant accelerator position.
- Drive at moderate speeds on the highway. Driving at high speed lowers fuel economy.
- Avoid unnecessary stopping and braking. Maintain a safe distance behind other vehicles.
- Use a proper gear range which suits road conditions. On level roads, shift into high gear as soon as possible.
- Avoid unnecessary engine idling.
- Keep your engine tuned up.
- Follow the recommended periodic maintenance schedule.
- Keep the tires inflated to the correct pressure. Low tire pressure increases tire wear and lowers fuel economy.
- Keep the front wheels in correct alignment. Improper alignment increases tire wear and lowers fuel economy.
- Air conditioner operation lowers fuel economy. Use the air conditioner only when necessary.

4x4 USING FOUR WHEEL DRIVE (4WD)

- When cruising at highway speeds, it is more economical to use the air conditioner and leave the windows closed to reduce drag.
- For vehicles equipped with 4x4, use 4H or 4L position only when necessary. Four-wheel drive operation lowers fuel economy.

WARNING

- **For 4WD equipped vehicles, do not attempt to raise two wheels off the ground and shift the transmission to any drive or reverse position with the engine running. Doing so may result in drivetrain damage or unexpected vehicle movement which could result in serious vehicle damage or personal injury.**
- **Do not attempt to test a 4WD equipped vehicle on a 2-wheel dynamometer (such as the dynamometers used by some states for emissions testing), or similar equipment even if the other two wheels are raised off the ground. Make sure you inform test facility personnel that your vehicle is equipped with 4WD before it is placed on a dynamometer. Using the wrong test equipment may result in drivetrain damage or unexpected vehicle movement which could result in serious vehicle damage or personal injury.**

CAUTION

- **Do not drive the vehicle in the 4H or 4LO position on dry hard surface roads. Driving on dry, hard surfaces in 4H or 4LO may cause unnecessary noise, tire wear and increased fuel consumption.**

  If the 4WD warning light turns on when you are driving on dry hard surface roads:

  - **in the 4H position, shift the 4WD shift switch to 2WD.**
  - **in the 4LO position, stop the vehicle, move the automatic transmission shift selector lever to the N position and shift the 4WD shift switch to 2WD.**
- **If the warning light is still on after the above operation, have your vehicle checked by an INFINITI dealer as soon as possible.**
- **The transfer case may be damaged if you continue driving with the warning light blinking rapidly.**

TRANSFER CASE SHIFTING PROCEDURES

All mode 4WD system provides 4 positions (AUTO, 2WD, 4H and 4LO), so you can select the desired drive mode according to the driving conditions.

2WD or 4WD shift procedure:

4WD Shift Switch Position	Wheels Driven	Indicator Light		Use Conditions	4WD Shift Procedure
		4WD shift	Transfer 4LO position		
AUTO	Rear wheels or 4 wheels			For driving on paved or slippery roads	Move the 4WD switch. 2WD <—> AUTO <—> 4H 4WD shift indicator light will indicate transfer shift position engaged. IT IS NOT NECESSARY TO MOVE THE AUTOMATIC TRANSMISSION SELECT LEVER TO THE N POSITION IN THIS OPERATION. PERFORM THIS OPERATION WHEN DRIVING STRAIGHT.
2WD	Rear wheels			For driving on dry, paved roads (Economy drive) or state dynamometer I/M testing	
4H	4 wheels			For driving on rocky, sandy or snow-covered roads	
	Neutral		*1 May blink	Neutral disengages the automatic transmission mechanical parking lock, which will allow the vehicle to roll. Do not leave the transfer shift position in Neutral.*2	1. Stop the vehicle. 2. Move the automatic transmission selector lever to the N position. 3. Push the 4WD shift switch and move it to 4LO or 4H with the brake pedal depressed. YOU CANNOT MOVE THE TRANSFER 4WD SHIFT SWITCH BETWEEN 4H AND 4LO (OR 4LO TO 4H) UNLESS YOU HAVE FIRST STOPPED THE VEHICLE, DEPRESSED THE BRAKE PEDAL AND MOVED THE AUTOMATIC TRANSMISSION SHIFT LEVER TO NEUTRAL. *3
4LO	4 wheels		Illuminated	For use when maximum power and traction is required (for example: on steep grades or rocky, sandy, muddy roads)	

*1: The transfer 4LO position indicator light may blink. Stop the vehicle. Be sure to shift the 4WD shift switch after the automatic transmission lever has been shifted to the N position. If the indicator light keeps blinking after the 4WD shift procedure in the previous page, drive slowly without abrupt maneuvers for a while. Then the light will turn on or off.

▪ Avoid making a turn or abrupt starts while shifting to 4LO. Otherwise gears may grind, damaging the drive system.

*2: While changing in and out of 4LO, the ignition key must be ON and the vehicle's engine must be running for a shift to take place and for the indicator lights (4WD shift and 4LO position indicator) to be operable. Otherwise, the shift will not take place and no indicator lights will be on or flashing.

*3: Make sure the transfer 4LO position indicator light turns on when you shift the 4WD shift switch to 4LO. The VDC OFF indicator light will also turn on when 4LO is selected. See "Vehicle Dynamic Control (VDC) system" later in this section.

The transfer case 4WD shift switch is used to select either 2WD or 4WD depending on the driving conditions. There are four types of drive modes available, AUTO, 2WD, 4H and 4LO.

The 4WD shift switch electronically controls the transfer case operation. Rotate the switch to move between each mode, 2WD, AUTO, 4H and 4LO.

You must push the switch in to select 4LO, and the vehicle MUST be stationary and the automatic transmission selector lever in the N position when changing into or out of 4LO.

⚠ WARNING

When parking, apply the parking brake before stopping the engine and make sure that the 4WD shift indicator light is on and the ATP warning light goes off. Otherwise, the vehicle could unexpectedly move even if the automatic transmission is in the P position.

⚠ CAUTION

- **Never shift the 4WD shift switch between 4LO and 4H while driving.**
- **The 4H position provides greater traction. Avoid excessive speed, as it will cause increased fuel consumption and higher oil temperatures, and could damage drivetrain components. Speeds over 62.5 MPH (100 km/h) in 4H is not recommended.**
- **The 4LO position provides maximum power and traction. Avoid raising vehicle speed excessively, as the maximum speed is approximately 31 MPH (50 km/h).**
- **When driving straight, shift the 4WD shift switch to the 2WD, AUTO or 4H position. Do not move the 4WD shift switch when making a turn or reversing.**
- **Do not shift the 4WD shift switch (between 2WD, AUTO and 4H) while driving on steep downhill grades. Use the engine brake and low automatic transmission gears (D1 or D2) for engine braking.**
- **Do not operate the 4WD shift switch (between 2WD, AUTO and 4H) with the rear wheels spinning.**
- **Do not drive on dry hard surface roads in the 4H or 4LO position. Driving on dry hard surfaces in 4H or 4LO may cause unnecessary noise and tire wear. INFINITI recommends driving in the 2WD or AUTO position under these conditions.**
- **The 4WD transfer case may not be shifted between 4H and 4LO at low ambient temperatures and the transfer 4LO position indicator light may blink even when the 4WD shift switch is shifted. After driving for a while you can change the 4WD transfer case between 4H and 4LO.**

When driving on rough roads,

- Set the 4WD shift switch to AUTO, 4H or 4LO.
- Drive carefully according to the road surface conditions.

When the vehicle is stuck,

- Set the 4WD shift switch to 4H or 4LO.
- If it is difficult to free the vehicle, repeat forward and backward movement to increase the movement.
- If the vehicle is stuck deep in mud, place stones or wooden blocks under the tires. Then try the recovery procedures above. Tire chains may be effective.

⚠ CAUTION

- **Do not spin the tires excessively. Tires will sink deep into the mud, making it difficult to free the vehicle.**
- **Avoid shifting gears with the engine running at high speeds as this may cause malfunction.**

4WD shift switch operations

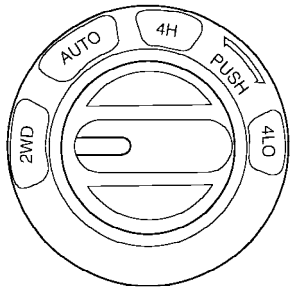

LSD0144

- Shift the 4WD shift switch to either the 2WD, AUTO, 4H or 4LO position, depending on driving conditions.
- With the switch set to the AUTO position, distribution of torque to the front and rear wheels changes automatically, depending on road conditions encountered [ratio; 0 : 100 (2WD) → 50 : 50 (4WD)]. This results in improved driving stability.
- **If the 4WD shift switch is operated while making a turn, accelerating or decelerating or if the key switch is turned off while in the AUTO, 4H or 4LO, you may feel a jolt. This is not abnormal.**
- **When the vehicle is stopped after making a turn, you may feel a slight jolt after the selector lever is shifted to N or P. This occurs because the transfer clutch is released and not because of a malfunction.**

⚠ CAUTION

- **When driving straight, shift the 4WD shift switch to the 2WD, AUTO or 4H position. Do not move the 4WD shift switch when making a turn or reversing.**
- **Do not shift the 4WD shift switch while driving on steep downhill grades. Use the engine brake and low automatic transmission gears (D1 or D2) for engine braking.**
- **Do not operate the 4WD shift switch with the rear wheels spinning.**
- **Before placing the 4WD shift switch in the 4H position from 2WD or AUTO, ensure the vehicle speed is less than 62.5 MPH (100 km/h). Failure to do so can damage the 4WD system.**
- **Never shift the 4WD shift switch between 4LO and 4H while driving.**

- **Engine idling speed is high while warming up the engine. Be especially careful when starting or driving on slippery surfaces with the 4WD shift switch set in AUTO.**

4WD shift indicator light

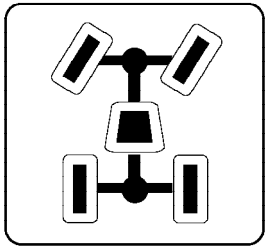

The 4WD shift indicator light is located in the vehicle information display.

The light should turn off within 1 second after turning the ignition switch to the ON position.

While the engine is running, the 4WD shift indicator light will illuminate the position selected by the 4WD shift switch.

- **The 4WD shift indicator light may blink while shifting from one drive mode to the other. When the shifting is completed, the 4WD shift indicator light will come on. If the indicator light does not come on immediately, make sure the area around the vehicle is safe, and drive the vehicle straight, accelerate or decelerate or move the vehicle in reverse, then shift the 4WD shift switch.**
- If the 4WD warning light comes on, the 4WD indicator light goes out.

⚠ CAUTION

- **When the 4WD shift switch is turned to the AUTO position at low ambient temperatures, the 4WD shift indicator light may show 4H. If this happens, all four wheels are driven as torque distribution is in the 4H position. Be careful as the vehicle may become difficult to turn. When the vehicle is driven, the 4WD shift indicator light should change to AUTO.**
- **If the 4WD shift indicator light indication changes to 2WD when the 4WD shift switch is shifted to the AUTO or 4H position at low ambient temperatures, the 2WD mode may be being engaged due to malfunctioning drive system. If the indicator does not return to normal and the 4WD warning light comes on, have the system checked by the nearest INFINITI dealer.**

4WD warning light

Warning light	Comes on or blinks when:
4WD Comes on	There is a malfunction in the 4–wheel drive system
4WD Blinks rapidly	The transfer case oil temperature is abnormally high
4WD Blinks slowly	The difference in wheel rotation is large

The 4WD warning light is located in the meter.

The 4WD warning light comes on when the key switch is turned to ON. It turns off soon after the engine is started.

If any malfunction occurs in the 4WD system when the key switch is ON, the warning light will either remain illuminated or blink.

If the 4WD warning light comes on, the 4WD shift indicator light goes out.

High-temperature transfer case oil makes the warning light blink rapidly (about twice per second). If the warning light blinks rapidly during operation, stop the vehicle in a safe place immediately. Then if the light goes off after a while, you can continue driving.

A large difference between the diameters of front and rear wheels will make the warning light blink slowly (about once per two seconds). Change the 4WD shift switch into 2WD and do not drive fast.

⚠ CAUTION

- **If the warning light comes on or blinks slowly during operation or rapidly after stopping the vehicle for a while, have your vehicle checked by an INFINITI dealer as soon as possible.**
- **Shifting between 4H and 4LO is not recommended when the 4WD warning light turns on.**
- **When the warning light comes on, the 2WD mode may be engaged even if the 4WD shift switch is in AUTO or 4H. Be especially careful when driving. If corresponding parts are malfunctioning, the 4WD mode will not be engaged even if the 4WD shift switch is shifted.**
- **Do not drive the vehicle in the 4H or 4LO position on dry hard surface roads. Driving on dry, hard surfaces in 4H or 4LO may cause unnecessary noise, tire wear and increased fuel consumption.**

  If the 4WD warning light turns on when you are driving on dry hard surface roads:

  - **in the AUTO or 4H position, shift the 4WD shift switch to 2WD.**
  - **in the 4LO position, stop the vehicle, move the automatic transmission shift selector lever to the N position with the brake pedal depressed, and shift the 4WD shift switch to 2WD.**
- **If the warning light is still on after the above operation, have your vehicle checked by an INFINITI dealer as soon as possible.**
- **The transfer case may be damaged if you continue driving with the warning light blinking rapidly.**

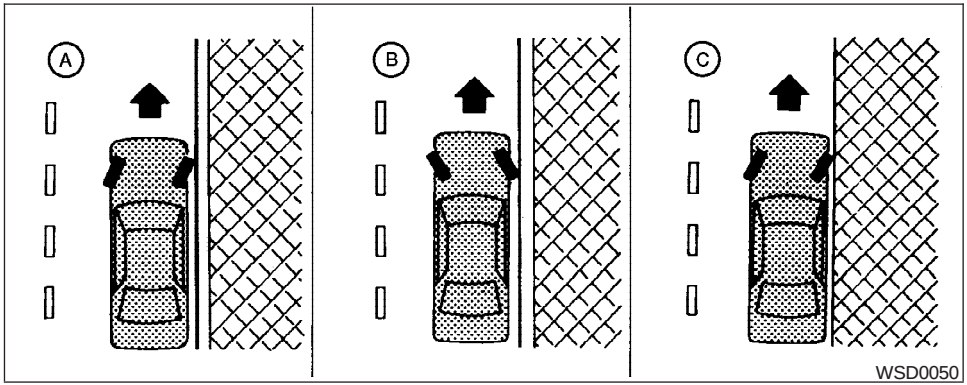

WARNING

- **Do not stop or park the vehicle over flammable materials such as dry grass, waste paper or rags. They may ignite and cause a fire.**
- **Safe parking procedures require that both the parking brake be set and the transmission placed into P (Park). Failure to do so could cause the vehicle to move unexpectedly or roll away and result in an accident. Make sure the shift lever has been pushed as far forward as it can go and cannot be moved without depressing the foot brake pedal.**
- **Never leave the engine running while the vehicle is unattended.**
- **Do not leave children unattended inside the vehicle. They could unknowingly activate switches or controls. Unattended children could become involved in serious accidents.**

1. Firmly apply the parking brake.
2. Move the shift selector lever to the P (Park) position.
3. To help prevent the vehicle from rolling into traffic when parked on an incline, it is a good practice to turn the wheels as illustrated.

- HEADED DOWNHILL WITH CURB: Ⓐ

  Turn the wheels into the curb and move the vehicle forward until the curb side wheel gently touches the curb.

- HEADED UPHILL WITH CURB: Ⓑ

  Turn the wheels away from the curb and move the vehicle back until the curb side wheel gently touches the curb.

- HEADED UPHILL OR DOWNHILL, NO CURB: Ⓒ

  Turn the wheels toward the side of the road so the vehicle will move away from the center of the road if it moves.

4. Turn the ignition key to the LOCK position and remove the key.

POWER STEERING

The power assisted steering uses a hydraulic pump, driven by the engine, to assist steering.

If the engine stops or the drive belt breaks, you will still have control of the vehicle. However, much greater steering effort is needed, especially in sharp turns and at low speeds.

⚠ WARNING

If the engine is not running or is turned off while driving, the power assist for the steering will not work. Steering will be harder to operate.

BRAKE SYSTEM

The brake system has two separate hydraulic circuits. If one circuit malfunctions, you will still have braking at two wheels.

BRAKE PRECAUTIONS

Vacuum assisted brakes

The brake booster aids braking by using engine vacuum. If the engine stops, you can stop the vehicle by depressing the brake pedal. However, greater foot pressure on the brake pedal will be required to stop the vehicle and stopping distance will be longer.

Using the brakes

Avoid resting your foot on the brake pedal while driving. This will overheat the brakes, wear out the brake pads faster, and reduce gas mileage.

To help reduce brake wear and to prevent the brakes from overheating, reduce speed and downshift to a lower gear before going down a slope or long grade. Overheated brakes may reduce braking performance and could result in loss of vehicle control.

⚠ WARNING

- **While driving on a slippery surface, be careful when braking, accelerating or downshifting. Abrupt braking or accelerating could cause the wheels to skid and result in an accident.**
- **If the engine is not running or is turned off while driving, the power assist for the brakes will not work. Braking will be harder.**

Wet brakes

When the vehicle is washed or driven through water, the brakes may get wet. As a result, your braking distance will be longer and the vehicle may pull to one side during braking.

To dry the brakes, drive the vehicle at a safe speed while lightly pressing the brake pedal to heat up the brakes. Do this until the brakes return to normal. Avoid driving the vehicle at high speeds until the brakes function correctly.

Parking brake break-in

Break-in the parking brake shoes whenever the stopping effect of the parking brake is weakened or whenever the parking brake shoes and/or drum/rotors are replaced, in order to assure the best brake performance.

This procedure is described in the vehicle service manual and can be performed by an INFINITI dealer.

ANTI-LOCK BRAKING SYSTEM (ABS)

⚠ WARNING

- **The Anti-lock Braking System (ABS) is a sophisticated device, but it cannot prevent accidents resulting from careless or dangerous driving techniques. It can help maintain vehicle control during braking on slippery surfaces. Remember that stopping distances on slippery surfaces will be longer than on normal surfaces even with ABS. Stopping distances may also be longer on rough, gravel or snow covered roads, or if you are using tire chains. Always maintain a safe distance from the vehicle in front of you. Ultimately, the driver is responsible for safety.**
- **Tire type and condition may also affect braking effectiveness.**
  - **When replacing tires, install the specified size of tires on all four wheels.**
  - **When installing a spare tire, make sure that it is the proper size and type as specified on the Tire and Loading Information label. See "Tire and Loading Information label" in the "Technical and consumer information" section of this manual.**
  - **For detailed information, see "Wheels and tires" in the "Maintenance and do-it-yourself" section of this manual.**

The Anti-lock Braking System (ABS) controls the brakes so the wheels do not lock during hard braking or when braking on slippery surfaces. The system detects the rotation speed at each wheel and varies the brake fluid pressure to prevent each wheel from locking and sliding. By preventing each wheel from locking, the system helps the driver maintain steering control and helps to minimize swerving and spinning on slippery surfaces.

Using the system

Depress the brake pedal and hold it down. Depress the brake pedal with firm steady pressure, but do not pump the brakes. The ABS will operate to prevent the wheels from locking up. Steer the vehicle to avoid obstacles.

⚠ WARNING

Do not pump the brake pedal. Doing so may result in increased stopping distances.

Normal operation

The ABS operates at speeds above 3 - 6 MPH (5 - 10 km/h).

When the ABS senses that one or more wheels are close to locking up, the system electronically controls the pressure applied to each brake.

This action is similar to pumping the brakes very quickly. You may feel a pulsation in the brake pedal and hear a noise from under the hood or feel a vibration from the actuator when it is operating. This is normal and indicates that the ABS is operating properly. However, the pulsation may indicate that road conditions are hazardous and extra care is required while driving.

Self-test feature

The ABS includes electronic sensors, electric pumps, hydraulic solenoids and a computer. The computer has a built-in diagnostic feature that tests the system each time you start the engine and move the vehicle at a low speed in forward or reverse. When the self-test occurs, you may hear a "clunk" noise and/or feel a pulsation in the brake

pedal. This is normal and does not indicate a malfunction. If the computer senses a malfunction, it switches the ABS off and illuminates the ABS warning light on the instrument panel. The brake system then operates normally, but without anti-lock assistance.

If the ABS warning light illuminates during the self-test or while driving, have the vehicle checked by an INFINITI dealer.

When accelerating or driving on slippery surfaces, the tires may spin or slide. With the Vehicle Dynamic Control (VDC) system, sensors detect these movements and control the braking and engine output to help improve vehicle stability.

- When the Vehicle Dynamic Control (VDC) system is operating, the slip indicator in the instrument panel blinks.
- If the slip indicator blinks, the road conditions are slippery. Be sure to adjust your speed and driving to these conditions. See “Slip indicator light”, and “Vehicle Dynamic Control (VDC) off indicator light” in the “Instruments and controls” section.
- Indicator light
  - If a malfunction occurs in the system, the **SLIP** and VDC OFF indicator lights come on in the instrument panel.
  - If the 4WD transfer case is shifted into 4LO the VDC OFF indicator light will come on and the VDC system will be turned off. See “Transfer case shifting procedures” earlier in this section.
  - As long as these indicator lights are on, the traction control function is canceled.

If the vehicle is operated with the Vehicle Dynamic Control system off using the VDC OFF switch, most VDC functions will be turned off. The VDC system will still try to transfer power from a slipping drive wheel to one with more traction when the VDC system switch is OFF. The **SLIP** indicator will flash if wheel spin is detected. The ABS will still operate with the VDC system off.

When the VDC system is operating, you may feel a pulsation in the brake pedal and hear a noise or vibration from under the hood. This is normal and indicates that the VDC system is working properly.

The computer has a built in diagnostic feature that tests the system each time you start the engine and move the vehicle forward or in reverse at a slow speed. When the self-test occurs, you may hear a clunk noise and/or feel a pulsation in the brake pedal. This is normal and is not an indication of a malfunction.

⚠ WARNING

- **The Vehicle Dynamic Control system is designed to help improve driving stability but does not prevent accidents due to abrupt steering operation at high speeds or by careless or dangerous driving techniques. Reduce vehicle speed and be especially careful when driving and cornering on slippery surfaces and always drive carefully.**
- **If brake related parts such as brake pads, rotors and calipers are not standard equipment or are extremely deteriorated, the Vehicle Dynamic Control system may not operate properly and the Vehicle Dynamic Control off indicator light may come on.**
- **Do not modify the vehicle's suspension. If suspension parts such as shock absorbers, struts, springs, stabilizer bars, bushings and wheels are not INFINITI approved for your vehicle or are extremely deteriorated the Vehicle Dynamic Control system may not operate properly. This could adversely affect vehicle handling performance, and the VDC OFF indicator light may come on.**
- **When driving on extremely inclined surfaces such as higher banked corners, the Vehicle Dynamic Control system may not operate properly and the VDC OFF indicator light may come on. Do not drive on these types of roads.**
- **When driving on an unstable surface such as a turntable, ferry, elevator or ramp, the Vehicle Dynamic Control off indicator light may illuminate. This is not a malfunction. Restart the engine after driving onto a stable surface.**
- **If wheels or tires other than the recommended ones are used, the Vehicle Dynamic Control system may not operate properly and the Vehicle Dynamic Control off indicator light may come on.**
- **The Vehicle Dynamic Control system is not a substitute for winter tires or tire chains on a snow covered road.**

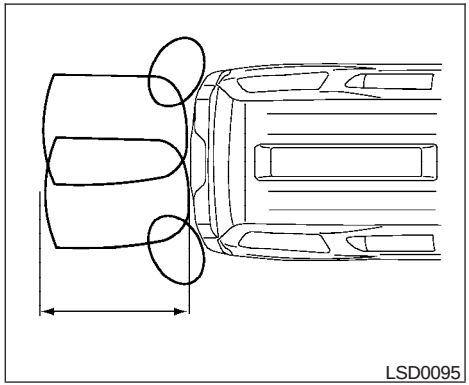

⚠ WARNING

- **Always turn and look back before backing up. The RSS is not a substitute for proper backing procedures.**
- **Read and understand the limitations of the rear sonar system as contained in this section. Inclement weather may affect the function of the RSS; this may include reduced performance or a false activation.**
- **This system is not designed to prevent contact with small or moving objects.**

- **The system is designed as an aid to the driver in detecting large stationary objects to help avoid damaging the vehicle. The system will not detect small objects below the bumper, and may not detect objects close to the bumper or on the ground.**
- **If your vehicle sustains damage to the rear bumper fascia, leaving it misaligned or bent, the sensing zone may be altered causing inaccurate measurement of obstacles or false alarms.**

The Rear Sonar System (RSS) sounds a tone to warn the driver of obstacles near the rear bumper when the shift selector lever is in R (Reverse). The system may not detect objects at speeds above 3 mph (5 km/h) and may not detect certain angular or moving objects.

The RSS detects obstacles up to 6 ft (1.8 m) from the rear bumper with a decreased coverage area at the outer corners of the bumper, (refer to the illustration for approximate zone coverage areas). As you move closer to the obstacle, the rate of the tone increases. When the obstacle is less than 10 in (25.0 cm) away, the tone will sound continuously. If the RSS detects a stationary or receding object further than 10 in. (25.0 cm) from the side of the vehicle, the tone will sound for only 3 seconds. Once the system detects an object approaching, the tone will sound again.

The RSS automatically turns on when the shift selector lever is placed in R (Reverse) and the ignition is ON. The RSS OFF switch on the instrument panel allows the driver to turn the RSS on and off. To turn the RSS off, the ignition must be ON. An indicator light on the switch will illuminate when the system is turned off. If the indicator light illuminates when the RSS is not turned off, it may indicate a malfunction in the RSS.

Keep the RSS sensors (located on the rear bumper fascia) free from snow, ice and large accumulations of dirt (do not clean the sensors with sharp objects). If the sensors are covered, it will affect the accuracy of the RSS.

FRONT SONAR SYSTEM (if so equipped)

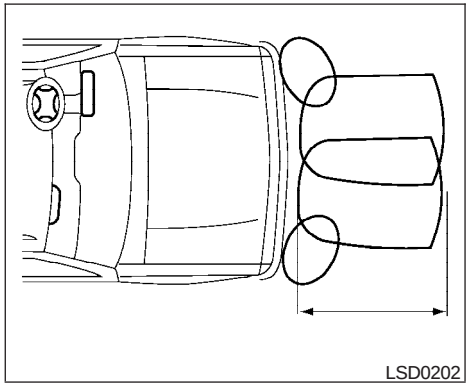

⚠ WARNING

- **Always look around before proceeding. The FSS is not a substitute for proper driving procedures.**
- **Read and understand the limitations of the front sonar system as contained in this section. Inclement weather may affect the function of the FSS, this may include reduced performance or a false activation.**
- **This system is not designed to prevent contact with small or moving objects.**

- **The system is designed as an aid to the driver in detecting large stationary objects to help avoid damaging the vehicle. The system will not detect small objects below the bumper, and may not detect objects close to the bumper or on the ground.**
- **If your vehicle sustains damage to the front bumper fascia, leaving it misaligned or bent, the sensing zone may be altered causing inaccurate measurement of obstacles or false alarms.**

The Front Sonar System (FSS) sounds a tone to warn the driver of obstacles near the front bumper when the shift selector is in a forward gear. The system may not detect objects at speeds above 3 mph (5 km/h) and may not detect certain angular or moving objects.

The FSS detects obstacles up to 6 ft (1.8 m) from the front bumper with a decreased coverage area at the outer corners of the bumper, (refer to the illustration for approximate zone coverage areas). As you move closer to the obstacle, the rate of the tone increases. When the obstacle is less than 10 in (25.0 cm) away, the tone will sound continuously. If the FSS detects a stationary or receding object further than 10 in (25.0 cm) from the side of the vehicle, the tone will sound for only 3 seconds. Once the system detects an object approaching, the tone will sound again.

The FSS automatically turns on when the shift selector lever is placed in a forward gear and the ignition is ON. The front and rear sonar system off switch on the instrument panel allows the driver to turn the FSS on and off. To turn the FSS off, the ignition must be ON, and the shift selector lever in D (Drive). An indicator light on the switch will illuminate when the system is turned off. If the indicator light illuminates when the FSS is not turned off, it may indicate a malfunction in the FSS.

Keep the FSS sensors (located on the front bumper fascia) free from snow, ice and large accumulations of dirt (do not clean the sensors with sharp objects). If the sensors are covered, it will affect the accuracy of the FSS.

FREEING A FROZEN DOOR LOCK

To prevent a door lock from freezing, apply deicer through the key hole. If the lock becomes frozen, heat the key before inserting it into the key hole or use the remote keyless entry keyfob (if so equipped).

ANTI-FREEZE

In the winter when it is anticipated that the temperature will drop below 32°F (0°C), check the anti-freeze to assure proper winter protection. For details, see “Engine cooling system” in the “Maintenance and do-it-yourself” section of this manual.

BATTERY

If the battery is not fully charged during extremely cold weather conditions, the battery fluid may freeze and damage the battery. To maintain maximum efficiency, the battery should be checked regularly. For details, see “Battery” in the “Maintenance and do-it-yourself” section of this manual.

DRAINING OF COOLANT WATER

If the vehicle is to be left outside without anti-freeze, drain the cooling system, including the engine block. Refill before operating the vehicle. For details, see “Changing engine coolant” in the “Maintenance and do-it-yourself” section of this manual.

TIRE EQUIPMENT

1. SUMMER tires have a tread designed to provide superior performance on dry pavement. However, the performance of these tires will be substantially reduced in snowy and icy conditions. If you operate your vehicle on snowy or icy roads, INFINITI recommends the use of MUD & SNOW or ALL SEASON TIRES on all four wheels. Please consult an INFINITI dealer for the tire type, size, speed rating and availability information.
2. For additional traction on icy roads, studded tires may be used. However, some U.S. states and Canadian provinces prohibit their use. Check local, state and provincial laws before installing studded tires.

Skid and traction capabilities of studded snow tires on wet or dry surfaces may be poorer than that of non-studded snow tires.

3. Tire chains may be used. For details see “Tire chains” in the “Maintenance and do-it-yourself” section of this manual.

SPECIAL WINTER EQUIPMENT

It is recommended that the following items be carried in the vehicle during winter:

- A scraper and stiff-bristled brush to remove ice and snow from the windows and wiper blades.
- A sturdy, flat board to be placed under the jack to give it firm support.
- A shovel to dig the vehicle out of snowdrifts.
- Extra window washer fluid to refill the reservoir tank.

DRIVING ON SNOW OR ICE

⚠ WARNING

- **Wet ice (32°F, 0°C and freezing rain), very cold snow or ice can be slick and very hard to drive on. The vehicle will have much less traction or “grip” under these conditions. Try to avoid driving on wet ice until the road is salted or sanded.**
- **Whatever the condition, drive with caution. Accelerate and slow down with care. If accelerating or downshifting too fast, the drive wheels will lose even more traction.**
- **Allow more stopping distance under these conditions. Braking should be started sooner than on dry pavement.**
- **Allow greater following distances on slippery roads.**
- **Watch for slippery spots (glare ice). These may appear on an otherwise clear road in shaded areas. If a patch of ice is seen ahead, brake before reaching it. Try not to brake while on the ice, and avoid any sudden steering maneuvers.**
- **Do not use the cruise control on slippery roads.**
- **Snow can trap dangerous exhaust gases under your vehicle. Keep snow clear of the exhaust pipe and from around your vehicle.**

ENGINE BLOCK HEATER (if so equipped)

Engine block heaters are available through INFINITI dealers to assist in cold temperature starting. The engine block heater should be used when the outside temperature is 20° F (-7° C) or lower.

To use the engine block heater:

1. Turn the engine off.
2. Open the hood and unwrap the engine block heater cord.
3. Plug the engine block heater cord into a grounded 3-wire, 3-pronged extension cord.
4. Plug the extension cord into a Ground Fault Interrupt (GFI) protected, grounded 110-volt AC (VAC) outlet.
5. The engine block heater must be plugged in for at least 2 - 4 hours, depending on outside temperatures, to properly warm the engine coolant. Use an appropriate timer to turn the engine block heater on.
6. Before starting the engine, unplug and properly store the cord to keep it away from moving parts.

⚠ WARNING

- **Do not use your engine block heater with an ungrounded electrical system or a 2-pronged adapter. You can be seriously injured by an electrical shock if you use an ungrounded connection.**
- **Disconnect and properly store the engine block heater cord before starting the engine. Damage to the cord could result in an electrical shock and can cause serious injury.**
- **Use a heavy-duty 3-wire, 3-pronged extension cord rated for at least 10 A. Plug the extension cord into a Ground Fault Interrupt (GFI) protected, grounded 110-VAC outlet. Failure to use the proper extension cord or a grounded outlet can result in a fire or electrical shock and cause serious personal injury.**

6 In case of emergency

Flat tire 6-2
Tire Pressure Monitoring System (TPMS). 6-2
Changing a flat tire 6-2
Jump starting 6-8
Push starting. 6-10
If your vehicle overheats 6-10
Towing your vehicle 6-11
Towing recommended by INFINITI 6-11
Vehicle recovery (freeing a stuck vehicle) 6-13

TIRE PRESSURE MONITORING SYSTEM (TPMS)

This vehicle is equipped with the Tire Pressure Monitoring System (TPMS). It monitors tire pressure of all tires except the spare. When the low tire pressure warning light is lit, one or more of your tires is significantly under-inflated. If equipped, the system also displays pressure of all tires (except the spare tire) on the display screen by sending a signal from a sensor that is installed in each wheel. If the vehicle is being driven with low tire pressure, the TPMS will activate and warn you of it by the low tire pressure warning light. This system will activate only when the vehicle is driven at speeds above 16 MPH (26 km/h). For more details, refer to "Warning/indicator lights and audible reminders" in the "Instruments and controls" section, "Tire pressure information" in the "Monitor, climate, audio, phone and voice recognition systems" section and "Tire Pressure Monitoring System (TPMS)" in the "Starting and driving" section.

⚠ WARNING

- **If the low tire pressure warning light illuminates while driving, avoid sudden steering maneuvers or abrupt braking, reduce vehicle speed, pull off the road to a safe location and stop the vehicle as soon as possible. Driving with under-inflated tires may permanently damage the tires and increase the likelihood of tire failure. Serious vehicle damage could occur and may lead to an accident and could result in serious personal injury. Check the tire pressure for all four tires. Adjust the tire pressure to the recommended COLD tire pressure shown on the Tire and Loading Information label to turn the low tire pressure warning light OFF. If you have a flat tire, replace it with a spare tire as soon as possible.**
- **When a spare tire is mounted or a wheel is replaced, tire pressure will not be indicated, the TPMS will not function and the low tire pressure warning light will flash for approximately 1 minute. The light will remain on after 1 minute. Contact your INFINITI dealer as soon as possible for tire replacement and/or system resetting.**
- **Do not inject any tire liquid or aerosol tire sealant into the tires, as this may cause a malfunction of the tire pressure sensors.**

CHANGING A FLAT TIRE

If you have a flat tire, follow the instructions below.

Stopping the vehicle

1. Safely move the vehicle off the road and away from traffic.
2. Turn on the hazard warning flashers.
3. Park on a level surface and apply the parking brake. Shift the transmission into P (Park).
4. Turn off the engine.
5. Raise the hood to warn other traffic and to signal professional road assistance personnel that you need assistance.
6. Have all passengers get out of the vehicle and stand in a safe place, away from traffic and clear of the vehicle.

⚠ WARNING

- **Make sure the parking brake is securely applied and the automatic transmission is shifted into P (Park).**
- **Never change tires when the vehicle is on a slope, ice or slippery areas. This is hazardous.**
- **Never change tires if oncoming traffic is close to your vehicle. Wait for professional road assistance.**
- **When a spare tire is mounted or a wheel is replaced, tire pressure will not be indicated and the low tire pressure warning system will not function. Contact your INFINITI dealer as soon as possible for tire replacement and/or system resetting.**

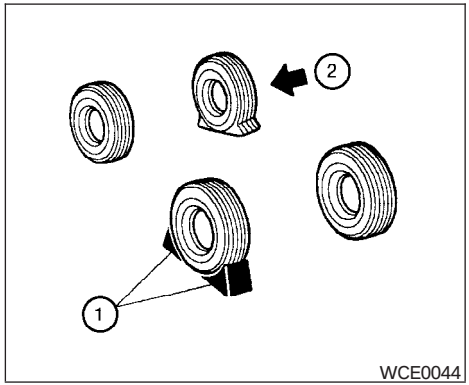

Blocking wheels

Place suitable blocks ① at both the front and back of the wheel diagonally opposite the flat tire ② to prevent the vehicle from moving when it is jacked up.

⚠ WARNING

Be sure to block the wheel as the vehicle may move and result in personal injury.

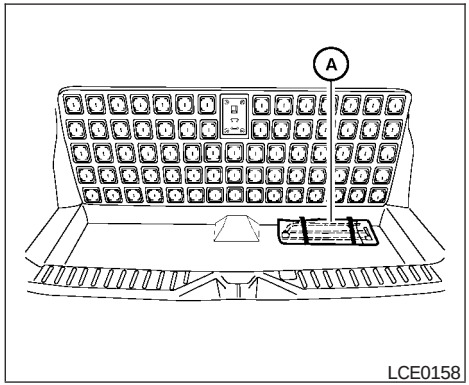

Getting the spare tire and tools

1. Lift the luggage board in the cargo area and remove the jack tool kit Ⓐ from the storage area, see “Cargo area storage bin” in the “Instruments and controls” section.
2. Remove the cargo area storage bin cover, see “Cargo area storage bin” in the “Instruments and controls” section.

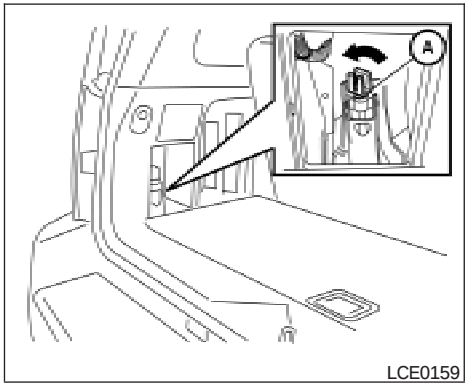

3. Unscrew and remove the jack Ⓐ.

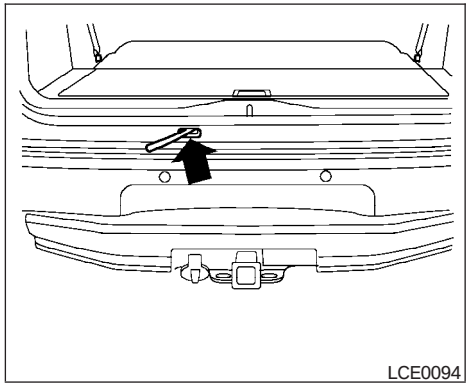

4. Assemble the two pieces of the jack rod. Find the oval-shaped opening above the middle of the license plate. Pass the T-shaped end of the jack rod through the opening and direct it toward the spare tire winch, located directly above the spare tire.

⚠CAUTION

Do not insert the jack rod straight as it is designed to be inserted at an angle as shown.

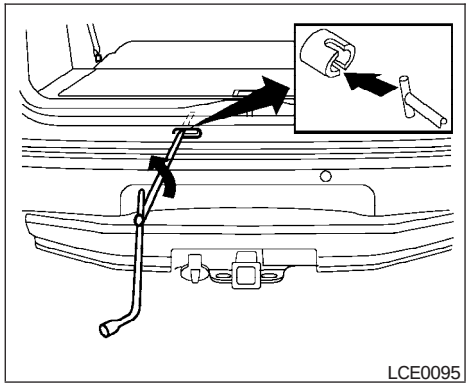

5. Fit the square end of the jack rod into the square hole of the wheel nut wrench to form a handle.
6. Seat the T-shaped end of the jack rod into the T-shaped opening of the tire winch. Apply pressure to keep the jack rod engaged in the spare tire winch and turn the jack rod counterclockwise to lower the spare tire.
7. Once the spare tire is completely lowered, reach under the vehicle, remove the retainer chain, and carefully slide the tire from under the rear of the vehicle.

⚠ CAUTION

Be sure to center the spare tire suspending plate on the wheel and then lift the spare tire.

Jacking up vehicle and removing the damaged tire

⚠ WARNING

- **Never get under the vehicle while it is supported only by the jack. If it is necessary to work under the vehicle, support it with safety stands.**
- **Use only the jack provided with your vehicle to lift the vehicle. Do not use the jack provided with your vehicle on other vehicles. The jack is designed for lifting only your vehicle during a tire change.**
- **Use the correct jack-up points. Never use any other part of the vehicle for jack support.**
- **Never jack up the vehicle more than necessary.**
- **Never use blocks on or under the jack.**
- **Do not start or run the engine while vehicle is on the jack. It may cause the vehicle to move. This is especially true for vehicles with limited slip differentials.**
- **Do not allow passengers to stay in the vehicle while it is on the jack.**
- **Never run the engine with a wheel(s) off the ground. It may cause the vehicle to move.**

Always refer to the illustration for the correct placement and jack-up points for your specific vehicle model and jack type.

Carefully read the caution label attached to the jack body and the following instructions.

1. Loosen each wheel nut one or two turns by turning counterclockwise with the wheel nut wrench. **Do not remove the wheel nuts until the tire is off the ground.**

NOTE:

Before jacking up the vehicle, make sure the ignition key is in the OFF position. If the vehicle is lifted up with the ignition key in the ON position the auto-leveling suspension (if so equipped) will become disabled after 60 seconds. To reset the auto-leveling suspension, cycle the ignition key ON/OFF one time.

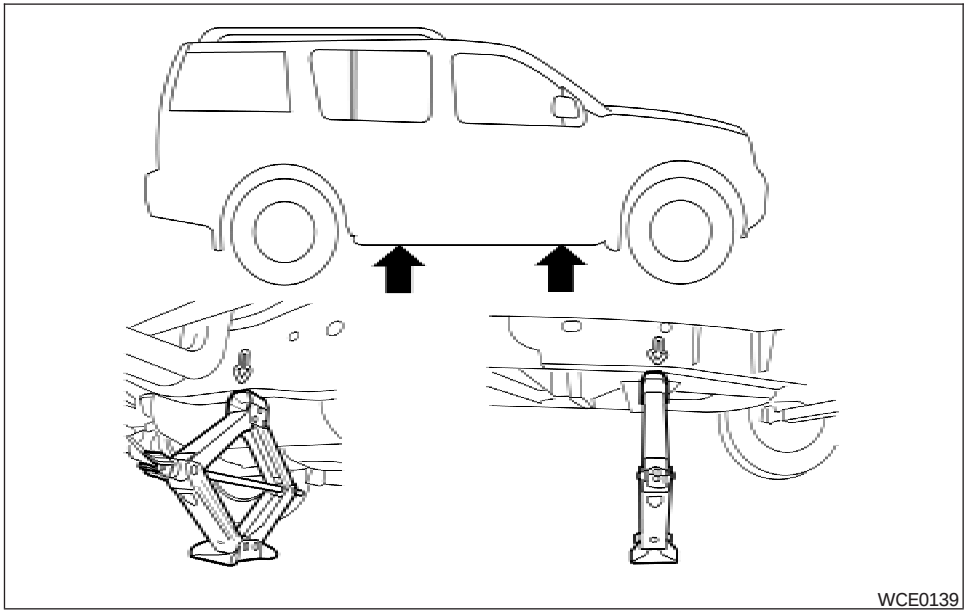

2. Place the jack directly under the jack-up point as illustrated so the top of the jack contacts the vehicle at the jack-up point. The jack-up points are indicated by stamped arrows on the side of the frame.

The jack should be used on firm and level ground.

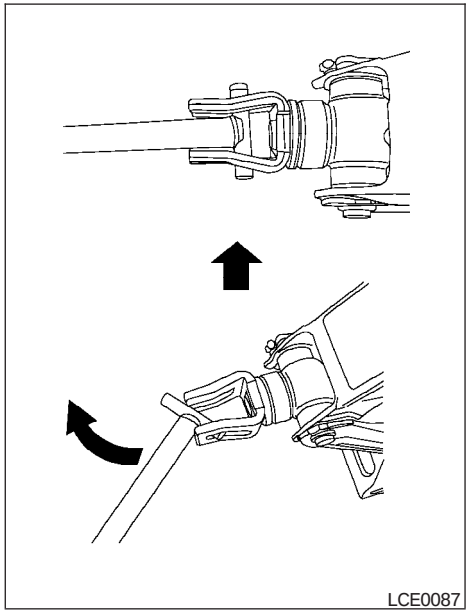

3. Install the assembled jack rod into the jack as shown.
4. To lift the vehicle, securely hold the jack lever and rod. Carefully raise the vehicle until the tire clears the ground.
5. Remove the wheel nuts and then remove the tire.

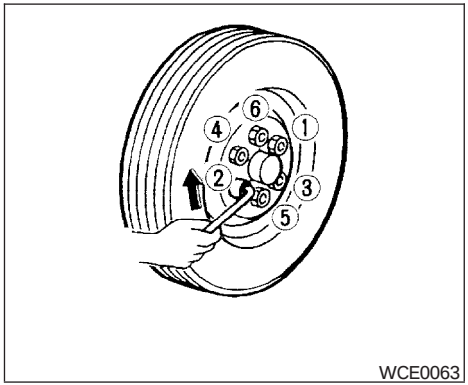

Installing the spare tire

The spare tire is designed for emergency use. See specific instructions under the heading "Wheels and tires" in the "Maintenance and do-it-yourself" section of this manual.

1. Clean any mud or dirt from the surface between the wheel and hub.
2. Carefully put the spare tire on and tighten the wheel nuts finger tight.
3. With the wheel nut wrench, tighten wheel nuts alternately and evenly as illustrated until they are tight.
4. Lower the vehicle slowly until the tire touches the ground. Then, with the wheel nut wrench, tighten the wheel nuts securely in the sequence illustrated. Lower the vehicle completely.

⚠ WARNING

- **Incorrect wheel nuts or improperly tightened wheel nuts can cause the wheel to become loose or come off. This could cause an accident.**
- **Do not use oil or grease on the wheel studs or nuts. This could cause the nuts to become loose.**
- **Retighten the wheel nuts when the vehicle has been driven for 600 miles (1,000 km) (also in cases of a flat tire, etc.).**

As soon as possible, tighten the wheel nuts to the specified torque with a torque wrench.

Wheel nut tightening torque:

98 ft-lb (133 N·m)

The wheel nuts must be kept tightened to specification at all times. It is recommended that wheel nuts be tightened to specifications at each lubrication interval.

Adjust tire pressure to the COLD pressure.

COLD pressure: After vehicle has been parked for three hours or more or driven less than 1 mile (1.6 km).

COLD tire pressures are shown on the Tire and Loading Information label affixed to the driver side center pillar.

After adjusting tire pressure to the COLD tire pressure, the display of the tire pressure information may show higher pressure than the COLD tire pressure after the vehicle has been driven more than 1 mile (1.6 km). This is because the tire pressure increases as the tire temperature rises. This does not indicate a system malfunction.

5. Securely store the flat tire and jacking equipment in the vehicle.

⚠WARNING

- **Always make sure that the spare tire and jacking equipment are properly secured after use. Such items can become dangerous projectiles in an accident or sudden stop.**
- **The spare tire is designed for emergency use. See specific instructions under the heading "Wheels and tires" in the "Maintenance and do-it-yourself" section of this manual.**

JUMP STARTING

To start your engine with a booster battery, the instructions and precautions below must be followed.

⚠WARNING

- **If done incorrectly, jump starting can lead to a battery explosion, resulting in severe injury or death. It could also damage your vehicle.**
- **Explosive hydrogen gas is always present in the vicinity of the battery. Keep all sparks and flames away from the battery.**
- **Do not allow battery fluid to come into contact with eyes, skin, clothing or painted surfaces. Battery fluid is a corrosive sulfuric acid solution which can cause severe burns. If the fluid should come into contact with anything, immediately flush the contacted area with water.**
- **Keep battery out of the reach of children.**
- **The booster battery must be rated at 12 volts. Use of an improperly rated battery can damage your vehicle.**
- **Whenever working on or near a battery, always wear suitable eye protectors (for example, goggles or industrial safety spectacles) and remove rings, metal bands, or any other jewelry. Do not lean over the battery when jump starting.**
- **Do not attempt to jump start a frozen battery. It could explode and cause serious injury.**
- **Your vehicle has an automatic engine cooling fan. It could come on at any time. Keep hands and other objects away from it.**

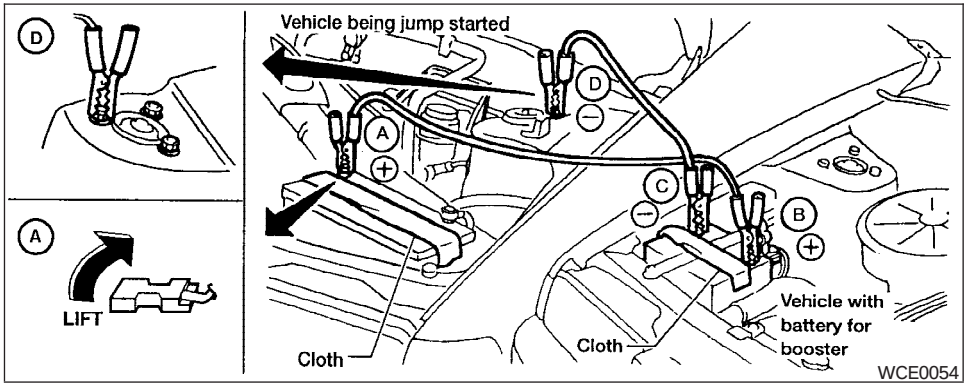

⚠ WARNING

Always follow the instructions below. Failure to do so could result in damage to the charging system and cause personal injury.

1. If the booster battery is in another vehicle, position the two vehicles to bring their batteries near each other.

   Do not allow the two vehicles to touch.

2. Apply the parking brake. Move the shift selector lever to P (Park). Switch off all unnecessary electrical systems (lights, heater, air conditioner, etc.).
3. Remove vent caps on the battery (if so equipped). Cover the battery with an old cloth to reduce explosion hazard.
4. Connect jumper cables in the sequence illustrated (Ⓐ, Ⓑ, Ⓒ, Ⓓ).

⚠ CAUTION

- **Always connect positive (+) to positive (+) and negative (−) to body ground (for example, strut mounting bolt, engine lift bracket, etc.) — not to the battery.**
- **Make sure the jumper cables do not touch moving parts in the engine compartment and that the cable clamps do not contact any other metal.**

5. Start the engine of the booster vehicle and let it run for a few minutes.
6. Keep the engine speed of the booster vehicle at about 2,000 rpm, and start the engine of the vehicle being jump started.

⚠ CAUTION

Do not keep the starter motor engaged for more than 10 seconds. If the engine does not start right away, turn the key off and wait 3 to 4 seconds before trying again.

7. After starting the engine, carefully disconnect the negative cable and then the positive cable.
8. Replace the vent caps (if so equipped). Be sure to dispose of the cloth used to cover the vent holes as it may be contaminated with corrosive acid.

PUSH STARTING

⚠ CAUTION

Automatic transmission models cannot be push-started or tow-started. Attempting to do so may cause transmission damage.

IF YOUR VEHICLE OVERHEATS

⚠ WARNING

- **Do not continue to drive if your vehicle overheats. Doing so could cause engine damage or a vehicle fire.**
- **To avoid the danger of being scalded, never remove the radiator or coolant reservoir cap while the engine is still hot. When the radiator or coolant reservoir cap is removed, pressurized hot water will spurt out, possibly causing serious injury.**
- **Do not open the hood if steam is coming out.**

If your vehicle is overheating (indicated by an extremely high temperature gauge reading and the illumination of the engine oil pressure/engine coolant temperature high indicator light), or if you feel a lack of engine power, detect abnormal noise, etc. take the following steps.

1. Move the vehicle safely off the road, apply the parking brake and move the shift lever to P (Park).

   Do not stop the engine.

2. Turn off the air conditioner. Open all the windows, move the heater or air conditioner temperature control to maximum hot and fan control to high speed.
3. Get out of the vehicle. Look and listen for steam or coolant escaping from the radiator before opening the hood. (If steam or coolant is escaping, turn off the engine.) Do not open the hood further until no steam or coolant can be seen.
4. Open the engine hood.

⚠ WARNING

If steam or water is coming from the engine, stand clear to prevent getting burned.

5. Visually check drive belts for damage or looseness. Also check if the cooling fan is running. The radiator hoses and radiator should not leak water. If coolant is leaking, the water pump belt is missing or loose, or the cooling fan does not run, stop the engine.

⚠ WARNING

Be careful not to allow your hands, hair, jewelry or clothing to come into contact with, or get caught in, engine belts or the engine cooling fan. The engine cooling fan can start at any time.

6. After the engine cools down, check the coolant level in the engine coolant reservoir tank with the engine running. Add coolant to the engine coolant reservoir tank if necessary. Have your vehicle repaired at an INFINITI dealer.

When towing your vehicle, all State (Provincial in Canada) and local regulations for towing must be followed. Incorrect towing equipment could damage your vehicle. Towing instructions are available from an INFINITI dealer. Local service operators are generally familiar with the applicable laws and procedures for towing. To assure proper towing and to prevent accidental damage to your vehicle, INFINITI recommends having a service operator tow your vehicle. It is advisable to have the service operator carefully read the following precautions:

WARNING

- **Never ride in a vehicle that is being towed.**
- **Never get under your vehicle after it has been lifted by a tow truck.**

CAUTION

- **When towing, make sure that the transmission, axles, steering system and powertrain are in working condition. If any unit is damaged, dollies must be used.**
- **Always attach safety chains before towing.**

For information about towing your vehicle behind a recreational vehicle (RV), refer to “Flat towing” in the “Technical and consumer information” section of this manual.

TOWING RECOMMENDED BY INFINITI

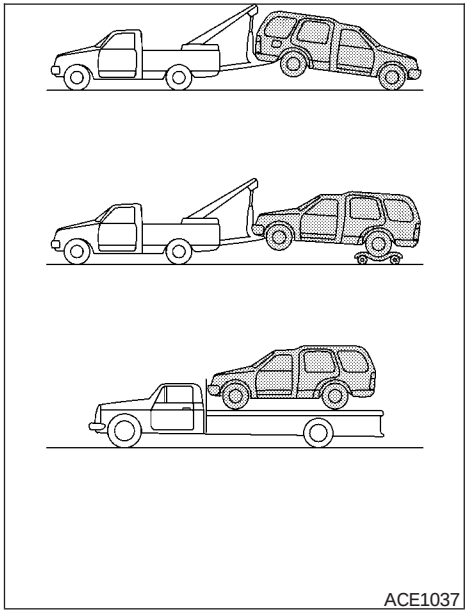

Two-wheel drive models

INFINITI recommends that your vehicle be towed with the driving (rear) wheels off the ground or place the vehicle on a flat bed truck as illustrated.

⚠ CAUTION

- **Never tow automatic transmission models with the rear wheels on the ground or four wheels on the ground (forward or backward), as this may cause serious and expensive damage to the transmission. If it is necessary to tow the vehicle with the front wheels raised always use towing dollies under the rear wheels.**
- **When towing automatic transmission models with the front wheels on the ground or on towing dollies:**
  - **Turn the ignition key to the OFF position, and secure the steering wheel in a straight-ahead position with a rope or similar device. Never secure the steering wheel by turning the ignition key to the LOCK position. This may damage the steering lock mechanism.**

If the speed or distance must necessarily be greater, remove the propeller shaft before towing to prevent damage to the transmission.

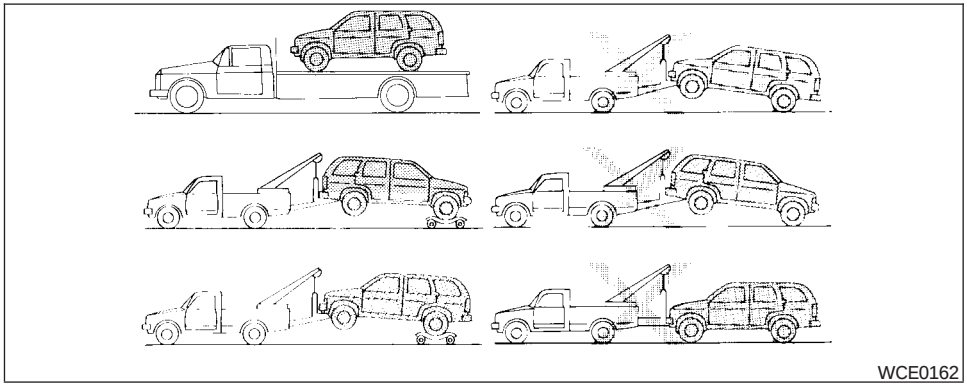

Four-wheel drive models

INFINITI recommends that towing dollies be used when towing your vehicle or place the vehicle on a flat bed truck as illustrated.

⚠ CAUTION

- **Never tow 4WD models with any of the wheels on the ground as this may cause serious and expensive damage to the transfer case and transmission.**

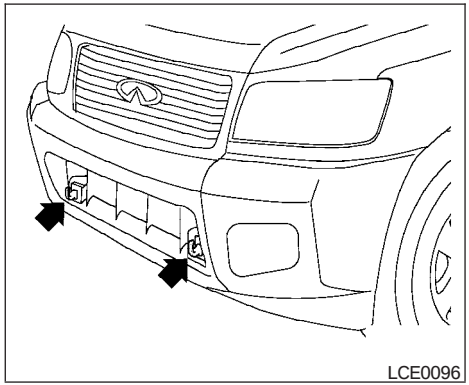

VEHICLE RECOVERY (freeing a stuck vehicle)

Pulling a stuck vehicle

If your vehicle is stuck in sand, snow, mud, etc., use a tow strap or other device designed specifically for vehicle recovery. Always follow the recovery device manufacturer's instructions.

Attach the tow strap to the towing hook.

⚠ WARNING

- **Stand clear of a stuck vehicle.**
- **Do not spin your tires at high speed. This could cause them to explode and result in serious injury. Parts of your vehicle could also overheat and be damaged.**

⚠ CAUTION

- **Tow chains or cables must be attached only to the main structural members of the vehicle or the towing hooks (if so equipped). Otherwise, the vehicle body will be damaged.**
- **Use the towing hook (if so equipped) only to free a vehicle stuck in sand, snow, mud, etc. Never tow the vehicle for a long distance using only the towing hook.**
- **The towing hook is under tremendous force when used to free a stuck vehicle. Never pull the hook at an angle.**
- **Always pull the cable straight out from the front or rear of the vehicle.**
- **Pulling devices should be routed so they do not touch any part of the suspension, steering, brake or cooling systems.**
- **Pulling devices such as ropes or canvas straps are not recommended for use in vehicle towing or recovery.**

Rocking a stuck vehicle

If your vehicle is stuck in sand, snow, mud, etc., use the following procedure:

1. Turn off the Vehicle Dynamic Control System (if so equipped).
2. Make sure the area in front and behind the vehicle is clear of obstructions.
3. Turn the steering wheel right and left to clear an area around the front tires.
4. Slowly rock the vehicle forward and backward.
   - Shift back and forth between R (Reverse) and D (Drive).
   - Apply the accelerator as little as possible to maintain the rocking motion.
   - Release the accelerator pedal before shifting between R and D.
   - Do not spin the tires above 35 MPH (55 km/h).
5. If the vehicle cannot be freed after a few tries, contact a professional towing service to remove the vehicle.

7 Appearance and care

Cleaning exterior 7-2
Washing 7-2
Waxing 7-2
Removing spots 7-3
Underbody 7-3
Glass 7-3
Aluminum alloy wheels 7-3
Chrome parts 7-3
Tire dressings 7-3
Cleaning interior 7-4
Floor mats 7-4
Seat belts 7-5
Corrosion protection 7-5
Most common factors contributing to vehicle corrosion 7-5
Environmental factors influence the rate of corrosion 7-5
To protect your vehicle from corrosion 7-5

CLEANING EXTERIOR

In order to maintain the appearance of your vehicle, it is important to take proper care of it.

To protect the paint surfaces, please wash your vehicle as soon as you can:

- after a rainfall to prevent possible damage from acid rain.
- after driving on coastal roads.
- when contaminants such as soot, bird droppings, tree sap, metal particles or bugs get on the paint surface.
- when dust or mud builds up on the surface.

Whenever possible, store or park your vehicle inside a garage or in a covered area.

When it is necessary to park outside, park in a shady area or protect the vehicle with a body cover.

Be careful not to scratch the paint surface when putting on or removing the body cover.

WASHING

Wash dirt off with a wet sponge and plenty of water. Clean the vehicle thoroughly using a mild soap, a special vehicle soap or general purpose dishwashing liquid mixed with clean, lukewarm (never hot) water.

⚠ CAUTION

- **Do not use car washes that use acid in the detergent. Some car washes, especially brushless ones, use some acid for cleaning. The acid may react with some plastic vehicle components, causing them to crack. This could affect their appearance, and also could cause them not to function properly. Always check with your car wash to confirm that acid is not used.**
- **Do not wash the vehicle with strong household soap, strong chemical detergents, gasoline or solvents.**
- **Do not wash the vehicle in direct sunlight or while the vehicle body is hot, as the surface may become water-spotted.**
- **Avoid using tight-napped or rough cloths, such as washing mitts. Care must be taken when removing caked-on dirt or other foreign substances so the paint surface is not scratched or damaged.**

Rinse the vehicle thoroughly with plenty of clean water.

Inside flanges, seams and folds on the doors, hatches and hood are particularly vulnerable to the effects of road salt. Therefore, these areas must be cleaned regularly. Take care that the drain holes in the lower edge of the door are open. Spray water under the body and in the wheel wells to loosen the dirt and wash away road salt.

A damp chamois can be used to dry the vehicle to avoid water spots.

WAXING

Regular waxing protects the paint surface and helps retain new vehicle appearance. Polishing is recommended to remove built-up wax residue and to avoid a weathered appearance before re-applying wax.

An INFINITI dealer can assist you in choosing the proper product.

- Wax your vehicle only after a thorough washing. Follow the instructions supplied with the wax.
- Do not use a wax containing any abrasives, cutting compounds or cleaners that may damage the vehicle finish.

Machine compounding or aggressive polishing on a base coat/clear coat paint finish may dull the finish or leave swirl marks.

REMOVING SPOTS

Remove tar and oil spots, industrial dust, insects, and tree sap as quickly as possible from the surface of the paint to avoid lasting damage or staining. Special cleaning products are available at an INFINITI dealer or any automotive accessory store.

UNDERBODY

In areas where road salt is used in winter, it is necessary to clean the underbody regularly in order to prevent dirt and salt from building up and causing the acceleration of corrosion on the underbody and suspension. Before the winter period and again in the spring, the underseal must be checked and, if necessary, retreated.

GLASS

Use glass cleaner to remove smoke and dust film from the glass surfaces. It is normal for glass to become coated with a film after the vehicle is parked in the hot sun. Glass cleaner and a soft cloth will easily remove this film.

⚠ CAUTION

When cleaning the inside of the windows, do not use sharp-edged tools, abrasive cleaners or chlorine-based disinfectant cleaners. They could damage the electrical conductors, radio antenna elements or rear window defroster elements.

ALUMINUM ALLOY WHEELS

Wash the wheels regularly with a sponge dampened in a mild soap solution, especially during winter months in areas where road salt is used. If not removed, road salt can discolor the wheels.

⚠ CAUTION

Follow the directions below to avoid staining or discoloring the wheels:

- **Do not use a cleaner that uses strong acid or alkali contents to clean the wheels.**
- **Do not apply wheel cleaners to the wheels when they are hot. The wheel temperature should be the same as ambient temperature.**
- **Rinse the wheel to completely remove the cleaner within 15 minutes after the cleaner is applied.**

CHROME PARTS

Clean all chrome parts regularly with a non-abrasive chrome polish to maintain the finish.

TIRE DRESSINGS

INFINITI does not recommend the use of tire dressings. Tire manufacturers apply a coating to the tires to help reduce discoloration of the rubber. If a tire dressing is applied to the tires, it may react with the coating and form a compound. This compound may come off the tire while driving and stain the vehicle paint.

If you choose to use a tire dressing, take the following precautions:

- Use a water-based tire dressing. The coating on the tire dissolves more easily with an oil-based tire dressing.
- Apply a light coat of tire dressing to help prevent it from entering the tire tread/grooves (where it would be difficult to remove).
- Wipe off excess tire dressing using a dry towel. Make sure the tire dressing is completely removed from the tire tread/grooves.
- Allow the tire dressing to dry as recommended by tire dressing manufacturer.

Occasionally remove loose dust from the interior trim, plastic parts and seats using a vacuum cleaner or soft bristled brush. Wipe the vinyl and leather surfaces with a clean, soft cloth dampened in mild soap solution, then wipe clean with a dry, soft cloth.

Regular care and cleaning is required in order to maintain the appearance of the leather.

Before using any fabric protector, read the manufacturer's recommendations. Some fabric protectors contain chemicals that may stain or bleach the seat material.

Use a cloth dampened only with water to clean the meter and gauge lens.

⚠ WARNING

Do not use water or acidic cleaners (hot steam cleaners) on the seat. This can damage the seat or occupant classification sensor. This can also affect the operation of the air bag system and result in serious personal injury.

⚠ CAUTION

- **Never use benzine, thinner or any similar material.**
- **Small dirt particles can be abrasive and damaging to leather surfaces and should be removed promptly. Do not use saddle soap, car waxes, polishes, oils, cleaning fluids, solvents, detergents or ammonia-based cleaners as they may damage the leather's natural finish.**
- **Never use fabric protectors unless recommended by the manufacturer.**
- **Do not use glass or plastic cleaner on meter or gauge lens covers. It may damage the lens cover.**

FLOOR MATS

The use of genuine INFINITI floor mats can extend the life of your vehicle carpet and make it easier to clean the interior. **No matter what mats are used, be sure they are fitted for your vehicle and are properly positioned in the footwell to prevent interference with pedal operation.** Mats should be maintained with regular cleaning and replaced if they become excessively worn.

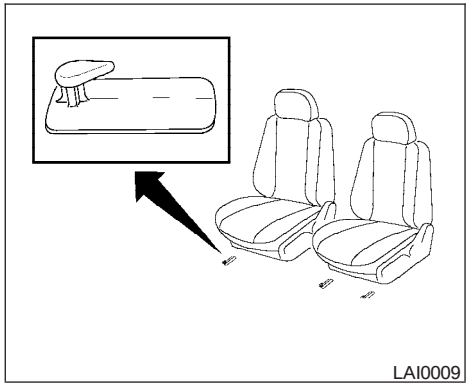

Floor mat positioning aid

This vehicle includes two driver's side front floor mat brackets and one passenger's side front floor mat bracket to help keep your floor mats in place. INFINITI floor mats have been specially designed for your vehicle model. The driver's side floor mat has two grommet holes incorporated in it and the passenger's side has one grommet hole. Position each mat by placing the floor mat bracket hook through the floor mat grommet holes while centering the mat in the footwell.

Periodically check to make certain the mats are properly positioned.

SEAT BELTS

The seat belts can be cleaned by wiping them with a sponge dampened in a mild soap solution. Allow the belts to dry completely in the shade before using them. See “Seat belt maintenance” in the “Safety – Seats, seat belts and supplemental restraint system” section of this manual.

⚠ WARNING

Do not allow wet seat belts to roll up in the retractor. NEVER use bleach, dye or chemical solvents to clean the seat belts, since these materials may severely weaken the seat belt webbing.

MOST COMMON FACTORS CONTRIBUTING TO VEHICLE CORROSION

- The accumulation of moisture-retaining dirt and debris in body panel sections, cavities, and other areas.
- Damage to paint and other protective coatings caused by gravel and stone chips or minor traffic accidents.

ENVIRONMENTAL FACTORS INFLUENCE THE RATE OF CORROSION

Moisture

Accumulation of sand, dirt and water on the vehicle body underside can accelerate corrosion. Wet floor coverings will not dry completely inside the vehicle, and should be removed for drying to avoid floor panel corrosion.

Relative humidity

Corrosion will be accelerated in areas of high relative humidity, especially those areas where the temperatures stay above freezing and where atmospheric pollution exists and road salt is used.

Temperature

High temperatures accelerate the rate of corrosion to those parts which are not well ventilated.

Air pollution

Industrial pollution, the presence of salt in the air in coastal areas, or heavy road salt use accelerates the corrosion process. Road salt also accelerates the disintegration of paint surfaces.

TO PROTECT YOUR VEHICLE FROM CORROSION

- Wash and wax your vehicle often to keep the vehicle clean.
- Always check for minor damage to the paint and repair it as soon as possible.
- Keep drain holes at the bottom of the doors open to avoid water accumulation.
- Check the underbody for accumulation of sand, dirt or salt. If present, wash with water as soon as possible.

⚠ CAUTION

- **NEVER remove dirt, sand or other debris from the passenger compartment by washing it out with a hose. Remove dirt with a vacuum cleaner or broom.**
- **Never allow water or other liquids to come in contact with electronic components inside the vehicle as this may damage them.**

Chemicals used for road surface de-icing are extremely corrosive. They accelerate corrosion and deterioration of underbody components such as the exhaust system, fuel and brake lines, brake cables, floor pan and fenders.

In winter, the underbody must be cleaned periodically.

For additional protection against rust and corrosion, which may be required in some areas, consult an INFINITI dealer.

8 Maintenance and do-it-yourself

Maintenance requirements 8-2
General maintenance 8-2
Explanation of general maintenance items 8-2
Maintenance precautions 8-5
Engine compartment check locations 8-6
Engine cooling system 8-7
Checking engine coolant level 8-7
Changing engine coolant 8-8
Engine oil 8-8
Checking engine oil level 8-8
Changing engine oil 8-9
Changing engine oil filter 8-10
5-speed automatic transmission fluid 8-11
Power steering fluid 8-11
Brake fluid 8-12
Brake fluid 8-12
Window washer fluid 8-12
Window washer fluid reservoir 8-12
Battery 8-13
Jump starting 8-14
Variable Voltage Control System 8-15
Drive belt 8-15
Spark plugs 8-16
Replacing spark plugs 8-16
Air cleaner 8-17
In-cabin microfilter 8-17
Windshield wiper blades 8-19
Cleaning 8-19
Replacing 8-19
Brakes 8-22
Fuses 8-22
Engine compartment 8-23
Passenger compartment 8-24
Battery replacement 8-25
Intelligent Key 8-26
Lights 8-27
Headlights 8-27
Exterior and interior lights 8-28
Wheels and tires 8-32
Tire pressure 8-32
Tire labeling 8-35
Types of tires 8-38
Tire chains 8-39
Changing wheels and tires 8-39

MAINTENANCE REQUIREMENTS

Your new INFINITI has been designed to have minimum maintenance requirements with long service intervals to save you both time and money. However, some day-to-day and regular maintenance is essential to maintain your INFINITI's good mechanical condition, as well as its emission and engine performance.

It is the owner's responsibility to make sure that the scheduled maintenance, as well as general maintenance, is performed.

As the vehicle owner, you are the only one who can ensure that your vehicle receives proper maintenance. You are a vital link in the maintenance chain.

Scheduled maintenance

For your convenience, both required and optional scheduled maintenance items are described and listed in your "INFINITI Service and Maintenance Guide". You must refer to that guide to ensure that necessary maintenance is performed on your INFINITI at regular intervals.

General maintenance

General maintenance includes those items which should be checked during normal day-to-day operation. They are essential for proper vehicle operation. It is your responsibility to perform these maintenance procedures regularly as prescribed.

Performing general maintenance checks requires minimal mechanical skill and only a few general automotive tools.

These checks or inspections can be done by you, a qualified technician, or, if you prefer, an INFINITI dealer.

Where to go for service

If maintenance service is required or your vehicle appears to malfunction, have the systems checked and corrected by an INFINITI dealer.

INFINITI technicians are well-trained specialists who are kept up-to-date with the latest service information through technical bulletins, service tips, and in-dealership training programs. They are completely qualified to work on INFINITI vehicles **before** they work on your vehicle, rather than after they have worked on it.

You can be confident that an INFINITI dealer's service department performs the best job to meet the maintenance requirements on your vehicle — in a reliable and economical way.

GENERAL MAINTENANCE

During the normal day-to-day operation of the vehicle, general maintenance should be performed regularly as prescribed in this section. If you detect any unusual sounds, vibrations or smells, be sure to check for the cause or have an INFINITI dealer do it promptly. In addition, you should notify an INFINITI dealer if you think that repairs are required.

When performing any checks or maintenance work, closely observe the "Maintenance precautions" later in this section.

EXPLANATION OF GENERAL MAINTENANCE ITEMS

Additional information on the following items with "*" is found later in this section.

Outside the vehicle

The maintenance items listed here should be performed from time to time, unless otherwise specified.

Doors and engine hood Check that the doors and engine hood operate properly. Also ensure that all latches lock securely. Lubricate hinges, latches, latch pins, rollers and links as necessary. Make sure that the secondary latch keeps the hood from opening when the primary latch is released.

When driving in areas using road salt or other corrosive materials, check lubrication frequently.

Lights* Clean the headlights on a regular basis. Make sure that the headlights, stop lights, tail lights, turn signal lights, and other lights are all operating properly and installed securely. Also check headlight aim.

Road wheel nuts (lug nuts)* When checking the tires, make sure no wheel nuts are missing, and check for any loose wheel nuts. Tighten if necessary.

Tire rotation* Tires should be rotated every 7,500 miles (12,000 km).

Tires* Check the pressure with a gauge often and always prior to long distance trips. If necessary, adjust the pressure in all tires, including the spare, to the pressure specified. Check carefully for damage, cuts or excessive wear.

Tire Pressure Monitoring System (TPMS) transmitter components Replace the TPMS transmitter grommet seal, valve core and cap when the tires are replaced due to wear or age.

Wheel alignment and balance If the vehicle should pull to either side while driving on a straight and level road, or if you detect uneven or abnormal tire wear, there may be a need for wheel alignment. If the steering wheel or seat vibrates at normal highway speeds, wheel balancing may be needed.

- For additional information regarding tires, refer to “Important Tire Safety Information” (US) or “Tire Safety Information” (Canada) in the Warranty Information Booklet .

Windshield Clean the windshield on a regular basis. Check the windshield at least every six months for cracks or other damage. Have a damaged windshield repaired by a qualified repair facility.

Windshield wiper blades* Check for cracks or wear if they do not wipe properly.

Inside the vehicle

The maintenance items listed here should be checked on a regular basis, such as when performing periodic maintenance, cleaning the vehicle, etc.

Additional information on the following items with an “*” is found later in this section.

Accelerator pedal Check the pedal for smooth operation and make sure the pedal does not bind or require uneven effort. Keep the floor mat away from the pedal.

Automatic transmission P (Park) position mechanism On a fairly steep hill check that your vehicle is held securely with the shift selector lever in the P (Park) position without applying any brakes.

Brake pedal Check the pedal for smooth operation. If the brake pedal suddenly goes down further than normal, the pedal feels spongy or the vehicle seems to take longer to stop, see an INFINITI dealer immediately. Keep the floor mat away from the pedal.

Brakes Check that the brakes do not pull the vehicle to one side when applied.

Parking brake Check the parking brake operation regularly. The vehicle should be securely held on a fairly steep hill with only the parking brake applied. If the parking brake needs adjustment, see an INFINITI dealer.

Seats Check seat position controls such as seat adjusters, seatback recliner, etc. to ensure they operate smoothly and all latches lock securely in every position. Check that the head restraints move up and down smoothly and the locks (if so equipped) hold securely in all latched positions.

Seat belts Check that all parts of the seat belt system (for example, buckles, anchors, adjusters and retractors) operate properly and smoothly,

and are installed securely. Check the belt webbing for cuts, fraying, wear or damage.

Steering wheel Check for changes in the steering system, such as excessive freeplay, hard steering or strange noises.

Warning lights and chimes Make sure all warning lights and chimes are operating properly.

Windshield wiper and washer* Check that the wipers and washer operate properly and that the wipers do not streak.

Windshield defroster Check that the air comes out of the defroster outlets properly and in sufficient quantity when operating the heater or air conditioner.

Under the hood and vehicle

The maintenance items listed here should be checked periodically (for example, each time you check the engine oil or refuel).

Battery* Check the fluid level in each cell. It should be between the MAX and MIN lines. Vehicles operated in high temperatures or under severe conditions require frequent checks of the battery fluid level.

Brake fluid level* Make sure that the brake fluid level is between the MIN and MAX lines on the reservoir.

Engine coolant level* Check the coolant level when the engine is cold.

Engine drive belts* Make sure the drive belts are not frayed, worn, cracked or oily.

Engine oil level* Check the level after parking the vehicle on a level surface with the engine off. Wait more than 10 minutes for the oil to drain back into the oil pan.

Exhaust system Make sure there are no loose supports, cracks or holes. If the sound of the exhaust seems unusual or there is a smell of exhaust fumes, immediately have the exhaust system inspected by an INFINITI dealer. See the carbon monoxide warning in the “Starting and driving” section of this manual.

Fluid leaks Check under the vehicle for fuel, oil, water or other fluid leaks after the vehicle has been parked for a while. Water dripping from the air conditioner after use is normal. If you should notice any leaks or if gasoline fumes are evident, check for the cause and have it corrected immediately.

Power steering fluid level* and lines Check the level when the fluid is cold, with the engine off. Check the lines for proper attachment, leaks, cracks, etc.

Radiator and hoses Check the front of the radiator and clean off any dirt, insects, leaves, etc., that may have accumulated. Make sure the hoses have no cracks, deformation, rot or loose connections.

Underbody The underbody is frequently exposed to corrosive substances such as those used on icy roads or to control dust. It is very important to remove these substances from the underbody, otherwise rust may form on the floor pan, frame, fuel lines and exhaust system. At the end of winter, the underbody should be thoroughly flushed with plain water, in those areas where mud and dirt may have accumulated. See the “Appearance and care” section of this manual.

Windshield washer fluid* Check that there is adequate fluid in the reservoir.

MAINTENANCE PRECAUTIONS

When performing any inspection or maintenance work on your vehicle, always take care to prevent serious accidental injury to yourself or damage to the vehicle. The following are general precautions which should be closely observed.

⚠ WARNING

- **Park the vehicle on a level surface, apply the parking brake securely and block the wheels to prevent the vehicle from moving. Move the shift selector lever to P (Park).**
- **Be sure the ignition key is in the OFF or LOCK position when performing any parts replacement or repairs.**
- **Your vehicle is equipped with an automatic engine cooling fan. It may come on at any time without warning, even if the ignition key is in the OFF position and the engine is not running. To avoid injury, always disconnect the negative battery cable before working near the fan.**
- **If you must work with the engine running, keep your hands, clothing, hair and tools away from moving fans, belts and any other moving parts.**
- **It is advisable to secure or remove any loose clothing and remove any jewelry, such as rings, watches, etc. before working on your vehicle.**
- **Always wear eye protection whenever you work on your vehicle.**
- **If you must run the engine in an enclosed space such as a garage, be sure there is proper ventilation for exhaust gases to escape.**
- **Never get under the vehicle while it is supported only by a jack. If it is necessary to work under the vehicle, support it with safety stands.**
- **Keep smoking materials, flame and sparks away from the fuel tank and battery.**
- **On gasoline engine models, the fuel filter or fuel lines should be serviced by an INFINITI dealer because the fuel lines are under high pressure even when the engine is off.**

⚠ CAUTION

- **Do not work under the hood while the engine is hot. Turn the engine off and wait until it cools down.**
- **Avoid contact with used engine oil and coolant. Improperly disposed engine oil, engine coolant and/or other vehicle fluids can damage the environment. Always conform to local regulations for disposal of vehicle fluid.**
- **Never leave the engine or automatic transmission related component harnesses disconnected while the ignition switch is in the ON position.**
- **Never connect or disconnect the battery or any transistorized component while the ignition switch is in the ON position.**

This “Maintenance and do-it-yourself” section gives instructions regarding only those items which are relatively easy for an owner to perform.

A genuine INFINITI service manual is also available. See “Owner’s Manual/Service Manual order information” in the “Technical and consumer information” section of this manual.

You should be aware that incomplete or improper servicing may result in operating difficulties or excessive emissions, and could affect warranty coverage. **If in doubt about any servicing, have it done by an INFINITI dealer.**

ENGINE COMPARTMENT CHECK LOCATIONS

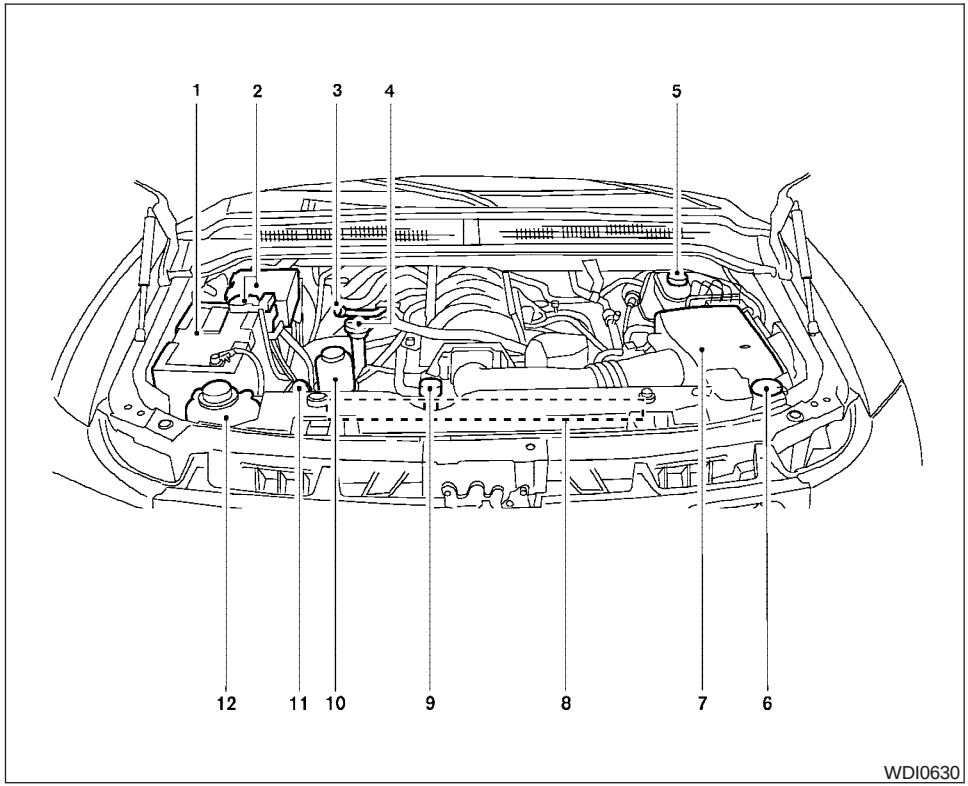

1. Battery
2. Fuse/fusible link box
3. Transmission dipstick
4. Engine oil filler cap
5. Brake fluid reservoir
6. Windshield washer fluid reservoir
7. Air cleaner
8. Drive belt location
9. Radiator cap
10. Power steering fluid reservoir
11. Engine oil dipstick
12. Engine coolant reservoir

NOTE:

Engine cover removed for clarity.

ENGINE COOLING SYSTEM

The engine cooling system is filled at the factory with Genuine NISSAN Long Life Antifreeze/ Coolant to provide year-round anti-freeze and coolant protection.The anti-freeze solution contains rust and corrosion inhibitors. Additional engine cooling system additives are not necessary.

⚠ WARNING

- **Never remove the radiator or coolant reservoir cap when the engine is hot. Wait until the engine and radiator cool down. Serious burns could be caused by high pressure fluid escaping from the radiator. See precautions in "If your vehicle overheats" found in the "In case of emergency" section of this manual.**
- **The radiator is equipped with a pressure type radiator cap. To prevent engine damage, use only a genuine NISSAN radiator cap.**

⚠ CAUTION

When adding or replacing coolant, be sure to use only a Genuine NISSAN Long Life Antifreeze/Coolant (green) or equivalent with the proper mixture ratio of 50% antifreeze and 50% demineralized or distilled water. The use of other types of coolant solutions or coolant colors, such as orange, may damage the engine cooling system.

Outside temperature down to		Genuine NISSAN Long Life Antifreeze/ Coolant or equivalent	Demineralized or distilled water
°C	°F		
-35	-30	50%	50%

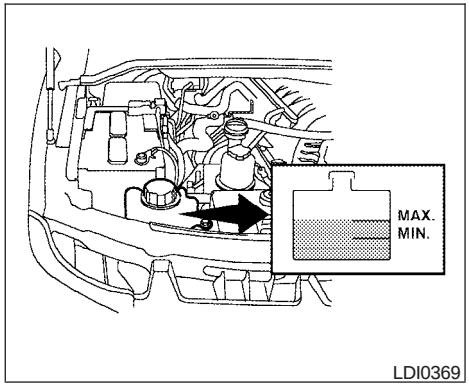

LDI0369

CHECKING ENGINE COOLANT LEVEL

Check the coolant level **in the reservoir when the engine is cold.** If the coolant level is below the MIN level, add coolant to the MAX level. If the reservoir is empty, check the coolant level in the radiator **when the engine is cold.** If there is insufficient coolant in the radiator, fill the radiator with coolant up to the filler opening and also add it to the reservoir up to the MAX level.

The engine coolant reservoir is a pressurized tank. When installing the cap, tighten it until a clicking sound is heard.

If the cooling system frequently requires coolant, have it checked by an INFINITI dealer.

CHANGING ENGINE COOLANT

An INFINITI dealer can change the engine coolant. The service procedure can be found in the INFINITI Service Manual.

Improper servicing can result in reduced heater performance and engine overheating.

WARNING

- **To avoid the danger of being scalded, never change the coolant when the engine is hot.**
- **Never remove the radiator or engine coolant reservoir cap when the engine is hot. Serious burns could be caused by high pressure fluid escaping from the radiator.**
- **Avoid direct skin contact with used coolant. If skin contact is made, wash thoroughly with soap or hand cleaner as soon as possible.**
- **Keep coolant out of the reach of children and pets.**

Engine coolant must be disposed of properly. Check your local regulations.

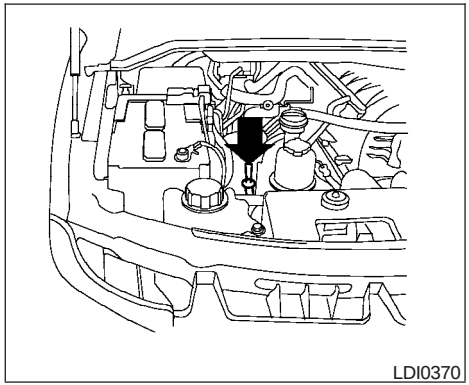

CHECKING ENGINE OIL LEVEL

1. Park the vehicle on a level surface and apply the parking brake.
2. Start the engine and let it idle until it reaches operating temperature.
3. Turn off the engine. **Wait more than 10 minutes for the oil to drain back into the oil pan.**
4. Remove the dipstick and wipe it clean. Reinsert it all the way.

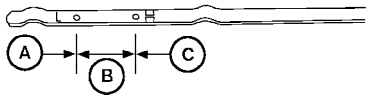

LDI0371

5. Remove the dipstick again and check the oil level. It should be between the H (High) and L (Low) marks Ⓑ. This is the normal operating oil level range. If the oil level is below the L (Low) mark Ⓐ, remove the oil filler cap and pour recommended oil through the opening. **Do not overfill Ⓒ.**
6. Recheck oil level with the dipstick.

It is normal to add some oil between oil maintenance intervals or during the break-in period, depending on the severity of operating conditions.

⚠CAUTION

Oil level should be checked regularly. Operating the engine with an insufficient amount of oil can damage the engine, and such damage is not covered by warranty.

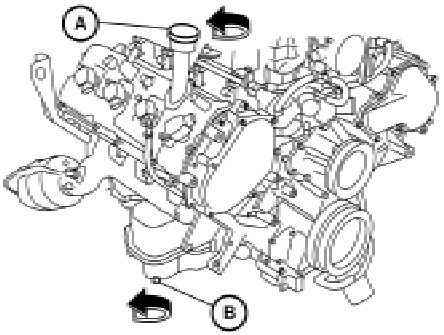

WDI0504

CHANGING ENGINE OIL

Change the engine oil and filter according to the maintenance intervals shown in the “INFINITI Service and Maintenance Guide”.

Vehicle set-up

1. Park the vehicle on a level surface and apply the parking brake.
2. Start the engine and let it idle until it reaches operating temperature, then turn it off.
3. Remove the oil filler cap Ⓐ by turning it counterclockwise.

4. Place a large drain pan under the drain plug Ⓑ.
5. Remove the drain plug Ⓑ with a wrench by turning it counterclockwise and completely drain the oil.

   If the oil filter is to be changed, remove and replace it at this time. See “Changing engine oil filter” later in this section.

- **Waste oil must be disposed of properly.**
- **Check your local regulations.**

⚠ WARNING

- **Prolonged and repeated contact with used engine oil may cause skin cancer.**
- **Try to avoid direct skin contact with used oil. If skin contact is made, wash thoroughly with soap or hand cleaner as soon as possible.**
- **Keep used engine oil out of reach of children.**

⚠ CAUTION

Be careful not to burn yourself. The engine oil may be hot.

6. Clean and reinstall the drain plug and a new washer. Securely tighten the drain plug with a wrench. Do not use excessive force.

   Drain plug tightening torque:
   22 - 29 ft-lb (29 - 39 N·m)

7. Refill engine with recommended oil through the oil filler opening, then install the oil filler cap securely.

   See “Capacities and recommended fuel/lubricants” in the “Technical and consumer information” section of this manual for drain and refill capacity.

   The drain and refill capacity depends on the oil temperature and drain time. Use these specifications for reference only. Always use the dipstick to determine when the proper amount of oil is in the engine.

8. Start the engine. Check for leakage around the drain plug and oil filter. Correct as required.
9. Turn the engine off and wait more than 10 minutes. Check the oil level with the dipstick. Add engine oil if necessary.

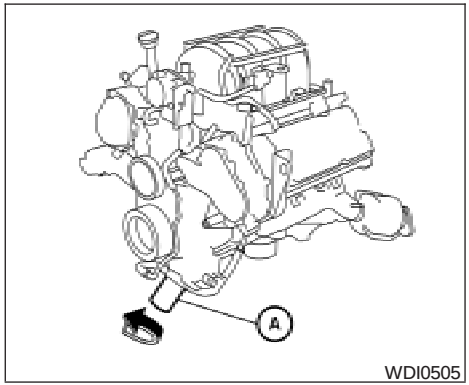

CHANGING ENGINE OIL FILTER

1. Park the vehicle on a level surface and apply the parking brake.
2. Turn the engine off.
3. Place a large drain pan under the oil filter Ⓐ.
4. Loosen the oil filter Ⓐ with an oil filter wrench by turning it counterclockwise. Then remove the oil filter by turning it by hand.

⚠ CAUTION

Be careful not to burn yourself. The engine oil may be hot.

5. Wipe the engine oil filter sealing surface with a clean rag.

⚠ CAUTION

Be sure to remove any old gasket material remaining on the sealing surface of the engine. Failure to do so could lead to engine failure.

6. Coat the gasket on the new filter with clean engine oil.
7. Screw on the oil filter until a slight resistance is felt, then tighten an additional 2/3 turn.
8. Start the engine and check for leakage around the oil filter. Correct as required.
9. Turn the engine off and wait more than 10 minutes. Check the oil level. Add engine oil if necessary.

5-SPEED AUTOMATIC TRANSMISSION FLUID

When checking or replacement is required, we recommend your INFINITI dealer for servicing.

⚠ CAUTION

- **Use Genuine NISSAN Matic S ATF. If Genuine NISSAN Matic S ATF is not available, Genuine NISSAN Matic J ATF may also be used.**
- **Using automatic transmission fluid other than Genuine NISSAN Matic S ATF or Matic J ATF will cause deterioration in driveability and automatic transmission durability, and may damage the automatic transmission, which is not covered by the INFINITI new vehicle limited warranty.**

The specified automatic transmission fluid is also described on caution labels located in the engine compartment.

POWER STEERING FLUID

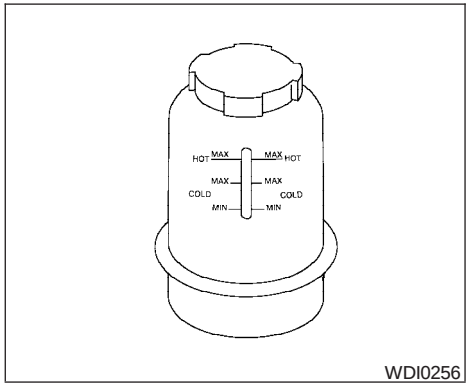

The fluid level should be checked using the HOT MAX range on the power steering fluid reservoir at fluid temperatures of 122° - 176°F (50° - 80°C) or using the COLD MAX range on the power steering fluid reservoir at fluid temperatures of 32° - 86°F (0° - 30°C).

If the fluid is below the MIN line, add Genuine NISSAN PSF. Remove the cap and fill through the opening.

⚠ CAUTION

- **DO NOT OVERFILL.**
- **Recommended fluid is Genuine NISSAN PSF or equivalent.**

BRAKE FLUID

For further brake fluid specification information, refer to “Capacities and recommended fuel/lubricants” in the “Technical and consumer information” section of this manual.

⚠ WARNING

- **Use only new fluid from a sealed container. Old, inferior or contaminated fluid may damage the brake system. The use of improper fluids can damage the brake system and affect the vehicle’s stopping ability.**
- **Clean the filler cap before removing.**
- **Brake fluid is poisonous and should be stored carefully in marked containers out of reach of children.**

⚠ CAUTION

Do not spill the fluid on any painted surfaces. This will damage the paint. If fluid is spilled, immediately wash the surface with water.

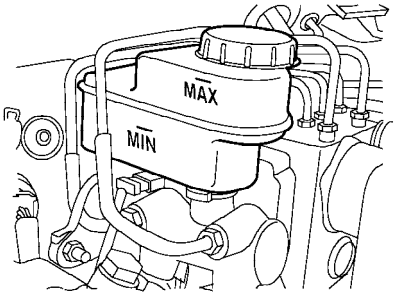

LDI0374

BRAKE FLUID

Check the brake fluid level in the reservoir. If the fluid level is below the MIN line or the brake warning light comes on, add Genuine NISSAN Super Heavy Duty Brake Fluid or equivalent **DOT 3** fluid up to the MAX line. If fluid must be added frequently, the system should be checked by an INFINITI dealer.

WINDOW WASHER FLUID

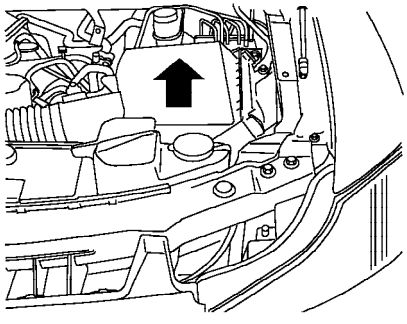
WDI0414

WINDOW WASHER FLUID RESERVOIR

Fill the window washer fluid reservoir periodically. Add window washer fluid when the low window washer fluid warning light comes on.

To fill the window washer fluid reservoir, lift the cap off the reservoir tank and pour the window washer fluid into the tank opening.

Add a washer solvent to the washer for better cleaning. In the winter season, add a windshield washer antifreeze. Follow the manufacturer’s instructions for the mixture ratio.

Refill the reservoir more frequently when driving conditions require an increased amount of window washer fluid.

Recommended fluid is Genuine NISSAN Windshield Washer Concentrate Cleaner & Anti-freeze or equivalent.

⚠ CAUTION

- **Do not substitute engine anti-freeze coolant for window washer solution. This may result in damage to the paint.**
- **Do not fill the window washer reservoir tank with washer fluid concentrates at full strength. Some methyl alcohol based washer fluid concentrates may permanently stain the grille if spilled while filling the window washer reservoir tank.**
- **Pre-mix washer fluid concentrates with water to the manufacturer's recommended levels before pouring the fluid into the window washer reservoir tank. Do not use the window washer reservoir tank to mix the washer fluid concentrate and water.**

- Keep the battery surface clean and dry. Clean the battery with a solution of baking soda and water.
- Make certain the terminal connections are clean and securely tightened.
- If the vehicle is not to be used for 30 days or longer, disconnect the negative (-) battery terminal cable to prevent discharge.

⚠ WARNING

- **Do not expose the battery to flames or electrical sparks. Hydrogen gas generated by the battery is explosive. Do not allow battery fluid to contact your skin, eyes, fabrics or painted surfaces. After touching a battery or battery cap, do not touch or rub your eyes. Thoroughly wash your hands. If the acid contacts your eyes, skin or clothing, immediately flush with water for at least 15 minutes and seek medical attention.**
- **Do not operate the vehicle if the fluid in the battery is low. Low battery fluid can cause a higher load on the battery which can generate heat, reduce battery life, and in some cases lead to an explosion.**
- **When working on or near a battery, always wear suitable eye protection and remove all jewelry.**
- **Battery posts, terminals and related accessories contain lead and lead compounds. Wash hands after handling.**
- **Keep battery out of the reach of children.**

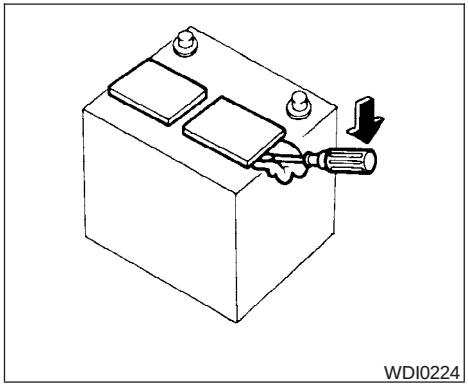

1. Remove the battery caps with a screwdriver as shown. Use a cloth to protect the battery case.

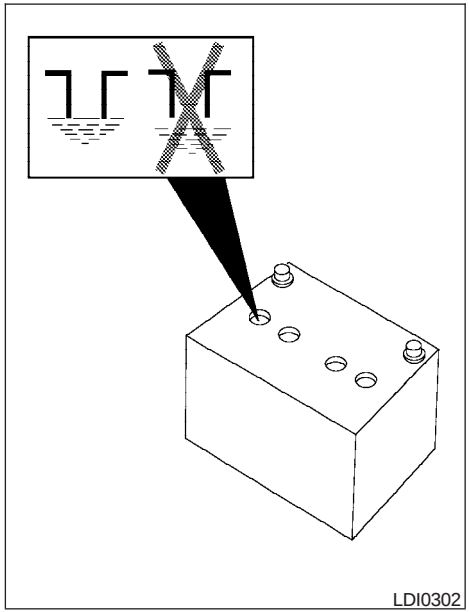

2. Check the fluid level in each cell. If it is necessary to add fluid, add only distilled water to bring the level up to the bottom of the filler opening. **Do not overfill.**

Vehicles operated in high temperatures or under severe conditions require frequent checks of the battery fluid level.

JUMP STARTING

If jump starting is necessary, see “Jump starting” in the “In case of emergency” section of this manual. If the engine does not start by jump starting, the battery may have to be replaced. Contact an INFINITI dealer.

VARIABLE VOLTAGE CONTROL SYSTEM

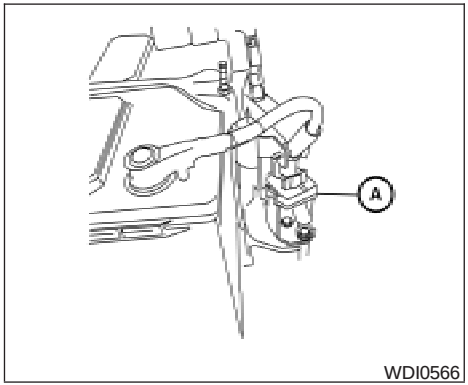

⚠ CAUTION

- **Do not ground accessories directly to the battery terminal. Doing so will bypass the variable voltage control system and the vehicle battery may not charge completely.**
- **Use electrical accessories with the engine running to avoid discharging the vehicle battery.**

Your vehicle is equipped with a variable voltage control system. This system measures the amount of electrical discharge from the battery and controls voltage generated by the generator.

The current sensor Ⓐ is located near the battery along the negative battery cable. If you add electrical accessories to your vehicle, be sure to ground them to a suitable body ground such as the frame or engine block area.

DRIVE BELT

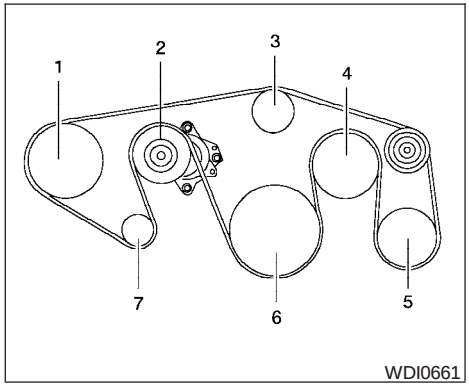

1. Power steering fluid pump
2. Automatic belt tensioner
3. Water pump
4. Cooling fan
5. Air conditioner
6. Crankshaft
7. Generator

⚠ WARNING

Be sure the ignition key is in the OFF or LOCK position before servicing drive belt. The engine could rotate unexpectedly.

1. Visually inspect the belt for signs of unusual wear, cuts, fraying or looseness. If the belt is in poor condition or is loose, have it replaced or adjusted by an INFINITI dealer.
2. Have the belt checked regularly for condition and tension in accordance with the maintenance schedule found in your “INFINITI Service and Maintenance Guide”.

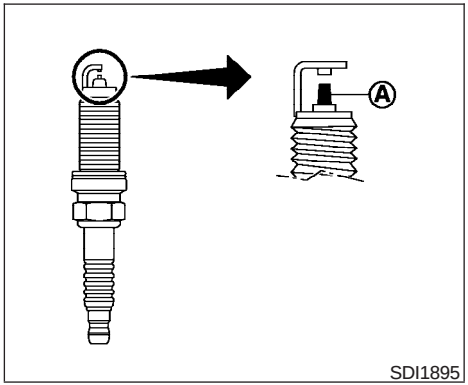

REPLACING SPARK PLUGS

Iridium-tipped spark plugs

It is not necessary to replace iridium-tipped Ⓐ spark plugs as frequently as conventional type spark plugs because they last much longer. Follow the maintenance log shown in the “INFINITI Service and Maintenance Guide”. Do not service iridium-tipped spark plugs by cleaning or regapping.

- **Always replace spark plugs with recommended or equivalent ones.**

⚠ WARNING

Be sure the engine and ignition switch are off and that the parking brake is engaged securely.

⚠ CAUTION

Be sure to use the correct socket to remove the spark plugs. An incorrect socket can damage the spark plugs.

If replacement is required, see your INFINITI dealer for assistance.

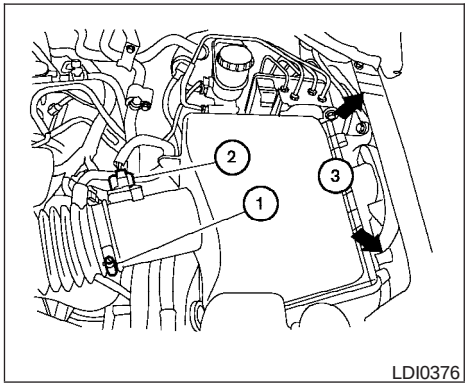

LDI0376

The air cleaner filter should not be cleaned and reused. Replace it according to the maintenance log shown in your “INFINITI Service and Maintenance Guide.” When replacing the filter, wipe the inside of the air cleaner filter housing and the cover with a damp cloth.

To remove the air cleaner filter:

① Loosen the screw.

② Disconnect the electrical connector.

③ Push down on the clips and remove the air cleaner cover. Remove the air cleaner filter.

⚠ WARNING

- **Operating the engine with the air cleaner removed can cause you or others to be burned. The air cleaner not only cleans the air, it stops the flame if the engine backfires. If it isn’t there, and the engine backfires, you could be burned. Do not drive with the air cleaner removed, and be careful when working on the engine with the air cleaner removed.**
- **Never pour fuel into the throttle body or attempt to start the engine with the air cleaner removed. Doing so could result in serious injury.**

IN-CABIN MICROFILTER

The in-cabin microfilter restricts the entry of airborne dust and pollen particles and reduces some objectionable outside odors. The filter is located behind the glove box. Refer to the “INFINITI Service and Maintenance Guide” for change intervals.

To replace the filter, perform the following procedure:

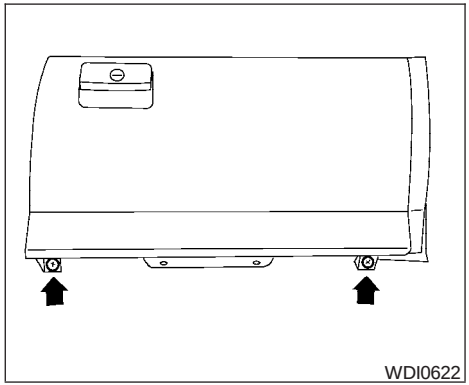
WDI0622

1. Remove the 2 lower glove box screws.

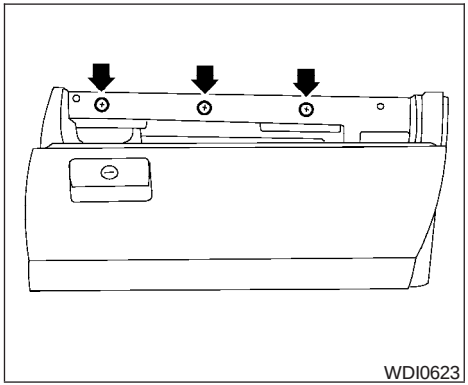

2. Open the glove box, then remove the three upper glove box screws. Remove the glove box assembly from the instrument panel to access the in-cabin microfilter cover.

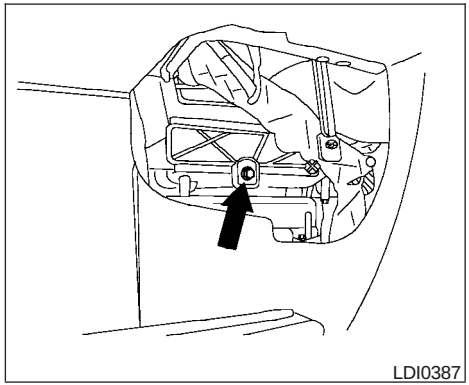

3. Remove the filter cover bolt and remove the filter cover.

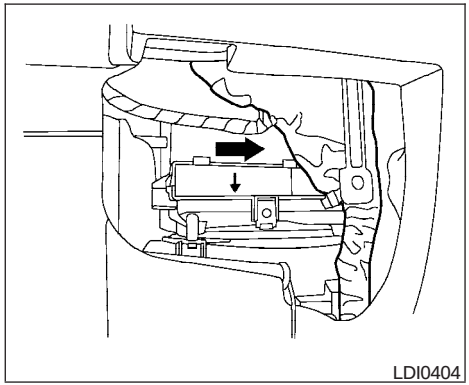

NOTE:

The filters are marked with air flow arrows. The end of the filter with the arrow should face the rear of the vehicle. The arrows should face downward.

4. Insert the first filter into the housing and slide it over to the right. Insert the second filter into the housing.
5. Replace the filter cover.
6. Install the glove box assembly.
7. Fill out the date information on the small replacement label and attach it to the glove box lid.

CLEANING

If your windshield is not clear after using the windshield washer or if a wiper blade chatters when running, wax or other material may be on the blade or windshield.

Clean the outside of the windshield with a washer solution or a mild detergent. Your windshield is clean if beads do not form when rinsing with clear water.

Clean each blade by wiping it with a cloth soaked in a washer solution or a mild detergent. Then rinse the blades with clear water. If your windshield is still not clear after cleaning the blades and using the wiper, replace the blades.

⚠ CAUTION

Worn windshield wiper blades can damage the windshield and impair driver vision.

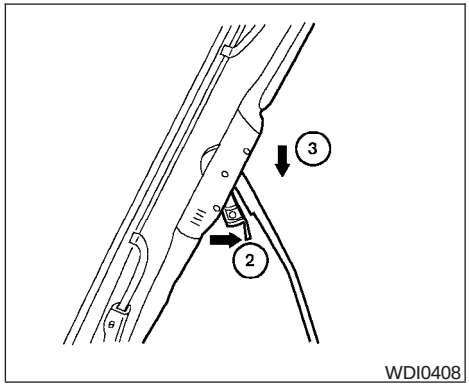

REPLACING

Replace the wiper blades if they are worn.

1. Lift the wiper arm away from the windshield.

② Push the release tab, then move the wiper blade down the wiper arm to remove.

③ Remove the wiper blade.

4. Insert the new wiper blade onto the wiper arm until it clicks into place.
5. Rotate wiper blade so the dimple is in the groove.

⚠ CAUTION

- **After wiper blade replacement, return the wiper arm to its original position; otherwise it may be damaged when the hood is opened.**
- **Make sure the wiper blades contact the glass; otherwise the arms may be damaged from wind pressure.**

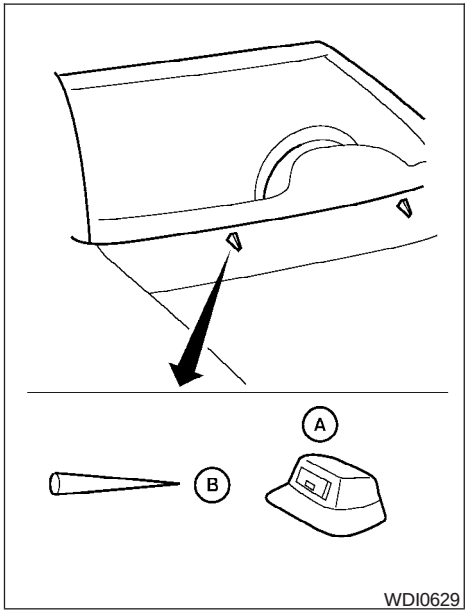

If you wax the surface of the hood, be careful not to let wax get into the washer nozzle Ⓐ. This may cause clogging or improper windshield washer operation. If wax gets into the nozzle, remove it with a needle or small pin Ⓑ.

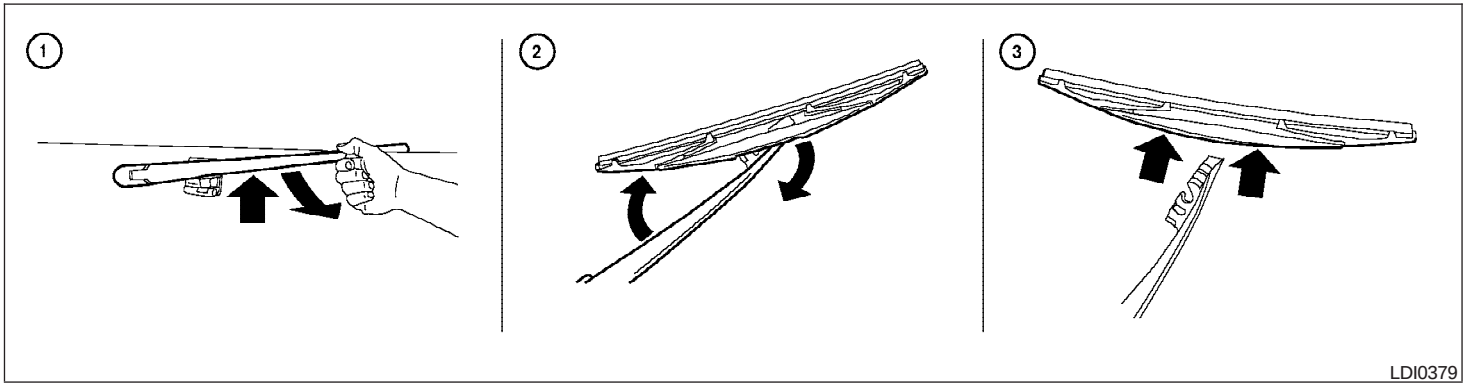

Rear window wiper blade

① Lift the wiper arm away from the rear window.

② Push the wiper blade in and pivot until the blade becomes free.

③ Insert a new blade onto the wiper arm and snap into place.

If the brakes do not operate properly, have the brakes checked by an INFINITI dealer.

Self-adjusting brakes

Your vehicle is equipped with self-adjusting brakes.

The front and rear disc-type brakes self-adjust every time the brake pedal is applied.

⚠ WARNING

See an INFINITI dealer for a brake system check if the brake pedal height does not return to normal.

Brake pad wear indicators

The disc brake pads on your vehicle have audible wear indicators. When a brake pad requires replacement, a high pitched scraping or screeching sound will be heard when the vehicle is in motion. The noise will be heard whether or not the brake pedal is depressed. Have the brakes checked as soon as possible if the wear indicator sound is heard.

Under some driving or climate conditions, occasional brake squeak, squeal or other noise may be heard. Occasional brake noise during light to moderate stops is normal and does not affect the function or performance of the brake system.

Proper brake inspection intervals should be followed. For additional information, see the Maintenance Log section of your "INFINITI Service and Maintenance Guide" booklet for maintenance intervals.

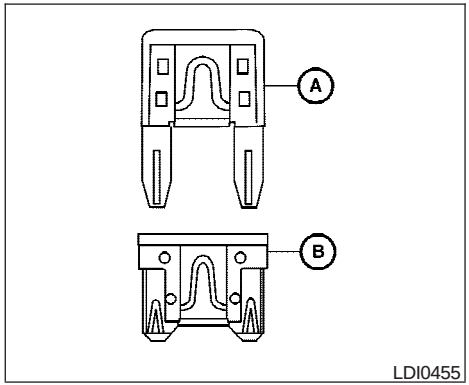

Two types of fuses are used. Type Ⓐ is used in the fuse boxes in the engine compartment. Type Ⓑ is used in the passenger compartment fuse box.

Type A fuses are provided as spare fuses. They are stored in the passenger compartment fuse box.

Type A fuses can be installed in the engine compartment and passenger compartment fuse boxes.

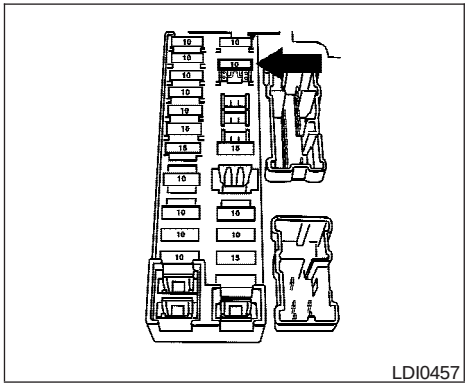

If a type A fuse is used to replace a type B fuse, the type A fuse will not be level with the fuse pocket as shown in the illustration. This will not affect the performance of the fuse. Make sure the fuse is installed in the fuse box securely.

Type B fuses cannot be installed in the underhood fuse boxes. Only use type A fuses in the underhood fuse boxes.

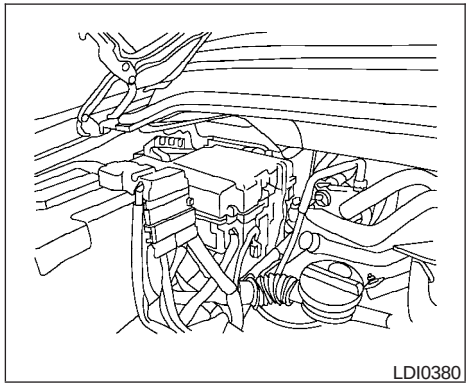

ENGINE COMPARTMENT

⚠ CAUTION

Never use a fuse of a higher or lower amperage rating than specified on the fuse box cover. This could damage the electrical system or cause a fire.

If any electrical equipment does not come on, check for an open fuse.

1. Be sure the ignition switch and the headlight switch are OFF.
2. Open the engine hood.
3. Remove the fuse box cover by pushing the tab and lifting the cover up.
4. Remove the fuse with the fuse puller. The fuse puller is located in the center of the fuse block in the passenger compartment.

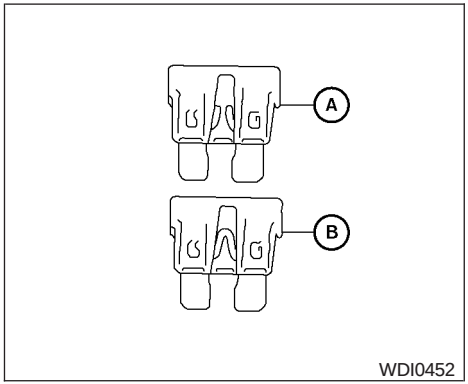

Type A

5. If the fuse is open Ⓐ, replace it with a new fuse Ⓑ.
6. If a new fuse also opens, have the electrical system checked and repaired by an INFINITI dealer.

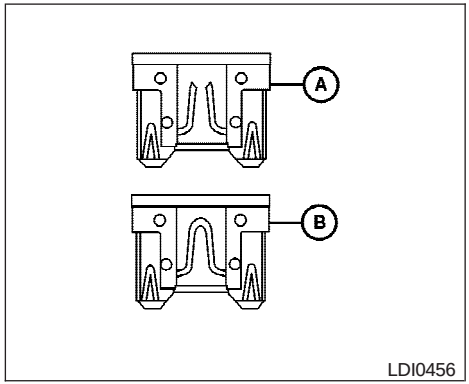

Type B

Fusible links

If the electrical equipment does not operate and fuses are in good condition, check the fusible links. If any of these fusible links are melted, replace with only genuine NISSAN parts.

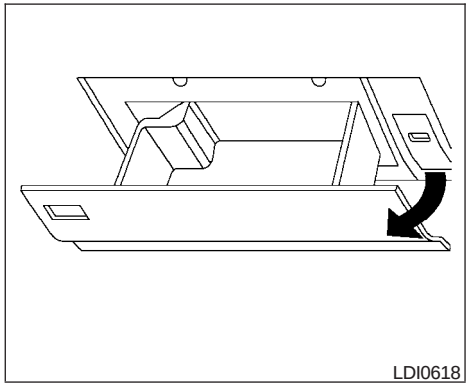

PASSENGER COMPARTMENT

⚠ CAUTION

Never use a fuse of a higher or lower amperage rating than specified on the fuse box cover. This could damage the electrical system or cause a fire.

If any electrical equipment does not operate, check for an open fuse.

1. Be sure the ignition switch and the headlight switch are OFF.
2. Open the glove box to access the fuse box cover.

3. Pull the fuse box cover to remove.
4. Remove the fuse with the fuse puller.
5. If the fuse is open, replace it with an equivalent good fuse.
6. Push the fuse box cover to install.
7. If a new fuse also opens, have the electrical system checked and repaired by an INFINITI dealer.

⚠ CAUTION

Be careful not to allow children to swallow the battery and removed parts.

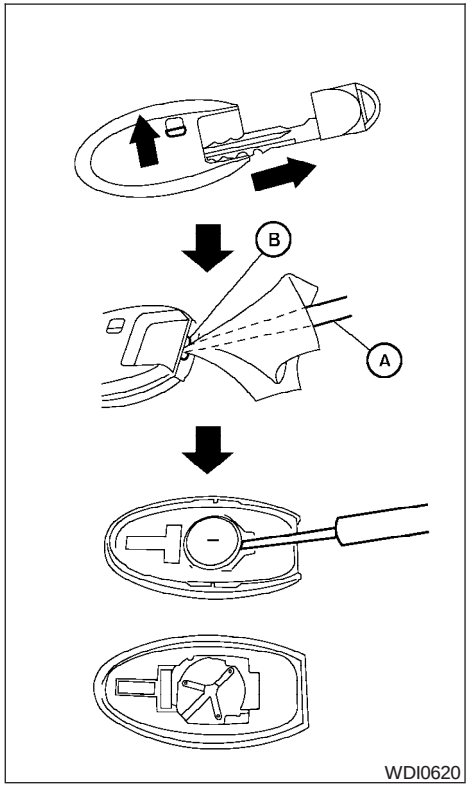

INTELLIGENT KEY

Replace the battery in the Intelligent Key as follows:

1. Remove the mechanical key from the Intelligent Key.
2. Insert a small screwdriver Ⓐ into the slit Ⓑ of the corner and twist it to separate the upper part from the lower part. Use a cloth to protect the casing.
3. Replace the battery with a new one.

   Recommended battery: CR2025 or equivalent.

   - Do not touch the internal circuit and electric terminals as doing so could cause a malfunction.
   - Hold the battery by the edges. Holding the battery across the contact points will seriously deplete the storage capacity.
   - Make sure that the + side faces the bottom of the case.

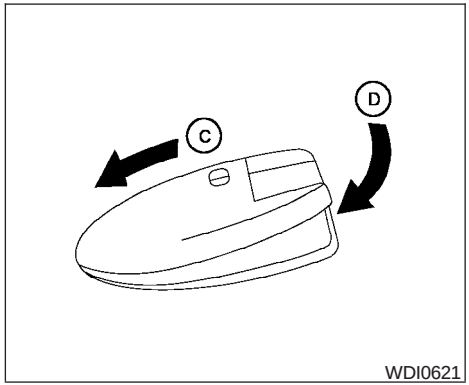

4. Close the lid securely as illustrated Ⓒ Ⓓ.
5. Operate the buttons to check the operation.

See an INFINITI dealer if you need assistance for replacement.

FCC Notice:
Changes or modifications not expressly approved by the party responsible for compliance could void the user's authority to operate the equipment.

This device complies with Part 15 of the FCC Rules and RSS-210 of Industry Canada.

Operation is subject to the following two conditions: (1) This device may not cause harmful interference, and (2) this device must accept any interference received, including interference that may cause undesired operation of the device.

HEADLIGHTS

Replacing the xenon headlight bulb (Low-beam)

If replacement is required, see an INFINITI dealer.

WARNING

HIGH VOLTAGE

When xenon headlights are on, they produce a high voltage. To prevent an electric shock, never attempt to modify or disassemble. Always have your xenon headlights replaced at an INFINITI dealer. For additional information, see "Headlight and turn signal switch" in the "Instruments and controls" section.

Replacing the halogen headlight bulb (High-beam)

The headlight is a semi-sealed beam type which uses a replaceable headlight (halogen) bulb. Because the headlight assembly must be removed from the vehicle for bulb replacement, see your INFINITI dealer.

CAUTION

- **High pressure halogen gas is sealed inside the halogen bulb. The bulb may break if the glass envelope is scratched or the bulb is dropped.**
- **When handling the bulb, do not touch the glass envelope.**
- **DO NOT TOUCH THE BULB WITH BARE HANDS.**
- **Use the same number and wattage as originally installed:**

  Low beam:
  Wattage: 35
  Bulb no.: D2R*

  High beam:
  Wattage: 60
  Bulb no.: 9005*

  ***: Always check with the Parts Department at an INFINITI dealer for the latest parts information.**
- **Do not leave the bulb out of the headlight reflector for a long period of time as dust, moisture and smoke may enter the headlight body and affect the performance of the headlight.**
- **Aiming is not necessary after replacing the bulb. When aiming adjustment is necessary, contact an INFINITI dealer.**

Fog may temporarily form inside the lens of the exterior lights in the rain or in a car wash. A temperature difference between the inside and the outside of the lens causes the fog. This is not a malfunction. If large drops of water collect inside the lens, contact an INFINITI dealer.

EXTERIOR AND INTERIOR LIGHTS

Item	Wattage (W)	Bulb No.
Headlight assembly*		
High	60/65	HB3/9005
Low	35	D2R
Park	7	3057K & 916
Sidemarker	7	916
Front fog light*	55	H3
Turn*	21	7440
Puddle light	8	906
Side turn signal light*	(LED)	—
Room/map lights	8	—
Personal lights	6	WXW5Z
Footwell*	3.4	158
Glove box light*	3.4	158
Vanity mirror light	1.32	—
Step light	3.8	194
Cargo light	8	AL67
High-mounted stop light*	(LED)	—
Rear combination light		
Tail/Stop*	(LED)	—
Backup (reversing)*	—	—
Turn	27	3156K
License plate light*	—	—

* See an INFINITI dealer for replacement.

Always check with the Parts Department at an INFINITI dealer for the latest parts information.

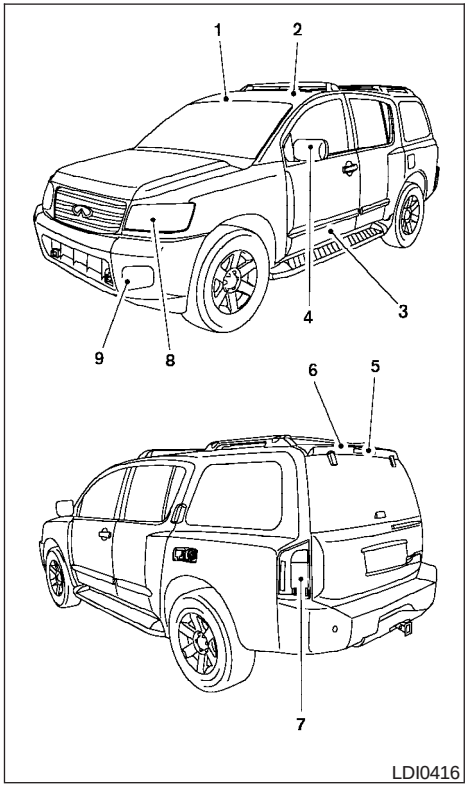

1. Room/map light
2. Front personal lights
3. Step light
4. Puddle light/Side turn signal light
5. High-mount stoplight
6. Cargo light
7. Rear turn signal light
8. Headlight assembly
9. Fog light

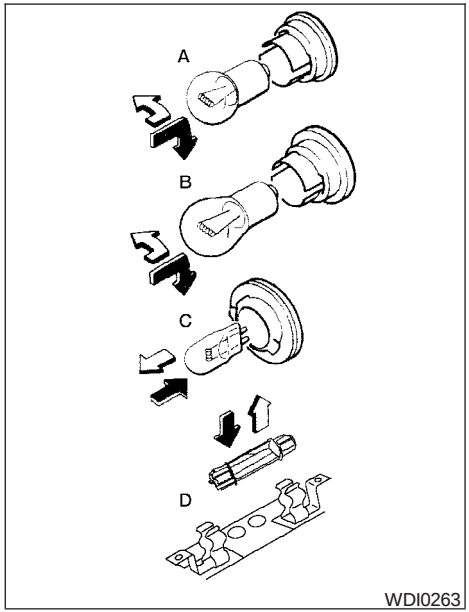

Replacement procedures

All other lights are either type A, B, C or D. When replacing a bulb, first remove the lens, lamp and/or cover.

⇧ Indicates bulb removal

⬆ Indicates bulb installation

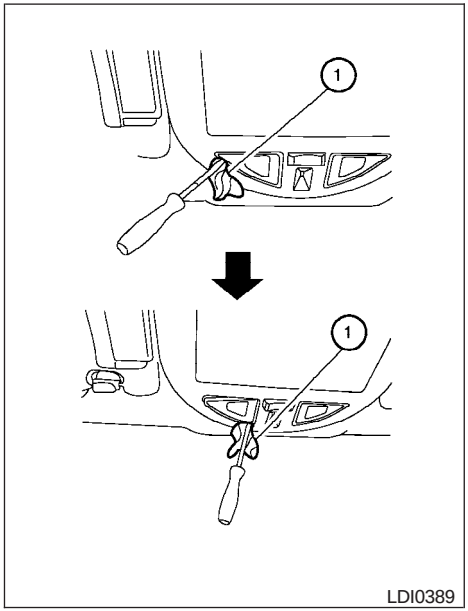

Room/map lights

Use a cloth ① to protect the housing.

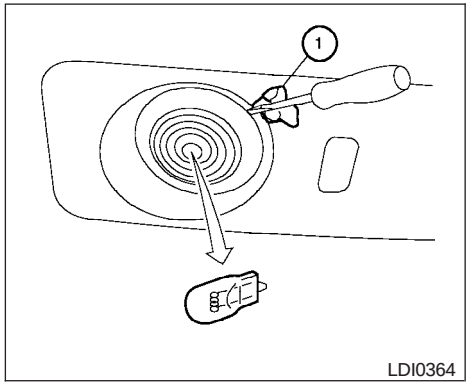

Personal lights

Use a cloth ① to protect the housing.

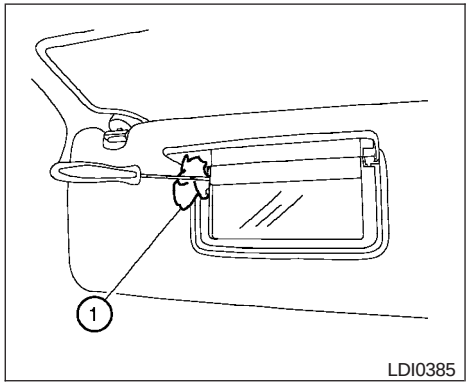

Vanity mirror

Use a cloth ① to protect the housing.

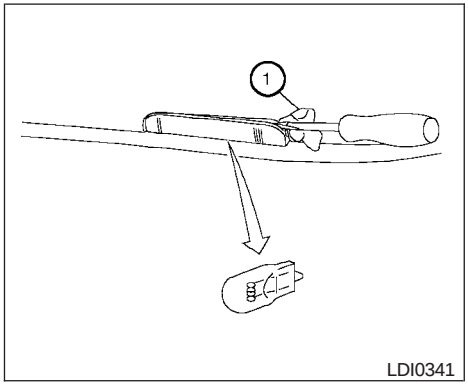

Step light

Use a cloth ① to protect the housing.

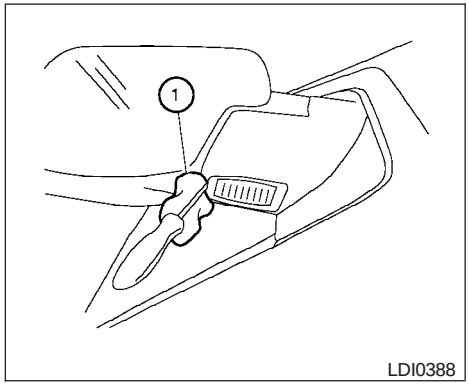

Puddle light

Use a cloth ① to protect the housing.

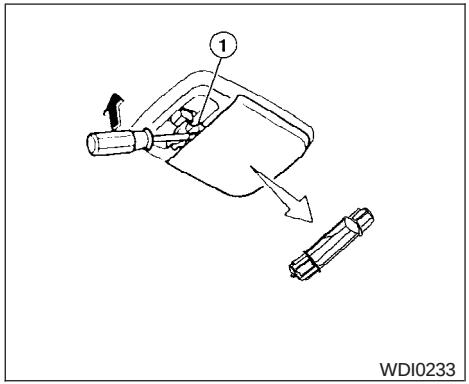

Cargo light

Use a cloth ① to protect the housing.

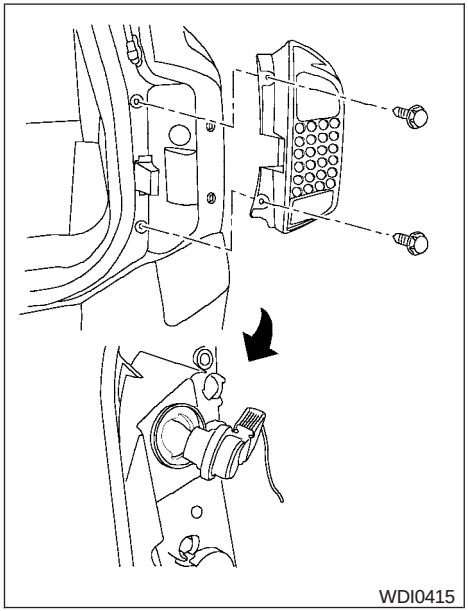

Rear turn signal light

If you have a flat tire, see the "In case of emergency" section of this manual.

TIRE PRESSURE

Tire Pressure Monitoring System (TPMS)

This vehicle is equipped with the Tire Pressure Monitoring System (TPMS). It monitors tire pressure of all tires except the spare. When the low tire pressure warning light is lit, one or more of your tires is significantly under-inflated. The system also displays pressure of all tires (except the spare tire) on the display screen by sending a signal from a sensor that is installed in each wheel.

The TPMS will activate only when the vehicle is driven at speeds above 16 MPH (26 km/h). Also, this system may not detect a sudden drop in tire pressure (for example a flat tire while driving).

For more details, refer to "Low tire pressure warning light" in the "Instruments and controls" section, "Tire pressure information" in the "Monitor, climate, audio, phone and voice recognition systems" section, "Tire Pressure Monitoring System" in the "Starting and driving" section, and "Flat tire" in the "In case of emergency" section.

Tire inflation pressure

Check the tire pressures (including the spare) often and always prior to long distance trips. The recommended tire pressure specifications are shown on the F.M.V.S.S./C.M.V.S.S. certification label or the Tire and Loading Information label under the "Cold Tire Pressure" heading. The Tire and Loading Information label is affixed to the driver side center pillar. Tire pressures should be checked regularly because:

- Most tires naturally lose air over time.
- Tires can lose air suddenly when driven over potholes or other objects or if the vehicle strikes a curb while parking.

The tire pressures should be checked when the tires are cold. The tires are considered COLD after the vehicle has

been parked for 3 or more hours, or driven less than 1 mile (1.6 km) at moderate speeds.

Incorrect tire pressure, including under inflation, may adversely affect tire life and vehicle handling.

⚠WARNING

- **Improperly inflated tires can fail suddenly and cause an accident.**
- **The Gross Vehicle Weight Rating (GVWR) is located on the F.M.V.S.S./C.M.V.S.S. certification label. The vehicle weight capacity is indicated on the Tire and Loading Information label (if so equipped). Do not load your vehicle beyond this capacity. Overloading your vehicle may result in reduced tire life, unsafe operating conditions due to premature tire failure, or unfavorable handling characteristics and could also lead to a serious accident. Loading beyond the specified capacity may also result in failure of other vehicle components.**
- **Before taking a long trip, or whenever you heavily load your vehicle, use a tire pressure gauge to ensure that the tire pressures are at the specified level.**
- **Do not drive your vehicle over 85 MPH (137 km/h) unless it is equipped with high speed rated tires. Driving faster than 85 MPH (137 km/h) may result in tire failure, loss of control and possible injury.**
- **For additional information regarding tires, refer to "Important Tire Safety Information" (US) or "Tire Safety Information" (Canada) in the Warranty Information Booklet.**

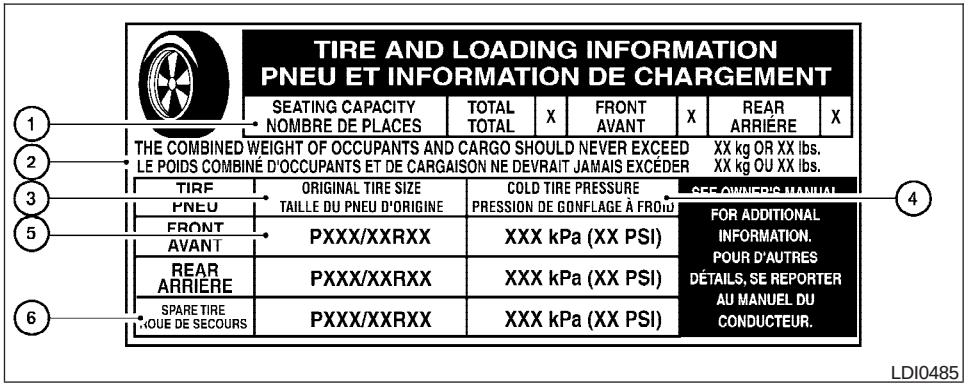

Tire and loading information label

① Seating capacity: The maximum number of occupants that can be seated in the vehicle.

② Vehicle load limit: See loading information in the “Technical and consumer information” section.

③ Original tire size: The size of the tires originally installed on the vehicle at the factory.

④ Cold tire pressure: Inflate the tires to this pressure when the tires are cold. Tires are considered COLD after the vehicle has been parked for 3 or more hours, or driven less than 1 mile (1.6 km) at moderate speeds. The recommended cold tire inflation is set by the manufacturer to provide the best balance of tire wear, vehicle handling, driveability, tire noise, etc., up to the vehicle’s GVWR.

⑤ Tire size – refer to “Tire labeling” later in this section.

⑥ Spare tire size or compact spare tire size (if so equipped).

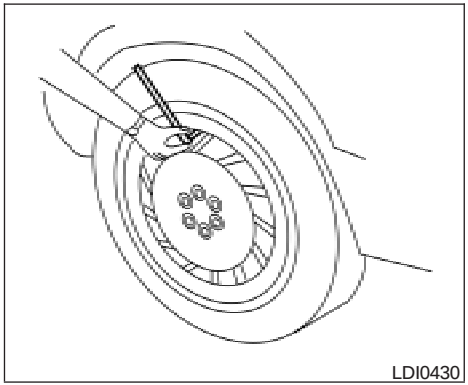

Checking tire pressure

1. Remove the valve stem cap from the tire.
2. Press the pressure gauge squarely onto the valve stem. Do not press too hard or force the valve stem sideways, or air will escape. If the hissing sound of air escaping from the tire is heard while checking the pressure, reposition the gauge to eliminate this leakage.
3. Remove the gauge.
4. Read the tire pressure on the gauge stem and compare to the specification shown on the Tire and Loading Information label.
5. Add air to the tire as needed. If too much air is added, press the core of the valve stem briefly with the tip of the gauge stem to release pressure. Recheck the pressure and add or release air as needed.
6. Install the valve stem cap.
7. Check the pressure of all other tires, including the spare.

Size	Cold Tire Inflation Pressure
Front Original Tire: P275/60R20	240 kPa, 35 PSI
Rear Original Tire: P275/60R20	240 kPa, 35 PSI
Spare Tire: P275/60R20	240 kPa, 35 PSI

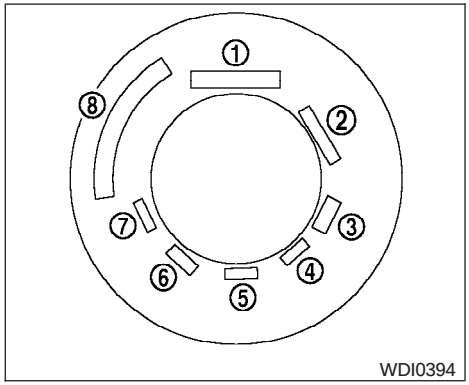

Example

TIRE LABELING

Federal law requires tire manufacturers to place standardized information on the sidewall of all tires. This information identifies and describes the fundamental characteristics of the tire and also provides the tire identification number (TIN) for safety standard certification. The TIN can be used to identify the tire in case of a recall.

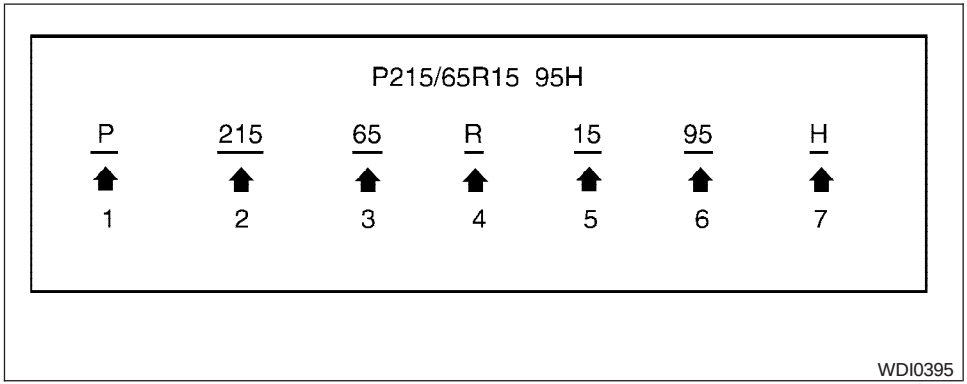

Example

① Tire size (example: P215/65R15 95H)

1. P: The "P" indicates the tire is designed for passenger vehicles (not all tires have this information).
2. Three-digit number (215): This number gives the width in millimeters of the tire from sidewall edge to sidewall edge.
3. Two-digit number (65): This number, known as the aspect ratio, gives the tire's ratio of height to width.
4. R: The "R" stands for radial.
5. Two-digit number (15): This number is the wheel or rim diameter in inches.
6. Two- or three-digit number (95): This number is the tire's load index. It is a measurement of how much weight each tire can support. You may not find this information on all tires because it is not required by law.
7. H: Tire speed rating. You should not drive the vehicle faster than the tire speed rating.

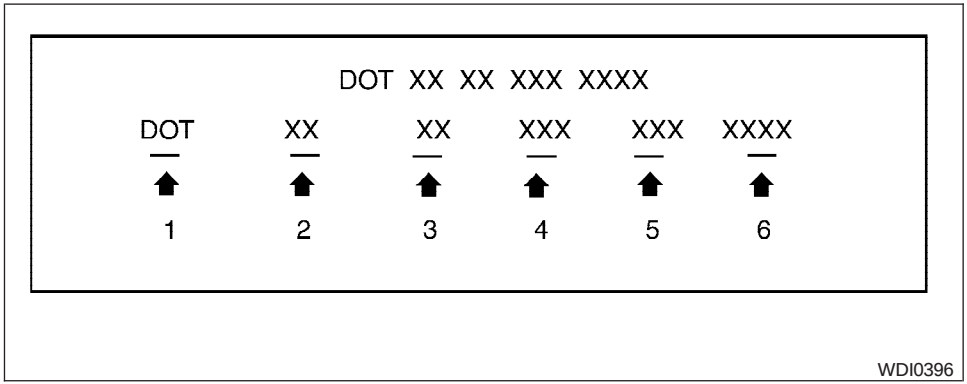

Example

② TIN (Tire Identification Number) for a new tire (example: DOT XX XX XXX XXXX)

1. DOT: Abbreviation for the "Department Of Transportation." The symbol can be placed above, below or to the left or right of Tire Identification Number.
2. Two-digit code: Manufacturer's identification mark
3. Two-digit code: Tire size
4. Three-digit code: Tire type code (Optional)
5. Three-digit code: Date of Manufacture
6. Four numbers represent the week and year the tire was built. For example, the numbers 3103 means the 31st week of 2003. If these numbers are missing, then look on the other sidewall of the tire.

③ Tire ply composition and material

The number of layers or plies of rubber-coated fabric in the tire. Tire manufacturers also must indicate the materials in the tire, which include steel, nylon, polyester, and others.

④ Maximum permissible inflation pressure

This number is the greatest amount of air pressure that should be put in the tire. Do not exceed the maximum permissible inflation pressure.

⑤ Maximum load rating

This number indicates the maximum load in kilograms and pounds that can be carried by the tire. When replacing the tires on the vehicle, always use a tire that has the same load rating as the factory installed tire.

⑥ Term of "tubeless" or "tube type"

Indicates whether the tire requires an inner tube ("tube type") or not ("tubeless").

⑦ The word “radial”

The word “radial” is shown if the tire has radial structure.

⑧ Manufacturer or brand name

Manufacturer or brand name is shown.

Other Tire-related Terminology

In addition to the many terms that are defined throughout this section, Intended Outboard Sidewall is (1) the sidewall that contains a whitewall, bears white lettering or bears manufacturer, brand, and/or model name molding that is higher or deeper than the same molding on the other sidewall of the tire, or (2) the outward facing sidewall of an asymmetrical tire that has a particular side that must always face outward when mounted on a vehicle.

TYPES OF TIRES

⚠ WARNING

- **When changing or replacing tires, be sure all four tires are of the same type (i.e., Summer, All Season or Snow) and construction. An INFINITI dealer may be able to help you with information about tire type, size, speed rating and availability.**
- **Replacement tires may have a lower speed rating than the factory equipped tires, and may not match the potential maximum vehicle speed. Never exceed the maximum speed rating of the tire.**
- **Replacing tires with those not originally specified by INFINITI could affect the proper operation of the low tire pressure warning system.**
- **For additional information regarding tires, refer to “Important Tire Safety Information” (US) or “Tire Safety Information” (Canada) in the Warranty Information Booklet.**

All season tires

INFINITI specifies All Season tires on some models to provide good performance all year, including snowy and icy road conditions. All Season tires are identified by ALL SEASON and/or M&S on the tire sidewall. Snow tires have better snow traction than All Season tires and may be more appropriate in some areas.

Summer tires

INFINITI specifies summer tires on some models to provide superior performance on dry roads. Summer tire performance is substantially reduced in snow and ice. Summer tires do not have the tire traction rating “M&S” on the tire sidewall.

If you plan to operate your vehicle in snowy or icy conditions, INFINITI recommends the use of SNOW tires or ALL SEASON tires on all four wheels.

Snow tires

If snow tires are needed, it is necessary to select tires equivalent in size and load rating to the original equipment tires. If you do not, it can adversely affect the safety and handling of your vehicle.

Generally, snow tires have lower speed ratings than factory equipped tires and may not match the potential maximum vehicle speed. Never exceed the maximum speed rating of the tire.

If you install snow tires, they must be the same size, brand, construction and tread pattern on all four wheels.

For additional traction on icy roads, studded tires may be used. However, some U.S. states and Canadian provinces prohibit their use. Check local, state and provincial laws before installing studded tires. Skid and traction capabilities of studded snow tires on wet or dry surfaces may be poorer than that of non-studded snow tires.

TIRE CHAINS

⚠ CAUTION

Tire chains/cables should not be installed on P275/60R20 size tires. Installation of the tire chains/cables on P275/60R20 size tires will cause damage to the vehicle. If you plan to use tire chains/cables, you should install P265/70R18 size tires on your vehicle.

Use of tire chains may be prohibited according to location. Check the local laws before installing tire chains. When installing tire chains, make sure they are the proper size for the tires on your vehicle and are installed according to the chain manufacturer's suggestions. **Use only SAE class "S" chains.** Class "S" chains are used on vehicles with restricted tire to vehicle clearance. Vehicles that can use Class "S" chains are designed to meet the minimum clearances between the tire and the closest vehicle suspension or body component required to accommodate the use of a winter traction device (tire chains or cables). The minimum clearances are determined using the factory equipped tire size. Other types may damage your vehicle. Use chain tensioners when recommended by the tire chain manufacturer to ensure a tight fit. Loose end links of the tire chain must be secured or removed to prevent the possibility of whipping action damage to the fenders or underbody. If possible, avoid fully loading your vehicle when using tire chains. In addition, drive at a reduced speed. Otherwise, your vehicle may be damaged and/or vehicle handling and performance may be adversely affected.

Tire chains must be installed only on the rear wheels and not on the front wheels.

Do not use tire chains on dry roads. Driving with chains in such conditions can cause damage to the various mechanisms of the vehicle due to some overstress.

Use only the 2WD range when driving on clear paved roads.

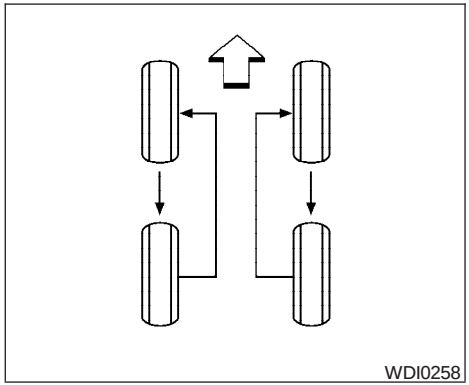

CHANGING WHEELS AND TIRES

Tire rotation

INFINITI recommends rotating the tires every 7,500 miles (12,000 km).

See "Flat tire" in the "In case of emergency" section in this manual for tire replacing procedures.

As soon as possible, tighten the wheel nuts to the specified torque with a torque wrench.

Wheel nut tightening torque:

98 ft-lb (133 N·m)

The wheel nuts must be kept tightened to specifications at all times. It is recommended that wheel nuts be tightened to specification at each tire rotation interval.

⚠ WARNING

- **After rotating the tires, check and adjust the tire pressure.**
- **Retighten the wheel nuts when the vehicle has been driven for 600 miles (1,000 km) (also in cases of a flat tire, etc.).**
- **Do not include the spare tire in the tire rotation.**
- **For additional information regarding tires, refer to "Important Tire Safety Information" (US) or "Tire Safety Information" (Canada) in the Warranty Information Booklet.**

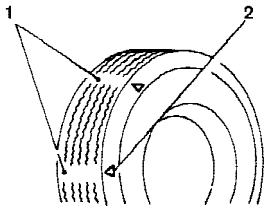

WDI0259

1. Wear indicator
2. Location mark

Tire wear and damage

⚠ WARNING

- **Tires should be periodically inspected for wear, cracking, bulging or objects caught in the tread. If excessive wear, cracks, bulging or deep cuts are found, the tire(s) should be replaced.**
- **The original tires have built-in tread wear indicators. When the wear indicators are visible, the tire(s) should be replaced.**
- **Tires degrade with age and use. Have tires, including the spare, over 6 years old checked by a qualified technician because some tire damage may not be obvious. Replace the tires as necessary to prevent tire failure and possible personal injury.**
- **Improper service of the spare tire may result in serious personal injury. If it is necessary to repair the spare tire, contact an INFINITI dealer.**
- **For additional information regarding tires, refer to "Important Tire Safety Information" (US) or "Tire Safety Information" (Canada) in the Warranty Information Booklet.**

Replacing wheels and tires

When replacing a tire, use the same size, tread design, speed rating and load carrying capacity as originally equipped. Recommended types and sizes are shown in “Wheels and tires” in the “Technical and consumer information” section of this manual.

WARNING

- **The use of tires other than those recommended or the mixed use of tires of different brands, construction (bias, bias-belted or radial), or tread patterns can adversely affect the ride, braking, handling, ground clearance, body-to-tire clearance, tire chain clearance, speedometer calibration, headlight aim and bumper height. Some of these effects may lead to accidents and could result in serious personal injury.**
- **If the wheels are changed for any reason, always replace with wheels which have the same off-set dimension. Wheels of a different off-set could cause premature tire wear, degrade vehicle handling characteristics and/or interference with the brake discs/drums. Such interference can lead to decreased braking efficiency and/or early brake pad/shoe wear. Refer to “Wheels and tires” in the “Technical and consumer information” section of this manual for wheel off-set dimensions.**
- **When a spare tire is mounted or a wheel is replaced, tire pressure will not be indicated, the TPMS will not function and the low tire pressure warning light will flash for approximately 1 minute. The light will remain on after 1 minute. Contact your INFINITI dealer as soon as possible for tire replacement and/or system resetting.**
- **Replacing tires with those not originally specified by INFINITI could affect the proper operation of the TPMS.**
- **Do not install a damaged or deformed wheel or tire even if it has been repaired. Such wheels or tires could have structural damage and could fail without warning.**
- **The use of retread tires is not recommended.**
- **For additional information regarding tires, refer to “Important Tire Safety Information” (US) or “Tire Safety Information” (Canada) in the Warranty Information Booklet.**

4x4 Four-wheel drive models

CAUTION

Always use tires of the same type, size, brand, construction (bias, bias-belted or radial), and tread pattern on all four wheels. Failure to do so may result in a circumference difference between tires on the front and rear axles which will cause excessive tire wear and may damage the transmission, transfer case and differential gears.

If excessive tire wear is found, it is recommended that all four tires be replaced with tires of the same size, brand, construction and tread pattern. The tire pressure and wheel alignment should also be checked and corrected as necessary. Contact an INFINITI dealer.

Wheel balance

Unbalanced wheels may affect vehicle handling and tire life. Even with regular use, wheels can get out of balance. Therefore, they should be balanced as required.

Wheel balance service should be performed with the wheels off the vehicle. Spin balancing the wheels on the vehicle could lead to mechanical damage.

- **For additional information regarding tires, refer to "Important Tire Safety Information" (US) or "Tire Safety Information" (Canada) in the Warranty Information Booklet .**

Care of wheels

- Wash the wheels when washing the vehicle to maintain their appearance.
- Clean the inner side of the wheels when the wheel is changed or the underside of the vehicle is washed.
- Do not use abrasive cleaners when washing the wheels.
- Inspect wheel rims regularly for dents or corrosion. Such damage may cause loss of pressure or poor seal at the tire bead.
- INFINITI recommends waxing the road wheels to protect against road salt in areas where it is used during winter.

9 Technical and consumer information

Capacities and recommended fuel/lubricants 9-2
Fuel recommendation 9-3
Engine oil and oil filter recommendations 9-5
Air conditioner system refrigerant and oil recommendations 9-6
Specifications 9-7
Engine 9-7
Wheels and tires 9-8
Dimensions and weights 9-8
When traveling or registering your vehicle in another country 9-9
Vehicle identification 9-9
Vehicle identification number (VIN) plate 9-9
Vehicle identification number (chassis number) 9-9
Engine serial number 9-10
F.M.V.S.S./C.M.V.S.S. certification label 9-10
Emission control information label 9-10
Tire and loading information label 9-11
Air conditioner specification label 9-11
Installing front license plate 9-11
Vehicle loading information 9-12
Terms 9-12
Vehicle load capacity 9-12
Securing the load 9-14
Loading tips 9-15
Measurement of weights 9-15
Towing a trailer 9-16
Maximum load limits 9-16
Towing load/specification 9-19
Towing safety 9-20
Flat towing 9-28
Snow plow 9-28
Uniform tire quality grading 9-29
Emission control system warranty 9-30
Reporting safety defects (US only) 9-30
Readiness for inspection/maintenance (I/M) test 9-31
Event Data Recorders (EDR) 9-32
Owner's Manual/Service Manual order information . . . 9-32
In the event of a collision 9-33

CAPACITIES AND RECOMMENDED FUEL/LUBRICANTS

The following are approximate capacities. The actual refill capacities may be slightly different. When refilling, follow the procedure described in the "Maintenance and do-it-yourself" section to determine the proper refill capacity.

	Capacity (Approximate)			Recommended Fluids and Lubricants
	US measure	Imp measure	Liter	
Fuel	28 gal	23-1/4 gal	105.8	Unleaded gasoline with an octane rating of at least 87 AKI (RON 91)*1
Engine oil *7				
Drain and Refill				
With oil filter change	6-4/5 qt	5-3/4 qt	6.5	▪ Engine oil with API Certification Mark *2 ▪ Viscosity SAE 5W-30 *2
Without oil filter change	6-1/2 qt	5-1/2 qt	6.2	
Cooling system				
With reservoir	3-3/4 gal	3-1/8 gal	14.4	50% Genuine NISSAN Long Life Antifreeze/Coolant or equivalent 50% Demineralized or distilled water
Automatic transmission fluid	Refill to the proper level according to the instructions in the "Maintenance and do-it-yourself" section.			Genuine NISSAN Matic S ATF *3
Power steering fluid (PSF)				Genuine NISSAN PSF or equivalent.*4
Brake fluid				Genuine NISSAN Super Heavy Duty Brake Fluid *5 or equivalent DOT 3
Multi-purpose grease	—	—	—	NLGI No. 2 (Lithium Soap base)
Air conditioning system refrigerant	—	—	—	HFC-134a (R-134a) *6
Air conditioning system oil	—	—	—	NISSAN A/C System Oil Type S or equivalent *6
Transfer fluid	—	—	—	Genuine NISSAN Matic D ATF (Continental U.S. and Alaska) or Canada NISSAN Automatic Transmission Fluid or equivalent (if available)
Front final drive oil	—	—	—	Genuine NISSAN Differential Oil Hypoid Super GL-5 80W-90 OR API GL-5 Viscosity SAE 80W-90 *8
Rear final drive oil	—	—	—	API GL-5 Synthetic 75W-90 gear oil or equivalent *9
Windshield washer fluid (shared between front and rear wipers)	1-1/4 gal	1 gal	4.5	Genuine NISSAN Windshield Washer Concentrate Cleaner & Antifreeze or equivalent

*1: For further details, see "Fuel recommendation."
*2: For further details, see "Engine oil and oil filter recommendations."
*3: If Genuine NISSAN Matic S ATF is not available, Genuine NISSAN Matic J ATF may also be used. Using automatic transmission fluid other than Genuine NISSAN Matic S ATF or Matic J ATF will cause deterioration in driveability and automatic transmission durability, and may damage the automatic transmission, which is not covered by the NISSAN new vehicle limited warranty.
*4: DEXRON™ VI type ATF or Canada NISSAN Automatic Transmission Fluid may also be used.
*5: Available in mainland USA through your INFINITI dealer.
*6: For further details, see "Air conditioner specification label."
*7: For further details, see "Changing engine oil."
*8: For hot climates, viscosity SAE 90 is suitable for ambient temperatures above 0° C (32° F).
*9: See your INFINITI dealer for service.

FUEL RECOMMENDATION

INFINITI recommends the use of premium unleaded gasoline with an octane rating of at least 91 AKI (Anti-Knock Index) number (Research octane number 96). If unleaded premium gasoline is not available, you may use unleaded regular gasoline with an octane rating of at least 87 AKI number (Research octane number 91), but you may notice a decrease in performance.

⚠ CAUTION

- **Using a fuel other than that specified could adversely affect the emission control system, and may also affect the warranty coverage.**
- **Under no circumstances should a leaded gasoline be used, because this will damage the three-way catalyst.**
- **Do not use E-85 fuel in your vehicle. Your vehicle is not designed to run on E-85 fuel. Using E-85 fuel can damage the fuel system components and is not covered by the INFINITI vehicle limited warranty.**

Gasoline specifications

INFINITI recommends using gasoline that meets the World-Wide Fuel Charter (WWFC) specifications where it is available. Many of the automobile manufacturers developed this specification to improve emission control system and vehicle performance. Ask your service station manager if the gasoline meets the WWFC specifications.

Reformulated gasoline

Some fuel suppliers are now producing reformulated gasolines. These gasolines are specially designed to reduce vehicle emissions. INFINITI supports efforts towards cleaner air and suggests that you use reformulated gasoline when available.

Gasoline containing oxygenates

Some fuel suppliers sell gasoline containing oxygenates such as ethanol, MTBE and methanol with or without advertising their presence. INFINITI does not recommend the use of fuels of which the oxygenate content and the fuel compatibility for your INFINITI cannot be readily determined. If in doubt, ask your service station manager.

If you use oxygenate-blend gasoline, please take the following precautions as the usage of such fuels may cause vehicle performance problems and/or fuel system damage.

- **The fuel should be unleaded and have an octane rating no lower than that recommended for unleaded gasoline.**
- **If an oxygenate-blend other than methanol blend is used, it should contain no more than 10% oxygenate. (MTBE may, however, be added up to 15%.)**
- **If a methanol blend is used, it should contain no more than 5% methanol (methyl alcohol, wood alcohol). It should also contain a suitable amount of appropriate cosolvents and corrosion inhibitors. If not properly formulated with appropriate cosolvents and corrosion inhibitors, such methanol blends may cause fuel system damage and/or vehicle performance problems. At this time, sufficient data is not available to ensure that all methanol blends are suitable for use in INFINITI vehicles.**

If any driveability problems such as engine stalling and difficult hot-starting are experienced after using oxygenate-blend fuels, immediately change to a non-oxygenate fuel or a fuel with a low blend of MTBE.

Take care not to spill gasoline during refueling. Gasoline containing oxygenates can cause paint damage.

E–85 fuel

E-85 fuel is a mixture of approximately 85% fuel ethanol and 15% unleaded gasoline. E-85 can only be used in a Flexible Fuel Vehicle (FFV). Do not use E-85 in your vehicle. U.S. government regulations require fuel ethanol dispensing pumps to be identified by a small, square, orange and black label with the common abbreviation or the appropriate percentage for that region.

Aftermarket fuel additives

INFINITI does not recommend the use of any aftermarket fuel additives (for example, fuel injector cleaner, octane booster, intake valve deposit removers, etc.) which are sold commercially. Many of these additives intended for gum, varnish or deposit removal may contain active solvents or similar ingredients that can be harmful to the fuel system and engine.

Octane rating tips

Using unleaded gasoline with an octane rating lower than recommended can cause persistent, heavy "spark knock." ("Spark knock" is a metallic rapping noise.) If severe, this can lead to engine damage. If you detect a persistent heavy spark knock even when using gasoline of the stated octane rating, or if you hear steady spark knock while holding a steady speed on level roads, have an INFINITI dealer correct the condition. Failure to correct the condition is misuse of the vehicle, for which INFINITI is not responsible.

Incorrect ignition timing may result in spark knock, after-run and/or overheating, which may cause excessive fuel consumption or engine damage. If any of the above symptoms are encountered, have your vehicle checked at an INFINITI dealer.

However, now and then you may notice light spark knock for a short time while accelerating or driving up hills. This is not a cause for concern, because you get the greatest fuel benefit when there is light spark knock for a short time under heavy engine load.

⚠ CAUTION

- **Your vehicle is not designed to run on E-85 fuel. Using E-85 fuel in a vehicle not specifically designed for E-85 fuel can damage fuel system components and is not covered by the INFINITI new vehicle limited warranty.**
- **E-85 is a mixture of approximately 85% fuel ethanol and 15% unleaded gasoline.**
- **U.S. government regulations require ethanol dispensing pumps to be identified by a small, square, orange and black label with the common abbreviation or the appropriate percentage for that region.**

API certification mark

API service symbol

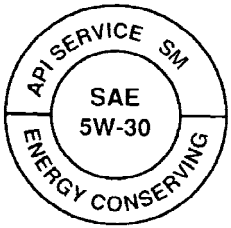

WTI0183

ENGINE OIL AND OIL FILTER RECOMMENDATIONS

Selecting the correct oil

It is essential to choose the correct grade, quality and viscosity engine oil to ensure satisfactory engine life and performance. See "Capacities and recommended fuel/lubricants" earlier in this section. INFINITI recommends the use of an energy conserving oil in order to improve fuel economy.

Select only engine oils that meet the American Petroleum Institute (API) certification or International Lubricant Standardization and Approval Committee (ILSAC) certification and SAE viscosity standard. These oils have the API certification mark on the front of the container. Oils which do not have the specified quality label should not be used as they could cause engine damage.

Oil additives

INFINITI does not recommend the use of oil additives. The use of an oil additive is not necessary when the proper oil type is used and maintenance intervals are followed.

Oil which may contain foreign matter or has been previously used should not be used.

Oil viscosity

The engine oil viscosity or thickness changes with temperature. Because of this, it is important to select the engine oil viscosity based on the temperatures at which the vehicle will be operated before the next oil change. Choosing an oil viscosity other than that recommended could cause serious engine damage.

Selecting the correct oil filter

Your new INFINITI vehicle is equipped with a high-quality genuine NISSAN oil filter. When replacing, use a genuine NISSAN oil filter or its equivalent for the reason described in “Change intervals”.

Change intervals

The oil and oil filter change intervals for your engine are based on the use of the specified quality oils and filters. Using engine oil and filters that are not of the specified quality, or exceeding recommended oil and filter change intervals could reduce engine life. Damage to the engine caused by improper maintenance or use of incorrect oil and filter quality and/or viscosity is not covered by the INFINITI new vehicle limited warranty.

Your engine was filled with a high-quality engine oil when it was built. You do not have to change the oil before the first recommended change interval. Oil and filter change intervals depend upon how you use your vehicle.

Operation under the following conditions may require more frequent oil and filter changes:

- repeated short distance driving at cold outside temperatures
- driving in dusty conditions
- extensive idling
- towing a trailer
- stop and go commuting

Refer to the “INFINITI Service and Maintenance Guide” for the maintenance schedule.

AIR CONDITIONER SYSTEM REFRIGERANT AND OIL RECOMMENDATIONS

The air conditioner system in your INFINITI vehicle must be charged with the refrigerant HFC-134a (R-134a) and the oil, NISSAN A/C system oil DH-PS or the exact equivalents.

⚠ CAUTION

The use of any other refrigerant or oil will cause severe damage to the air conditioning system and will require the replacement of all air conditioner system components.

The refrigerant HFC-134a (R-134a) in your INFINITI vehicle does not harm the earth’s ozone layer. Although this refrigerant does not affect the earth’s atmosphere, certain government regulations require the recovery and recycling of any refrigerant during automotive air conditioner system service. An INFINITI dealer has the trained technicians and equipment needed to recover and recycle your air conditioner system refrigerant.

Contact an INFINITI dealer when servicing your air conditioner system.

SPECIFICATIONS

ENGINE

Model	VK56DE
Type	Gasoline, 4-cycle, DOHC
Cylinder arrangement	8-cylinder, V-block, Slanted at 90°
Bore x Stroke	in (mm) 3.858 x 3.622 (98 x 92)
Displacement	cu in (cm^3) 338.78 (5,552)
Firing order	1–8–7–3–6–5–4–2
Idle speed	No adjustment is necessary.
A/T (in “N” position)	
Ignition timing (degree B.T.D.C. at idle speed)	
CO % at idle	
Spark plug	DILFR5A-11
Spark plug gap (Nominal)	in (mm) 0.043 (1.1)
Camshaft operation	Timing chain

This spark ignition system complies with the Canadian standard ICES-002.

WHEELS AND TIRES

Wheels	20 x 8.0J
Tires	P275/60R20
Spare tire	Full size

DIMENSIONS AND WEIGHTS

Overall length	in (mm)	206.9(5,254)
Overall width	in (mm)	79.6(2,021)
Overall height		
2wd with roof rack	in (mm)	76.7(1,948)
4wd with roof rack	in (mm)	77.5(1,968)
Front Track	in (mm)	68.1(1,729)
Rear Track	in (mm)	68.1(1,729)
Wheelbase	in (mm)	123.2(3,130)
Gross vehicle weight rating	lb (kg)	See the “F.M.V.S.S./C.M.V.S.S. certification label” on the center pillar between the driver’s side front and side doors.
Gross axle weight rating		
Front	lb (kg)	
Rear	lb (kg)	

WHEN TRAVELING OR REGISTERING YOUR VEHICLE IN ANOTHER COUNTRY

When planning to drive your INFINITI vehicle in another country, you should first find out if the fuel available is suitable for your vehicle's engine.

Using fuel with an octane rating that is too low may cause engine damage. All gasoline vehicles must be operated with unleaded gasoline. Therefore, avoid taking your vehicle to areas where appropriate fuel is not available.

When transferring the registration of your vehicle to another country, state, province or district, it may be necessary to modify the vehicle to meet local laws and regulations.

The laws and regulations for motor vehicle emission control and safety standards vary according to the country, state, province or district; therefore, vehicle specifications may differ.

When any vehicle is to be taken into another country, state, province or district and registered, its modifications, transportation, and registration are the responsibility of the user. INFINITI is not responsible for any inconvenience that may result.

VEHICLE IDENTIFICATION

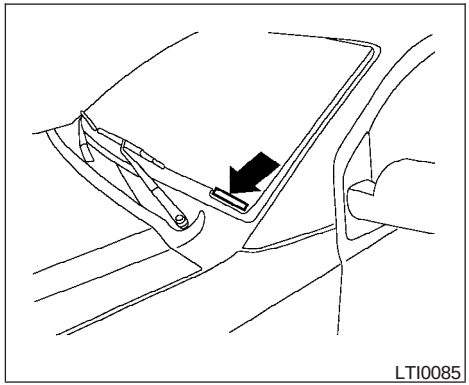

VEHICLE IDENTIFICATION NUMBER (VIN) PLATE

The vehicle identification number (VIN) plate is attached as shown. This number is the identification for your vehicle and is used in the vehicle registration.

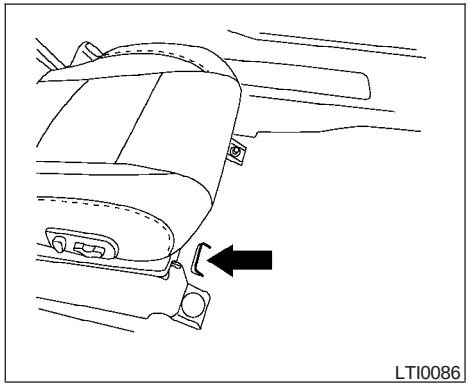

VEHICLE IDENTIFICATION NUMBER (chassis number)

The vehicle identification number is located as shown.

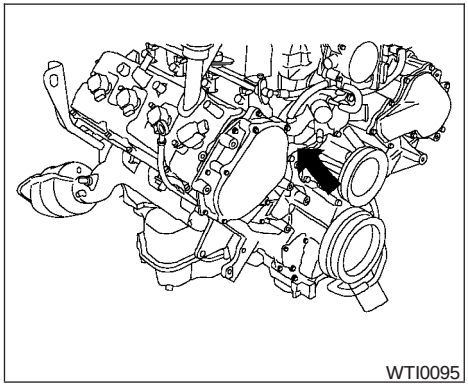

ENGINE SERIAL NUMBER

The number is stamped on the engine as shown.

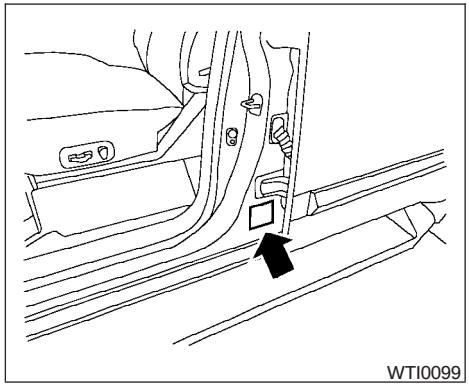

F.M.V.S.S./C.M.V.S.S. CERTIFICATION LABEL

The Federal/Canadian Motor Vehicle Safety Standard (F.M.V.S.S./C.M.V.S.S.) certification label is affixed as shown. This label contains valuable vehicle information, such as: Gross Vehicle Weight Ratings (GVWR), Gross Axle Weight Rating (GAWR), month and year of manufacture, Vehicle Identification Number (VIN), etc. Review it carefully.

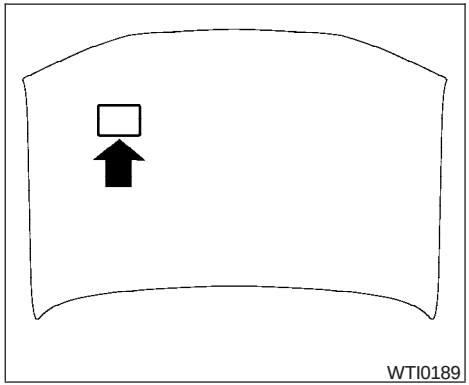

EMISSION CONTROL INFORMATION LABEL

The emission control information label is attached to the underside of the hood as shown.

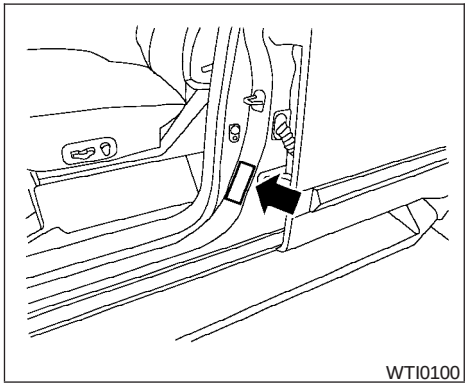

TIRE AND LOADING INFORMATION LABEL

The cold tire pressure is shown on the Tire and Loading Information label. The label is located as shown.

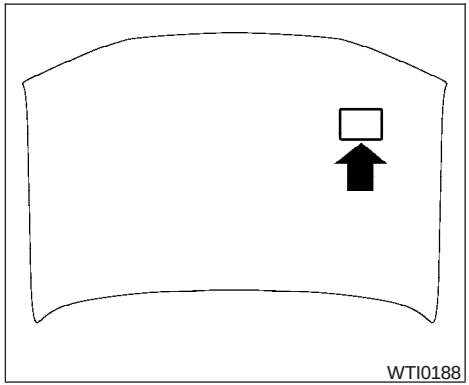

AIR CONDITIONER SPECIFICATION LABEL

The air conditioner specification label is affixed to the underside of the hood as shown.

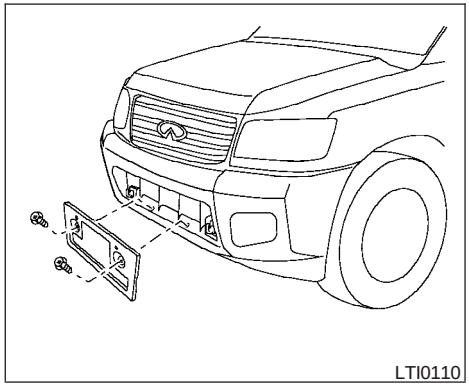

Use the following steps to mount the front license plate:

1. Make holes on the plastic finisher at the location mark (small dimple) using a 0.20 in (5 mm) drill. Apply light pressure to the drill. Install the license plate holder using the two screws provided with the holder.
2. Mount the license plate **using two M6-14mm bolts.**

   License plate bolt tightening torque: 3.8 - 4.7 ft-lb (5.10 - 6.37 N·m)

⚠WARNING

- **It is extremely dangerous to ride in a cargo area inside a vehicle. In a collision, people riding in these areas are more likely to be seriously injured or killed.**
- **Do not allow people to ride in any area of your vehicle that is not equipped with seats and seat belts.**
- **Be sure everyone in your vehicle is in a seat and using a seat belt properly.**

TERMS

It is important to familiarize yourself with the following terms before loading your vehicle:

- Curb Weight (actual weight of your vehicle) - vehicle weight including: standard and optional equipment, fluids, emergency tools, and spare tire assembly. This weight **does not** include passengers and cargo.
- GVW (Gross Vehicle Weight) - curb weight plus the combined weight of passengers and cargo.
- GVWR (Gross Vehicle Weight Rating) - maximum total combined weight of the unloaded vehicle, passengers, luggage, hitch, trailer tongue load and any other optional equipment. This information is located on the F.M.V.S.S./C.M.V.S.S. certification label.
- GAWR (Gross Axle Weight Rating) - maximum weight (load) limit specified for the front or rear axle. This information is located on the F.M.V.S.S./C.M.V.S.S. certification label.
- GCWR (Gross Combined Weight rating) - The maximum total weight rating of the vehicle, passengers, cargo, and trailer.
- Vehicle Capacity Weight, Load limit, Total load capacity - maximum total weight limit specified of the load (passengers and cargo) for the vehicle. This is the maximum combined weight of occupants and cargo that can be loaded into the vehicle. If the vehicle is used to tow a trailer, the trailer tongue weight must be included as part of the cargo load. This information is located on the Tire and Loading Information label (if so equipped).
- Cargo capacity - permissible weight of cargo, the subtracted weight of occupants from the load limit.

VEHICLE LOAD CAPACITY

Do not exceed the load limit of your vehicle shown as “The combined weight of occupants and cargo” on the Tire and Loading Information label. Do not exceed the number of occupants shown as “Seating Capacity” on the Tire and Loading Information label.

To get “the combined weight of occupants and cargo”, add the weight of all occupants, then add the total luggage weight. Examples are shown in the following illustration.

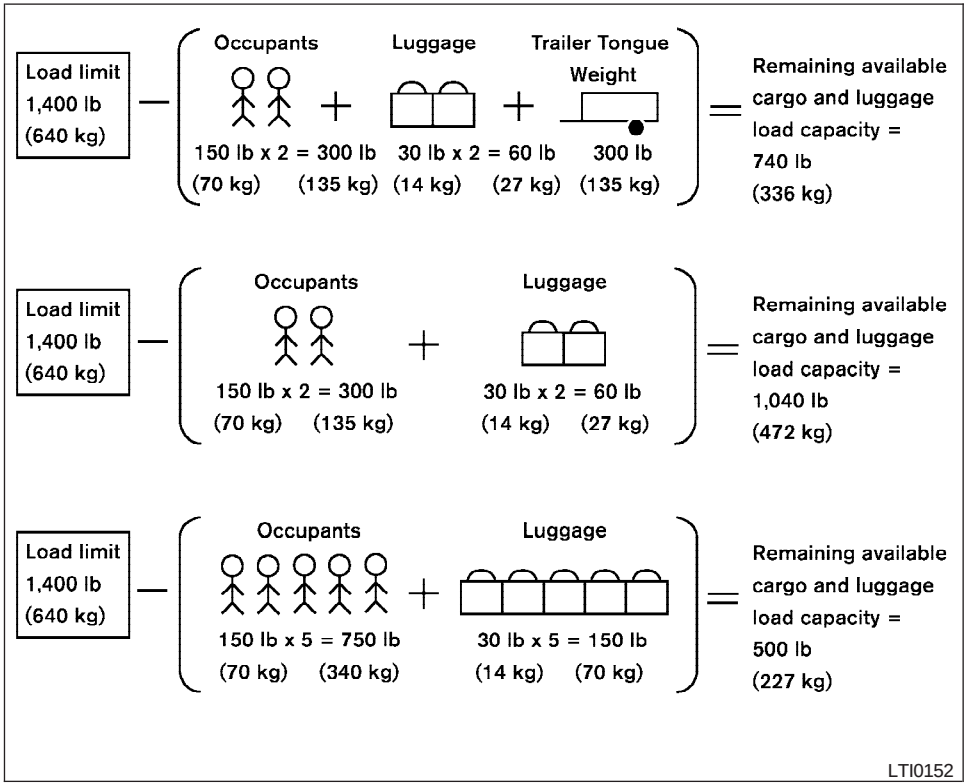

Example

Steps for determining correct load limit

1. Locate the statement “The combined weight of occupants and cargo should never exceed XXX kg or XXX lbs” on your vehicle’s placard.
2. Determine the combined weight of the driver and passengers that will be riding in your vehicle.
3. Subtract the combined weight of the driver and passengers from XXX kg or XXX lbs.
4. The resulting figure equals the available amount of cargo and luggage load capacity. For example, if the XXX amount equals 1400 lbs. and there will be five 150 lb. passengers in your vehicle, the amount of available cargo and luggage load capacity is 650 lbs. (1400-750 (5 X 150) = 650 lbs) or (640-340 (5 X 70) = 300 kg.)

5. Determine the combined weight of luggage and cargo being loaded on the vehicle. That weight may not safely exceed the available cargo and luggage load capacity calculated in Step 4.
6. If your vehicle will be towing a trailer, load from your trailer will be transferred to your vehicle. Consult this manual to determine how this reduces the available cargo and luggage load capacity of your vehicle.

Before driving a loaded vehicle, confirm that you do not exceed the Gross Vehicle Weight Rating (GVWR) or the Gross Axle Weight Rating (GAWR) for your vehicle. See “Measurement of Weights” later in this section.

Also check tires for proper inflation pressures. See the Tire and Loading Information label.

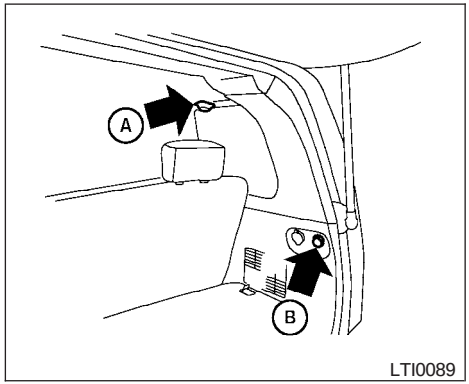

Cargo area ceiling tie-down hooks

SECURING THE LOAD

There are tie down hooks located in the cargo area as shown. The tie down hooks can be used to secure cargo with ropes or other types of straps.

Do not apply a total load of more than 55 lbs. (245 N) to a single Ⓐ plastic hook or 44 lbs. (196 N) to a single Ⓑ plastic hook when securing cargo.

Do not apply a total load of more than 110 lbs. (490 N) to a single metal floor tie-down hook when securing cargo.

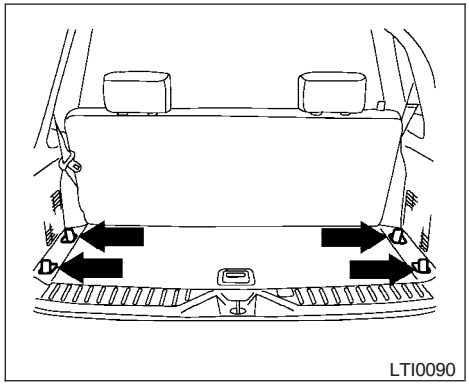

Cargo area floor tie-down hooks

⚠ WARNING

- **Properly secure all cargo with ropes or straps to help prevent it from sliding or shifting. Do not place cargo higher than the seatbacks. In a sudden stop or collision, unsecured cargo could cause personal injury.**
- **The child restraint top tether strap may be damaged by contact with items in the cargo area. Secure any items in the cargo area. Your child could be seriously injured or killed in a collision if the top tether strap is damaged.**

- **Do not load your vehicle any heavier than the GVWR or the maximum front and rear GAWRs. If you do, parts of your vehicle can break, tire damage could occur, or it can change the way your vehicle handles. This could result in loss of control and cause personal injury.**

LOADING TIPS

- The GVW must not exceed GVWR or GAWR as specified on the F.M.V.S.S./C.M.V.S.S. certification label.
- Do not load the front and rear axle to the GAWR. Doing so will exceed the GVWR.

⚠ WARNING

- **Properly secure all cargo with ropes or straps to help prevent it from sliding or shifting. Do not place cargo higher than the seatbacks. In a sudden stop or collision, unsecured cargo could cause personal injury.**
- **Do not load your vehicle any heavier than the GVWR or the maximum front and rear GAWRs. If you do, parts of your vehicle can break, tire damage could occur, or it can change the way your vehicle handles. This could result in loss of control and cause personal injury.**
- **Overloading not only can shorten the life of your vehicle and the tire, but can also cause unsafe vehicle handling and longer braking distances. This may cause a premature tire failure which could result in a serious accident and personal injury. Failures caused by overloading are not covered by the vehicle's warranty.**

MEASUREMENT OF WEIGHTS

Secure loose items to prevent weight shifts that could affect the balance of your vehicle. When the vehicle is loaded, drive to a scale and weigh the front and the rear wheels separately to determine axle loads. Individual axle loads should not exceed either of the gross axle weight ratings (GAWR). The total of the axle loads should not exceed the gross vehicle weight rating (GVWR). These ratings are given on the vehicle certification label. If weight ratings are exceeded, move or remove items to bring all weights below the ratings.

⚠ WARNING

Overloading or improper loading of a trailer and its cargo can adversely affect vehicle handling, braking and performance and may lead to accidents.

⚠ CAUTION

- **Do not tow a trailer or haul a heavy load for the first 500 miles (800 km). Your engine, axle or other parts could be damaged.**
- **For the first 500 miles (800 km) that you tow a trailer, do not drive over 50 mph (80 km/h) and do not make starts at full throttle. This helps the engine and other parts of your vehicle wear in at the heavier loads.**

Your new vehicle was designed to be used primarily to carry passengers and cargo. Remember that towing a trailer places additional loads on your vehicle's engine, drive train, steering, braking and other systems.

An INFINITI Towing Guide (U.S. only) is available on the website at *www.infiniti.com.* This guide includes information on trailer towing capability and the special equipment required for proper towing.

MAXIMUM LOAD LIMITS

Maximum trailer loads

Never allow the total trailer load to exceed the value specified in the following Towing Load/Specification Chart found later in this section. The total trailer load equals trailer weight plus its cargo weight.

- **When towing a trailer load of 3,500 lbs. (1587 kg) or more, trailers with a brake system MUST be used.**

The maximum Gross Combined Weight Rating (GCWR) should not exceed the value specified in the following Towing Load/Specification Chart.

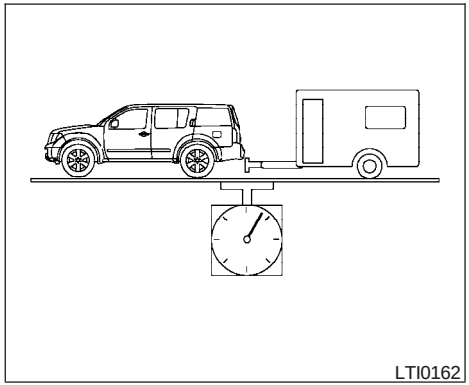

The GCWR equals the combined weight of the towing vehicle (including passengers and cargo) plus the total trailer load. Towing loads greater than these or using improper towing equipment could adversely affect vehicle handling, braking and performance.

The ability of your vehicle to tow a trailer is not only related to the maximum trailer loads, but also the places you plan to tow. Tow weights appropriate for level highway driving may have to be reduced for low traction situations (for example, on slippery boat ramps).

Temperature conditions can also affect towing. For example, towing a heavy trailer in high outside temperatures on graded roads can affect engine performance and cause overheating. The engine protection mode, which helps reduce the chance of engine damage, could activate and automatically decrease engine power. Vehicle speed may decrease under high load. Plan your trip carefully to account for trailer and vehicle load, weather and road conditions.

⚠ WARNING

Overheating can result in reduced engine power and vehicle speed. The reduced speed may be lower than other traffic, which could increase the chance of a collision. Be especially careful when driving. If the vehicle cannot maintain a safe driving speed, pull to the side of the road in a safe area. Allow the engine to cool and return to normal operation. See "If your vehicle overheats" in the "In case of emergency" section of this manual.

⚠ CAUTION

Vehicle damage resulting from improper towing procedures is not covered by INFINITI warranties.

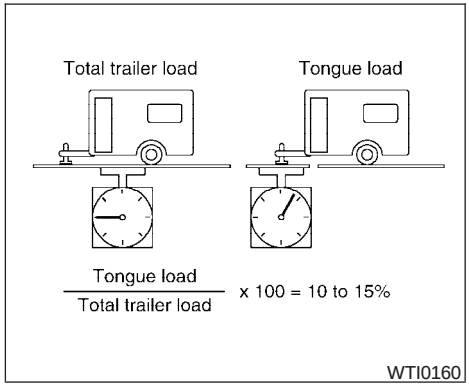

Tongue load

When using a weight carrying or a weight distributing hitch, keep the tongue load between 10 - 15 percent of the total trailer load or use the trailer tongue load specified by the trailer manufacturer. The tongue load must be within the maximum tongue load limits shown in the following "Towing Load/Specification" chart. If the tongue load becomes excessive, rearrange cargo to allow for proper tongue load.

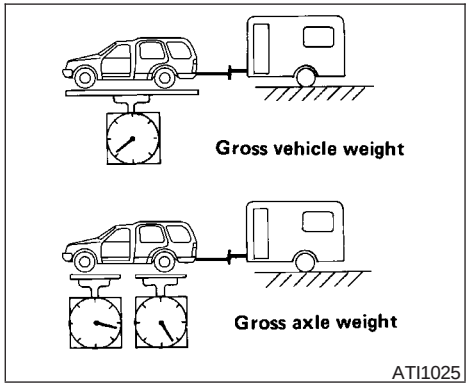

Maximum Gross Vehicle Weight (GVW)/maximum Gross Axle Weight (GAW)

The GVW of the towing vehicle must not exceed the Gross Vehicle Weight Rating (GVWR) shown on the F.M.V.S.S./C.M.V.S.S. certification label. The GVW equals the combined weight of the unloaded vehicle, passengers, luggage, hitch, trailer tongue load and any other optional equipment. In addition, front or rear GAW must not exceed the Gross Axle Weight Rating (GAWR) shown on the F.M.V.S.S./C.M.V.S.S. certification label.

Towing capacities are calculated assuming a base vehicle with driver and any options required to achieve the rating. Additional passengers, cargo and/or optional equipment, such as the trailer hitch, will add weight to the vehicle and reduce your vehicle's maximum towing capacity and trailer tongue load.

The vehicle and trailer need to be weighed to confirm the vehicle is within the GVWR, Front GAWR, Rear GAWR, Gross Combined Weight Rating (GCWR) and Towing capacity.

All vehicle and trailer weights can be measured using platform type scales commonly found at truck stops, highway weigh stations, building supply centers or salvage yards.

To determine the available payload capacity for tongue/king pin load, use the following procedure.

1. Locate the GVWR on the F.M.V.S.S./C.M.V.S.S. certification label.
2. Weigh your vehicle on the scale with all of the passengers and cargo that are normally in the vehicle when towing a trailer.
3. Subtract the actual vehicle weight from the GVWR. The remaining amount is the available maximum tongue/king pin load.

To determine the available towing capacity, use the following procedure.

1. Find the GCWR for your vehicle on the "Towing Load/Specification" chart found later in this section.
2. Subtract the actual vehicle weight from the GCWR. The remaining amount is the available maximum towing capacity.

To determine the Gross Trailer Weight, weigh your trailer on a scale with all equipment and cargo, that are normally in the trailer when it is towed. Make sure the Gross trailer weight is not more than the Gross Trailer Weight Rating shown on the trailer and is not more than the calculated available maximum towing capacity.

Also weigh the front and rear axles on the scale to make sure the Front Gross Axle Weight and Rear Gross Axle Weight are not more than Front Gross Axle Weight and Rear Gross Axle Weight on the F.M.V.S.S./C.M.V.S.S. certification label. The cargo in the trailer and vehicle may need to be moved or removed to meet the specified ratings.

Example:

- Gross Vehicle Weight (GVW) as weighed on a scale - including passengers, cargo and hitch - 6,400 lb. (2902 kg).
- Gross Vehicle Weight Rating (GVWR) from F.M.V.S.S./C.M.V.S.S. certification label - 7,300 lb. (3311 kg).
- Gross Combined Weight Rating (GCWR) from "Towing Load/Specification" chart - 15,100 lb. (6849 kg).
- Maximum Trailer towing capacity from "Towing Load/Specification" chart - 9,000 lb. (4082 kg).

7,300 lb. (3311 kg)	GVWR
– 6,400 lb. (2902 kg)	GVW
= 900 lb. (409 kg)	Available for tongue weight
15,100 lb. (6849 kg)	GCWR
– 6,400 lb. (2902 kg)	GVW
= 8,700 lb. (3947 kg)	Capacity available for towing
900 lb. (409 kg)	Available tongue weight
/ 8,700 lb. (3947 kg)	Available capacity
=	10 % tongue weight

The available towing capacity may be less than the maximum towing capacity due to the passenger and cargo load in the vehicle.

Remember to keep trailer tongue weight between 10 - 15% of the trailer weight or within the trailer tongue load specification recommended by the trailer manufacturer. If the tongue load becomes excessive, rearrange the cargo to obtain the proper tongue load. Do not exceed the maximum tongue weight specification shown in the “Towing load/specification” chart even if the calculated available tongue weight is greater than 15%. If the calculated tongue weight is less than 10% , reduce the total trailer weight to match the available tongue weight.

Always verify that available capacities are within the required ratings.

TOWING LOAD/SPECIFICATION

	US		CAN
	2WD	4WD	4WD
Maximum Towing Capacity *1 *2	9,000 lb. (4,082 kg)	8,900 lb. (4,037 kg)	8,900 lb. (4,037 kg)
Maximum Tongue Load	900 lb. (408 kg)	890 lb. (404 kg)	890 lb. (404 kg)
Maximum Gross Combined Weight Rating	15,100 lb. (6,849 kg)	15,100 lb. (6,849 kg)	15,100 lb. (6,849 kg)

*1: The towing capacity values are calculated assuming a base vehicle with driver and any options required to achieve the rating. Additional passengers, cargo and/or optional equipment will add weight to the vehicle and reduce your vehicle’s maximum towing capacity.

*2: Use of a weight-distributing hitch system is recommended when towing over 5,000 lbs.

TOWING SAFETY

Trailer hitch

Your vehicle may be equipped with an optional trailer tow package. The trailer tow package includes a receiver-type frame mounted hitch. This hitch is rated for the maximum towing capacity of this vehicle when the proper towing equipment is used. Choose a proper ball mount and hitch ball that is rated for the trailer to be towed. Genuine INFINITI ball mounts and hitch balls are available from your INFINITI dealer.

If your vehicle is not equipped with the optional trailer tow package, check the towing capacity of your bumper hitch or receiver-type frame mounted hitch. Choose a proper hitch for your vehicle and trailer. A genuine INFINITI trailer hitch is available from your INFINITI dealer. Make sure the trailer hitch is securely attached to the vehicle to help avoid personal injury or property damage due to sway caused by crosswinds, rough road surfaces or passing trucks.

⚠ WARNING

Trailer hitch components have specific weight ratings. Your vehicle may be capable of towing a trailer heavier than the weight rating of the hitch components. Never exceed the weight rating of the hitch components. Doing so can cause serious personal injury or property damage.

Hitch ball

Choose a hitch ball of the proper size and weight rating for your trailer:

- The required hitch ball size is stamped on most trailer couplers. Most hitch balls also have the size printed on the top of the ball.
- Choose the proper class hitch ball based on the trailer weight.
- The diameter of the threaded shank of the hitch ball must be matched to the ball mount hole diameter. The hitch ball shank should be no more than 1/16” smaller than the hole in the ball mount.
- The threaded shank of the hitch ball must be long enough to be properly secured to the ball mount. There should be at least 2 threads showing beyond the lock washer and nut.

Ball mount

The hitch ball is attached to the ball mount and the ball mount is inserted into the hitch receiver. Choose a proper class ball mount based on the trailer weight. Additionally, the ball mount should be chosen to keep the trailer tongue level with the ground.

Weight carrying hitches

A weight carrying or “dead weight” ball mount is one that is designed to carry the whole amount of tongue weight and gross weight directly on the ball mount and on the receiver.

Weight distribution hitch

This type of hitch is also called a “load-leveling” or “equalizing” hitch. A set of bars attach to the ball mount and to the trailer to distribute the tongue weight (hitch weight) of your trailer. Many vehicles can’t carry the full tongue weight of a given trailer, and need some of the tongue weight transferred through the frame and pushing down on the front wheels. This gives stability to the tow vehicle.

A weight-distributing hitch system (Class IV) is recommended if you plan to tow trailers with a maximum weight over 5,000 lbs. Check with the trailer and towing equipment manufacturers to determine if they recommend the use of a weight-distributing hitch system.

NOTE:

A weight-distributing hitch system may affect the operation of trailer surge brakes. If you are considering use of a weight-distributing hitch system with a surge brake-equipped trailer, check with the surge brake, hitch or trailer manufacturer to determine if and how this can be done.

Follow the instructions provided by the manufacturer for installing and using the weight-distributing hitch system.

General set-up instructions are as follows:

1. Park unloaded vehicle on a level surface. With the ignition on and the doors closed, allow the vehicle to stand for several minutes so that it can level.
2. Measure the height of a reference point on the front and rear bumpers at the center of the vehicle.
3. Attach the trailer to the vehicle and adjust the hitch equalizers so that the front bumper height is within 0 - .5 inches (0 – 13 mm) of the reference height measured in step 2. The rear bumper should be no higher than the reference height measured in step 2.

⚠ WARNING

Properly adjust the weight distributing hitch so the rear of the bumper is no higher than the measured reference height when the trailer is attached. If the rear bumper is higher than the measured reference height when loaded, the vehicle may handle unpredictably which could cause a loss of vehicle control and cause serious personal injury or property damage.

Sway control device

Sudden maneuvers, wind gusts, and buffeting caused by other vehicles can affect trailer handling. Sway control devices may be used to help control these affects. If you choose to use one, contact a reputable trailer hitch supplier to make sure the sway control device will work with the vehicle, hitch, trailer and the trailer's brake system. Follow the instructions provided by the manufacturer for installing and using the sway control device.

Class I hitch

Class I trailer hitch equipment (receiver, ball mount and hitch ball) can be used to tow trailers of a maximum weight of 2,000 lb (909 kg).

Class II hitch

Class II trailer hitch equipment (receiver, ball mount and hitch ball) can be used to tow trailers of a maximum weight of 3,500 lb (1,510 kg).

Class III hitch

Class III trailer hitch equipment (receiver, ball mount and hitch ball) can be used to tow trailers of a maximum weight of 5,000 lb (2,272 kg).

Class IV hitch

Class IV trailer hitch equipment (receiver, ball mount and hitch ball) can be used to tow trailers of a maximum weight of 10,000 lb (4,545 kg). A weight distributing hitch should be used to tow trailers that weigh over 5,000 lb (2,272 kg).

Your vehicle may be equipped with Class IV trailer hitch equipment that has a 10,000 lb (4,545 kg) maximum weight rating, but your vehicle is only capable of towing the maximum trailer weights shown in the "Towing Load/ Specification" chart earlier in this section.

⚠ CAUTION

- **Special hitches which include frame reinforcements are required for towing above 2,000 lb (907 kg). Suitable genuine INFINITI hitches, ball mounts and hitch balls for pickup trucks and sport utility vehicles are available at an INFINITI dealer.**
- **The hitch should not be attached to or affect the operation of the impact-absorbing bumper.**
- **Do not use axle-mounted hitches.**
- **Do not modify the vehicle exhaust system, brake system, etc. to install a trailer hitch.**
- **To reduce the possibility of additional damage if your vehicle is struck from the rear, where practical, remove the receiver when not in use.**
- **Regularly check that all trailer hitch mounting bolts are securely mounted.**
- **When towing with the hitch ball mounted to the rear bumper, do not make sharp turns. The trailer may contact the bumper and cause damage to the bumper or trailer.**

Tire pressures

- When towing a trailer, inflate the vehicle tires to the recommended cold tire pressure indicated on the tire placard.
- Trailer tire condition, size, load rating and proper inflation pressure should be in accordance with the trailer and tire manufacturer's specifications.

Safety chains

Always use suitable safety chains between your vehicle and the trailer. The safety chains should be crossed and should be attached to the hitch, not to the vehicle bumper or axle. The safety chains can be attached to the bumper if the hitch ball is mounted to the bumper. Be sure to leave enough slack in the chains to permit turning corners.

Trailer lights

⚠ CAUTION

When splicing into the vehicle electrical system, a commercially available power-type module/converter must be used to provide power for all trailer lighting. This unit uses the vehicle battery as a direct power source for all trailer lights while using the vehicle tail light, stoplight and turn signal circuits as a signal source. The module/converter must draw no more that 15 milliamps from the stop and tail lamp circuits. Using a module/converter that exceeds these power requirements may damage the vehicle's electrical system. See a reputable trailer dealer to obtain the proper equipment and to have it installed.

Trailer lights should comply with federal and/or local regulations. For assistance in hooking up trailer lights, contact an INFINITI dealer or reputable trailer dealer. Vehicles equipped with the optional trailer tow package are equipped with a 7-pin trailer harness connector. If your trailer is equipped with a flat 4-pin connector, an adapter will be needed to connect the trailer lights to the vehicle. Adapters are available at auto parts stores and hitch retailers.

Trailer brakes

When towing a trailer load of 3,500 lbs. (1587 kg) or more, trailers with a brake system MUST be used. However, most states require a separate braking system on trailers with a loaded weight above a specific amount. Make sure the trailer meets the local regulations and the regulations where you plan to tow.

Several types of braking systems are available.

Surge Brakes - The surge brake actuator is mounted on the trailer tongue with a hydraulic line running to each trailer wheel. Surge brakes are activated by the trailer pushing against the hitch ball when the tow vehicle is braking. Hydraulic surge brakes are common on rental trailers and some boat trailers. In this type of system, there is no hydraulic or electric connection for brake operation between the tow vehicle and the trailer.

Electric Trailer Brakes - Electric braking systems are activated by an electronic signal sent from a trailer brake controller (special brake-sensing module). If electric trailer brakes are used, see "Electric trailer brake controller" in this section.

Have a professional supplier of towing equipment make sure the trailer brakes are properly installed and demonstrate proper brake function testing.

⚠ WARNING

Never connect a trailer brake system directly to the vehicle brake system.

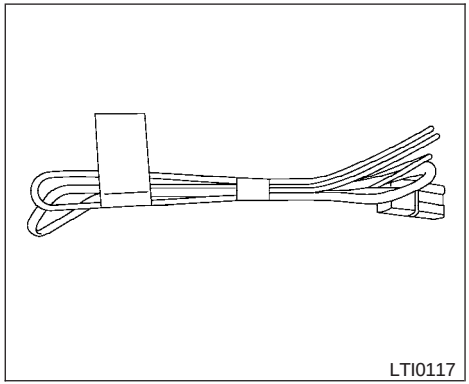

example

Electric trailer brake controller

Trailers equipped with electric brakes may require the installation of an aftermarket trailer brake controller.

Your vehicle is equipped with a connector and jumper harness that is specifically designed to be used when installing an aftermarket brake controller.

To install the electric trailer brake controller jumper harness, perform the following procedure:

1. Open the driver door. Move the seat to the rearmost position.

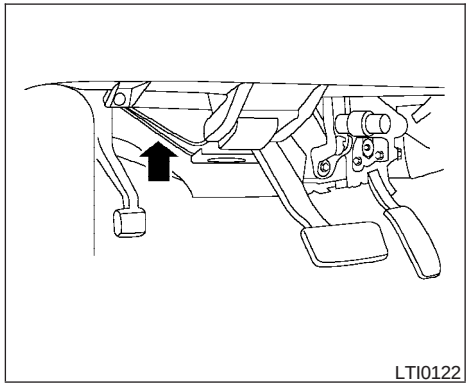

2. Apply the parking brake to access the jumper harness connector.

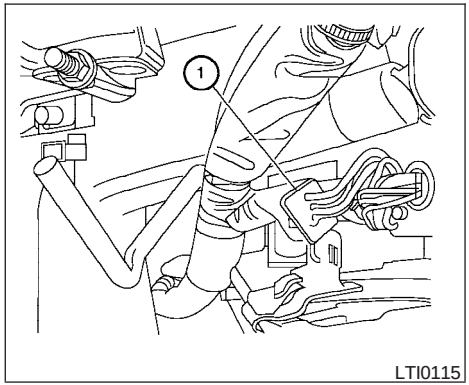

3. Locate the jumper harness connector under the lower portion of the instrument panel. The connector is taped to the wiring harness ① as indicated.

- The connector is marked with a white tag with “electric brake connector”.

Wire color designation for electric trailer brake controller jumper harness.

WIRE COLOR	NOTE
RED/GREEN	Vehicle stop lamp switch to trailer brake controller.
BLACK	Brake controller ground (-).
BROWN/WHITE	Trailer brake controller switched output.
RED/BLUE	Trailer brake controller illumination.
RED	Fused trailer brake controller battery feed (B+).

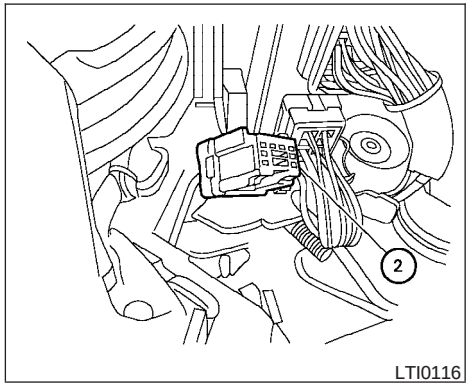

4. Peel off the tape and connect the jumper harness to the connector ②.
5. Release the parking brake.
6. Install the aftermarket electric trailer brake controller according to the manufacturer's instructions.

Pre-towing tips

- Be certain your vehicle maintains a level position when a loaded and/or unloaded trailer is hitched. Do not drive the vehicle if it has an abnormal nose-up or nose-down condition; check for improper tongue load, overload, worn suspension or other possible causes of either condition.
- Always secure items in the trailer to prevent load shift while driving.
- Keep the cargo load as low as possible in the trailer to keep the trailer center of gravity low.
- Load the trailer so approximately 60% of the trailer load is in the front half and 40% is in the back half. Also make sure the load is balanced side to side.
- Check your hitch, trailer tire pressure, vehicle tire pressure, trailer light operation, and trailer wheel lug nuts every time you attach a trailer to the vehicle.
- Be certain your rearview mirrors conform to all federal, state or local regulations. If not, install any mirrors required for towing before driving the vehicle.
- Determine the overall height of the vehicle and trailer so the required clearance is known.

Trailer towing tips

In order to gain skill and an understanding of the vehicle's behavior, you should practice turning, stopping and backing up in an area which is free from traffic. Steering stability and braking performance will be somewhat different than under normal driving conditions.

- Always secure items in the trailer to prevent load shift while driving.
- Lock the trailer hitch coupler with a pin or lock to prevent the coupler from inadvertently becoming unlatched.
- Avoid abrupt starts, acceleration or stops.
- Avoid sharp turns or lane changes.
- Always drive your vehicle at a moderate speed.
- When backing up, hold the bottom of the steering wheel with one hand. Move your hand in the direction in which you want the trailer to go. Make small corrections and back up slowly. If possible, have someone guide you when you are backing up.

Always block the wheels on both vehicle and trailer when parking. Parking on a slope is not recommended; however, if you must do so:

⚠ CAUTION

If you move the shift selector lever to the P (Park) position before blocking the wheels and applying the parking brake, transmission damage could occur.

1. Apply and hold the brake pedal.
2. Have someone place blocks on the downhill side of the vehicle and trailer wheels.
3. After the wheel blocks are in place, slowly release the brake pedal until the blocks absorb the vehicle load.
4. Apply the parking brake.
5. Shift the transmission into P (Park).
6. Make sure the indicator light (if so equipped) indicates the transfer case is in 4H, 4L, or 2H and that the ATP light is off. If the indicator light is flashing, or the ATP light is ON, make sure the transmission is in P (Park) (AT) and turn the 4WD switch to 2WD or 4H. See "Automatic transmission park warning light" in the "Instruments and controls" section and "Using four wheel drive" in the "Starting and driving" section.
7. Turn off the engine.

To drive away:

1. Start the vehicle.
2. Apply and hold the brake pedal.
3. Shift the transmission into gear.
4. Release the parking brake.
5. Drive slowly until the vehicle and trailer are clear from the blocks.
6. Apply and hold the brake pedal.
7. Have someone retrieve and store the blocks.

- While going downhill, the weight of the trailer pushing on the tow vehicle may decrease overall stability. Therefore, to maintain adequate control, reduce your speed and shift to a lower gear. Avoid long or repeated use of the brakes when descending a hill, as this reduces their effectiveness and could cause overheating. Shifting to a lower gear instead provides "engine braking" and reduces the need to brake as frequently.
- If the engine coolant temperature rises to a high temperature, refer to "If your vehicle overheats" in the "In case of emergency" section of this owner's manual.
- Trailer towing requires more fuel than normal circumstances.

- Avoid towing a trailer for your vehicle's first 500 miles (805 km).
- For the first 500 miles (805 km) that you do tow, do not drive over 50 MPH (80 km/h).
- Have your vehicle serviced more often than at intervals specified in the recommended Maintenance Schedule in the "INFINITI Service and Maintenance Guide".
- When making a turn, your trailer wheels will be closer to the inside of the turn than your vehicle wheels. To compensate for this, make a larger than normal turning radius during the turn.
- Crosswinds and rough roads will adversely affect vehicle/trailer handling, possibly causing vehicle sway. When being passed by larger vehicles, be prepared for possible changes in crosswinds that could affect vehicle handling.

Do the following if the trailer begins to sway:

1. Take your foot off the accelerator pedal to allow the vehicle to coast and steer as straight ahead as the road conditions allow. This combination will help stabilize the vehicle
   - Do not correct trailer sway by steering or applying the brakes.
2. When the trailer sway stops, gently apply the brakes and pull to the side of the road in a safe area.
3. Try to rearrange the trailer load so it is balanced as described earlier in this section.

- Be careful when passing other vehicles. Passing while towing a trailer requires considerably more distance than normal passing. Remember, the length of the trailer must also pass the other vehicle before you can safely change lanes.
- Use the Tow Mode or downshift the transmission to a lower gear for engine braking when driving down steep or long hills. This will help slow the vehicle without applying the brakes.
- Avoid holding the brake pedal down too long or too frequently. This could cause the brakes to overheat, resulting in reduced braking efficiency.
- Increase your following distance to allow for greater stopping distances while towing a trailer. Anticipate stops and brake gradually.
- INFINITI recommends that the cruise control not be used while towing a trailer.
- Some states or provinces have specific regulations and speed limits for vehicles that are towing trailers. Obey the local speed limits.
- Check your hitch, trailer wiring harness connections, and trailer wheel lug nuts after 50 miles (80 km) of travel and at every break.
- When launching a boat, don't allow the water level to go over the exhaust tail pipe or rear bumper.
- Make sure you disconnect the trailer lights before backing the trailer into the water or the trailer lights may burn out.

When towing a trailer, final drive gear oil should be replaced and transmission oil/fluid should be changed more frequently. For additional information, see the "Maintenance and do-it-yourself" section earlier in this manual.

Tow mode

Using tow mode is recommended when pulling a heavy trailer or hauling a heavy load. Press the TOW MODE switch to activate tow mode. The indicator light on the TOW MODE switch illuminates when tow mode is selected. Press the TOW MODE switch again to turn tow mode off. Tow mode is automatically cancelled when the ignition switch is turned OFF.

Tow mode includes the following features:

- Grade logic — Adjusts transmission shifts when pulling a trailer or hauling a load up a grade.
- Downhill Speed Control (DSC) — automatically downshifts when driving down a grade with a trailer or heavy load to help control vehicle speed.

Driving the vehicle in the tow mode with no trailer/load or light trailer/light load will not cause any damage. However, fuel economy may be reduced and the transmission/engine driving characteristics may feel unusual.

When towing a trailer, final drive gear oil should be replaced and transmission oil/fluid should be changed more frequently. For additional information, see the "Maintenance and do-it-yourself" section earlier in this manual.

FLAT TOWING

Towing your vehicle with all four wheels on the ground is sometimes called flat towing. This method is sometimes used when towing a vehicle behind a recreational vehicle, such as a motor home.

⚠ CAUTION

- **Failure to follow these guidelines can result in severe transmission damage.**
- **Whenever flat towing your vehicle, always tow forward, never backward.**
- **DO NOT tow any automatic transmission vehicle with all four wheels on the ground (flat towing). Doing so WILL DAMAGE internal transmission parts due to lack of transmission lubrication.**
- **For emergency towing procedures refer to "Towing recommended by INFINITI" in the "In case of emergency" section of this manual.**

Automatic Transmission

To tow a vehicle equipped with an automatic transmission, an appropriate vehicle dolly **MUST** be placed under the towed vehicle's drive wheels. **Always** follow the dolly manufacturer's recommendations when using their product.

⚠ WARNING

Do not use this vehicle for snowplowing. Installing a snowplow may affect vehicle handling. This may cause the driver to lose control of the vehicle and could result in serious vehicle damage or personal injury.

UNIFORM TIRE QUALITY GRADING

DOT (Department of Transportation) Quality Grades: All passenger car tires must conform to federal safety requirements in addition to these grades.

Quality grades can be found where applicable on the tire sidewall between tread shoulder and maximum section width. For example:

Treadwear 200 Traction AA Temperature A

Treadwear

The treadwear grade is a comparative rating based on the wear rate of the tire when tested under controlled conditions on a specified government test course. For example, a tire graded 150 would wear one and one-half (1 1/2) times as well on the government course as a tire graded 100. The relative performance of tires depends upon the actual conditions of their use, however, and may depart significantly from the norm due to variations in driving habits, service practices and differences in road characteristics and climate.

Traction AA, A, B and C

The traction grades, from highest to lowest, are AA, A, B, and C. Those grades represent the tire's ability to stop on wet pavement as measured under controlled conditions on specified government test surfaces of asphalt and concrete. A tire marked C may have poor traction performance.

⚠ WARNING

The traction grade assigned to this tire is based on straight-ahead braking traction tests, and does not include acceleration, cornering, hydroplaning, or peak traction characteristics.

Temperature A, B and C

The temperature grades are A (the highest), B, and C, representing the tire's resistance to the generation of heat, and its ability to dissipate heat when tested under controlled conditions on a specified indoor laboratory test wheel. Sustained high temperature can cause the material of the tire to degenerate and reduce tire life, and excessive temperature can lead to sudden tire failure. The grade C corresponds to a level of performance which all passenger car tires must meet under the Federal Motor Safety Standard No. 109. Grades B and A represent higher levels of performance on the laboratory test wheel than the minimum required by law.

⚠ WARNING

The temperature grade for this tire is established for a tire that is properly inflated and not overloaded. Excessive speed, under-inflation, or excessive loading, either separately or in combination, can cause heat build-up and possible tire failure.

EMISSION CONTROL SYSTEM WARRANTY

Your INFINITI is covered by the following emission warranties:

For USA

1. Emission Defects Warranty
2. Emissions Performance Warranty

Details of these warranties may be found with other vehicle warranties in your Warranty Information Booklet which comes with your INFINITI. If you did not receive a Warranty Information Booklet, or it is lost, you may obtain a replacement by writing to:

- INFINITI Division
  Nissan North America, Inc.
  Consumer Affairs Department
  P.O. Box 685003
  Franklin, TN 37068-5003

For Canada

Emission Control System Warranty

Details of these warranties may be found with other vehicle warranties in your Warranty Information Booklet which comes with your INFINITI. If you did not receive a Warranty Information Booklet, or it is lost, you may obtain a replacement by writing to:

- Nissan Canada Inc.
  5290 Orbitor Drive
  Mississauga, Ontario, L4W 4Z5

REPORTING SAFETY DEFECTS (US only)

If you believe that your vehicle has a defect which could cause a crash or could cause injury or death, you should immediately inform the National Highway Traffic Safety Administration (NHTSA) in addition to notifying INFINITI.

If NHTSA receives similar complaints, it may open an investigation, and if it finds that a safety defect exists in a group of vehicles, it may order a recall and remedy campaign. However, NHTSA cannot become involved in individual problems between you, your dealer, or INFINITI.

To contact NHTSA, you may call the Vehicle Safety Hotline toll-free at 1-888-327-4236 (TTY: 1-800-424-9153); go to http://www.safercar.gov; or write to: Administrator, NHTSA, 400 Seventh Street, SW., Washington, D.C. 20590. You can also obtain other information about motor vehicle safety from http://www.safercar.gov.

You may notify INFINITI by contacting our Consumer Affairs Department, toll-free, at 1-800-662–6200.

READINESS FOR INSPECTION/ MAINTENANCE (I/M) TEST

Due to legal requirements in some states and Canadian Provinces, your vehicle may be required to be in what is called the “ready condition” for an Inspection/Maintenance (I/M) test of the emission control system.

The vehicle is set to the “ready condition” when it is driven through certain driving patterns. Usually, the ready condition can be obtained by ordinary usage of the vehicle.

If a powertrain system component is repaired or the battery is disconnected, the vehicle may be reset to a “not ready” condition. Before taking the I/M test, check the vehicle’s inspection/ maintenance test readiness condition. Turn the ignition switch ON without starting the engine. If the Malfunction Indicator Light (MIL) comes on steady for 20 seconds and then blinks for 10 seconds , the I/M test condition is “not ready”. If the MIL does not blink after 20 seconds, the I/M test condition is “ready”. If the MIL indicates the vehicle is in a “not ready” condition, drive the vehicle through the following pattern to set the vehicle to the ready condition. If you cannot or do not want to perform the driving pattern, an INFINITI dealer can conduct it for you.

⚠ WARNING

Always drive the vehicle in a safe and prudent manner according to traffic conditions and obey all traffic laws.

1. Start the engine when the engine coolant temperature gauge needle points to C. Allow the engine to idle until the gauge needle points between the C and H (normal operating temperature).
2. Accelerate the vehicle to 55 MPH (88 km/h), then quickly release the accelerator pedal completely and keep it released for at least 10 seconds.
3. Quickly depress the accelerator pedal for a moment, then drive the vehicle at a speed of 53 - 60 MPH (86 - 96 km/h) for at least 9 minutes.
4. Stop the vehicle.
5. Accelerate the vehicle to 35 MPH (55 km/h) and maintain the speed for 20 seconds.
6. Repeat steps 4 through 5 at least 10 times.
7. Accelerate the vehicle to 55 MPH (88 km/h) and maintain the speed for at least 3 minutes.
8. Stop the vehicle. Place the transmission selector lever in the P (Park) or N (Neutral) position.
9. Turn the engine off.
10. Repeat steps 1 - 8 at least one more time.

If steps 1 through 7 are interrupted, repeat the preceding step. Any safe driving mode is acceptable between steps. Do not stop the engine until step 7 is completed.

EVENT DATA RECORDERS (EDR)

This vehicle is equipped with an Event Data Recorder (EDR). The main purpose of an EDR is to record, in certain crash or near crash-like situations, such as an air bag deployment or hitting a road obstacle, data that will assist in understanding how a vehicle's systems performed. The EDR is designed to record data related to vehicle dynamics and safety systems for a short period of time, typically 30 seconds or less. The EDR in this vehicle is designed to record such data as:

- How various systems in your vehicle were operating;
- Whether or not the driver and passenger safety belts were buckled/fastened;
- How far (if at all) the driver was depressing the accelerator and/or brake pedal; and,
- How fast the vehicle was traveling.
- Sounds are not recorded.

These data can help provide a better understanding of the circumstances in which crashes and injuries occur. NOTE: EDR data are recorded by your vehicle only if a nontrivial crash situation occurs; no data are recorded by the EDR under normal driving conditions and no personal data (e.g. name, gender, age and crash location) are recorded. However, other parties, such as law enforcement, could combine the EDR data with the type of personally identifying data routinely acquired during a crash investigation.

To read data recorded by an EDR, special equipment is required and access to the vehicle or the EDR is needed. In addition to the vehicle manufacturer and INFINITI dealer, other parties, such as law enforcement, that have the special equipment, can read the information if they have access to the vehicle or the EDR. EDR data will only be accessed with the consent of the vehicle owner or lessee or as otherwise required or permitted by law.

OWNER'S MANUAL/SERVICE MANUAL ORDER INFORMATION

A genuine INFINITI Service Manual is the best source of service and repair information for your vehicle. Filled with wiring diagrams, illustrations and step-by-step diagnostic and adjustment procedures, this manual is the same one used by the factory-trained technicians working at INFINITI dealerships. Also available are genuine INFINITI Owner's Manuals, and genuine INFINITI Service and Owner's Manuals for older INFINITI models.

For USA

For current pricing and availability of genuine **INFINITI Service Manuals** for the 2000 model year and later contact:

Tweddle Group
1-800-450-9491
www.nissan-techinfo.com/infiniti

For current pricing and availability of genuine **INFINITI Service Manuals** for the 1999 model year and prior, see an INFINITI dealer, or contact:

Resolve Corporation
20770 Westwood Road
Strongsville, OH 44136
1-800-247-5321

For current pricing and availability of genuine **INFINITI Owner's Manuals** for this model year and prior, see an INFINITI dealer, or contact:

Resolve Corporation
20770 Westwood Road
Strongsville, OH 44136
1-800-247-5321

For Canada

To purchase a copy of a genuine INFINITI Service Manual or Owner's Manual please contact your nearest INFINITI dealer. For the phone number and location of an INFINITI dealer in your area call the INFINITI Satisfaction Center at 1-800-361-4792 and a bilingual INFINITI representative will assist you.

Also available are genuine INFINITI Service and Owner's Manuals for older INFINITI models.

IN THE EVENT OF A COLLISION

Unfortunately, accidents do occur. In this unlikely event, there is some important information you should know.

Many insurance companies routinely authorize the use of non-genuine collision parts in order to cut costs, among other reasons.

Insist on the use of genuine INFINITI collision parts!

If you want your vehicle to be restored using parts made to INFINITI's original exacting specifications – if you want to help it to last and hold its resale value, the solution is simple. **Tell your insurance agent and your repair shop to only use Genuine INFINITI Collision Parts.** INFINITI does not warrant non-INFINITI parts, nor does INFINITI's warranty apply to damage caused by a non-genuine part.

Using Genuine INFINITI Parts can help protect your personal safety, preserve your warranty protection and maintain the resale value of your vehicle. And if your vehicle was leased, using Genuine INFINITI Parts may prevent or limit unnecessary excess wear and tear expenses at the end of your lease.

INFINITI designs its hoods with crumple zones to minimize the risk that the hood will penetrate the windshield of your vehicle in an accident. Non-genuine (imitation) parts may not provide such built-in safeguards. Also, non-genuine parts often show premature wear, rust and corrosion.

Why should you take a chance?

In over 40 states, the law says you must be advised if non-genuine parts are used to repair your vehicle. And some states have enacted laws that restrict insurance companies from authorizing the use of non-genuine collision parts during the new vehicle warranty. These laws help protect you, so you can take action to protect yourself.

It's your right!

If you should need further information visit us at:

www.infiniti.com (for U.S. customers) or
www.infiniti.ca (for Canadian customers).

MEMO

10 Index

4WD warning light 2-13

A

Active Head Restraint 1-8
Adjusting pedal position 3-23
Aiming control, headlights 2-28
Air bag (See supplemental restraint system) 1-48
Air bag system
  Front (See supplemental front impact air bag system) 1-56
Air bag warning labels 1-63
Air bag warning light. 1-63, 2-15
Air cleaner housing filter 8-17
Air conditioner
  Air conditioner service 4-25
  Air conditioner specification label 9-11
  Air conditioner system refrigerant and oil recommendations 9-6
  Heater and air conditioner controls 4-22
  Rear seat air conditioner 4-24
  Servicing air conditioner 4-25
Alarm system
(See vehicle security system) 2-21
Anchor point locations 1-30
Antenna 4-53
Anti-lock brake warning light. 2-11
Anti-lock Braking System (ABS). 5-50
Audible reminders. 2-17
Audio system 4-25
  Compact disc (CD) player 4-36
Audio System
  CompactFlash (CF) player 4-38
Audio system
  FM/AM/SAT radio with compact disc (CD) player 4-33
Audio System
  Music Box hard-disk drive audio system 4-40
Audio system
  Radio 4-25
  Rear audio controls. 4-52
Audio System
  Settings 4-33
Audio system
  Steering wheel audio control switch. . . .4-50
Autolight switch. 2-26
Automatic
  Automatic drive positioner 3-26
  Automatic power window switch 2-50
  Automatic transmission position indicator light 2-20
  Driving with automatic transmission 5-13
  Transmission selector lever lock release. 5-15
Automatic anti-glare inside mirror 3-24
AUX jack. 4-38

B

Battery. 8-13
  Charge warning light 2-12
Before starting the engine 5-11
Belt (See drive belt) 8-15
Block heater
  Engine 5-56
Bluetooth® hands-free phone system 4-69
Booster seats 1-43
Brake
  Anti-lock Braking System (ABS). 5-50
  Brake assist (for Intelligent cruise control system) 5-38
  Brake fluid 8-12
  Brake light (See stop light). 8-28
  Brake system 5-49
  Brake warning light 2-11
  Brake wear indicators 2-17, 8-22
  Parking brake operation 5-16
  Self-adjusting brakes 8-22
Brakes 8-22
Break-in schedule. 5-40
Brightness control
  Instrument panel 2-29
Brightness/contrast button. 4-18
Bulb check/instrument panel. 2-10
Bulb replacement 8-28

C

Capacities and recommended fuel/lubricants. 9-2
Captain's chair adjustment (2nd row). 1-4

Car phone or CB radio 4-69
Cargo light 2-55
Cargo net 2-46
Cargo (See vehicle loading information) . . .9-12
CD care and cleaning 4-49
CD player (See audio system) 4-36
Child restraint with top tether strap 1-30
Child restraints 1-18, 1-26, 1-28
Precautions on child restraints. 1-26, 1-37, 1-43
Top tether strap anchor point locations . .1-30
Child safety rear door lock. 3-6
Chimes, audible reminders. 2-17
Cigarette lighter. 2-36
Cleaning exterior and interior 7-2
Clock 2-35, 4-34
(models with navigation system). 4-13
Clock set 4-13
C.M.V.S.S. certification label. 9-10
Cold weather driving 5-54
Compact disc (CD) player 4-36
CompactFlash (CF) player 4-38
Compass display 2-7
Console box 2-37, 2-43
Control panel buttons 4-2
Brightness/contrast button. 4-18
Enter button. 4-2
Setting button. 4-11
Startup screen 4-5
Controls
Audio controls (steering wheel) 4-50
Heater and air conditioner controls 4-22
Rear audio controls. 4-52
Rear seat air conditioner 4-24
Coolant
Capacities and recommended fuel/lubricants. 9-2
Changing engine coolant 8-8
Checking engine coolant level. 8-7
Engine coolant temperature gauge 2-5
Corrosion protection 7-5
Cruise control 5-17
Cup holders 2-41
Curtain side-impact and rollover air bag . . .1-60

D

Daytime running light system (Canada only) 2-28
Defroster switch
Rear window and outside mirror defroster switch 2-25
Digital video disc DVD 4-53
Dimensions and weights. 9-8
Dimmer switch for instrument panel 2-29
Display controls (see control panel buttons) . .4-2
Distance to empty 4-7
Door locks 3-3
Drive belt 8-15
Drive positioner, Automatic. 3-26
Driving
Cold weather driving 5-54
Driving with automatic transmission 5-13
Precautions when starting and driving . . .5-2

E

Economy - fuel 5-40
Emission control information label 9-10
Emission control system warranty 9-30
Engine
Before starting the engine 5-11
Block heater. 5-56
Capacities and recommended fuel/lubricants. 9-2
Changing engine coolant 8-8
Changing engine oil 8-9
Changing engine oil filter. 8-10
Checking engine coolant level. 8-7
Checking engine oil level 8-8
Engine compartment check locations. . . .8-6
Engine coolant temperature gauge 2-5
Engine cooling system 8-7
Engine oil 8-8
Engine oil and oil filter recommendation . .9-5
Engine oil viscosity 9-5
Engine serial number 9-10
Engine specifications. 9-7
Starting the engine 5-11
Engine oil pressure gauge 2-6
Engine oil pressure low/engine coolant temperature high warning light. 2-12
Enter button. 4-2
Event data recorders 9-32
Exhaust gas (Carbon monoxide) 5-2
Eyeglass case. 2-38

F

Flashers
(See hazard warning flasher switch). 2-30
Flat tire 6-2
Floor mat positioning aid. 7-4

Fluid
Brake fluid 8-12
Capacities and recommended fuel/lubricants. 9-2
Engine coolant 8-7
Engine oil 8-8
Power steering fluid. 8-11
Window washer fluid 8-12
F.M.V.S.S. certification label 9-10
Fog light switch 2-30
Front air bag system (See supplemental restraint system) 1-56
Front seats 1-2
Front sonar system. 2-33, 5-53
Fuel
Capacities and recommended fuel/lubricants. 9-2
Fuel economy 5-40
Fuel gauge 2-6
Fuel octane rating 9-4
Fuel recommendation 9-3
Fuel-filler door and cap. 3-21
Fuses 8-22
Fusible links 8-24

G

Garage door opener, HomeLink® Universal Transceiver 2-55
Gas cap 3-21
Gauge
Engine coolant temperature gauge 2-5
Engine oil pressure gauge 2-6
Fuel gauge 2-6
Odometer 2-4
Speedometer 2-4
Tachometer 2-5
Trip odometer 2-4
Voltmeter 2-7
General maintenance 8-2
Glass hatch 3-20
Glove box 2-38
Glove box lock 2-38

H

Hands-free phone system, Bluetooth® 4-69
Hazard warning flasher switch 2-30
Head restraints 1-7
Active Head Restraint 1-8
Headlight and turn signal switch. 2-25
Headlight control switch 2-26
Headlights. 8-27
Headlights, aiming control 2-28
Headphones (See INFINITI mobile entertainment system) 4-57
Heated seats 2-31
Heated steering wheel 2-32
Heater
Heater and air conditioner controls 4-22
Heater operation 4-23
Rear seat air conditioner 4-24
HomeLink® Universal Transceiver 2-55
Hood release 3-16
Hook
Luggage hook. 2-45
Horn 2-31

I

Ignition switch 5-9
Immobilizer system 3-3, 5-10
Important vehicle information label. 9-10
In-cabin microfilter 8-17
Increasing fuel economy 5-40
Indicator lights and audible reminders (See warning/indicator lights and audible reminders) 2-10
INFINITI mobile entertainment system (MES) 4-53
INFINITI vehicle immobilizer system. 2-22, 3-3, 5-10
INFINITI voice recognition system 4-80
Inside automatic anti-glare mirror 3-24
Instrument brightness control 2-29
Instrument panel 0-6, 2-2
Instrument panel dimmer switch 2-29
Intelligent cruise control (ICC) system
Brake assist 5-38
Intelligent Key system 3-6
Key operating range 3-8
Key operation 3-9
Mechanical key 3-2
Remote keyless entry operation 3-12
Troubleshooting guide 3-15
Warning signals. 3-15
Interior light 2-53
ISOFIX child restraints 1-28

J

Jump starting 6-8

K

Keyfob battery replacement 8-25
Keyless entry
With Intelligent Key system
(See Intelligent Key system) 3-12
Keys, For Intelligent Key system 3-2

L

Labels
Air conditioner specification label 9-11
C.M.V.S.S. certification label 9-10
Emission control information label 9-10
Engine serial number 9-10
F.M.V.S.S. certification label 9-10
Tire and Loading Information label. 9-11
Vehicle identification number (VIN) plate . .9-9
Warning labels (for SRS). 1-63
LATCH (Lower Anchors and Tethers for CHildren)
System. 1-28
License plate
Installing the license plate 9-11
Lift gate 3-16
Lift gate release 3-20
Light
Air bag warning light. 1-63, 2-15
Brake light (See stop light). 8-28
Bulb check/instrument panel. 2-10
Bulb replacement 8-28
Charge warning light 2-12
Fog light switch 2-30
Headlight and turn signal switch. 2-25
Headlight control switch 2-26
Headlights. 8-27
Interior light 2-53
Light bulbs. 8-27
Low tire pressure warning light 2-13
Low washer fluid warning light. 2-20
Passenger air bag and status light. 1-57
Personal lights 2-54
Security indicator light 2-16
Warning/indicator lights and audible
reminders 2-10
Lights
Map lights 2-55
Lock
Child safety rear door lock. 3-6
Door locks 3-3
Glove box lock 2-38
Lift gate release 3-20
Power door locks. 3-5
Vehicle speed sensing door lock
mechanism 3-5
Low fuel warning light 2-13, 2-14, 2-20
Low tire pressure warning light 2-13
Low washer fluid warning light. 2-20
Luggage hook. 2-45
Luggage rack (see roof rack) 2-47
Luggage (See vehicle loading information) . .9-12
Luggage storage
(see vehicle loading information). 2-44

M

Maintenance
Changing the maintenance interval 4-9
Displaying the maintenance notice
reminder 4-10
General maintenance 8-2
Inside the vehicle 8-3
Maintenance precautions 8-5
Outside the vehicle. 8-2
Resetting the maintenance interval 4-10
Seat belt maintenance 1-26
Setting 4-9
Under the hood and vehicle 8-4
Malfunction indicator light 2-16
Map lights 2-55
Map pocket 2-39
Meters and gauges. 2-3
Instrument brightness control 2-29
Mirror
Automatic anti-glare inside mirror 3-24
Outside mirror control 3-25
Outside mirrors 3-25
Vanity mirror 3-24
Moonroof 2-51
Music Box hard-disk drive audio system . . .4-40

O

Octane rating (See fuel octane rating) 9-4
Odometer 2-4
Oil
Capacities and recommended
fuel/lubricants. 9-2
Changing engine oil 8-9
Changing engine oil filter. 8-10
Checking engine oil level 8-8
Engine oil 8-8
Engine oil and oil filter recommendation . .9-5
Engine oil pressure low/engine coolant
temperature high warning light. 2-12

Engine oil viscosity 9-5
Outside mirror control 3-25
Outside mirrors 3-25
Overheat
If your vehicle overheats 6-10
Owner's manual order form 9-32
Owner's manual/service manual order information. 9-32

P

Parking
Parking brake operation 5-16
Parking/parking on hills. 5-48
Pedal position adjustment 3-23
Personal lights 2-54
Phone, Bluetooth® hands-free system 4-69
Power
Power door locks. 3-5
Power outlet. 2-35
Power rear windows 2-50
Power steering fluid. 8-11
Power steering system 5-49
Power vent windows 2-51
Power windows 2-48
Rear power windows 2-50
Precautions
Maintenance precautions 8-5
On-pavement and off-road driving precautions 5-3
Precautions on child restraints. 1-26, 1-37, 1-43
Precautions on seat belt usage 1-15
Precautions on supplemental restraint system 1-48
Precautions when starting and driving . . .5-2
Pre-tensioner seat belt system. 1-61
Programmable features. 4-11
Push starting 6-10

R

Radio
Car phone or CB radio 4-69
FM/AM/SAT radio with compact disc (CD) player 4-33
Rear audio controls. 4-52
Steering wheel audio control switch. . . .4-50
Readiness for inspection maintenance (I/M) test. 9-31
Rear audio controls. 4-52
Rear center seat belt 1-22
Rear power windows 2-50
Rear seat air conditioner 4-24
Rear sonar system 5-52
Rear sonar system off switch 2-33
Rear view monitor. 4-18
Rear window and outside mirror defroster switch 2-25
Rear window wiper and washer switches. . .2-24
Recorders
Event data 9-32
Refrigerant recommendation 9-6
Registering your vehicle in another country. . .9-9
Remote controller (See INFINITI mobile entertainment system) 4-56
Reporting safety defects (US only) 9-30
Resetting the fuel economy 4-7
Roof rack 2-47

S

Safety
Child safety rear door lock. 3-6
Child seat belts 1-26, 1-37, 1-43
Reporting safety defects (US only) 9-30
Screen (See INFINITI mobile entertainment system) 4-56
Seat adjustment
Front power seat adjustment 1-3
Second row bench seats 1-5
Second row captain's chair 1-4
Third row power folding seats 1-14
Seat belt
Child safety 1-18
Infants and small children 1-18
Injured Person. 1-19
Larger children 1-18
Precautions on seat belt usage 1-15
Pregnant women 1-19
Pre-tensioner seat belt system. 1-61
Rear center seat belt 1-22
Seat belt extenders 1-25
Seat belt maintenance 1-26
Seat belts 1-15
Shoulder belt height adjustment. 1-25
Three-point type with retractor. 1-19
Seat belt warning light 2-15
Seatback pockets. 2-39
Seats
Adjustment 1-2
Automatic drive positioner 3-26
Front seats 1-2
Heated seats 2-31
Second row captain's chair adjustment. 1-4

Security indicator light 2-16
Security system
(INFINITI vehicle immobilizer system), engine start 2-22, 3-3, 5-10
Self-adjusting brakes 8-22
Service manual order form 9-32
Servicing air conditioner 4-25
Setting button 4-11
Shift lock release 5-15
Shifting
Automatic transmission 5-14
Shoulder belt height adjustment 1-25
Side air bag system (See supplemental side air bag, curtain and rollover air bag systems). . .1-60
Sonar
Front system 2-33, 5-53
Rear system 5-52
Spark plug replacement 8-16
Speedometer 2-4
SRS warning label 1-63
Starting
Before starting the engine 5-11
Jump starting 6-8
Precautions when starting and driving . . .5-2
Push starting 6-10
Starting the engine 5-11
Startup screen 4-5
Steering
Heated steering wheel 2-32
Power steering fluid. 8-11
Power steering system 5-49
Tilting steering wheel 3-22
Steering wheel audio control switch. 4-50
Stop light 8-28
Storage 2-37
Overhead storage compartment 2-40
Storage bin 2-40, 2-44
Sun visors 3-23
Sunglasses case 2-38
Sunglasses holder 2-38
Sunroof (see Moonroof) 2-51
Supplemental air bag warning labels 1-63
Supplemental air bag warning light. . .1-63, 2-15
Supplemental front impact air bag system . .1-56
Supplemental restraint system
Information and warning labels. 1-63
Precautions on supplemental restraint system 1-48
Supplemental restraint system (Supplemental air bag system). 1-48
Switch
Autolight switch 2-26
Automatic power window switch 2-50
Fog light switch 2-30
Hazard warning flasher switch 2-30
Headlight aiming control 2-28
Headlight and turn signal switch. 2-25
Headlight control switch 2-26
Ignition switch 5-9
Power door lock switch 3-5
Rear sonar system off switch 2-33
Rear window and outside mirror defroster switch 2-25
Rear window wiper and washer switches 2-24
Turn signal switch. 2-29
Vehicle dynamic control (VDC) off switch 2-32
Windshield wiper and washer switch . . .2-23

T

Tachometer 2-5
Temperature gauge
Engine coolant temperature gauge 2-5
Engine oil pressure low/engine coolant temperature high warning light. 2-12
Theft
(INFINITI vehicle immobilizer system), engine start 2-22, 3-3, 5-10
Third row power folding seats 1-14
Three-way catalyst 5-2
Tilting steering wheel 3-22
Tire
Flat tire 6-2
Spare tire 6-3
Tire and Loading Information label. 9-11
Tire chains. 8-39
Tire placard 9-11
Tire pressure 8-32
Tire rotation 8-39
Tires of 4-wheel drive. 8-41
Types of tires 8-38
Uniform tire quality grading. 9-29
Wheels and tires 8-32
Wheel/tire size 9-8
Tire pressure
Low tire pressure warning light 2-13
Tire pressure display 4-8
Tire Pressure Monitoring System (TPMS) . . .5-3
Tire rotation maintenance reminder 4-8
Top tether strap child restraint 1-30
Tow mode switch 2-34

Towing
2-wheel drive models 6-12
4-wheel drive models 6-13
Flat towing 9-28
Tow truck towing 6-11
Towing load/specification 9-19
Trailer towing 9-16
Transceiver
HomeLink® Universal Transceiver 2-55
Transmission
Driving with automatic transmission 5-13
Selector lever lock release 5-15
Travel (See registering your vehicle in another country) 9-9
Trip odometer 2-4
Turn signal switch 2-29

U

Uniform tire quality grading 9-29

V

Vanity mirror 3-24
Vehicle
Speed sensing door lock mechanism 3-5
Vehicle dimensions and weights 9-8
Vehicle dynamic control (VDC) off switch . . .2-32
Vehicle dynamic control (VDC) system 5-51
Vehicle electronic system 4-14
Vehicle identification 9-9
Vehicle identification number (VIN) (Chassis number) 9-9
Vehicle identification number (VIN) plate 9-9
Vehicle loading information 9-12
Vehicle recovery 6-13, 6-14
Vehicle security system 2-21
(INFINITI vehicle immobilizer system), engine start 2-22, 3-3, 5-10
Ventilators 4-21
Visors 3-23
Voice recognition system 4-80
Voltmeter 2-7

W

Warning
4WD warning light 2-13
Air bag warning light 1-63, 2-15
Anti-lock brake warning light 2-11
Battery charge warning light 2-12
Brake warning light 2-11
Engine oil pressure low/engine coolant temperature high warning light 2-12
Hazard warning flasher switch 2-30
Low fuel warning light 2-13, 2-14, 2-20
Low tire pressure warning light 2-13
Low washer fluid warning light 2-20
Passenger air bag and status light 1-57
Seat belt warning light 2-15
Vehicle security system 2-21
Warning labels (for SRS) 1-63
Warning/indicator lights and audible reminders 2-10
Warning lights 2-10
Washer switch
Rear window wiper and washer switches 2-24
Windshield wiper and washer switch . . .2-23
Weights (See dimensions and weights) 9-8
Wheels and tires 8-32
Wheel/tire size 9-8
When traveling or registering your vehicle in another country 9-9
Window washer fluid 8-12
Windows
Locking passengers' windows 2-49
Power rear windows 2-50
Power vent windows 2-51
Power windows 2-48
Rear power windows 2-50
Windshield wiper and washer switch 2-23
Wiper
Rear window wiper and washer switches 2-24
Windshield wiper and washer switch . . .2-23
Wiper blades 8-19

RECOMMENDED FUEL:

INFINITI recommends the use of premium unleaded gasoline with an octane rating of at least 91 AKI (Anti-Knock Index) number (Research octane number 96). If unleaded premium gasoline is not available, you may use unleaded regular gasoline with an octane rating of at least 87 AKI number (Research octane number 91), but you may notice a decrease in performance.

⚠ CAUTION

- **Using a fuel other than that specified could adversely affect the emission control system, and may also affect the warranty coverage.**
- **Under no circumstances should a leaded gasoline be used, because this will damage the three-way catalyst.**
- **Do not use E-85 fuel in your vehicle. Your vehicle is not designed to run on E-85 fuel. Using E-85 fuel can damage the fuel system components and is not covered by the INFINITI vehicle limited warranty.**

For additional information, see “Capacities and recommended fuel/lubricants in the “Technical and consumer information” section.

RECOMMENDED ENGINE OIL:

- Engine oil with API Certification Mark
- Viscosity 5W-30

See “Engine oil and oil filter recommendation” in the “Technical and consumer information” section of this manual.

COLD TIRE PRESSURE:

See Tire and Loading Information label.

The label is typically located on the driver side center pillar or on the driver’s door. For additional information, see “Wheels and tires” in the “Maintenance and do-it-yourself” section.

RECOMMENDED NEW VEHICLE BREAK-IN PROCEDURE:

During the first 1,200 miles (2,000 km) of vehicle use, follow the recommendations outlined in the “BREAK-IN SCHEDULE” information found in the “Starting and driving” section of this manual. Follow these recommendations for the future reliability and economy of your new vehicle. Failure to follow these recommendations may result in vehicle damage or shortened engine life.