For your safety, read carefully and keep in this vehicle.

2016 Infiniti QX60 | Owner's Manual

INFINITI®

FOREWORD

An INFINITI represents a new way of thinking about vehicle design. It integrates advanced engineering and superior craftsmanship with a simple, refined aesthetic sensitivity associated with traditional Japanese culture.

The result is a different notion of luxury and beauty. The car itself is important, but so is the sense of harmony that the vehicle evokes in its driver, and the sense of satisfaction you feel with the INFINITI — from the way it looks and drives to the high level of retailer service.

To ensure that you enjoy an INFINITI to the fullest, we encourage you to read this Owner's Manual immediately. It explains all of the features, controls and performance characteristics of an INFINITI; it also provides important instructions and safety information.

A separate Warranty Information Booklet is included in your Owner's literature portfolio. The INFINITI Service and Maintenance Guide explains details about maintaining and servicing your vehicle. Always carry it with you when you take your vehicle to an INFINITI retailer. The Warranty Information Booklet contents provide complete information about all warranties covering this vehicle, the requirements to keep the warranties in effect as well as the INFINITI Roadside Assistance program.

Additionally, a separate Customer Care and Lemon Law Information Booklet will explain how to resolve any concerns you may have with your vehicle, as well as clarify your rights under your state's lemon law.

In addition to factory-installed options, your vehicle may also be equipped with additional accessories installed prior to delivery. It is recommended that you visit an INFINITI retailer for this service. It is important that you familiarize yourself with all disclosures, warnings, cautions and instructions concerning proper use of such accessories prior to operating the vehicle and/or accessory. It is recommended that you visit an INFINITI retailer for details concerning the particular accessories with which your vehicle is equipped.

READ FIRST—THEN DRIVE SAFELY

Before driving your vehicle, please read this Owner's Manual carefully. This will ensure familiarity with controls and maintenance requirements, assisting you in the safe operation of your vehicle.

⚠ WARNING

IMPORTANT SAFETY INFORMATION REMINDERS!

Follow these important driving rules to help ensure a safe and comfortable trip for you and your passengers!

- **NEVER drive under the influence of alcohol or drugs.**
- **ALWAYS observe posted speed limits and never drive too fast for conditions.**
- **ALWAYS give your full attention to driving and avoid using vehicle features or taking other actions that could distract you.**
- **ALWAYS use your seat belts and appropriate child restraint systems. Pre-teen children should be seated in the rear seat.**
- **ALWAYS provide information about the proper use of vehicle safety features to all occupants of the vehicle.**
- **ALWAYS review this Owner's Manual for important safety information.**

For descriptions specified for all-wheel drive models, an **AWD** mark is placed at the beginning of the applicable sections/items.

As with other vehicles with features for off-road use, failure to operate all-wheel drive models correctly may result in loss of control or an accident. Be sure to read "Driving safety precautions" in the "Starting and driving" section of this manual.

ON-PAVEMENT AND OFF-ROAD DRIVING

This vehicle will handle and maneuver differently from an ordinary passenger car because it has a higher center of gravity for off-road use. As with other vehicles with features of this type, failure to operate this vehicle correctly may result in loss of control or an accident.

For additional information, refer to "On-pavement and off-road driving precautions", "Avoiding collision and rollover" and "Driving safety precautions" in the "Starting and driving" section of this manual.

MODIFICATION OF YOUR VEHICLE

This vehicle should not be modified. Modification could affect its performance, safety or durability and may even violate governmental regulations. In addition, damage or performance problems resulting from modifications may not be covered under INFINITI warranties.

This manual includes information for all features and equipment available on this model. Features and equipment in your vehicle may vary depending on model, trim level, options selected, order, date of production, region or availability. Therefore, you may find information about features or equipment that are not included or installed on your vehicle.

All information, specifications and illustrations in this manual are those in effect at the time of printing. INFINITI reserves the right to change specifications, performance, design or component suppliers without notice and without obligation. From time to time, INFINITI may update or revise this manual to provide Owners with the most accurate information currently available. Please carefully read and retain with this manual all revision updates sent to you by INFINITI to ensure you have access to accurate and up-to-date information regarding your vehicle. Current versions of vehicle Owner's Manuals and any updates can also be found in the Owner section of the INFINITI website at **https://owners.infinitiusa.com/owners/navigation/manualsandGuides**. If you have questions concerning any information in your Owner's Manual, contact INFINITI Consumer Affairs. See the INFINITI CUSTOMER CARE PROGRAM page in this Owner's Manual for contact information.

IMPORTANT INFORMATION ABOUT THIS MANUAL

You will see various symbols in this manual. They are used in the following ways:

⚠ WARNING

This is used to indicate the presence of a hazard that could cause death or serious personal injury. To avoid or reduce the risk, the procedures must be followed precisely.

⚠ CAUTION

This is used to indicate the presence of a hazard that could cause minor or moderate personal injury or damage to your vehicle. To avoid or reduce the risk, the procedures must be followed carefully.

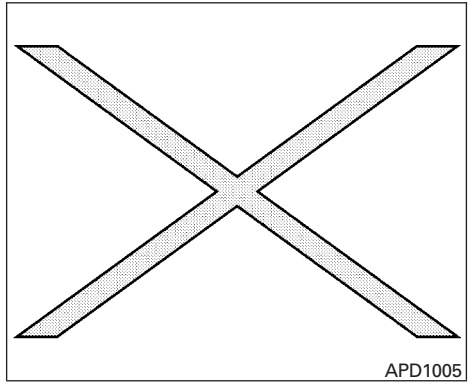

If you see this symbol, it means **"Do not do this"** or **"Do not let this happen."**

If you see a symbol similar to these in an illustration, it means the arrow points to the front of the vehicle.

Arrows in an illustration that are similar to these indicate movement or action.

Arrows in an illustration that are similar to these call attention to an item in the illustration.

CALIFORNIA PROPOSITION 65 WARNING

⚠ WARNING

Engine exhaust, some of its constituents, and certain vehicle components contain or emit chemicals known to the State of California to cause cancer and birth defects or other reproductive harm. In addition, certain fluids contained in vehicles and certain products of component wear contain or emit chemicals known to the State of California to cause cancer and birth defects or other reproductive harm.

CALIFORNIA PERCHLORATE ADVISORY

Some vehicle parts, such as lithium batteries, may contain perchlorate material. The following advisory is provided: "Perchlorate Material – special handling may apply, See www.dtsc.ca.gov/hazardouswaste/perchlorate/".

Bluetooth®

BLUETOOTH® is a trademark owned by Bluetooth SIG, Inc. and licensed to Visteon and Clarion.

SiriusXM® services require a subscription after trial period and are sold separately or as a package. The satellite service is available only in the 48 contiguous USA and DC. SiriusXM® satellite service is also available in Canada; see www.siriusxm.ca.

INFINITI®

© 2015 NISSAN NORTH AMERICA, INC.

All rights reserved. No part of this Owner's Manual may be reproduced or stored in a retrieval system, or transmitted in any form, or by any means, electronic, mechanical, photocopying, recording or otherwise, without the prior written permission of Nissan Motor Co., Ltd.

INFINITI CUSTOMER CARE PROGRAM

INFINITI CARES . . .

Both INFINITI and your INFINITI retailer are dedicated to serving all your automotive needs. Your satisfaction with your vehicle and your INFINITI retailer are our primary concerns. Your INFINITI retailer is always available to assist you with all your automobile sales and service needs.

However, if there is something that your INFINITI retailer cannot assist you with or you would like to provide INFINITI directly with comments or questions, please contact our (INFINITI's) Consumer Affairs Department using our toll-free number:

For U.S. customers
1-800-662-6200

For Canadian customers
1-800-361-4792

The Consumer Affairs Department will ask for the following information:

- Your name, address, and telephone number
- Vehicle identification number (on dash panel)
- Date of purchase
- Current odometer reading
- Your INFINITI retailer's name
- Your comments or questions

OR

You can write to INFINITI with the information on the left at:

For U.S. customers
INFINITI Division
Nissan North America, Inc.
Consumer Affairs Department
P.O. Box 685003
Franklin, TN 37068-5003
or via e-mail at:
nnaconsumeraffairs@nissan-usa.com

For Canadian customers
INFINITI Division
Nissan Canada Inc.
5290 Orbitor Drive
Mississauga, Ontario L4W 4Z5
or via e-mail at:
information.centre@nissancanada. com

If you prefer, visit us at:

www.infinitiUSA.com (for U.S. customers)

or

www.infiniti.ca (for Canadian customers)

We appreciate your interest in INFINITI and thank you for buying a quality INFINITI vehicle.

Table of Contents

Illustrated table of contents	0
Safety—Seats, seat belts and supplemental restraint system	1
Instruments and controls	2
Pre-driving checks and adjustments	3
Monitor, climate, audio, phone and voice recognition systems	4
Starting and driving	5
In case of emergency	6
Appearance and care	7
Maintenance and do-it-yourself	8
Technical and consumer information	9
Index	10

0 Illustrated table of contents

Air bags, seat belts and child restraints 0-2
Exterior front 0-3
Exterior rear. 0-4
Passenger compartment 0-5
Instrument panel. 0-6
Engine compartment check locations 0-8
Warning and indicator lights 0-9

AIR BAGS, SEAT BELTS AND CHILD RESTRAINTS

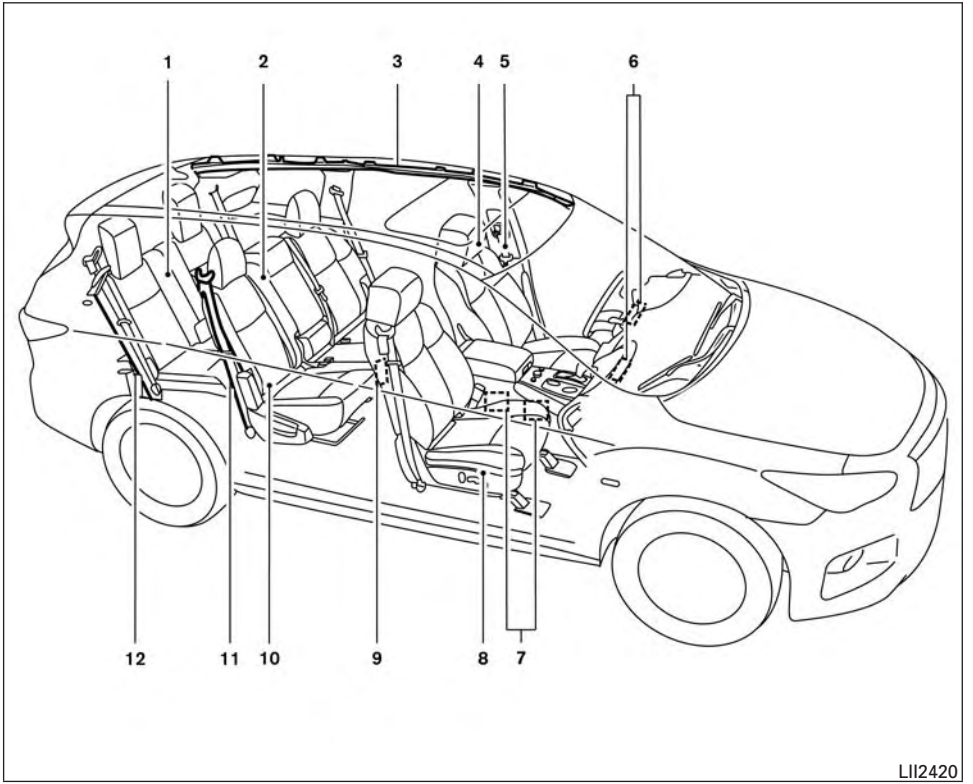

1. Folding 3rd row bench (P. 1-2)
2. Folding 2nd row bench (P. 1-2)
3. Roof-mounted curtain side-impact and rollover supplemental air bag (P. 1-49)
4. Head restraints/headrests (P.1-11)
5. Front seat belt with pretensioner(s) and shoulder height adjuster (P. 1-16, 1-49)
6. Supplemental air bags (P.1-49)
7. Occupant classification sensor (weight sensor) (P.1-49)
8. Front seats (P. 1-2)
9. Front seat-mounted side-impact supplemental air bag (P. 1-49)
10. LATCH (Lower Anchors and Tethers for CHildren) (P. 1-27)
11. 2nd row seat top tether strap anchor (located on bottom of seatback) (P. 1-27)
12. 3rd row bench seat top tether strap anchor (located on bottom of seatback) (P. 1-27)

Refer to the page number indicated in parentheses for operating details.

EXTERIOR FRONT

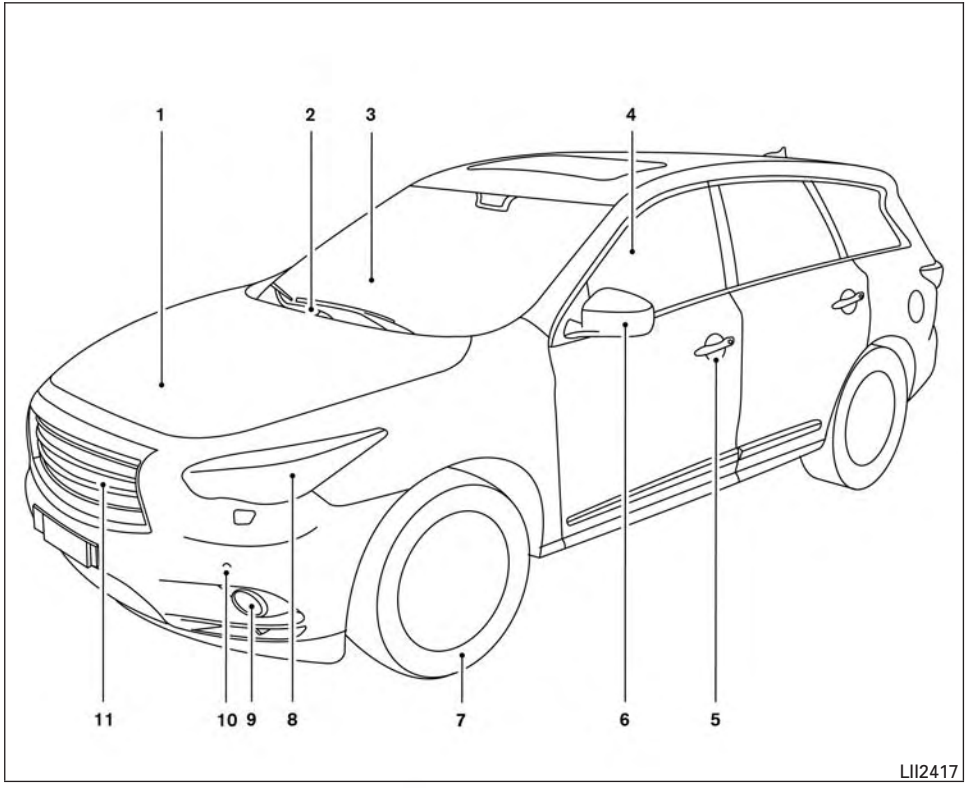

1. Engine hood (P. 3-21)
2. Wiper and washer switch (P. 2-32)
   Wiper blades (P. 8-19)
3. Windshield (P. 8-19)
4. Power windows (P. 2-58)
5. Door locks (P. 3-4)
   INFINITI Intelligent Key (P. 3-7)
   Remote engine start (if so equipped) (P. 3-19)
   Keys (P. 3-2)
6. Mirrors (P. 3-32)
   Side camera (if so equipped) (P. 4-30)
7. Tire pressure (P. 8-28)
   Flat tire (P. 6-3)
   Tire chains (P. 8-28)
8. Replacing bulbs (P. 8-26)
   Headlight and turn signal switch (P. 2-36)
9. Fog light switch (P. 2-36)
10. Sonar sensors (if so equipped) (P. 5-140)
11. Front camera (if so equipped) (P. 4-30)

See the page number indicated in parentheses for operating details.

EXTERIOR REAR

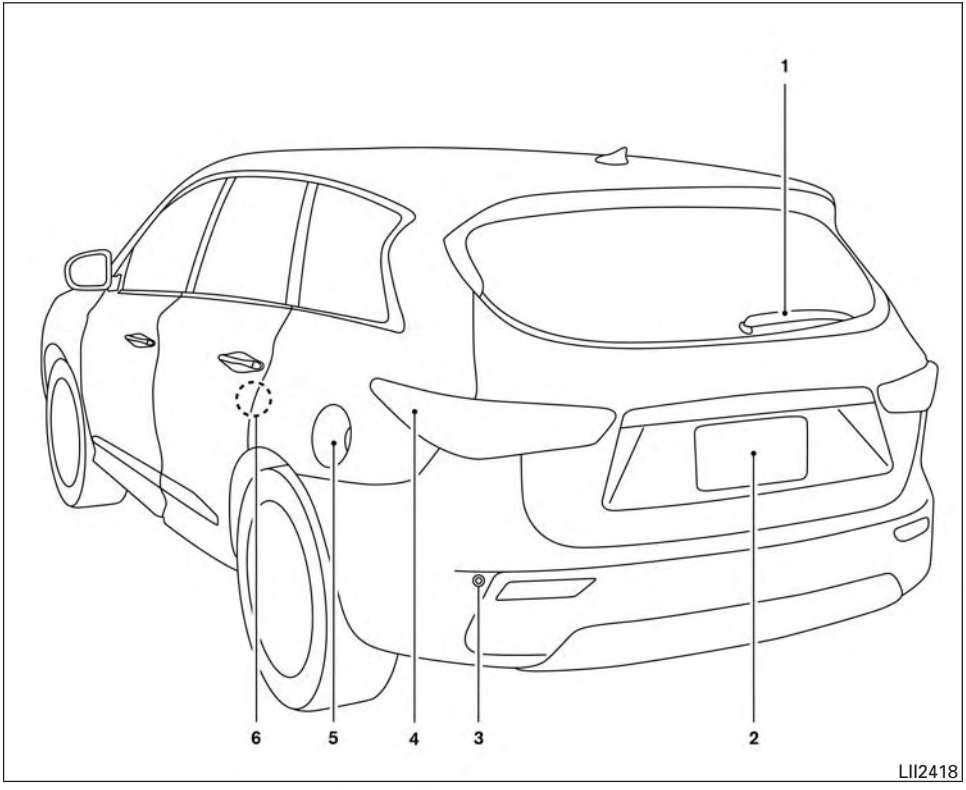

1. Rear wiper and washer switch (P. 2-32)
2. Liftgate release (P. 3-22)
   Rearview camera (P.4-23, 4-30)
3. Sonar sensors (if so equipped) (P. 5-140)
4. Replacing bulbs (P. 8-26)
5. Fuel-filler cap (P. 3-27)
   Fuel recommendation (P. 9-2)
   Fuel-filler door (P. 3-27)
6. Child safety rear door lock (P. 3-4)

Refer to the page number indicated in parentheses for operating details.

PASSENGER COMPARTMENT

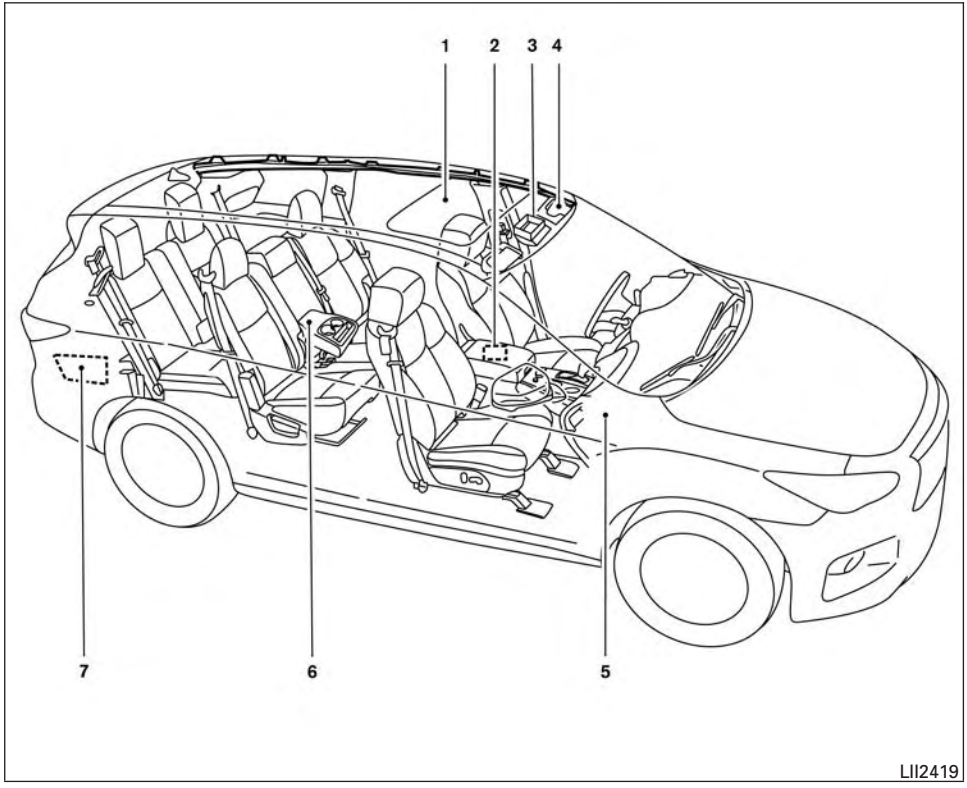

1. Power moonroof (P. 2-61)
   Panoramic sunshade (if so equipped) (P. 2-62)
2. Console box (P. 2-51)
3. Map lights (P. 2-65)
4. Sun visors (P. 3-31)
5. Glove box (P. 2-51)
6. Cup holders (P. 2-51)
7. Luggage hooks (P. 2-51)

Refer to the page number indicated in parentheses for operating details.

INSTRUMENT PANEL

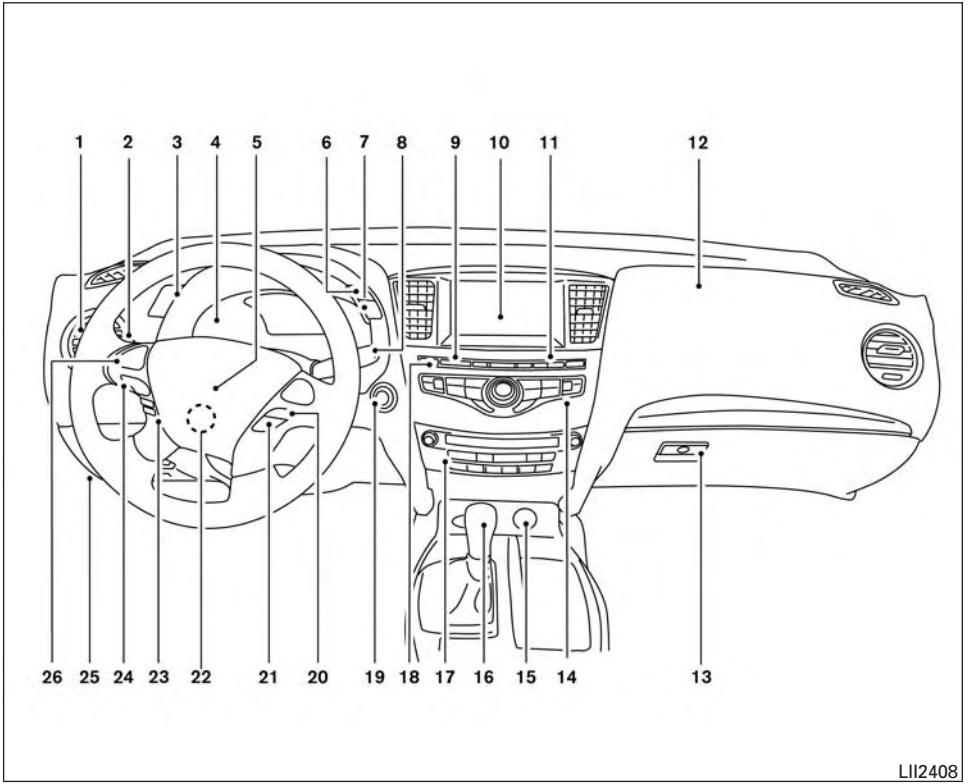

1. Vent (P. 4-47)
2. Headlight/fog light/turn signal switch (P. 2-40)
3. Instrument brightness control (P. 2-36)
4. Meters and gauges (P. 2-4)
   Warning and indicator lights (P. 2-8)
   Vehicle information display (P. 2-16)
5. Driver supplemental air bag (P.1-49)
   Horn (P. 2-41)
6. Back-up Collision Intervention (BCI) system switch (if so equipped) (P. 5-58)
7. Trip reset switch (P. 2-4)
8. Wiper and washer switch (P. 2-32)
   Rear wiper and washer switch (P. 2-32)
9. Rear window and outside mirror defroster switch (P. 2-36)
10. Center display (P. 4-4)
    Navigation system* (if so equipped) (P. 4-11)
11. Automatic heater and air conditioning controls (P. 4-48)
12. Front passenger supplemental air bag (P. 1-56)
13. Glove box (P. 2-52)

14. Center multi-function control buttons (P. 4-5, 4-12)
15. Power outlet (P. 2-48)
16. Shift lever (P. 5-18)
17. Audio system controls (P. 4-56)
    Front passenger air bag status light (P. 2-13)
18. Hazard warning flasher switch (P. 6-2)
19. Push-button ignition switch (P. 5-13)
20. Cruise control main/set switches (if so equipped) (P. 5-74)
    Intelligent Cruise Control (ICC) switches (if so equipped) (P. 5-76)
21. Dynamic Driver Assistance switch (if so equipped) (P. 5-95)
22. Tilt steering wheel control (P. 3-29)
23. Bluetooth® Hands-Free Phone System (P. 4-113, 4-127)
24. Steering wheel switch for audio control (P. 4-99)
25. Hood release (P. 3-21)
    Vehicle Dynamic Control (VDC) OFF switch (P. 2-47)
    Heated steering wheel switch (if so equipped) (P. 2-45)
    Headlight aiming control (P. 2-36)
    Warning Systems switch (if so equipped) (P. 2-46)
    Power inverter switch (if so equipped) (P. 2-47)
    Liftgate release switch (P. 3-22)
    Power liftgate main switch (P. 3-22)
    Front and rear sonar system switch (if so equipped) (P. 5-140)
26. Control panel and Vehicle information display switches (P. 4-14, 2-16)

*: Refer to the separate Navigation System Owner's Manual (if so equipped).

Refer to the page number indicated in parentheses for operating details.

ENGINE COMPARTMENT CHECK LOCATIONS

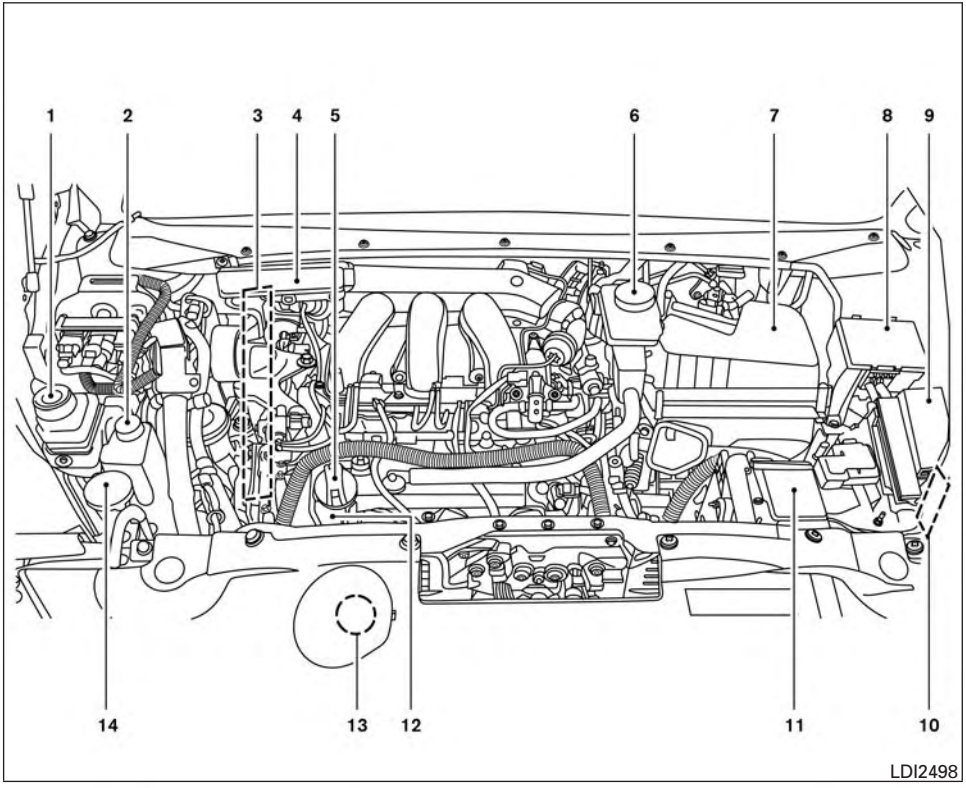

VQ35DE engine

1. Power steering fluid reservoir (P. 8-13)
2. Engine coolant reservoir (P. 8-8)
3. Drive belt location (P. 8-17)
4. Fuse box (P. 8-22)
5. Engine oil filler cap (P. 8-10)
6. Brake fluid reservoir (P. 8-14)
7. Air cleaner (P. 8-18)
8. Fuse box (P. 8-22)
9. Fuse/Fusible link box (P. 8-22)
10. Fuse/Fusible link box(P. 8-22)
11. Battery (P. 8-15)
12. Engine oil dipstick (P. 8-10)
13. Radiator cap (P. 8-8)
14. Windshield-washer fluid reservoir (P. 8-14)

Refer to the page number indicated in parentheses for operating details.

WARNING AND INDICATOR LIGHTS

Warning light	Name	Page
ABS or	Anti-lock Braking System (ABS) warning light	2-9
BRAKE or	Brake warning light	2-9
	Charge warning light	2-9
	Forward Emergency Braking (FEB) system warning light (if so equipped)	2-10
	Low tire pressure warning light	2-10
	Master warning light	2-11

Warning light	Name	Page
PS	Power steering warning light	2-11
	Seat belt warning light and chime	2-12
	Supplemental air bag warning light	2-12

Indicator light	Name	Page
P	Continuously Variable Transmission (CVT) position indicator light	2-13
	Front fog light indicator light (green)	2-13
OFF	Front passenger air bag status light	2-13
	High beam indicator light (blue)	2-13

Indicator light	Name	Page
	Malfunction Indicator Light (MIL)	2-13
	Security indicator light	2-14
	Side light and headlight indicator light (green)	2-14
	Slip indicator light	2-14
	Turn signal/hazard indicator lights	2-14
OFF	Vehicle Dynamic Control (VDC) OFF indicator light	2-14

MEMO

1 Safety—Seats, seat belts and supplemental restraint system

Seats 1-2
Front power seat adjustment 1-3
2nd row bench seat adjustment 1-5
3rd row bench seat adjustment 1-7
Armrests 1-8
Flexible seating 1-8
Head restraints/headrests 1-11
Adjustable head restraint/headrest components 1-12
Non-adjustable head restraint/headrest components 1-13
Remove 1-13
Removable (without Dual head restraint/headrest DVD system only) 1-13
Install 1-14
Adjust 1-14
Folding head restraint/headrest 1-15
Seat belts 1-16
Precautions on seat belt usage 1-16
Seat belt warning light 1-19
Pregnant women 1-19
Injured persons 1-19
Pre-crash seat belts with comfort function (front seats) (if so equipped) 1-19
Three-point type seat belt with retractor 1-20
Seat belt extenders 1-24
Seat belt maintenance 1-24
Child safety 1-25
Infants 1-25
Small children 1-26
Larger children 1-26
Child restraints 1-27
Precautions on child restraints 1-27
LATCH (Lower Anchors and Tethers for CHildren) system 1-29
Rear-facing child restraint installation using LATCH 1-32
Rear-facing child restraint installation using the seat belts 1-34
Forward-facing child restraint installation using LATCH 1-37
Forward-facing child restraint installation using the seat belts 1-40
Booster seats 1-46
Supplemental Restraint System (SRS) 1-49
Precautions on SRS 1-49
Supplemental air bag warning labels 1-67
Supplemental air bag warning light 1-67

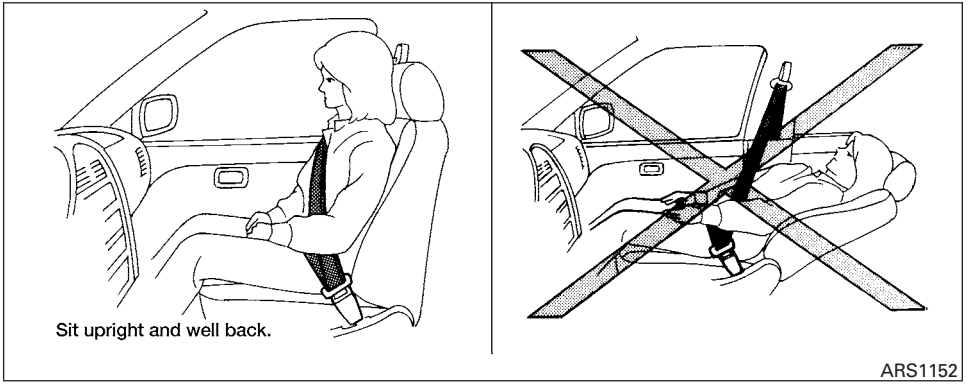

⚠WARNING

- **Do not ride in a moving vehicle when the seatback is reclined. This can be dangerous. The shoulder belt will not be against your body. In an accident, you could be thrown into it and receive neck or other serious injuries. You could also slide under the lap belt and receive serious internal injuries.**

- **For the most effective protection when the vehicle is in motion, the seat should be upright. Always sit well back and upright in the seat with both feet on the floor and adjust the seat properly. For additional information, refer to "Precautions on seat belt usage" in this section.**
- **After adjustment, gently rock in the seat to make sure it is securely locked.**

- **Do not leave children unattended inside the vehicle. They could unknowingly activate switches or controls. Unattended children could become involved in serious accidents.**
- **To help avoid risk of injury or death through unintended operation of the vehicle and/or its systems, do not leave children, people who require the assistance of others or pets unattended in your vehicle. Additionally, the temperature inside a closed vehicle on a warm day can quickly become high enough to cause a significant risk of injury or death to people and pets.**
- **Do not adjust the driver's seat while driving so full attention may be given to vehicle operation. The seat may move suddenly and could cause loss of control of the vehicle.**
- **The seatback should not be reclined any more than needed for comfort. Seat belts are most effective when the passenger sits well back and straight up in the seat. If the seatback is reclined, the risk of sliding under the lap belt and being injured is increased.**

⚠ CAUTION

When adjusting the seat positions, be sure not to contact any moving parts to avoid possible injuries and/or damage.

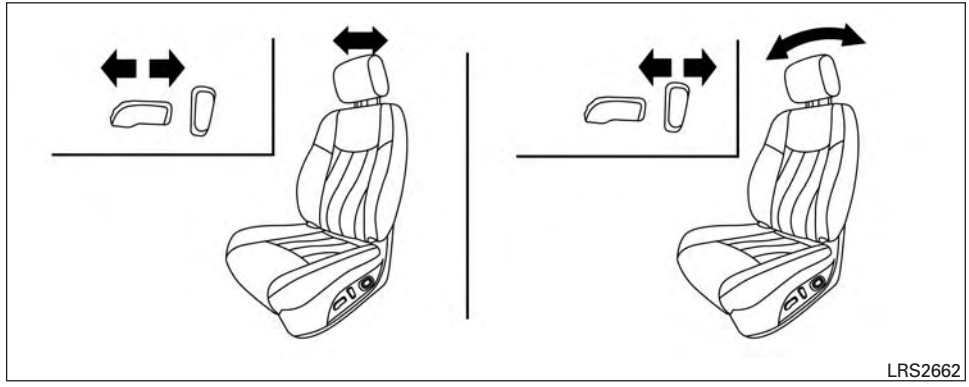

FRONT POWER SEAT ADJUSTMENT

Operating tips

- The power seat motor has an auto-reset overload protection circuit. If the motor stops during operation, wait 30 seconds then reactivate the switch.
- Do not operate the power seat switch for a long period of time when the engine is off. This will discharge the battery.

For additional information, refer to “Automatic drive positioner” in the “Pre-driving checks and adjustments” section of this manual.

Forward and backward

Moving the switch forward or backward will slide the seat forward or backward to the desired position.

Reclining

Move the recline switch backward until the desired angle is obtained. To bring the seatback forward again, move the switch forward and move your body forward. The seatback will move forward.

The reclining feature allows adjustment of the seatback for occupants of different sizes for added comfort and to help obtain proper seat

belt fit. For additional information, refer to “Precautions on seat belt usage” in this section. Also, the seatback can be reclined to allow occupants to rest when the vehicle is stopped and the shift lever is in P (Park).

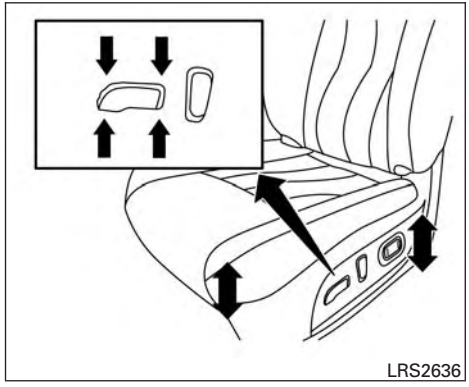

Seat lifter

Push the switch up or push down to adjust the angle and height of the seat cushion.

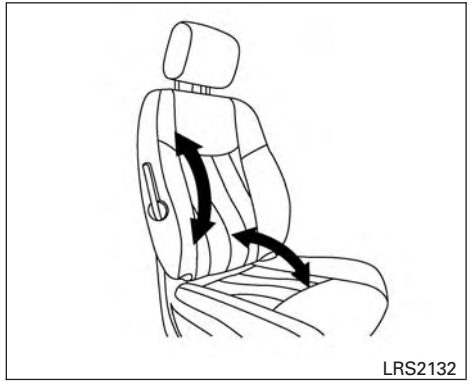

Manual (if so equipped)

Lumbar support (driver’s seat)

The lumbar support feature provides adjustable lower back support to the driver. Move the lever up or down (manual) or move the switch forward or backward (power) to adjust the seat lumbar area.

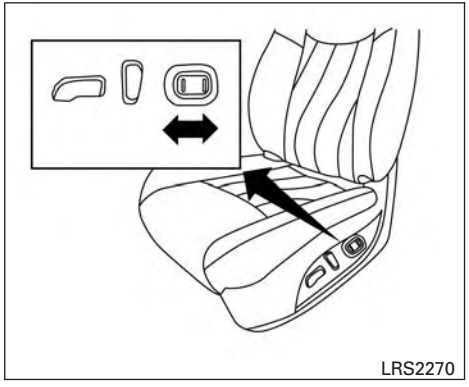

Power (if so equipped)

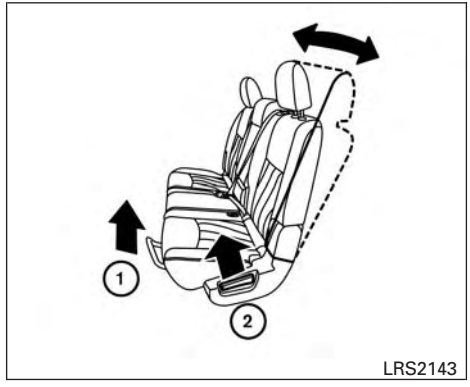

Outboard seats

2ND ROW BENCH SEAT ADJUSTMENT

Forward and backward

Pull the center of the bar ① up and hold it while you slide the seat forward or backward to the desired position. Release the bar to lock the seat in position.

Reclining

To recline the seatback, pull up on the lever ② and lean back. To bring the seatback forward, pull the lever ② up and lean your body forward. Release the lever to lock the seatback in position.

The recline feature allows adjustment of the seatback for occupants of different sizes for added comfort and to help obtain proper seat belt fit. For additional information, refer to “Precautions on seat belt usage” in this section. Also, the seatback can be reclined to allow occupants to rest when the vehicle is stopped and the shift lever is in P (Park).

⚠ WARNING

- **After adjustment, gently rock in the seat to make sure it is securely locked.**
- **Do not ride in a moving vehicle when the seatback is reclined. This can be dangerous. The shoulder belt will not be against your body. In an accident, you could be thrown into it and receive neck or other serious injuries. You could also slide under the lap belt and receive serious internal injuries.**
- **For the most effective protection when the vehicle is in motion, the seat should be upright. Always sit well back and upright in the seat and adjust the seat belt properly. For additional information, refer to “Precautions on seat belt usage” in this section.**

One touch walk-in function

The 3rd row can be accessed from outside the vehicle by using the seatback release lever located on the upper outboard side of the seatback on the 2nd row bench seat. If a child safety seat is installed on the passenger's side of the 2nd row seat, the 3rd row can be accessed without removing the child safety seat.

Multi-mode

⚠ WARNING

When returning the seat to its original position, confirm that the seat and seatback are locked properly.

⚠ CAUTION

- **Be careful not to pinch your hand or foot or bump your head when operating the walk-in seat.**
- **Do not drive with the 2nd row seat tipped up.**
- **Be careful not to allow the 2nd row seat to pinch, hit any part of your body or other people when operating the 2nd row seat. Make sure the seat path is clear of all objects before moving the seat.**

To enter the 3rd row from outside the vehicle, lift up on the seatback lever located on the upper outboard side of the seatback on the 2nd row bench seat. This will release the back of the seat and fold up the seat cushion. This will also release the seat tracks so you will be able to slide the seat forward or backward.

Slide the entire seat forward for access to the 3rd row.

To return the seat to a locked position, push the upper seatback rearward until the seatback and tracks are locked. Push the seat cushion down.

Child seat access mode

The passenger's side of the 2nd row seat can be slid forward for easy entry or exit from the 3rd row bench seat without a child safety seat being removed.

To enter the 3rd row from outside the vehicle, lift up on the seatback lever located on the upper outboard side of the seatback on the 2nd row bench seat. This will release the seatback. Then tilt the seat and release the tracks so you will be able to slide the seat forward or backward.

Slide the entire seat forward for access to the rear seats.

To return the seat to a locked position, push the upper seatback rearward until the seatback and track are locked.

⚠ WARNING

- **Do not leave a child in the child safety seat when operating the child seat access mode.**
- **When returning the seat to its original position, confirm that the seat and seatback are locked properly.**

⚠ CAUTION

- **Be careful not to pinch your hand or foot or bump your head when operating the walk-in seat.**
- **Do not drive with the 2nd row seat tipped up.**
- **Be careful not to allow the 2nd row seat to pinch, hit any part of your body or other people when operating the 2nd row seat. Make sure the seat path is clear of all objects before moving the seat.**

Exiting the 3rd row

To exit the 3rd row from either seating position, lift the upper seatback release lever to the uppermost position. This will release the back of the seat, then fold the seat cushion up and release the tracks.

Slide the entire seat forward.

To return the seat to a locked position, push the upper seatback rearward until the seatback and track are locked.

⚠ WARNING

When returning the seat to its original position, confirm that the seat and seatback are locked properly.

⚠ CAUTION

Be careful not to pinch your hand or foot or bump your head when operating the walk-in seat.

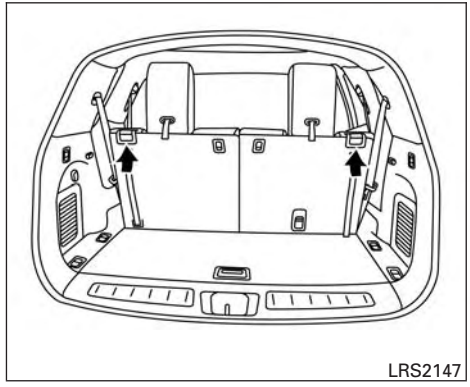

3RD ROW BENCH SEAT ADJUSTMENT

Reclining

To recline the seatback, pull up on the latch located on the outside corner of each seatback. Lean back until the desired angle is obtained.

To bring the seatback forward again, pull up on the latch and pull the seatback upright until the desired angle is obtained.

The recline feature allows adjustment of the seatback for occupants of different sizes for added comfort and to help obtain proper seat belt fit. For additional information, refer to “Precautions on

seat belt usage" in this section. Also, the seatback can be reclined to allow occupants to rest when the vehicle is stopped and the shift lever is in P (Park).

⚠ WARNING

- **After adjustment, gently rock in the seat to make sure it is securely locked.**
- **Do not ride in a moving vehicle when the seatback is reclined. This can be dangerous. The shoulder belt will not be against your body. In an accident, you could be thrown into it and receive neck or other serious injuries. You could also slide under the lap belt and receive serious internal injuries.**
- **For the most effective protection when the vehicle is in motion, the seat should be upright. Always sit well back and upright in the seat and adjust the seat belt properly. For additional information, refer to "Precautions on seat belt usage" in this section.**

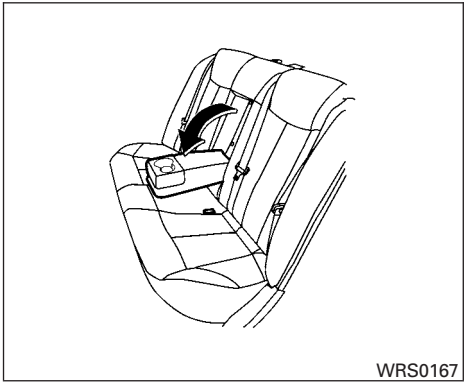

ARMRESTS

The 2nd row bench seat comes equipped with an armrest. Pull the armrest down until in resting position.

FLEXIBLE SEATING

⚠ WARNING

- **Never allow anyone to ride in the cargo area or on the rear seats when they are in the fold-down position. In a collision, people riding in these areas without proper restraints are more likely to be seriously injured or killed.**
- **Do not allow people to ride in any area of your vehicle that is not equipped with seats and seat belts. Be sure everyone in your vehicle is in a seat and using a seat belt properly.**
- **Do not allow more than one person to use the same seat belt.**
- **Do not fold down the rear seats when occupants are in the rear seat area or any luggage is on the rear seats.**
  - **Make sure that the seat path is clear before moving the seat.**
  - **Be careful not to allow hands or feet to get caught or pinched in the seat.**
- **Head restraints/headrests should be adjusted properly as they may provide significant protection against injury in an accident. Always replace and adjust them properly if they have been removed for any reason.**
- **If the head restraints/headrests are removed for any reason, they should be securely stored to prevent them from causing injury to passengers or damage to the vehicle in case of sudden braking or an accident.**

- **When returning the seatbacks to the upright position, be certain they are completely secured in the latched position. If they are not completely secured, passengers may be injured in an accident or sudden stop.**
- **Properly secure all cargo to help prevent it from sliding or shifting. Do not place cargo higher than the seatbacks. In a sudden stop or collision, unsecured cargo could cause personal injury.**

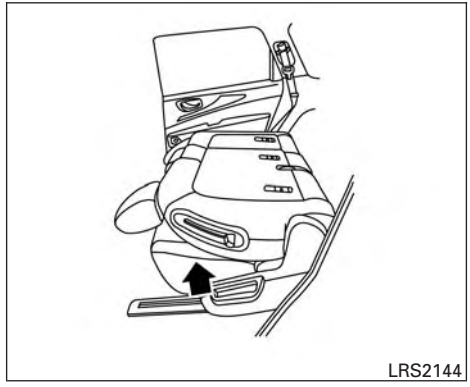

Folding the 2nd row bench seat

To fold the 2nd row bench seat flat for maximum cargo hauling:

1. Make sure that the head restraints/headrests are lowered. To remove the head restraints/headrests, push and hold the lock knob while moving the head restraints/headrests in an upward direction. Store the head restraints/headrests properly so it is not loose in the vehicle.
2. Stow the 2nd row seat belts in the seat belt hooks found on the sides of the vehicle.
3. Lift up on the recline lever on the side of the outboard seats to fold the seatbacks flat.
4. To return the 2nd row bench seats to a seating position, push up on the seatback until it latches in place.

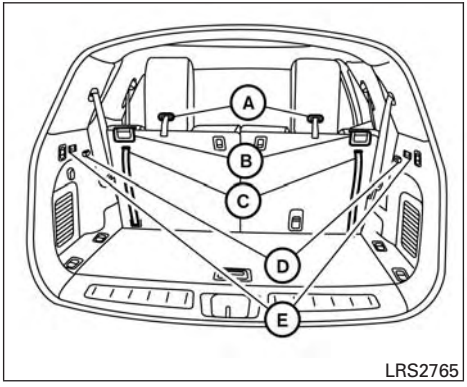

LRS2765

3rd row manual folding seats

To fold the 3rd row seats flat for maximum cargo capacity:

1. Pull the strap Ⓐ to release the head restraint/headrest forward.
2. Stow the 3rd row seat belts in the seat belt hooks Ⓓ found on the sides of the cargo area.
3. Pull up on the latch Ⓑ located in the upper corner of each seatback and lower the seatback forward over the seat base.

Manual operation to return the 3rd row seats to a seating position (if so equipped):

1. Use the pull straps Ⓒ to raise each seatback. Pull back until the seatback latches into position. **Make sure to properly raise each seatback to an upright and secured position.**
2. Do not use the pull strap to return the head restraint/headrest to the upright position. Pull back on the head restraint/headrest until it latches in the upright position.

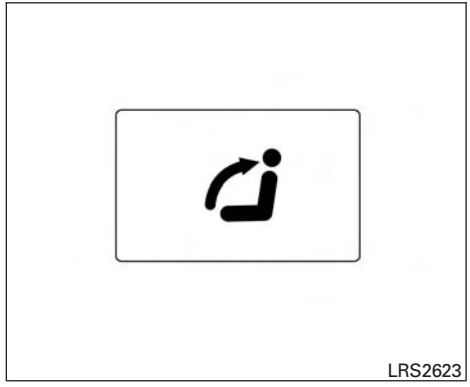
LRS2623

Power operation to return the 3rd row seats to a seating position (if so equipped):

1. Push and hold the corresponding switch Ⓔ located on the right and left side in the cargo area.

A beep sounds once and the seatback will be returned automatically.

A beep sounds twice when the seatback is fully returned to the seating position.

If the control unit detects any obstacle or malfunctions while in the power operation, a beep sounds for 4 seconds and the seatback will return to the folded position automatically. Check if

there are any obstacles caught that prevent seats from returning to the folded position. It is recommended you visit an INFINITI retailer if the beep still sounds.

⚠CAUTION

When operating the 3rd row power seatback return, make sure that the vehicle is stopped and the transmission is in the P (Park) position.

⚠WARNING

- **When the seat is returned to the normal seating position, the head restraints/headrests must be returned to the upright position to properly protect vehicle occupants.**
- **Never allow anyone to ride in the cargo area or on the 3rd row seats when they are in the fold-down position. In a collision, people riding in these areas are more likely to be seriously injured or killed.**
- **Do not allow people to ride in any area of your vehicle that is not equipped with seats and seat belts. Be sure everyone in your vehicle is in a seat and using a seat belt properly.**
- **Do not fold down the 3rd row seats when occupants are in the 3rd row seat area or any luggage is on the 3rd row seats.**

  – Make sure that the seat path is clear before moving the seat.

  – Be careful not to allow hands or feet to get caught or pinched in the seat.
- **Properly secure all cargo to help prevent it from sliding or shifting. Do not place cargo higher than the seatbacks. In a sudden stop or collision, unsecured cargo could cause personal injury.**

⚠WARNING

Head restraints/headrests supplement the other vehicle safety systems. They may provide additional protection against injury in certain rear end collisions. Adjustable head restraints/headrests must be adjusted properly, as specified in this section. Check the adjustment after someone else uses the seat. Do not attach anything to the head restraint/headrest stalks or remove the head restraint/headrest. Do not use the seat if the head restraint/headrest has been removed. If the head restraint/headrest was removed, reinstall and properly adjust the head restraint/headrest before an occupant uses the seating position. Failure to follow these instructions can reduce the effectiveness of the head restraints/headrests. This may increase the risk of serious injury or death in a collision.

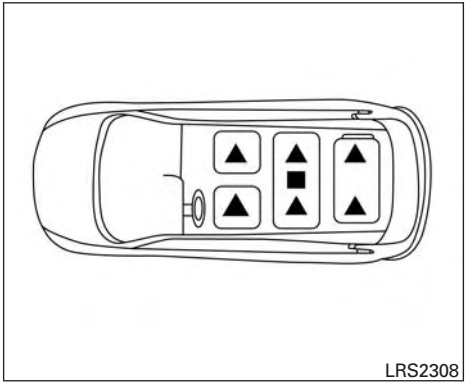

The illustration shows the seating positions equipped with head restraints/headrests.

▲ Indicates the seating position is equipped with a head restraint.

■ Indicates the seating position is equipped with a headrest.

+ Indicates the seating position is not equipped with a head restraint or headrest (if applicable).

- Your vehicle is equipped with a head restraint/headrest that may be integrated, adjustable or non-adjustable.
- Adjustable head restraints/headrests have multiple notches along the stalk(s) to lock them in a desired adjustment position.
- The non-adjustable head restraints/headrests have a single locking notch to secure them to the seat frame.
- Proper Adjustment:
  - For the adjustable type, align the head restraint/headrest so the center of your ear is approximately level with the center of the head restraint/headrest.
  - If your ear position is still higher than the recommended alignment, place the head restraint/headrest at the highest position.
- If the head restraint/headrest has been removed, ensure that it is reinstalled and locked in place before riding in that designated seating position.

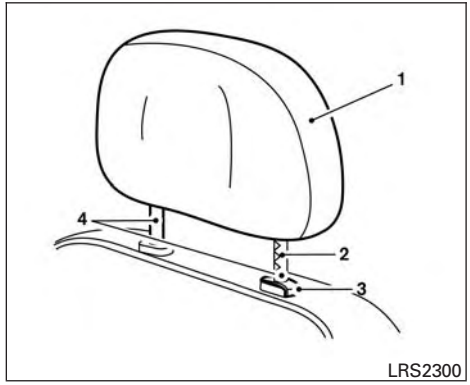

ADJUSTABLE HEAD RESTRAINT/ HEADREST COMPONENTS

1. Removable head restraint/headrest
2. Multiple notches
3. Lock knob
4. Stalks

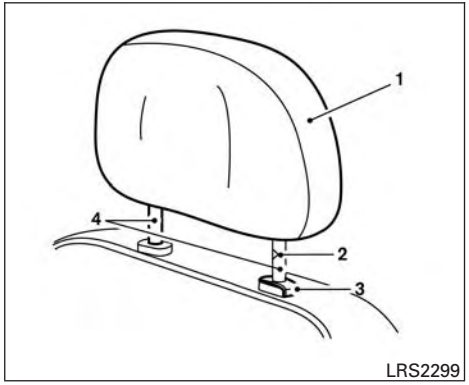

NON-ADJUSTABLE HEAD RESTRAINT/HEADREST COMPONENTS

1. Removable head restraint/headrest
2. Single notch
3. Lock knob
4. Stalks

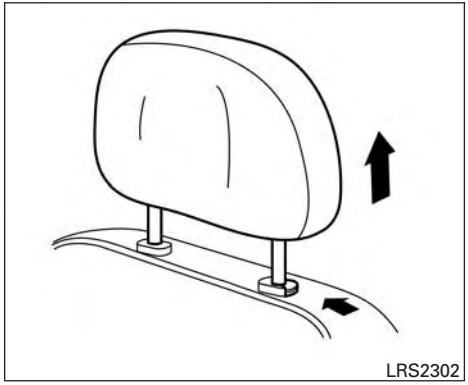

REMOVE

Use the following procedure to remove the head restraint/headrest:

1. Pull the head restraint/headrest up to the highest position.
2. Push and hold the lock knob.
3. Remove the head restraint/headrest from the seat.
4. Store the head restraint/headrest properly in a secure place so it is not loose in the vehicle.
5. Reinstall and properly adjust the head restraint/headrest before an occupant uses the seating position.

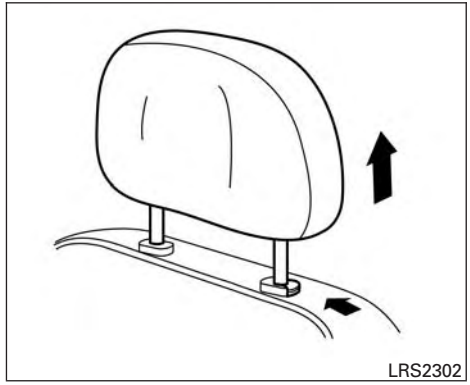

REMOVABLE (without Dual head restraint/headrest DVD system only)

⚠ CAUTION

Do not remove head restraint/headrest from vehicles equipped with Dual head restraint/headrest DVD system. Removal may damage the system wiring.

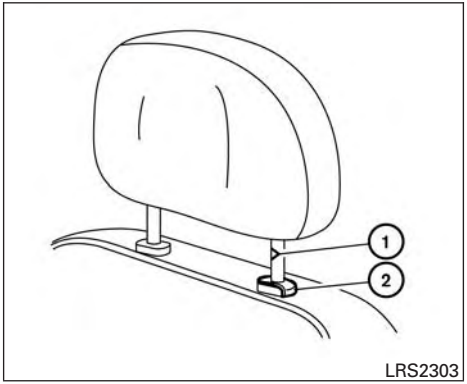

LRS2303

INSTALL

1. Align the head restraint/headrest stalks with the holes in the seat. Make sure that the head restraint/headrest is facing the correct direction. The stalk with the notch (notches) ① must be installed in the hole with the lock knob ②.
2. Push and hold the lock knob and push the head restraint/headrest down.
3. Properly adjust the head restraint/headrest before an occupant uses the seating position.

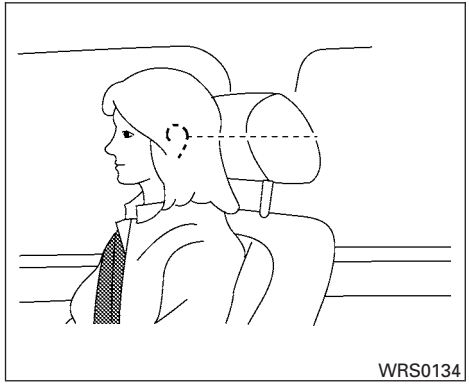
WRS0134

ADJUST

For adjustable head restraint/headrest

Adjust the head restraint/headrest so the center is level with the center of your ears. If your ear position is still higher than the recommended alignment, place the head restraint/headrest at the highest position.

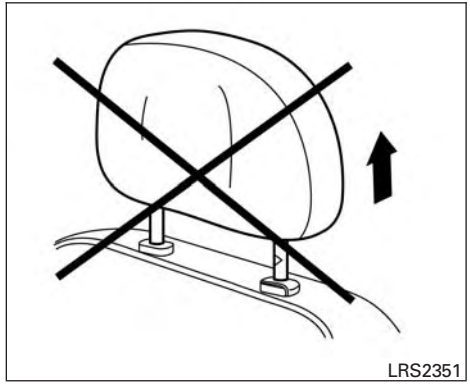
LRS2351

For non-adjustable head restraint/headrest

Make sure the head restraint/headrest is positioned so the lock knob is engaged in the notch before riding in that designated seating position.

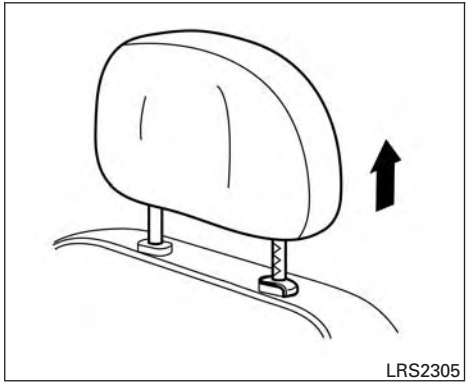

Raise

To raise the head restraint/headrest, pull it up.

Make sure the head restraint/headrest is positioned so the lock knob is engaged in the notch before riding in that designated seating position.

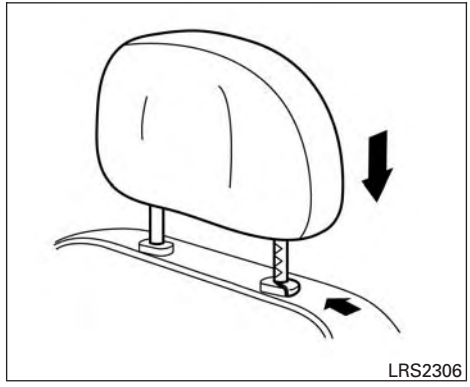

Lower

To lower, push and hold the lock knob and push the head restraint/headrest down.

Make sure the head restraint/headrest is positioned so the lock knob is engaged in the notch before riding in that designated seating position.

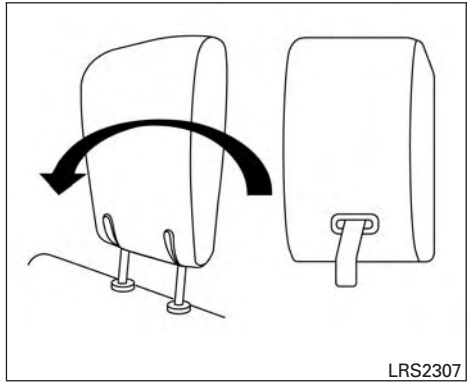

FOLDING HEAD RESTRAINT/ HEADREST

To fold the head restraint/headrest, pull the strap located on the rear of the head restraint/headrest.

If the head restraint/headrest has been folded, make sure that it is returned to the upright position.

Make sure the head restraint/headrest is positioned so the lock knob is engaged in the notch before riding in that designated seating position.

⚠ WARNING

When the seat is returned to the normal seating position, the head restraint/headrest must be returned to the upright position to properly protect vehicle occupants.

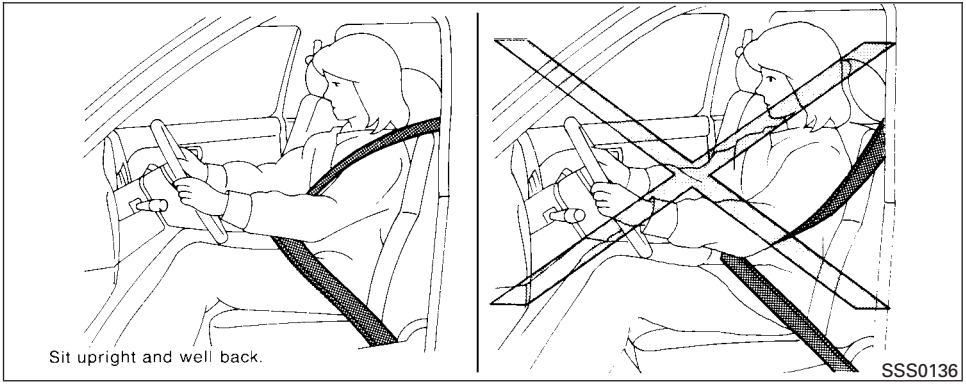

PRECAUTIONS ON SEAT BELT USAGE

If you are wearing your seat belt properly adjusted and you are sitting upright and well back in your seat with both feet on the floor, your chances of being injured or killed in a collision and/or the severity of injury may be greatly reduced. INFINITI strongly encourages you and all of your passengers to buckle up every time you drive, even if your seating position includes a supplemental air bag.

Most U.S. states and Canadian provinces or territories specify that seat belts be worn at all times when a vehicle is being driven.

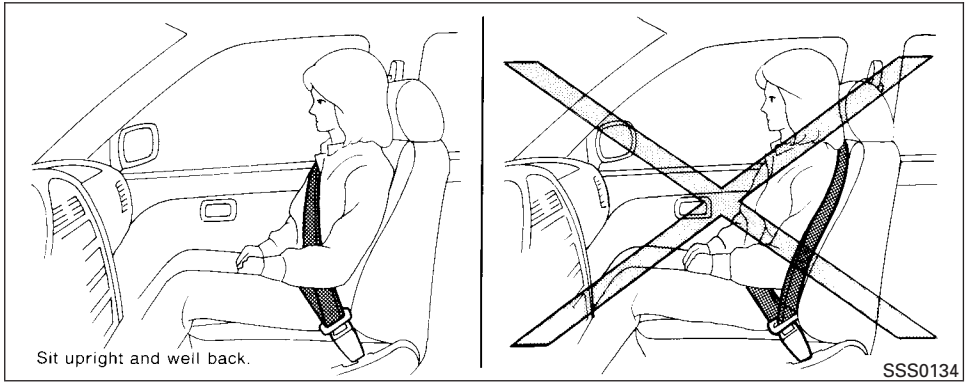

⚠ WARNING

- **Every person who drives or rides in this vehicle should use a seat belt at all times. Children should be in the rear seats and in an appropriate restraint.**

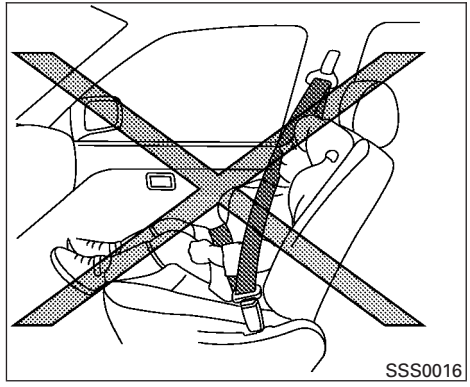

⚠ WARNING

- **The seat belt should be properly adjusted to a snug fit. Failure to do so may reduce the effectiveness of the entire restraint system and increase the chance or severity of injury in an accident. Serious injury or death can occur if the seat belt is not worn properly.**

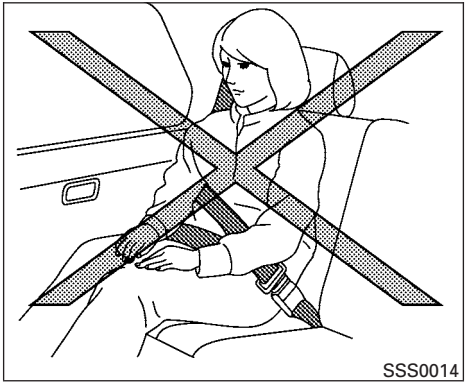

⚠ WARNING

- **Always route the shoulder belt over your shoulder and across your chest. Never put the belt behind your back, under your arm or across your neck. The belt should be away from your face and neck, but not falling off your shoulder.**
- **Position the lap belt as low and snug as possible AROUND THE HIPS, NOT THE WAIST. A lap belt worn too high could increase the risk of internal injuries in an accident.**
- **Be sure the seat belt tongue is securely fastened to the proper buckle.**
- **Do not wear the seat belt inside out or twisted. Doing so may reduce its effectiveness.**
- **Do not allow more than one person to use the same seat belt.**
- **Never carry more people in the vehicle than there are seat belts.**
- **If the seat belt warning light glows continuously while the ignition is turned ON with all doors closed and all seat belts fastened, it may indicate a malfunction in the system. Have the system checked. It is recommended that you visit an INFINITI retailer for this service.**
- **No changes should be made to the seat belt system. For example, do not modify the seat belt, add material, or install devices that may change the seat belt routing or tension. Doing so may affect the operation of the seat belt system. Modifying or tampering with the seat belt system may result in serious personal injury.**
- **Once a seat belt pretensioner(s) have activated, they cannot be reused and must be replaced together with the retractor. It is recommended that you visit an INFINITI retailer for this service.**
- **All seat belt assemblies, including retractors and attaching hardware, should be inspected after any collision. It is recommended that you visit an INFINITI retailer for this service. INFINITI recommends that all seat belt assemblies in use during a collision be replaced unless the collision was minor and the belts show no damage and continue to operate properly. Seat belt assemblies not in use during a collision should also be inspected and replaced if either damage or improper operation is noted.**
- **All child restraints and attaching hardware should be inspected after any collision. Always follow the restraint manufacturer's inspection instructions and replacement recommendations. The child restraints should be replaced if they are damaged.**

SEAT BELT WARNING LIGHT

Both the driver's and passenger's front seats are equipped with a seat belt warning light. The warning light, located on the instrument panel, will show the status of the driver and passenger seat belt.

NOTE:

The front passenger seat belt warning light will not light up if the seat is not occupied.

For additional information, refer to "Warning lights, indicator lights and audible reminders" in the "Instruments and controls" section of this manual.

PREGNANT WOMEN

INFINITI recommends that pregnant women use seat belts. The seat belt should be worn snug and always position the lap belt as low as possible around the hips, not the waist. Place the shoulder belt over your shoulder and across your chest. Never run the lap/shoulder belt over your abdominal area. Contact your doctor for specific recommendations.

INJURED PERSONS

INFINITI recommends that injured persons use seat belts. Check with your doctor for specific recommendations.

PRE-CRASH SEAT BELTS WITH COMFORT FUNCTION (front seats) (if so equipped)

The pre-crash seat belt tightens the seat belt with a motor to help restrain front seat occupants. This helps reduce the risk of injury in a collision.

The motor retracts the seat belt under the following emergency conditions:

- During emergency braking.
- During sudden steering maneuvers
- Activation of the Forward Emergency Braking (FEB) (if so equipped). For additional information, refer to "Forward Emergency Braking (FEB)" in the "Starting and driving" section of this manual.
- In the event of certain types of rollover collisions.

The pre-crash seat belt will not be active when:

- the seat belt is not fastened.
- the vehicle speed is under 10 mph (15 km/h) during emergency braking.
- the vehicle speed is under 19 mph (30 km/h) during sudden steering maneuvers or certain types of rollover collisions.

The pre-crash seat belt will not be active when the brake pedal is not depressed except when sudden steering maneuvers occur and the Forward Emergency Braking (FEB) (if so equipped) activates.

The motor also retracts the seat belt when the seat belt is fastened or unfastened. When the seat belt is fastened, the motor tightens the seat belt for a snug fit. When the seat belt is unfastened, the motor retracts the seat belt. If the seat belt is not fully retracted, the motor retracts the seat belt when the door is opened.

Always wear your seat belt correctly and sit upright and well back.

If the motor cannot retract the seat belt when the seat belt is fastened or unfastened, it may indicate the pre-crash seat belt system has a malfunction. It is recommended that you visit an INFINITI retailer to check and repair the system.

When the seat belt is retracted repeatedly in a short period of time, the motor may not be able to retract the seat belt. After 8 minutes, the motor reactivates and retracts the seat belt. If the seat belt still cannot be retracted by the motor, the pre-crash seat belt system has a malfunction. It is recommended that you visit an INFINITI retailer to check and repair the system.

THREE-POINT TYPE SEAT BELT WITH RETRACTOR

⚠ WARNING

- **Every person who drives or rides in this vehicle should use a seat belt at all times. Children should be in the rear seats and in an appropriate restraint.**
- **Do not ride in a moving vehicle when the seatback is reclined. This can be dangerous. The shoulder belt will not be against your body. In an accident, you could be thrown into it and receive neck or other serious injuries. You could also slide under the lap belt and receive serious internal injuries.**
- **For the most effective protection when the vehicle is in motion, the seat should be upright. Always sit well back and upright in the seat with both feet on the floor and adjust the seat belt properly.**
- **Do not allow children to play with the seat belts. Most seating positions are equipped with Automatic Locking Retractor (ALR) mode seat belts. If the seat belt becomes wrapped around a child's neck with the ALR mode activated, the child can be seriously injured or killed if the seat belt retracts and becomes tight. This can occur even if the vehicle is parked. Unbuckle the seat belt to release the child. If the seat belt cannot be unbuckled or is already unbuckled, release the child by cutting the seat belt with a suitable tool (such as a knife or scissors) to release the seat belt.**

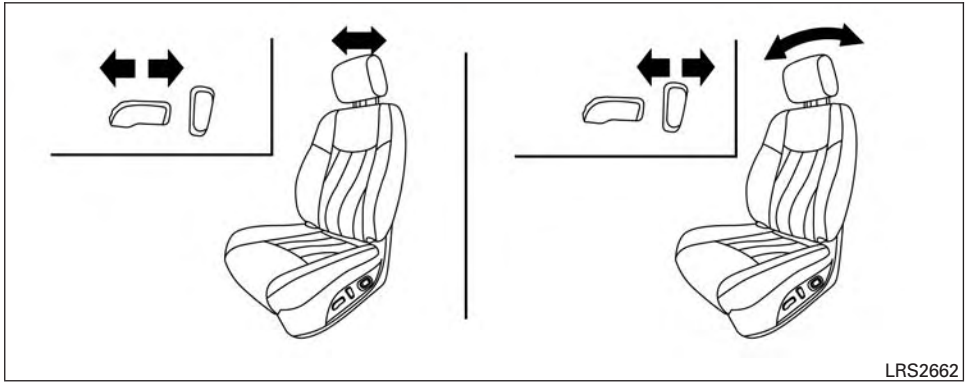

Fastening the seat belts

1. Adjust the seat. For additional information, refer to “Seats” in this section.
2. Slowly pull the seat belt out of the retractor and insert the tongue into the buckle Ⓐ until you hear and feel the latch engage.
   - **The retractor is designed to lock during a sudden stop or on impact. A slow pulling motion permits the seat belt to move and allows you some freedom of movement in the seat.**
   - **If the seat belt cannot be pulled from its fully retracted position, firmly pull the belt and release it. Then smoothly pull the belt out of the retractor.**

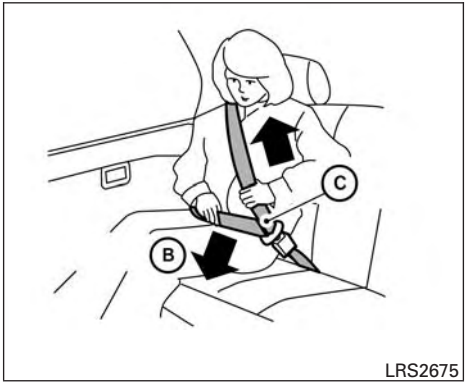

3. Position the lap belt portion **low and snug on the hips** Ⓑ as shown.
4. Pull the shoulder belt portion toward the retractor to take up extra slack Ⓒ. Be sure the shoulder belt is routed over your shoulder and across your chest.

The front passenger seat and the rear seating positions three-point seat belts have two modes of operation:

- Emergency Locking Retractor (ELR)
- Automatic Locking Retractor (ALR)

The ELR mode allows the seat belt to extend and retract to allow the driver and passengers some freedom of movement in the seat. The ELR locks the seat belt when the vehicle slows down rapidly or during certain impacts.

The ALR mode (child restraint mode) locks the seat belt for child restraint installation.

When the ALR mode is activated, the seat belt cannot be extended again until the seat belt tongue is detached from the buckle and fully retracted. The seat belt returns to the ELR mode after the seat belt fully retracts. For additional information, refer to “Child restraints” in this section.

The ALR mode should be used only for child restraint installation. During normal seat belt use by an occupant, the ALR mode should not be activated. If it is activated, it may cause uncomfortable seat belt tension. It can also change the operation of the front passenger air bag. For additional information, refer to “Front passenger air bag and status light” in this section.

⚠ WARNING

When fastening the seat belts, be certain that the seatbacks are completely secured in the latched position. If they are not completely secured, passengers may be injured in an accident or sudden stop.

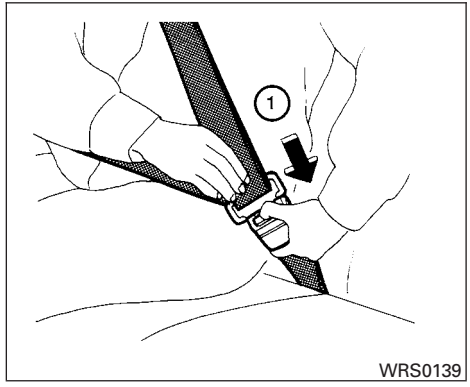

Unfastening the seat belts

To unfasten the seat belt, press the button on the buckle ①. The seat belt automatically retracts.

Checking seat belt operation

Seat belt retractors are designed to lock seat belt movement by two separate methods:

- When the seat belt is pulled quickly from the retractor.
- When the vehicle slows down rapidly.

To increase your confidence in the seat belts, check the operation as follows.

- Grasp the shoulder belt and pull forward quickly. The retractor should lock and restrict further belt movement.

If the retractor does not lock during this check, get the system checked. It is recommended that you visit an INFINITI retailer for this service, or to learn more about seat belt operation.

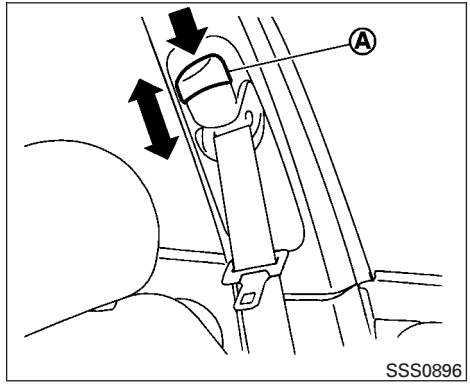

Ⓐ Shoulder belt height adjust button

Shoulder belt height adjustment (front and 2nd row outboard seats)

The shoulder belt anchor height should be adjusted to the position best for you. For additional information, refer to “Precautions on seat belt usage” in this section.

To adjust, push the button and then move the shoulder belt anchor to the desired position so that the belt passes over the center of the shoulder. The belt should be away from your face and neck, but not falling off of your shoulder. Release the adjustment button to lock the shoulder belt anchor into position.

⚠ WARNING

- **After adjustment, release the adjustment button and try to move the shoulder belt anchor up and down to make sure it is securely fixed in position.**
- **The shoulder belt anchor height should be adjusted to the position best for you. Failure to do so may reduce the effectiveness of the entire restraint system and increase the chance or severity of injury in an accident.**
- **The shoulder belt should rest on the middle of the shoulder. It must not rest against the neck.**
- **Be sure that the seat belt is not twisted in any way.**
- **Be sure that the shoulder belt anchor is secured by trying to move the shoulder belt anchor up and down after adjustment.**

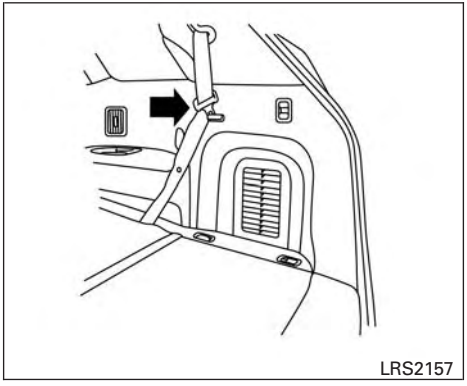

3rd row shown; 2nd row similar

Seat belt hook

When the seat belt is not in use and when folding down the rear seats, hook the rear seat belts on the seat belt hooks.

SEAT BELT EXTENDERS

If, because of body size or driving position, it is not possible to properly fit the lap/shoulder belt and fasten it, an extender that is compatible with the installed seat belts is available for purchase. The extender adds approximately 8 in (200 mm) of length and may be used for either the driver or front passenger seating position.

Seat belt extenders are available for the:

- Driver and front passenger seating position
- 2nd and 3rd row seating position

It is recommended that you visit an INFINITI retailer for assistance with purchasing an extender if an extender is required.

⚠ WARNING

- **Only INFINITI seat belt extenders, made by the same company which made the original equipment seat belts, should be used with INFINITI seat belts.**
- **Adults and children who can use the standard seat belt should not use an extender. Such unnecessary use could result in serious personal injury in the event of an accident.**
- **Never use seat belt extenders to install child restraints. If the child restraint is not secured properly, the child could be seriously injured or killed in a collision or a sudden stop.**

SEAT BELT MAINTENANCE

- **To clean the seat belt webbing,** apply a mild soap solution or any solution recommended for cleaning upholstery or carpet. Then wipe with a cloth and allow the seat belts to dry in the shade. Do not allow the seat belts to retract until they are completely dry.
- **If dirt builds up in the shoulder belt guide of the seat belt anchors,** the seat belts may retract slowly. Wipe the shoulder belt guide with a clean, dry cloth.
- **Periodically check to see that the seat belt and the metal components,** such as buckles, tongues, retractors, flexible wires and anchors, work properly. If loose parts, deterioration, cuts or other damage on the webbing is found, the entire seat belt assembly should be replaced.

⚠WARNING

Do not allow children to play with the seat belts. Most seating positions are equipped with Automatic Locking Retractor (ALR) mode seat belts. If the seat belt becomes wrapped around a child's neck with the ALR mode activated, the child can be seriously injured or killed if the seat belt retracts and becomes tight. This can occur even if the vehicle is parked. Unbuckle the seat belt to release the child. If the seat belt cannot be unbuckled or is already unbuckled, release the child by cutting the seat belt with a suitable tool (such as a knife or scissors) to release the seat belt.

Children need adults to help protect them. They need to be properly restrained.

In addition to the general information in this manual, child safety information is available from many other sources, including doctors, teachers, government traffic safety offices, and community organizations. Every child is different, so be sure to learn the best way to transport your child.

There are three basic types of child restraint systems:

- Rear-facing child restraint
- Forward-facing child restraint
- Booster seat

The proper restraint depends on the child's size. Generally, infants up to about 1 year and less than 20 lbs (9 kg) should be placed in rear-facing child restraints. Forward-facing child restraints are available for children who outgrow rear-facing child restraints and are at least 1 year old. Booster seats are used to help position a vehicle lap/shoulder belt on a child who can no longer use a forward-facing child restraint.

⚠WARNING

Infants and children need special protection. The vehicle's seat belts may not fit them properly. The shoulder belt may come too close to the face or neck. The lap belt may not fit over their small hip bones. In an accident, an improperly fitting seat belt could cause serious or fatal injury. Always use appropriate child restraints.

All U.S. states and Canadian provinces or territories require the use of approved child restraints for infants and small children. For additional information, refer to "Child restraints" in this section.

A child restraint may be secured in the vehicle by using either the LATCH (Lower Anchor and Tethers for CHildren) system or with the vehicle seat belt. For additional information, refer to "Child restraints" in this section.

INFINITI recommends that all pre-teens and children be restrained in the rear seat. Studies show that children are safer when properly restrained in the rear seat than in the front seat.

This is especially important because your vehicle has a supplemental restraint system (Air bag system) for the front passenger. For additional information, refer to "Supplemental Restraint System (SRS)" in this section.

INFANTS

Infants up to at least 1 year old should be placed in a rear-facing child restraint. INFINITI recommends that infants be placed in child restraints that comply with Federal Motor Vehicle Safety Standards or Canadian Motor Vehicle Safety Standards. You should choose a child restraint that fits your vehicle and always follow the manufacturer's instructions for installation and use.

SMALL CHILDREN

Children that are over 1 year old and weigh at least 20 lbs (9 kg) should remain in a rear-facing child restraint as long as possible up to the height or weight limit of the child restraint. Children who outgrow the height or weight limit of the rear-facing child restraint and are at least 1 year old should be secured in a forward-facing child restraint with a harness. Refer to the manufacturer's instructions for minimum and maximum weight and height recommendations. INFINITI recommends that small children be placed in child restraints that comply with Federal Motor Vehicle Safety Standards or Canadian Motor Vehicle Safety Standards. You should choose a child restraint that fits your vehicle and always follow the manufacturer's instructions for installation and use.

LARGER CHILDREN

Children should remain in a forward-facing child restraint with a harness until they reach the maximum height or weight limit allowed by the child restraint manufacturer.

Once a child outgrows the height or weight limit of the harness-equipped forward-facing child restraint, INFINITI recommends that the child be placed in a commercially available booster seat to obtain proper seat belt fit. For a seat belt to fit properly, the booster seat should raise the child so that the shoulder belt is properly positioned across the chest and the top, middle portion of the shoulder. The shoulder belt should not cross the neck or face and should not fall off the shoulder. The lap belt should lie snugly across the lower hips or upper thighs, not the abdomen. A booster seat can only be used in seating positions that have a three-point type seat belt. The booster seat should fit the vehicle seat and have a label certifying that it complies with Federal Motor Vehicle Safety Standards or Canadian Motor Vehicle Safety Standards.

A booster seat should be used until the child can pass the seat belt fit test below:

- Are the child's back and hips against the vehicle seatback?
- Is the child able to sit without slouching?
- Do the child's knees bend easily over the front edge of the seat with feet flat on the floor?
- Can the child safely wear the seat belt (lap belt low and snug across the hips and shoulder belt across mid-chest and shoulder)?
- Is the child able to use the properly adjusted head restraint/headrest?
- Will the child be able to stay in position for the entire ride?

LRS2690

If you answered no to any of these questions, the child should remain in a booster seat using a three-point type seat belt.

NOTE:

Laws in some communities may follow different guidelines. Check local and state regulations to confirm your child is using the correct restraint system before traveling.

⚠ WARNING

Never let a child stand or kneel on any seat and do not allow a child in the cargo area. The child could be seriously injured or killed in a sudden stop or collision.

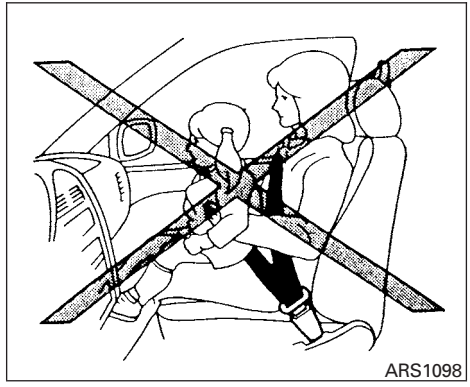
ARS1098

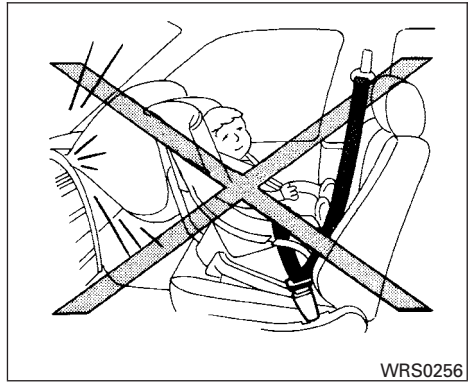
WRS0256

PRECAUTIONS ON CHILD RESTRAINTS

⚠ WARNING

- **Failure to follow the warnings and instructions for proper use and installation of child restraints could result in serious injury or death of a child or other passengers in a sudden stop or collision:**
  - **The child restraint must be used and installed properly. Always follow all of the child restraint manufacturer's instructions for installation and use.**

- **Infants and children should never be held on anyone's lap. Even the strongest adult cannot resist the forces of a collision.**
- **Do not put a seat belt around both a child and another passenger.**
- **INFINITI recommends that all child restraints be installed in the rear seat. Studies show that children are safer when properly restrained in the rear seat than in the front seat. If you must install a forward-facing child restraint in the front seat, refer to "Forward-facing child restraint installation using the seat belts" in this section.**
- **Even with the INFINITI Advanced Air Bag System, never install a rear-facing child restraint in the front seat. An inflating air bag could seriously injure or kill a child. A rear-facing child restraint must only be used in the rear seat.**
- **Be sure to purchase a child restraint that will fit the child and vehicle. Some child restraints may not fit properly in your vehicle.**
- **Child restraint anchorages are designed to withstand only those loads imposed by correctly fitted child restraints. Under no circumstances are they to be used to attach adult seat belts, or other items or equipment to the vehicle. Doing so could damage the child restraint anchorages. The child restraint will not be properly installed using the damaged anchorages, and a child could be seriously injured or killed in a collision.**
- **Never use the anchor points for adult seat belts or harnesses.**
- **A child restraint with a top tether strap should not be used in the front passenger seat.**
- **Keep seatbacks as upright as possible after fitting the child restraint.**
- **Infants and children should always be placed in an appropriate child restraint while in the vehicle.**

- **When the child restraint is not in use, keep it secured with the LATCH system or a seat belt. In a sudden stop or collision, loose objects can injure occupants or damage the vehicle.**

⚠ CAUTION

A child restraint in a closed vehicle can become very hot. Check the seating surface and buckles before placing a child in the child restraint.

This vehicle is equipped with a universal child restraint anchor system, referred to as the LATCH (Lower Anchors and Tethers for CHildren) system. Some child restraints include rigid or webbing-mounted attachments that can be connected to these anchors. For additional information, refer to "LATCH (Lower Anchors and Tethers for CHildren) system" in this section.

If you do not have a LATCH compatible child restraint, the vehicle seat belts can be used.

Several manufacturers offer child restraints for infants and children of various sizes. When selecting any child restraint, keep the following points in mind:

- Choose only a restraint with a label certifying that it complies with Federal Motor Vehicle Safety Standard 213 or Canadian Motor Vehicle Safety Standard 213.
- Check the child restraint in your vehicle to be sure it is compatible with the vehicle's seat and seat belt system.

- If the child restraint is compatible with your vehicle, place your child in the child restraint and check the various adjustments to be sure the child restraint is compatible with your child. Choose a child restraint that is designed for your child's height and weight. Always follow all recommended procedures.
- If the combined weight of the child and child restraint is less than 65 lbs (29.5 kg), you may use either the LATCH anchors or the seat belt to install the child restraint (not both at the same time).
- If the combined weight of the child and child restraint is greater than 65 lbs (29.5 kg), use the vehicle's seat belt (not the lower anchors) to install the child restraint.
- Be sure to follow the child restraint manufacturer's instructions for installation.

All U.S. states and Canadian provinces or territories require that infants and small children be restrained in an approved child restraint at all times while the vehicle is being operated. Canadian law requires the top tether strap on forward-facing child restraints be secured to the designated anchor point on the vehicle.

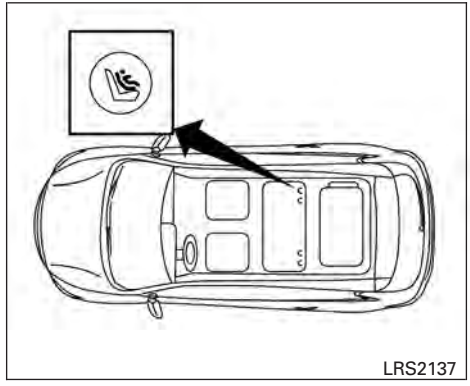

LATCH system lower anchor locations - bench seat

LATCH (Lower Anchors and Tethers for CHildren) SYSTEM

Your vehicle is equipped with special anchor points that are used with LATCH system compatible child restraints. This system may also be referred to as the ISOFIX or ISOFIX compatible system. With this system, you do not have to use a vehicle seat belt to secure the child restraint unless the combined weight of the child and child restraint exceeds 65 lbs (29.5 kg). If the combined weight of the child and child restraint is greater than 65 lbs (29.5 kg), use the vehicle's seat belt (not the lower anchors) to install the child restraint. Be sure to follow the child restraint manufacturer's instructions for installation.

The LATCH lower anchor points are provided to install child restraints in the following positions only:

- 2nd row bench seat – outboard seating positions

LATCH lower anchor

⚠ WARNING

Failure to follow the warnings and instructions for proper use and installation of child restraints could result in serious injury or death of a child or other passengers in a sudden stop or collision:

- **Attach LATCH system compatible child restraints only at the locations shown in the illustration.**
- **Do not secure a child restraint in the 2nd row center position using the LATCH system anchors. The child restraint will not be secured properly.**

- **Inspect the lower anchors by inserting your fingers into the lower anchor area. Feel to make sure there are no obstructions over the anchors such as seat belt webbing or seat cushion material. The child restraint will not be secured properly if the lower anchors are obstructed.**
- **Child restraint anchorages are designed to withstand only those loads imposed by correctly fitted child restraints. Under no circumstances are they to be used to attach adult seat belts, or other items or equipment to the vehicle. Doing so could damage the child restraint anchorages. The child restraint will not be properly installed using the damaged anchorages, and a child could be seriously injured or killed in a collision.**

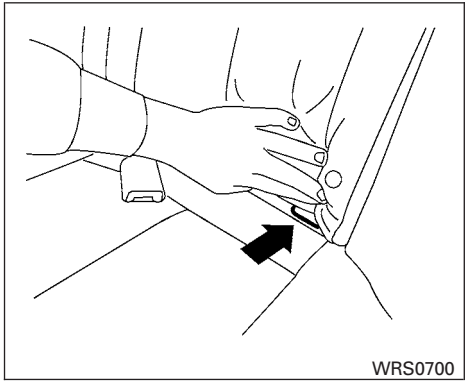

LATCH lower anchor location

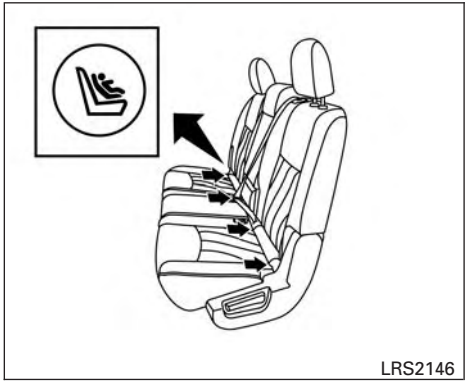

LATCH label locations 2nd row bench

LATCH lower anchor location

The LATCH lower anchors are located at the rear of the seat cushion near the seatback. A label is attached to the seatback to help you locate the LATCH lower anchors.

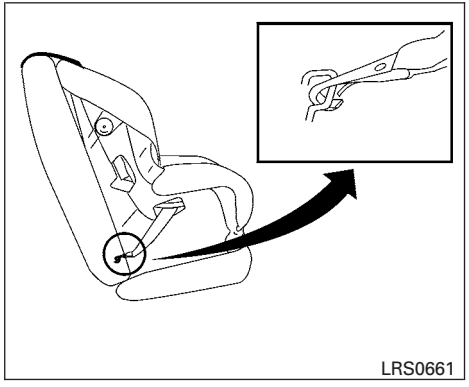

LATCH webbing-mounted attachment

Installing child restraint LATCH lower anchor attachments

LATCH compatible child restraints include two rigid or webbing-mounted attachments that can be connected to two anchors located at certain seating positions in your vehicle. With this system, you do not have to use a vehicle seat belt to secure the child restraint. Check your child restraint for a label stating that it is compatible with LATCH. This information may also be in the instructions provided by the child restraint manufacturer.

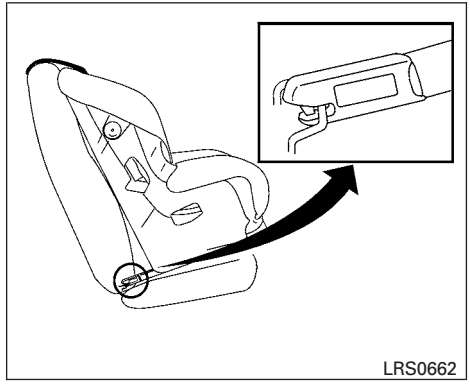

LATCH rigid-mounted attachment

When installing a child restraint, carefully read and follow the instructions in this manual and those supplied with the child restraint.

Top tether anchor

⚠ WARNING

- **Do not allow cargo to contact the top tether strap when it is attached to the top tether anchor. Properly secure the cargo so it does not contact the top tether strap. Cargo that is not properly secured or cargo that contacts the top tether strap may damage it during a collision. A child could be seriously injured or killed in a collision if the top tether strap is damaged.**
- **Child restraint anchorages are designed to withstand only those loads imposed by correctly fitted child restraints. Under no circumstances are they to be used to attach adult seat belts, or other items or equipment to the vehicle. Doing so could damage the child restraint anchorages. The child restraint will not be properly installed using the damaged anchorages, and a child could be seriously injured or killed in a collision.**

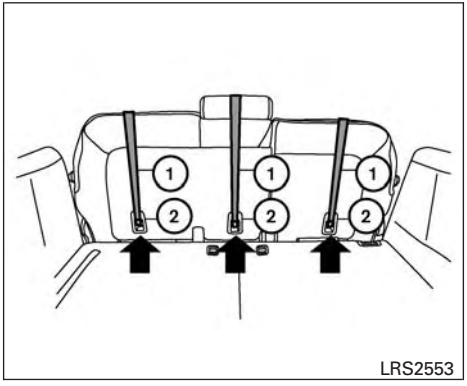

2nd row bench seat

① Top tether strap

② Anchor point

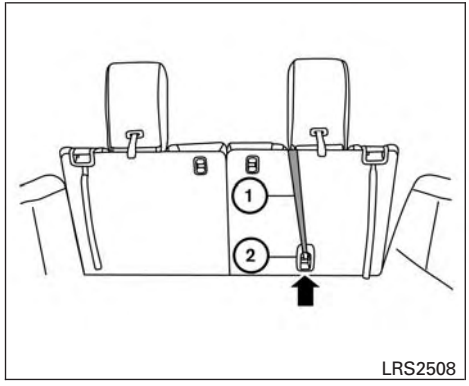

3rd row bench seat

① Top tether strap

② Anchor point

Top tether anchor point locations

Anchor points are located in the following locations:

- 2nd row bench on the bottom of the seatback in the seating positions shown.
- 3rd row bench on the bottom of the seatback on the passenger side seating position as shown.

If you have any questions when installing a top tether strap, it is recommended that you visit an INFINITI retailer for this service.

REAR-FACING CHILD RESTRAINT INSTALLATION USING LATCH

⚠ WARNING

Child restraint anchorages are designed to withstand only those loads imposed by correctly fitted child restraints. Under no circumstances are they to be used to attach adult seat belts, or other items or equipment to the vehicle. Doing so could damage the child restraint anchorages. The child restraint will not be properly installed using the damaged anchorages, and a child could be seriously injured or killed in a collision.

For additional information, refer to all Warnings and Cautions in the “Child safety” and “Child restraints” sections of this manual before installing a child restraint.

Do not use the lower anchors if the combined weight of the child and the child restraint exceeds 65 lbs (29.5 kg). If the combined weight of the child and the child restraint is greater than 65 lbs (29.5 kg), use the vehicle’s seat belt (not the lower anchors) to install the child restraint. Be

sure to follow the child restraint manufacturer's instructions for installation.

Follow these steps to install a rear-facing child restraint in the 2nd row seats using the LATCH system:

1. Position the child restraint on the seat. Always follow the child restraint manufacturer's instructions.

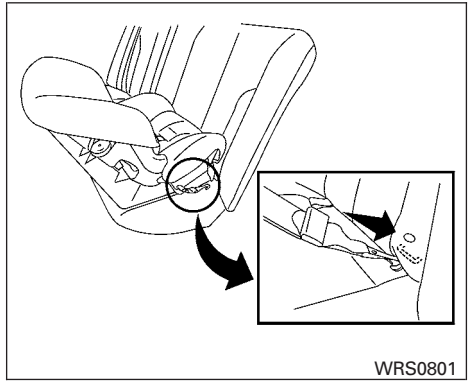

Rear-facing webbing-mounted – step 2

2. Secure the child restraint anchor attachments to the LATCH lower anchors. Check to make sure the LATCH attachment is properly attached to the lower anchors.

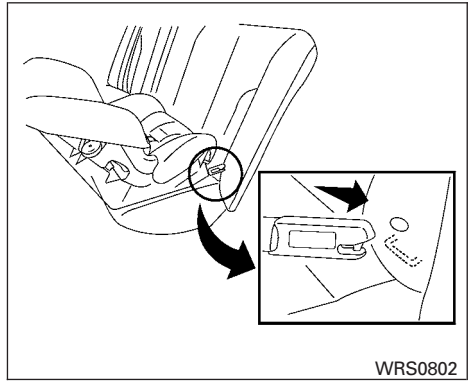

Rear-facing rigid-mounted – step 2

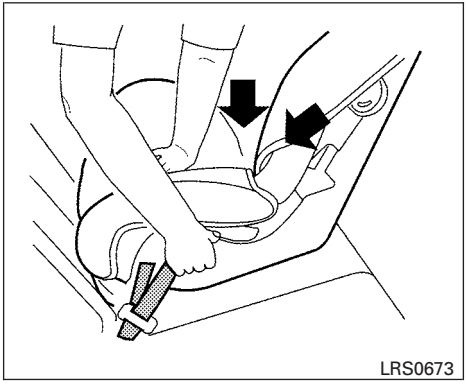

Rear-facing – step 3

3. For child restraints that are equipped with webbing-mounted attachments, remove any additional slack from the anchor attachments. Press downward and rearward firmly in the center of the child restraint with your hand to compress the vehicle seat cushion and seatback while tightening the webbing of the anchor attachments.

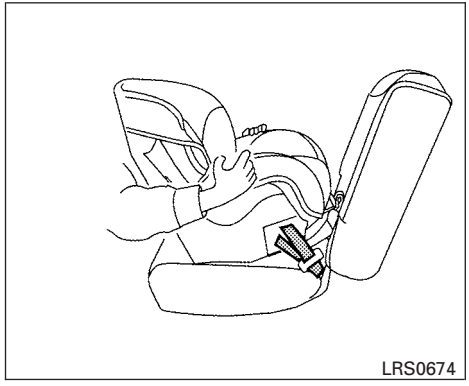

Rear-facing – step 4

4. After attaching the child restraint, test it before you place the child in it. Push it from side to side while holding the child restraint near the LATCH attachment path. The child restraint should not move more than 1 inch (25 mm), from side to side. Try to tug it forward and check to see if the LATCH attachment holds the restraint in place. If the restraint is not secure, tighten the LATCH attachment as necessary, or put the restraint in another seat and test it again. You may need to try a different child restraint or try installing by using the vehicle seat belt (if applicable). Not all child restraints fit in all types of vehicles.
5. Check to make sure the child restraint is properly secured prior to each use. If the child restraint is loose, repeat steps 2 through 4.

REAR-FACING CHILD RESTRAINT INSTALLATION USING THE SEAT BELTS

⚠ WARNING

The three-point seat belt with Automatic Locking Retractor (ALR) must be used when installing a child restraint. Failure to use the ALR mode will result in the child restraint not being properly secured. The restraint could tip over or be loose and cause injury to a child in a sudden stop or collision.

For additional information, refer to all Warnings and Cautions in the “Child safety” and “Child restraints” sections of this manual before installing a child restraint.

Do not use the lower anchors if the combined weight of the child and the child restraint exceeds 65 lbs (29.5 kg). If the combined weight of the child and the child restraint is greater than 65 lbs (29.5 kg), use the vehicle’s seat belt (not the lower anchors) to install the child restraint. Be

sure to follow the child restraint manufacturer's instructions for installation.

Follow these steps to install a rear-facing child restraint using the vehicle seat belts in the rear seats:

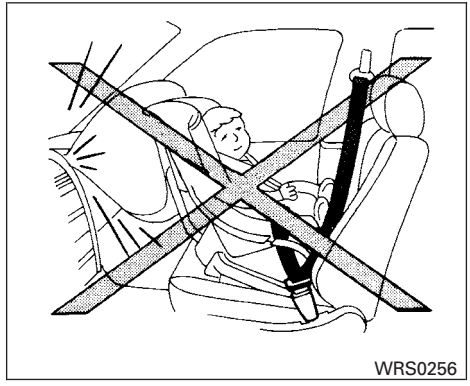

Rear-facing – step 1

1. **Child restraints for infants must be used in the rear-facing direction and therefore must not be used in the front seat.** Position the child restraint on the seat. Always follow the child restraint manufacturer's instructions.

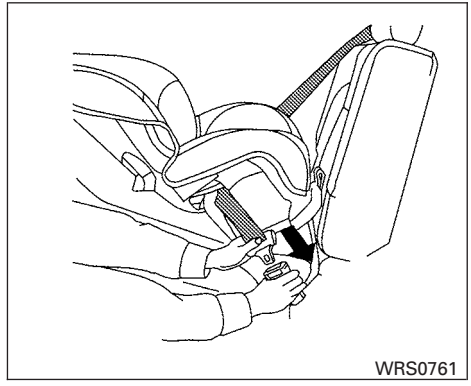

Rear-facing – step 2

2. Route the seat belt tongue through the child restraint and insert it into the buckle until you hear and feel the latch engage. Be sure to follow the child restraint manufacturer's instructions for belt routing.

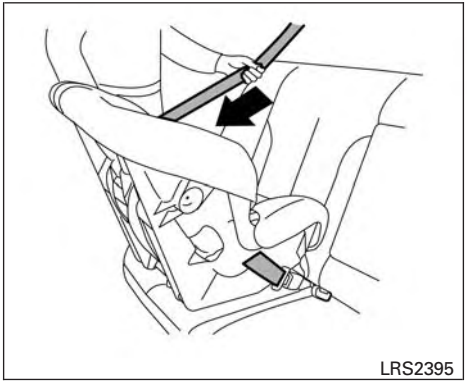

Rear-facing – step 3

3. Pull the shoulder belt until the belt is fully extended. At this time, the seat belt retractor is in the ALR mode (child restraint mode). It reverts to the ELR mode when the seat belt is fully retracted.

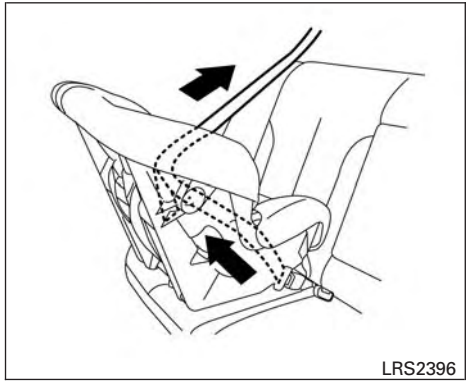

Rear-facing – step 4

4. Allow the seat belt to retract. Pull up on the shoulder belt to remove any slack in the belt.

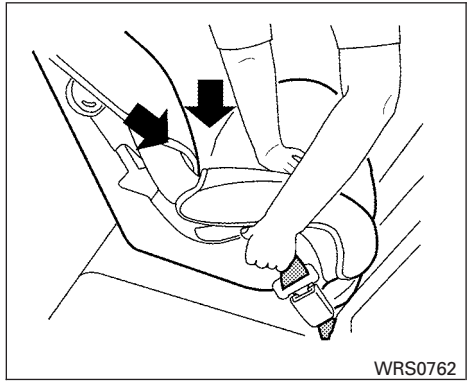

Rear-facing – step 5

5. Remove any additional slack from the seat belt; press downward and rearward firmly in the center of the child restraint to compress the vehicle seat cushion and seatback while pulling up on the seat belt.

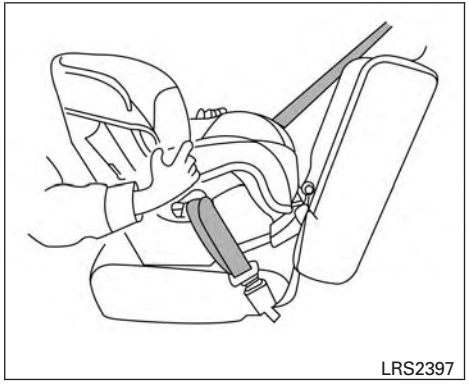

Rear-facing – step 6

6. After attaching the child restraint, test it before you place the child in it. Push it from side to side while holding the child restraint near the seat belt path. The child restraint should not move more than 1 inch (25 mm), from side to side. Try to tug it forward and check to see if the belt holds the restraint in place. If the restraint is not secure, tighten the seat belt as necessary, or put the restraint in another seat and test it again. You may need to try a different child restraint. Not all child restraints fit in all types of vehicles.
7. Check to make sure that the child restraint is properly secured prior to each use. If the seat belt is not locked, repeat steps 1 through 6.

After the child restraint is removed and the seat belt fully retracted, the ALR mode (child restraint mode) is canceled.

FORWARD-FACING CHILD RESTRAINT INSTALLATION USING LATCH

For additional information, refer to all Warnings and Cautions in the “Child safety” and “Child restraints” sections of this manual before installing a child restraint.

Do not use the lower anchors if the combined weight of the child and the child restraint exceeds 65 lbs (29.5 kg). If the combined weight of the child and the child restraint is greater than 65 lbs (29.5 kg), use the vehicle’s seat belt (not the lower anchors) to install the child restraint. Be sure to follow the child restraint manufacturer’s instructions for installation.

Follow these steps to install a forward-facing child restraint in the 2nd row seats using the LATCH system:

1. Position the child restraint on the seat. Always follow the child restraint manufacturer’s instructions.

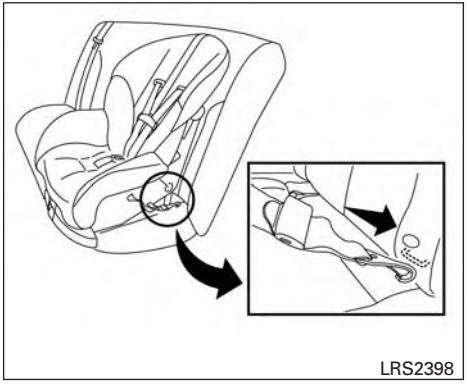

Forward-facing webbing-mounted – step 2

2. Secure the child restraint anchor attachments to the LATCH lower anchors. Check to make sure the LATCH attachment is properly attached to the lower anchors.

   If the child restraint is equipped with a top tether strap, route the top tether strap and secure the tether strap to the tether anchor point. For additional information, refer to “Installing top tether strap” in this section.

   Do not install child restraints that require the use of a top tether strap in seating positions that do not have a top tether anchor.

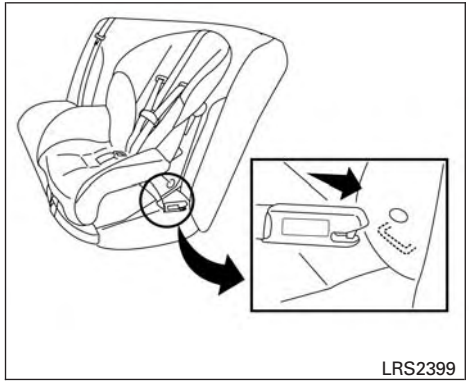

Forward-facing rigid-mounted – step 2

3. The back of the child restraint should be secured against the vehicle seatback.

   If necessary, adjust or remove the head restraint/headrest to obtain the correct child restraint fit. If the head restraint/headrest is removed, store it in a secure place. **Be sure to reinstall the head restraint/headrest when the child restraint is removed.** For additional information about head restraint/headrest adjustment, refer to “Head restraints/headrests” in this section.

If the seating position does not have an adjustable head restraint/headrest and it is interfering with the proper child restraint fit, try another seating position or a different child restraint.

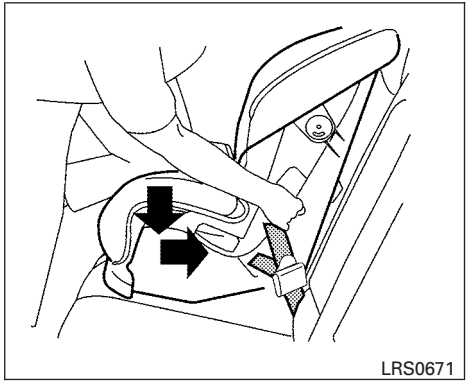

Forward-facing – step 4

4. For child restraints that are equipped with webbing-mounted attachments, remove any additional slack from the anchor attachments. Press downward and rearward firmly in the center of the child restraint with your knee to compress the vehicle seat cushion and seatback while tightening the webbing of the anchor attachments.

5. Tighten the tether strap according to the manufacturer's instructions to remove any slack.

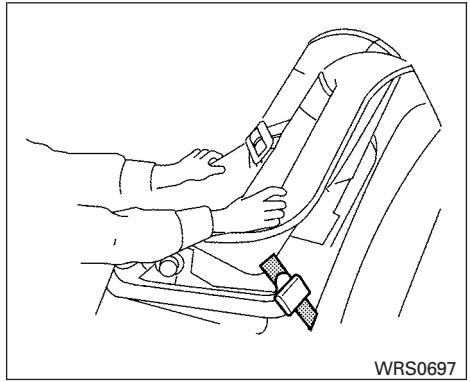

Forward-facing – step 6

6. After attaching the child restraint, test it before you place the child in it. Push it from side to side while holding the child restraint near the LATCH attachment path. The child restraint should not move more than 1 inch (25 mm), from side to side. Try to tug it forward and check to see if the LATCH attachment holds the restraint in place. If the restraint is not secure, tighten the LATCH attachment as necessary, or put the restraint in another seat and test it again. You may need to try a different child restraint. Not all child restraints fit in all types of vehicles.

7. Check to make sure the child restraint is properly secured prior to each use. If the child restraint is loose, repeat steps 3 through 6.

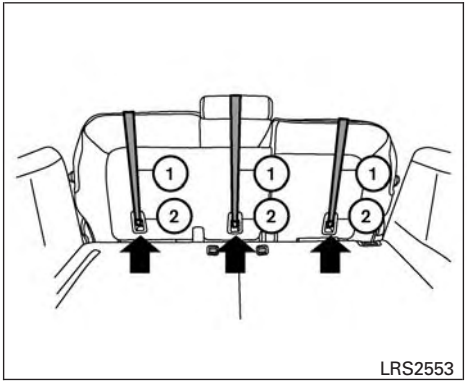

2nd row bench seat

① Top tether strap

② Anchor point

Installing top tether strap

The child restraint top tether strap must be used when installing the child restraint with the LATCH lower anchor attachments.

First, secure the child restraint with the LATCH lower anchors (2nd row bench outboard seating positions only).

2nd row bench seat

OUTBOARD SEATING POSITIONS

1. Remove the head restraint/headrest and store it in a secure place. Be sure to reinstall the head restraint/headrest when the child restraint is removed. For additional information about head restraint/headrest adjustment, removal and installation, refer to "Head restraints/headrests" in this section.
2. Position the top tether strap ① over the seatback.
3. Secure the tether strap to the tether anchor point ② on the bottom of the seatback behind the child restraint.
4. Tighten the tether strap according to the manufacturer's instructions to remove any slack.

If you have any questions when installing a top tether strap, it is recommended that you visit an INFINITI retailer for this service.

⚠ WARNING

Child restraint anchorages are designed to withstand only those loads imposed by correctly fitted child restraints. Under no circumstances are they to be used to attach adult seat belts, or other items or equipment to the vehicle. Doing so could damage the child restraint anchorages. The child restraint will not be properly installed using the damaged anchorage, and a child could be seriously injured or killed in a collision.

FORWARD-FACING CHILD RESTRAINT INSTALLATION USING THE SEAT BELTS

⚠ WARNING

The three-point seat belt with Automatic Locking Retractor (ALR) must be used when installing a child restraint. Failure to use the ALR mode will result in the child restraint not being properly secured. The restraint could tip over or be loose and cause injury to a child in a sudden stop or collision. Also, it can change the operation of the front passenger air bag. For additional information, refer to "Front passenger air bag and status light" in this section.

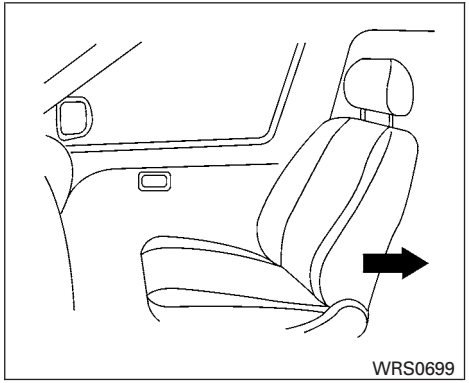

Forward-facing (front passenger seat) – step 1

For additional information, refer to all Warnings and Cautions in the “Child safety” and “Child restraints” sections of this manual before installing a child restraint.

Do not use the lower anchors if the combined weight of the child and the child restraint exceeds 65 lbs (29.5 kg). If the combined weight of the child and the child restraint is greater than 65 lbs (29.5 kg), use the vehicle’s seat belt (not the lower anchors) to install the child restraint. Be sure to follow the child restraint manufacturer’s instructions for installation.

Follow these steps to install a forward-facing child restraint using the vehicle seat belt in the rear seats or in the front passenger seat:

1. **If you must install a child restraint in the front seat, it should be placed in a forward-facing direction only. Move the seat to the rearmost position. Child restraints for infants must be used in the rear-facing direction and, therefore, must not be used in the front seat.**
2. Position the child restraint on the seat. Always follow the child restraint manufacturer’s instructions.

   The back of the child restraint should be secured against the vehicle seatback.

   If necessary, adjust or remove the head restraint/headrest to obtain the correct child restraint fit. If the head restraint/headrest is removed, store it in a secure place. **Be sure to reinstall the head restraint/headrest when the child restraint is removed.** For additional information about head restraint/headrest adjustment, removal and installation, refer to “Head restraints/headrests” in this section.

   If the seating position does not have an adjustable head restraint/headrest and it is interfering with the proper child restraint fit, try another seating position or a different child restraint.

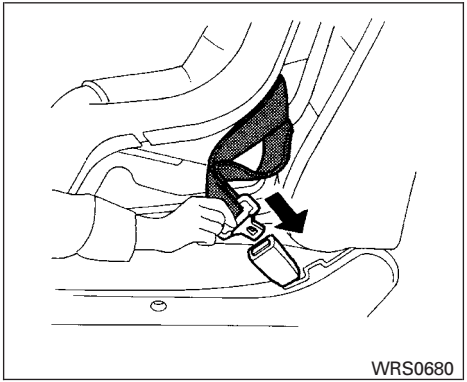

Forward-facing – step 3

3. Route the seat belt tongue through the child restraint and insert it into the buckle until you hear and feel the latch engage. Be sure to follow the child restraint manufacturer's instructions for belt routing.

   If the child restraint is equipped with a top tether strap, route the top tether strap and secure the tether strap to the tether anchor point (rear seat installation only). For additional information, refer to "Installing top tether strap" in this section.

   Do not install child restraints that require the use of a top tether strap in seating positions that do not have a top tether anchor.

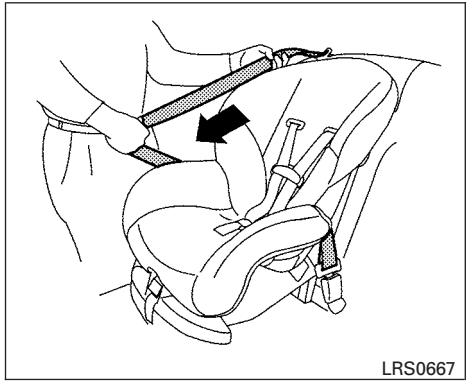

Forward-facing – step 4

4. Pull the shoulder belt until the belt is fully extended. At this time, the seat belt retractor is in the ALR mode (child restraint mode). It reverts to ELR mode when the seat belt is fully retracted.

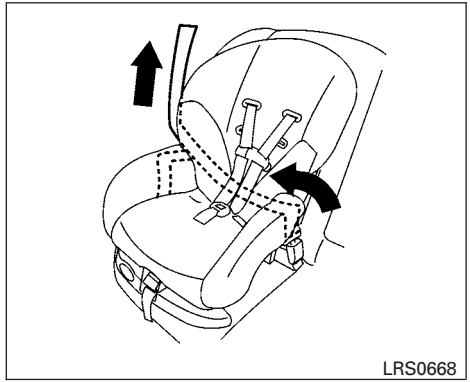

Forward-facing – step 5

5. Allow the seat belt to retract. Pull up on the shoulder belt to remove any slack in the belt.

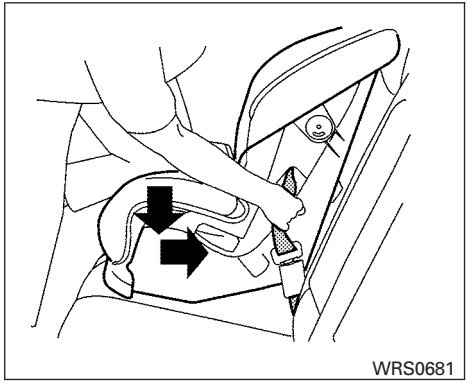

Forward-facing – step 6

6. Remove any additional slack from the seat belt; press downward and rearward firmly in the center of the child restraint with your knee to compress the vehicle seat cushion and seatback while pulling up on the seat belt.
7. Tighten the tether strap according to the manufacturer's instructions to remove any slack.

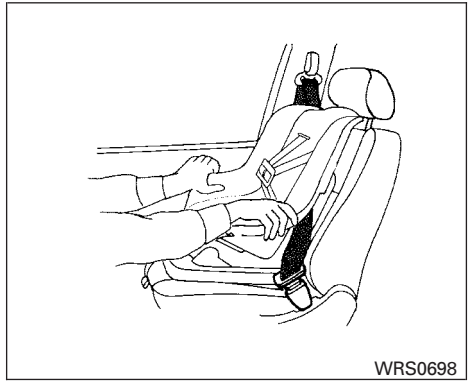

Forward-facing – step 8

8. After attaching the child restraint, test it before you place the child in it. Push it from side to side while holding the child restraint near the seat belt path. The child restraint should not move more than 1 inch (25 mm), from side to side. Try to tug it forward and check to see if the belt holds the restraint in place. If the restraint is not secure, tighten the seat belt as necessary, or put the restraint in another seat and test it again. You may need to try a different child restraint. Not all child restraints fit in all types of vehicles.
9. Check to make sure the child restraint is properly secured prior to each use. If the seat belt is not locked, repeat steps 2 through 8.

Forward-facing – step 10

10. If the child restraint is installed in the front passenger seat, place the ignition switch in the ON position. The front passenger air bag status light should illuminate. If this light is not illuminated refer to “Front passenger air bag and status light” in this section. **Move the child restraint to another seating position.** Have the system checked. It is recommended you visit an INFINITI retailer for this service.

After the child restraint is removed and the seat belt is fully retracted, the ALR mode (child restraint mode) is canceled.

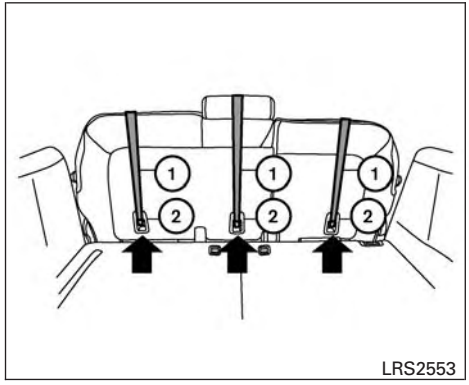

2nd row bench seat

① Top tether strap

② Anchor point

Installing top tether strap

The child restraint top tether strap must be used when installing the child restraint with seat belts.

First, secure the child restraint with the seat belt.

2nd row bench seat

OUTBOARD SEATING POSITIONS

1. Remove the head restraint/headrest and store it in a secure place. Be sure to reinstall the head restraint/headrest when the child restraint is removed. For additional information about head restraint/headrest adjustment, removal and installation, refer to “Head restraints/headrests” in this section.
2. Position the top tether strap ① over the seatback.
3. Secure the tether strap to the tether anchor point ② on the bottom of the seatback behind the child restraint.
4. Tighten the tether strap according to the manufacturer’s instructions to remove any slack.

CENTER SEATING POSITION

1. Position the top tether strap ① over the seatback.
2. Secure the tether strap to the tether anchor point ② on the bottom of the seatback behind the child restraint.
3. Tighten the tether strap according to the manufacturer’s instructions to remove any slack.

If you have any questions when installing a top tether strap, it is recommended you visit an INFINITI retailer for this service.

⚠ WARNING

Child restraint anchorages are designed to withstand only those loads imposed by correctly fitted child restraints. Under no circumstances are they to be used to attach adult seat belts, or other items or equipment to the vehicle. Doing so could damage the child restraint anchorages. The child restraint will not be properly installed using the damaged anchorage, and a child could be seriously injured or killed in a collision.

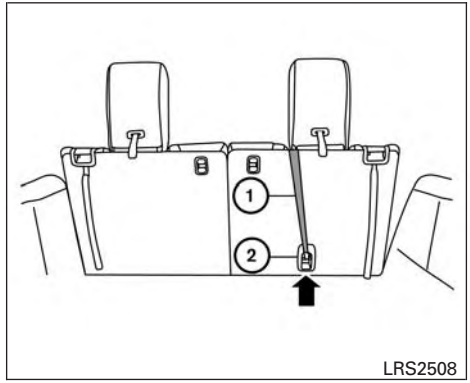

3rd row bench seat

① Top tether strap

② Anchor point

3rd row bench seat

⚠ WARNING

In the 3rd row bench seat, a child restraint with a top tether strap can only be used on the passenger side seating position. Do not place in the driver's side seating position and attempt to angle the tether strap to the passenger side seating position.

The passenger side of the 3rd row bench seat is the seating position that can use a top tether strap. First, secure the child restraint with the seat belt, as applicable.

1. Position the top tether strap ① to the inboard side of the head restraint/headrest as shown.
2. Secure the tether strap to the tether anchor point ② on the bottom of the seatback behind the child restraint.
3. Tighten the tether strap according to the manufacturer's instructions to remove any slack. Make sure the head restraint/headrest does not contact the top tether strap.

If you have any questions when installing a top tether strap, it is recommended that you visit an INFINITI retailer for this service.

⚠ WARNING

Child restraint anchorages are designed to withstand only those loads imposed by correctly fitted child restaints. Under no circumstances are they to be used to attach adult seat belts, or other items or equipment to the vehicle. Doing so could damage the child restraint anchorages. The child restraint will not be properly installed using the damaged anchorage, and a child could be seriously injured or killed in a collision.

BOOSTER SEATS

For additional information on installing a booster seat in your vehicle, follow the instructions outlined in this section.

Precautions on booster seats

⚠ WARNING

If a booster seat and seat belt are not used properly, the risk of a child being injured or killed in a sudden stop or collision greatly increases:

- **Make sure the shoulder portion of the belt is away from the child's face and neck and the lap portion of the belt does not cross the stomach.**
- **Make sure the shoulder belt is not behind the child or under the child's arm.**
- **A booster seat must only be installed in a seating position that has a lap/shoulder belt.**

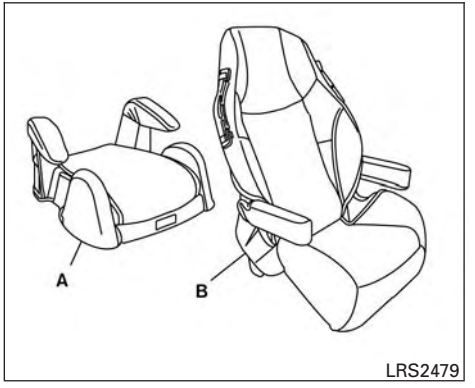

A. Low back booster seat

B. High back booster seat

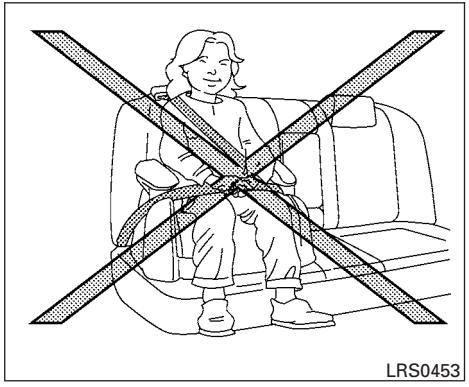

Booster seats of various sizes are offered by several manufacturers. When selecting any booster seat, keep the following points in mind:

- Choose only a booster seat with a label certifying that it complies with Federal Motor Vehicle Safety Standard 213 or Canadian Motor Vehicle Safety Standard 213.
- Check the booster seat in your vehicle to be sure it is compatible with the vehicle's seat and seat belt system.

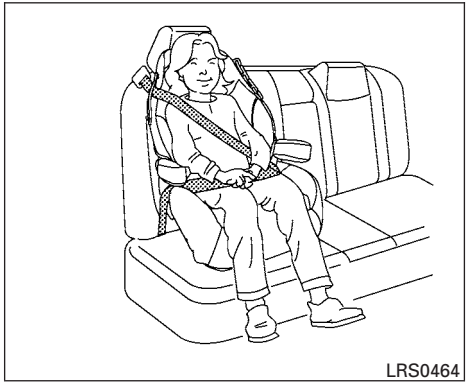

- Make sure the child's head will be properly supported by the booster seat or vehicle seat. The seatback must be at or above the center of the child's ears. For example, if a low back booster seat is chosen, the vehicle seatback must be at or above the center of the child's ears. If the seatback is lower than the center of the child's ears, a high back booster seat should be used.
- If the booster seat is compatible with your vehicle, place the child in the booster seat and check the various adjustments to be sure the booster seat is compatible with the child. Always follow all recommended procedures.

All U.S. states and Canadian provinces or territories require that infants and small children be restrained in an approved child restraint at all times while the vehicle is being operated.

The instructions in this section apply to booster seat installation in the rear seats or the front passenger seat.

Booster seat installation

⚠ WARNING

To avoid injury to child, do not use the lap/shoulder belt in the Automatic Locking Retractor (ALR) mode when using a booster seat with the seat belts.

For additional information, refer to all Warnings and Cautions in the "Child safety," "Child restraints" and "Booster seats" sections of this manual before installing a child restraint.

Follow these steps to install a booster seat in the 2nd or 3rd rows or in the front passenger seat:

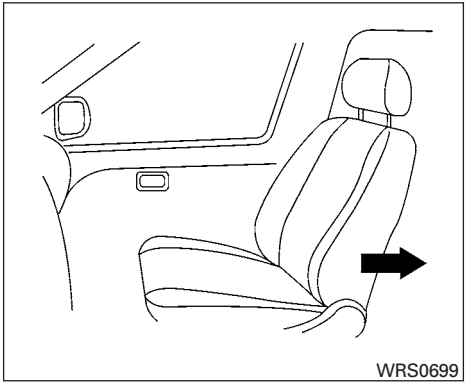

1. **If you must install a booster seat in the front seat, move the seat to the rear-most position.**
2. Position the booster seat on the seat. Only place it in a front-facing direction. Always follow the booster seat manufacturer's instructions.

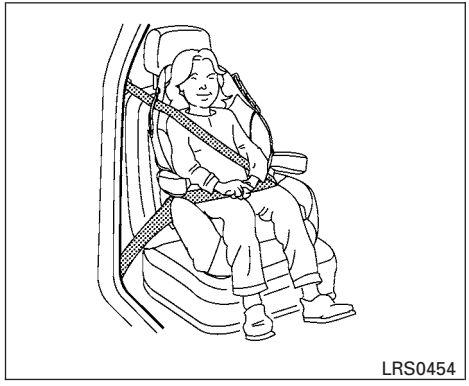

Front passenger position

3. The booster seat should be positioned on the vehicle seat so that it is stable.

   If necessary, adjust or remove the head restraint/headrest to obtain the correct booster seat fit. If the head restraint/headrest is removed, store it in a secure place. **Be sure to reinstall the head restraint/headrest when the booster seat is removed.** For additional information about head restraint/headrest adjustment, removal and installation, refer to "Head restraints/headrests" in this section.

   If the seating position does not have an adjustable head restraint/headrest and it is interfering with the proper booster seat fit, try another seating position or a different booster seat.
4. Position the lap portion of the seat belt low and snug on the child's hips. Be sure to follow the booster seat manufacturer's instructions for adjusting the seat belt routing.
5. Pull the shoulder belt portion of the seat belt toward the retractor to take up extra slack. Be sure the shoulder belt is positioned across the top, middle portion of the child's shoulder. Be sure to follow the booster seat manufacturer's instructions for adjusting the seat belt routing.
6. Follow the warnings, cautions and instructions for properly fastening a seat belt shown in "Three-point type seat belt with retractor" in this section.

7. If the booster seat is installed in the front passenger seat, place the ignition switch in the ON position. The front passenger air bag status light may or may not illuminate, depending on the size of the child and the type of booster seat being used. For additional information, refer to “Front passenger air bag and status light” in this section.

PRECAUTIONS ON SRS

This SRS section contains important information concerning the following systems:

- Driver and front passenger supplemental front-impact air bag (INFINITI Advanced Air Bag System)
- Front seat-mounted side-impact supplemental air bag
- Roof-mounted curtain side-impact and rollover supplemental air bag
- Seat belt with pretensioner(s) (front seats)

Supplemental front-impact air bag system

The INFINITI Advanced Air Bag System can help cushion the impact force to the head and chest of the driver and front passenger in certain frontal collisions.

Front seat-mounted side-impact supplemental air bag system

This system can help cushion the impact force to the chest area of the driver and front passenger in certain side-impact collisions. The side air bags are designed to inflate on the side where the vehicle is impacted.

Roof-mounted curtain side-impact and rollover supplemental air bag system

This system can help cushion the impact force to the head of occupants in front and rear outboard seating positions in certain side-impact or rollover collisions. In a side impact, the curtain air bags are designed to inflate on the side where the vehicle is impacted. In a rollover, the curtain air bags are designed to inflate and remain inflated for a short time.

The SRS is designed to **supplement** the crash protection provided by the driver and front passenger seat belts and is **not a substitute** for them. Seat belts should always be correctly worn and the occupant seated a suitable distance away from the steering wheel, instrument panel and door finishers. For additional information about instructions and precautions on seat belt usage, refer to “Seat belts” in this section.

The supplemental air bags operate only when the ignition switch is placed in the ON position.

After placing the ignition switch in the ON position, the supplemental air bag warning light illuminates. The supplemental air bag warning light will turn off after about 7 seconds if the system is operational.

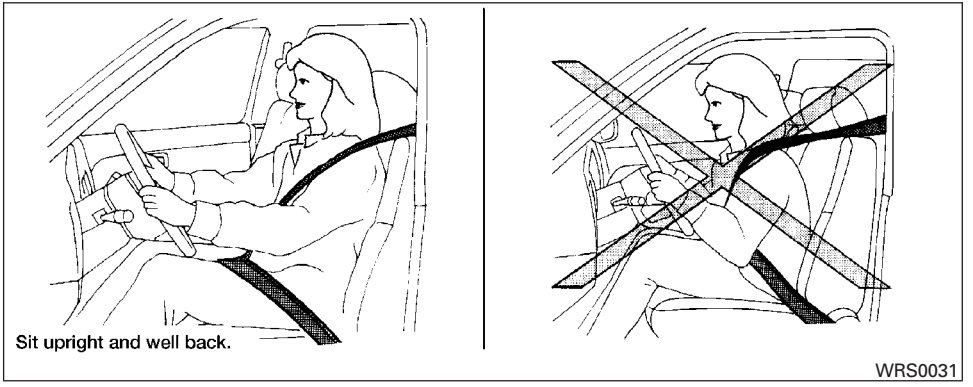

⚠WARNING

- **The front air bags ordinarily will not inflate in the event of a side impact, rear impact, rollover, or lower severity frontal collision. Always wear your seat belts to help reduce the risk or severity of injury in various kinds of accidents.**
- **The front passenger air bag will not inflate if the passenger air bag status light is lit or if the front passenger seat is unoccupied. For additional information, refer to "Front passenger air bag and status light" in this section.**
- **The seat belts and the front air bags are most effective when you are sitting well back and upright in the seat. The front air bags inflate with great force. Even with the INFINITI Advanced Air Bag System, if you are unrestrained, leaning forward, sitting sideways or out of position in any way, you are at greater risk of injury or death in a crash. You may also receive serious or fatal injuries from the front air bag if you are up against it when it inflates. Always sit back against the seatback and as far away as practical from the steering wheel or instrument panel. Always properly use the seat belts.**
- **The driver and front passenger seat belt buckles are equipped with sensors that detect if the seat belts are fastened. The INFINITI Advanced Air Bag System monitors the severity of a collision and seat belt usage then inflates the air bags as needed. Failure to properly wear seat belts can increase the risk or severity of injury in an accident.**
- **The front passenger seat is equipped with an occupant classification sensor (weight sensor) that turns the front passenger air bag OFF under some conditions. This sensor is only used in this seat. Failure to be properly seated and wearing the seat belt can increase the risk or severity of injury in an accident. For additional information, refer to "Front passenger air bag and status light" in this section.**
- **Keep hands on the outside of the steering wheel. Placing them inside the steering wheel rim could increase the risk that they are injured when the front air bag inflates.**

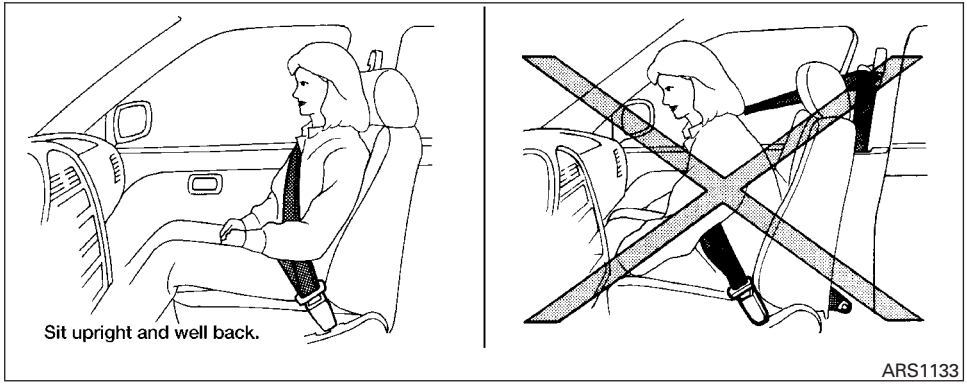

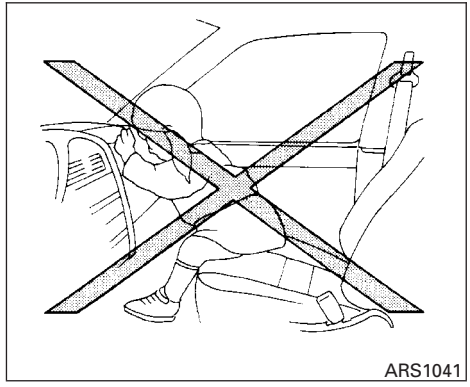

⚠ WARNING

- **Never let children ride unrestrained or extend their hands or face out of the window. Do not attempt to hold them in your lap or arms. Some examples of dangerous riding positions are shown in the illustrations.**

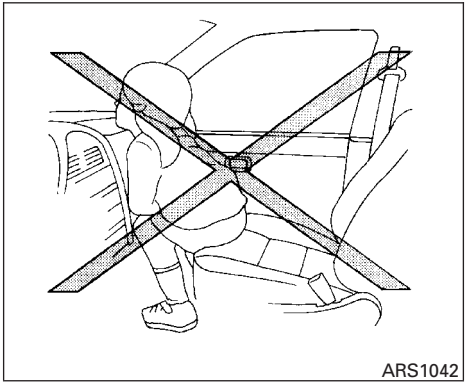
ARS1042

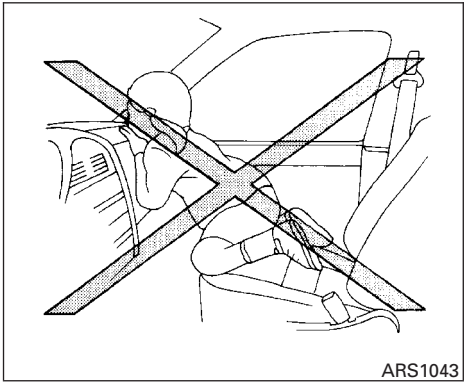
ARS1043

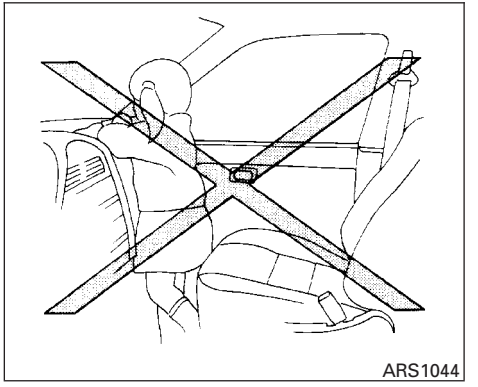
ARS1044

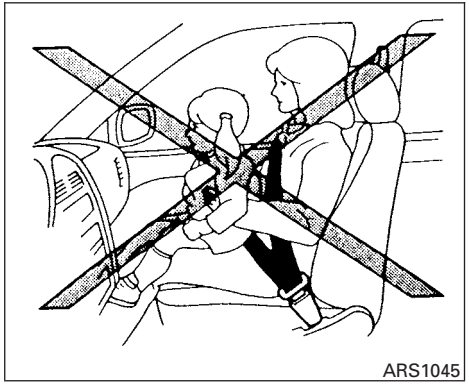

ARS1045

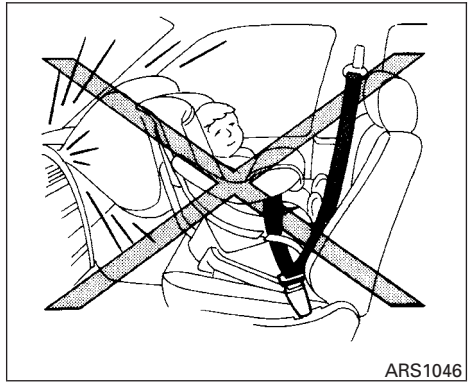

ARS1046

⚠ WARNING

- **Children may be severely injured or killed when the front air bags, side air bags or curtain air bags inflate if they are not properly restrained. Pre-teens and children should be properly restrained in the rear seat, if possible.**
- **Even with the INFINITI Advanced Air Bag System, never install a rear-facing child restraint in the front seat. An inflating front air bag could seriously injure or kill your child. For additional information, refer to "Child restraints" in this section.**

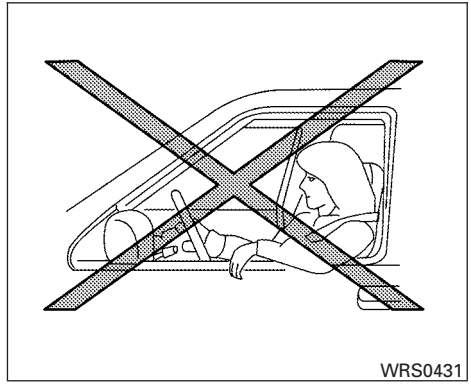

WRS0431

⚠ WARNING

Front seat-mounted side-impact supplemental air bags and roof-mounted curtain side-impact and rollover supplemental air bags:

- **The side air bags and curtain air bags ordinarily will not inflate in the event of a frontal impact, rear impact, or lower severity side collision. Always wear your seat belts to help reduce the risk or severity of injury in various kinds of accidents.**

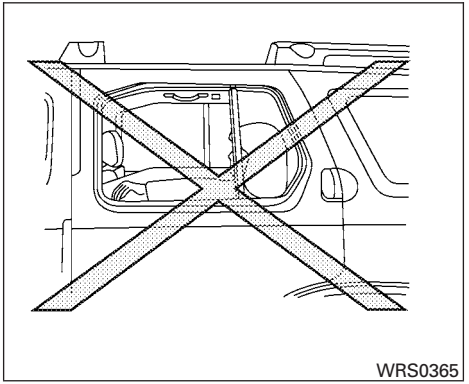
WRS0365

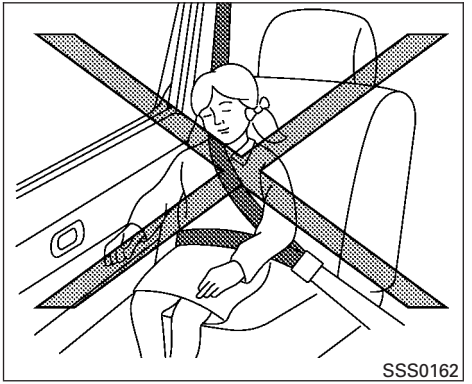
SSS0162

⚠ WARNING

- **The seat belts, the side air bags and curtain air bags are most effective when you are sitting well back and upright in the seat with both feet on the floor. The side air bag and curtain air bag inflate with great force. Do not allow anyone to place their hand, leg or face near the side air bag on the side of the seatback of the front seat or near the side roof rails. Do not allow anyone sitting in the front seats or rear outboard seats to extend their hand out of the window or lean against the door. Some examples of dangerous riding positions are shown in the previous illustrations.**

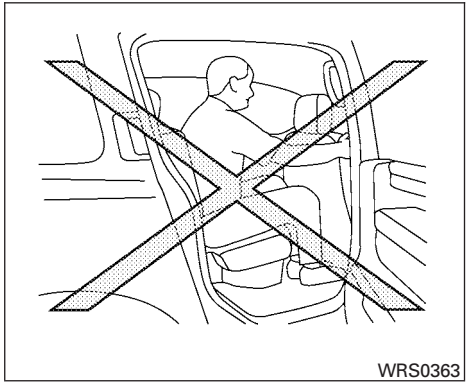
WRS0363

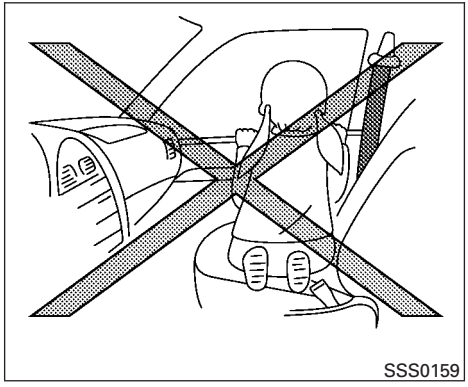
SSS0159

⚠ WARNING

- **When sitting in the 2nd row rear seat, do not hold onto the seatback of the front seat. If the side air bag inflates, you may be seriously injured. Be especially careful with children, who should always be properly restrained. Some examples of dangerous riding positions are shown in the illustrations.**
- **Do not use seat covers on the front seatbacks. They may interfere with side air bag inflation.**

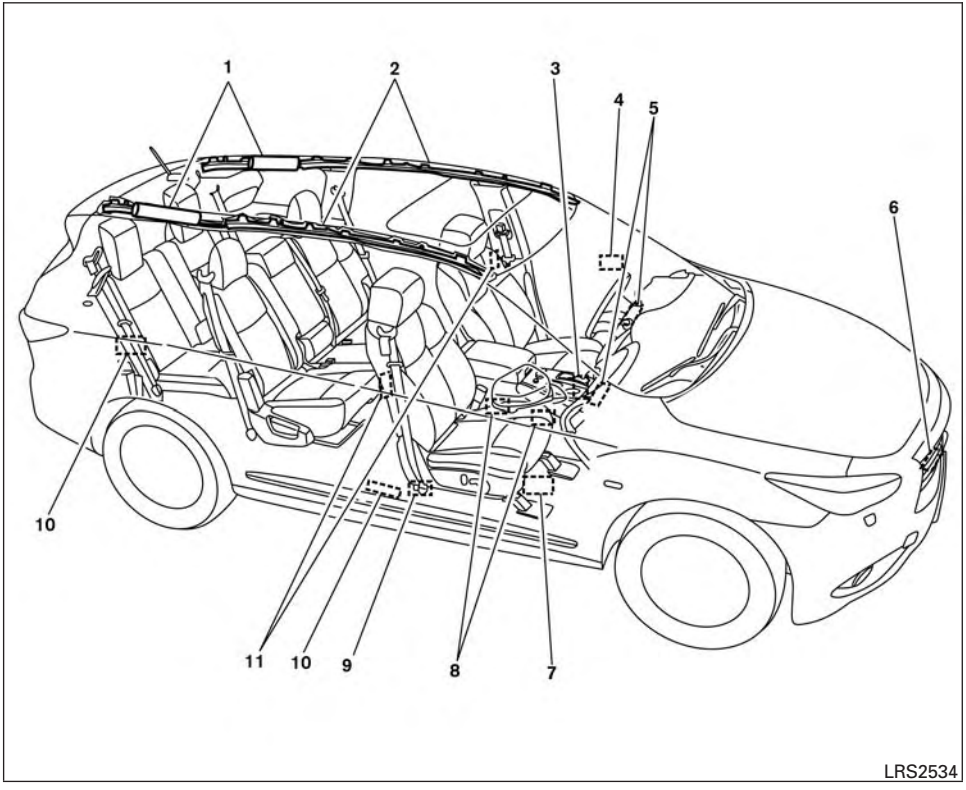

INFINITI Advanced Air Bag System (front seats)

1. Roof-mounted curtain side-impact and roll-over supplemental air bag inflators
2. Roof-mounted curtain side-impact and roll-over supplemental air bags
3. Air bag Control Unit (ACU)
4. Pressure sensors in door (driver's side shown; front passenger side similar)
5. Supplemental front-impact air bag modules
6. Crash zone sensor
7. Occupant classification system control unit
8. Occupant classification sensor (weight sensor – located on passenger seat frame)
9. Seat belt with pretensioner(s) (front seats)
10. Satellite sensors
11. Front seat-mounted side-impact supplemental air bag modules

⚠ WARNING

To ensure proper operation of the passenger's INFINITI Advanced Air Bag System, please observe the following items.

- **Do not allow a passenger in the rear seat to push or pull on the seatback pocket.**
- **Do not place heavy loads heavier than 2.2 lb (1 kg) on the seatback, head restraint/headrest or in the seatback pocket.**
- **Do not store luggage behind the seat that can press into the seatback.**
- **Do not position the front passenger seat so it contacts the rear seat. If the front seat does contact the rear seat, the air bag system may determine a sensor malfunction has occurred and the front passenger air bag status light may illuminate and the supplemental air bag warning light may flash.**
- **If a forward-facing child restraint is installed in the front passenger seat, do not position the front passenger seat so the child restraint contacts the instrument panel. If the child restraint does contact the instrument panel, the system may determine the seat is occupied and the passenger air bag may deploy in a collision. Also the front passenger air bag status light may not illuminate. For additional information about installing and using child restraints, refer to "Child restraints" in this section.**
- **Confirm the operating condition with the front passenger air bag status light.**
- **If you notice that the front passenger air bag status light is not operating as described in this section. It is recommended that you visit an INFINITI retailer to check the occupant classification system.**
- **Until you have confirmed with a retailer that your passenger seat occupant classification system is working properly, position the occupants in the rear seating positions.**

This vehicle is equipped with the INFINITI Advanced Air Bag System for the driver and front passenger seats. This system is designed to meet certification requirements under U.S. regulations. It is also permitted in Canada. **All of the information, cautions and warnings in this manual still apply and must be followed.**

The driver supplemental front-impact air bag is located in the center of the steering wheel. The front passenger supplemental front-impact air bag is mounted in the dashboard above the glove box. The front air bags are designed to inflate in higher severity frontal collisions, although they may inflate if the forces in another type of collision are similar to those of a higher severity frontal impact. They may not inflate in certain frontal collisions. Vehicle damage (or lack of it) is not always an indication of proper front air bag system operation.

The INFINITI Advanced Air Bag System monitors information from the crash zone sensor, the Air bag Control Unit (ACU), seat belt buckle sensor and occupant classification sensor (weight sensor). Inflator operation is based on the severity of a collision and seat belt usage for the driver. For the front passenger, the occupant classification sensor is also monitored. Based on information from the sensor, only one front air bag may inflate in a crash, depending on the crash severity and whether the front occupants are belted or un-

belted. Additionally, the front passenger air bag may be automatically turned off under some conditions, depending on the weight detected on the passenger seat and how the seat belt is used. If the front passenger air bag is OFF, the front passenger air bag status light will be illuminated (if the seat is unoccupied, the light will not be illuminated, but the air bag will be off). For additional information, refer to “Front passenger air bag and status light” in this section. One front air bag inflating does not indicate improper performance of the system.

If you have any questions about your air bag system, it is recommended that you visit an INFINITI retailer to obtain information about the system. If you are considering modification of your vehicle due to a disability, you may also contact INFINITI. Contact information is contained in the front of this Owner’s Manual.

When a front air bag inflates, a fairly loud noise may be heard, followed by the release of smoke. This smoke is not harmful and does not indicate a fire. Care should be taken to not inhale it, as it may cause irritation and choking. Those with a history of a breathing condition should get fresh air promptly.

Front air bags, along with the use of seat belts, help to cushion the impact force on the face and chest of the front occupants. They can help save lives and reduce serious injuries. However, an inflating front air bag may cause facial abrasions or other injuries. Front air bags do not provide restraint to the lower body.

Even with INFINITI Advanced Air Bags, seat belts should be correctly worn and the driver and passenger seated upright as far as practical away from the steering wheel or instrument panel. The front air bags inflate quickly in order to help protect the front occupants. Because of this, the force of the front air bag inflating can increase the risk of injury if the occupant is too close to, or is against, the front air bag module during inflation.

The front air bags deflate quickly after a collision.

The front air bags operate only when the ignition switch is placed in the ON position.

After placing the ignition switch in the ON position, the supplemental air bag warning light illuminates. The supplemental air bag warning light will turn off after about 7 seconds if the system is operational.

Front passenger air bag and status light

⚠ WARNING

The front passenger air bag is designed to automatically turn OFF under some conditions. Read this section carefully to learn how it operates. Proper use of the seat, seat belt and child restraints is necessary for most effective protection. Failure to follow all instructions in this manual concerning the use of seats, seat belts and child restraints can increase the risk or severity of injury in an accident.

Status light

The front passenger seat is equipped with an occupant classification sensor (weight sensor) that turns the front passenger air bag on or off depending on the weight applied to the front passenger seat. The status of the front passenger air bag (ON or OFF) is indicated by the front passenger air bag status light which is located on the instrument panel.

After the ignition switch is placed in the "ON" position, the front passenger air bag status light on the instrument panel illuminates for about 7 seconds and then turns off or remains illuminated depending on the front passenger seat occupied status. The light operates as follows:

- Unoccupied front passenger's seat: The light is OFF and the front passenger air bag is OFF and will not inflate in a crash.
- Front passenger seat occupied by a small adult, child or child restraint as outlined in this section: The light illuminates to indicate that the front passenger air bag is OFF and will not inflate in a crash.
- Occupied front passenger seat and the passenger meets the conditions as outlined in this section: The light is OFF to indicate that the front passenger air bag is operational.

In addition to the above, certain objects placed on the front passenger seat may also cause the light to operate as described above depending on their weight.

For additional information related to the normal operation and troubleshooting of this occupant classification sensor system, please refer to "Normal operation" and "Troubleshooting" in this section.

Front passenger air bag

The front passenger air bag is designed to automatically turn OFF when the vehicle is operated under some conditions as described below in accordance with U.S. regulations. If the front passenger air bag is OFF, it will not inflate in a crash. The driver air bag and other air bags in your vehicle are not part of this system.

The purpose of the regulation is to help reduce the risk of injury or death from an inflating air bag to certain front passenger seat occupants, such as children, by requiring the air bag to be automatically turned OFF. Certain sensors are used to meet the requirements.

The occupant classification sensor in this vehicle is a weight sensor. It is designed to detect an occupant and objects on the seat by weight. For example, if a child is in the front passenger seat, the INFINITI Advanced Air Bag System is designed to turn the front passenger air bag OFF in accordance with the regulations. Also, if a child restraint of the type specified in the regulations is on the seat, its weight and the child's weight can be detected and cause the air bag to turn OFF.

Front passenger seat adult occupants who are properly seated and using the seat belt as outlined in this manual should not cause the front passenger air bag to be automatically turned OFF. For small adults it may be turned OFF, however if the occupant takes his/her weight off the seat cushion (for example, by not sitting upright, by sitting on an edge of the seat, or by otherwise being out of position), this could cause the sensor to turn the air bag OFF. Always be sure to be seated and wearing the seat belt properly for the most effective protection by the seat belt and supplemental air bag.

INFINITI recommends that pre-teens and children be properly restrained in a rear seat. INFINITI also recommends that appropriate child restraints and booster seats be properly installed in a rear seat. If this is not possible, the occupant classification sensor is designed to operate as described above to turn the front passenger air bag OFF for specified child restraints as required by the regulations. Failing to properly secure child restraints and to use the ALR mode may allow the restraint to tip or move in a collision or sudden stop. This can also result in the passen-

ger air bag inflating in a crash instead of being OFF. For additional information about proper use and installation, refer to “Child restraints” in this section.

If the front passenger seat is not occupied, the front passenger air bag is designed not to inflate in a crash. However, heavy objects placed on the seat could result in air bag inflation, because of the object’s weight detected by the occupant classification sensor. Other conditions could also result in air bag inflation, such as if a child is standing on the seat, or if two children are on the seat, contrary to the instructions in this manual. Always be sure that you and all vehicle occupants are seated and restrained properly.

Using the front passenger air bag status light, you can monitor when the front passenger air bag is automatically turned OFF with the seat occupied. The light will not illuminate when the front passenger seat is unoccupied.

If an adult occupant is in the seat but the front passenger air bag status light is illuminated (indicating that the air bag is OFF), it could be that the person is a small adult, or is not sitting on the seat properly or not using the seat belt properly.

If a child restraint must be used in the front seat, the front passenger air bag status light may or may not be illuminated, depending on the size of the child and the type of child restraint being used. If the air bag status light is not illuminated (indicating that the air bag might inflate in a crash), it could be that the child restraint or seat belt is not being used properly. Make sure that the child restraint is installed properly, the seat belt is used properly and the occupant is positioned properly. If the air bag status light is still not illuminated, reposition the occupant or child restraint in a rear seat.

If the front passenger air bag status light will not illuminate even though you believe that the child restraint, the seat belts and the occupant are properly positioned, the system may be sensing an unoccupied seat (in which case the air bag is OFF). An INFINITI retailer can check that the system is OFF by using a special tool. However, until you have confirmed with a retailer that your air bag is working properly, reposition the occupant or child restraint in a rear seat.

The INFINITI Advanced Air Bag System and front passenger air bag status light will take a few seconds to register a change in the front passenger seat status. For example, if a large adult who is sitting in the front passenger seat exits the vehicle, the front passenger air bag status light will go from OFF to ON for a few seconds and then to OFF. This is normal system operation and does not indicate a malfunction.

If a malfunction occurs in the front passenger air bag system, the supplemental air bag warning light , located in the meter and gauges area of the instrument panel, will blink. Have the system checked. It is recommended that you visit an INFINITI retailer for this service.

Normal operation

In order for the occupant classification sensor system to classify the front passenger based on weight, please follow the precautions and steps outlined below:

Precautions

- Make sure that there are no objects weighing over 2.2 lbs (1 kg) hanging on the seat or placed in the seatback pocket.
- Make sure that a child restraint or other object is not pressing against the rear of the seatback.
- Make sure that a rear passenger is not pushing or pulling on the back of the front passenger seat.
- Make sure that the front passenger seat or seatback is not forced back against an object on the seat or floor behind it.
- Make sure that there is no object placed under the front passenger seat.

Steps

1. Adjust the seat as outlined in the “Seats” section of this manual. Sit upright, leaning against the seatback, and centered on the seat cushion with your feet comfortably extended to the floor.
2. Make sure there are no objects on your lap.
3. Fasten the seat belt as outlined in the “Seat belts” section of this manual.
4. Remain in this position for 30 seconds allowing the system to classify the front passenger before the vehicle is put into motion.
5. Ensure proper classification by checking the front passenger air bag status light.

NOTE:

This vehicle’s occupant classification sensor system locks the classification during driving so it is important that you confirm that the front passenger is properly classified prior to driving. Also, the occupant classification sensor system may recalculate the weight of the occupant when the vehicle comes to a stop (i.e. stop light, stop sign, etc.), so front passenger seat occupants should continue to remain seated as outlined above.

Troubleshooting

If you think the front passenger air bag status light is incorrect:

1. If the light is ON with no front passenger and no objects on the front passenger seat:

This may be due to the following conditions that may be interfering with the weight sensors:

- An object weighing over 2.2 lbs (1 kg) hanging on the seat or placed in the seatback pocket.
- A child restraint or other object pressing against the rear of the seatback.
- A rear passenger pushing or pulling on the back of the front passenger seat.
- Forcing the front seat or seatback against an object on the seat or floor behind it.
- An object placed under the front passenger seat.
- An object placed between the seat cushion and center console or between the seat cushion and the door.

If the vehicle is moving, please come to a stop when it is safe to do so. Check and correct any of the above conditions. Restart the vehicle and wait 1 minute.

NOTE:

A system check will be performed during which the front passenger air bag status light will remain lit for about 7 seconds initially.

If the light is still ON after this, the vehicle should be checked as soon as possible. It is recommended that you visit an INFINITI retailer for this service.

2. If the light is ON with an adult occupying the front passenger seat:

- Occupant is a small adult — the air bag light is functioning as intended. The front passenger air bag is suppressed.

However, if the occupant is not a small adult, then this may be due to the following conditions that may be interfering with the weight sensors:

- Occupant is not sitting upright, leaning against the seatback, and centered on the seat cushion with his/her feet comfortably extended to the floor.
- A child restraint or other object pressing against the rear of the seatback.
- A rear passenger pushing or pulling on the back of the front passenger seat.

- Forcing the front seat or seatback against an object on the seat or floor behind it.
- An object placed under the front passenger seat.
- An object placed between the seat cushion and center console or between the seat cushion and the door.

If the vehicle is moving, please come to a stop when it is safe to do so. Check and correct any of the above conditions. Restart the vehicle and wait 1 minute.

NOTE:

A system check will be performed during which the front passenger air bag status light will remain lit for about 7 seconds initially.

If the light is still ON after this, the person should be advised not to ride in the front passenger seat and the vehicle should be checked as soon as possible. It is recommended that you visit an INFINITI retailer for this service.

3. If the light is OFF with a small adult, child or child restraint occupying the front passenger seat.

   This may be due to the following conditions that may be interfering with the weight sensors:

- Small adult or child is not sitting upright, leaning against the seatback, and centered on the seat cushion with his/her feet comfortably extended to the floor.
- The child restraint is not properly installed, as outlined in the "Child restraints" section of this manual.
- An object weighing over 2.2 lbs (1 kg) hanging on the seat or placed in the seatback pocket.
- A child restraint or other object pressing against the rear of the seatback.
- A rear passenger pushing or pulling on the back of the front passenger seat.
- Forcing the front seat or seatback against an object on the seat or floor behind it.
- An object placed under the front passenger seat.
- An object placed between the seat cushion and center console.

If the vehicle is moving, please come to a stop when it is safe to do so. Check and correct any of the above conditions. Restart the vehicle and wait 1 minute.

NOTE:

A system check will be performed during which the front passenger air bag status light will remain lit for about 7 seconds initially.

If the light is still OFF after this, the small adult, child or child restraint should be repositioned in the rear seat and the vehicle should be checked as soon as possible. It is recommended that you visit an INFINITI retailer for this service.

Other supplemental front-impact air bag precautions

⚠ WARNING

- **Do not place any objects on the steering wheel pad or on the instrument panel. Also, do not place any objects between any occupant and the steering wheel or instrument panel. Such objects may become dangerous projectiles and cause injury if the front air bags inflate.**
- **Immediately after inflation, several front air bag system components will be hot. Do not touch them; you may severely burn yourself.**
- **No unauthorized changes should be made to any components or wiring of the supplemental air bag system. This is to prevent accidental inflation of the supplemental air bag or damage to the supplemental air bag system.**
- **Do not make unauthorized changes to your vehicle's electrical system, suspension system or front end structure. This could affect proper operation of the front air bag system.**
- **Tampering with the front air bag system may result in serious personal injury. Tampering includes changes to the steering wheel and the instrument panel assembly by placing material over the steering wheel pad and above the instrument panel or by installing additional trim material around the air bag system.**
- **Removing or modifying the front passenger seat may affect the function of the air bag system and result in serious personal injury.**
- **Modifying or tampering with the front passenger seat may result in serious personal injury. For example, do not change the front seats by placing material on the seat cushion or by installing additional trim material, such as seat covers, on the seat that are not specifically designed to assure proper air bag operation. Additionally, do not stow any objects under the front passenger seat or the seat cushion and seatback. Such objects may interfere with the proper operation of the occupant classification sensor (weight sensor).**
- **No unauthorized changes should be made to any components or wiring of the seat belt system. This may affect the front air bag system. Tampering with the seat belt system may result in serious personal injury.**
- **It is recommended that you visit an INFINITI retailer for work on and around the front air bag. It is also recommended that you visit an INFINITI retailer for installation of electrical equipment. The Supplemental Restraint System (SRS) wiring harnesses* should not be modified or disconnected. Unauthorized electrical test equipment and probing devices should not be used on the air bag system.**
- **A cracked windshield should be replaced immediately by a qualified repair facility. A cracked windshield could affect the function of the supplemental air bag system.**

***The SRS wiring harness connectors are yellow and orange for easy identification.**

When selling your vehicle, we request that you inform the buyer about the front air bag system and guide the buyer to the appropriate sections in this Owner's Manual.

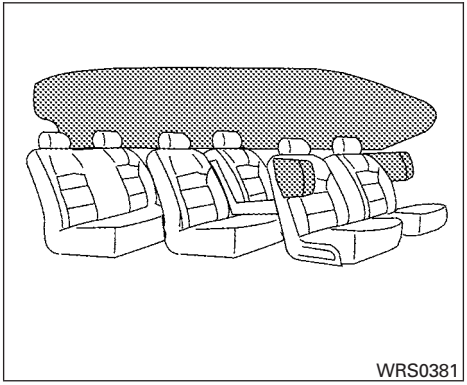

Front seat-mounted side-impact supplemental air bag and roof-mounted curtain side-impact and rollover supplemental air bag systems

The side air bags are located in the outside of the seatback of the front seats. The curtain air bags are located in the side roof rails in all three rows. **All of the information, cautions and warnings in this manual apply and must be followed.** The side air bags and curtain air bags are designed to inflate in higher severity side collisions, although they may inflate if the forces in another type of collision are similar to those of a higher severity impact. They are designed to inflate on the side where the vehicle is impacted. They may not inflate in certain side collisions.

Curtain air bags are also designed to inflate in certain types of rollover collisions or near rollovers. As a result, certain vehicle movements (for example, during severe off-roading) may cause the curtain air bags to inflate.

Vehicle damage (or lack of it) is not always an indication of proper side air bag and curtain air bag operation.

When the side air bags and curtain air bags inflate, a fairly loud noise may be heard, followed by release of smoke. This smoke is not harmful and does not indicate a fire. Care should be taken not to inhale it, as it may cause irritation and choking. Those with a history of a breathing condition should get fresh air promptly.

Side air bags, along with the use of seat belts, help to cushion the impact force on the chest of the front occupants. Curtain air bags help to cushion the impact force to the head of occupants in the front and rear outboard seating positions in all rows. They can help save lives and reduce serious injuries. However, an inflating side air bag or curtain air bag may cause abrasions or other injuries. Side air bags and curtain air bags do not provide restraint to the lower body.

The seat belts should be correctly worn and the driver and front passenger seated upright as far as practical away from the side air bag. Rear seat passengers should be seated as far away as practical from the door finishers and side roof rails. The side air bags and curtain air bags inflate quickly in order to help protect the occupants. Because of this, the force of the side air bags and curtain air bags inflating can increase the risk of injury if the occupant is too close to, or is against, these air bag modules during inflation. The side air bag will deflate quickly after the collision is over.

The curtain air bag will remain inflated for a short time.

The side air bags and curtain air bags operate only when the ignition switch is placed in the ON position.

After placing the ignition switch in the ON position, the supplemental air bag warning light illuminates. The supplemental air bag warning light will turn off after about 7 seconds if the system is operational.

⚠ WARNING

- **Do not place any objects near the seatback of the front seats. Also, do not place any objects (an umbrella, bag, etc.) between the front door finisher and the front seat. Such objects may become dangerous projectiles and cause injury if a side air bag inflates.**
- **Right after inflation, several side air bag and curtain air bag system components will be hot. Do not touch them; you may severely burn yourself.**
- **No unauthorized changes should be made to any components or wiring of the side air bag and curtain air bag systems. This is to prevent damage to or accidental inflation of the side air bag and curtain air bag systems.**
- **Do not make unauthorized changes to your vehicle's electrical system, suspension system or side panel. This could affect proper operation of the curtain air bag systems.**
- **Tampering with the side air bag system may result in serious personal injury. For example, do not change the front seats by placing material near the seatbacks or by installing additional trim material, such as seat covers, around the side air bag.**
- **It is recommended that you visit an INFINITI retailer for work on and around the front air bag. It is also recommended that you visit an INFINITI retailer for installation of electrical equipment. The SRS wiring harnesses* should not be modified or disconnected. Unauthorized electrical test equipment and probing devices should not be used on the side air bag or curtain air bag systems.**

***The SRS wiring harness or connectors are yellow or orange for easy identification.**

When selling your vehicle, we request that you inform the buyer about the side air bags and curtain air bag system and guide the buyer to the appropriate sections in this Owner's Manual.

Seat belt with pretensioner(s) (front seats)

⚠ WARNING

- **The pretensioner(s) cannot be reused after activation. They must be replaced together with the retractor and buckle as a unit.**
- **If the vehicle becomes involved in a collision but pretensioner(s) are not activated, be sure to have the pretensioner system checked and, if necessary, replaced. It is recommended that you visit an INFINITI retailer for this service.**
- **No unauthorized changes should be made to any components or wiring of the pretensioner system. This is to prevent damage to or accidental activation of the pretensioner(s). Tampering with the pretensioner system may result in serious personal injury.**

- **It is recommended that you visit an INFINITI retailer for work on and around the pretensioner system. It is also recommended that you visit an INFINITI retailer for installation of electrical equipment. Unauthorized electrical test equipment and probing devices should not be used on the pretensioner system.**
- **If you need to dispose of the pretensioner(s) or scrap the vehicle, it is recommended that you visit an INFINITI retailer for this service. Incorrect disposal procedures could cause personal injury.**

The pretensioner system may activate with the supplemental air bag system in certain types of collisions. Working with the seat belt retractor, the pretensioner(s) help tighten the seat belt when the vehicle becomes involved in certain types of collisions, helping to restrain front seat occupants.

The pretensioner(s) are encased within the seat belt retractor and to the seat belt anchor affixed to the floor of the vehicle. These seat belts are used the same way as conventional seat belts.

When pretensioner(s) activate, smoke is released and a loud noise may be heard. This smoke is not harmful and does not indicate a fire. Care should be taken not to inhale it, as it may cause irritation and choking. Those with a history of a breathing condition should get fresh air promptly.

After the pretensioner(s') activation, load limiters allow the seat belt to release webbing (if necessary) to reduce forces against the chest.

The supplemental air bag warning light is used to indicate malfunctions in the pretensioner system. For additional information, refer to "Supplemental air bag warning light" in this section. If the operation of the supplemental air bag warning light indicates there is a malfunction, have the system checked. It is recommended that you visit an INFINITI retailer for this service.

When selling your vehicle, we request that you inform the buyer about the pretensioner system and guide the buyer to the appropriate sections in this Owner's Manual.

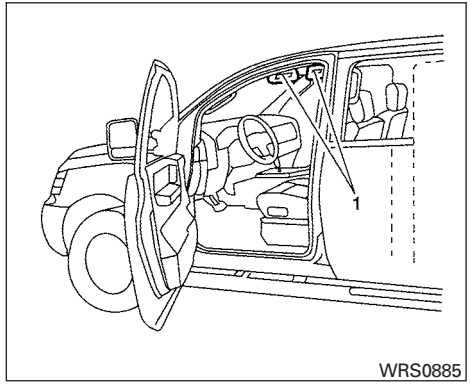

1. SRS Air bag warning labels

   The warning labels are located on the surface of the sun visor.

SUPPLEMENTAL AIR BAG WARNING LABELS

Warning labels about the supplemental front-impact air bag system are placed in the vehicle as shown in the illustration.

⚠ WARNING

Do not use a rear-facing child restraint on a seat protected by an air bag in front of it. If the air bag deploys, it may cause serious injury or death.

LRS0100

SUPPLEMENTAL AIR BAG WARNING LIGHT

The supplemental air bag warning light, displaying in the instrument panel, monitors the circuits for the air bag systems, pretensioner(s) and all related wiring.

When the ignition switch is placed in the ON position, the supplemental air bag warning light illuminates for about 7 seconds and then turns OFF. This means the system is operational.

If any of the following conditions occur, the front air bag, side air bag, curtain air bag and pretensioner systems need servicing:

- The supplemental air bag warning light remains on after approximately 7 seconds.
- The supplemental air bag warning light flashes intermittently.
- The supplemental air bag warning light does not come on at all.

Under these conditions, the front air bag, side air bag, curtain air bag or pretensioner systems may not operate properly. They must be checked and repaired. It is recommended that you visit an INFINITI retailer for this service.

⚠ WARNING

If the supplemental air bag warning light is on, it could mean that the front air bag, side air bag, curtain air bag and/or pretensioner systems will not operate in an accident. To help avoid injury to yourself or others, have your vehicle checked as soon as possible. It is recommended that you visit an INFINITI retailer for this service.

Repair and replacement procedure

The front air bags, side air bags, curtain air bags and pretensioner(s) are designed to inflate on a one-time-only basis. As a reminder, unless it is damaged, the supplemental air bag warning light remains illuminated after inflation has occurred. These systems should be repaired and/or replaced as soon as possible. It is recommended that you visit an INFINITI retailer for this service.

When maintenance work is required on the vehicle, the front air bags, side air bags, curtain air bags, pretensioner(s) and related parts should be pointed out to the person performing the maintenance. The ignition switch should always be in the LOCK position when working under the hood or inside the vehicle.

⚠ WARNING

- **Once a front air bag, side air bag, or curtain air bag has inflated, the air bag module will not function again and must be replaced. Additionally, the activated pretensioner(s) must also be replaced. The air bag module and pretensioner(s) should be replaced. It is recommended that you visit an INFINITI retailer for this service. However, the air bag module and pretensioner(s) cannot be repaired.**
- **The front air bag, side air bag, curtain air bag systems and the pretensioner system should be inspected if there is any damage to the front end or side portion of the vehicle. It is recommended that you visit an INFINITI retailer for this service.**
- **If you need to dispose of a supplemental air bag or pretensioner systems or scrap the vehicle, it is recommended you visit an INFINITI retailer. Incorrect disposal procedures could cause personal injury.**
- **If there is an impact to your vehicle from any direction, your Occupant Classification Sensor (OCS) should be checked to verify it is still functioning correctly. It is recommended that you visit an INFINITI retailer for this service. The OCS should be checked even if no air bags deploy as a result of the impact. Failure to verify proper OCS function may result in an improper air bag deployment resulting in injury or death. ice. The OCS should be checked even if no air bags deploy as a result of the impact. Failure to verify proper OCS function may result in an improper air bag deployment resulting in injury or death.**

MEMO

2 Instruments and controls

Instrument panel 2-2
Meters and gauges 2-4
Speedometer and odometer 2-4
Tachometer 2-6
Engine coolant temperature gauge 2-6
Fuel gauge 2-7
Warning lights, indicator lights and audible reminders 2-8
Checking lights 2-8
Warning lights 2-9
Indicator lights 2-13
Audible reminders 2-15
Vehicle Information Display 2-16
How to use the vehicle information display 2-16
Startup display 2-17
Settings 2-17
Vehicle information display warnings and indicators 2-25
Security systems 2-30
Vehicle security system 2-30
INFINITI vehicle immobilizer system 2-31
Wiper and washer switch 2-32
Switch operation 2-32
Rain-sensing auto wiper system (if so equipped) 2-34
Rear switch operation 2-35
Rear window and outside mirror defroster switch 2-36
Headlight and turn signal switch 2-36
Xenon headlights 2-36
Headlight control switch 2-37
Daytime running light system 2-39
Instrument brightness control 2-40
Turn signal switch 2-40
Fog light switch 2-41
Horn 2-41
Heated seat switches (if so equipped) 2-42
Heated 2nd row seat switches (if so equipped) 2-43
Climate controlled seat switches (if so equipped) 2-44
Heated steering wheel switch (if so equipped) 2-45
Front and rear sonar system off switch (if so equipped) 2-45
Warning systems switch (if so equipped) 2-46
Vehicle Dynamic Control (VDC) off switch 2-47
Power inverter switch (if so equipped) 2-47
Power outlets 2-48
12v outlets 2-48

120v outlet (if so equipped) 2-49
E-call (SOS) switch (if so equipped). 2-50
Extended storage switch 2-50
Storage 2-51
Map pockets. 2-51
Seatback pockets 2-51
Glove box 2-52
Console box 2-52
Storage trays 2-53
Sunglasses holder. 2-54
Cup holders 2-54
Luggage hooks. 2-56
Cargo area storage bin. 2-57
Roof rack (if so equipped) 2-57
Windows 2-58
Power windows 2-58
Moonroof. 2-61
Power moonroof. 2-61
Dual panel moonroof (if so equipped) 2-62
Power moonroof. 2-62
Interior lights 2-65
Console light (if so equipped). 2-65
Map lights 2-66
Personal Lights. 2-66
Luggage compartment light. 2-66
Homelink® universal transceiver (if so equipped). 2-67
Programming HomeLink® 2-67
Programming HomeLink® for Canadian customers and gate openers. 2-69
Operating the HomeLink® universal transceiver. 2-69
Programming trouble-diagnosis 2-69
Clearing the programmed information 2-70
Reprogramming a single HomeLink® button. 2-70
If your vehicle is stolen 2-70

INSTRUMENT PANEL

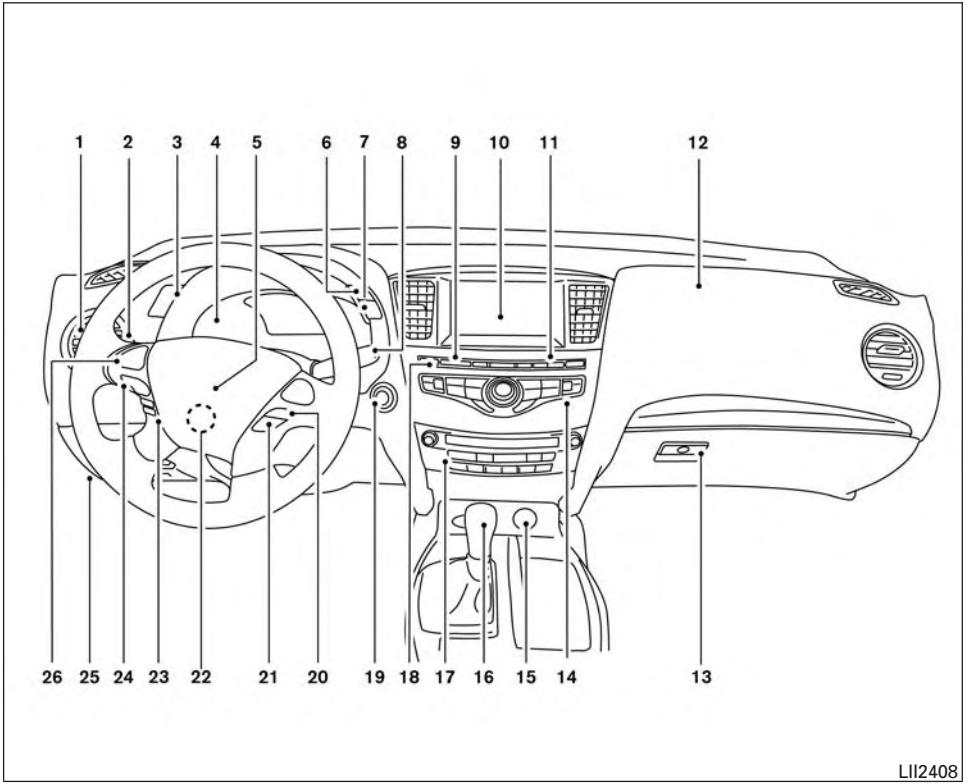

1. Vent (P. 4-47)
2. Headlight/fog light/turn signal switch (P. 2-40)
3. Instrument brightness control (P. 2-36)
4. Meters and gauges (P. 2-4)
   Warning and indicator lights (P. 2-8)
   Vehicle information display (P. 2-16)
5. Driver supplemental air bag (P.1-49)
   Horn (P. 2-41)
6. Back-up Collision Intervention (BCI) system switch (if so equipped) (P. 5-58)
7. Trip reset switch (P. 2-4)
8. Wiper and washer switch (P. 2-32)
   Rear wiper and washer switch (P. 2-32)
9. Rear window and outside mirror defroster switch (P. 2-36)
10. Center display (P. 4-4)
    Navigation system* (if so equipped) (P. 4-11)
11. Automatic heater and air conditioning controls (P. 4-48)
12. Front passenger supplemental air bag (P. 1-56)
13. Glove box (P. 2-52)

14. Center multi-function control buttons (P. 4-5, 4-12)
15. Power outlet (P. 2-48)
16. Shift lever (P. 5-18)
17. Audio system controls (P. 4-56)
    Front passenger air bag status light (P. 2-13)
18. Hazard warning flasher switch (P. 6-2)
19. Push-button ignition switch (P. 5-13)
20. Cruise control main/set switches (if so equipped) (P. 5-74)
    Intelligent Cruise Control (ICC) switches (if so equipped) (P. 5-76)
21. Dynamic Driver Assistance switch (if so equipped) (P. 5-95)
22. Tilt steering wheel control (P. 3-29)
23. Bluetooth® Hands-Free Phone System (P. 4-113, 4-127)
24. Steering wheel switch for audio control (P. 4-99)
25. Hood release (P. 3-21)
    Vehicle Dynamic Control (VDC) OFF switch (P. 2-47)
    Heated steering wheel switch (if so equipped) (P. 2-45)
    Headlight aiming control (P. 2-36)
    Warning Systems switch (if so equipped) (P. 2-46)
    Power inverter switch (if so equipped) (P. 2-47)
    Liftgate release switch (P. 3-22)
    Power liftgate main switch (P. 3-22)
    Front and rear sonar system switch (if so equipped) (P. 5-140)
26. Control panel and Vehicle information display switches (P. 4-14, 2-16)

*: Refer to the separate Navigation System Owner's Manual (if so equipped).

Refer to the page number indicated in parentheses for operating details.

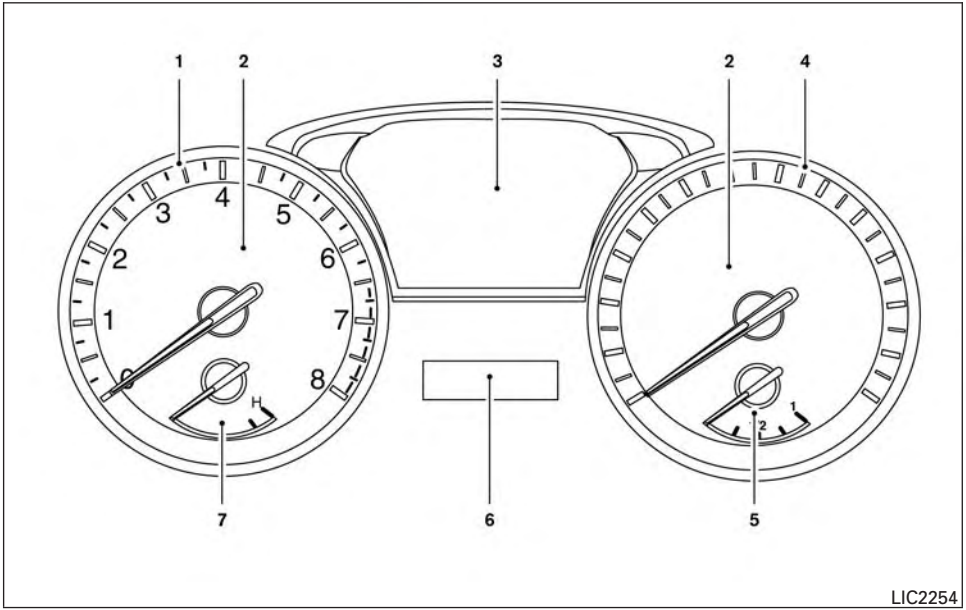

1. Tachometer
2. Warning and indicator lights
3. Vehicle information display
4. Speedometer
5. Fuel gauge
6. Odometer
   Twin trip odometer
7. Engine coolant temperature gauge

SPEEDOMETER AND ODOMETER

This vehicle is equipped with a speedometer and odometer. The speedometer is located on the right side of the meter cluster. The odometer is located below the vehicle information display.

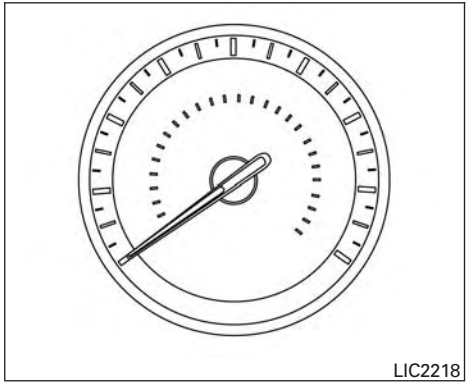

Speedometer

The speedometer indicates vehicle speed.

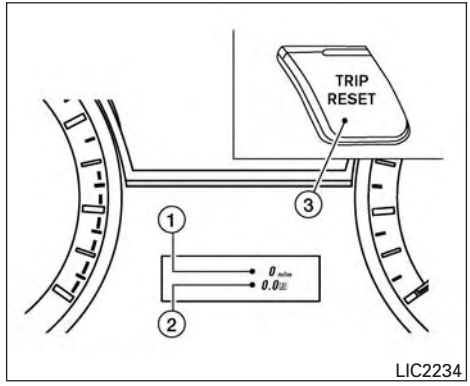

Odometer/Twin trip odometer

The odometer ① and the twin trip odometer ② are displayed below the Vehicle Information Display when the ignition switch is placed in the ON position.

The odometer records the total distance the vehicle has been driven.

The twin trip odometer records the distance of individual trips.

Changing the display

Push the TRIP RESET ③ switch on the right of the combination meter to change the display as follows:

Trip A → Trip B → Trip A

Resetting the trip odometer

Pushing the TRIP RESET switch ③ for more than 1 second resets the currently displayed trip odometer to zero.

Average fuel economy and distance to empty information is also available. For additional information, refer to “Vehicle information display” in this section.

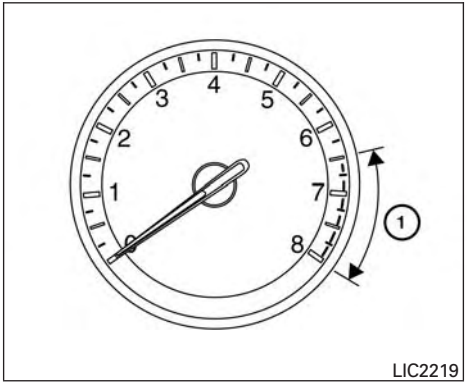

LIC2219

TACHOMETER

The tachometer indicates engine speed in revolutions per minute (RPM). Do not rev the engine into the red zone ①.

⚠ CAUTION

When engine speed approaches the red zone, shift to a higher gear or reduce engine speed. Operating the engine in the red zone may cause serious engine damage.

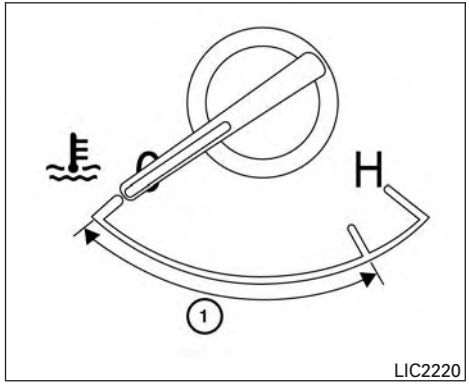

LIC2220

ENGINE COOLANT TEMPERATURE GAUGE

The gauge indicates the engine coolant temperature. The engine coolant temperature is within the normal range ① when the gauge needle points within the zone shown in the illustration.

The engine coolant temperature varies with the outside air temperature and driving conditions.

⚠ CAUTION

If the gauge indicates coolant temperature near the hot (H) end of the normal range, reduce vehicle speed to decrease temperature. If the gauge is over the normal range, stop the vehicle as soon as safely possible. If the engine is overheated, continued operation of the vehicle may seriously damage the engine. For additional information, refer to "If your vehicle overheats" in the "In case of emergency" section of this manual for immediate action required.

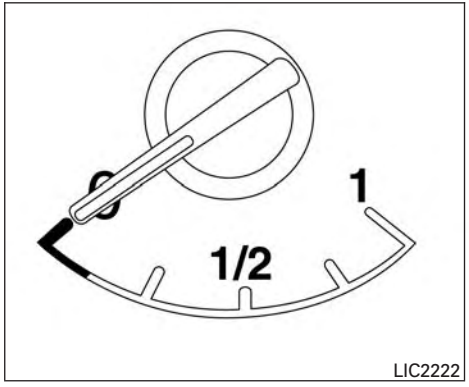

FUEL GAUGE

The gauge indicates the **approximate** fuel level in the tank.

The gauge may move slightly during braking, turning, acceleration, or going up or down hills.

The gauge needle returns to 0 (Empty) after the ignition switch is placed in the OFF position.

The low fuel warning light comes on when the amount of fuel in the tank is getting low.

Refill the fuel tank before the gauge registers 0 (Empty).

The ◀⛽ indicates that the fuel-filler door is located on the driver's side of the vehicle.

⚠ CAUTION

- **If the vehicle runs out of fuel, the Malfunction Indicator Light (MIL) may come on. Refuel as soon as possible. After a few driving trips. the light should turn off. If the light remains on after a few driving trips, have the vehicle inspected. It is recommended that you visit an INFINITI retailer for this service.**
- **For additional information, refer to "Malfunction Indicator Light (MIL)" in this section.**

ABS or (ABS) Anti-lock Braking System (ABS) warning light	Seat belt warning light and chime	Security indicator light
BRAKE or (!) Brake warning light	Supplemental air bag warning light	Side light and headlight indicator light (green)
Charge warning light	Continuously Variable Transmission (CVT) position indicator light	Slip indicator light
Forward Emergency Braking (FEB) system warning light (if so equipped)	Front fog light indicator light (green)	Turn signal/hazard indicator lights
Low tire pressure warning light	Front passenger air bag status light	Vehicle Dynamic Control (VDC) OFF indicator light
Master warning light	High beam indicator light (blue)	
PS Power steering warning light	Malfunction Indicator Light (MIL)	

CHECKING LIGHTS

With all doors closed, apply the parking brake, fasten the seat belts and place the ignition switch in the ON position without starting the engine. The following lights (if so equipped) will come on:

, BRAKE or (!) ,

The following lights (if so equipped) come on briefly and then go off:

ABS or (ABS) , , , , PS

If any light fails to come on or operate in a way other than described, it may indicate a burned-out bulb and/or a system malfunction. Have the system checked. It is recommended you visit an INFINITI retailer for this service.

Some indicators and warnings are also displayed in the vehicle information display between the speedometer and tachometer. For additional information, refer to “Vehicle information display” in this section.

WARNING LIGHTS

For additional information, refer to “Vehicle information display” in this section.

ABS or Anti-lock Braking System (ABS) warning light

When the ignition switch is placed in the ON position, the ABS warning light illuminates and then turns off. This indicates the ABS is operational.

If the ABS light comes on while the engine is running, it may indicate the anti-lock braking system is not functioning properly. Have the system checked. It is recommended that you visit an INFINITI retailer for this service.

If an ABS malfunction occurs, the anti-lock function is turned off. The brake system then operates normally, but without anti-lock assistance. For additional information, refer to “Brake system” in the “Starting and driving” section of this manual.

BRAKE or Brake warning light

This light functions for both the parking brake and the foot brake systems.

Parking brake indicator

When the ignition switch is placed in the ON position, the light comes on when the parking brake is applied.

Low brake fluid warning light

When the ignition switch is placed in the ON position, the light warns of a low brake fluid level. If the light comes on while the engine is running with the parking brake not applied, stop the vehicle and perform the following:

1. Check the brake fluid level. Add brake fluid as necessary. For additional information, refer to “Brake fluid” in the “Maintenance and do-it-yourself” section of this manual.
2. If the brake fluid level is correct, have the system checked. It is recommended that you visit an INFINITI retailer for this service.

WARNING

- **Your brake system may not be working properly if the warning light is on. Driving could be dangerous. If you judge it to be safe, drive carefully to the nearest service station for repairs. Otherwise, have your vehicle towed because driving it could be dangerous.**
- **Pressing the brake pedal with the engine stopped and/or a low brake fluid level may increase your stopping distance and braking will require greater pedal effort as well as pedal travel.**
- **If the brake fluid level is below the MINIMUM or MIN mark on the brake fluid reservoir, do not drive until the brake system has been checked. It is recommended that you visit an INFINITI retailer for this service.**

Anti-lock Braking System (ABS) warning indicator

When the parking brake is released and the brake fluid level is sufficient, if both the brake warning light and the ABS warning light illuminate, it may indicate the ABS is not functioning properly. Have the brake system checked, and if necessary, repaired. It is recommended that you visit an INFINITI retailer for this service. Avoid high-speed driving and abrupt braking. For additional information, refer to “Anti-lock Braking System (ABS) warning light” in this section.

Charge warning light

If this light comes on while the engine is running, it may indicate the charging system is not functioning properly. Turn the engine off and check

the generator belt. If the belt is loose, broken, missing, or if the light remains on, have your vehicle serviced immediately. It is recommended that you visit an INFINITI retailer for this service.

⚠ CAUTION

- **Do not continue driving if the generator belt is loose, broken or missing.**

Forward Emergency Braking (FEB) system warning light (if so equipped)

This light illuminates when the Forward Emergency Braking system is set to OFF on the meter display.
If the light illuminates when the Forward Emergency Braking system is ON, it may indicate that the system is unavailable. For additional information, refer to “Forward Emergency Braking (FEB)” in the “Starting and driving” section of this manual.

Low tire pressure warning light

Your vehicle is equipped with a TPMS that monitors the tire pressure of all tires except the spare.

The low tire pressure warning light warns of low tire pressure or indicates that the TPMS is not functioning properly.

After the ignition switch is placed in the ON position, this light illuminates for about 1 second and turns off.

Low tire pressure warning

If the vehicle is being driven with low tire pressure, the warning light will illuminate. A “Tire Press Low - Add Air” warning also appears in the vehicle information display.

When the low tire pressure warning light illuminates, you should stop and adjust the tire pressure of all four tires to the recommended COLD tire pressure shown on the Tire and Loading Information label located in the driver’s door opening. The low tire pressure warning light does not automatically turn off when the tire pressure is adjusted. After the tire is inflated to the recommended pressure, the vehicle must be driven at speeds above 16 mph (25 km/h) to activate the TPMS and turn off the low tire pressure warning light. Use a tire pressure gauge to check the tire pressure.

The “Tire Press Low - Add Air” warning appears each time the ignition switch is placed in the ON position as long as the low tire pressure warning light remains illuminated.

For additional information, refer to “Vehicle information display” in the “Instruments and controls” section and “Tire Pressure Monitoring System (TPMS)” in the “Starting and driving” section and in the “In case of emergency” section of this manual.

TPMS malfunction

If the TPMS is not functioning properly, the low tire pressure warning light will flash for approximately 1 minute when the ignition switch is placed in the ON position. The light will remain on after the 1 minute. Have the system checked. It is recommended that you visit an INFINITI retailer for this service. The “Tire Pressure Low - Add Air” warning does not appear if the low tire pressure warning light illuminates to indicate a TPMS malfunction.

For additional information, refer to “Tire Pressure Monitoring System (TPMS)” in the “Starting and driving” section and “Tire pressure” in the “Maintenance and do-it-yourself” section of this manual.

⚠ WARNING

- **Radio waves could adversely affect electric medical equipment. Those who use a pacemaker should contact the electric medical equipment manufacturer for the possible influences before use.**

- **If the light does not illuminate with the ignition switch placed in the ON position, have the vehicle checked. It is recommended that you visit an INFINITI retailer for this service.**
- **If the light illuminates while driving, avoid sudden steering maneuvers or abrupt braking, reduce vehicle speed, pull off the road to a safe location and stop the vehicle as soon as possible. Driving with under-inflated tires may permanently damage the tires and increase the likelihood of tire failure. Serious vehicle damage could occur and may lead to an accident and could result in serious personal injury or death. Check the tire pressure for all four tires. Adjust the tire pressure to the recommended COLD tire pressure shown on the tire placard label located in the driver's door opening to turn the low tire pressure warning light OFF. If the light still illuminates while driving after adjusting the tire pressure, a tire may be flat. If you have a flat tire, replace it with a spare tire as soon as possible.**
- **Since the spare tire is not equipped with the TPMS, when a spare tire is mounted or a wheel is replaced tire pressure will not be indicated, the TPMS will not function and the low tire pressure warning light will flash for approximately 1 minute. The light will remain on after 1 minute. Have your tires replaced and/or TPMS system reset as soon as possible. It is recommended that you visit an INFINITI retailer for these services.**
- **Replacing tires with those not originally specified by INFINITI could affect the proper operation of the TPMS.**

⚠ CAUTION

- **The TPMS is not a substitute for the regular tire pressure check. Be sure to check the tire pressure regularly.**
- **If the vehicle is being driven at speeds of less than 16 mph (25 km/h), the TPMS may not operate correctly.**
- **Be sure to install the specified size of tires to the four wheels correctly.**

Master warning light

When the ignition switch is in the ON position, the master warning light illuminates if any of the following are displayed on the vehicle information display:

- No key warning
- Low fuel warning
- Low washer fluid warning
- Parking brake release warning
- Door open warning
- Loose fuel cap warning
- Check tire pressure warning

For additional information, refer to "Vehicle information display" in this section.

PS Power steering warning light

⚠ WARNING

- **If the engine is not running or is turned off while driving, the power assist for the steering will not work. Steering will be harder to operate.**

- **When the power steering warning light illuminates with the engine running, there will be no power assist for the steering. You will still have control of the vehicle but the steering will be harder to operate. Have the power steering system checked. It is recommended that you visit an INFINITI retailer for this service.**

When the ignition switch is placed in the ON position, the power steering warning light illuminates. After starting the engine, the power steering warning light turns off. This indicates that the electric power steering system is operational.

If the power steering warning light illuminates while the engine is running, it may indicate the power steering system is not functioning properly and may need servicing. Have the hydraulic pump electric power steering system checked. It is recommended that you visit an INFINITI retailer for this service.

When the power steering warning light illuminates with the engine running, there will be no power assist for the steering but you will still have control of the vehicle. At this time, greater steering effort is required to operate the steering wheel, especially in sharp turns and at low speeds.

For additional information, refer to “Power steering” in the “Starting and driving” section of this manual.

Seat belt warning light and chime

The light and chime remind you to fasten your seat belts. The light illuminates whenever the ignition switch is placed in the ON or START position and remains illuminated until the driver’s seat belt is fastened. At the same time, the chime sounds for about 6 seconds unless the driver’s seat belt is securely fastened.

The seat belt warning light may also illuminate if the front passenger’s seat belt is not fastened when the front passenger’s seat is occupied . For 7 seconds after the ignition switch is placed in the ON position, the system does not activate the warning light for the front passenger.

For additional information, refer to “Seat belts” in the “Safety—Seats, seat belts and supplemental restraint system” section of this manual.

Supplemental air bag warning light

When the ignition switch is placed in the ON position, the supplemental air bag warning light illuminates for about 7 seconds and then turns off. This means the system is operational.

If any of the following conditions occur, the front air bag, front seat-mounted side-impact air bag, roof-mounted curtain air bag and pretensioner systems need servicing:

- The supplemental air bag warning light remains on after approximately 7 seconds.
- The supplemental air bag warning light flashes intermittently.
- The supplemental air bag warning light does not come on at all.

It is recommended you visit an INFINITI retailer for these services. Unless checked and repaired, the supplemental restraint system (air bag system) and/or the pretensioner systems may not function properly. For additional information, refer to “Supplemental Restraint System (SRS)” in the “Safety—Seats, seat belts and supplemental restraint system” section of this manual.

⚠WARNING

If the supplemental air bag warning light is on, it could mean that the front air bag, side air bag, curtain air bag systems and/or pretensioner systems will not operate in an accident. To help avoid injury to yourself or others, have your vehicle checked. It is recommended you visit an INFINITI retailer for this service.

INDICATOR LIGHTS

For additional information, refer to “Vehicle information display” in this section.

Continuously Variable Transmission (CVT) position indicator light

When the ignition switch is placed in the ON position, this indicator light shows the shift lever position. For additional information, refer to “Driving the vehicle” in the “Starting and driving” section of this manual.

Front fog light indicator light (green)

The front fog light indicator light illuminates when the front fog lights are ON. For additional information, refer to “Fog light switch” in this section.

Front passenger air bag status light

The front passenger air bag status light will be lit and the passenger front air bag will be OFF depending on how the front passenger seat is being used.

For additional information, refer to “Front passenger air bag and status light” in the “Safety — Seats, seat belts and supplemental restraint system” section of this manual.

High beam indicator light (blue)

This blue light comes on when the headlight high beams are on and goes out when the low beams are selected.

The high beam indicator light also comes on when the passing signal is activated.

Malfunction Indicator Light (MIL)

If this indicator light comes on steady or blinks while the engine is running, it may indicate a potential emission control malfunction.

The MIL may also come on steady if the fuel-filler cap is loose or missing, or if the vehicle runs out of fuel. Check to make sure the fuel-filler cap is installed and closed tightly, and that the vehicle has at least 3 gal (11.4 L) of fuel in the fuel tank.

After a few driving trips, the light should turn off if no other potential emission control system malfunction exists.
If this indicator light comes on steady for 20 seconds and then blinks for 10 seconds when the engine is not running, it indicates that the vehicle is not ready for an emission control system inspection/maintenance test. For additional information, refer to “Readiness for inspection/maintenance (I/M) test” in the “Technical and consumer information” section of this manual.

Operation

The MIL will come on in one of two ways:

- MIL on steady — An emission control system malfunction has been detected. Check the fuel-filler cap if the LOOSE FUEL CAP warning appears in the vehicle information display. If the fuel-filler cap is loose or missing, tighten or install the cap and continue to drive the vehicle. The light should turn off after a few driving trips. If the light does not turn off after a few driving trips, have the vehicle inspected. It is recommended you visit an INFINITI retailer for this service. You do not need to have your vehicle towed to the retailer.
- MIL blinking — An engine misfire has been detected which may damage the emission control system. To reduce or avoid emission control system damage:
  - do not drive at speeds above 72 km (45 mph).
  - avoid hard acceleration or deceleration.

– avoid steep uphill grades.

– if possible, reduce the amount of cargo being hauled or towed.

The MIL may stop blinking and come on steady. Have the vehicle inspected. It is recommended you visit an INFINITI retailer for this service. You do not need to have your vehicle towed to the retailer.

CAUTION

Continued vehicle operation without having the emission control system checked and repaired as necessary could lead to poor driveability, reduced fuel economy, and possible damage to the emission control system.

Security indicator light

This light blinks whenever the ignition switch is in the LOCK, OFF or ACC position. This function indicates the security system equipped on the vehicle is operational.

For additional information, refer to “Security systems” in this section.

Side light and headlight indicator light (green)

The side light and headlight indicator light illuminates when the side light or headlight position is selected. For additional information, refer to “Headlight and turn signal switch” in this section.

Slip indicator light

This indicator will blink when the VDC system is operating, thus alerting the driver to the fact that the road surface is slippery and the vehicle is nearing its traction limits.

You may feel or hear the system working; this is normal.

The light will blink for a few seconds after the VDC system stops limiting wheel spin.

The indicator light also comes on when you place the ignition switch in the ON position. The light will turn off after approximately 2 seconds if the system is operational. If the light does not come on have the system checked. It is recommended that you visit an INFINITI retailer for this service.

Turn signal/hazard indicator lights

The appropriate light flashes when the turn signal switch is activated.

Both lights flash when the hazard switch is turned on.

Vehicle Dynamic Control (VDC) OFF indicator light

This indicator light comes on when the VDC off switch is pushed to OFF. This indicates the VDC has been turned off.

Push the VDC off switch again or restart the engine and the system will be reactivated. For additional information, refer to “Vehicle Dynamic Control (VDC) system” in the “Starting and driving” section of this manual.

The VDC light also comes on when the ignition switch is placed in the ON position. The light will turn off after about 2 seconds if the system is operational. If the light stays on or comes on along with the indicator light while you are driving, have the VDC system checked. It is recommended that you visit an INFINITI retailer for this service.

⚠ WARNING

VDC should remain on unless freeing a vehicle from mud or snow.

While the VDC system is operating, you might feel a slight vibration or hear the system working when starting the vehicle or accelerating, but this is normal.

AUDIBLE REMINDERS

Brake pad wear warning

The disc brake pads have audible wear warnings. When a disc brake pad requires replacement, it makes a high pitched scraping sound when the vehicle is in motion, whether or not the brake pedal is depressed. Have the brakes checked as soon as possible if the warning sound is heard.

Key reminder chime

A chime sounds if the driver's door is opened while the ignition switch is placed in the ACC or OFF position or placed in the OFF or LOCK position with the Intelligent Key left in the vehicle. Make sure the ignition switch is placed in the LOCK position, and take the Intelligent Key with you when leaving the vehicle.

Lane Departure Warning (LDW) and Lane Departure Prevention (LDP) warning chime (if so equipped)

When the LDW or LDP system is on, the chime sounds if the vehicle is traveling close to either the left or the right of a traveling lane with detectable lane markers.

For additional information, refer to "Lane Departure Warning (LDW) system (if so equipped)" or "Lane Departure Prevention (LDP) system (if so equipped)" in the "Starting and driving" section of this manual.

Light reminder chime

With the ignition switch placed in the OFF position, a chime sounds when the driver's door is opened if the headlights or parking lights are on.

Turn the headlight control switch off before leaving the vehicle.

Intelligent Key door buzzer

The Intelligent Key door buzzer sounds if any one of the following improper operations is found.

- The ignition switch is not returned to the LOCK position when locking the doors.
- The Intelligent Key is left inside the vehicle when locking the doors.
- The Intelligent Key is taken outside the vehicle when operating the vehicle.
- Any doors are not closed securely when locking the doors.

When the buzzer sounds, be sure to check both the vehicle and the Intelligent Key System. For additional information, refer to "INFINITI Intelligent Key" in the "Pre-driving checks and adjustments" section of this manual.

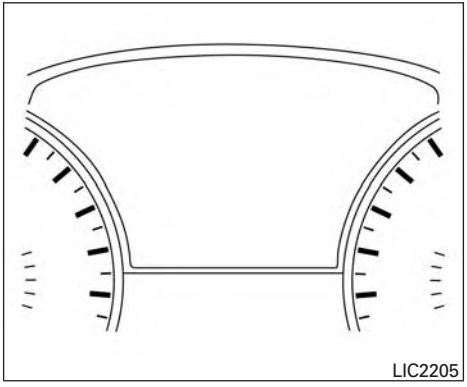
LIC2205

The vehicle information display is located to the left of the speedometer. It displays such items as:

- Vehicle settings
- Trip computer information
- Drive system warnings and settings (if so equipped)
- Cruise control system information (if so equipped)
- Intelligent Cruise Control (ICC) (if so equipped) system information
- Intelligent Key operation information
- Indicators and warnings
- Tire Pressure information
- Other information

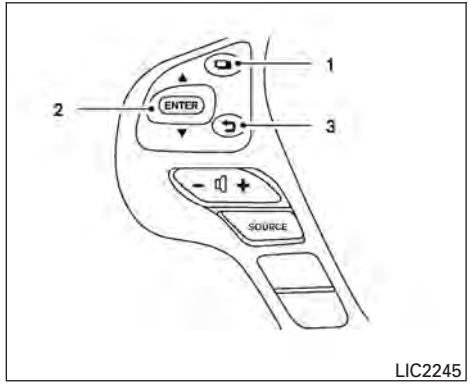

LIC2245

HOW TO USE THE VEHICLE INFORMATION DISPLAY

The vehicle information display can be changed using the ❑ , ▲▼ , ↩ and ENTER switches located on the steering wheel.

1. ❑ — select/enter the vehicle information menu items or to change from one display screen to the next (i.e. trip, TPMS, Fuel economy)
2. ▲▼ — navigate through the items in vehicle information
   ENTER — change or select an item in the vehicle information display

3. ⮌ — go back to the previous menu

The ENTER and ▲▼ switches also control audio and control panel functions. For additional information, refer to “Steering wheel switch for audio control” in the “Monitor, climate, audio, phone and voice recognition systems” section of this manual.

STARTUP DISPLAY

When the vehicle in placed in the ON or ACC position the screens that display in the vehicle information include:

- Active system status (if so equipped)
- Trip computer
- Tire pressure information
- Fuel economy
- Warnings

Warnings will only display if there are any present. For additional information refer to, “Vehicle information display warnings and indicators” section of this manual.

To control what items display in the vehicle information display, refer to “Main menu selection” section of this manual.

SETTINGS

The setting mode allows you to change the information displayed in the vehicle information display:

- Driver Assistance (if so equipped)
- Vehicle Settings
- Main Menu Selection
- Body Color
- Maintenance
- Alarms
- Language
- Units
- Welcome Effects
- Factory Reset

Driver Assistance (if so equipped)

The driver assistance menu allows the user to change the various driving aids.

Menu item			Result
Driving Aids			Displays available Driving Aids
	Forward		Displays available forward driving aids.
		Assistance (DCA)	Allows user to turn the Distance Control Assist (DCA) system ON/OFF. For additional information, refer to “Distance Control Assist (DCA)” in the “Starting and driving” section of this manual.
	Lane		Displays available lane driving aids.
		Lane	Allows user to turn the Lane Departure Warning (LDW) system ON/OFF. For additional information, refer to “Lane Departure Warning (LDW)” in the “Starting and driving” section of this manual.
		Assistance (LDP)	Allows user to turn the Lane Departure Prevention (LDP) system ON/OFF. For additional information, refer to “Lane Departure Prevention (LDP) system” in the “Starting and driving” section of this manual.
	Blind Spot		Displays available blind spot driving aids and settings.
		Blind Spot	Allows user to turn the Blind Spot Warning system ON/OFF. For additional information, refer to “Blind Spot Warning (BSW)” in the “Starting and driving” section of this manual.
		Assistance (BSI)	Allows user to turn the Blind Spot Intervention (BSI) system ON/OFF. For additional information, refer to “Blind Spot Intervention ®(BSI) system” in the “Starting and driving” section of this manual.
		Brightness	Allows user to choose between standard (STD), dark or bright settings for the Blind Spot display.
Back-Up Collision Interv.			Allows user to turn the Back-Up Collision Intervention system ON/OFF. For additional information, refer to “Back-Up Collision Intervention (BCI)” in the “Starting and driving” section of this manual.
Forward Emergency Braking			Allows user to turn the Forward Emergency Braking system ON/OFF. For additional information, refer to “Forward Emergency Braking (FEB)” in the “Starting and driving” section of this manual.

Vehicle Settings

The vehicle settings allow the user to change the settings for lights, wipers, locking, keys, and other vehicle settings.

Menu item		Result
Welcome Light		Allows the user the turn the Welcome Light ON/OFF
Auto Room Lamp		Allows the user to turn the Auto Room Lamp ON/OFF
Light Sensitivity		Allows the user to change when the lights illuminate based on the brightness outside the vehicle
Light Off Delay		Allows the user to change the duration of time, from 0 to 180 seconds, that the automatic headlights stay on after the vehicle is shut off
Rain Sensor (if so equipped)		Allows user to turn the Rain Sensor ON/OFF. For additional information, refer to “Wiper and washer switch” in this section.
Wiper with Speed		Allows user to turn the Wiper with Speed feature ON/OFF. For additional information, refer to Wiper and washer switch” in this section.
I-Key Door Lock		Allows user to turn the I-Key Door Lock ON/OFF. When this item is turned on, the request switch on the door is activated.
Selective Unlock		Allows user to turn Selective Unlock ON/OFF. When turned on, only the driver’s door is unlocked after the door unlock operation. When the door handle request switch on the driver’s or front passenger’s side door is pushed to be unlocked, only the corresponding door is unlocked first. All the doors can be unlocked if the door unlock operation is performed again within 1 minute. When this item is turned to OFF, all the doors will be unlocked after the door unlock operation is performed once.
Auto Door Unlock		Displays the options for the Auto Door Unlock
	Off	Doors will have to be manually unlocked
	IGN Off	Doors will unlock when the ignition is turned OFF
	Shift into P	Doors will unlock when the vehicle is shifted into P (Park)
Answer Back Horn		Allows user to turn Answer Back Horn ON/OFF. When turned on, the horn will chirp and the hazard indicators will flash once when locking the vehicle with the Intelligent Key. For additional information, refer to “Answer back horn feature” in the “pre-driving checks and adjustments” section of this manual.
Remote Start (if so equipped)		Allows user to turn the Remote Start ON/OFF. When turned off, the vehicle cannot be started using the Intelligent Key.
Battery Saver		Allows the user to turn the Battery Saver feature ON/OFF. When turned on, this feature will turn off the ignition switch after a period of time if left in the ACC or ON position.

Menu item	Result
Exit Seat Slide (if so equipped)	Allows the user to turn the Exit Seat Slide ON/OFF. When turned on, this feature will move the driver's seat backward for an easy exit when the ignition is turned off and the driver's door is opened. After getting into the vehicle and placing the ignition switch in the ACC position, the driver's seat will move to the previous set position. For additional information, refer to "Automatic drive positioner" in the "Pre-driving checks and adjustments" section of this manual.
Exit Steering Up (if so equipped)	Allows the user to turn the Exit Steering Up feature ON/OFF. When turned on, this feature will move the steering wheel upward for an easy exit when the ignition is turned off and the driver's door is opened. After getting into the vehicle and placing the ignition switch in the ACC position, the steering wheel moves to the previous position. For additional information, refer to "Automatic drive positioner" in the "Pre-driving checks and adjustments" section of this manual.

Main Menu Selection

The main menu selection menu allows the user to customize the information that appears in the vehicle information display when the ignition is placed in the ON position.

Menu item	Result
Driver Assistance (if so equipped)	Allows user to turn the Driver Assistance display ON/OFF in the vehicle information display
Trip Computer	Allows user to turn the Trip Computer display ON/OFF in the vehicle information display
Tire Pressures	Allows user to turn the Tire Pressures display ON/OFF in the vehicle information display
Fuel Economy	Allows user to turn the Fuel Economy display ON/OFF in the vehicle information display

Body Color

The body color menu allows the user to customize the information that appears in the vehicle information display.

Menu item	Result
Body Color	Allows user to select the color of the vehicle that appears in the vehicle information display

Maintenance

The maintenance menu allows the user to set reminders for various vehicle maintenance intervals.

⚠WARNING

The tire replacement indicator is not a substitute for regular tire checks, including tire pressure checks. For additional information, refer to "Changing wheels and tires" in the "Maintenance and do-it-yourself" section of this manual. Many factors including tire inflation, alignment, driving habits and road conditions affect tire wear and when tires should be replaced. Setting the tire replacement indicator for a certain driving distance does not mean your tires will last that long. Use the tire replacement indicator as a guide only and always perform regular tire checks. Failure to perform regular tire checks, including tire pressure checks could result in tire failure. Serious vehicle damage could occur and may lead to a collision, which could result in serious personal injury or death.

Menu item		Result
Maintenance		Displays various Maintenance settings
	Service	This indicator appears when the customer set distance is reached for checking or replacing maintenance items like the engine oil, oil filter and tires. You can set or reset the distance for checking or replacing the items. You can set or reset the distance for service type items. For scheduled maintenance items and intervals, refer to your "INFINITI Service and Maintenance Guide."
	Tire	This indicator appears when the customer set distance is reached for replacing tires. You can set or reset the distance for replacing tires.
	Other	This indicator appears when the customer set distance is reached for checking or replacing maintenance items other than the engine oil, oil filter and tires. Other maintenance items can include such things as air filter or tire rotation. The distance for checking or replacing the items can be set or reset.

Alarms

The Alarms menu allows the user to set various alerts.

Menu item	Result
Outside Temp.	Allows user to turn the Outside Temp. alarm ON/OFF
Timer Alert	Allows user to set the Timer Alert for a specific interval
Navigation (if so equipped)	Allows user to turn the Navigation alarm ON/OFF

Language

The language menu allows the user to change the languages displayed in the vehicle information display.

The language of the center display/navigation can be changed independently of the vehicle information display. For additional information refer to “How to use the Setting Button” in the “Monitor, climate, audio, phone and voice recognition systems” section of this manual.

Menu item	Result
Language	Displays available languages that can be used in the vehicle information display

Units

The Units menu allows the user to change the units shown in the vehicle information display. The units of the center display/navigation can be changed independently of the vehicle information display. For additional information, refer to “How to use the Setting Button” in the “Monitor, climate, audio, phone and voice recognition systems” section of this manual.

Menu item	Result
Mileage	Allows user to select different mileage display units
Tire Pressures	Allows user to select different pressure display units
Temperature	Allows user to select different temperature display units

Welcome Effect

The Welcome Effect menu allows the user to customize the Welcome Effect feature that appears when the ignition switch is placed in the ACC or ON position.

Menu item	Result
Welcome Effect	Allows user to turn the Welcome Effects ON/OFF

Factory Reset

The factory reset menu allows the user to restore the vehicle information display settings to factory status.

Menu item	Result
Factory Reset	Allows user to reset the vehicle information display settings to the original factory settings. Once selected, the user can confirm or deny the reset

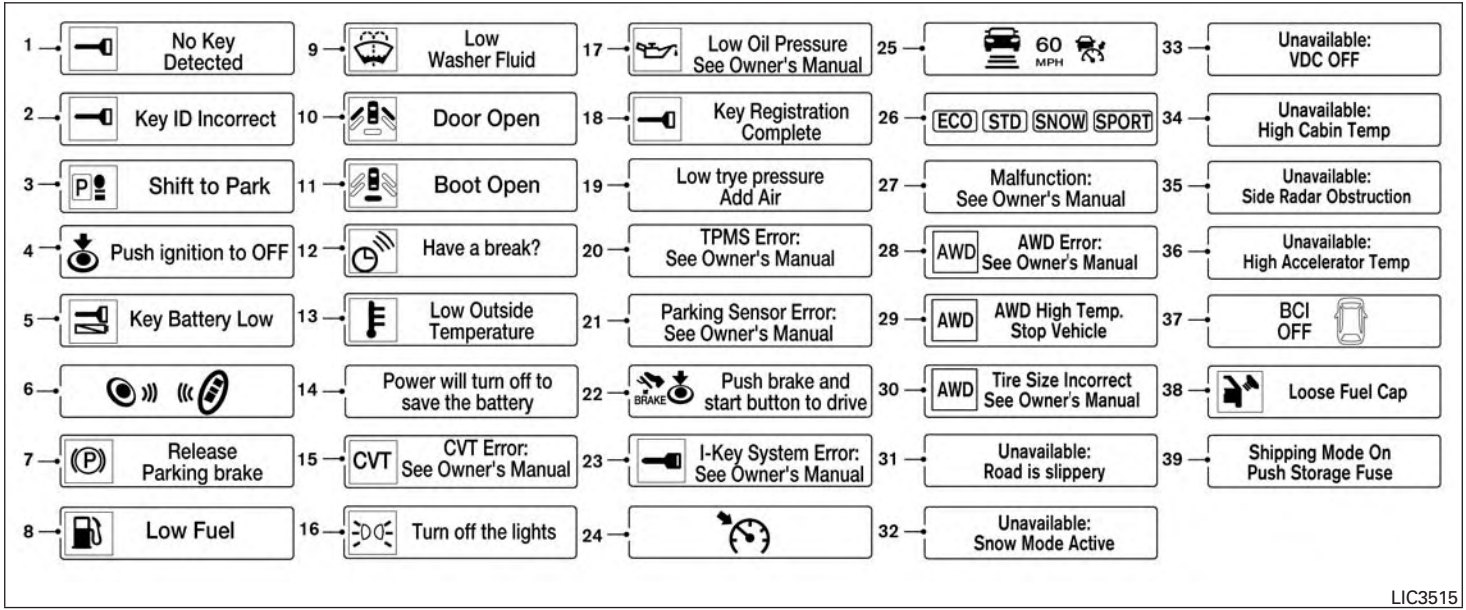

VEHICLE INFORMATION DISPLAY WARNINGS AND INDICATORS

1. No Key Detected
2. Key ID Incorrect
3. Shift to Park
4. Push ignition to OFF
5. Key Battery Low
6. Engine start operation for Intelligent Key system
7. Release Parking Brake
8. Low Fuel
9. Low Washer Fluid
10. Door Open
11. Liftgate Open

12. Time for a driver break?
13. Low Outside Temperature
14. Power will turn off to save the battery
15. CVT Error: See Owner's Manual
16. Turn off the lights
17. Low Oil Pressure: See Owner's Manual
18. Key Registration Complete
19. Tire Pressure Low - Add Air
20. TPMS Error: See Owner's Manual
21. Parking Sensor Error: See Owner's Manual
22. Push brake and start button to drive
23. I-Key System Error: See Owner's Manual
24. Cruise control indicator (if so equipped)
25. Intelligent Cruise Control (ICC) indicators (if so equipped)
26. INFINITI drive mode selector indicators
27. Malfunction: See Owner's Manual (if so equipped)
28. AWD Error: See Owner's Manual (if so equipped)
29. AWD High Temp. Stop Vehicle (if so equipped)
30. Tire Size Incorrect: See Owner's Manual (if so equipped)
31. Unavailable: Road is slippery (if so equipped)
32. Unavailable: Snow Mode Active (if so equipped)
33. Unavailable: VDC OFF (if so equipped)
34. Unavailable: High Cabin Temp (if so equipped)
35. Unavailable: Side Radar Obstruction (if so equipped)
36. Unavailable: High Accelerator Temp (if so equipped)
37. BCI OFF (if so equipped)
38. Loose Fuel Cap
39. Shipping Mode On Push Storage Fuse

No Key Detected

This warning appears when the Intelligent Key is left outside the vehicle with the ignition switch in the ON or ACC position. Make sure the Intelligent Key is inside the vehicle.

Key ID Incorrect

The warning appears when the ignition switch is turned from the OFF position and the Intelligent Key is not recognized by the system. You cannot start the engine with an unregistered key.

For additional information, refer to "INFINITI Intelligent Key System" in the "Pre-driving checks and adjustments" section of this manual.

Shift to Park

This warning illuminates when the ignition switch is in the ACC or OFF position and the shift lever is in any position other than P (Park). Also, a chime sounds when the ignition switch is in the OFF position.

If this warning illuminates, move the shift lever to the P (Park) position or start the engine.

For additional information, refer to "INFINITI Intelligent Key" in the "Pre-driving checks and adjustments" section of this manual.

Push ignition to OFF

After the Push ignition to OFF warning illuminates, the warning will illuminate if the ignition switch is placed in the ACC position when the shift lever is moved to the P (Park) position.

To turn off the Push warning, place the ignition switch in the ON position and then in the LOCK position.

Key Battery Low

This indicator illuminates when the Intelligent Key battery is running out of power.

If this indicator illuminates, replace the battery with a new one. For additional information, refer to “Battery replacement” in the “Maintenance and do-it-yourself” section of this manual.

Engine start operation for Intelligent Key system

This indicator appears when the battery of the Intelligent Key is low and when the Intelligent Key system and the vehicle are not communicating normally.

If this appears, touch the ignition switch with the Intelligent Key while depressing the brake pedal. For additional information, refer to “INFINITI Intelligent Key battery discharge” in the “Starting and driving” section of this manual.

Release Parking Brake

This warning illuminates in the message area of the vehicle information display when the parking brake is set and the vehicle is driven.

Low Fuel

This warning illuminates when the fuel level in the fuel tank is getting low. Refuel as soon as it is convenient, preferably before the fuel gauge reaches 0 (Empty). **There will be a small reserve of fuel in the tank when the fuel gauge needle reaches 0 (Empty).**

Low Washer Fluid

This warning illuminates when the windshield-washer fluid is at a low level. Add windshield-washer fluid as necessary. For additional information, refer to “Windshield-washer fluid” in the “Maintenance and do-it-yourself” section of this manual.

Door Open

This warning illuminates when a door has been opened when the engine is running.

Liftgate Open

This warning illuminates when the liftgate has been opened when the engine is running.

Time for a driver break?

This indicator appears when the set time is reached. The time can be set up to six hours. For additional information, refer to “Settings” in this section.

Low Outside Temperature

This warning appears if the outside temperature is below 37°F (3°C). The temperature can be changed to display in Celsius or Fahrenheit. For additional information, refer to “Unit” in this section.

Power will turn off to save the battery

This warning appears in the message area of the vehicle information display after a period of time if the shift lever has not moved from the P (Park) position.

CVT Error: See Owner’s Manual

This warning illuminates when the there is a problem with the CVT system. If this warning comes on, have the system checked. It is recommended that you visit an INFINITI retailer for this service.

Turn off the lights

This warning appears when the headlights are left in the ON position when exiting the vehicle. Place the headlight switch to OFF or AUTO position. For additional information, refer to “Headlight and turn signal switch” in this section.

Low Oil Pressure: See Owner’s Manual

This warning appears in the message area of the vehicle information display if low oil pressure is detected. This gauge is not designed to indicate low oil level. **The low oil pressure warning is not designed to indicate a low oil level.** Use the dipstick to check the oil level. For additional

information, refer to “Engine oil” in the “Maintenance and do-it-yourself” section of this manual.

Key Registration Complete

This appears when a new Intelligent Key is registered to the vehicle.

Tire Pressure Low - Add Air

This warning appears when the low tire pressure warning light in the meter illuminates and low tire pressure is detected. The warning appears each time the ignition switch is placed in the ON position as long as the low tire pressure warning light remains illuminated. If this warning appears, stop the vehicle and adjust the tire pressures of all four tires to the recommended COLD tire pressure shown on the Tire and Loading Information label. For additional information, refer to “Low tire pressure warning light” in this section and “Tire Pressure Monitoring System (TPMS)” in the “Starting and driving” section of this manual.

TPMS Error: See Owner’s Manual

This warning appears when there is an error with your TPMS. If this warning comes on, it is recommended that you visit an INFINITI retailer.

Parking Sensor Error: See Owner’s Manual

This warning illuminates when there is an error with the system. For additional information, refer to “Front and rear sonar system” in the “Starting and driving” section of this manual.

Push brake and start button to drive

This indicator appears when the shift lever is in the P (Park) position.

This indicator also appears when the vehicle has been started with the remote start function (if so equipped).

This indicator means that the engine will start by pushing the ignition switch with the brake pedal depressed. You can start the engine from any position of the ignition switch.

I-Key System Error: See Owner’s Manual

After the ignition switch is pushed to the ON position, this light comes on for about 2 seconds and then turns off.

The I-Key System Error message warns of a malfunction with the Intelligent Key system. If the light comes on while the engine is stopped, it may be impossible to start the engine.

If the light comes on while the engine is running, you can drive the vehicle. However in these cases, it is recommended you contact an INFINITI retailer for repair as soon as possible.

Cruise control indicator (if so equipped)

This indicator shows the cruise control system status.

For additional information, refer to “Cruise control” in the “Starting and driving” section of this manual.

Intelligent Cruise Control (ICC) indicator (if so equipped)

This indicator shows the Intelligent Cruise Control (ICC) system status. The status is shown by the color. For additional information, refer to “Intelligent Cruise Control (ICC) System” in the “Starting and driving” section of this manual.

INFINITI drive mode selector indicators

These indicators show the current drive mode of the vehicle.

For additional information, refer to “INFINITI drive mode selector” in the “Starting and driving” section of this manual.

Malfunction: See Owner's Manual (if so equipped)

This warning appears when one or more of the following systems (if so equipped) is not functioning properly:

- Forward Emergency Braking (FEB)
- Lane Departure Warning (LDW)
- Blind Spot Warning (BSW)

If one or more of these warning appears, have the system checked. It is recommended you visit an INFINITI retailer for this service.

AWD Error: See Owner's Manual (if so equipped)

This warning appears when the all-wheel drive system is not functioning properly while the engine is running.

AWD High Temp. Stop Vehicle (if so equipped)

This warning may appear while trying to free a stuck vehicle due to increased oil temperature. The driving mode may change to 2-Wheel Drive (2WD). If this warning is displayed, stop the vehicle with the engine idling, as soon as it is safe to do so. Then if the warning turns off, you can continue driving.

Tire Size Incorrect: See Owner's Manual (if so equipped)

This warning may appear if there is a large difference between the diameters of the front and rear wheels. Pull off the road in a safe area, with the engine idling. Check that all the tire sizes are the same, that the tire pressure is correct and that the tires are not excessively worn.

Unavailable: Road is slippery (if so equipped)

This message appears when the Distance Control Assist (DCA) system becomes unavailable because the road is slippery. For additional information, refer to "Distance Control Assist (DCA)" in the "Starting and driving" section of this manual.

Unavailable: Snow Mode Active (if so equipped)

This message appears when the Distance Control Assist (DCA) system becomes unavailable because the SNOW Mode is selected. For additional information, refer to "Distance Control Assist (DCA)" in the "Starting and driving" section of this manual.

Unavailable: VDC OFF (if so equipped)

This message appears when the Distance Control Assist (DCA) system becomes unavailable because the VDC is turned OFF. For additional information, refer to "Distance Control Assist (DCA)" in the "Starting and driving" section of this manual.

Unavailable: High Cabin Temp. (if so equipped)

This message appears when the camera detects an interior temperature of more than approximately 104°F (40°C). For additional information, refer to "Lane Departure Warning (LDW)" in the "Starting and driving" section of this manual.

Unavailable: Side Radar Obstruction (if so equipped)

This message appears when the Distance Control Assist (DCA) system becomes unavailable because a radar blockage is detected. For additional information, refer to "Blind Spot Warning (BSW)" in the "Starting and driving" section of this manual.

Unavailable: High Accelerator Temp. (if so equipped)

This message appears when the Back-up Collision Intervention (BCI) system becomes unavailable because of an interior temperature greater than approximately 104°F (40°C). For additional information, refer to "Back-up Collision Intervention (BCI) system" in the "Starting and driving" section of this manual.

BCI OFF (if so equipped)

This message appears when the Back-up Collision Intervention (BCI) system is turned OFF using the BCI switch. For additional information, refer to “Back-up Collision Intervention (BCI) system” in the “Starting and driving” section of this manual.

Loose Fuel Cap

This warning appears when the fuel-filler cap is not tightened correctly after the vehicle has been refueled. For additional information, refer to “Fuel-filler cap” in the “Pre-driving checks and adjustments” section of this manual.

Shipping Mode On Push Storage Fuse

This warning may appear if the extended storage switch is not pushed in. When this warning appears, push in the extended storage switch to turn off the warning. For additional information, refer to “Extended storage switch” in the “Instruments and controls” section of this manual.

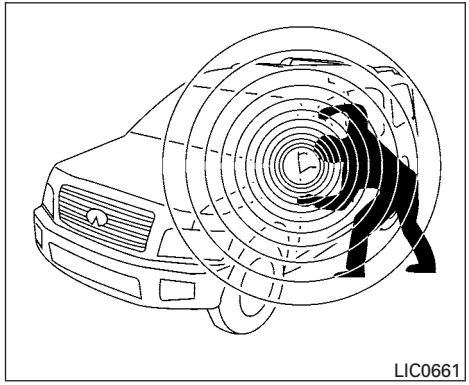

Your vehicle has two types of security systems:

- Vehicle security system
- INFINITI Vehicle Immobilizer System

VEHICLE SECURITY SYSTEM

The vehicle security system provides visual and audible alarm signals if someone opens the doors, liftgate or hood when the system is armed. It is not, however, a motion detection type system that activates when a vehicle is moved or when a vibration occurs.

The system helps deter vehicle theft but cannot prevent it, nor can it prevent the theft of interior or exterior vehicle components in all situations. Always secure your vehicle even if parking for a brief period. Never leave your Intelligent Key in the vehicle, and always lock the vehicle when unattended. Be aware of your surroundings, and park in secure, well-lit areas whenever possible.

Many devices offering additional protection, such as component locks, identification markers, and tracking systems, are available at auto supply stores and specialty shops. An INFINITI retailer may also offer such equipment. Check with your insurance company to see if you may be eligible for discounts for various theft protection features.

How to arm the vehicle security system

1. Close all windows and the moonroof. **The system can be armed even if the windows and moonroof are open.**
2. Remove the Intelligent Key from the vehicle.
3. Close all doors, hood and liftgate. Lock all doors. The doors can be locked with the Intelligent Key, door handle request switch or power door lock switch.

   Key fob operation:

4. Confirm that the indicator light comes on. The indicator stays illuminated for a period of time indicating that the system is in the pre-armed phase.
   The indicator light will blink every 3 seconds once the security system is armed.
   If during the pre-armed phase one of the following occurs, the system will not arm:
   - Any door is unlocked with the mechanical key
   - A door is opened with the release button with the Intelligent Key on your person
   - The doors are unlocked using the unlock button on the Intelligent Key
   - The ignition switch is placed in the ACC or ON position

- **Even when the driver and/or passengers are in the vehicle, the system will activate when all the doors, hood and liftgate are locked with the ignition switch placed in the LOCK position. When placing the ignition switch in the ACC or ON position, the system will be released.**

Vehicle security system activation

The vehicle security system will give the following alarm:

- The turn signals blink and the horn sounds intermittently.
- The alarm automatically turns off after a period of time. However, the alarm reactivates if the vehicle is tampered with again. The alarm can be shut off by unlocking the driver's door or liftgate with the key, or by pressing the button on the Intelligent Key.

The alarm is activated by:

- opening the door or liftgate without using the key or Intelligent Key (even if the door is unlocked by releasing the door inside lock switch).

How to stop an activated alarm

The alarm stops only by unlocking the driver's door or the liftgate with the key, pressing the button on the Intelligent Key, or pressing the request switch on the driver's or passenger's door with the Intelligent Key in range of the door handle.

INFINITI VEHICLE IMMOBILIZER SYSTEM

The INFINITI Vehicle Immobilizer System will not allow the engine to start without the use of a registered INFINITI Vehicle Immobilizer System key.

If the engine fails to start using a registered INFINITI Vehicle Immobilizer System key (for example, when interference is caused by another INFINITI Vehicle Immobilizer System key, an automated toll road device or automatic payment device on the key ring), restart the engine using the following procedures:

1. Leave the ignition switch in the ON position for approximately 5 seconds.
2. Place the ignition switch in the OFF or LOCK position, and wait approximately 10 seconds.
3. Repeat steps 1 and 2.
4. Restart the engine while holding the device (which may have caused the interference) separate from the registered INFINITI Vehicle Immobilizer System key.

If the no start condition re-occurs, INFINITI recommends placing the registered INFINITI Vehicle Immobilizer System key on a separate key ring to avoid interference from other devices.

FCC Notice:

For USA:

This device complies with part 15 of the FCC Rules. Operation is subject to the following two conditions: (1) This device may not cause harmful interference, and (2) this device must accept any interference received, including interference that may cause undesired operation.

NOTE:

Changes or modifications not expressly approved by the party responsible for compliance could void the user's authority to operate the equipment.

For Canada:

This device complies with Industry Canada license-exempt RSS standard(s). Operation is subject to the following two conditions: (1) this device may not cause interference, and (2) this device must accept any interference, including interference that may cause undesired operation of the device.

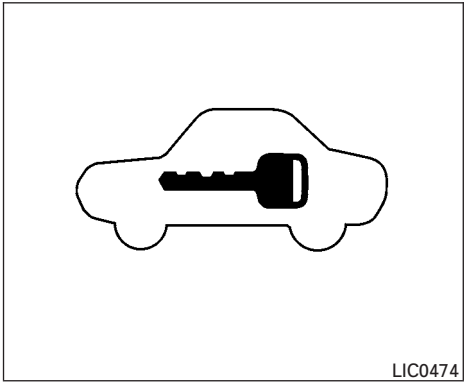

Security indicator light

The security indicator light blinks whenever the ignition switch is in the LOCK, OFF or ACC position. This function indicates the INFINITI Vehicle Immobilizer System is operational.

If the INFINITI Vehicle Immobilizer System is malfunctioning, the light will remain on while the ignition switch is in the ON position.

If the light still remains on and/or the engine will not start, seek service for the INFINITI Vehicle Immobilizer System as soon as possible. Please bring all registered keys that you have. It is recommended that you visit an INFINITI retailer for this service.

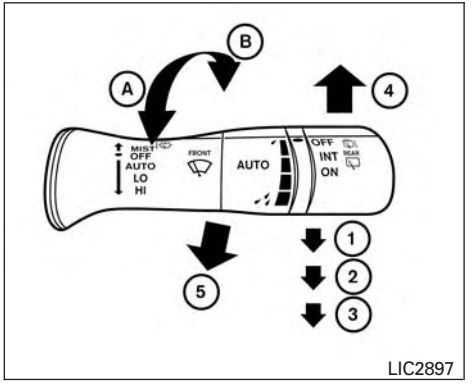

Type A (if so equipped)

SWITCH OPERATION

⚠ WARNING

In freezing temperatures the washer solution may freeze on the windshield and obscure your vision which may lead to an accident. Warm the windshield with the defroster before you wash the windshield.

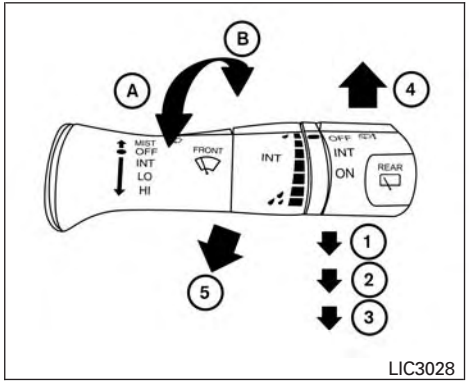

Type B (if so equipped)

⚠ CAUTION

- **Do not operate the washer continuously for more than 30 seconds.**
- **Do not operate the washer if the windshield-washer fluid reservoir is empty.**
- **Do not fill the windshield-washer fluid reservoir with windshield-washer fluid concentrates at full strength. Some methyl alcohol based windshield-washer fluid concentrates may permanently stain the grille if spilled while filling the windshield-washer fluid reservoir.**
- **Pre-mix windshield-washer fluid concentrates with water to the manufacturer's recommended levels before pouring the fluid into the windshield-washer fluid reservoir. Do not use the windshield-washer fluid reservoir to mix the windshield-washer fluid concentrate and water.**

NOTE:

If the windshield wiper operation is interrupted by snow or ice, the wiper may stop moving to protect its motor. If this occurs, turn the wiper switch to the OFF position and remove the snow or ice that is on and around the wiper arms. In approximately 1 minute, turn the switch on again to operate the wiper.

The windshield wiper and washer operates when the ignition switch is in the ON position.

Push the lever down to operate the wiper at the following speed:

① Intermittent (INT) — intermittent operation can be adjusted by turning the knob toward Ⓐ (Slower) or Ⓑ (Faster). Also, the intermittent operation speed varies in accordance with the vehicle speed. (For example, when the vehicle speed is high, the intermittent operation speed will be faster.) Further, if so equipped, the Rain Sensing feature will adjust the speed of the intermittent operation. For additional information, refer to "Rain sensing auto wiper system" in this section.

② Low (LO) — continuous low speed operation

③ High (HI) — continuous high speed operation

Push the lever up ④ to have one sweep operation (MIST) of the wiper.

Pull the lever toward you ⑤ to operate the washer. The wiper will also operate several times.

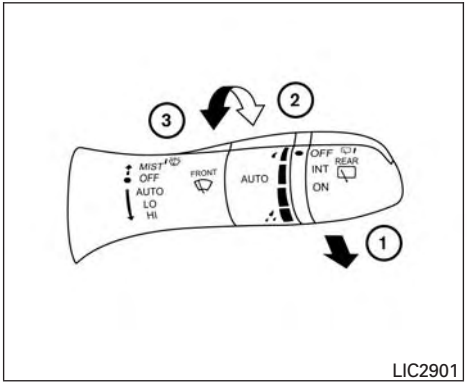

RAIN-SENSING AUTO WIPER SYSTEM (if so equipped)

⚠ CAUTION

- **Do not touch the rain sensor and around it when the wiper switch is in the AUTO position and the ignition switch is in the ON position. The wipers may operate unexpectedly and cause an injury or may damage a wiper.**
- **The rain-sensing auto wipers are intended for use during rain. If the switch is left in the AUTO position, the wipers may operate unexpectedly when dirt, fingerprints, oil film or insects are stuck on or around the sensor. The wipers may also operate when exhaust gas or moisture affect the rain sensor.**
- **When the windshield glass is coated with water repellent, the speed of the rain-sensing auto wipers may be higher even though the amount of the rainfall is small.**
- **Be sure to turn off the rain-sensing auto wiper system when you use a car wash.**
- **The rain-sensing auto wipers may not operate if rain does not hit the rain sensor even if it is raining.**
- **Using genuine wiper blades is recommended for proper operation of the rain-sensing auto wiper system. For additional information, refer to "Windshield wiper blades" in the "Maintenance and do-it-yourself" section of this manual.**

The rain-sensing auto wiper system can automatically turn on the wipers and adjust the wiper speed depending on the rainfall and the vehicle speed by using the rain sensor located on the upper part of the windshield.

To set the rain-sensing auto wiper system, rotate the lever to the AUTO position ①. The wiper will sweep once while the ignition switch is in the ON position.

The rain sensor sensitivity level can be adjusted by turning the knob toward the front ② (High) or toward the rear ③ (Low).

– High — High sensitive operation

– Low — Low sensitive operation

To turn the rain-sensing auto wiper system off, rotate the lever to the OFF position, or rotate the lever to the LO or HI position.

For additional information on disabling the rain-sensing feature, refer to "How to use the vehicle information display" in "Vehicle information display" in this section.

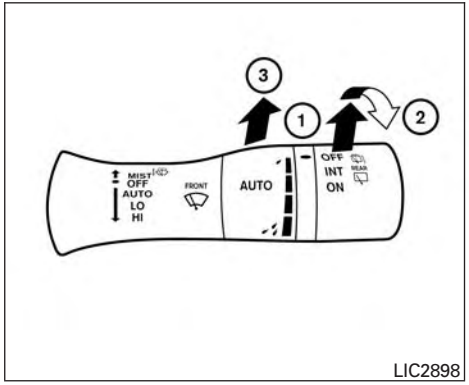

LIC2898

REAR SWITCH OPERATION

⚠ WARNING

In freezing temperatures the washer solution may freeze on the rear window and obscure your vision which may lead to an accident. Warm the rear window with the defroster before you wash the rear window.

⚠ CAUTION

- **Do not operate the washer continuously for more than 30 seconds.**
- **Do not operate the washer if the windshield-washer fluid reservoir is empty.**
- **Do not fill the windshield-washer fluid reservoir with windshield-washer fluid concentrates at full strength. Some methyl alcohol based windshield-washer fluid concentrates may permanently stain the grille if spilled while filling the windshield-washer fluid reservoir.**
- **Pre-mix windshield-washer fluid concentrates with water to the manufacturer's recommended levels before pouring the fluid into the windshield-washer fluid reservoir. Do not use the windshield-washer fluid reservoir to mix the windshield-washer fluid concentrate and water.**

If the rear window wiper operation is interrupted by snow, etc., the wiper may stop moving to protect its motor. If this occurs, turn the wiper switch to OFF and remove the snow, etc. on and around the wiper arms. After about 1 minute, turn the switch on again to operate the wiper.

The rear window wiper and washer operate when the ignition switch is in the ON position. Turn the switch clockwise from the OFF position to operate the wiper.

① Intermittent (INT) — intermittent operation (not adjustable)

② Low (ON) — continuous low speed operation

Push the switch forward ③ to operate the washer. The wiper will also operate several times.

REAR WINDOW AND OUTSIDE MIRROR DEFROSTER SWITCH

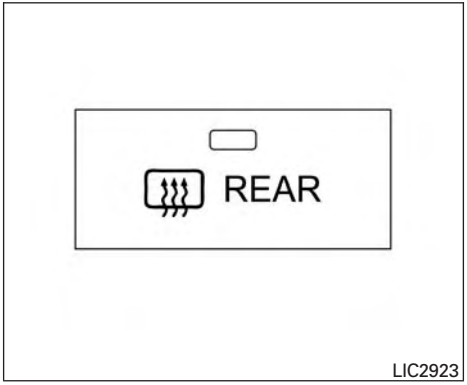

To defrost the rear window glass and outside mirrors:

Start the engine and push the rear window defroster switch. The rear window defroster indicator light on the display screen comes on. Push the switch again to turn the defroster off.

The rear window defroster automatically turns off after approximately 15 minutes.

CAUTION

When cleaning the inner side of the rear window, be careful not to scratch or damage the rear window defroster.

HEADLIGHT AND TURN SIGNAL SWITCH

XENON HEADLIGHTS

WARNING

HIGH VOLTAGE

- **When xenon headlights are on, they produce a high voltage. To prevent an electric shock, never attempt to modify or disassemble. Always have your xenon headlights replaced by a certified service technician. It is recommended you visit an INFINITI retailer for this service.**
- **Xenon headlights provide considerably more light than conventional headlights. If they are not correctly aimed, they might temporarily blind an oncoming driver or the driver ahead of you and cause a serious accident. If headlights are not aimed correctly, immediately take your vehicle to a certified service technician and have the headlights adjusted correctly.**

When the xenon headlight is initially turned on, its brightness or color varies slightly. However, the color and brightness will soon stabilize.

- **The life of xenon headlights will be shortened by frequent on-off operation. It is generally desirable not to turn off the headlights for short intervals (for example, when the vehicle stops at a traffic signal).**
- **If the xenon headlight bulb is close to burning out, the brightness will drastically decrease, the light will start blinking, or the color of the light will become reddish. If one or more of the above signs appear, it is recommended you visit an INFINITI retailer.**

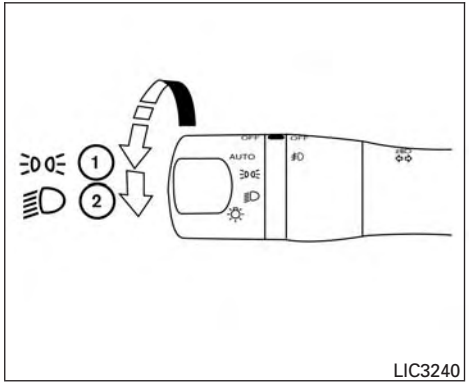

LIC3240

HEADLIGHT CONTROL SWITCH

Lighting

① Rotate the switch to the position, and the front parking, tail, license plate, and instrument panel lights will come on.

② Rotate the switch to the position, and the headlights will come on and all the other lights remain on.

⚠ CAUTION

Use the headlights with the engine running to avoid discharging the vehicle battery.

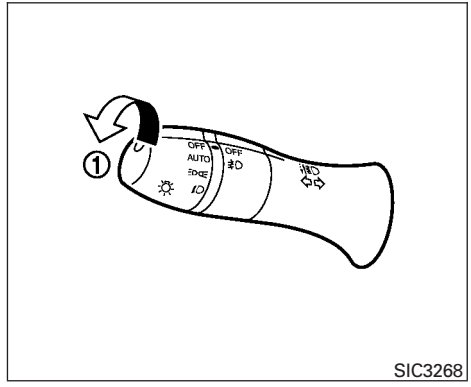

SIC3268

Autolight system

The autolight system allows the headlights to turn on and off automatically. The autolight system can:

- Turn on the headlights, front parking, tail, license plate and instrument panel lights automatically when it is dark.
- Turn off all the lights when it is light.
- Keep all the lights on for a period of time after you place the ignition switch in the OFF position and all doors are closed.

NOTE:

Autolight activation sensitivity and the time delay for autolight shutoff can be adjusted. For additional information, refer to "Vehicle information display" in this section.

To turn on the autolight system:

- Turn the headlight switch to the AUTO position ①.
- Turn the ignition switch to ON.
- The autolight system automatically turns the headlights on and off.

Initially, if the ignition switch is turned off and a door is opened and left open, the headlights remain on for a period of time. If another door is opened while the headlights are on, then the timer is reset.

To turn the autolight system off, turn the switch to the OFF, , or position.

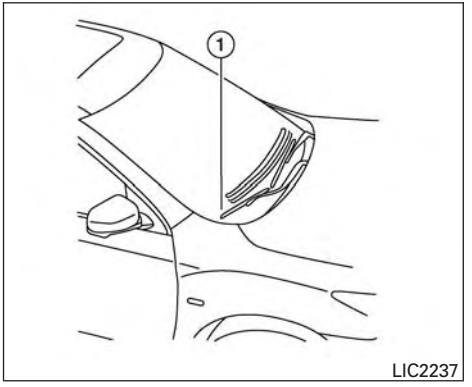

Be sure you do not put anything on top of the autolight sensor located in the top side ① of the instrument panel. The autolight sensor controls the autolight; if it is covered, the autolight sensor reacts as if it is dark out and the headlights will illuminate. If this occurs while parked with the engine off and the ignition switch placed in the ON position, your vehicle's battery could become discharged.

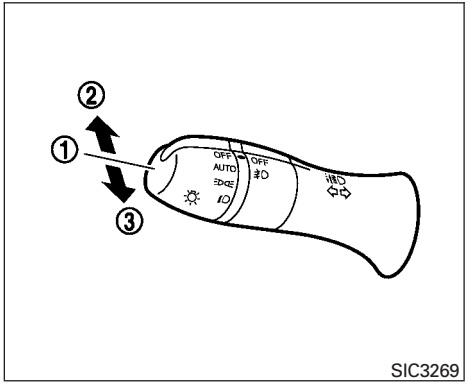

Headlight beam select

① To select the high beam function, push the lever forward. The high beam lights come on and the light illuminates.

② Pull the lever back to select the low beam.

③ Pulling and releasing the lever flashes the headlight high beams on and off.

Battery saver system

If the ignition switch is placed in the OFF position while the headlight switch is in the or position, the headlights will turn off after a period of time.

⚠ CAUTION

Even though the battery saver feature automatically turns off the headlights after a period of time, you should turn the headlight switch to the OFF position when the engine is not running to avoid discharging the vehicle battery.

Automatic headlight aiming control (if so equipped)

Your vehicle may be equipped with an automatic headlight levelling system. The headlight axis is controlled automatically.

INFINITI recommends that you consult the local regulations on the use of lights.

For additional information, refer to “Xenon headlight” in this section.

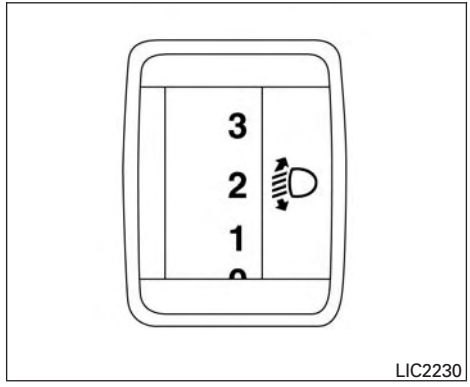

Manual headlight aiming control (if so equipped)

Depending on the number of occupants in the vehicle and the load it is carrying, the headlight axis may be higher than desired. If the vehicle is traveling on a hilly road, the headlights may directly hit the rearview mirror of the vehicle ahead or the windshield of the oncoming vehicle. The light axis can be lowered with the operation of the switch.

The larger the number designated on the switch, the lower the axis.

When traveling without a heavy load or on a flat road, select position 0.

⚠ WARNING

Xenon headlights are extremely bright compared to conventional headlights. If the xenon headlights hit the rearview mirror of the vehicle ahead or the windshield of oncoming vehicle, the driver of these vehicles may have difficulty driving because of the brightness. Use the headlight aiming control switch to lower the light axis. For additional information, refer to “Xenon headlights” in this section.

DAYTIME RUNNING LIGHT SYSTEM

The daytime running lights automatically illuminate when the engine is started with the parking brake released. The daytime running lights operate with the headlight switch in the OFF position or in the position. Turn the headlight switch to the position for full illumination when driving at night.

If the parking brake is applied before the engine is started, the daytime running lights do not illuminate. The daytime running lights illuminate when the parking brake is released. The daytime running lights will remain on until the ignition switch is placed in the OFF position.

⚠ WARNING

When the daytime running light system is active, tail lights on your vehicle are not on. It is necessary at dusk to turn on your headlights. Failure to do so could cause an accident injuring yourself and others.

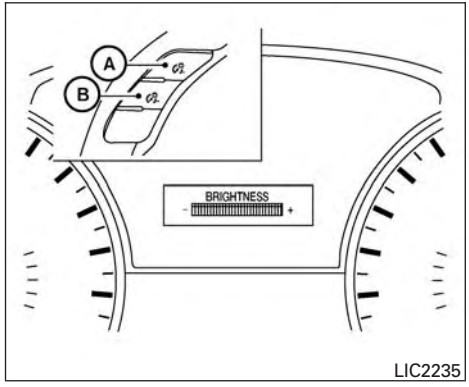

INSTRUMENT BRIGHTNESS CONTROL

Press the "-" button Ⓐ to decrease the brightness of instrument panel lights.

Press the "+" button Ⓑ to increase the brightness of instrument panel lights.

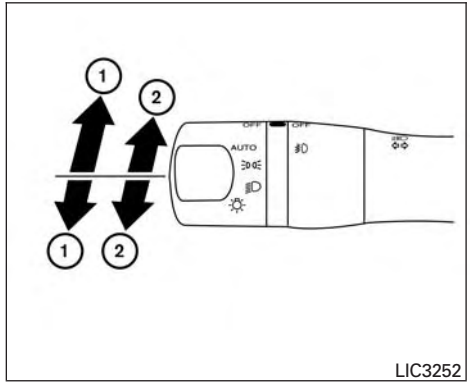

TURN SIGNAL SWITCH

Turn signal

① Move the lever up or down to signal the turning direction. When the turn is completed, the turn signal cancels automatically.

Lane change signal

② Move the lever up or down until the turn signal begins to flash, but the lever does not latch, to signal a lane change. Hold the lever until the lane change is completed.
Move the lever up or down until the turn signal begins to flash, but the lever does not latch, and release the lever. The turn signal will automatically flash three times.

Choose the appropriate method to signal a lane change based on road and traffic conditions.

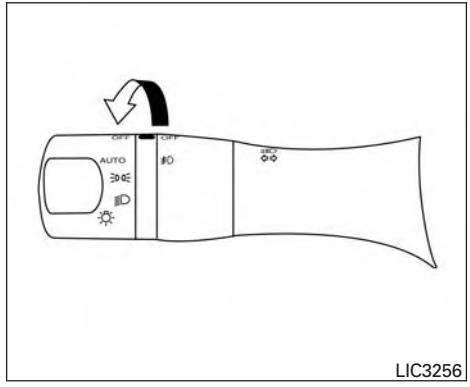

LIC3256

FOG LIGHT SWITCH

To turn the fog lights on, rotate the headlight switch to the position, then rotate the fog light switch to the position.
To turn the fog lights on with the headlight switch in the AUTO position, the headlights must be on, then rotate the fog light switch to the position.
To turn the fog lights off, rotate the fog light switch to the OFF position.

The headlights must be on and the low beams selected for the fog lights to operate. The fog lights automatically turn off when the high beam headlights are selected.

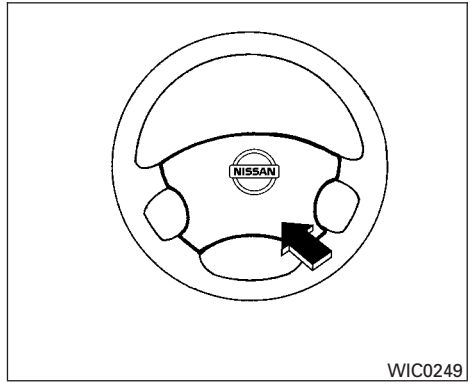

WIC0249

To sound the horn, push near the horn icon on the steering wheel.

⚠ WARNING

Do not disassemble the horn. Doing so could affect proper operation of the supplemental front air bag system. Tampering with the supplemental front air bag system may result in serious personal injury.

HEATED SEAT SWITCHES (if so equipped)

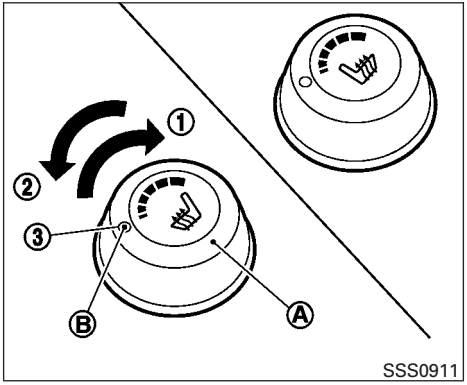

⚠ WARNING

Do not use or allow occupants to use the seat heater if you or the occupants cannot monitor elevated seat temperatures or have an inability to feel pain in body parts that contact the seat. Use of the seat heater by such people could result in serious injury.

⚠ CAUTION

- **The battery could run down if the seat heater is operated while the engine is not running.**
- **Do not use the seat heater for extended periods or when no one is using the seat.**
- **Do not put anything on the seat which insulates heat, such as a blanket, cushion, seat cover, etc. Otherwise, the seat may become overheated.**
- **Do not place anything hard or heavy on the seat or pierce it with a pin or similar object. This may result in damage to the heater.**
- **Any liquid spilled on the heated seat should be removed immediately with a dry cloth.**
- **When cleaning the seat, never use gasoline, benzine, thinner, or any similar materials.**
- **If any malfunctions are found or the heated seat does not operate, turn the switch off and have the system checked. It is recommended you visit an INFINITI retailer for this service.**

The front seats are warmed by built-in heaters. The switches are located on the center console and can be operated independently of each other.

1. Start the engine.
2. Turn the control knob Ⓐ to the right ① and select the desired heat range.
   - For high heat, turn the knob to the right ①.
   - For low heat, turn the knob to the left ②.
   - The indicator light Ⓑ will illuminate when the heater is on.
3. To turn off the heater, return the knob to the OFF position ③. Make sure that the indicator light turns off.

   The heater is controlled by a control module, automatically turning the heater on and off.

   The indicator light will remain on as long as the switch is on.

   When the seat is warmed, or before you leave the vehicle, be sure to turn the switch off.

HEATED 2ND ROW SEAT SWITCHES
(if so equipped)

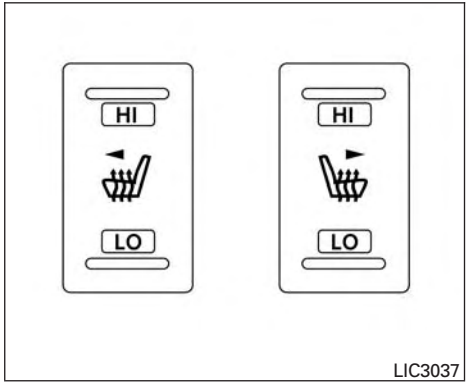

LIC3037

⚠ WARNING

Do not use or allow occupants to use the seat heater if you or the occupants cannot monitor elevated seat temperatures or have an inability to feel pain in body parts that contact the seat. Use of the seat heater by such people could result in serious injury.

⚠ CAUTION

- **The battery could run down if the seat heater is operated while the engine is not running.**
- **Do not use the seat heater for extended periods or when no one is using the seat.**
- **Do not put anything on the seat which insulates heat, such as a blanket, cushion, seat cover, etc. Otherwise, the seat may become overheated.**
- **Do not place anything hard or heavy on the seat or pierce it with a pin or similar object. This may result in damage to the heater.**
- **Any liquid spilled on the heated seat should be removed immediately with a dry cloth.**
- **When cleaning the seat, never use gasoline, benzine, thinner, or any similar materials.**
- **If any malfunctions are found or the heated seat does not operate, turn the switch off and have the system checked. It is recommended you visit an INFINITI retailer for this service.**

The rear seats are warmed by built-in heaters. The switches are located on the rear of the front center console and can be operated independently of each other.

1. Start the engine.
2. Push the LO or HI position of the switch, as desired. The indicator light in the switch will illuminate.

   The heater is controlled by a thermostat, automatically turning the heater on and off. The indicator light will remain on as long as the switch is on.
3. When the seat is warmed or before you leave the vehicle, be sure to turn the switch off.

CLIMATE CONTROLLED SEAT SWITCHES (if so equipped)

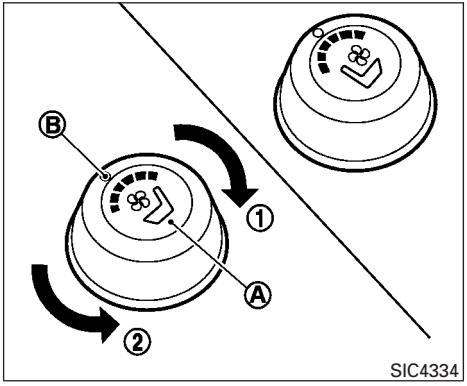

⚠WARNING

Do not use or allow occupants to use the climate controlled seats if you or the occupants can not monitor seat temperatures or have an inability to feel pain in those body parts in contact with the seat. Use of the climate controlled seats by such people could result in serious injury.

⚠CAUTION

- **The battery could run down if the climate control seat is operated while the engine is not running.**
- **Do not use the climate control seat for extended periods or when no one is using the seat.**
- **Do not put anything on the seat which insulates heat, such as a blanket, cushion, seat cover, etc. Otherwise, the seat may become overheated.**
- **Do not place anything hard or heavy on the seat or pierce it with a pin or similar objects. This may result in damage to the climate controlled seat.**
- **Any liquid spilled on the seat should be removed immediately with a dry cloth**
- **The climate controlled seat has an air filter. Do not operate the climate controlled seat without an air filter. This may result in damage to the system.**
- **When cleaning the seat, never use gasoline, benzine, thinner, or any similar materials.**
- **If any malfunctions are found or the climate controlled seat does not operate, turn the switch off and have the system checked. It is recommended you visit an INFINITI retailer for this service.**

The climate controlled seat warms up or cools down the front seat by blowing warm or cool air from under the surface of the seat. The climate control switch is located on the center console.

The climate controlled seat can be operated as follows:

1. Start the engine.
2. Turn the control knob Ⓐ to the heat side ① or the cool side ②. The indicator light Ⓑ on the control knob will illuminate.
3. Adjust the desired amount of air using the control knob. The climate controlled seat blower remains on low speed for approximately 60 seconds after turning the switch on or selecting the desired temperature.
4. When the vehicle's interior is warmed or cooled, or before you leave the vehicle, be sure to turn the control knob to the Off (center) position. The indicator light Ⓑ on the control knob goes off with the switch in the off (center) position.

To check the air filter for the climate controlled seat, it is recommended you contact an INFINITI retailer.

HEATED STEERING WHEEL SWITCH (if so equipped)

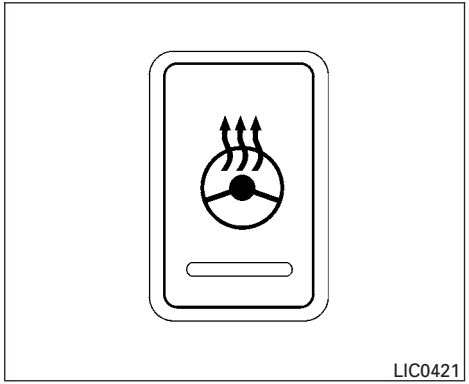

The heated steering wheel system is designed to operate only when the surface temperature of the steering wheel is below 68°F (20°C).

Push the heated steering wheel switch to warm the steering wheel after the engine starts. The indicator light will come on.

If the surface temperature of the steering wheel is below 68°F (20°C), the system will heat the steering wheel and cycle off and on to maintain a temperature above 68°F (20°C). The indicator light will remain on as long as the system is on.

Push the switch again to turn the heated steering wheel system off manually. The indicator light will go off.

NOTE:

If the surface temperature of the steering wheel is above 68°F (20°C) when the switch is turned on, the system will not heat the steering wheel. This is not a malfunction.

FRONT AND REAR SONAR SYSTEM OFF SWITCH (if so equipped)

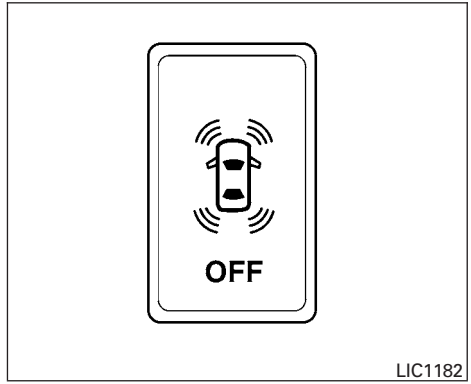

⚠ WARNING

- **The front sonar system is a convenience but it is not a substitute for proper driving.**
- **The rear sonar system is a convenience but it is not a substitute for proper backing. Always turn and check that it is safe to do so before backing up. Always back up slowly.**

The front sonar system:

- is active when the ignition switch is in the ON position and the shift lever is in a forward gear position.
- a beeping tone is emitted when the sensors detect obstacles within 1.0 m (3 ft) of the front bumper.

The rear sonar system:

- is active when the ignition is in the ON position and the shift lever is in R (Reverse).
- a beeping tone is emitted when the sensors detect obstacles within 1.8 m (5.9 ft) of the rear bumper.

The front and rear sonar system can be disabled by pushing the OFF switch. When the system is disabled, the indicator light on the switch will illuminate. Push the switch again to enable the system. The indicator light will go off.

The system will automatically reset the next time the ignition switch is turned ON.

For additional information, refer to “Front and rear sonar system” in the “Starting and driving” section of this manual.

WARNING SYSTEMS SWITCH (if so equipped)

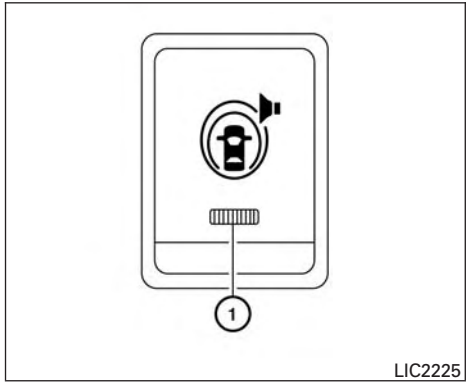

The warning systems switch is used to turn on and off the Blind Spot Warning (BSW) system that is activated using the settings menu on the vehicle information display.

When the warning systems switch is turned off, the indicator ① on the switch is off. The indicator will also be off if the warning system is deactivated using the settings menu.

The BSW system will turn on the BSW/RCTA indicator light, located next to the outside mirrors, if the radar detects a vehicle in the detection zone. If the turn signal is activated in the direction of the detected vehicle, a chime sounds twice and the BSW/RCTA indicator light will flash. For additional information, refer to “Blind Spot Warning (BSW) system” in the “Starting and driving” section of this manual.

VEHICLE DYNAMIC CONTROL (VDC) OFF SWITCH

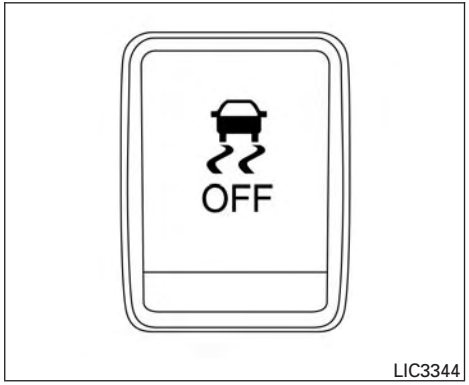

LIC3344

The vehicle should be driven with the VDC system on for most driving conditions.

If the vehicle is stuck in mud or snow, the VDC system reduces the engine output to reduce wheel spin. The engine speed will be reduced even if the accelerator is depressed to the floor. If maximum engine power is needed to free a stuck vehicle, turn the VDC system off.

To turn off the VDC system, push the VDC OFF switch. The indicator will come on.

Push the VDC OFF switch again or restart the engine to turn on the system. For additional information, refer to “Vehicle Dynamic Control (VDC) system” in the “Starting and driving” section of this manual.

POWER INVERTER SWITCH (if so equipped)

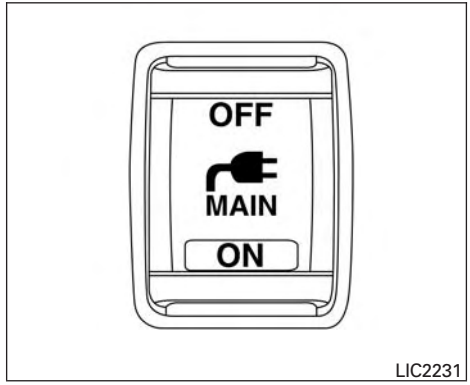

LIC2231

To use the outlets for devices that require 120v power, place the ignition in the ON position and push the power inverter switch.

The switch will illuminate when enabled.

⚠ CAUTION

- **Use power outlets with the engine running to avoid discharging the vehicle battery.**
- **Do not attempt to use this while driving.**
- **Do not use double adapters or more than one electrical accessory, doing so could significantly drain the battery of your vehicle.**

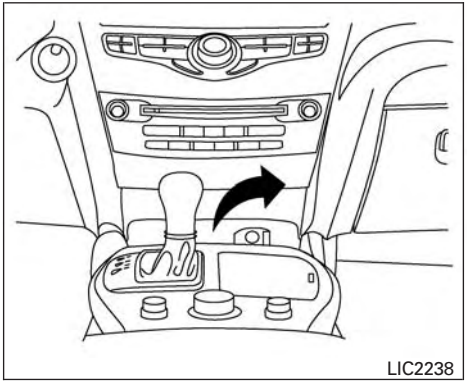

Instrument Panel

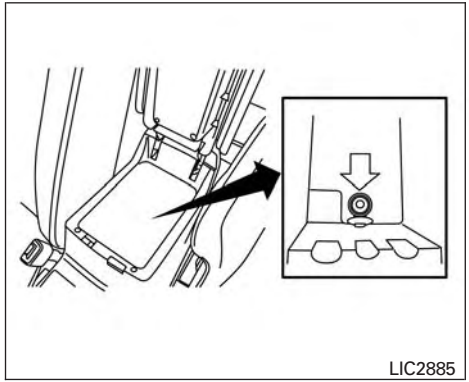

Center Console

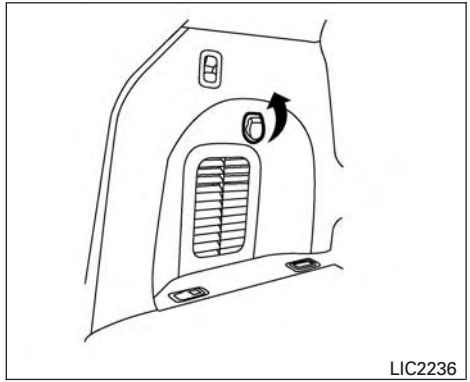

Cargo Area

12V OUTLETS

The power outlets are for powering electrical accessories such as cellular telephones. They are rated at 12 volt, 120W (10A) maximum.

The instrument panel and console power outlets are powered only when the ignition switch is in the ACC or ON position.

The power outlet in the cargo area is powered directly by the vehicle's battery.

⚠ CAUTION

- **The outlet and plug may be hot during or immediately after use.**
- **Only certain power outlets are designed for use with a cigarette lighter unit. Do not use any other power outlet for an accessory lighter. It is recommended you visit an INFINITI retailer for additional information.**
- **Do not use with accessories that exceed a 12 volt, 120W (10A) power draw.**

- **Do not use double adapters or more than one electrical accessory.**
- **Use power outlets with the engine running to avoid discharging the vehicle battery.**
- **Avoid using power outlets when the air conditioner, headlights or rear window defroster is on.**
- **Before inserting or disconnecting a plug, be sure the electrical accessory being used is turned OFF.**
- **Push the plug in as far as it will go. If good contact is not made, the plug may overheat or the internal temperature fuse may open.**
- **When not in use, be sure to close the cap. Do not allow water or any other liquid to contact the outlet.**

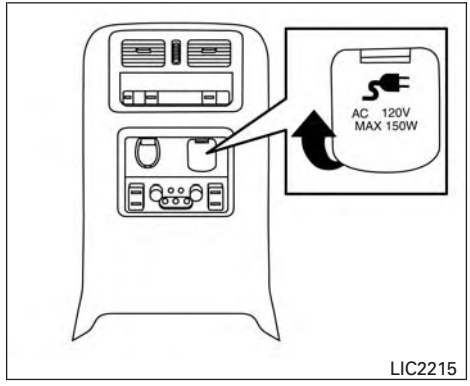

2nd Row

120V OUTLET (if so equipped)

⚠ CAUTION

- **The outlet and plug may be hot during or immediately after use.**
- **Use power outlets with the engine running to avoid discharging the vehicle battery.**
- **Do not use accessories that exceed a 120V, 150W power draw. Do not use double adaptors or more than one electrical accessory.**
- **Avoid using power outlets when the air conditioner, headlights or rear window defroster is on.**
- **Before inserting or disconnecting a plug, be sure the electrical accessory being used is turned OFF.**
- **Push the plug in as far as it will go. If good contact is not made, the plug may overheat or the internal temperature fuse may open.**
- **When not in use, be sure to close the cap. Do not allow water or any other liquid to contact the outlet.**

E-CALL (SOS) SWITCH (if so equipped)

LIC3357

The E-call (SOS) system switch is used in combination with an Infiniti Connection™ Services subscription to call for assistance in case of an emergency.

Pushing the switch will (with a paid subscription) reach a Response Specialist that will provide assistance based on the situation described by the vehicle's occupant. For additional information, or to enroll your vehicle, refer to www.InfinitiUSA.com/intouch or call 800–662–6200.

EXTENDED STORAGE SWITCH

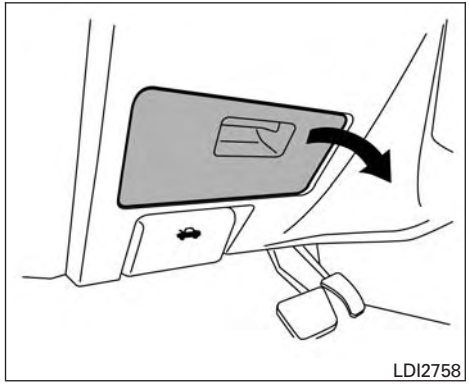
LDI2758

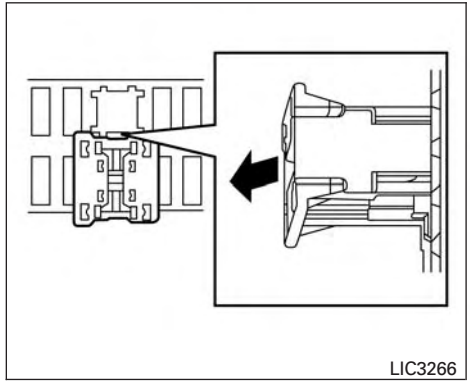
LIC3266

OFF position

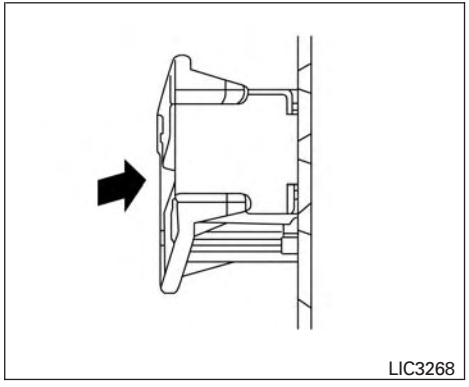

ON position

The extended storage switch is pulled out when in transit from the factory to the retailer. It is located in the fuse panel to the left of the steering wheel on the instrument panel. If any electrical equipment does not operate, ensure the extended storage switch is pushed fully in place, as shown.

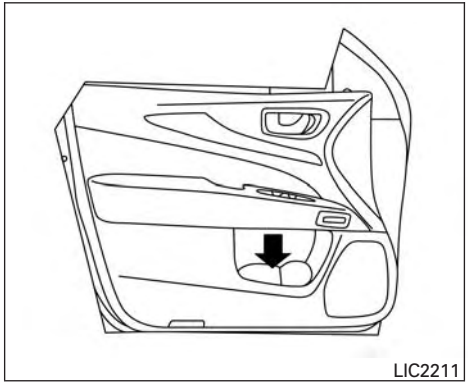

MAP POCKETS

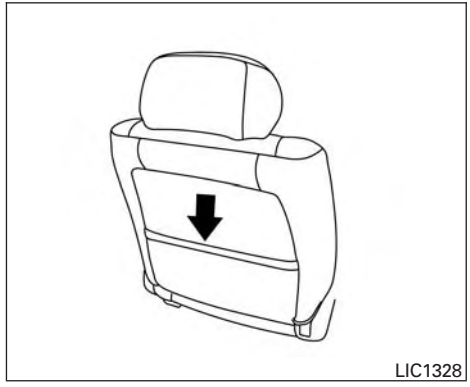

SEATBACK POCKETS

There is a seatback pocket located on the back of the driver and passenger seats. The pockets can be used to store maps.

⚠ WARNING

To ensure proper operation of the passenger's INFINITI Advanced Air Bag System, please observe the following items:

- **Do not allow a passenger in the rear seat to push or pull on the seatback pocket or head restraint/head rest.**
- **Do not place heavy loads heavier than 2.2 lbs. (1 kg) on the seatback, head restraint/head rest or in the seatback pocket.**

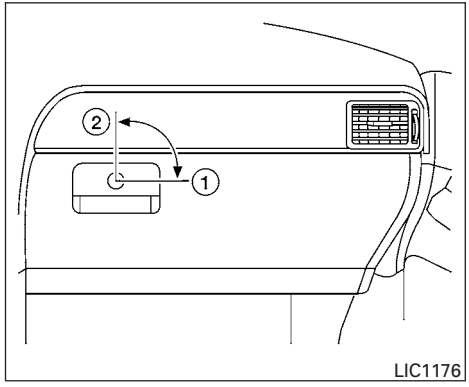

LIC1176

GLOVE BOX

Open the glove box by pulling the handle. Use the master key when locking ① or unlocking ② the glove box.

⚠ WARNING

Keep glove box lid closed while driving to help prevent injury in an accident or a sudden stop.

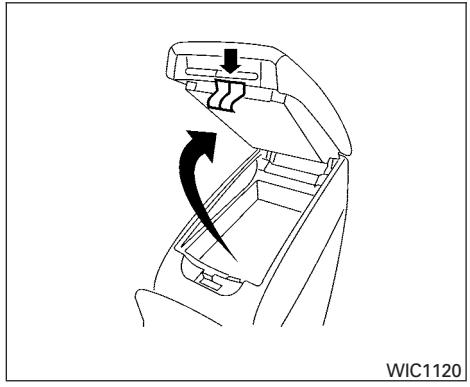
WIC1120

CONSOLE BOX

Upper half

Pull up on the driver's side latch to open the upper half of the console box.

The upper half of the console box may be used for storage of cellular phones. An access hole is provided at the front of the upper half of the console box for a phone or iPod® cord routing to the power outlet.

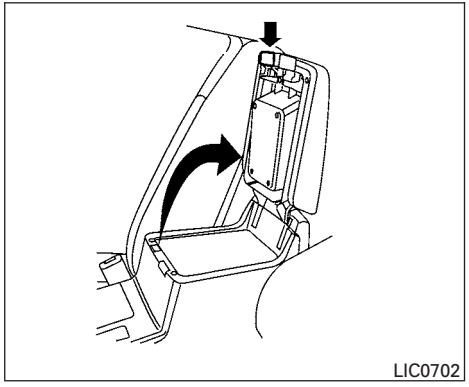

Lower half

Pull up on the passenger's side latch to open the lower half of the console box. A power outlet is located inside the console box and there is storage for compact discs.

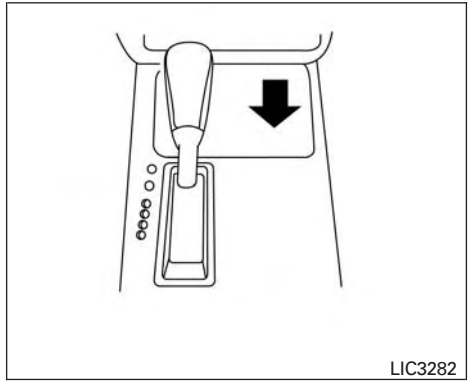

Front console

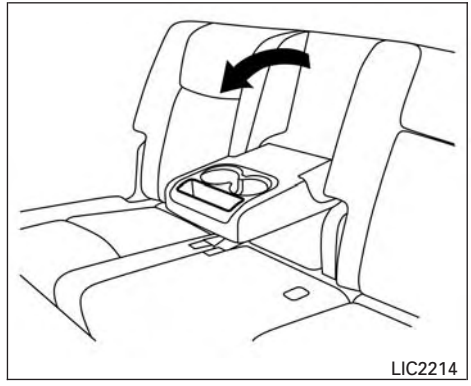

Rear armrest

STORAGE TRAYS

⚠ WARNING

Do not place sharp objects in the trays to help prevent injury in an accident or sudden stop.

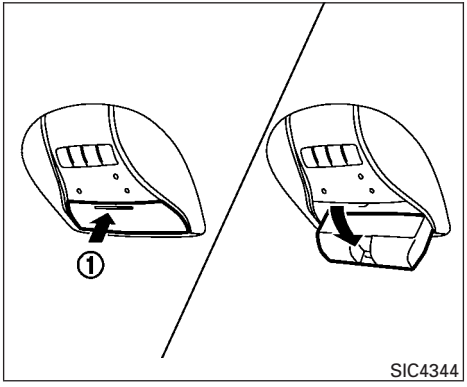

SUNGLASSES HOLDER

To open the sunglasses holder, push ① and release.

Only store one pair of sunglasses in the holder.

⚠ WARNING

Keep the sunglasses holder closed while driving to avoid obstructing the driver's view and to help prevent an accident.

⚠ CAUTION

- **Do not use for anything other than sunglasses.**
- **Do not leave sunglasses in the sunglasses holder while parking in direct sunlight. The heat may damage the sunglasses.**

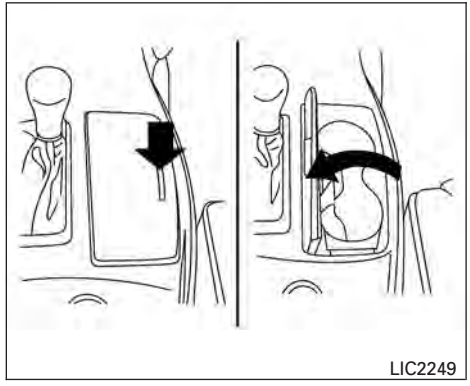

Front console

CUP HOLDERS

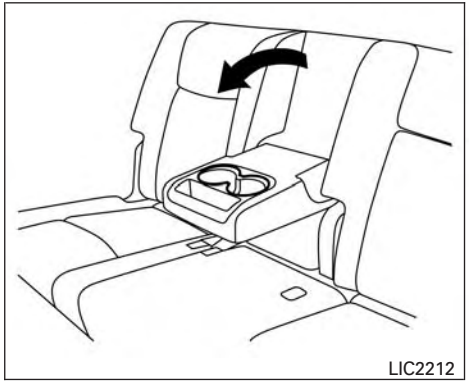

2nd row

⚠ CAUTION

Do not recline the 2nd row seatback when you use the cup holders on the rear armrest. Doing so may cause the beverages to spill over, and if they are hot, they may scald the passengers.

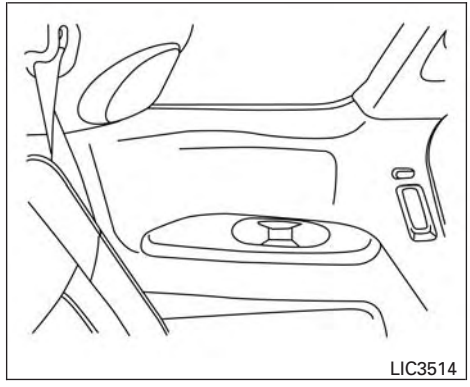

3rd row

⚠ CAUTION

- **Avoid abrupt starting and braking when the cup holder is being used to prevent spilling the drink. If the liquid is hot, it can scald you or your passenger.**
- **Use only soft cups in the cup holder. Hard objects can injure you in an accident.**

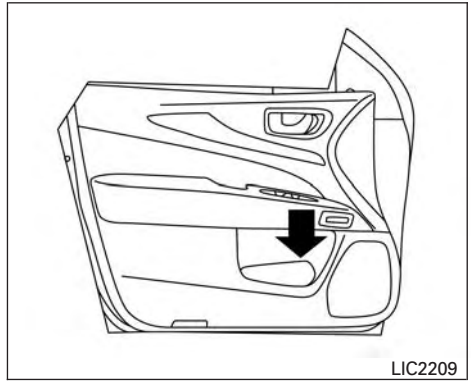

Bottle holder — front

⚠ CAUTION

- **Do not use bottle holder for any other objects that could be thrown about in the vehicle and possibly injure people during sudden braking or an accident.**
- **Do not use bottle holder for open liquid containers.**

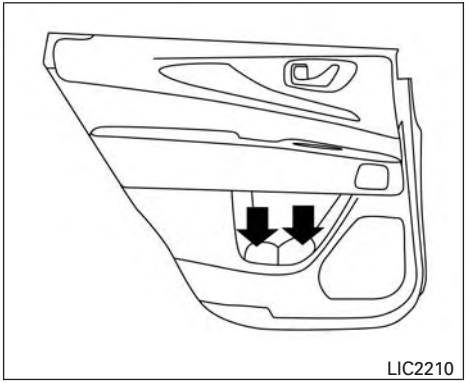

Bottle holder — rear

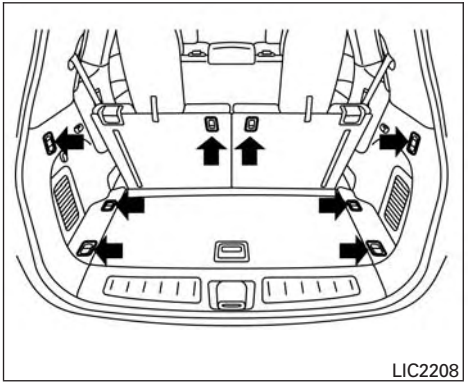

LUGGAGE HOOKS

When securing items using luggage hooks located on the back of the seat or side finisher do not apply a load over more than 6.5 lbs (29 N) to a single hook.

The luggage hooks that are located on the floor should have loads less than 110 lbs (490 N) to a single hook.

The luggage hooks can be used to secure cargo with ropes or other types of straps.

⚠ WARNING

- **Properly secure all cargo with ropes or straps to help prevent it from sliding or shifting. Do not place cargo higher than the seatbacks. In a sudden stop or collision, unsecured cargo could cause personal injury.**
- **Use suitable ropes and hooks to secure cargo.**
- **Never allow anyone to ride in the luggage area. It is extremely dangerous to ride in a cargo area inside of a vehicle. In a collision, people riding in these areas are more likely to be seriously injured or killed.**
- **Do not allow people to ride in any area of your vehicle that is not equipped with seats and seat belts.**
- **The child restraint top tether strap may be damaged by contact with items in the cargo area. Secure any items in the cargo area. Your child could be seriously injured or killed in a collision if the top tether strap is damaged.**
- **Be sure everyone in your vehicle is in a seat and using a seat belt properly.**

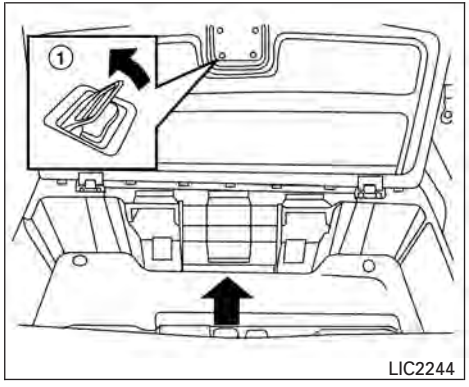

Type A (if so equipped)

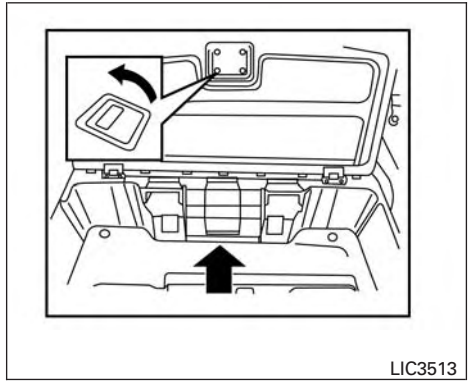

Type B (if so equipped)

CARGO AREA STORAGE BIN

To access the floor storage area (type A), push down ① to raise the handle, then pull up on the handle to lift the luggage board.

To access the floor storage area (type B), raise the handle.

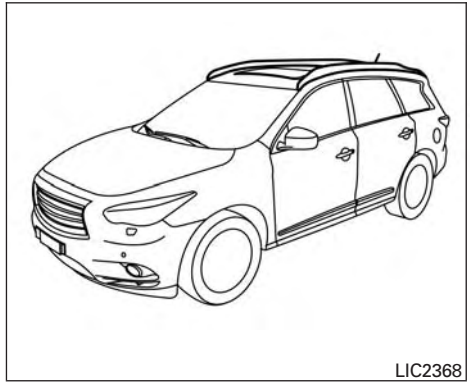

ROOF RACK (if so equipped)

Genuine NISSAN accessory cross bars are available through an INFINITI retailer. It is recommended you visit an INFINITI retailer for crossbar or other equipment information.

Always distribute the luggage evenly on the cross bars (if so equipped). Do not load more than 68 kg (150 lb) on the cross bars (if so equipped). Observe the maximum load limit shown on the cross bars (if so equipped) or roof carriers when you attach them on the roof cross bars (if so equipped). It is recommended you visit an INFINITI retailer for cross bar or other equipment information.

Do not apply any load directly to the roof side rails. Cross bars (if so equipped) must be installed before applying load/cargo/luggage to the roof of the vehicle.

Be careful that your vehicle does not exceed the Gross Vehicle Weight Rating (GVWR) or its Gross Axle Weight Rating (GAWR front and rear). The GVWR and GAWR are located on the F.M.V.S.S. or C.V.M.S.S. certification label (located on the driver's door pillar). For additional information, refer to "Vehicle loading information" in the "Technical and consumer information" section of this manual.

WARNING

- **Drive extra carefully when the vehicle is loaded at or near the cargo carrying capacity, especially if the significant portion of that load is carried on the cross bars (if so equipped).**
- **Heavy loading of the cross bars (if so equipped) has the potential to affect the vehicle stability and handling during sudden or unusual handling maneuvers.**
- **Roof rack cross bars (if so equipped) should be evenly distributed.**
- **Do not exceed maximum roof rack cross bars (if so equipped) load.**
- **Properly secure all cargo with ropes or straps to help prevent it from sliding or shifting. In a sudden stop or collision, unsecured cargo could cause personal injury.**

CAUTION

Always install the cross bars (if so equipped) onto the roof side rails before loading cargo of any kind. Loading cargo directly onto the roof side rails or the vehicle's roof may cause vehicle damage.

POWER WINDOWS

WARNING

- **Make sure that all passengers have their hands, etc. inside the vehicle while it is in motion and before closing the windows. Use the window lock switch to prevent unexpected use of the power windows.**
- **To help avoid risk of injury or death through unintended operation of the vehicle and or its systems, including entrapment in windows or inadvertent door lock activation, do not leave children, people who require the assistance of others or pets unattended in your vehicle. Additionally, the temperature inside a closed vehicle on a warm day can quickly become high enough to cause a significant risk of injury or death to people and pets.**

The power windows operate when the ignition switch is placed in the ON position, or for a period of time after the ignition switch is placed in the OFF position. If the driver's or passenger's door is opened during this period of time, the power to the windows is canceled.

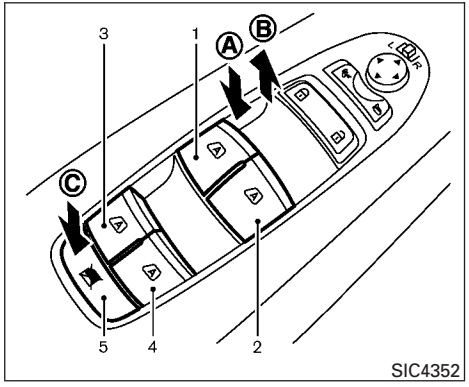

1. Driver side automatic switch
2. Front passenger side automatic switch
3. Left rear passenger automatic switch
4. Right rear passenger automatic switch
5. Window lock button

Driver's side power window switch

The driver's side control panel is equipped with switches to open or close the front and rear passenger windows.

The window can be partially opened by pushing the switch Ⓐ down lightly until the desired window position is reached. To close the window partially, pull the switch Ⓑ up until the desired window position is reached.

Locking passengers' windows

When the window lock button Ⓒ is depressed, only the driver's side window can be opened or closed. Push it again to cancel the window lock function.

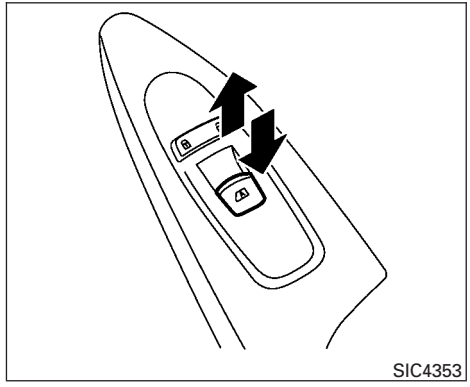

Front passenger's power window switch

The passenger's window switch operates only the corresponding passenger's window. To open the window partially, push the switch down lightly until the desired window position is reached. To close the window partially, pull the switch up until the desired window position is reached.

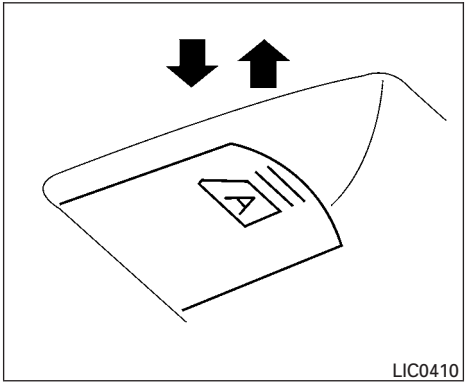

Rear power window switch

The rear power window switches open or close only the corresponding windows. To partially open the window, push the switch down lightly until the desired window position is reached. To partially close the window, pull the switch up lightly until the desired window position is reached.

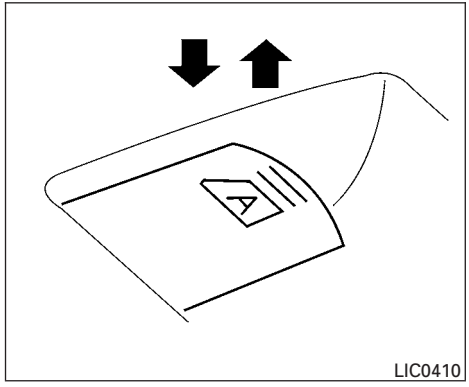

Automatic operation

To fully open a window equipped with automatic operation, push the window switch down to the second detent and release it; it need not be held. The window automatically opens all the way. To stop the window, lift the switch up while the window is opening.

To fully close a window equipped with automatic operation, pull the switch up to the second detent and release it; it need not be held. To stop the window, push the switch down while the window is closing.

Auto-reverse function

The auto-reverse function can be activated when a window is closed by automatic operation.

Depending on the environment or driving conditions, the auto-reverse function may be activated if an impact or load similar to something being caught in the window occurs.

⚠ WARNING

There are some small distances immediately before the closed position which cannot be detected. Make sure that all passengers have their hands, etc., inside the vehicle before closing the window.

If the vehicle's battery is disconnected, replaced, or jump started, the power window auto-reverse function may not operate properly. If this occurs, it is recommended you visit an INFINITI retailer to re-initialize the power window auto-reverse system.

If the control unit detects something caught in a window equipped with automatic operation as it is closing, the window will be immediately lowered.

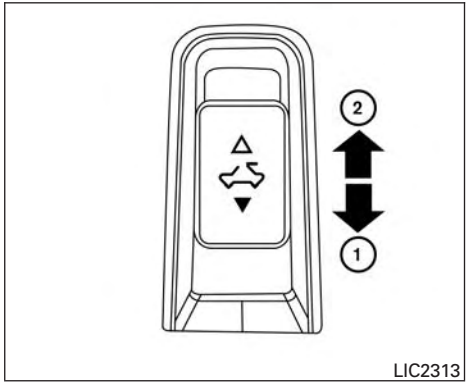

POWER MOONROOF

The moonroof will only operate when the ignition switch is placed in the ON position. The power moonroof is operational for a period of time, even if the ignition switch is placed in the ACC or OFF position. If the driver's door or the front passenger's door is opened during this period of time, the power to the moonroof is canceled.

Sliding the moonroof

To fully open or close the moonroof, push the switch to the open ② or close ① position and release it; it need not be held. The roof will automatically open or close all the way. To stop the roof, push the switch once more while it is opening or closing.

Tilting the moonroof

To tilt up, first close the moonroof, then push the switch to the tilt up position ① and release it; it need not be held. To tilt down the moonroof, push the switch to the tilt down position ②.

Resetting the moonroof switch

If the moonroof does not operate properly, perform the following procedure to initialize the moonroof operation system.

1. Turn ignition switch ON.
2. Press and hold the moonroof tilt switch forward until the moonroof stops.
3. Release the moonroof switch.
4. Press and hold the tilt up switch within 6 seconds.
5. The roof glass will Tilt-Down, Slide-Close, Slide-Open, Slide-Close, Tilt-Up, Tilt-Down.
6. Release the switch; initialization is complete if the moonroof operates normally.

If the moonroof does not operate properly after performing the procedure above, have your vehicle checked. It is recommended you visit an INFINITI retailer for this service.

Auto-reverse function (when closing or tilting down the moonroof)

The auto-reverse function can be activated when the moonroof is closed or tilted down by automatic operation when the ignition switch is placed in the ON position or for a period of time after the ignition switch is placed in the OFF position.

Depending on the environment or driving conditions, the auto-reverse function may be activated if an impact or load similar to something being caught in the moonroof occurs.

⚠ WARNING

There are some small distances immediately before the closed position which cannot be detected. Make sure that all passengers have their hands, etc., inside the vehicle before closing the moonroof.

When closing

If the control unit detects something caught in the moonroof as it moves to the front, the moonroof will immediately open backward.

When tilting down

If the control unit detects something caught in the moonroof as it tilts down, the moonroof will immediately tilt up.

If the auto-reverse function malfunctions and repeats opening or tilting up the moonroof, keep pushing the tilt down switch within 5 seconds after it happens; the moonroof will fully close gradually. Make sure nothing is caught in the moonroof.

WARNING

- **In an accident you could be thrown from the vehicle through an open moonroof. Always use seat belts and child restraints.**
- **Do not allow anyone to stand up or extend any portion of their body out of the moonroof opening while the vehicle is in motion or while the moonroof is closing.**

CAUTION

- **Remove water drops, snow, ice or sand from the moonroof before opening.**
- **Do not place heavy objects on the moonroof or surrounding area.**

Sunshade

Open and close the sunshade by sliding it forward or backward.

If the moonroof does not close

Have your moonroof checked and repaired. It is recommended you visit an INFINITI retailer for this service.

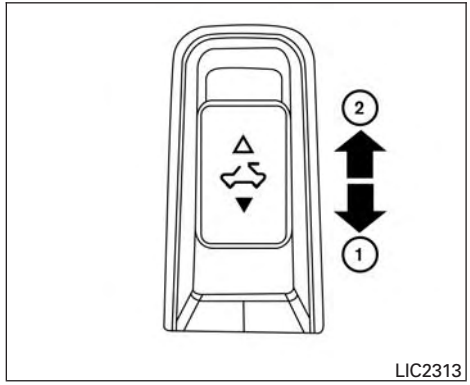

POWER MOONROOF

The front moonroof is a power moonroof, the rear moonroof is fixed glass. The power moonroof will only operate when the ignition switch is placed in the ON position. The moonroof is operational for a period of time, even if the ignition switch is placed in the ACC or OFF position. If the driver's door or the front passenger's door is opened during this period of time, the power to the moonroof is canceled.

Sliding the moonroof

To slide the moonroof:

- To fully open the moonroof, push the switch ① toward the open position until it reaches the second detent. If the switch ① is pushed to the first detent, only the sunshade will open.
- To fully close the moonroof, push the switch ② toward the close position until it reaches the second detent. If the switch ② is pushed to the first detent, the moonroof will close but the sunshade will remain open.
- To open or close the moonroof part way, release the switch ① or ② while the moonroof is sliding open or closed. The moonroof will stop at the desired position.

Tilting the moonroof

To tilt up, first close the moonroof, then push the switch to the tilt up position ① and release it; it need not be held. To tilt down the moonroof, push the switch to the tilt down position ②.

Auto-reverse function (when closing or tilting down the moonroof)

The auto-reverse function can be activated when the moonroof is closed or tilted down by automatic operation when the ignition switch is placed in the ON position or for a period of time after the ignition switch is placed in the OFF position.

Depending on the environment or driving conditions, the auto-reverse function may be activated if an impact or load similar to something being caught in the moonroof occurs.

⚠ WARNING

There are some small distances immediately before the closed position which cannot be detected. Make sure that all passengers have their hands, etc., inside the vehicle before closing the moonroof.

When closing

If the control unit detects something caught in the moonroof as it moves to the front, the moonroof will immediately open backward.

When tilting down

If the control unit detects something caught in the moonroof as it tilts down, the moonroof will immediately tilt up.

If the auto-reverse function malfunctions and repeats opening or tilting up the moonroof, keep pushing the tilt down switch within 5 seconds after it happens; the moonroof will fully close gradually. Make sure nothing is caught in the moonroof.

⚠ WARNING

- **In an accident you could be thrown from the vehicle through an open moonroof. Always use seat belts and child restraints.**
- **Do not allow anyone to stand up or extend any portion of their body out of the moonroof opening while the vehicle is in motion or while the moonroof is closing.**

⚠ CAUTION

- **Remove water drops, snow, ice or sand from the moonroof before opening.**
- **Do not place heavy objects on the moonroof or surrounding area.**

If the moonroof does not close

Have your moonroof checked and repaired. It is recommended you visit an INFINITI retailer for this service.

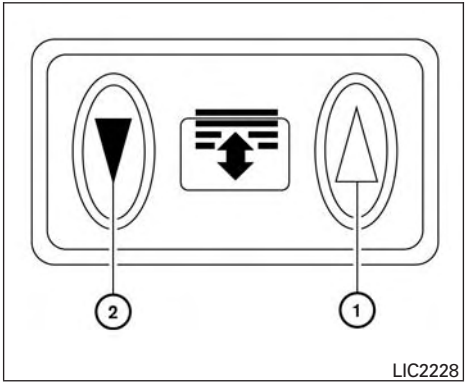

Panoramic sunshade

The panoramic sunshade operates when the ignition switch is in the ON position. The sunshade switch is located near the roof console. When opening or closing the sunshade the switch need not be held.

To open the sunshade:

- To fully open the sunshade, push the switch ① toward the open position.

To close the sunshade:

- To fully close the sunshade, push the switch ② toward the close position.

⚠ WARNING

- **To avoid personal injury, keep your hands, fingers and head away from the sunshade arm, the arm rail and sunshade inlet port.**
- **Do not allow children near the rear sunshade system. They could be injured.**
- **Do not place objects on or near the rear sunshade. This could cause improper operation or damage it.**
- **Do not pull or push the rear sunshade. This could cause improper operation or damage it.**

⚠ CAUTION

- **Do not place objects (such as newspapers, handkerchiefs, etc.) on the sunshade inlet port. Doing so may entangle these objects in the sunshade when it is extending or retracting, causing improper operation or damage to the sunshade.**
- **Do not push the sunshade arm with your hands, etc., as this may deform it. Improper operation or damage to the sunshade may result.**
- **Do not put any object into the sunshade inlet port as this may result in improper operation or damage the sunshade.**
- **Do not hang any object on the arm rail as this may result in improper operation or damage the sunshade.**
- **Do not forcefully pull the sunshade. Doing so may elongate the sunshade. Improper operation or damage to the sunshade may result.**

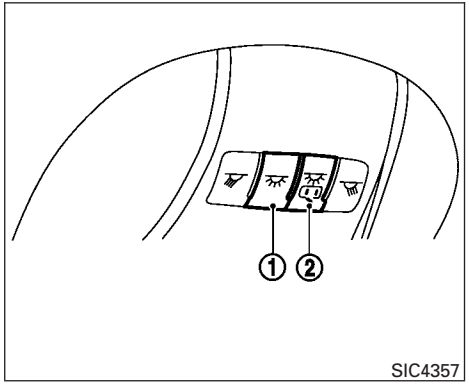

SIC4357

When the ON switch ① is pressed, the footwell lights, step lights, map lights and rear personal lights will automatically turn on and stay on for a period of time when:

- The doors are unlocked by the Intelligent Key, a key or the request switch while all doors are closed and the ignition switch is in the OFF position.
- The driver's door is opened and then closed while the key is removed from the ignition switch.
- When individually pushed.

When the OFF switch ② is pushed, the interior lights do not illuminate even when pushed.

NOTE:

The footwell lights and step lights illuminate when the driver and passenger doors are open regardless of the interior light switch position. These lights will turn off automatically after a period of time while doors are open to prevent the battery from becoming discharged.

⚠ CAUTION

Do not use for extended periods of time with the engine stopped. This could result in a discharged battery.

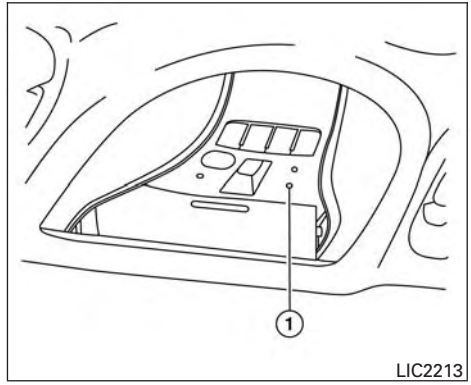

LIC2213

CONSOLE LIGHT (if so equipped)

The console light ① will turn on whenever the parking lights or headlights are illuminated.

The console light brightness can be adjusted with the illumination brightness control in the vehicle information display.

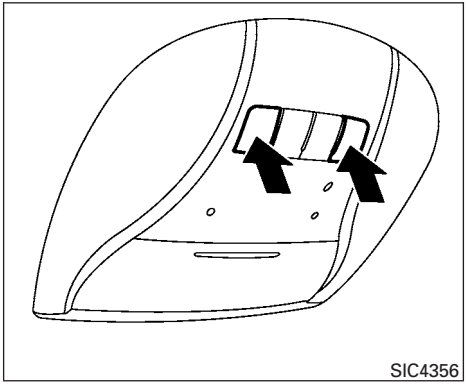

MAP LIGHTS

To turn the map lights on, push the switches. To turn them off, push the switches again.

⚠ CAUTION

Do not use for extended periods of time with the engine stopped. This could result in a discharged battery.

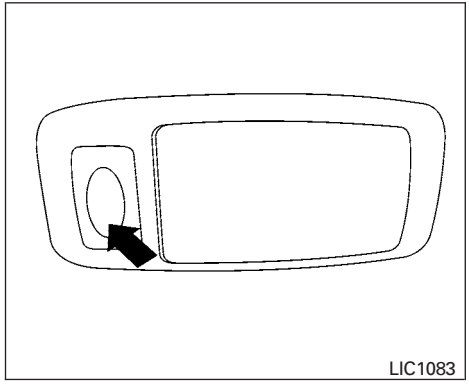

Rear personal lights

PERSONAL LIGHTS

To turn the rear personal lights on, push the switch. To turn them off, push the switch again.

LUGGAGE COMPARTMENT LIGHT

The light illuminates when the rear hatch is opened. When the rear hatch is closed, the light will turn off.

The light also illuminates with other interior lights when the interior light switch is in the DOOR position. For additional information, refer to “Interior lights” in this section.

The lights will turn off automatically after a period of time while doors are open to prevent the battery from becoming discharged.

HOMELINK® UNIVERSAL TRANSCEIVER (if so equipped)

The HomeLink® Universal Transceiver provides a convenient way to consolidate the functions of up to three individual hand-held transmitters into one built-in device.

HomeLink® Universal Transceiver:

- Will operate most radio frequency devices such as garage doors, gates, home and office lighting, entry door locks and security systems.
- Is powered by your vehicle's battery. No separate batteries are required. If the vehicle's battery is discharged or is disconnected, HomeLink® will retain all programming.

When the HomeLink® Universal Transceiver is programmed, retain the original transmitter for future programming procedures (Example: new vehicle purchases). Upon sale of the vehicle, the programmed HomeLink® Universal Transceiver buttons should be erased for security purposes. For additional information, refer to "Programming HomeLink®" in this section.

⚠ WARNING

- **Do not use the HomeLink® Universal Transceiver with any garage door opener that lacks safety stop and reverse features as required by federal safety standards. (These standards became effective for opener models manufactured after April 1, 1982). A garage door opener which cannot detect an object in the path of a closing garage door and then automatically stop and reverse, does not meet current federal safety standards. Using a garage door opener without these features increases the risk of serious injury or death.**
- **During the programming procedure your garage door or security gate will open and close (if the transmitter is within range). Make sure that people or objects are clear of the garage door, gate, etc. that you are programming.**
- **Your vehicle's engine should be turned off while programming the HomeLink® Universal Transceiver. Do not breathe exhaust gases; they contain colorless and odorless carbon monoxide. Carbon monoxide is dangerous. It can cause unconsciousness or death.**

PROGRAMMING HOMELINK®

If you have any questions or are having difficulty programming your HomeLink® buttons, refer to the HomeLink® web site at: www.homelink.com or call 1-800-355-3515.

NOTE:

Place the ignition switch in the ACC position when programming HomeLink®. It is also recommended that a new battery be placed in the hand-held transmitter of the device being programmed to HomeLink® for quicker programming and accurate transmission of the radio frequency.

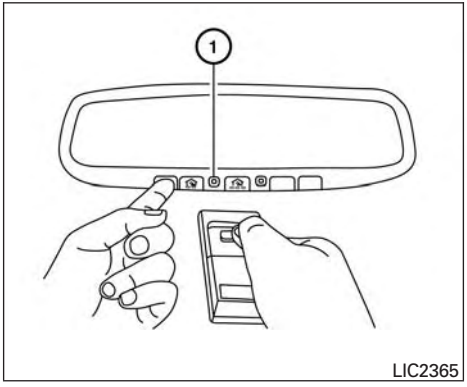

1. Position the end of your hand-held transmitter 1–3 in (2–8 cm) away from the HomeLink® surface, keeping the HomeLink® indicator light ① in view.

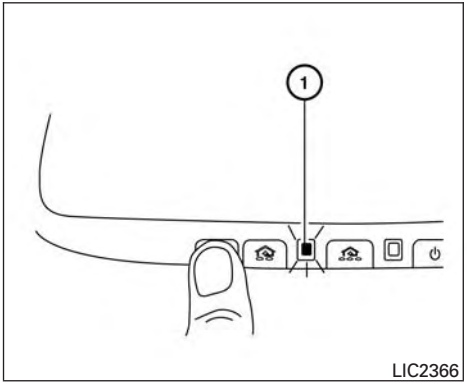

2. Using both hands, simultaneously press and hold the desired HomeLink® button and hand-held transmitter button. DO NOT release until the HomeLink® indicator light ① flashes slowly and then rapidly. When the indicator light flashes rapidly, both buttons may be released. (The rapid flashing indicates successful programming.)

NOTE:

Some devices may require you to replace Step 2 with the cycling procedure noted in "Programming HomeLink® for Canadian customers and gate openers" in this section.

3. Press and hold the programmed HomeLink® button and observe the indicator light.
   - If the indicator light ① **is solid/continuous, programming is complete** and your device should activate when the HomeLink® button is pressed and released.
   - If the indicator light ① blinks **rapidly for 2 seconds and then turns to a solid/continuous light, continue with Steps 4-6** for a rolling code device. A second person may make the following steps easier. Use a ladder or other device. Do not stand on your vehicle to perform the next steps.
4. At the receiver located on the garage door opener motor in the garage, locate the "learn" or "smart" button (the name and color of the button may vary by manufacturer but it is usually located near where the hanging antenna wire is attached to the unit). If there is difficulty locating the button, reference the garage door opener's manual.
5. Press and release the "learn" or "smart" button.

6. Return to the vehicle and firmly press and hold the trained HomeLink® button for 2 seconds and release. Repeat the “press/hold/release” sequence up to three times to complete the training process. HomeLink® should now activate your rolling code equipped device.
7. If you have any questions or are having difficulty programming your HomeLink® buttons, refer to the HomeLink® web site at: www.homelink.com or call 1-800-355-3515.

PROGRAMMING HOMELINK® FOR CANADIAN CUSTOMERS AND GATE OPENERS

Canadian radio-frequency laws require transmitter signals to “time-out” (or quit) after several seconds of transmission – which may not be long enough for HomeLink® to pick up the signal during training. Similar to this Canadian law, some U.S. gate operators are designed to “time-out” in the same manner.

If you live in Canada or you are having difficulties training a gate operator **or** garage door opener by using the “Training” procedures, **replace** “Programming HomeLink®” **Step 2** with the following:

NOTE:

When programming a garage door opener, etc., unplug the device during the “cycling” process to prevent possible damage to the garage door opener components.

1. For additional information, refer to “Programming HomeLink®” step 1 in this section.
2. Using both hands, simultaneously press and hold the desired HomeLink® button and the hand-held transmitter button. During training, your hand-held transmitter may automatically stop transmitting. Continue to press and hold the desired HomeLink® button while you press and re-press (“cycle”) your hand-held transmitter every 2 seconds until the frequency signal has been learned. The HomeLink® indicator light will flash slowly and then rapidly after several seconds upon successful training. DO NOT release until the HomeLink® indicator light flashes slowly and then rapidly. When the indicator light flashes rapidly, both buttons may be released. The rapid flashing indicates successful training.
   Proceed with “Programming HomeLink®” step 3 to complete.
   If the device was unplugged during the programming procedure, remember to plug it back in when programming is completed.

OPERATING THE HOMELINK® UNIVERSAL TRANSCEIVER

The HomeLink® Universal Transceiver, after it is programmed, can be used to activate the programmed device. To operate, simply press and release the appropriate programmed HomeLink® Universal Transceiver button. The amber indicator light will illuminate while the signal is being transmitted.

For convenience, the hand-held transmitter of the device may also be used at any time.

PROGRAMMING TROUBLE-DIAGNOSIS

If the HomeLink® does not quickly learn the hand-held transmitter information:

- replace the hand-held transmitter batteries with new batteries.
- position the hand-held transmitter with its battery area facing away from the HomeLink® surface.
- press and hold both the HomeLink® and hand-held transmitter buttons without interruption.

- position the hand-held transmitter 1 - 3 in (2 - 8 cm) away from the HomeLink® surface. Hold the transmitter in that position for up to 15 seconds. If HomeLink® is not programmed within that time, try holding the transmitter in another position – keeping the indicator light in view at all times.

If you continue to have programming difficulties, please contact the INFINITI Consumer Affairs Department. The phone numbers are located in the Foreword of this manual.

CLEARING THE PROGRAMMED INFORMATION

The following procedure clears the programmed information from both buttons. Individual buttons cannot be cleared. However, individual buttons can be reprogrammed. For additional information, refer to "Reprogramming a single HomeLink® button" in this section.

To clear all programming:

1. Press and hold the two outer HomeLink® buttons until the indicator light begins to flash in approximately 10 seconds. Do not hold for longer than 20 seconds.
2. Release both buttons.

HomeLink® is now in the programming mode and can be programmed at any time beginning with "Programming HomeLink®" - Step 1.

REPROGRAMMING A SINGLE HOMELINK® BUTTON

To reprogram a HomeLink® Universal Transceiver button, complete the following:

1. Press and hold the desired HomeLink® button. **DO NOT** release the button.
2. The indicator light will begin to flash after 20 seconds. Without releasing the HomeLink® button, proceed with "Programming HomeLink®" - Step 1.

For questions or comments, contact HomeLink® at: www.homelink.com or 1–800–355–3515 (except Mexico).

The HomeLink® Universal Transceiver button has now been reprogrammed. The new device can be activated by pushing the HomeLink® button that was just programmed. This procedure will not affect any other programmed HomeLink® buttons.

IF YOUR VEHICLE IS STOLEN

If your vehicle is stolen, you should change the codes of any non-rolling code device that has been programmed into HomeLink®. Consult the Owner's Manual of each device or call the manufacturer or dealer of those devices for additional information.

When your vehicle is recovered, you will need to reprogram the HomeLink® Universal Transceiver with your new transmitter information.

FCC Notice:

For USA:

This device complies with Part 15 of the FCC Rules. Operation is subject to the following two conditions: (1) This device may not cause interference, and (2) this device must accept any interference received, including interference that may cause undesired operation.

NOTE:

Changes or modifications not expressly approved by the party responsible for compliance could void the user's authority to operate the equipment.

For Canada:

This device complies with Industry Canada licence-exempt RSS standard(s). Operation is subject to the following two conditions: (1) this device may not cause interference, and (2) this device must accept any interference, including interference that may cause undesired operation of the device.

MEMO

3 Pre-driving checks and adjustments

Keys 3-2
INFINITI Intelligent Key 3-2
INFINITI Vehicle Immobilizer System keys. 3-4
Doors 3-4
Locking with key. 3-5
Locking with inside lock knob 3-5
Locking with power door lock switch 3-6
Automatic door locks 3-6
Child safety rear door lock. 3-6
INFINITI Intelligent Key System. 3-7
Operating range. 3-8
Door locks/unlocks precaution 3-9
INFINITI Intelligent Key Operation 3-10
How to use the remote keyless entry function 3-13
Warning signals 3-16
Troubleshooting guide 3-17
Remote Engine Start (if so equipped). 3-19
Remote engine start operating range 3-19
Remote starting the vehicle 3-19
Extending engine run time 3-20
Canceling a remote start 3-20
Conditions the remote start will not work 3-20
Hood 3-21
Liftgate. 3-22
Operating the power liftgate 3-22
Power liftgate main switch. 3-25
Liftgate release lever. 3-26
Liftgate position setting 3-26
Fuel-filler door 3-27
Opening the fuel-filler door 3-27
Fuel-filler cap 3-27
Steering wheel 3-29
Tilt and telescopic operation 3-30
Sun visors 3-31
Vanity mirrors 3-31
Mirrors 3-32
Automatic anti-glare rearview mirror 3-32
Outside mirrors 3-32
Automatic drive positioner (if so equipped) 3-34
Memory storage function 3-34
Entry/exit function 3-35
Setting memory function. 3-36
System operation. 3-36

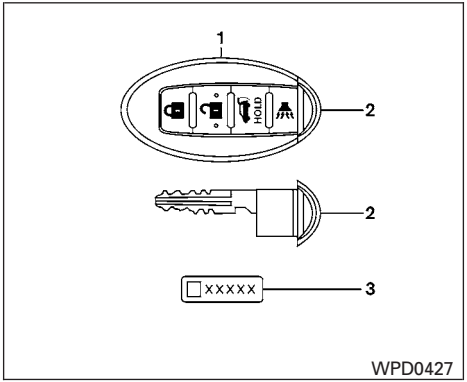

Type A (if so equipped)

1. Intelligent Keys (two sets)
2. Mechanical key
3. Key number plate (one plate)

INFINITI INTELLIGENT KEY

Your vehicle can only be driven with the Intelligent Keys which are registered to your vehicle's Intelligent Key System components and INFINITI Vehicle Immobilizer System components.

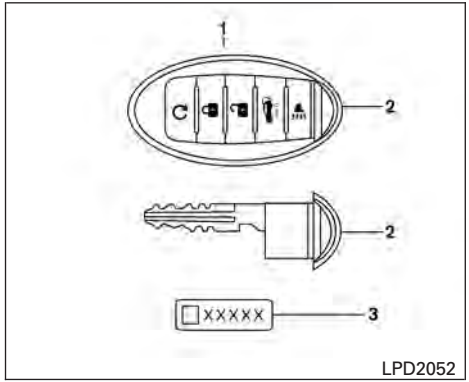

Type B (if so equipped)

Never leave the keys in the vehicle.

As many as four Intelligent Keys can be registered and used with one vehicle. The new keys must be registered prior to use with the Intelligent Key System and INFINITI Vehicle Immobilizer System of your vehicle. It is recommended that you visit an INFINITI retailer for this service. Since the registration process requires erasing all memory in the Intelligent Key components when registering new keys, be sure to take all Intelligent Keys that you have to the INFINITI retailer.

A key number plate is supplied with your keys. Record the key number and keep it in a safe place (such as your wallet), not in the vehicle. If you lose your keys, it is recommended that you visit an INFINITI retailer for duplicates by using the key number. INFINITI does not record key numbers so it is very important to keep track of your key number plate.

A key number is only necessary when you have lost all keys and do not have one to duplicate from. If you still have a key, it can be duplicated without knowing the key number.

⚠ CAUTION

Listed below are conditions or occurrences which will damage the Intelligent Key:

- **Do not allow the Intelligent Key, which contains electrical components, to come into contact with water or salt water. This could affect the system function.**
- **Do not drop the Intelligent Key.**
- **Do not strike the Intelligent Key sharply against another object.**
- **Do not change or modify the Intelligent Key.**

- **Wetting may damage the Intelligent Key. If the Intelligent Key gets wet, immediately wipe until it is completely dry.**
- **Do not place the Intelligent Key for an extended period in an area where temperatures exceed 140°F (60°C).**
- **Do not attach the Intelligent Key with a key holder that contains a magnet.**
- **Do not place the Intelligent Key near equipment that produces a magnetic field, such as a TV, audio equipment and personal computers.**

If an Intelligent Key is lost or stolen, INFINITI recommends erasing the ID code of that Intelligent Key from the vehicle. This may prevent the unauthorized use of the Intelligent Key to operate the vehicle. For information regarding the erasing procedure, it is recommended that you visit an INFINITI retailer.

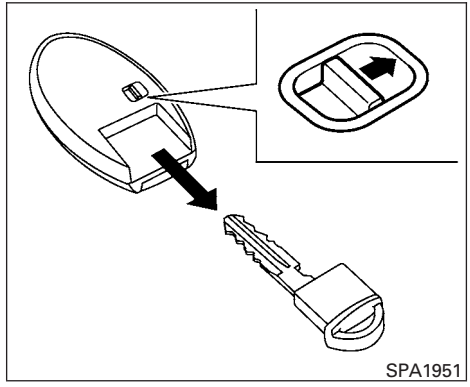
SPA1951

Mechanical key

The Intelligent Key contains the mechanical key.

To remove the mechanical key, release the lock knob on the back of the Intelligent Key.

To install the mechanical key, firmly insert it into the Intelligent Key until the lock knob returns to the lock position.

Use the mechanical key to lock or unlock the driver's door and glove box.

⚠ CAUTION

Always carry the mechanical key installed in the Intelligent Key slot.

For additional information, refer to "Doors" in this section and "Storage" in the "Instruments and controls" section of this manual.

Valet hand-off

When you have to leave a key with a valet, give them the Intelligent Key itself and keep the mechanical key with you to protect your belongings.

To prevent the glove box from being opened during valet hand-off, follow the procedure below.

1. Remove the mechanical key from the Intelligent Key.
2. Lock the glove box with the mechanical key.
3. Hand the Intelligent Key to the valet and keep the mechanical key with you.

For additional information, refer to "Storage" in the "Instruments and controls" section of this manual.

INFINITI VEHICLE IMMOBILIZER SYSTEM KEYS

You can only drive your vehicle using the Intelligent Keys which are registered to the INFINITI Vehicle Immobilizer System components in your vehicle.

The mechanical key can be used for all the locks.

Never leave the keys in the vehicle.

Additional or replacement keys:

If you still have a key, the key number is not necessary when you need extra INFINITI Vehicle Immobilizer System keys. Your existing key can be duplicated without knowing the key number. As many as four INFINITI Vehicle Immobilizer System keys can be used with one vehicle. You should bring all INFINITI Vehicle Immobilizer System keys that you have to the INFINITI retailer for registration. This is because the registration process will erase the memory of all key codes previously registered into the INFINITI Vehicle Immobilizer System. After the registration process, these components will only recognize keys coded into the INFINITI Vehicle Immobilizer System during registration. Any key that is not given to the retailer at the time of registration will no longer be able to start your vehicle.

⚠ CAUTION

Do not allow the immobilizer system key, which contains an electrical transponder, to come into contact with water or salt water. This could affect system function.

When the doors are locked using one of the following methods, the doors cannot be opened using the inside or outside door handles. The doors must be unlocked to open the doors.

⚠ WARNING

- **Before opening any door, always look for and avoid oncoming traffic.**
- **Do not leave children unattended inside the vehicle. They could unknowingly activate switches or controls. Unattended children could become involved in serious accidents.**
- **Do not leave children or adults who would normally require the assistance of others alone in your vehicle. Pets should also not be left alone. They could accidentally injure themselves or others through inadvertent operation of the vehicle. Also, on hot, sunny days, temperatures in a closed vehicle could quickly become high enough to cause severe or possibly fatal injuries to people or animals.**

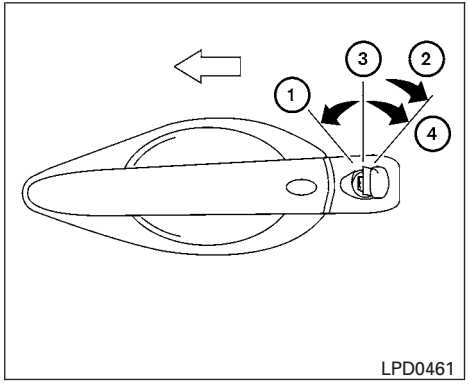

Driver's side

LOCKING WITH KEY

The power door lock system allows you to lock or unlock all doors at the same time.

Turning the key toward the front ① of the vehicle locks all doors.

Turning the key one time toward the rear ② of the vehicle unlocks that door. From that position, returning the key to neutral ③ (where the key can only be removed and inserted) and turning it toward the rear again ④ within 5 seconds unlocks all doors.

Opening and closing windows

The driver's door key operation allows you to open and close windows equipped with automatic operation at the same time.

- To open the windows, turn the driver's door key toward the rear of the vehicle for **longer than 1 second** after the door is unlocked.
- To close the windows, turn the driver's door key toward the front of the vehicle for **longer than 1 second** after the door is locked.

Windows stop when the key cylinder is released.

NOTE:

When the window lock button is pressed the key will not operate the window open or close function.

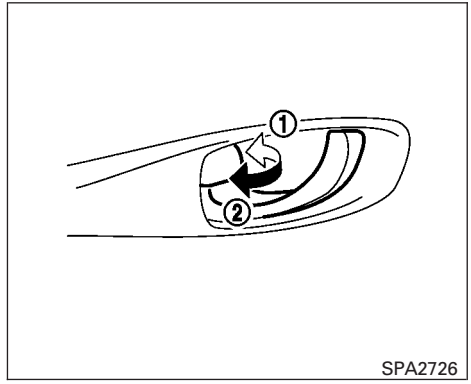

Inside lock

LOCKING WITH INSIDE LOCK KNOB

To lock the door without the key, move the inside lock knob to the lock position ①, then close the door.

To unlock the door without the key, move the inside lock knob to the unlock position ②.

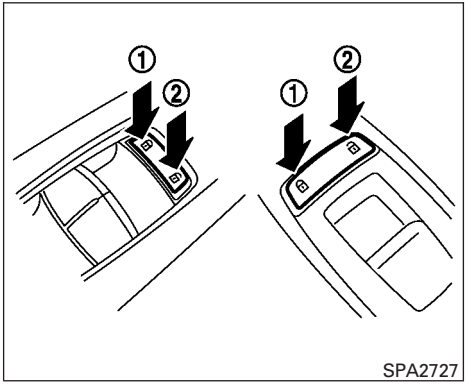

SPA2727

LOCKING WITH POWER DOOR LOCK SWITCH

To lock all the doors without a key, push the door lock switch (driver's or front passenger's side) to the lock position ①. When locking the door this way, be certain not to leave the key inside the vehicle.

To unlock all the doors without a key, push the door lock switch (driver's or front passenger's side) to the unlock position ②.

Lockout protection

When the power door lock switch is moved to the lock position and any door is open, all doors will lock and unlock automatically. With the Intelligent Key left in the vehicle and any door open, all doors will unlock automatically and a chime will sound after the door is closed.

These functions help to prevent the Intelligent Key from being accidentally locked inside the vehicle.

AUTOMATIC DOOR LOCKS

- All doors lock automatically when the vehicle speed reaches 15 mph (24 km/h).
- All doors unlock automatically when the ignition is placed in the OFF position.

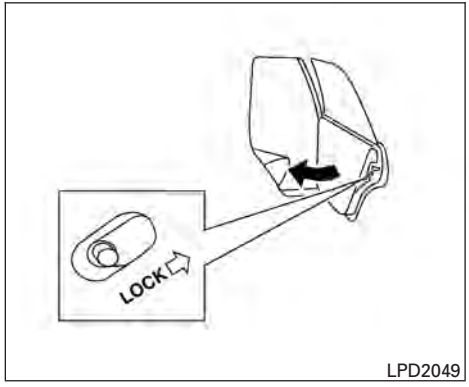

LPD2049

CHILD SAFETY REAR DOOR LOCK

Child safety locks help prevent the rear doors from being opened accidentally, especially when small children are in the vehicle.

The child safety lock levers are located on the edge of the rear doors.

When the lever is in the LOCK position, the door can be opened only from the outside.

⚠ WARNING

- **Radio waves could adversely affect electric medical equipment. Those who use a pacemaker should contact the electric medical equipment manufacturer for the possible influences before use.**
- **The Intelligent Key transmits radio waves when the buttons are pressed. The FAA advises the radio waves may affect aircraft navigation and communication systems. Do not operate the Intelligent Key while on an airplane. Make sure the buttons are not operated unintentionally when the unit is stored for a flight.**

The Intelligent Key system can operate all the door locks using the remote control function or pushing the request switch on the vehicle without taking the key out from a pocket or purse. The operating environment and/or conditions may affect the Intelligent Key system operation.

Be sure to read the following before using the Intelligent Key system.

⚠ CAUTION

- **Be sure to carry the Intelligent Key with you when operating the vehicle.**
- **Never leave the Intelligent Key in the vehicle when you leave the vehicle.**

The Intelligent Key is always communicating with the vehicle as it receives radio waves. The Intelligent Key system transmits weak radio waves. Environmental conditions may interfere with the operation of the Intelligent Key system under the following operating conditions:

- When operating near a location where strong radio waves are transmitted, such as a TV tower, power station and broadcasting station.
- When in possession of wireless equipment, such as a cellular telephone, transceiver or a CB radio.
- When the Intelligent Key is in contact with or covered by metallic materials.
- When any type of radio wave remote control is used nearby.
- When the Intelligent Key is placed near an electric appliance such as a personal computer.
- When the vehicle is parked near a parking meter.

In such cases, correct the operating conditions before using the Intelligent Key function or use the mechanical key.

Although the life of the battery varies depending on the operating conditions, the battery's life is approximately two years. If the battery is discharged, replace it with a new one.

When the Intelligent Key battery is low, an indicator illuminates in the vehicle information display. For additional information, refer to "Vehicle information display" in the "Instruments and controls" section of this manual.

Since the Intelligent Key is continuously receiving radio waves, if the key is left near equipment which transmits strong radio waves, such as signals from a TV and personal computer, the battery life may become shorter.

For additional information, refer to "Battery replacement" in the "Maintenance and do-it-yourself" section of this manual.

As many as four Intelligent Keys can be registered and used with one vehicle. For information about the purchase and use of additional Intelligent Keys, it is recommended that you visit an INFINITI retailer.

⚠CAUTION

Listed below are conditions or occurrences which will damage the Intelligent Key:

- **Do not allow the Intelligent Key, which contains electrical components, to come into contact with water or salt water. This could affect the system function.**
- **Do not drop the Intelligent Key.**
- **Do not strike the Intelligent Key sharply against another object.**
- **Do not change or modify the Intelligent Key.**
- **Wetting may damage the Intelligent Key. If the Intelligent Key gets wet, immediately wipe until it is completely dry.**
- **Do not place the Intelligent Key for an extended period in an area where temperatures exceed 140°F (60°C).**
- **Do not attach the Intelligent Key with a key holder that contains a magnet.**
- **Do not place the Intelligent Key near equipment that produces a magnetic field, such as a TV, audio equipment and personal computers.**

If an Intelligent Key is lost or stolen, INFINITI recommends erasing the ID code of that Intelligent Key from the vehicle. This may prevent the unauthorized use of the Intelligent Key to operate the vehicle. For information regarding the erasing procedure, it is recommended that you visit an INFINITI retailer.

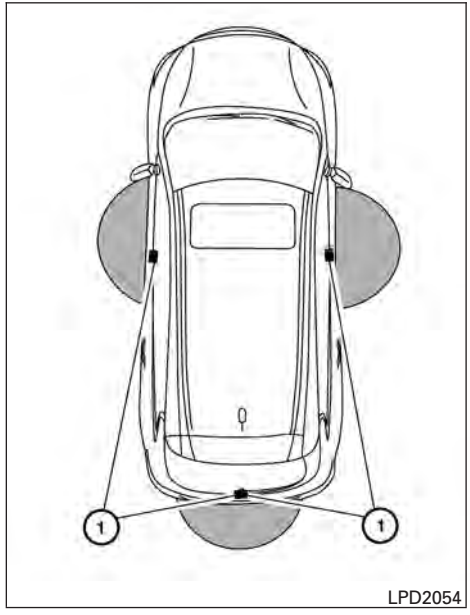

LPD2054

OPERATING RANGE

The Intelligent Key functions can only be used when the Intelligent Key is within the specified operating range from the request switch ①.

When the Intelligent Key battery is discharged or strong radio waves are present near the operating location, the Intelligent Key operating range becomes narrower, and the Intelligent Key may not function properly.

The operating range is within 31.5 in (80 cm) from each request switch ①.

If the Intelligent Key is too close to the door glass, handle or rear bumper, the request switches may not function.

When the Intelligent Key is within the operating range, it is possible for anyone, even someone who does not carry the Intelligent Key, to push the request switch to lock/unlock the doors.

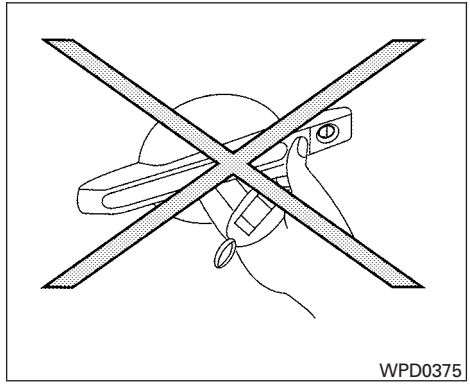

DOOR LOCKS/UNLOCKS PRECAUTION

- Do not push the door handle request switch with the Intelligent Key held in your hand as illustrated. The close distance to the door handle will cause the Intelligent Key system to have difficulty recognizing that the Intelligent Key is outside the vehicle.
- After locking with the door handle request switch, verify the doors are securely locked by testing them.
- To prevent the Intelligent Key from being left inside the vehicle, make sure you carry the Intelligent Key with you and then lock the doors.
- Do not pull the door handle before pushing the door handle request switch. The door will be unlocked but will not open. Release the door handle once and pull it again to open the door.

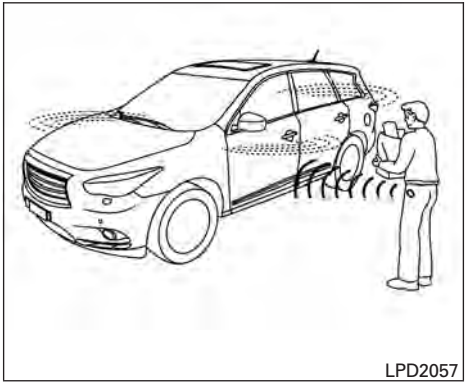

LPD2057

INFINITI INTELLIGENT KEY OPERATION

You can lock or unlock the doors without taking the Intelligent Key out of your pocket or bag.

When you carry the Intelligent Key with you, you can lock or unlock all doors by pushing the door handle request switch within the range of operation.

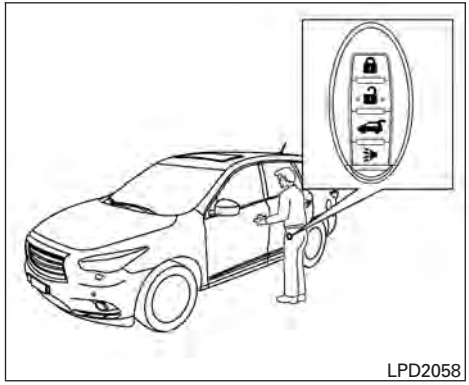

LPD2058

Locking doors

1. Move the shift lever to the P (Park) position, place the ignition switch in the LOCK position and make sure you carry the Intelligent Key with you.
2. Close all doors.
3. Push any door handle request switch while carrying the Intelligent Key with you.
4. All doors and the rear liftgate will lock.
5. The hazard warning lights flash twice and the outside buzzer sounds once.

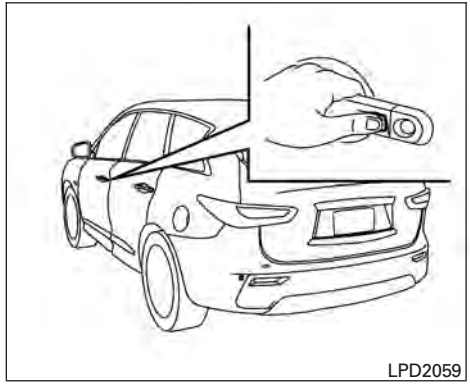

LPD2059

NOTE:

- **Request switches for all doors and liftgate can be deactivated when the I-Key Door Lock setting is switched to OFF in the Vehicle Settings of the vehicle information display. For additional information, refer to “Vehicle information display” in the “Instruments and controls” section of this manual.**
- **Doors lock with the door handle request switch while the ignition switch is not in the LOCK position.**

- **Doors do not lock by pushing the door handle request switch while any door is open. However, doors lock with the mechanical key even if any door is open.**
- **Doors do not lock with the door handle request switch with the Intelligent Key inside the vehicle and a beep sounds to warn you. However, when an Intelligent Key is inside the vehicle, doors can be locked with another Intelligent Key.**

⚠ CAUTION

- **After locking the doors using the request switch, make sure that the doors have been securely locked by operating the door handles or the rear liftgate opener switch.**
- **When locking the doors using the request switch, make sure to have the Intelligent Key in your possession before operating the request switch to prevent the Intelligent Key from being left in the vehicle.**
- **The request switch is operational only when the Intelligent Key has been detected by the Intelligent Key system.**

Lockout protection

To prevent the Intelligent Key from being accidentally locked in the vehicle, lockout protection is equipped with the Intelligent Key system.

When the driver's side door is open, the doors are locked, and then the Intelligent Key is put inside the vehicle and all the doors are closed; the lock will automatically unlock and the door buzzer sounds.

NOTE:

The doors may not lock when the Intelligent Key is in the same hand that is operating the request switch to lock the door. Put the Intelligent Key in a purse, pocket or your other hand.

⚠ CAUTION

The lockout protection may not function under the following conditions:

- **When the Intelligent Key is placed on top of the instrument panel.**
- **When the Intelligent Key is placed inside the glove box or a storage bin.**
- **When the Intelligent Key is placed inside the door pockets.**
- **When the Intelligent Key is placed inside or near metallic materials.**

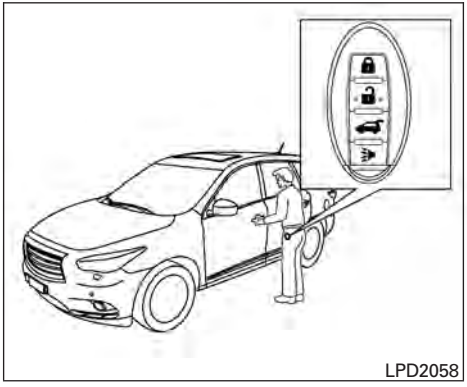
LPD2058

Unlocking doors

1. Carry the Intelligent Key.
2. Push the door handle request switch.
3. The hazard indicator lights flash once and the outside buzzer sounds once.
4. Push the door handle request switch again within 1 minute to unlock all doors.

For power liftgate opening:

1. Carry the Intelligent Key.
2. Press the power liftgate request switch.

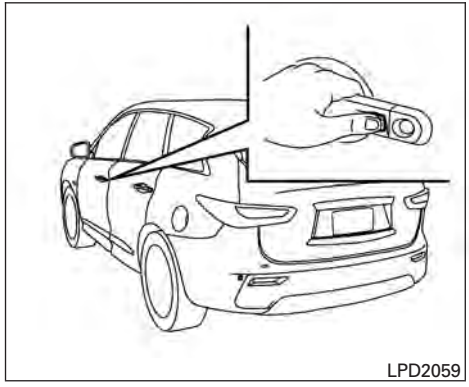
LPD2059

NOTE:

Request switches for all doors and liftgate can be deactivated when the I-Key Door Lock setting is switched to OFF in the Vehicle Settings of the vehicle information display. For additional information, refer to "Vehicle information display" in the "Instruments and controls" section of this manual.

If a door handle is pulled while unlocking the doors, that door may not be unlocked. Returning the door handle to its original position will unlock the door. If the door does not unlock after returning the door handle, push the door handle request switch to unlock the door.

All doors will be locked automatically unless one of the following operations is performed within 1 minute after pushing the request switch.

- Opening any door.
- Pushing the ignition switch.

The interior light timer illuminates for a period of time when a door is unlocked and the room light switch is in the DOOR position.

The interior light can be turned off without waiting by performing one of the following operations:

- Placing the ignition switch in the ON position.
- Locking the doors with the remote control.
- Switching the room light switch to the OFF position.
- Switching the Auto Room Lamp to the OFF position in Vehicle Settings of the vehicle information display. For additional information, refer to "Vehicle information display" in the "Instruments and controls" section of this manual.

HOW TO USE THE REMOTE KEYLESS ENTRY FUNCTION

The remote keyless entry function can operate all door locks using the remote keyless function of the Intelligent Key. The remote keyless function can operate at a distance of 33 ft (10 m) away from the vehicle. The operating distance depends upon the conditions around the vehicle.

The remote keyless entry function will not function under the following conditions:

- When the Intelligent Key is not within the operational range.
- When the doors or the rear liftgate are open or not closed securely.
- When the Intelligent Key battery is discharged.

⚠ CAUTION

When locking the doors using the Intelligent Key, be sure not to leave the key in the vehicle.

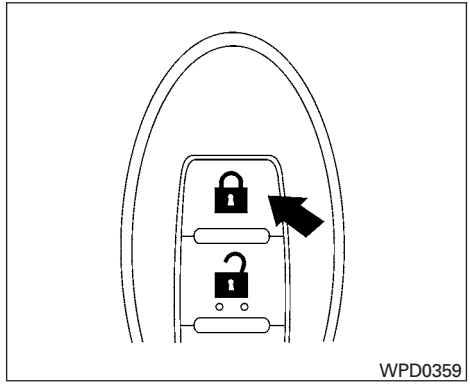

Locking doors

1. Place the ignition switch in the LOCK position.
2. Close all doors.
3. Press the button on the Intelligent Key.
4. The hazard indicator lights flash twice and the horn beeps once.
5. All doors will be locked.

⚠ CAUTION

After locking the doors using the Intelligent Key, be sure that the doors have been securely locked by operating the door handles.

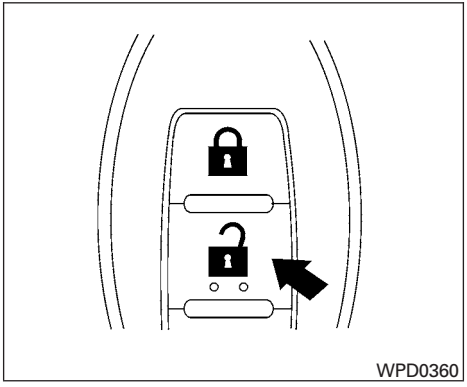

Unlocking doors

1. Press the button on the Intelligent Key.
2. The hazard indicator lights flash once.
3. Press the button again within 5 seconds to unlock all doors.

NOTE:

The unlocking operation can be changed in Selective door unlock in the Vehicle Settings of the vehicle information display. For additional information, refer to "Vehicle information display" in the "Instruments and controls" section of this manual.

All doors will be locked automatically unless one of the following operations is performed within 1 minute after pressing the button:

- Opening any doors.
- Pushing the ignition switch.

The interior light illuminates for a period of time when a door is unlocked and the room light switch is in the DOOR position.

The light can be turned off without waiting by performing one of the following operations:

- Placing the ignition switch in the ON position.
- Locking the doors with the Intelligent Key.
- Switching the room light switch to the OFF position.
- Switching the Auto Room Lamp to the OFF position in Vehicle Settings of the vehicle information display. For additional information, refer to "Vehicle information display" in the "Instruments and controls" section of this manual.

Opening windows

The Intelligent Key allows you to simultaneously open windows equipped with automatic operation.

- To open the windows, press the button on the Intelligent Key for **longer than 3 seconds** after all doors are unlocked.

The door windows will open while pressing the button on the Intelligent Key.

The door windows cannot be closed by using the Intelligent Key.

Linking the key fob to automatic drive positioner memory (if so equipped)

If the vehicle is equipped with automatic drive positioner, the key fob can be linked to a memory setting.

For additional information, refer to "Automatic drive positioner" in this section.

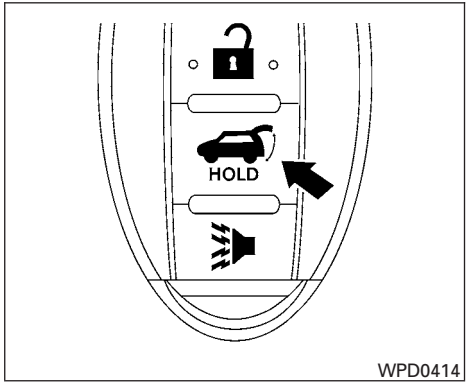

Releasing the rear liftgate

The rear liftgate can be opened and closed by performing the following:

- Press the button for longer than 0.5 seconds to open the rear liftgate.
- Press the button again for longer than 0.5 seconds to close the rear liftgate.

When the button is pressed during the open or close process, the liftgate motors will stop. When the button is pressed again, the liftgate will reverse direction.

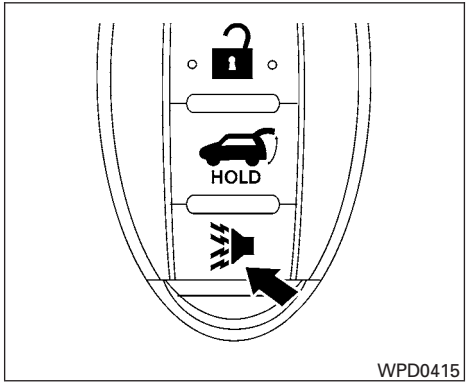

Using the panic alarm

If you are near your vehicle and feel threatened, you may activate the panic alarm to call attention by pressing and holding the button on the Intelligent Key for **longer than 0.5 seconds.** The panic alarm and headlights will stay on for a period of time.

The panic alarm stops when:

- It has run for a period of time, or
- Any button is pressed on the Intelligent Key.
- The request switch on the driver or passenger door is pushed and the Intelligent Key is in range of the door handle.

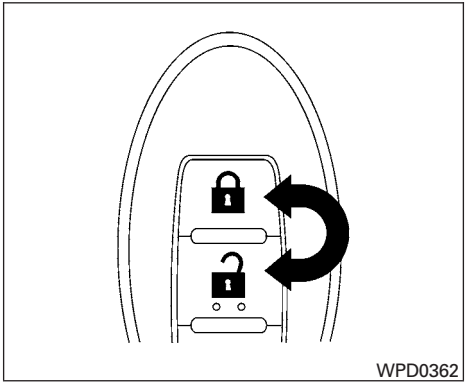

Answer back horn feature

If desired, the answer back horn feature can be deactivated using the Intelligent Key. When it is deactivated and the LOCK button is pushed, the hazard indicator lights flash twice. When the UNLOCK button is pushed, neither the hazard indicator lights nor the horn operates.

NOTE:

If you change the answer back horn and light flash feature with the Intelligent Key, the vehicle information display screen will show the current mode after the ignition switch has been cycled from the OFF to the ON position. The vehicle information display screen can also be used to change the answer back horn mode.

To deactivate: Press and hold the and buttons **for at least 2 seconds.** The hazard indicator lights will flash three times to confirm that the answer back horn feature has been deactivated.

To activate: Press and hold the and buttons **for at least 2 seconds once more.** The hazard indicator lights will flash once and the horn will sound once to confirm that the horn beep feature has been reactivated.

Deactivating the horn beep feature does not silence the horn if the alarm is triggered.

WARNING SIGNALS

To help prevent the vehicle from moving unexpectedly by erroneous operation of the Intelligent Key or to help prevent the vehicle from being stolen, a chime or buzzer sounds from inside and outside the vehicle and a warning is displayed in the instrument panel.

When a chime or beep sounds or a warning is displayed, be sure to check the vehicle and the Intelligent Key.

For additional information, refer to the “Troubleshooting guide” in this section and “Vehicle information display” in the “Instruments and controls” section of this manual.

TROUBLESHOOTING GUIDE

Verify the location of all Intelligent Keys that are programmed for the vehicle. If another Intelligent Key is in range or inside the vehicle, the vehicle system may respond differently than expected.

Symptom		Possible Cause	Remedy
When stopping the engine	The Shift to Park warning appears on the display and the inside warning chime sounds continuously.	The shift lever is not in the P (Park) position.	Move the shift lever to the P (Park) position.
When shifting the shift lever to the P (Park) position	The Push ignition to OFF warning appears in the display.	The ignition switch is in the ACC or ON position.	Place the ignition switch in the OFF position.
When opening the driver's door to get out of the vehicle	The Door Open warning appears on the display and the inside warning chime sounds continuously.	The ignition switch is in the ACC or ON position.	Place the ignition switch in the OFF position.
When closing the door after getting out of the vehicle	The No Key Detected warning appears on the display, the outside chime sounds three times and the inside warning chime sounds for approximately 3 seconds.	The ignition switch is in the ACC or ON position.	Place the ignition switch in the OFF position.
	The Shift to Park warning appears on the display and the outside chime sounds continuously.	The ignition switch is in the ACC position and the shift lever is not in the P (Park) position.	Move the shift lever to the P (Park) position and place the ignition switch in the OFF position.
When closing the door with the inside lock knob turned to LOCK	The outside chime sounds for approximately 3 seconds and all the doors unlock.	The Intelligent Key is inside the vehicle.	Carry the Intelligent Key with you.
When pushing the door handle request switch or the LOCK button on the Intelligent Key to lock the door	The outside chime sounds for approximately 2 seconds.	The Intelligent Key is inside the vehicle.	Carry the Intelligent Key with you.

Symptom		Possible Cause	Remedy
When pushing the ignition switch to start the engine	The Intelligent Key battery indicator appears on the display.	The battery charge is low.	Replace the battery with a new one. For additional information, refer to “Battery replacement” in the “Maintenance and do-it-yourself” section of this manual.
	The No Key Detected warning appears on the display, the outside chime sounds three times and the inside warning chime sounds for approximately 3 seconds.	The Intelligent Key is not in the vehicle.	Carry the Intelligent Key with you.
When pushing the ignition switch	The Intelligent Key system warning light in the meter illuminates in yellow.	It warns of a malfunction with the Intelligent Key system.	It is recommended that you visit an INFINITI retailer.

REMOTE ENGINE START (if so equipped)

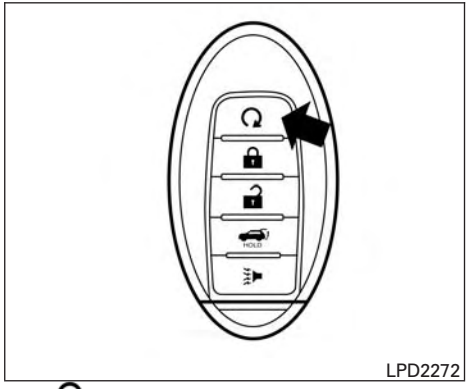

LPD2272

The button will be on the INFINITI Intelligent Key if the vehicle has remote engine start. This feature allows the engine to start from outside the vehicle.

The following features may be affected when the remote start feature is used:

- Vehicles with an automatic climate control system will default to either a heating or cooling mode depending on the outside temperature.
- Vehicles without automatic climate control will default to the last used heating or cooling mode.
- Vehicles equipped with heated seats may have this feature come on during a remote start. For additional information, refer to "Heated front seats" in the "Instruments and controls" section of this manual.

Laws in some local communities may restrict the use of remote starters. For example, some laws require a person using remote start to have the vehicle in view. Check local regulations for any requirements.

Other conditions may affect the function of the Remote Engine Start feature. For additional information, refer to "Conditions the remote start will not work" in this section.

Other conditions can affect the performance of the Intelligent Key transmitter. For additional information, refer to "INFINITI Intelligent Key System" in this section.

REMOTE ENGINE START OPERATING RANGE

The remote engine start function can only be used when the Intelligent Key is within the specified operating range from the vehicle.

When the Intelligent Key battery is discharged or other strong radio waves sources are present near the operating location, the Intelligent Key operating range becomes narrower, and the Intelligent Key may not function properly.

The remote engine start operating range is approximately 197 ft (60 m) from the vehicle.

REMOTE STARTING THE VEHICLE

To use the remote start feature to start the engine perform the following:

1. Aim the Intelligent Key at the vehicle.
2. Press the LOCK button to lock all doors.
3. Within 5 seconds press and hold the remote start button until the turn signal lights flash and the tail lamps turn on. If the vehicle is not within view press and hold the remote start button for at least 2 seconds.

The following events will occur when the engine starts:

- The parking lights will turn on and remain on as long as the engine is running.
- The doors will be locked and the climate control system may come on.

- The engine will continue to run for 10 minutes. Repeat the steps to extend the time for an additional 10 minutes. For additional information, refer to “Extending engine run time” in this section.

Depress and hold the brake then press the push-button ignition switch to the ON position before driving. For additional information, refer to “Driving the vehicle” in the “Starting and driving” section of this manual.

EXTENDING ENGINE RUN TIME

The remote start feature can be extended one time by performing the steps listed in “Remote starting the vehicle” in this section. Run time will be calculated as follows:

- The first 10 minute run time will start when the remote start function is performed.
- The second 10 minutes will start immediately when the remote start function is performed again. For example, if the engine has been running for 5 minutes, and 10 minutes are added, the engine will run for a total of 15 minutes.
- Extending engine run time will bring you to the two remote start limit.

A maximum of two remote starts, or a single start with an extension, are allowed between ignition cycles.

The ignition switch must be cycled to the ON position and then back to the OFF position before the remote start procedure can be used again.

CANCELING A REMOTE START

To cancel a remote start, perform one of the following:

- Aim the Intelligent Key at the vehicle and press until the parking lights turn off.
- Turn on the hazard warning flashers.
- Cycle the ignition switch ON and then OFF.
- The extended engine run time has expired.
- The first 10 minute timer has expired.
- The engine hood has been opened.
- The shift lever is moved out of park.
- The alarm sounds due to illegal entry into the vehicle.
- The ignition switch is pushed without an Intelligent Key in the vehicle.
- The ignition switch is pushed with an Intelligent Key in the vehicle but the brake pedal is not depressed.

CONDITIONS THE REMOTE START WILL NOT WORK

The remote start will not operate if any of the following conditions are present:

- The ignition switch is placed in the ON position.
- The hood is not securely closed.
- The hazard indicator lights are on.
- The engine is still running. The engine must be completely stopped. Wait at least 6 seconds if the engine goes from running to off. This is not applicable when extending engine run time.
- The remote start button is not pressed and held for at least 2 seconds.
- The remote start button is not pressed and held within 5 seconds of pressing the lock button.
- The brake is pressed.
- The doors are not closed and locked.
- The liftgate is open.

- The I–Key indicator message is displayed in the vehicle information display.
- The alarm sounds due to illegal entry into the vehicle.
- Two remote vehicle starts, or a single remote start with an extension, have already been used.
- The vehicle is not in P (Park).
- There is a detected registered key already inside of the vehicle.
- The remote start function has been switched to the OFF position in Vehicle Settings of the vehicle information display. For additional information, refer to “Vehicle information display” in the “Instruments and controls” section of this manual.

The remote engine start may display a warning or indicator in the vehicle information display. For additional information, refer to “Vehicle information display” in the “Instruments and controls” section of this manual.

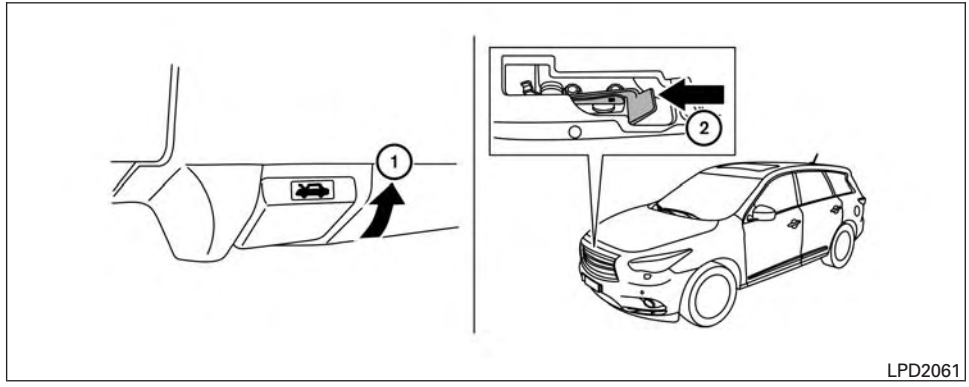

① Pull the hood lock release handle located below the driver side instrument panel. The hood will spring up slightly.

② Push the lever at the front of the hood to the side as illustrated with your fingertips and raise the hood.

When closing the hood, lower it slowly and make sure it locks into place.

⚠ WARNING

- **Make sure the hood is completely closed and latched before driving. Failure to do so could cause the hood to fly open and result in an accident.**
- **If you see steam or smoke coming from the engine compartment, to avoid injury do not open the hood.**

⚠WARNING

- **Always be sure the liftgate has been closed securely to prevent it from opening while driving.**
- **Do not drive with the liftgate open. This could allow dangerous exhaust gases to be drawn into the vehicle. For additional information, refer to "Exhaust gas (carbon monoxide)" in the "Starting and driving" section of this manual.**
- **Do not leave children unattended inside the vehicle. They could unknowingly activate switches or controls. Unattended children could become involved in serious accidents.**
- **Always be sure that hands and feet are clear of the door frame to avoid injury while closing the liftgate.**

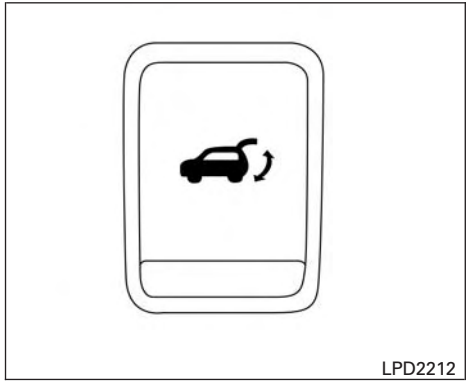

Instrument panel switch

OPERATING THE POWER LIFTGATE

⚠WARNING

- **Make sure that all passengers have their hands, etc., inside the vehicle before closing the liftgate.**
- **Do not leave children unattended inside the vehicle. They could unknowingly activate switches or controls. Unattended children could become involved in serious accidents.**

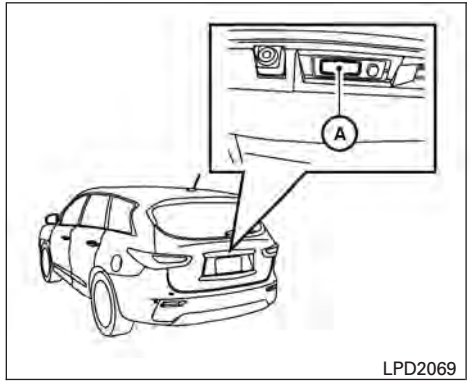

Liftgate opener switch

NOTE:

To open, close or reverse the power liftgate, the shift lever must be in P (Park). Also, the power liftgate will not operate if battery voltage is low.

Power Open:

The power liftgate automatically moves from the fully closed position to the fully open position in approximately 5 to 8 seconds. The power open feature can be activated by the switch on the Intelligent Key, the instrument panel switch or the liftgate open switch. The hazard lights flash and a

chime sounds to indicate the power open sequence has been started.

- When the vehicle is locked, the liftgate can be opened by the instrument panel switch, Intelligent Key and liftgate opener switch Ⓐ (with the Intelligent Key in liftgate range). The liftgate will individually unlock and open. Once the liftgate is closed, the vehicle will remain in the unlock status.
- The Intelligent Key button must be held for 0.5 second before the liftgate opens.
- The liftgate must be unlocked to open it with the liftgate opener switch Ⓐ and without the Intelligent Key in liftgate range.
- The switch on the liftgate Ⓐ can only be used to open the liftgate if the MAIN switch (located in the Instrument panel) is in the ON position.

A warning chime will sound if the shift lever is moved out of P (Park) during a power open operation.

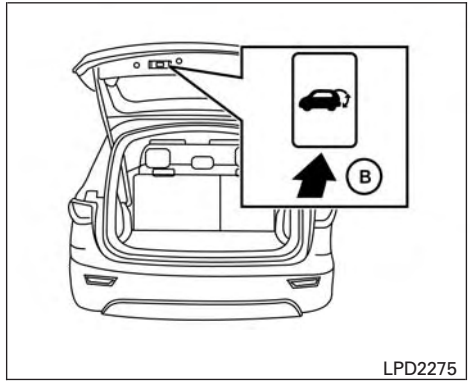

Liftgate close switch

Power Close:
The power liftgate automatically moves from the fully open position to the secondary position. When the liftgate reaches the secondary position, the cinching motor engages and pulls the liftgate to its primary latch position. Power close takes approximately 7 to 10 seconds. The power close feature can be activated by the switch on the Intelligent Key, the instrument panel and the liftgate close switch Ⓑ. The hazard lights flash and a chime sounds to indicate the power close sequence has been started.

- If the liftgate opener switch Ⓐ is activated while the cinching motor is engaged, the cinching motor will disengage and release the latch.
- The Intelligent Key button must be held for 0.5 second before the liftgate closes.
- The switch on the liftgate Ⓑ can only be used to close the liftgate if the power liftgate main switch is in the ON position.

Reverse:
The power liftgate will reverse direction immediately during power open or power close Ⓑ if the Intelligent Key, instrument panel or liftgate switch is pushed. A chime will sound to announce the reversal.

Auto Reverse:
If an obstacle is detected during power open or power close, a warning chime will sound and the liftgate will reverse direction and return to the full open or full close position. If a second obstacle is detected, the liftgate motion will stop and the liftgate will enter manual mode.

A pinch strip is mounted on each side of the liftgate. If an obstacle is detected by a pinch strip during power close, the liftgate will reverse direction and return to the full open position.

NOTE:

If the pinch strip is damaged or removed, the power close function will not operate.

⚠WARNING

There are some small distances immediately before the closed position which cannot be detected. Make sure that all passengers have their hands, etc., inside the vehicle before closing the liftgate.

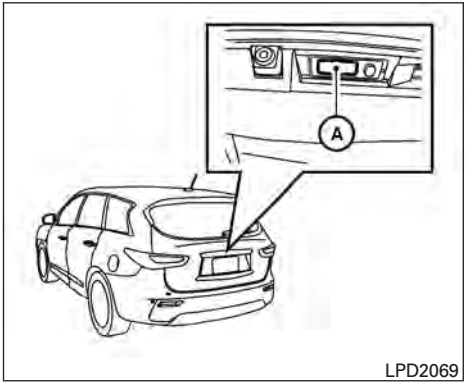

LPD2069

Manual Mode:
If power operation is not available, the liftgate may be operated manually. Power operation may not be available if the power liftgate main switch is in the ON position, if multiple obstacles have been detected in a single power cycle, or if battery voltage is low.

If the power liftgate opener switch Ⓐ is pushed during power open or close, the power operation will be canceled and the liftgate can be operated manually.

To open the liftgate manually, press the liftgate opener switch Ⓐ and lift the liftgate.

To close, lower and push the liftgate down securely.

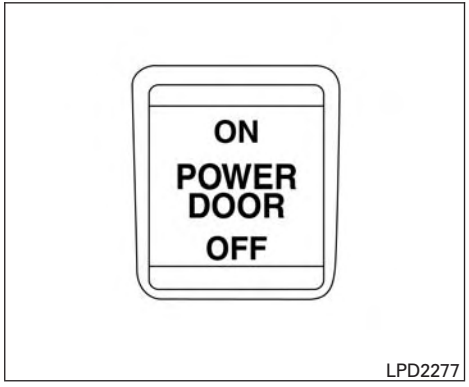

LPD2277

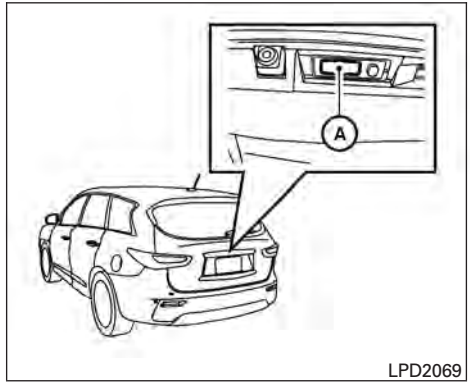

LPD2069

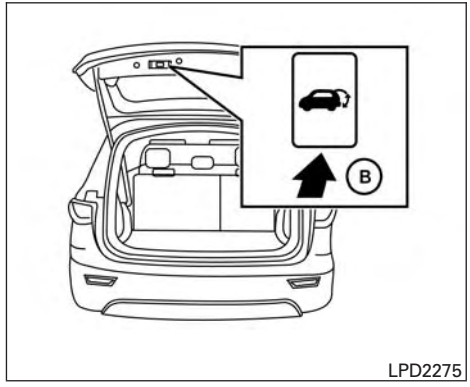

LPD2275

POWER LIFTGATE MAIN SWITCH

The power liftgate operation can be turned on or off by the power liftgate main switch on the instrument panel.

When the power liftgate main switch is pushed to the OFF position, the power operation is not available by the liftgate opener switch Ⓐ or liftgate close switch Ⓑ on the liftgate.

Power operation is available when in the OFF position by the instrument panel switch and the key fob button.

LIFTGATE RELEASE LEVER

⚠WARNING

- **Always be sure the liftgate has been closed securely to prevent it from opening while driving.**
- **Do not drive with the liftgate open. This could allow dangerous exhaust gases to be drawn into the vehicle. For additional information, refer to "Exhaust gas (carbon monoxide)" in the "Starting and driving" section of this manual.**

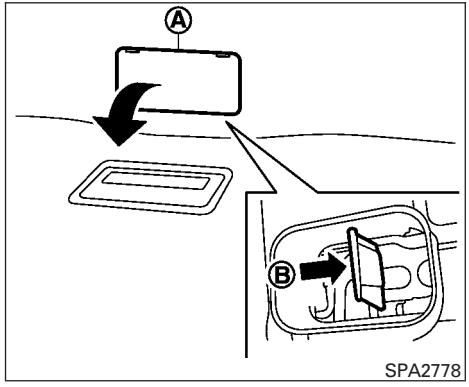

SPA2778

Power liftgate release

If the liftgate cannot be opened with the instrument panel switch, liftgate opener switch or key fob due to a discharged battery, follow these steps:

1. Remove the cover Ⓐ on the inside of the liftgate.
2. Move the lever Ⓑ as illustrated to open the liftgate.

It is recommended that you contact an INFINITI retailer as soon as possible for repair.

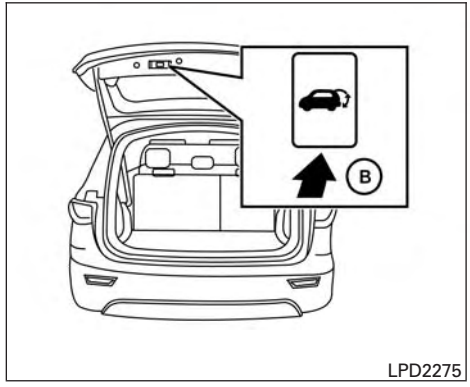

LPD2275

LIFTGATE POSITION SETTING

The liftgate can be set to open to a specific height (Garage mode) by performing the following:

1. Open the liftgate using the request switch or the Intelligent Key.
2. Pull the liftgate down and move to the desired height position (the liftgate will have some resistance when being manually adjusted).
3. Press and hold the power liftgate switch Ⓑ located on the liftgate for more than 3 seconds or until two beeps are heard.

The liftgate will open to the selected position setting. To change the position of the liftgate, repeat Steps 1-3 for setting the position of the liftgate.

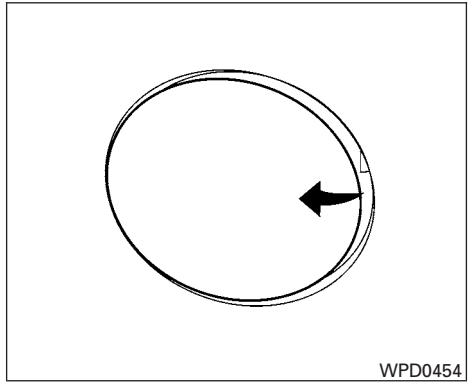

OPENING THE FUEL-FILLER DOOR

The fuel-filler door automatically unlocks when the driver's door is unlocked.

1. Unlock the fuel-filler door using one of the following operations:
   - Unlock the driver's door with the key fob.
   - Unlock the driver's door with the key.
   - Push the power door lock switch to the unlock position.
   - Push the door handle request switch (with the key fob in range).
2. To open the fuel-filler door, push the right side of the fuel-filler door to release.

To lock, close the fuel-filler door securely and lock the doors.

FUEL-FILLER CAP

WARNING

- **Gasoline is extremely flammable and highly explosive under certain conditions. You could be burned or seriously injured if it is misused or mishandled. Always stop the engine and do not smoke or allow open flames or sparks near the vehicle when refueling.**
- **Do not attempt to top off the fuel tank after the fuel pump nozzle shuts off automatically. Continued refueling may cause fuel overflow, resulting in fuel spray and possibly a fire.**
- **Use only an original equipment type fuel-filler cap as a replacement. It has a built-in safety valve needed for proper operation of the fuel system and emission control system. An incorrect cap can result in a serious malfunction and possible injury. It could also cause the Malfunction Indicator Light (MIL) to come on.**

- **Never pour fuel into the throttle body to attempt to start your vehicle.**
- **Do not fill a portable fuel container in the vehicle or trailer. Static electricity can cause an explosion of flammable liquid, vapor or gas in any vehicle or trailer. To reduce the risk of serious injury or death when filling portable fuel containers:**
  - **Always place the container on the ground when filling.**
  - **Do not use electronic devices when filling.**
  - **Keep the pump nozzle in contact with the container while you are filling it.**
  - **Use only approved portable fuel containers for flammable liquid.**

⚠ CAUTION

- **Do not use E-15 or E-85 fuel in your vehicle. For additional information, refer to "Fuel Recommendation" in the "Technical and consumer information" section of this manual.**
- **The LOOSE FUEL CAP warning will appear if the fuel-filler cap is not properly tightened. It may take a few driving trips for the message to be displayed. Failure to tighten the fuel-filler cap properly after the LOOSE FUEL CAP warning appears may cause the Malfunction Indicator Light (MIL) to illuminate.**
- **Failure to tighten the fuel-filler cap properly may cause the Malfunction Indicator Light (MIL) to illuminate. If the light illuminates because the fuel-filler cap is loose or missing, tighten or install the cap and continue to drive the vehicle. The light should turn off after a few driving trips. If the light does not turn off after a few driving trips, have the vehicle inspected. It is recommended that you visit an INFINITI retailer for this service.**
- **For additional information, refer to "Malfunction Indicator Light (MIL)" in the "Instruments and controls" section of this manual.**
- **If fuel is spilled on the vehicle body, flush it away with water to avoid paint damage.**

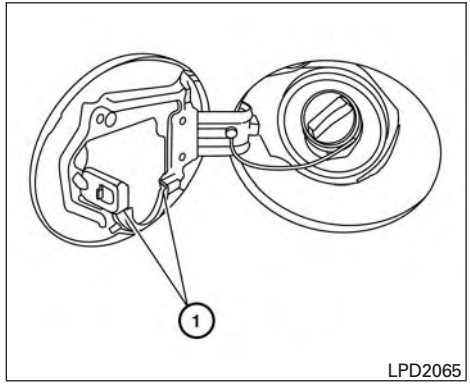

LPD2065

To remove the fuel-filler cap:

1. Turn the fuel-filler cap counterclockwise to remove.
2. Put the fuel-filler cap on the cap holder ① while refueling.

To install the fuel-filler cap:

1. Insert the fuel-filler cap straight into the fuel-filler tube.
2. Turn the fuel-filler cap clockwise until a single click is heard.

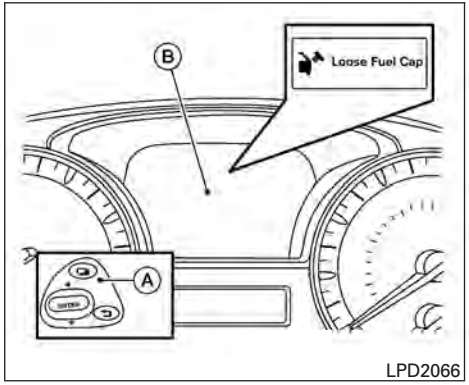

LOOSE FUEL CAP warning

The LOOSE FUEL CAP warning appears in the vehicle information display when the fuel-filler cap is not tightened correctly after the vehicle has been refueled. It may take a few driving trips for the message to be displayed. To turn off the warning, perform the following:

1. Remove and install the fuel-filler cap as soon as possible. For additional information, refer to “Fuel-filler cap” in this section.
2. Tighten the fuel-filler cap until it clicks.
3. Press the button Ⓐ on the steering wheel for about 1 second to turn off the LOOSE FUEL CAP warning Ⓑ after tightening the fuel-filler cap.

WARNING

- **Do not adjust the steering wheel while driving. You could lose control of your vehicle and cause an accident.**
- **Do not adjust the steering wheel any closer to you than is necessary for proper steering operation and comfort. The driver’s air bag inflates with great force. If you are unrestrained, leaning forward, sitting sideways or out of position in any way, you are at greater risk of injury or death in a crash. You may also receive serious or fatal injuries from the air bag if you are up against it when it inflates. Always sit back against the seatback and as far away as practical from the steering wheel. Always use the seat belts.**

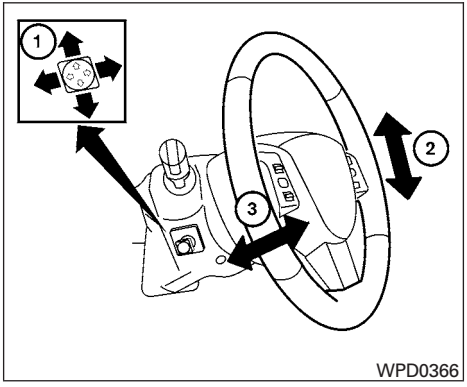

TILT AND TELESCOPIC OPERATION

To adjust the steering wheel move the switch ① in the following directions:

- Adjust the steering wheel up or down in direction ② to the desired tilt position.
- Adjust the steering wheel forward or backward in direction ③ to the desired telescopic position.

⚠ CAUTION

For vehicles with automatic drive positioner: Failure to reset the tilt and telescoping functions of the steering wheel, after the vehicle's battery has been discharged, may prevent the steering wheel position from being adjusted.

For vehicles with automatic drive positioner: Both the tilt and telescopic steering operation must be reset after the vehicle's battery has been discharged in order to prevent the tilt and telescopic operation from locking in one position. When the battery has been recharged or replaced, perform the following:

- For tilt operation: Adjust the switch ① so the steering wheel moves to the highest position ② that can be reached.
- For telescopic operation: Adjust the switch ① so the steering wheel moves to the most forward and backward position ③ that can be reached.

Performing these operations resets the range of the steering wheel's tilt and telescopic function.

Entry/Exit function (if so equipped)

The automatic drive positioner system will make the steering wheel move up automatically when the driver's door is opened and the ignition switch is in the LOCK position. This lets the driver get into and out of the seat more easily. The steering wheel moves back into position when the driver's door is closed and the ignition switch is pushed.

For additional information, refer to "Automatic drive positioner" in this section.

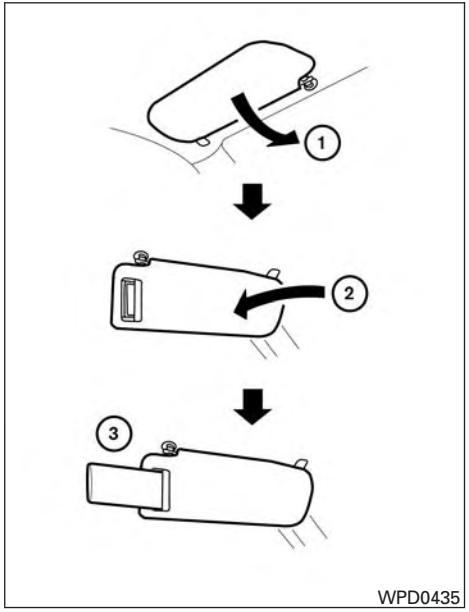

WPD0435

① To block glare from the front, swing down the sun visor.

② To block glare from the side, remove the sun visor from the center mount and swing the visor to the side.

③ Slide the extension sun visor in or out as needed.

⚠ CAUTION

- **Do not store the sun visor before returning the extension to its original position.**
- **Do not pull the extension sun visor forcibly downward.**

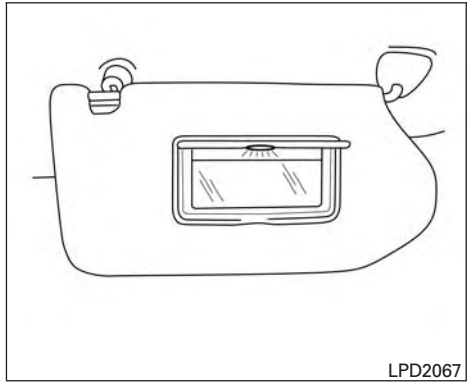
LPD2067

VANITY MIRRORS

To access the vanity mirror, pull the sun visor down and flip open the mirror cover. The vanity mirror will illuminate when the mirror cover is open.

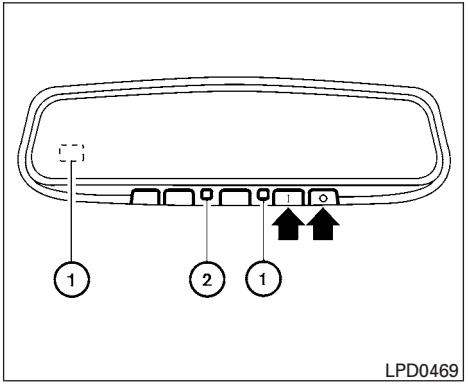

LPD0469

AUTOMATIC ANTI-GLARE REARVIEW MIRROR

The inside mirror is designed so that it automatically dims according to the intensity of the headlights of the vehicle following you. The automatic anti-glare feature operates only when the ignition switch is in the ON position.

The indicator light ② will illuminate when the automatic anti-glare feature is operating.

To turn off the automatic anti-glare feature, press the O button. The indicator light will turn off.

To turn on the automatic anti-glare feature, press the | button again. The indicator light will turn on.

For information on HomeLink® Universal Transceiver operation, refer to “HomeLink® Universal Transceiver” in the “Instruments and controls” section of this manual.

NOTE:

Do not hang any objects over the sensors ① or apply glass cleaner to the sensors. Doing so will reduce the sensitivity of the sensors, resulting in improper operation.

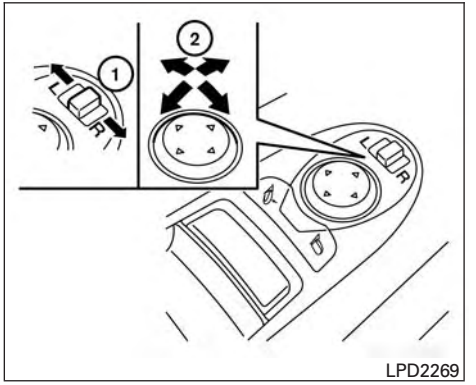

LPD2269

OUTSIDE MIRRORS

The outside mirror remote control will operate only when the ignition switch is in the ACC or ON position.

Move the small switch ① to select the left or right mirror. Adjust each mirror to the desired position using the large switch ②.

⚠ WARNING

- **Objects viewed in the outside mirror on the passenger side are closer than they appear. Be careful when moving to the right. Using only this mirror could cause an accident. Use the inside mirror or glance over your shoulder to properly judge distances to other objects.**
- **Do not adjust the mirrors while driving. You could lose control of your vehicle and cause an accident.**

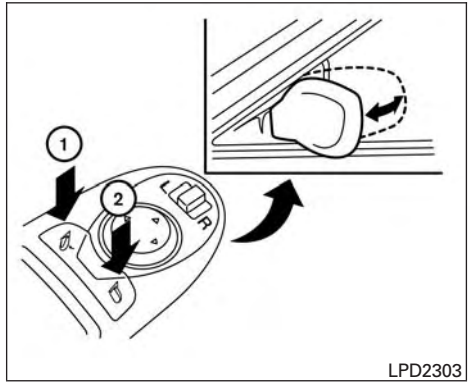

Power folding outside mirrors

⚠ CAUTION

- **Do not touch the mirrors while they are moving. Your hand may be pinched, and the mirror may malfunction.**
- **Do not drive with the mirrors stored. You will be unable to see behind the vehicle.**

Push the switch ② to open the mirrors or the switch ① to close the mirrors.

If one of the mirrors are manually operated or bumped, the mirror body can become loose at the pivot point. To correct electronic mirror operation, cycle the mirrors by pushing the switch ① until completely closed, then push the switch ② until the mirrors are in the open position

Reverse tilt-down feature (if so equipped)

The reverse tilt-down feature will turn both outside mirror surfaces downward to provide better rear visibility close to the vehicle when the mirror control switch is in either the L or R position.

The mirrors automatically return to their original position when you shift out of R (Reverse).

The outside mirror surfaces will return to their original position when one of the following conditions has occurred:

- The shift lever is moved to any position other than R (Reverse).
- The outside mirror control switch is set to the neutral or center position.
- The ignition switch is placed in the OFF position.

NOTE:

If the outside mirror control switch is in the "center" position, the mirror surface will NOT turn downward when the shift lever is moved to R (Reverse).

For additional information, refer to "Automatic drive positioner" in this section.

Heated mirrors

The outside mirrors can be heated to defrost, defog, or de-ice for improved visibility. For additional information, refer to "Rear window and outside mirror defroster switch" in the "Instruments and controls" section of this manual.

AUTOMATIC DRIVE POSITIONER (if so equipped)

The automatic drive positioner system has two features:

- Memory storage function
- Entry/exit function

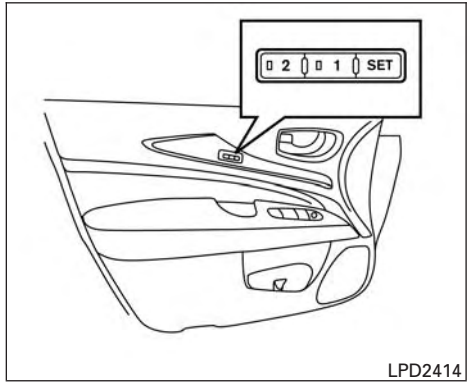

LPD2414

MEMORY STORAGE FUNCTION

Two positions for the driver's seat, steering column, and outside mirrors can be stored in the automatic drive positioner memory. Follow these procedures to use the memory system.

1. Place the ignition in the ON or ACC position (the vehicle should be stopped while setting the memory).
2. Adjust the driver's seat, steering column, and outside mirrors to the desired positions by manually operating each adjusting switch. For additional information, refer to "Seats" in the "Safety—Seats, seat belts and supplemental restraint system" section of

this manual, and “Steering wheel” and “Outside mirrors” in this section.

3. Push the SET switch and, within 5 seconds, push the memory switch (1 or 2).
4. The indicator light for the pushed memory switch will come ON and stay ON for approximately 5 seconds.
5. The chime will sound if the memory has been stored.

NOTE:

If a NEW memory position is stored in the same memory switch, the previous memory position will be overwritten by the new stored position.

Confirming memory storage

Push the SET switch.

- If a memory position has not been stored in the switch (1 or 2) the indicator light for the respective switch will come ON for approximately 0.5 seconds.
- If a memory position has been stored in the switch (1 or 2) then the indicator light for the respective switch will stay ON for approximately 5 seconds.

Linking a key fob to a stored memory position

Each key fob can be linked to a stored memory position (memory switch 1 or 2) with the following procedure.

1. Follow steps 1-3 in the “Memory Storage Function” section for storing the memory position.
2. The indicator light for the pushed memory switch will come ON. While the indicator light is ON for 5 seconds, press the button on the key fob. The indicator light of the linked memory switch will blink. After the indicator light goes off, the key fob is linked to that memory setting.

Once it is linked, when ignition switch is placed in the OFF position, pressing the button on the key fob will move the driver’s seat, steering wheel and outside mirrors to the linked memory switch position.

NOTE:

If a NEW memory position is stored in the linked memory switch, then the key fob will link the NEW position and overwrites the previous position.

ENTRY/EXIT FUNCTION

This system is designed so that the driver’s seat and automatic operation steering column will automatically move when the shift lever is in the P (Park) position. This allows the driver to get into and out of the driver’s seat more easily.

The driver’s seat will slide backward and the steering column will move up:

- When the driver’s door is opened with the ignition switch placed in the OFF position.
- When the ignition switch is changed from ACC to OFF with the driver’s door open.

The driver’s seat and steering wheel will return to the previous position:

- When the ignition switch is changed from ACC or ON while the shift lever is in the P (Park) position.

The entry/exit function can be adjusted or canceled through the Vehicle Settings in the vehicle information display by performing the following:

- Switch the Exit Seat Slide from ON to OFF.
- Switch the Exit Steering UP from ON to OFF.

Restarting the entry/exit function

If the battery cable is disconnected, or if the fuse opens, the stored memory positions will be lost and some of the functions will be restricted:

1. Drive the vehicle over 25 mph (40 km/h).

OR

2. Open and close the driver's door more than two times with the ignition switch in the OFF position.

The entry/exit function should now work properly.

SETTING MEMORY FUNCTION

The position of the following settings can be linked to the Intelligent Key and the memorized settings can be available for each Intelligent Key.

- Climate control system
- Navigation system (if so equipped)
- Audio system

To use the memory function, set the climate, navigation and audio systems to the driver's preferred settings. Lock the doors with the Intelligent Key. Each Intelligent Key may be set with the driver's individual preferences. When a new Intelligent Key is used, "Connection with the key has been done" will be displayed on the screen and the memorized settings are available.

To engage the memorized settings, perform the following:

1. Carry the Intelligent Key that is linked to the memorized settings.
2. Unlock the doors by pushing the driver's door handle request switch or the UNLOCK button on the Intelligent Key.
3. Place the ignition switch in the ON position. The settings linked to the Intelligent Key will start.

For additional information on using the Climate control system, refer to "Heater and air conditioner (automatic)" in the "Monitor, climate, audio, phone and voice recognition systems" section of this manual.

For additional information on using the Navigation System, refer to the separate Navigation System Owner's Manual.

For additional information on using the Audio system, refer to "Audio system" in the "Monitor, climate, audio, phone and voice recognition systems" section of this manual.

SYSTEM OPERATION

The automatic drive positioner system will not work or will stop operating under the following conditions:

- When the vehicle speed is above 4 mph (7 km/h).
- When any of the memory switches are pushed while the automatic drive positioner is operating.
- When the adjusting switch for the driver's seat is turned on while the automatic drive positioner is operating.
- When the seat has already been moved to the memorized position.
- When no seat position is stored in the memory switch.
- When the shift lever is moved from P (Park) to any other position.

4 Monitor, climate, audio, phone and voice recognition systems

Control panel buttons — color screen without Navigation System (if so equipped) 4-4
How to use the INFINITI controller 4-5
How to select menus on the screen 4-6
How to use the STATUS button 4-6
How to use the INFO button 4-7
How to use the DISP button 4-8
How to use the SETTING button 4-9
☼/☽ OFF button 4-10
Control panel buttons — color screen with Navigation System (if so equipped) 4-11
How to use the INFINITI controller 4-12
How to use the touch-screen 4-12
Menu options 4-14
How to select menus on the screen 4-15
How to use the STATUS button 4-15
How to use the INFO button 4-16
How to use the SETTING button 4-18
☼/☽ OFF button 4-20
Image viewer (if so equipped) 4-21
Using the image viewer 4-21
RearView Monitor (if so equipped) 4-23
RearView Monitor system operation 4-24
How to read the displayed lines 4-24
Difference between predicted and actual distances 4-25
How to park with predicted course lines 4-26
Adjusting the screen 4-28
How to turn on and off predicted course lines 4-28
RearView Monitor system limitations 4-28
System maintenance 4-29
Around View® Monitor (if so equipped) 4-30
Around View® Monitor system operation 4-31
Difference between predicted and actual distances 4-34
How to park with predicted course lines 4-36
How to switch the display 4-37
Adjusting the screen 4-38
Around View® Monitor system limitations 4-38
System maintenance 4-40
Camera Aiding Sonar (parking sensor) (if so equipped) 4-41
Moving Object Detection (MOD) (if so equipped) 4-43
MOD system operation 4-44
Turning MOD on and off 4-45
MOD system limitations 4-45

System maintenance 4-46
Vents 4-47
Heater and air conditioner (automatic) 4-48
Automatic operation 4-49
Manual operation 4-49
Operating tips. 4-50
CLIMATE setting screen. 4-51
Rear automatic air conditioning system. 4-53
Servicing air conditioner. 4-56
Audio system 4-56
Radio 4-56
FM radio reception 4-56
AM radio reception 4-57
Satellite radio reception 4-57
Audio operation precautions 4-57
FM/AM/SAT radio with compact disc (CD) player 4-72
Digital Versatile Disc (DVD) Player Operation (models with Navigation System) 4-80
USB (Universal Serial Bus) Connection Port (models without Navigation System) (if so equipped) 4-83
USB (Universal Serial Bus) Connection Port (models with Navigation System) (if so equipped) 4-84
iPod®* player operation without Navigation System (if so equipped) 4-88
iPod®* player operation with Navigation System (if so equipped) 4-90
USB/iPod® Charging Ports 4-94
Bluetooth® streaming audio (if so equipped) 4-95
CD care and cleaning 4-98
Steering wheel switch for audio control 4-99
Antenna 4-100
INFINITI Mobile Entertainment System (MES) (if so equipped) 4-101
System components 4-101
Before operating dual head restraint/ headrest DVD system 4-106
Playing a DVD (Digital Versatile Disc) 4-107
Operating tips. 4-112
Care and maintenance 4-112
Car phone or CB radio 4-113
Bluetooth® Hands-Free Phone System without Navigation System (if so equipped) 4-113

Regulatory Information 4-115
Using the system 4-115
Control buttons 4-117
Getting started 4-118
List of voice commands 4-119
Voice Adaptation (VA) mode 4-124
Manual control 4-125
Troubleshooting guide 4-126
Bluetooth® Hands-Free Phone System with Navigation System (if so equipped) 4-127
Regulatory Information 4-128
Voice commands 4-129
Connecting procedure 4-130
Vehicle Phonebook 4-131
Handset phonebook 4-133
Making a call 4-134
Receiving a call 4-135
During a call 4-136
Ending a call 4-136
Phone settings 4-137
Bluetooth® settings 4-137
Call volume 4-138
INFINITI Voice Recognition System (if so equipped) 4-139
INFINITI Voice Recognition Standard Mode. 4-139
Using the system 4-142
Before starting 4-142
Giving voice commands 4-142
INFINITI Voice Recognition Alternate Command Mode 4-147
Using the system 4-152
Speaker Adaptation function 4-154
Troubleshooting guide 4-155

CONTROL PANEL BUTTONS — COLOR SCREEN WITHOUT NAVIGATION SYSTEM (if so equipped)

⚠ WARNING

- **Positioning of the heating or air conditioning controls and display controls should not be done while driving in order that full attention may be given to the driving operation.**
- **Do not disassemble or modify this system. If you do, it may result in accidents, fire, or electrical shock.**
- **Do not use this system if you notice any abnormality, such as a frozen screen or lack of sound. Continued use of the system may result in accident, fire or electric shock.**
- **In case you notice any foreign object in the system hardware, spill liquid on it, or notice smoke or smell coming from it, stop using the system immediately. Ignoring such conditions may lead to accidents, fire or electrical shock. It is recommended that you visit an INFINITI retailer for servicing.**

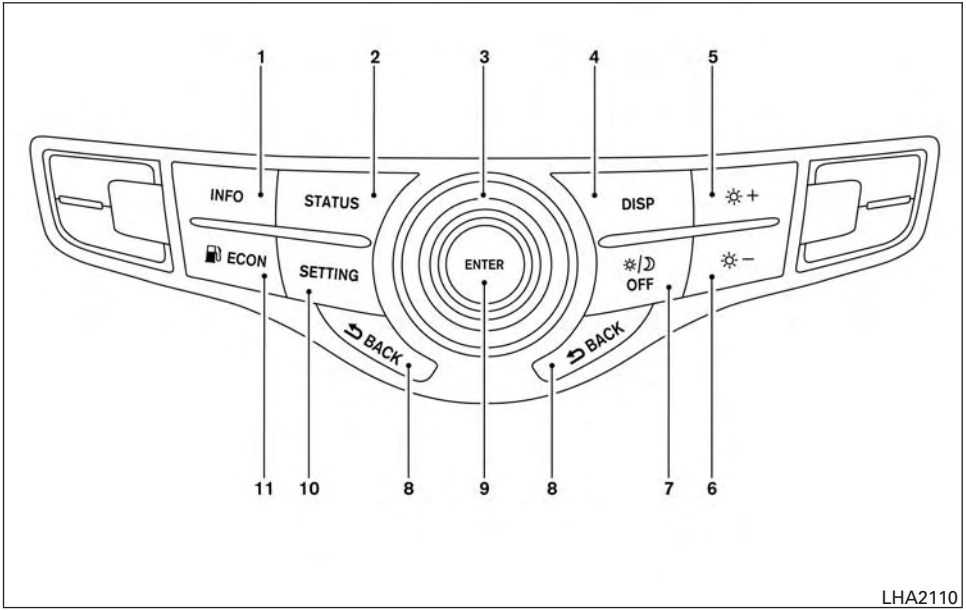

1. INFO button (P. 4-7)
2. STATUS button (P. 4-6)
3. INFINITI controller (P. 4-5)
4. DISP (display) button (P. 4-8)
5. + (brightness control) button
6. – (brightness control) button
7. ☼/☽ OFF brightness control button (P. 4-10)
8. ⮌ BACK (previous) button

9. ENTER button
10. SETTING button (P. 4-9)
11. ECON (fuel economy) button

CAUTION

- **The glass display screen may break if it is hit with a hard or sharp object. If the glass screen breaks, do not touch it. Doing so could result in an injury.**
- **To clean the display, never use a rough cloth, alcohol, benzine, thinner or any kind of solvent or paper towel with a chemical cleaning agent. They will scratch or deteriorate the panel.**
- **Do not splash any liquid such as water or car fragrance on the display. Contact with liquid will cause the system to malfunction.**

When you use this system, make sure the engine is running.

If you use the system with the engine not running (ignition ON or ACC) for a long time, it will discharge the battery, and the engine will not start.

Reference symbols:

ENTER button — This is a button on the control panel.

“Example” — Words marked in quotes refer to a key shown on the display. These keys can only be selected using the INFINITI controller.

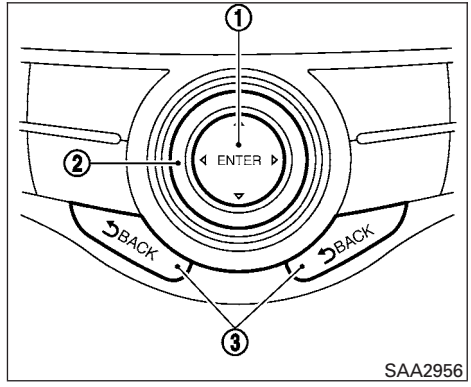

HOW TO USE THE INFINITI CONTROLLER

Choose an item on the display by rotating or pushing the center dial ② upward or downward. Press the ENTER button ① to select an item.

If you press either of the BACK buttons ③ before the operation is completed, the operation will be canceled and/or the display will return to the previous screen.

After the operation is complete, press either of the BACK buttons ③ to return to the previous screen.

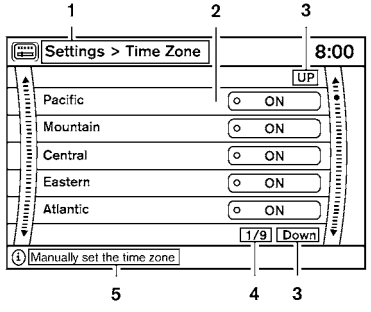

LHA1300

HOW TO SELECT MENUS ON THE SCREEN

Vehicle functions are viewed on the center display screen in menus. Whenever a menu selection is made or menu item is highlighted, different areas on the screen provide you with important information. See the following for details:

1. Header:
   Shows the path used to get to the current screen (for example, press the SETTING button > then select the “Clock” key, then select the “Time Zone” key).
2. Menu Selections:
   Shows the options to choose within that menu screen (for example, Pacific time zone, Mountain time zone, etc.).
3. UP/DOWN Movement Indicator:
   Shows that the INFINITI controller may be used to move UP/DOWN on the screen and select more options.
4. Screen Count:
   Shows the number of menu selections available for that screen (for example, 1/9).
5. Footer/Information Line:
   Provides more information (if available) about the menu selection currently highlighted (for example, manually set the time zone).

HOW TO USE THE STATUS BUTTON

To display the status of the audio, climate control system and fuel consumption, press the STATUS button.

The following information will appear when the STATUS button is pressed multiple times:

Audio → Audio and climate control system → Audio and fuel consumption → Audio

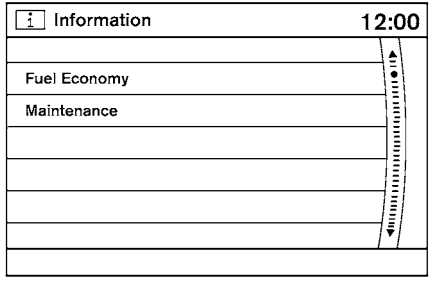

WHA1149

HOW TO USE THE INFO BUTTON

Press the INFO button. This screen sets or displays various information that is helpful for using the vehicle. Available items include fuel economy and maintenance information.

Menu Item			Result
Fuel Economy			Displays Fuel Economy menu.
	Distance to Empty (DTE)		Displays an estimation of the distance that the vehicle can be driven before refueling. The DTE is constantly calculated based on the amount of fuel in the fuel tank and actual fuel consumption. The display is updated every 30 seconds. When the fuel level is low, the DTE display will change to (*). **NOTE:** If the amount of fuel added while the ignition switch is OFF is small, the display just before the ignition switch is turned OFF may continue to be displayed. **NOTE:** When driving uphill or rounding curves, the fuel in the tank shifts, which may momentarily change the display.
	Average Fuel Economy		Displays the average fuel economy since the last reset. The display is updated every 30 seconds and 500 m (1/3 mi). After a reset or connecting the battery cables, the display might show (**.*).
	Resetting Fuel Economy		The average fuel economy calculation can be reset to 0. Press the INFO button and select the “Fuel Economy” key, then select the “Reset” key using the INFINITI controller and press the ENTER button.
	Fuel Economy Record		Select the “View” key to display the average fuel consumption history in a graph form.
Maintenance			Displays maintenance reminders.
	Reminder keys (1–4)		Select a key to display that maintenance interval.
		Reset Distance key	Resets the distance for the selected reminder to 0 mi (km).
		Interval key	Displays the interval for the selected reminder. Select the “+” or “-” keys to adjust the distance up or down.
		Interval Reminder key	Displays status of the selected interval reminder. Select to toggle on or off. If set to “On”, the maintenance notice screen will be displayed once the interval is met and the ignition switch is placed in the OFF and then ON position.

HOW TO USE THE DISP BUTTON

Press the DISP button. This screen displays various screen settings and functions that are available for your vehicle. Adjustments can be made using the INFINITI controller or the touch-screen display. When the amber indicator next to an item is illuminated, the feature is enabled.

While the vehicle is in the (P) Park position, the following settings may be changed:

Menu	Result
Display	Toggles the display screen on and off. The amber indicator is illuminated when the display is set to “On”. When the display is set to “Off” and a control panel, audio or heater and air conditioner button is pressed, the display will resume until that operation is finished. To turn the display back on, press and hold the ☼/☽ OFF button for approximately 2 seconds or return to the display setting screen and adjust the setting.
Brightness	Adjusts the brightness of the screen background.
Contrast	Adjusts the contrast of the screen background.
Background Color	Toggles the display screen between day and night mode.

While the vehicle is in the (R) Reverse position, the following settings may be changed:

Menu	Result
Brightness	Adjusts the brightness of the rear view display.
Tint	Adjusts the tint of the rear view display.
Color	Adjusts the color of the rear view display.
Contrast	Adjusts the contrast of the rear view display.
Black Level	Adjusts the black level of the rear view display.

NOTE:

Do not adjust any of the display settings while the vehicle is moving. Make sure the parking brake is firmly applied.

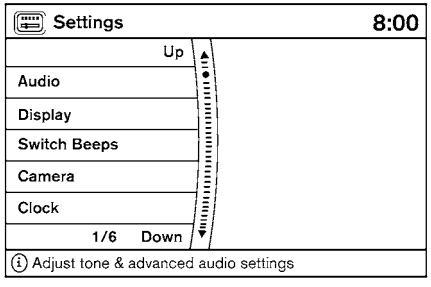

LHA1304

HOW TO USE THE SETTING BUTTON

Press the SETTING button. This screen displays and adjusts various settings and functions that are available for your vehicle. Use the INFINITI controller to select an item and then press the ENTER button. When the amber indicator next to an item is illuminated, the feature is enabled.

Menu Item		Result
Audio		For additional information, refer to “Audio system” in this section.
Display		Adjusts the settings for the display screen.
	Brightness/Contrast	Adjusts the brightness or contrast of the map background.
	Display off	Toggles the display screen on and off. The amber indicator is illuminated when the display is set to “On”. When the display is set to “Off” and a control panel, audio or heater and air conditioner button is pressed, the display will resume until that operation is finished. To turn the display back on, press and hold the ☼/☽ OFF button for approximately 2 seconds or return to the display setting screen and adjust the setting.
	Background Color	Adjusts the display screen between day and night mode.
Switch Beeps		Toggles on and off the beep sound that is heard when a control panel button is pressed.
Camera		Toggles the predicted course lines on or off when the rear view camera is displayed on screen. For additional information, refer to “RearView Monitor” in this section.
Clock		Adjusts the clock settings.

Menu Item		Result
	On-screen Clock	Toggles on or off the clock in the upper right corner of the display.
	Clock Format	Toggles between a 12–hour and 24–hour clock.
	Daylight Savings Time	Toggles on or off the daylight savings time.
	Time Zone	Adjusts the time zone. Choose a time zone from the available list.
	Adjust Clock	Manually adjusts the hours and minutes of the clock.
Language/Units		Select which settings you want to change using the INFINITI controller.
	Select Language	Select to change language that will be shown on the display.
	Select Units	Select the “US” (mi, °F, MPG) key or the “Metric” (km, °C, L/100 km) key to change the units shown on the display.

☼/☽ OFF BUTTON

To change the display brightness, press the ☼/☽ OFF button. Pressing the button again will change the display to the day AUTO or the night ☽ display. The brightness can then be adjusted using the INFINITI controller.
The display brightness can also be adjusted using the + (brighter) button or the – (dimmer) button.

If no operation is done within 10 seconds, the display will return to the previous display.

Press and hold the ☼/☽ OFF button for more than 2 seconds to turn the display off. Press the button again to turn the display on.

CONTROL PANEL BUTTONS — COLOR SCREEN WITH NAVIGATION SYSTEM (if so equipped)

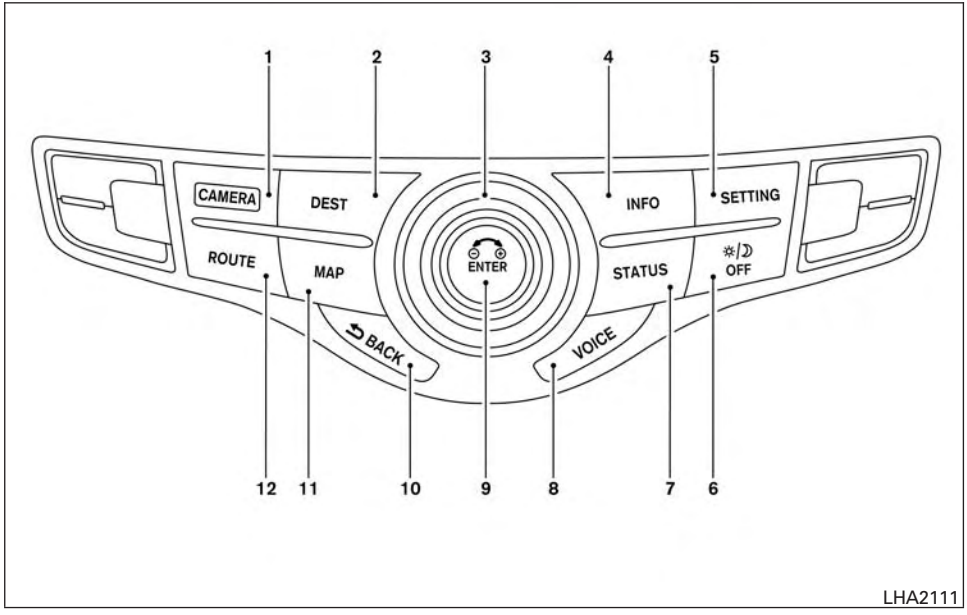

1. CAMERA button
2. DEST (destination) button*
3. INFINITI controller (P. 4-12)
4. INFO button (P. 4-16)
5. SETTING button (P. 4-18)
6. ☼/☽ OFF brightness control button (P. 4-20)
7. STATUS button (P. 4-15)
8. VOICE button*
9. ENTER button
10. ⮌ BACK (previous) button
11. MAP button*
12. ROUTE button*

*For Navigation system control buttons, refer to the separate Navigation System Owner's Manual.

When you use this system, make sure the engine is running.

If you use the system with the engine not running (ignition ON or ACC) for a long time, it will discharge the battery, and the engine will not start.

Reference symbols:

ENTER button — This is a button on the control panel.

"Example" — Words marked in quotes refer to a key shown only on the display. These keys can be selected by touching the screen or using the INFINITI controller.

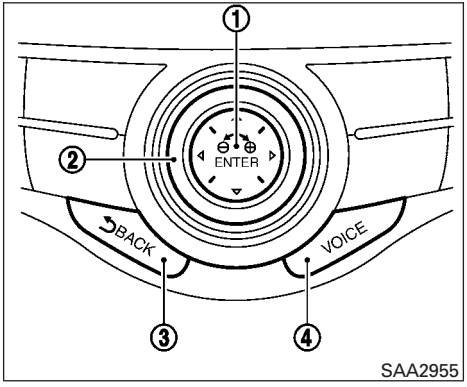

HOW TO USE THE INFINITI CONTROLLER

Choose an item on the display by rotating or pushing the center dial ② upward or downward. Press the ENTER button ① to select an item.

If you press either of the ⮌ BACK buttons ③ before the operation is completed, the operation will be canceled and/or the display will return to the previous screen.

After the operation is complete, press either of the ⮌ BACK buttons ③ to return to the previous screen.

For the VOICE button ④ functions, refer to the separate Navigation System Owner's Manual.

HOW TO USE THE TOUCH-SCREEN

⚠ CAUTION

- **The glass display screen may break if it is hit with a hard or sharp object. If the glass screen breaks, do not touch it. Doing so could result in an injury.**
- **To clean the display, never use a rough cloth, alcohol, benzine, thinner or any kind of solvent or paper towel with a chemical cleaning agent. They will scratch or deteriorate the panel.**
- **Do not splash any liquid such as water or car fragrance on the display. Contact with liquid will cause the system to malfunction.**

To help ensure safe driving, some functions cannot be operated while driving.

The on-screen functions that are not available while driving will be "grayed out" or muted.

Park the vehicle in a safe location and then operate the navigation system.

⚠ WARNING

- **ALWAYS give your full attention to driving.**
- **Avoid using vehicle features that could distract you. If distracted, you could lose control of your vehicle and cause an accident.**

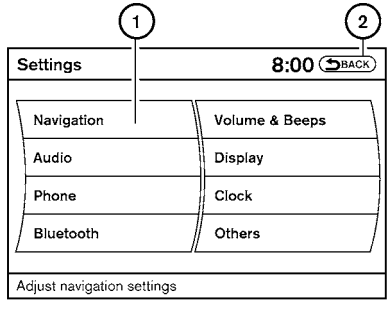

LHA1227

Touch-screen operation

With this system, the same operations as those for the INFINITI controller are possible using the touch-screen operation.

Menu Item		Result
Selecting the item		Touch an item to select. To select the “Navigation” key, touch the “Navigation” key ① on the screen. Touch the “ ↩ BACK” key ② to return to the previous screen.
Adjusting the item		Touch the “+” key or the “−” key to adjust the settings of an item. Touch the up arrow to scroll up the page one item at a time or touch the double up arrow to scroll up an entire page. Touch the down arrow to scroll down the page one item at a time or touch the double down arrow to scroll down an entire page.
Inputting characters		Touch the letter or number key. There are some options available when inputting characters.
	Uppercase	Shows uppercase characters.
	Lowercase	Shows lowercase characters.
	Space	Inserts a space.
	Delete	Deletes the last inputted character with one touch. Touch and hold the “Delete” key to delete all of the characters.
	OK	Completes the character input.

Touch-screen maintenance

If you clean the display screen, use a dry, soft cloth. If additional cleaning is necessary, use a small amount of neutral detergent with a soft cloth. Never spray the screen with water or detergent. Dampen the cloth first, and then wipe the screen.

MENU OPTIONS

The start menu can be displayed using the menu control switch/ENTER button on the steering wheel controls.

1. While the MAP or STATUS screen is displayed, press and hold the menu control switch/ENTER button until the “Menu Options” screen appears.
2. Highlight the preferred item by tilting the menu control switch up or down. Press the menu control switch/ENTER button to select the highlighted item.

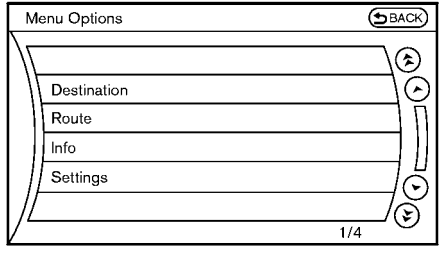

SAA2476

Available items

Destination/Route

These items are for the navigation system. For additional information, refer to the separate Navigation System Owner’s Manual.

Info

Displays the information screen. It is the same screen that appears when you press the INFO button.

Settings

Displays the settings screen. It is the same screen that appears when you press the SETTING button.

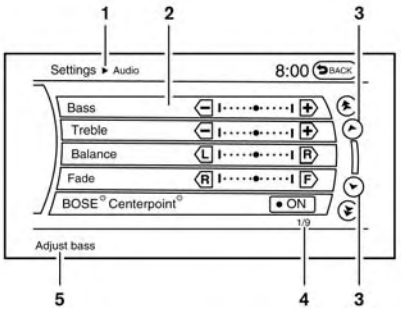

LHA2178

HOW TO SELECT MENUS ON THE SCREEN

Vehicle functions are viewed on the center display screen in menus. Whenever a menu selection is made or menu item is highlighted, different areas on the screen provide you with important information. See the following for details.

1. Header:
   Shows the path used to get to the current screen (for example, press the SETTING button > then select the “Audio” key).
2. Menu Selections:
   Shows the options to choose within that menu screen (for example, Bass, etc.).
3. Up/Down Movement Indicator:
   Shows that the INFINITI controller may be used to move up or down on the screen and select more options.
4. Screen Count:
   Shows the number of menu selections available for the current menu, even if they are on multiple pages (for example, 1/9).
5. Footer/Information Line:
   Provides more information (if available) about the menu selection currently highlighted (for example, Adjust bass).

HOW TO USE THE STATUS BUTTON

The STATUS button is used to display system information. Three different split screens of information are available. Press the STATUS button multiple times to cycle through these screens as follows:

Audio with Turn Information for Navigation → Audio with Fuel Economy Information → Audio with Climate Control Information → Audio with Turn Information for Navigation

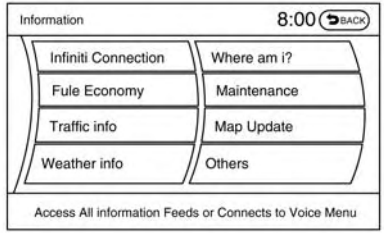

LHA2172

HOW TO USE THE INFO BUTTON

Press the INFO button. This screen sets or displays various information that is helpful for using the vehicle. Available items include fuel economy, maintenance, navigation and voice recognition information.

Menu Item		Result
Infiniti Connection		For additional information on the Infiniti Connection system, refer to the separate Navigation System Owner's Manual.
Fuel Economy		Displays Fuel Economy menu.
	Distance to Empty (DTE)	Displays an estimation of the distance that the vehicle can be driven before refueling. The DTE is constantly calculated based on the amount of fuel in the fuel tank and actual fuel consumption. The display is updated every 30 seconds. When the fuel level is low, the DTE display will change to (*). **NOTE:** If the amount of fuel added while the ignition switch is OFF is small, the display just before the ignition switch is turned OFF may continue to be displayed. **NOTE:**When driving uphill or rounding curves, the fuel in the tank shifts, which may momentarily change the display.
	Average Fuel Economy	Displays the average fuel economy since the last reset. The display is updated every 30 seconds and 1/3 mi (500 m). After a reset or connecting the battery cables, the display might show (**.*). Select "Reset Fuel Eco" to reset the fuel economy calculation to 0.
	Resetting fuel economy	The average fuel economy calculation can be reset to 0. Press the INFO button and select the "Fuel Economy" key, then select the "Reset Fuel Eco" key using the INFINITI controller.
	Fuel Economy Record	Press the INFO button, then select the "Fuel Economy" key, then select the "Fuel Eco History" key using the INFINITI controller. The average fuel consumption history will be displayed in a graph form along with the average fuel for the previous Reset-to-Reset period.
Traffic Info		For additional information, refer to the separate Navigation System Owner's Manual.
Weather Info		For additional information, refer to the separate Navigation System Owner's Manual.
Where am I?		For additional information, refer to the separate Navigation System Owner's Manual.
Maintenance		Displays maintenance reminders.
	Reminder keys	Select a key to display the maintenance interval for engine oil, oil filter, tire or other reminder.

Menu Item		Result
	Reset Distance	Resets the distance for the selected reminder to 0 mi (km).
	Interval	Displays the interval for the selected reminder. Select the “+” or “-” keys to adjust the distance up or down.
	Interval Reminder	Displays status of the selected interval reminder. Select to toggle on or off. If set to “On”, the maintenance notice screen will be displayed once the interval is met and the ignition switch is placed in the OFF and then ON position.
Map Update		For additional information, refer to the separate Navigation System Owner’s Manual.
Others		Displays a list of further options.
	Map Update	For additional information regarding Map Updates, refer to the separate Navigation System Owner’s manual.
	Navigation Version	For additional information regarding Navigation Version, refer to the separate Navigation System Owner’s manual.
	GPS Position	For additional information regarding GPS Position, refer to the separate Navigation System Owner’s manual.
	Voice Recognition	For additional information on Voice Recognition settings, refer to “INFINITI Voice Recognition system” in this section.

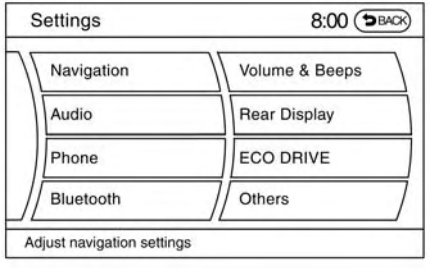

LHA2152

HOW TO USE THE SETTING BUTTON

Press the SETTING button. This screen displays and adjusts various settings and functions that are available for your vehicle. When the amber indicator next to an item is illuminated, the feature is enabled.

Menu Item		Result
Navigation		For additional information, refer to the separate Navigation System Owner's Manual.
Audio		For additional information, refer to "Audio system" in this section.
Phone		For additional information, refer to "Bluetooth® Hands-Free Phone System with Navigation System" in this section.
Bluetooth		For additional information, refer to "Bluetooth® Hands-Free Phone System with Navigation System" in this section.
Volume & Beeps		Adjusts the volume and beep settings.
	Navigation volume	For additional information, refer to the separate Navigation System Owner's Manual.
	Phone Volume	For additional information, refer to "Bluetooth® Hands-Free Phone System with Navigation System" in this section.
	Infiniti Connection Volume	For additional information, refer to the separate Navigation System Owner's Manual.
	Switch Beeps	Toggles ON or OFF the beep sound that is heard when a control panel button is pressed.
Display		Adjusts the settings for the display screen.
Rear display (if so equipped)		Adjusts the settings for the rear display screens.

Menu Item			Result
	Display Control		Select the “ON” key for either the left or right display to alternately enable or disable the display fo the left or right rear passengers. If the display is enabled, select the key (DVD, USB, front AUX or rear AUX) that you wish to have displayed on the corresponding screen. The front AUX setting is for devices plugged into the AUX jacks in the center console. The rear AUX setting is for the devices plugged into the AUX jacks on the back of the center console.
	Auto Display		Toggles ON or OFF the Auto Display option. When Auto Display is ON, the rear displays will automatically turn on when a movie is played from a DVD or USB device.
	Rear Speaker		Toggles ON or OFF the Rear Speaker volume.
ECO DRIVE (if so equipped)			To adjust the ECO pedal driver’s assist, select the “Standard”, “Soft” or “OFF” key and adjust it with the INFINITI controller. For additional information about ECO DRIVE system, refer to “ECO pedal system” in the “Starting and driving” section of this manual.
Others			Select the “Others” key using the INFINITI controller. The voice recognition, language and units setting screen will be displayed.
	Clock		Press the SETTING button, the select the “Clock” key using the INFINITI controller to adjust the clock settings.
		On-screen Clock	When this item is enabled (indicator light illuminated), a clock is always displayed in the upper right corner of the screen. This clock will indicate the time almost exactly because it is always adjusted by the GPS system.
		Clock Format (24h)	When this item is enabled (indicator light illuminated), the clock format will change from the default 12–hour display to a 24–hour display.
		Offset (hour)	Adjust the time by increasing or decreasing the hours.
		Offset (minute)	Adjust the time by increasing or decreasing the minutes.
		Daylight Savings Time	When this item is enabled (indicator light illuminated), daylight savings time is on. To turn off the daylight savings time, touch the “ON” key; the amber indicator light will go out.
		Time Zone	Adjust the time zone. Choose a time from the available list on the display.
	Display Adjustment		To adjust the display settings, select the “Display Adjustment” key. The following settings are available:
		Brightness/ Contrast	Adjusts the brightness or contrast of the map background.
		Display off	Toggles the display screen on and off. The amber indicator is illuminated when the display is set to “On”. When the display is set to “Off” and a control panel, audio or heater and air conditioner button is pressed, the display will resume until that operation is finished. To turn the display back on, press and hold the ☼/☽ OFF button for approximately 2 seconds or return to the display setting screen and adjust the setting.
		Background Color	Adjusts the display screen between day and night mode.

Menu Item			Result
	Color Theme		Changes the color of the background, arrows and bars on the screen. Choose between “Black”, “Brown”, or “Silver”.
	Language/Units		Select which settings you want to change using the INFINITI controller.
		Select Language	Select to change language that will be shown on the display.
		Select Units	Select the “US” (mi, °F, MPG) key or the “Metric” (km, °C, L/100 km) key to change the units shown on the display.
	Voice Recognition		For additional information on Voice Recognition settings, refer to “INFINITI Voice Recognition System” in this section.
	Camera Settings		Select the “Camera” key. The Camera Settings screen will appear. When this option is on (indicator light illuminated), the predicted course lines will be displayed when the RearView Monitor is displayed on the screen. For additional information, refer to “RearView Monitor” in this section.
	Image Viewer		For additional information about these settings, refer to “Image Viewer” in this section.

☼/☽ OFF BUTTON

To change the display brightness, press the ☼/☽ OFF button. Pressing the button again will change the display to the day AUTO or the night ☽ display. The brightness can then be adjusted using the INFINITI controller.
If no operation is performed within 5 seconds, the display will return to the previous display.

Press and hold the ☼/☽ OFF button for more than 2 seconds to turn the display off. Press the button again to turn the display on.

USING THE IMAGE VIEWER

When a compatible portable storage device is plugged into the USB connection port located in the center console, compatible image files stored on the device can be viewed on the control panel display.

Connecting the portable storage device

To connect a portable storage device to the system so that images stored on it can be viewed, insert the device into the USB connection port located in the center console.

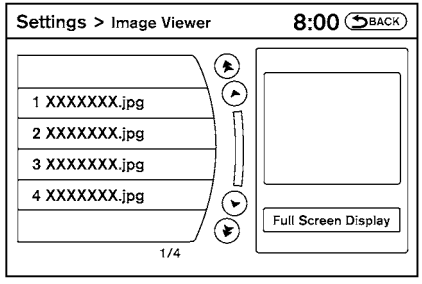

LHA1309

Viewing images

To view an image, press the SETTING button and then select the “Image Viewer” key with the INFINITI controller. The Image Viewer screen will be displayed.

A list of compatible images on the storage device is displayed on the left side of the screen, while the selected image is displayed on the right side of the screen. To choose a different picture from the list, use the INFINITI controller to scroll through the list once the desired image is highlighted.

Select the “Full Screen Display” key and press the ENTER button to view a full screen version of the image.

Image requirements

- Image type: JPEG
- File extensions: *.jpg, *.jpeg
- Maximum resolution: 2048 x 1536
- Maximum size: 2 MB
- Colors: 32,768 (15-bit)
- Maximum file name length: 253 bytes (display only shows first 8 characters)
- Maximum folders: 500
- Maximum images per folder: 1,024

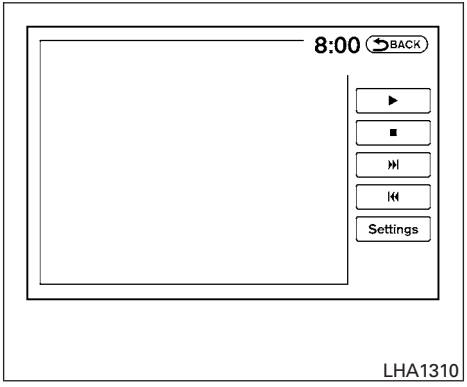

Viewing images in a slideshow

To view all of the images on the device in a slideshow, first enter the full screen mode while viewing one of the images. The slideshow control buttons are located on the right side of the screen.

Select the play key ▶ to begin the slideshow. The images shown on the screen will periodically change at a given interval of time. To skip through the images without waiting for them to change automatically, select the ⏮ key to skip backward or the ⏭ key to skip forward. Select the stop key ■ to end the slideshow and return to the full screen display of the image currently on the screen.

Slideshow settings

While in slideshow mode, the following settings can be accessed:

Settings			
	Slideshow Speed		Changes the frequency at which images are changed during a slideshow. Choose one of the options on the screen or “No Auto Change” to have the images not change automatically.
	Slideshow Order		
		Random	Changes images in a random order when selected.
		Order List	Changes images in the order in which they are saved on the USB device.

REARVIEW MONITOR (if so equipped)

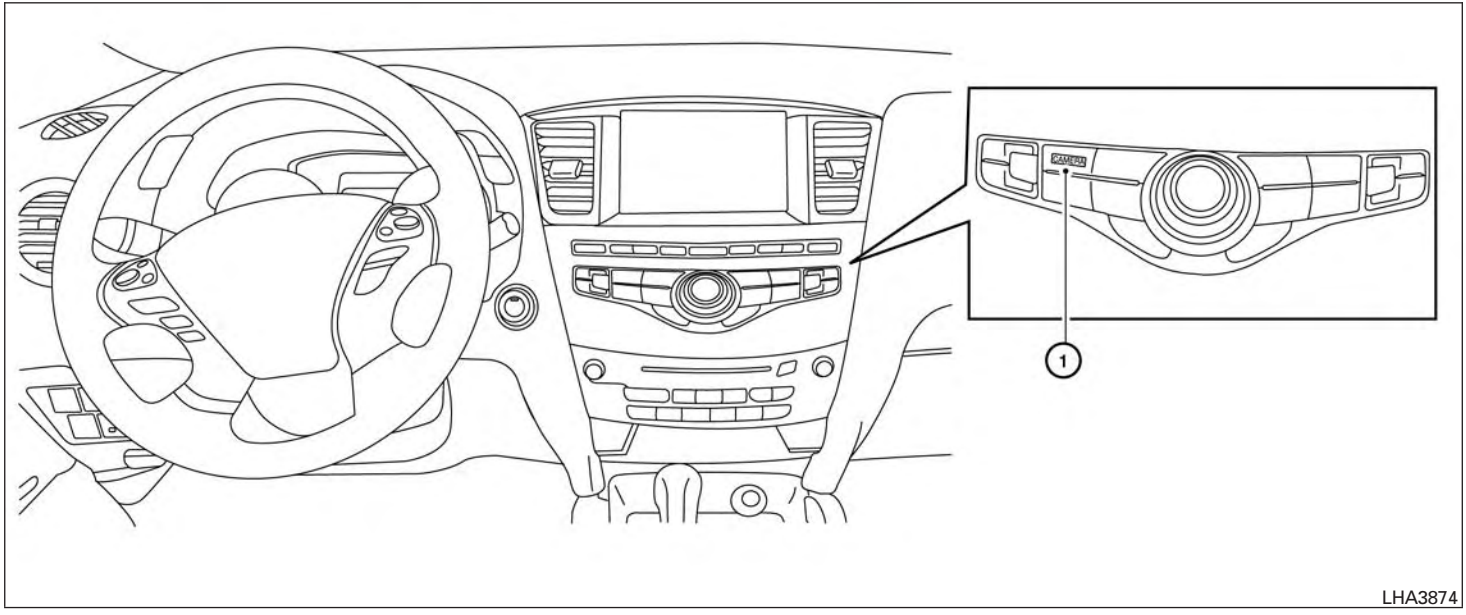

1. CAMERA button (if so equipped)

⚠ WARNING

- **Failure to follow the warnings and instructions for proper use of the RearView Monitor system could result in serious injury or death.**

- **RearView Monitor is a convenience feature and is not a substitute for proper backing. Always turn and look out the windows and check mirrors to be sure that it is safe to move before operating the vehicle. Always back up slowly.**

- **The system is designed as an aid to the driver in showing large stationary objects directly behind the vehicle, to help avoid damaging the vehicle.**
- **The distance guide line and the vehicle width line should be used as a reference only when the vehicle is on a level paved surface. The distance viewed on the monitor is for reference only and may be different than the actual distance between the vehicle and displayed objects.**

⚠ CAUTION

Do not scratch the camera lens when cleaning dirt or snow from the front of the camera.

The RearView Monitor system automatically shows a rear view of the vehicle when the shift lever is shifted into the R (Reverse) position or when the CAMERA button (if so equipped) is pressed. The radio can still be heard while the RearView Monitor is active.

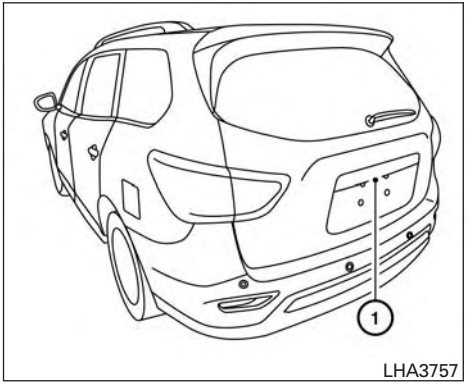

LHA3757

To display the rear view, the RearView Monitor system uses a camera located just above the vehicle's license plate ①.

REARVIEW MONITOR SYSTEM OPERATION

With the ignition switch in the ON position, move the shift lever to the R (Reverse) position or press the CAMERA button (if so equipped) to operate the RearView Monitor.

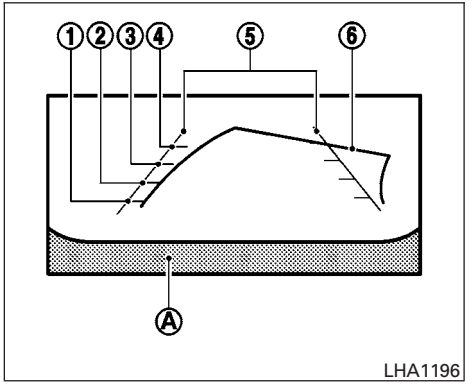

LHA1196

HOW TO READ THE DISPLAYED LINES

Guiding lines which indicate the vehicle width and distances to objects with reference to the vehicle body line Ⓐ are displayed on the monitor.

Distance guide lines

Indicate distances from the vehicle body.

- Red line ①: approx. 1.5 ft (0.5 m)
- Yellow line ②: approx. 3 ft (1 m)
- Green line ③: approx. 7 ft (2 m)
- Green line ④: approx. 10 ft (3 m)

Vehicle width guide lines ⑤

Indicate the vehicle width when backing up.

Predicted course lines ⑥

Indicate the predicted course when backing up. The predicted course lines will be displayed on the monitor when the shift lever is in the R (Reverse) position and the steering wheel is turned. The predicted course lines will move depending on how much the steering wheel is turned and will not be displayed while the steering wheel is in the straight-ahead position.

The vehicle width guide lines and the width of the predicted course lines are wider than the actual width and course.

DIFFERENCE BETWEEN PREDICTED AND ACTUAL DISTANCES

The displayed guidelines and their locations on the ground are for approximate reference only. Objects on uphill or downhill surfaces or projecting objects will be actually located at distances different from those displayed in the monitor relative to the guidelines (refer to illustrations). When in doubt, turn around and view the objects as you are backing up, or park and exit the vehicle to view the positioning of objects behind the vehicle.

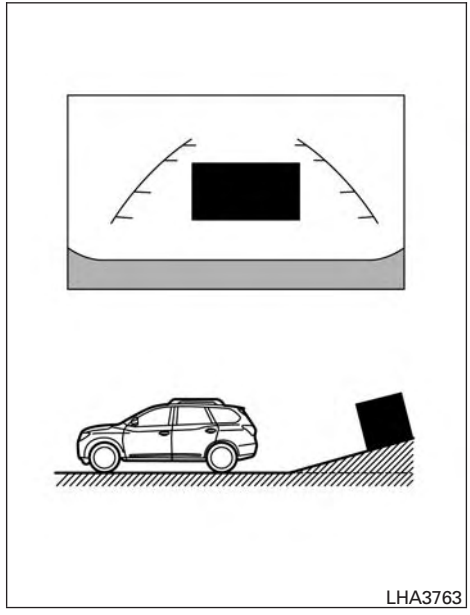

Backing up on a steep uphill

When backing up the vehicle up a hill, the distance guide lines and the vehicle width guide lines are shown closer than the actual distance. Note that any object on the hill is further than it appears on the monitor.

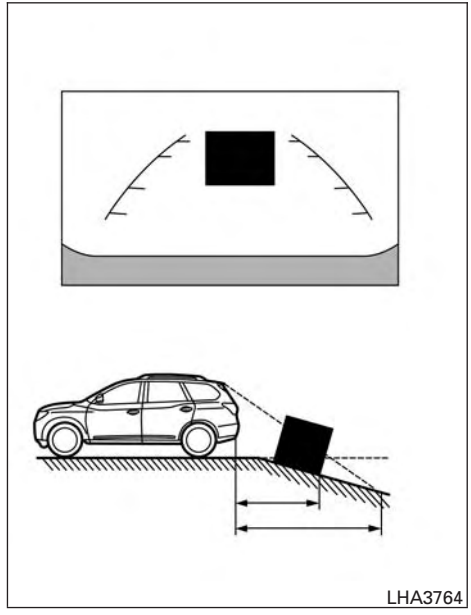

Backing up on a steep downhill

When backing up the vehicle down a hill, the distance guide lines and the vehicle width guide lines are shown farther than the actual distance. Note that any object on the hill is closer than it appears on the monitor.

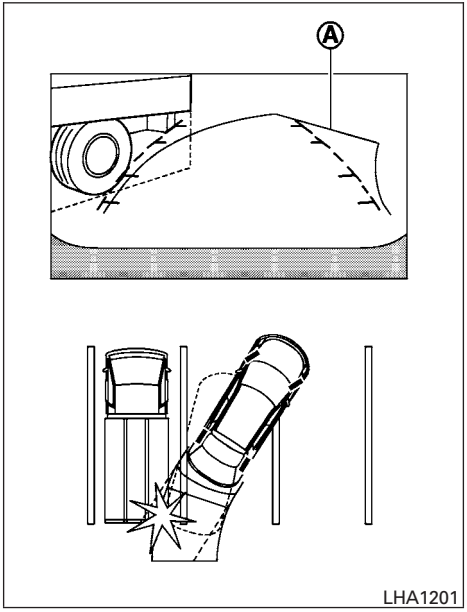

Backing up near a projecting object

The predicted course lines Ⓐ do not touch the object in the display. However, the vehicle may hit the object if it projects over the actual backing up course.

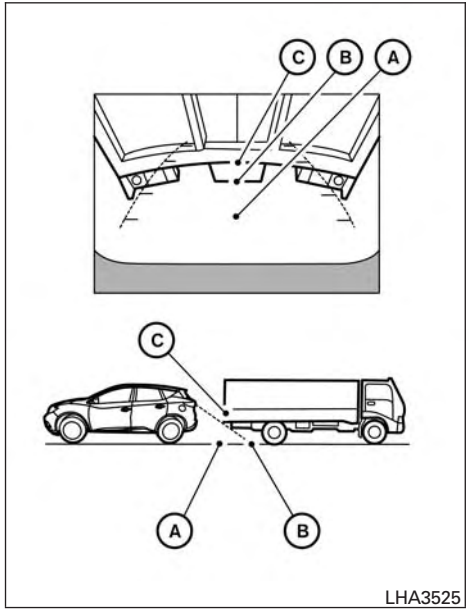

Backing up behind a projecting object

The position Ⓒ is shown farther than the position Ⓑ in the display. However, the position Ⓒ is actually at the same distance as the position Ⓐ. The vehicle may hit the object when backing up to the position Ⓐ if the object projects over the actual backing up course.

HOW TO PARK WITH PREDICTED COURSE LINES

⚠WARNING

- **If the tires are replaced with different sized tires, the predicted course lines may be displayed incorrectly.**
- **On a snow-covered or slippery road, there may be a difference between the predicted course line and the actual course line.**
- **If the battery is disconnected or becomes discharged, the predicted course lines may be displayed incorrectly. If this occurs, please perform the following procedures:**
  - **Turn the steering wheel from lock to lock while the engine is running.**
  - **Drive the vehicle on a straight road for more than 5 minutes.**
- **When the steering wheel is turned with the ignition switch in the ACC position, the predicted course lines may be displayed incorrectly.**

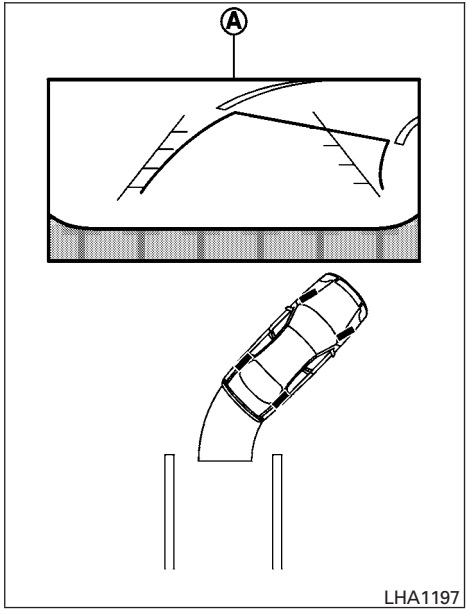

1. Visually check that the parking space is safe before parking your vehicle.
2. The rear view of the vehicle is displayed on the screen Ⓐ when the shift lever is moved to the R (Reverse) position.

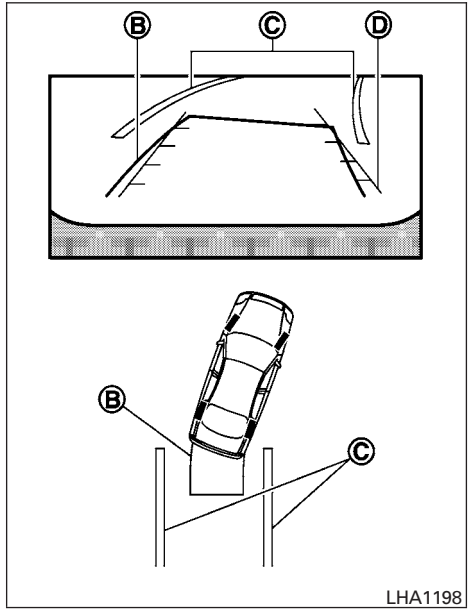

3. Slowly back up the vehicle adjusting the steering wheel so that the predicted course lines Ⓑ enter the parking space Ⓒ.
4. Maneuver the steering wheel to make the vehicle width guide lines Ⓓ parallel to the parking space Ⓒ while referring to the predicted course lines.
5. When the vehicle is parked in the space completely, move the shift lever to the P (Park) position and apply the parking brake.

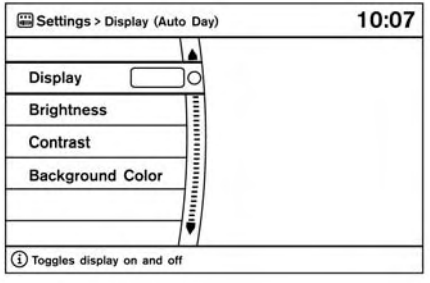

LHA3834

ADJUSTING THE SCREEN

To adjust the Display ON/OFF, Brightness, Tint, Color, Contrast and Black Level of the RearView Monitor, press the SETTING button with the RearView Monitor on and select the “Display” key. Select one of the items and change the value by touching the “+” or “-” key or by turning the INFINITI controller.

NOTE:

Do not adjust the Brightness, Tint, Color, Contrast and Black Level of the RearView Monitor while the vehicle is moving. Make sure the parking brake is firmly applied.

HOW TO TURN ON AND OFF PREDICTED COURSE LINES

To toggle ON and OFF the predicted course lines while in the P (Park) position:

1. Press the SETTING button.
2. Select the Camera key.
3. Select the Predicted Course Lines key to turn the feature ON or OFF.

To toggle ON and OFF the predicted course lines while in the R (Reverse) position:

1. Press the SETTING button.
2. Select the Settings key.
3. Select the Predicted Course Lines key to turn the feature ON or OFF.

REARVIEW MONITOR SYSTEM LIMITATIONS

⚠ WARNING

Listed below are the system limitations for RearView Monitor. Failure to operate the vehicle in accordance with these system limitations could result in serious injury or death.

- **The system cannot completely eliminate blind spots and may not show every object.**
- **Underneath the bumper and the corner areas of the bumper cannot be viewed on the RearView Monitor because of its monitoring range limitation. The system will not show small objects below the bumper, and may not show objects close to the bumper or on the ground.**
- **Objects viewed in the RearView Monitor differ from actual distance because a wide-angle lens is used.**
- **Objects in the RearView Monitor will appear visually opposite compared to when viewed in the rearview and outside mirrors.**

- **Use the displayed lines as a reference. The lines are highly affected by the number of occupants, fuel level, vehicle position, road conditions and road grade.**
- **Make sure that the liftgate is securely closed when backing up.**
- **Do not put anything on the rearview camera. The rearview camera is installed above the license plate.**
- **When washing the vehicle with high pressure water, be sure not to spray it around the camera. Otherwise, water may enter the camera unit causing water condensation on the lens, a malfunction, fire or an electric shock.**
- **Do not strike the camera. It is a precision instrument. Otherwise, it may malfunction or cause damage resulting in a fire or an electric shock.**

The following are operating limitations and do not represent a system malfunction:

- When the temperature is extremely high or low, the screen may not clearly display objects.
- When strong light directly shines on the camera, objects may not be displayed clearly.
- Vertical lines may be seen in objects on the screen. This is due to strong reflected light from the bumper.
- The screen may flicker under fluorescent light.
- The colors of objects on the RearView Monitor may differ somewhat from the actual color of objects.
- Objects on the monitor may not be clear in a dark environment.
- There may be a delay when switching between views.
- If dirt, rain or snow accumulate on the camera, RearView Monitor may not display objects clearly. Clean the camera.
- Do not use wax on the camera lens. Wipe off any wax with a clean cloth dampened with a diluted mild cleaning agent, then wipe with a dry cloth.

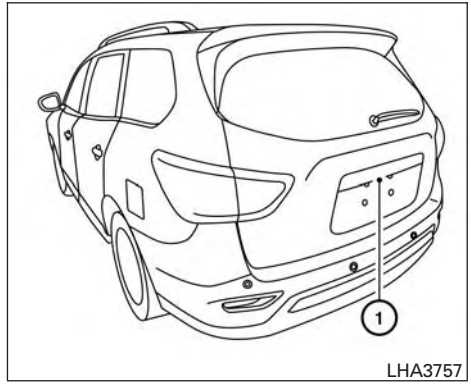

LHA3757

SYSTEM MAINTENANCE

⚠ CAUTION

- **Do not use alcohol, benzine or thinner to clean the camera. This will cause discoloration.**
- **Do not damage the camera as the monitor screen may be adversely affected.**

If dirt, rain or snow accumulates on the camera ①, the RearView Monitor may not display objects clearly. Clean the camera by wiping it with a cloth dampened with a diluted mild cleaning agent and then wiping it with a dry cloth.

AROUND VIEW® MONITOR (if so equipped)

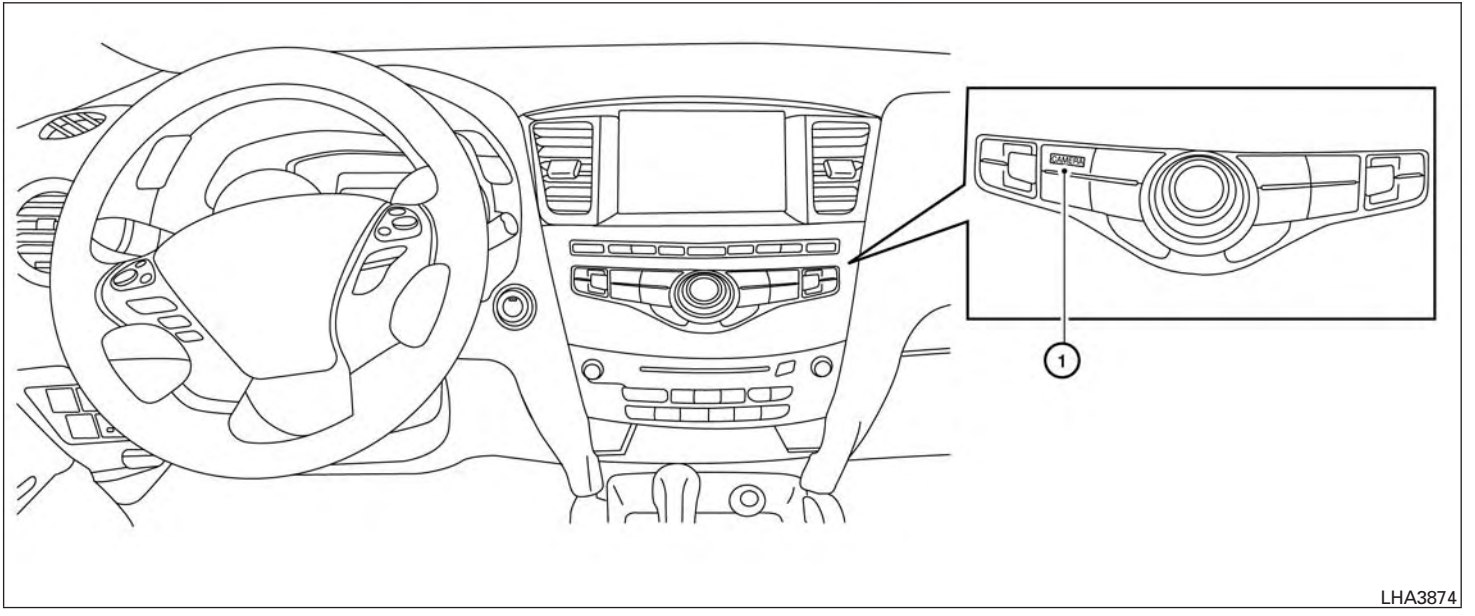

1. CAMERA button

⚠ WARNING

- **Failure to follow the warnings and instructions for the proper use of the Around View® Monitor system could result in serious injury or death.**
- **The Around View® Monitor is a convenience feature and is not a substitute for proper vehicle operation because it has areas where objects cannot be viewed. The four corners of the vehicle in particular, are areas where objects do not always appear in the bird's-eye, front, or rear views. Always check your surroundings to be sure that it is safe to move before operating the vehicle. Always operate the vehicle slowly.**
- **The driver is always responsible for safety during parking and other maneuvers.**

⚠ CAUTION

Do not scratch the camera lens when cleaning dirt or snow from the front of the camera.

The Around View® Monitor system is designed as an aid to the driver in situations such as slot parking or parallel parking.

The monitor displays various views of the position of the vehicle in a split screen format. Not all views are available at all times.

Available views:

- Front View
  An approximately 150–degree view of the front of the vehicle.
- Rear View
  An approximately 150–degree view of the rear of the vehicle.
- Bird's-Eye View
  The surrounding views of the vehicle from above.
- Front-Side View
  The view around and ahead of the front passenger's side wheel.
- Front-Wide View
  An approximately 180–degree view of the front the vehicle.
- Rear-Wide View
  An approximately 180–degree view of the rear of the vehicle.

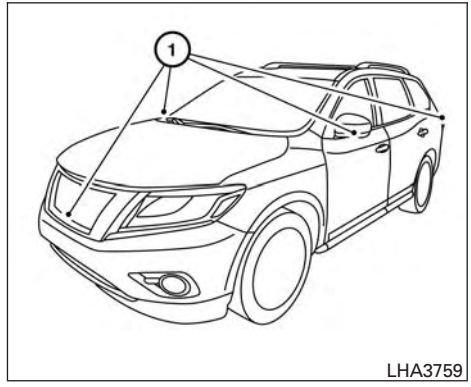

LHA3759

To display the multiple views, the Around View® Monitor system uses cameras located in the front grille, on the vehicle's outside mirrors and one just above the vehicle's license plate ①.

AROUND VIEW® MONITOR SYSTEM OPERATION

With the ignition switch in the ON position, move the shift lever to the R (Reverse) position or press the CAMERA button to operate the Around View® Monitor.

When the camera is first activated with the bird's-eye view in the display, a red icon (if so equipped) will flash on the screen. This indicates that the sonar system is activated. For additional informa-

tion on the rear sonar system, refer to “Front and Rear Sonar System” in the “Starting and driving” section of this manual.

The screen displayed on the Around View® Monitor will automatically return to the previous screen 3 minutes after the CAMERA button has been pressed with the shift lever in a position other than the R (Reverse) position.

Available views

⚠ WARNING

- **The distance guide lines and the vehicle width lines should be used as a reference only when the vehicle is on a paved, level surface. The apparent distance viewed on the monitor may be different than the actual distance between the vehicle and displayed objects.**
- **Use the displayed lines and the bird’s-eye view as a reference. The lines and the bird’s-eye view are greatly affected by the number of occupants, cargo, fuel level, vehicle position, road condition and road grade.**
- **If the tires are replaced with different sized tires, the predicted course lines and the bird’s-eye view may be displayed incorrectly.**
- **When driving the vehicle up a hill, objects viewed in the monitor are further than they appear. When driving the vehicle down a hill, objects viewed in the monitor are closer than they appear.**
- **Objects in the rear view will appear visually opposite compared to when viewed in the monitor and outside mirrors.**
- **Use the mirrors or actually look to properly judge distances to other objects.**
- **On a snow-covered or slippery road, there may be a difference between the predicted course lines and the actual course line.**
- **The vehicle width and predicted course lines are wider than the actual width and course.**
- **The displayed lines will appear slightly off to the right, because the rearview camera is not installed in the rear center of the vehicle.**

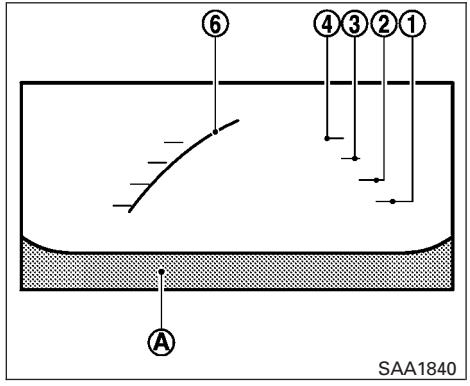

Front view

Front and rear view

Guiding lines that indicate the approximate vehicle width and distance to objects with reference to the vehicle body line Ⓐ are displayed on the monitor.

Distance guide lines

Indicate distances from the vehicle body:

- Red line ①: approximately 1.5 ft (0.5 m)
- Yellow line ②: approximately 3 ft (1 m)
- Green line ③: approximately 7 ft (2 m)
- Green line ④: approximately 10 ft (3 m)

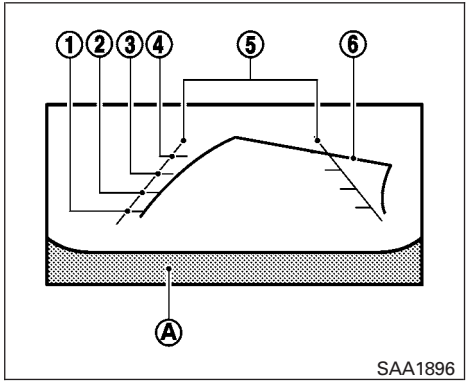

Rear view

Vehicle width guide lines ⑤:

Indicate the approximate vehicle width when backing up.

Predicted course lines ⑥:

Indicate the predicted course when operating the vehicle. The predicted course lines will be displayed on the monitor when the steering wheel is turned. The predicted course lines will move depending on how much the steering wheel is turned and will not be displayed while the steering wheel is in the straight-ahead position.

The front view will not be displayed when the vehicle speed is above 6 mph (10 km/h).

NOTE:

When the monitor displays the front view and the steering wheel turns about 90 degrees or less from the straight-ahead position, both the right and left predicted course lines ⑥ are displayed. When the steering wheel turns about 90 degrees or more, a line is displayed only on the opposite side of the turn.

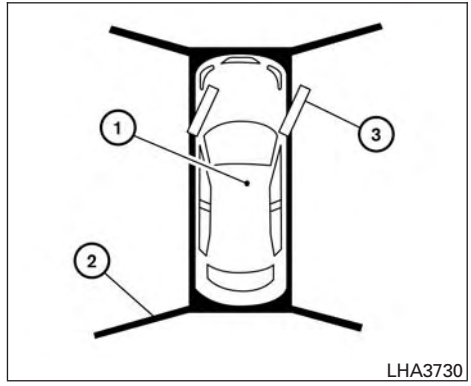

Bird's-eye view

The bird's-eye view shows the overhead view of the vehicle, which helps confirm the vehicle position and the predicted course to a parking space.

The vehicle icon ① shows the position of the vehicle. Note that the apparent distance between objects viewed in the bird's-eye view may differ somewhat from the actual distance to the vehicle.

The areas that the cameras cannot cover ② are indicated in black.

The non-viewable area ② is highlighted in yellow for several seconds after the bird's-eye view is displayed. It will be shown only the first time after the ignition switch is placed in the ON position.

The driver can check the approximate direction and angle of the tire on the display by the tire icon ③ when driving the vehicle forward or backward.

⚠ WARNING

- **Objects in the bird's-eye view will appear further than the actual distance.**
- **Tall objects, such as a curb or vehicle, may be misaligned or not displayed at the seam of the views.**
- **Objects that are above the camera cannot be displayed.**
- **The view of the bird's-eye view may be misaligned when the camera position alters.**
- **A line on the ground may be misaligned and is not seen as being straight at the seam of the views. The misalignment will increase as the line proceeds away from the vehicle.**
- **Tire angle display does not indicate the actual tire angle.**

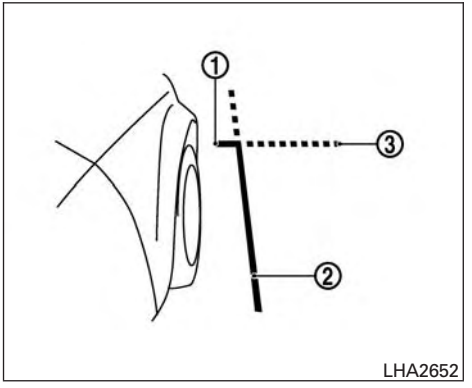

Front-side view

Guiding lines

Guiding lines that indicate the approximate width and the front end of the vehicle are displayed on the monitor.

The front-of-vehicle line ① shows the front part of the vehicle.

The side-of-vehicle line ② shows the approximate vehicle width including the outside mirrors.

The extensions ③ of both the front ① and side ② lines are shown with a green dotted line.

DIFFERENCE BETWEEN PREDICTED AND ACTUAL DISTANCES

The displayed guidelines and their locations on the ground are for approximate reference only. Objects on uphill or downhill surfaces or projecting objects will be actually located at distances different from those displayed in the monitor relative to the guidelines (refer to illustrations). When in doubt, turn around and view the objects as you are backing up, or park and exit the vehicle to view the positioning of objects behind the vehicle.

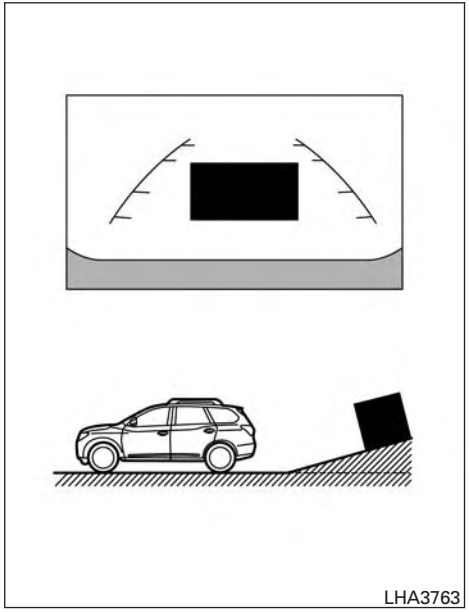

Backing up on a steep uphill

When backing up the vehicle up a hill, the distance guide lines and the vehicle width guide lines are shown closer than the actual distance. Note that any object on the hill is further than it appears on the monitor.

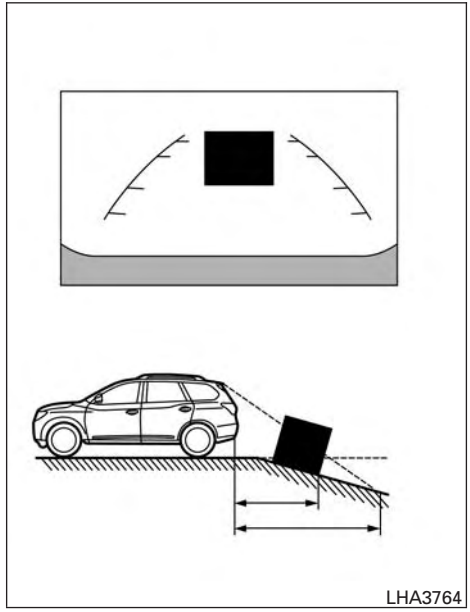

Backing up on a steep downhill

When backing up the vehicle down a hill, the distance guide lines and the vehicle width guide lines are shown farther than the actual distance. Note that any object on the hill is closer than it appears on the monitor.

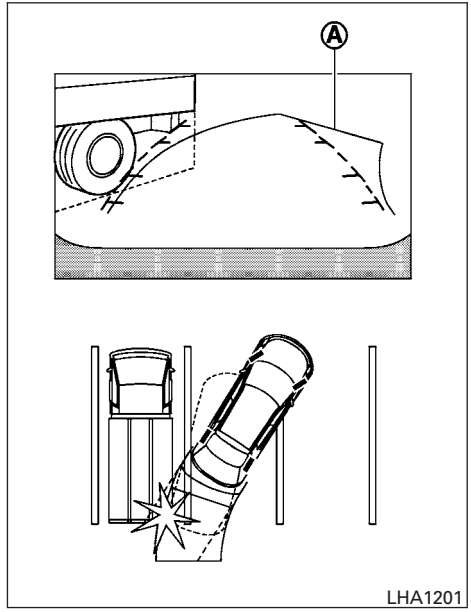

Backing up near a projecting object

The predicted course lines Ⓐ do not touch the object in the display. However, the vehicle may hit the object if it projects over the actual backing up course.

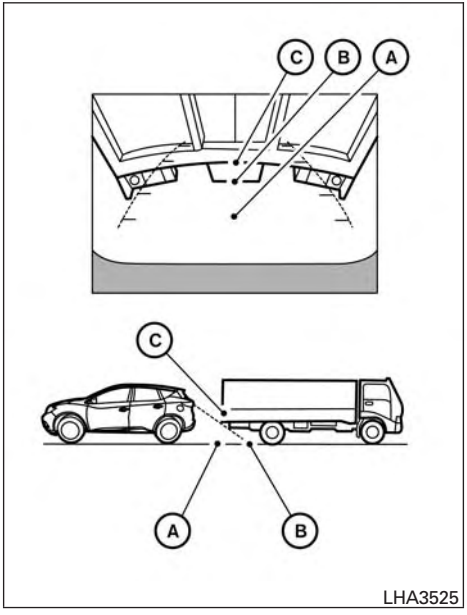

Backing up behind a projecting object

The position Ⓒ is shown farther than the position Ⓑ in the display. However, the position Ⓒ is actually at the same distance as the position Ⓐ. The vehicle may hit the object when backing up to the position Ⓐ if the object projects over the actual backing up course.

HOW TO PARK WITH PREDICTED COURSE LINES

⚠ WARNING

- **If the tires are replaced with different sized tires, the predicted course lines may be displayed incorrectly.**
- **On a snow-covered or slippery road, there may be a difference between the predicted course line and the actual course line.**
- **If the battery is disconnected or becomes discharged, the predicted course lines may be displayed incorrectly. If this occurs, please perform the following procedures:**
  - **Turn the steering wheel from lock to lock while the engine is running.**
  - **Drive the vehicle on a straight road for more than 5 minutes.**
- **When the steering wheel is turned with the ignition switch in the ACC position, the predicted course lines may be displayed incorrectly.**

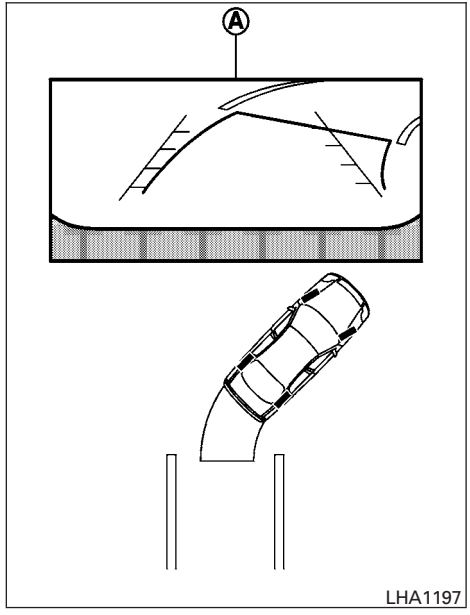

1. Visually check that the parking space is safe before parking your vehicle.
2. The rear view of the vehicle is displayed on the screen Ⓐ when the shift lever is moved to the R (Reverse) position.

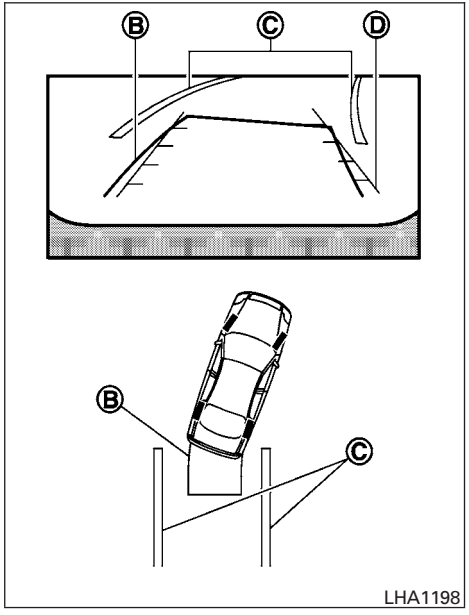

3. Slowly back up the vehicle adjusting the steering wheel so that the predicted course lines Ⓑ enter the parking space Ⓒ.
4. Maneuver the steering wheel to make the vehicle width guide lines Ⓓ parallel to the parking space Ⓒ while referring to the predicted course lines.
5. When the vehicle is parked in the space completely, move the shift lever to the P (Park) position and apply the parking brake.

HOW TO SWITCH THE DISPLAY

With the ignition switch in the ON position, press the CAMERA button or move the shift lever to the R (Reverse) position to operate the Around View® Monitor.

The Around View® Monitor displays different split screen views depending on the position of the shift lever. Press the CAMERA button or touch the Change view key on the touch-screen to switch between the available views.

If the shift lever is in the R (Reverse) position, the available views are:

- Rear view/bird's-eye view split screen
- Rear view/front-side view split screen
- Rear-wide view

If the shift lever is in the P (Park) position, the available views are:

- Front view/bird's-eye view split screen
- Front view/front-side view split screen
- Front-wide view

If the shift lever is in the D (Drive) position, the only available view is front view/front-side view split screen.

The display will switch from the Around View® Monitor screen when:

- The shift lever is in the D (Drive) position and the vehicle speed increases above approximately 10 km/h (6 mph).
- A different screen is selected.

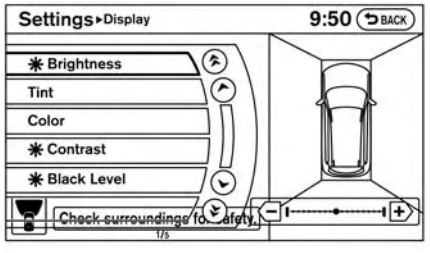

LHA3833

ADJUSTING THE SCREEN

To adjust the Display ON/OFF, Brightness, Tint, Color, Contrast and Black Level of the Around View® Monitor, press the SETTING button with the monitor on and select the “Display” key. Select one of the items and change the value by touching the “+” or “-” key or by turning the INFINITI controller.

NOTE:

Do not adjust the Brightness, Tint, Color, Contrast and Black Level of the Around View® Monitor while the vehicle is moving. Make sure the parking brake is firmly applied.

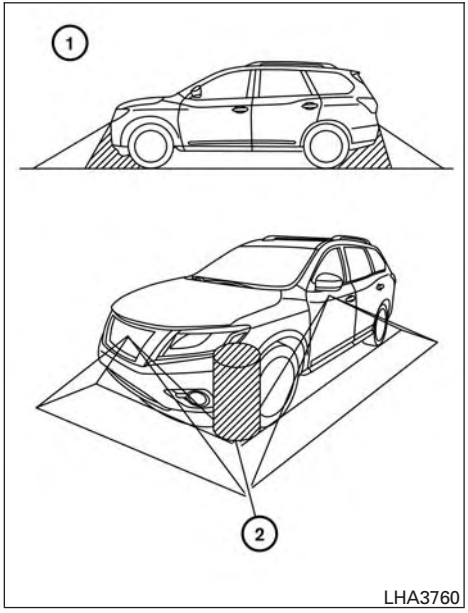

LHA3760

AROUND VIEW® MONITOR SYSTEM LIMITATIONS

⚠WARNING

Listed below are the system limitations for Around View® Monitor. Failure to operate the vehicle in accordance with these system limitations could result in serious injury or death.

- **Do not use the Around View® Monitor with the outside mirrors in the stored position, and make sure that the liftgate is securely closed when operating the vehicle using the Around View® Monitor.**
- **The apparent distance between objects viewed on the Around View® Monitor differs from the actual distance.**
- **The cameras are installed on the front grille, the outside mirrors and above the rear license plate. Do not put anything on the vehicle that covers the cameras.**
- **When washing the vehicle with high pressure water, be sure not to spray it around the cameras. Otherwise, water may enter the camera unit causing water condensation on the lens, a malfunction, fire or an electric shock.**
- **Do not strike the cameras. They are precision instruments. Doing so could cause a malfunction or cause damage resulting in a fire or an electric shock.**

There are some areas where the system will not show objects and the system does not warn of moving objects. When in the front or rear view display, an object below the bumper or on the ground may not be viewed ①. When in the bird's-eye view, a tall object near the seam ② of the camera viewing areas will not appear in the monitor.

The following are operating limitations and do not represent a system malfunction:

- There may be a delay when switching between views.
- When the temperature is extremely high or low, the screen may not display objects clearly.
- When strong light directly shines on the camera, objects may not be displayed clearly.
- The screen may flicker under fluorescent light.
- The colors of objects on the Around View® Monitor may differ somewhat from the actual color of objects.
- Objects on the Around View® Monitor may not be clear and the color of the object may differ in a dark environment.
- There may be differences in sharpness between each camera view of the bird's-eye view.
- Do not use wax on the camera lens. Wipe off any wax with a clean cloth that has been dampened with a diluted mild cleaning agent, then wipe with a dry cloth.

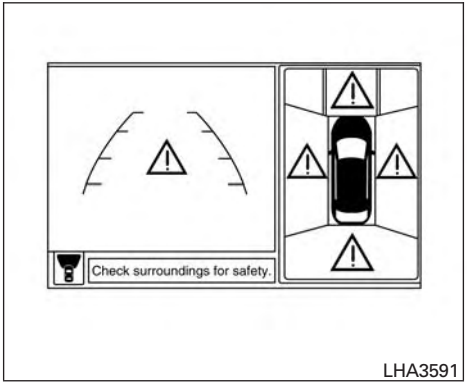

LHA3591

System temporarily unavailable

When the "!" icon is displayed on the screen, there are abnormal conditions in the Around View® Monitor. This will not hinder normal driving operation but the system should be inspected by an INFINITI retailer.

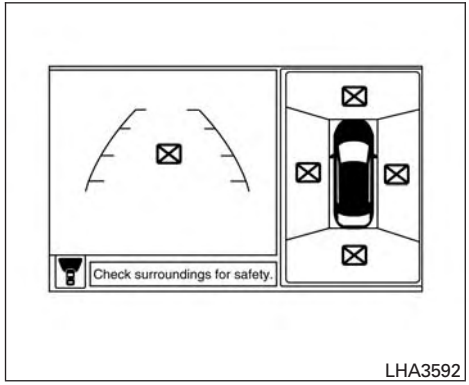

LHA3592

When the "[X]" icon is displayed on the screen, the camera image may be receiving temporary electronic disturbances from surrounding devices. This will not hinder normal driving operation but the system should be inspected by an INFINITI retailer if it occurs frequently.

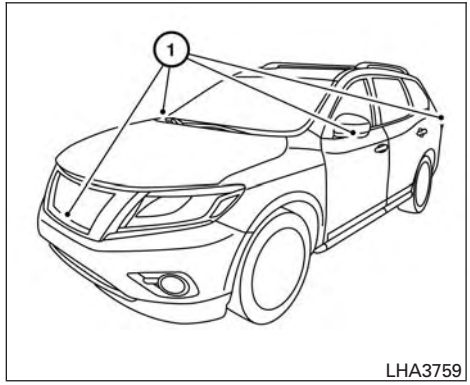

LHA3759

SYSTEM MAINTENANCE

⚠ CAUTION

- **Do not use alcohol, benzine or thinner to clean the camera. This will cause discoloration.**
- **Do not damage the cameras as the monitor screen may be adversely affected.**

If dirt, rain or snow accumulates on any of the cameras ①, the Around View® Monitor may not display objects clearly. Clean the camera by wiping with a cloth dampened with a diluted mild cleaning agent and then wiping with a dry cloth.

CAMERA AIDING SONAR (parking sensor) (if so equipped)

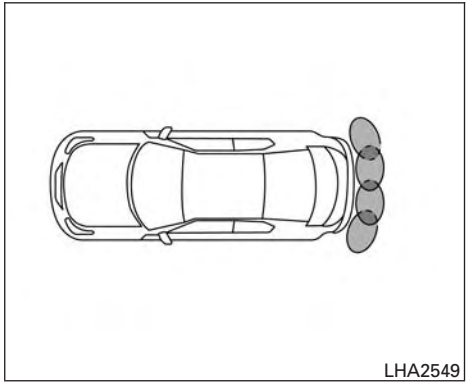

The Camera Aiding Sonar (parking sensor) sounds a tone to inform the driver of obstacles near the bumper.

The colors of the Camera Aiding Sonar (parking sensor) indicators and the distance guide lines in the rear view indicate different distances to the object.

⚠ WARNING

- **The Camera Aiding Sonar (parking sensor) is a convenience feature. It is not a substitute for proper parking.**
- **The driver is always responsible for safety during parking and other maneuvers.**
- **Always look around and check that it is safe to move before parking.**
- **Read and understand the limitations of the Camera Aiding Sonar (parking sensor) as contained in this section.**
- **The colors of the sonar indicators and the distance guide lines in the front, front-wide, rear and rear-wide views indicate different distances to the object.**
- **Inclement weather or ultrasonic sources such as an automatic car wash, a truck's compressed-air brakes or a pneumatic drill may affect the function of the system; this may include reduced performance or a false activation.**
- **This function is designed as an aid to the driver in detecting large stationary objects to help avoid damaging the vehicle.**
- **The system is not designed to prevent contact with small or moving objects.**
- **The system will not detect small objects below the bumper, and may not detect objects close to the bumper or on the ground.**
- **The system may not detect the following objects:**
  - **Fluffy objects such as snow, cloth, cotton, glass or wool.**
  - **Thin objects such as rope, wire or chain.**
  - **Wedge-shaped objects.**

- **If your vehicle sustains damage to the bumper fascia, leaving it misaligned or bent, the sensing zone may be altered causing inaccurate measurement of objects or false alarms.**

⚠ CAUTION

- **Excessive noise (such as audio system volume or an open vehicle window) will interfere with the tone and it may not be heard.**
- **Keep the surface of the Camera Aiding Sonars (parking sensors) (located on the front and rear bumper fascia) free from accumulations of snow, ice and dirt. Do not scratch the surface of the Camera Aiding Sonars (parking sensors) when cleaning. If the Camera Aiding Sonars (parking sensors) are covered, the accuracy of the Camera Aiding Sonar's (parking sensor's) function will be diminished.**

The system gives the tone for rear objects when the shift lever is in the R (Reverse) position.

The system is deactivated at speeds above 6 mph (10 km/h). It is reactivated at lower speeds.

When the objects are detected, the indicator (green) appears and blinks and the tone sounds intermittently. When the vehicle moves closer to the object, the color of the indicator turns yellow and the rate of the blinking and the rate of the tone increase. When the vehicle is very close to the object, the indicator stops blinking and turns red, and the tone sounds continuously.

The intermittent tone will stop after 3 seconds when an object is detected by only the corner Camera Aiding Sonar (parking sensor) and the distance does not change.

The tone will stop when the object is no longer near the vehicle.

In the below cases, the Camera Aiding Sonar (parking sensor) will be turned back on automatically:

- When the shift lever is in the R (Reverse) position.
- When vehicle speed decreases below approximately 6 mph (10 km/h).
- When the ignition switch is placed in the OFF position and turned back to the ON position again.
- The Camera Aiding Sonar (parking sensor) system can be permanently turned off using the meter settings.

MOVING OBJECT DETECTION (MOD)
(if so equipped)

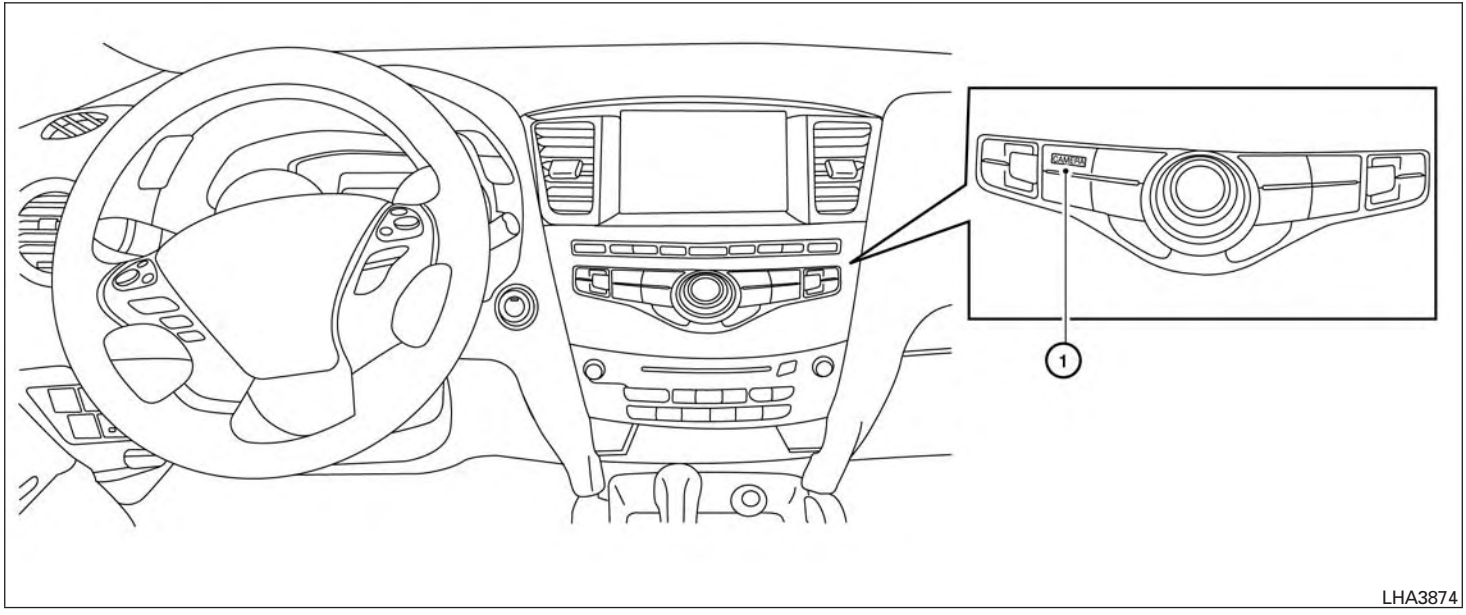

1. CAMERA button

⚠ WARNING

- **Failure to follow the warnings and instructions for proper use of the Moving Object Detection system could result in serious injury or death.**
- **The MOD system is not a substitute for proper vehicle operation and is not designed to prevent contact with objects surrounding the vehicle. When maneuvering, always use the outside mirrors and rearview mirror and turn and check the surroundings to ensure it is safe to maneuver.**
- **The system is deactivated at speeds above 10 km/h (6 mph). It is reactivated at lower speeds.**
- **The MOD system is not designed to detect surrounding stationary objects.**

The MOD system can inform the driver of moving objects near the vehicle when backing out of garages, maneuvering in parking lots and in other such instances.

The MOD system detects moving objects by using image processing technology on the image shown in the display.

MOD SYSTEM OPERATION

The MOD system will turn on automatically under the following conditions:

- When the shift lever is in the R (Reverse) position.
- When the CAMERA button is pressed to activate the camera view on the display.
- When vehicle speed decreases below approximately 6 mph (10 km/h) and the camera screen is displayed.

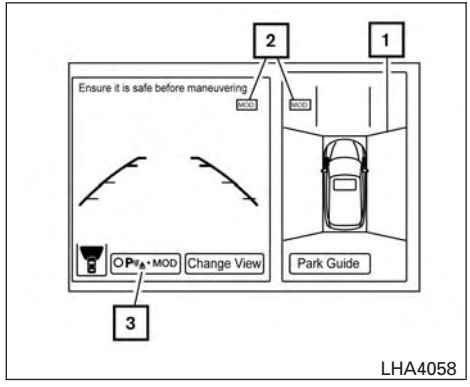

Front and bird's-eye views

The MOD system operates in the following conditions when the camera view is displayed:

- When the shift lever is in the P (Park) or N (Neutral) position and the vehicle is stopped, the MOD system detects moving objects in the bird's-eye view. The MOD system will not operate if the outside mirrors are moving in or out, in the stowed position, or if either front door is opened.
- When the shift lever is in the D (Drive) position and the vehicle speed is below approximately 10 km/h (6 mph), the MOD system detects moving objects in the front view.

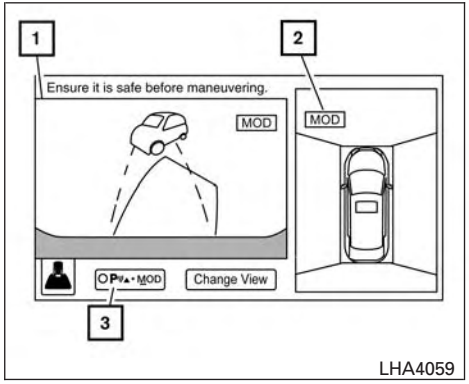

Rear and bird's-eye views

- When the shift lever is in the R (Reverse) position and the vehicle speed is below approximately 10 km/h (6 mph), the MOD system detects moving objects in the rear view. The MOD system will not operate if the liftgate is open.

The MOD system does not detect moving objects in the front-side view. The MOD icon is not displayed on the screen when in this view.

When the MOD system detects moving objects near the vehicle, a yellow frame will be displayed on the view where the objects are detected.

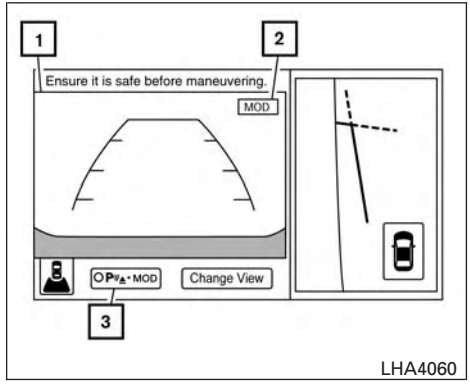

Rear and front-side views

While the MOD system continues to detect moving objects, the yellow frame continues to be displayed.

In the bird's-eye view, the yellow frame ① is displayed on each camera image (front, rear, right, left) depending on where moving objects are detected.

The yellow frame is displayed on each view in the front view and rear view modes.

While the RCTA chime (if so equipped) is beeping, the MOD system does not chime.

A blue MOD icon ② is displayed in the view where the MOD system is operative. A gray MOD icon is displayed in the view where the MOD system is not operative.

TURNING MOD ON AND OFF

To turn the MOD system on or off, touch the MOD key on the screen ③.

MOD SYSTEM LIMITATIONS

⚠ WARNING

Listed below are the system limitations for MOD. Failure to operate the vehicle in accordance with these system limitations could result in serious injury or death.

- **Do not use the MOD system when towing a trailer. The system may not function properly.**
- **Excessive noise (for example, audio system volume or open vehicle window) will interfere with the chime sound, and it may not be heard.**
- **The MOD system performance will be limited according to environmental conditions and surrounding objects such as:**
  - **When there is low contrast between background and the moving objects.**

- **When there is a blinking source of light.**
- **When strong light such as another vehicle's headlight or sunlight is present.**
- **When camera orientation is not in its usual position, such as when a mirror is folded.**
- **When there is dirt, water drops or snow on the camera lens.**
- **When the position of the moving objects in the display is not changed.**

- **The MOD system might detect flowing water droplets on the camera lens, white smoke from the muffler, moving shadows, etc.**
- **The MOD system may not function properly depending on the speed, direction, distance or shape of the moving objects.**
- **If your vehicle sustains damage to the parts where the camera is installed, leaving it misaligned or bent, the sensing zone may be altered and the MOD system may not detect objects properly.**
- **When the temperature is extremely high or low, the screen may not display objects clearly. This is not a malfunction.**

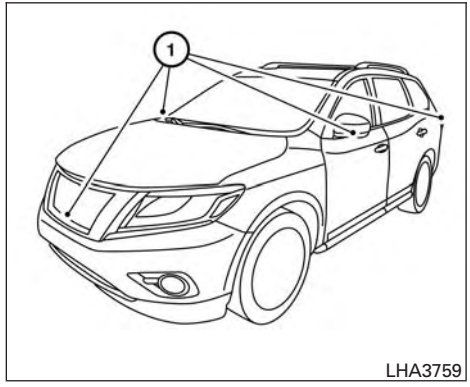

SYSTEM MAINTENANCE

⚠ CAUTION

- **Do not use alcohol, benzine or thinner to clean the camera. This will cause discoloration.**
- **Do not damage the camera as the monitor screen may be adversely affected.**

If dirt, rain or snow accumulates on any of the cameras ①, the MOD system may not operate properly. Clean the camera by wiping with a cloth dampened with a diluted mild cleaning agent and then wiping with a dry cloth.

VENTS

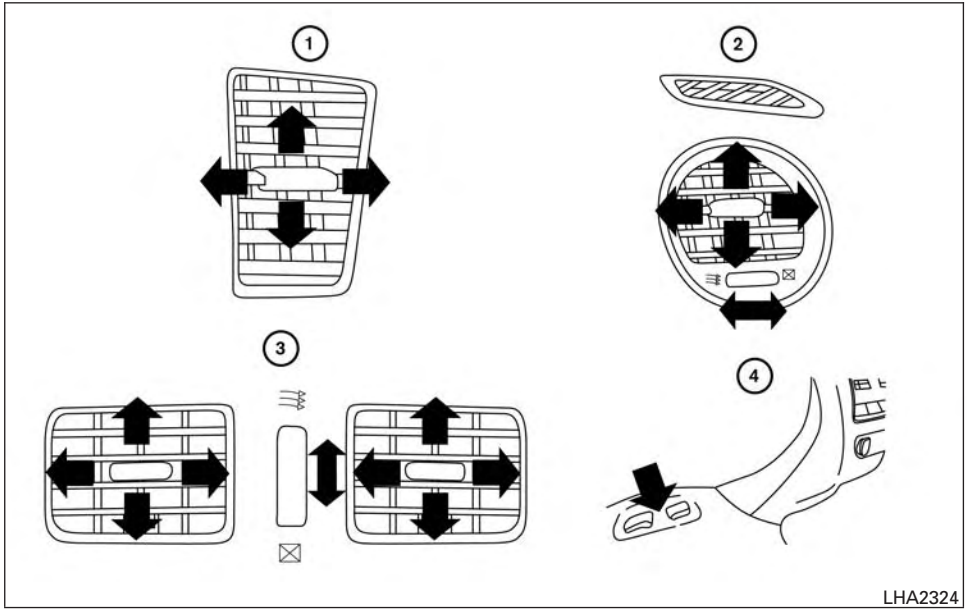

Adjust air flow direction for the center vents ①, driver's and passenger's side vents ②, and rear vents ③ by moving the vent slide and/or vent assemblies.

Open or close the vents using the dial. Move the dial toward the ⋚ to open the vents or toward the ⊠ to close them.

The vents underneath the second row seats ④ are operational when the air flow mode is selected. These vents cannot be closed. For additional information, refer to "Air flow control" in this section.

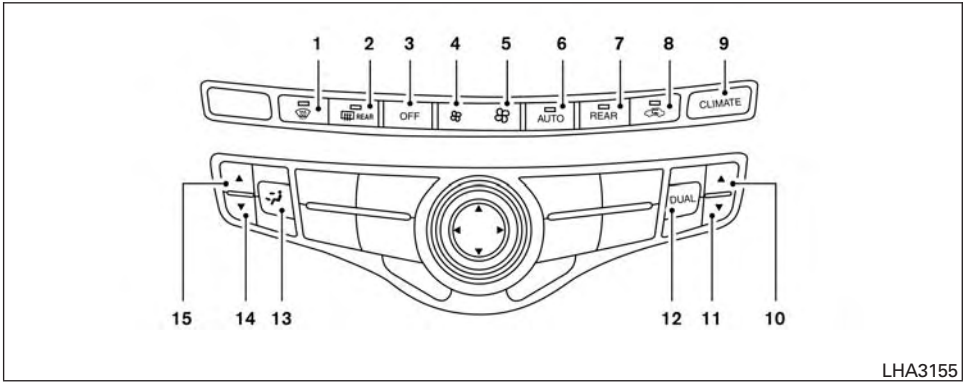

1. (front defroster) button
2. rear window and outside mirror defroster switch
3. OFF button
4. (fan speed) decrease button
5. (fan speed) increase button
6. AUTO climate control ON button
7. REAR button
8. Air recirculation button
9. CLIMATE button
10. ▲ Temperature control (increase) button (passenger's side)
11. ▼ Temperature control (decrease) button (passenger's side)
12. DUAL button
13. Manual air flow control button (driver's side)
14. ▼ Temperature control (decrease) button (driver's side)
15. ▲ Temperature control (increase) button (driver's side)

WARNING

- **The air conditioner cooling function operates only when the engine is running.**
- **Do not leave children or adults who would normally require the assistance of others alone in your vehicle. Pets should also not be left alone. They could accidentally injure themselves or others through inadvertent operation of the vehicle. Also, on hot, sunny days, temperatures in a closed vehicle could quickly become high enough to cause severe or possibly fatal injuries to people or animals.**
- **Do not use the recirculation mode for long periods as it may cause the interior air to become stale and the windows to fog up.**

Start the engine and operate the controls to activate the air conditioner.

NOTE:

- Odors from inside and outside the vehicle can build up in the air conditioner unit. Odor can enter the passenger compartment through the vents.

- When parking, set the heater and air conditioner controls to turn off air recirculation to allow fresh air into the passenger compartment. This should help reduce odors inside the vehicle.

AUTOMATIC OPERATION

Cooling and/or dehumidified heating (AUTO)

This mode may be used all year round as the system automatically works to keep a constant temperature. Air flow distribution, intake air control, and fan speed are also controlled automatically.

1. Press the AUTO button on. (The indicator on the button will illuminate and AUTO will be displayed.)
2. Operate the driver's side temperature control buttons.

- Adjust the temperature display to about 75°F (24°C) for normal operation.
- The temperature of the passenger compartment will be maintained automatically. Air flow distribution, intake air control, and fan speed are also controlled automatically.
- A visible mist may be seen coming from the ventilators in hot, humid conditions as the air is cooled rapidly. This does not indicate a malfunction.

Dehumidified defrosting or defogging

1. Press the front defroster button on. (The indicator light on the button will come on.)
2. Operate the temperature control buttons to set the desired temperature.

- To quickly remove ice from the outside of the windows, use the fan speed control buttons to set the fan speed to maximum.
- As soon as possible after the windshield is clean, press the AUTO button to return to the automatic mode.
- When the front defroster button is pressed, the air conditioner will automatically be turned on at outside temperatures above 36°F (2°C). The air recirculate mode automatically turns off, allowing outside air to be drawn into the passenger compartment to further improve the defogging performance.

Voice Recognition logic (if so equipped)

When the climate control system is on, the front and rear fan speeds may be automatically lowered so that commands are more easily recognized. Fan speed can be adjusted using the fan speed decrease and increase buttons, if desired.

Remote start logic (if so equipped)

Vehicles equipped with automatic climate controls and remote start function may go into automatic heating or cooling mode when remote start is activated depending on outside and cabin temperatures. During this period, the climate control display and buttons will be inoperable until ignition switch is turned on.

MANUAL OPERATION

Fan speed control

Press the fan speed control buttons to manually control the fan speed.
Press the AUTO button to return to automatic control of the fan speed.

Temperature control

Press the temperature control buttons up or down to set the desired temperature.

The temperature can be set within the following range:

- For U.S.: 60 to 90°F (16 to 32°C)
- For Canada: 64 to 90°F (18 to 32°C)

Air recirculation

Press the air recirculation button to recirculate interior air inside the vehicle. The indicator light on the button will come on.

The air recirculation cannot be activated when the air conditioner is in the front defrosting mode.

Automatic intake air control

In the AUTO mode, the intake air will be controlled automatically. To manually control the intake air, press the air recirculation button. To return to the automatic control mode, press and hold the air recirculation button for about 2 seconds. The indicator light will flash twice, and then the intake air will be controlled automatically.

Air flow control

Press the button to manually control air flow. Pressing the button repeatedly will cycle through the available modes and display the corresponding icon on the center display:

- — Air flows from center and side vents.
- — Air flows from center and side vents and foot outlets.
- — Air flows mainly from foot outlets.
- — Air flows from defroster and foot outlets.
- — Air flows from defroster outlets.

To turn system off

Press the OFF button.

Rear window and outside mirror defroster switch

For additional information, refer to “Rear window and outside mirror defroster switch” in the “Instruments and controls” section of this manual.

OPERATING TIPS

- When the engine coolant temperature and outside air temperature are low, the air flow from the foot outlets may not operate for a maximum of 150 seconds. However, this is not a malfunction. After the coolant temperature warms up, air flow from the foot outlets will operate normally.

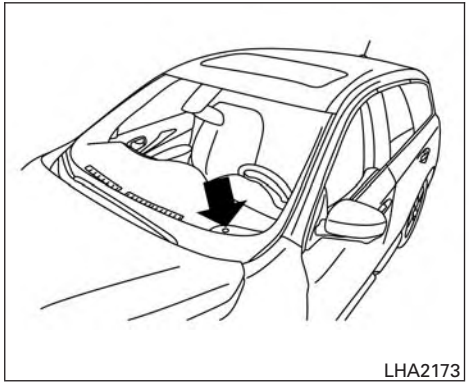

LHA2173

The sunload sensor, located on the top driver's side of the instrument panel, helps the system maintain a constant temperature. Do not put anything on or around this sensor.

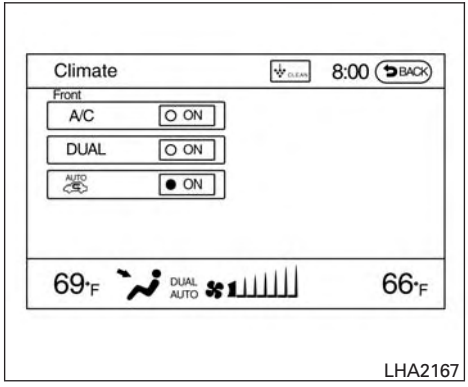

LHA2167

CLIMATE SETTING SCREEN

Climate control settings can be changed on the screen.

Press the CLIMATE button on the instrument panel and turn the display to the Climate mode.

Heating (A/C off)

The air conditioner does not activate in this mode. When you need to heat only, use this mode.

1. Press the CLIMATE button.
2. If the "A/C" indicator on the screen illuminates, select the "A/C" key. (The "A/C" indicator will turn off.)
3. Press the temperature control button to set the desired temperature.

- The temperature of the passenger compartment will be maintained automatically. Air flow distribution and fan speed are also controlled automatically.
- Do not set the temperature lower than the outside air temperature or the system may not work properly.
- This procedure is not recommended if windows fog up.

When the outside temperature decreases to approximately 32°F (0°C), the A/C function does not activate even if the "A/C" indicator light illuminates.

Dual control mode setting

You can individually set the driver and front passenger side temperature and air flow mode using each temperature control button or manual air flow control button.

1. Press the CLIMATE button.
2. By touching the "DUAL" key, or when the passenger side temperature control button or manual air control button is pressed, the "DUAL" indicator on the screen will illuminate.

3. To turn off the passenger side temperature control, touch the “DUAL” key and the “DUAL” indicator will turn off.

- The Dual control mode cannot be activated when the air conditioner is in the front defrosting mode.

Advanced Climate Control System (ACCS) (if so equipped)

The Advanced Climate Control System (ACCS) keeps the air inside of the vehicle clean, using the ion control and the automatic air intake control with exhaust gas detecting sensor.

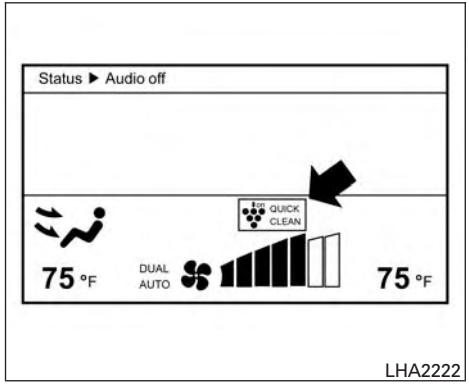

Ion control (if so equipped)

This unit generates highly concentrated Plasmacluster® ions into the air blown from the vents and reduces odor absorbed into the interior trim.

When the air conditioner is turned on, the system generates Plasmacluster® ions automatically.

The amount of Plasmacluster® ions increases according to the amount of air flow. When the air flow is high, is displayed on the screen and when the air flow is low, the indication in the screen changes to .

Plasmacluster® and Plasmacluster® ion are registered trademarks of Sharp Corporation.

Exhaust gas/outside odor detection sensor (if so equipped)

This vehicle is equipped with an exhaust gas detection sensor. When the automatic intake air control is ON, the sensor detects industry odors such as pulp or chemicals, and exhaust gas such as gasoline or diesel. When such odors or gas are detected, the system automatically changes from the outside air circulation mode to the recirculation mode.

When the intake air control button is pressed under the following conditions, the indicator light on the button will illuminate and the exhaust gas detection sensor will turn on.

- The air flow control is not in the front defroster mode (the indicator light on the front defroster button is turned off).
- The outside temperature is about 32°F (0°C) or more.

When the automatic intake air control is ON, for the first 5 minutes, the recirculation mode is selected to prevent dust, dirt and pollen from entering the vehicle and cleans the air inside of the vehicle with positive and negative ions that are emitted from the vent.

After the 5 minutes, the sensor detects exhaust gas and automatically alternates between the recirculation mode and outside air circulation mode.

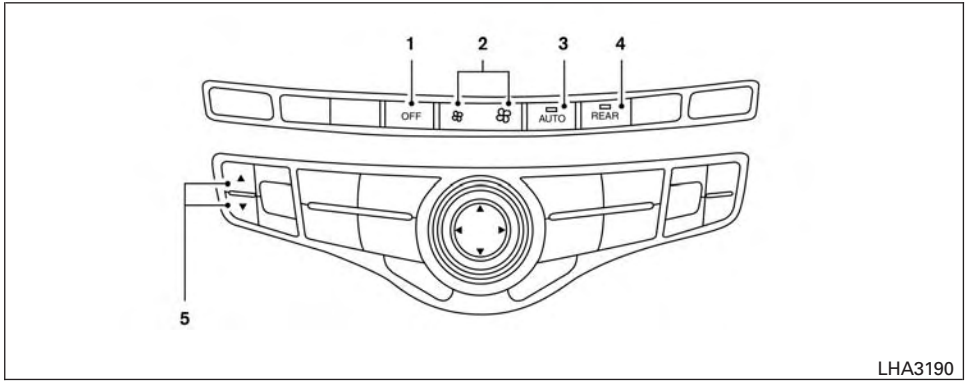

Front Controls

REAR AUTOMATIC AIR CONDITIONING SYSTEM

1. OFF button
2. (fan speed) increase and decrease buttons
3. AUTO button
4. REAR button
5. (temperature) increase and decrease buttons (driver's side)

To control the rear automatic air conditioning system with the front air conditioner control panel, press the REAR button with the front air conditioning system on. When the rear automatic air conditioning system control is on, the indicator light on the REAR button will illuminate and the front display will switch to the Rear Air-conditioning screen.

The rear automatic air conditioning system can be adjusted with the front air conditioner control panel when the Rear Air-conditioning screen is displayed.

To adjust the front air conditioning system, press the REAR button once more. The Rear Air-conditioning screen will no longer be displayed.

Automatic operation

1. Press the AUTO button. The AUTO indicator light will illuminate and "AUTO" will appear on the display.
2. Press the temperature increase and decrease buttons (driver's side) to set the desired temperature.

Manual operation

- **Temperature control**
  Press the temperature increase and decrease buttons (driver's side) to set the desired temperature.
- **Fan speed control**
  Press the (fan speed) increase and decrease buttons to manually control the fan speed.

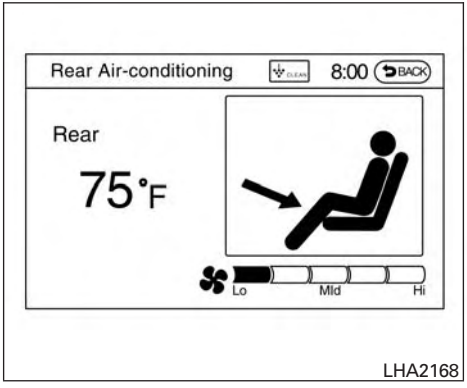

LHA2168

Rear Heating (A/C off)

1. Press the REAR button to display the Rear Air-conditioning screen on the front display when the rear automatic air conditioning system is on.
2. Press the AUTO button. The AUTO indicator light will illuminate and “AUTO” will appear on the display.
3. If the A/C indicator light illuminates, press the A/C button. The A/C indicator light will turn off.
4. Press the temperature increase and decrease buttons (driver’s side) to set the desired temperature.

- Do not set the temperature lower than the outside air temperature. Doing so may cause the temperature to not be controlled properly.
- To dehumidify the air, press the A/C button before turning on the heater.

Turning the system off

1. Press the REAR button on the front control panel until the Rear Air-conditioning screen is displayed.
2. Press the OFF button. The rear climate controls will turn off.

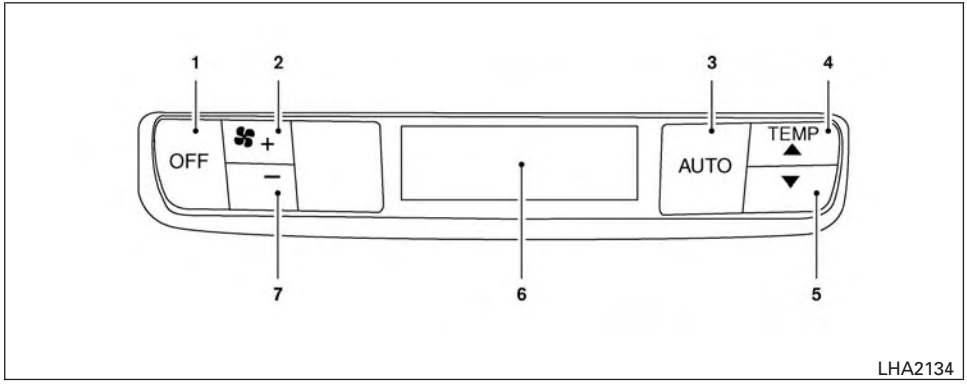

Rear Controls

Rear control buttons

1. OFF button
2. ✻ + (fan speed increase) button
3. AUTO button
4. ▲ (temperature increase) button
5. ▼ (temperature decrease) button
6. Display
7. ✻ - (fan speed decrease) button

The rear seat passengers can adjust the rear automatic air conditioning system using the control switches at the rear of the center console.

The rear control buttons do not function when the Rear Air-conditioning screen is shown on the front display. To activate the rear control buttons, press the REAR button on the front air conditioner control panel and switch the screen on the front display.

- **OFF button** Turns rear automatic air conditioning system off.
- **Fan speed increase and decrease buttons** Adjusts the rear fan speed up or down.
- **AUTO button** Turns rear automatic air conditioning system on, AUTO mode on.
- **Temperature increase and decrease buttons** Adjusts the rear temperature up or down.

SERVICING AIR CONDITIONER

The air conditioner system in your INFINITI vehicle is charged with a refrigerant designed with the environment in mind.

This refrigerant does not harm the earth's ozone layer.

Special charging equipment and lubricant is required when servicing your INFINITI air conditioner. Using improper refrigerants or lubricants will cause severe damage to your air conditioner system. For additional information, refer to "Air conditioner system refrigerant and oil recommendations" in the "Technical and consumer information" section of this manual.

An INFINITI retailer is able to service your "environmentally friendly" air conditioning system.

⚠ WARNING

The air conditioner system contains refrigerant under high pressure. To avoid personal injury, any air conditioner service should be done only by an experienced technician with proper equipment.

AUDIO SYSTEM

RADIO

Place the ignition switch in the ACC or ON position and press the ON·OFF button to turn the radio on. If you listen to the radio with the engine not running, the ignition switch should be placed in the ACC position.

Radio reception is affected by station signal strength, distance from radio transmitter, buildings, bridges, mountains and other external influences. Intermittent changes in reception quality normally are caused by these external influences.

Using a cellular phone in or near the vehicle may influence radio reception quality.

Radio reception

Your INFINITI radio system is equipped with state-of-the-art electronic circuits to enhance radio reception. These circuits are designed to extend reception range, and to enhance the quality of that reception.

However, there are some general characteristics of both FM and AM radio signals that can affect radio reception quality in a moving vehicle, even when the finest equipment is used. These characteristics are completely normal in a given reception area, and do not indicate any malfunction in your INFINITI radio system.

Reception conditions will constantly change because of vehicle movement. Buildings, terrain, signal distance and interference from other vehicles can work against ideal reception. Described below are some of the factors that can affect your radio reception.

Some cellular phones or other devices may cause interference or a buzzing noise to come from the audio system speakers. Storing the device in a different location may reduce or eliminate the noise.

FM RADIO RECEPTION

Range: FM range is normally limited to 25 – 30 mi (40 – 48 km), with monaural (single channel) FM having slightly more range than stereo FM. External influences may sometimes interfere with FM station reception even if the FM station is within 25 mi (40 km). The strength of the FM signal is directly related to the distance between the transmitter and receiver. FM signals follow a line-of-sight path, exhibiting many of the same characteristics as light. For example, they will reflect off objects.

Fade and drift: As your vehicle moves away from a station transmitter, the signals will tend to fade and/or drift.

Static and flutter: During signal interference from buildings, large hills or due to antenna position (usually in conjunction with increased distance from the station transmitter), static or flutter can be heard. This can be reduced by adjusting the treble control to reduce treble response.

Multipath reception: Because of the reflective characteristics of FM signals, direct and reflected signals reach the receiver at the same time. The signals may cancel each other, resulting in momentary flutter or loss of sound.

AM RADIO RECEPTION

AM signals, because of their low frequency, can bend around objects and skip along the ground. In addition, the signals can be bounced off the ionosphere and bent back to earth. Because of these characteristics, AM signals are also subject to interference as they travel from transmitter to receiver.

Fading: Occurs while the vehicle is passing through freeway underpasses or in areas with many tall buildings. It can also occur for several seconds during ionospheric turbulence even in areas where no obstacles exist.

Static: Caused by thunderstorms, electrical power lines, electric signs and even traffic lights.

SATELLITE RADIO RECEPTION

When the satellite radio is used for the first time or the battery has been replaced, the satellite radio may not work properly. This is not a malfunction. Wait more than 10 minutes with satellite radio ON and the vehicle outside of any metal or large building for satellite radio to receive all of the necessary data.

The satellite radio mode will be skipped unless an optional satellite receiver and antenna are installed and a SiriusXM® Satellite Radio service subscription is active. Satellite radio is not available in Alaska, Hawaii and Guam.

Satellite radio performance may be affected if cargo carried on the roof blocks the satellite radio signal.

If possible, do not put cargo over the satellite antenna.

A build up of ice on the satellite radio antenna can affect satellite radio performance. Remove the ice to restore satellite radio reception.

XM® is a registered trademark of SiriusXM® Satellite Radio, Inc.

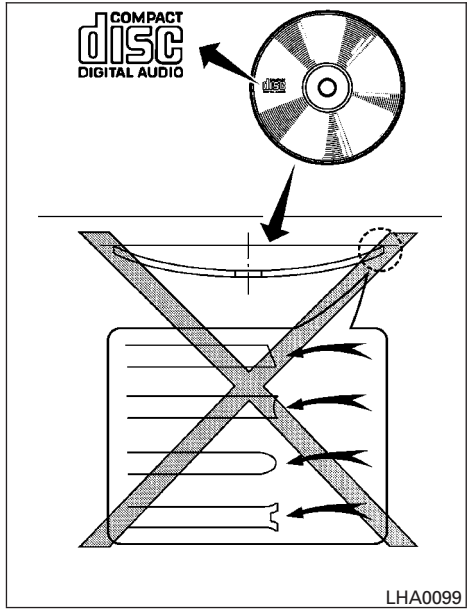

AUDIO OPERATION PRECAUTIONS

Compact disc (CD) player (models without Navigation System)

⚠ CAUTION

- **Do not force a compact disc into the CD insert slot. This could damage the CD and/or CD changer/player.**
- **Trying to load a CD with the CD door closed could damage the CD and/or CD changer.**
- **Only one CD can be loaded into the CD player at a time.**

- **Only use high quality 4.7 in (12 cm) round discs that have the "COMPACT disc DIGITAL AUDIO" logo on the disc or packaging.**
- **During cold weather or rainy days, the player may malfunction due to the humidity. If this occurs, remove the CD and dehumidify or ventilate the player completely.**
- **The player may skip while driving on rough roads.**
- **The CD player sometimes cannot function when the compartment temperature is extremely high or low. Decrease/increase the temperature before use.**
- **Do not expose the CD to direct sunlight.**
- **CDs that are in poor condition or are dirty, scratched or covered with fingerprints may not work properly.**
- **The following CDs may not work properly:**
  - **Copy control compact discs (CCCD)**
  - **Recordable compact discs (CD-R)**
  - **Rewritable compact discs (CD-RW)**
- **Do not use the following CDs as they may cause the CD player to malfunction:**
  - **3.1 in (8 cm) discs with an adapter**
  - **CDs that are not round**
  - **CDs with a paper label**
  - **CDs that are warped, scratched, or have abnormal edges**
- **This audio system can only play prerecorded CDs. It has no capability to record or burn CDs.**
- **If the CD cannot be played, one of the following messages will be displayed.**

  CHECK DISC:

  - **Confirm that the CD is inserted correctly (the label side is facing up, etc.).**
  - **Confirm that the CD is not bent or warped and it is free of scratches.**

  PRESS EJECT:

  This is an error due to excessive temperature inside the player. Remove the CD by pressing the EJECT button. After a short time, reinsert the CD. The CD can be played when the temperature of the player returns to normal.

  UNPLAYABLE:

  The file is unplayable in this audio system (only MP3 or WMA (if so equipped) CD).

CD/DVD combination player (models with Navigation System)

- **Do not force a disc into the CD/DVD insert slot. This could damage the CD/DVD player.**
- **During cold weather or rainy days, the player may malfunction due to the humidity. If this occurs, remove the CD/DVD and dehumidify or ventilate the player completely.**
- **The player may skip while driving on rough roads.**
- **The CD/DVD player sometimes cannot function when the passenger compartment temperature is extremely high. Decrease the temperature before use.**
- **Only use high quality 4.7 in (12 cm) round discs that have the "COMPACT disc DIGITAL AUDIO" or "DVD Video" logo on the disc or packaging.**
- **Do not expose the CD/DVD to direct sunlight.**
- **CDs/DVDs that are of poor quality, dirty, scratched, covered with fingerprints, or that have pinholes may not work properly.**
- **The following CDs/DVDs are not guaranteed to play:**
  - **Copy control compact discs (CCCD)**
  - **Recordable compact discs (CD-R)**
  - **Rewritable compact discs (CD-RW)**
  - **Recordable compact discs (DVD±R, DVD±R DL)**
  - **Rewritable compact discs (DVD±RW, DVD±RW DL)**
- **Do not use the following CDs/DVDs as they may cause the CD/DVD player to malfunction.**
  - **3.1 in (8 cm) discs**
  - **CDs/DVDs that are not round**
  - **CDs/DVDs with a paper label**
  - **CDs/DVDs that are warped, scratched, or have abnormal edges**
  - **This audio system can only play prerecorded CDs/DVDs. It has no capabilities to record or burn CDs/DVDs.**
- **If the CD/DVD cannot be played, one of the following messages will be displayed.**

Disc Read Error:

- **Confirm that the CD/DVD is inserted correctly (the label side is facing up, etc.).**
- **Confirm that the CD/DVD is not bent or warped and it is free of scratches.**

Please Eject Disc:

This error may be due to the temperature inside the player getting too high. Remove the CD/DVD by pressing the EJECT button, and after a short time reinsert the CD/DVD. The CD/DVD can be played when the temperature of the player returns to normal.

Unplayable File:

- **The file may be copy protected.**
- **The file is not MP3, WMA, AAC, M4A or DIVX type.**

Region Invalid

- **The DVD is not for region 1 or all regions.**

- **Use DVDs with a region code “1”, “ALL” or “1 included” for your DVD entertainment system. (The region code Ⓐ is displayed as a small symbol printed on the top of the DVD Ⓑ.) This vehicle-installed DVD player cannot play DVDs with a region code other than “1” or “ALL”.**

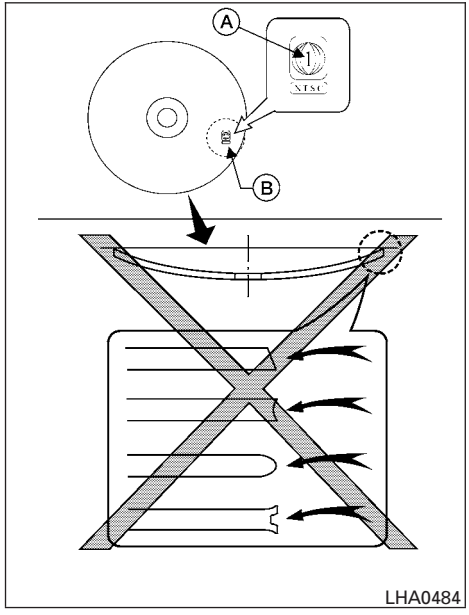

Copyright and trademark

- **The technology protected by the U.S. patent and other intellectual property rights owned by Macrovision Corporation and other right holders is adopted for this system.**
- **This copyright protected technology cannot be used without a permit from Macrovision Corporation. It is limited to personal use, etc., as long as the permit from Macrovision Corporation is not issued.**
- **Modifying or disassembling is prohibited.**
- **Dolby digital is manufactured under license from Dolby Laboratories, Inc.**
- **Dolby and the double D mark “ ” are trademarks of Dolby Laboratories, Inc.**
- **DTS and DTS Digital Surround “ ® ” are registered trademarks of Digital Theater Systems, Inc.**

USB (Universal Serial Bus) Connection Port

⚠WARNING

Do not connect, disconnect or operate the USB device while driving. Doing so can be a distraction. If distracted you could lose control of your vehicle and cause an accident or serious injury.

⚠ CAUTION

- **Do not force the USB device into the USB port. Inserting the USB device tilted or up-side-down into the port may damage the port. Make sure that the USB device is connected correctly into the USB port.**
- **Do not grab the USB port cover (if so equipped) when pulling the USB device out of the port. This could damage the port and the cover.**
- **Do not leave the USB cable in a place where it can be pulled unintentionally. Pulling the cable may damage the port.**

The vehicle is not equipped with a USB device. USB devices should be purchased separately as necessary.

This system cannot be used to format USB devices. To format a USB device, use a personal computer.

In some jurisdictions, the USB device for the front seats plays only sound without images for regulatory reasons, even when the vehicle is parked.

This system supports various USB memory devices, USB hard drives and iPod® players. Some USB devices may not be supported by this system.

- Partitioned USB devices may not play correctly.
- Some characters used in other languages (Chinese, Japanese, etc.) may not appear properly in the display. Using English language characters with a USB device is recommended.

General notes for USB use

Refer to your device manufacturer's owner information regarding the proper use and care of the device.

Notes for iPod® use

iPod® is a trademark of Apple Inc., registered in the U.S. and other countries.

- Improperly plugging in the iPod® may cause a checkmark to be displayed on and off (flickering). Always make sure that the iPod® is connected properly.
- An iPod® nano (1st Generation) may remain in fast forward or rewind mode if it is connected during a seek operation. In this case, please manually reset the iPod®.
- An iPod® nano (2nd Generation) will continue to fast-forward or rewind if it is disconnected during a seek operation.
- An incorrect song title may appear when the Play Mode is changed while using an iPod® nano (2nd Generation).
- Audiobooks may not play in the same order as they appear on an iPod®.
- Large video files cause slow responses in an iPod®. The vehicle center display may momentarily black out, but will soon recover.
- If an iPod® automatically selects large video files while in the shuffle mode, the vehicle center display may momentarily black out, but will soon recover.

Bluetooth® streaming audio (if so equipped)

- Some Bluetooth® audio devices may not be recognized by the in-vehicle audio system.
- It is necessary to set up the wireless connection between a compatible Bluetooth® audio device and the in-vehicle Bluetooth® module before using the Bluetooth® audio.
- Operating procedure of the Bluetooth® audio will vary depending on the devices. Make sure how to operate your audio device before using it with this system.

- The Bluetooth® audio may be stopped under the following conditions:
  - Receiving a call on the Hands-Free Phone System.
  - Checking the connection to the hands-free phone.
- Do not place the Bluetooth® audio device in an area surrounded by metal or far away from the in-vehicle Bluetooth® module to prevent tone quality degradation and wireless connection disruption.
- While an audio device is connected through the Bluetooth® wireless connection, the battery power of the device may discharge quicker than usual.
- This system supports the Bluetooth® Audio Distribution Profile (A2DP, AVRCP).

Bluetooth®

BLUETOOTH® is a trademark owned by Bluetooth SIG, Inc. and licensed to Clarion Co., Ltd.

CD or USB with Compressed Audio Files (models without Navigation System)

The file types supported by this system are MP3 and WMA.

Explanation of terms

- MP3 — MP3 is short for Moving Pictures Experts Group Audio Layer 3. MP3 is the most well-known compressed digital audio file format. This format allows for near "CD quality" sound, but at a fraction of the size of normal audio files. MP3 conversion of an audio track from CD-ROM can reduce the file size by approximately a 10:1 ratio with virtually no perceptible loss in quality. MP3 compression removes the redundant and irrelevant parts of a sound signal that the human ear doesn't hear.
- WMA — Windows Media Audio (WMA)* is a compressed audio format created by Microsoft as an alternative to MP3. The WMA codec offers greater file compression than the MP3 codec, enabling storage of more digital audio tracks in the same amount of space when compared to MP3s at the same level of quality.
- Bit rate — Bit rate denotes the number of bits per second used by a digital music file. The size and quality of a compressed digital audio file is determined by the bit rate used when encoding the file.
- Sampling frequency — Sampling frequency is the rate at which the samples of a signal are converted from analog to digital (A/D conversion) per second.
- Multisession — Multisession is one of the methods for writing data to media. Writing data once to the media is called a single session, and writing more than once is called a multisession.
- ID3/WMA Tag — The ID3/WMA tag is the part of the encoded MP3 or WMA file that contains information about the digital music file such as song title, artist, encoding bit rate, track time duration, etc. ID3 tag information is displayed on the Artist/song title line on the display.

* Windows®, Windows Media® and Windows Vista® are registered trademarks and trademarks in the United States of America and other countries of Microsoft Corporation of the USA.

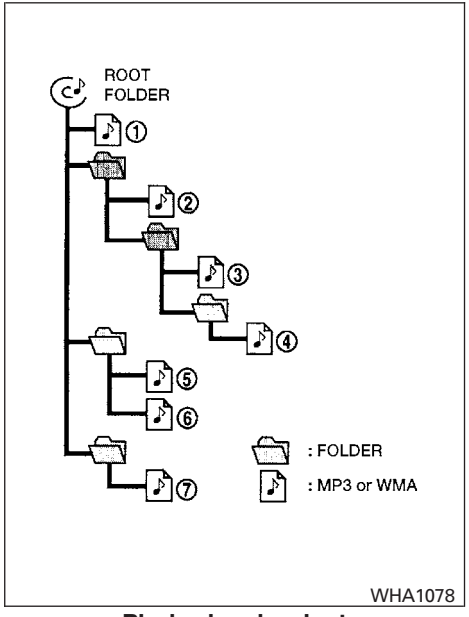

Playback order chart

Playback order

Music playback order of a CD with MP3 or WMA files is as illustrated.

- The names of folders not containing MP3 or WMA files are not shown in the display.
- If there is a file in the top level of the disc, “Root Folder” is displayed.
- The playback order is the order in which the files were written by the writing software. Therefore, the files might not play in the desired order.

Specification chart

Supported media			CD, CD-R, CD-RW, USB 2.0
Supported file systems			CD, CD-R, CD-RW, ISO9660 LEVEL1, ISO9660 LEVEL2, Romeo, Joliet * ISO9660 Level 3 (packet writing) is not supported. * Files saved using the Live File System component (on a Windows Vista® operating system-based computer) are not supported.
			UDF Bridge (UDF 1.02 + ISO9660), UDF 1.5, UDF 2.0 VDF 1.5/VDF 2.0 (packet writing) is not supported.
			USB memory: FAT16, FAT32
Supported versions	MP3	Version	MPEG1, MPEG2, MPEG2.5
		Sampling frequency	8 kHz - 48 kHz
		Bit rate	8 kbps - 320 kbps, VBR*2
	WMA*1	Version	WMA7, WMA8
		Sampling frequency	8 kHz - 48 kHz
		Bit rate	8 kbps - 320 kbps, VBR*2
Tag information (Song title and artist name)			ID3 tag VER1.0, VER1.1, VER2.2, VER2.3, VER 2.4 (MP3 only)
			WMA tag (WMA only)
Folder levels			Folder levels: 8, Folders: 255 (including root folder), Files: 512 (Max. 255 files for one folder)
Text character number limitation			64 characters
Displayable character codes*3			01: ASCII, 02: ISO-8859-1, 03: UNICODE (UTF-16 LE), 04: UNICODE (UTF-16 BE), 05: UNICODE (UTF-8)

*1 Protected WMA files (DRM) cannot be played.

*2 When VBR files are played, the playback time may not be displayed correctly.

*3 Available codes depend on what kind of media, versions and information are going to be displayed.

Troubleshooting guide

Symptom	Cause and Countermeasure
Cannot play	Check if the CD/USB device is inserted correctly.
	Check if the CD is scratched or dirty.
	Check if there is condensation inside the player. If there is, wait until the condensation is gone (about 1 hour) before using the player.
	If there is a temperature increase error, the player will play correctly after it returns to the normal temperature.
	If there is a mixture of music CD files (CD-DA data) and compressed audio files on a CD, only the music CD files (CD-DA data) will be played.
	Files with extensions other than “.MP3” or “.WMA” cannot be played. In addition, the character codes and number of characters for folder names and file names should be in compliance with the specifications.
	Check if the disc or file is generated in an irregular format. This may occur depending on the variation or the setting of the compressed audio file writing application or other text editing applications.
	Check if the finalization process, such as session close and disc close, is done for the disc.
	Check if the CD/USB device is protected by copyright.
Poor sound quality	Check if the CD is scratched or dirty.
It takes a relatively long time before the music starts playing.	If there are many folders or file levels on the CD/USB device, or if it is a multisession disc, some time may be required before the music starts playing.
Music cuts off or skips	The writing software and hardware combination might not match, or the writing speed, writing depth, writing width, etc., might not match the specifications. Try using the slowest writing speed.
Skipping with high bit rate files	Skipping may occur with large quantities of data, such as for high bit rate data.
Moves immediately to the next song when playing	If an unsupported compressed audio file has been given a supported extension like “.MP3”, or when play is prohibited by copyright protection, the player will skip to the next song.
Songs do not play back in the desired order	The playback order is the order in which the files were written by the writing software. Therefore, the files might not play in the desired order.
	Random/Shuffle may be active on the audio system or on the USB device.

CD, DVD or USB with Compressed Audio Files (models with Navigation System)

The file types supported by this system are MP3, WMA, AAC/M4A and ATRAC3.

Explanation of terms

- MP3 — MP3 is short for Moving Pictures Experts Group Audio Layer 3. MP3 is the most well known compressed digital audio file format. This format allows for near "CD quality" sound, but at a fraction of the size of normal audio files. MP3 conversion of an audio track can reduce the file size by approximately 10:1 ratio (Sampling: 44.1 kHz, Bit rate: 128 kbps) with virtually no perceptible loss in quality. The compression reduces certain parts of sound that seem inaudible to most people.
- WMA — Windows Media Audio (WMA) is a compressed audio format created by Microsoft as an alternative to MP3. The WMA codec offers greater file compression than the MP3 codec, enabling storage of more digital audio tracks in the same amount of space when compared to MP3s at the same level of quality.*
- AAC/M4A — Advanced Audio Coding (AAC) is a lossy audio compression format. Audio files that have been encoded with AAC are generally smaller in size and deliver a higher quality of sound than MP3.
- ATRAC3, ATRAC3 Plus — Adaptive Transform Acoustic Coding (ATRAC) is a lossy audio compression format developed by Sony.
- Bit rate — Bit rate denotes the number of bits per second used by a digital music file. The size and quality of a compressed digital audio file is determined by the bit rate used when encoding the file.
- Sampling frequency — Sampling frequency is the rate at which the samples of a signal are converted from analog to digital (A/D conversion) per second.
- Multisession — Multisession is one of the methods for writing data to media. Writing data once to the media is called a single session, and writing more than once is called a multisession.
- ID3/WMA Tag — The ID3/WMA tag is the part of the encoded MP3 or WMA file that contains information about the digital music file such as song title, artist, album title, encoding bit rate, track time duration, etc. ID3 tag information is displayed on the Album/Artist/Track title line on the display.

* Windows®, Windows Media® and Windows Vista® are registered trademarks or trademarks of Microsoft Corporation in the United States of America and/or other countries.

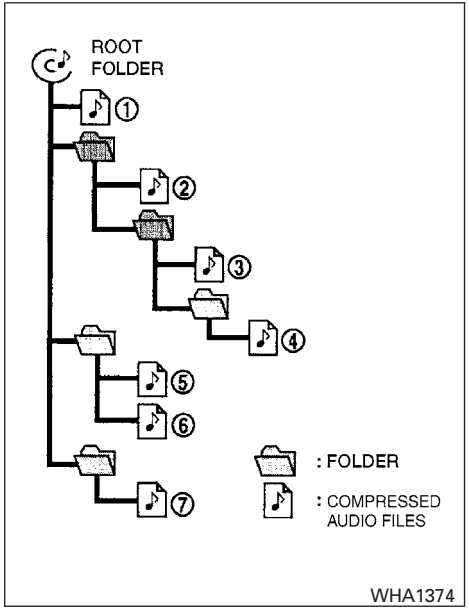

Playback order chart

Playback order

Music playback order of a CD, DVD or USB device with compressed audio files is as illustrated.

- The folder names of folders not containing compressed audio files are not shown in the display.
- If there is a file in the top level of the disc/USB, “Root Folder” is displayed.
- The playback order is the order in which the files were written by the writing software, so the files might not play in the desired order.

Specification chart

Supported media			CD, CD-R, CD-RW, DVD-ROM, DVD±R, DVD±RW, DVD±R DL, USB 2.0
Supported file systems			CD, CD-R, CD-RW, DVD-ROM, DVD±R, DVD±RW, DVD±R DL, ISO9660 LEVEL1, ISO9660 LEVEL2, Romeo, Joliet * ISO9660 Level 3 (packet writing) is not supported. * Files saved using the Live File System component (on a Windows Vista® operating system-based computer) are not supported.
			UDF Bridge (UDF 1.02 + ISO9660), UDF 1.5, UDF 2.0 * VDF 1.5/VDF 2.0 (packet writing) is not supported.
			USB memory: FAT16, FAT32
Supported versions*1	MP3	Version	MPEG1, MPEG2, MPEG2.5
		Sampling frequency	8 kHz - 48 kHz
		Bit rate	8 kbps - 320 kbps, VBR*4
	WMA*2	Version	WMA7, WMA8, WMA9
		Sampling frequency	32 kHz - 48 kHz
		Bit rate	32 kbps - 192 kbps, VBR*4
	AAC	Sampling frequency	8 kHz - 96 kHz
		Bit rate	16 kbps - 320 kbps, VBR*4
	ATRAC	Version	ATRAC3, ATRAC3 Plus
Tag information (Song title and artist name)			ID3 tag VER1.0, VER1.1, VER2.2, VER2.3, VER 2.4 (MP3 only)
			WMA tag (WMA only)
Folder levels			Folder levels: 8, Folders: 255 (including root folder), Files: 512 (Max. 255 files for one folder)
Text character number limitation			128 characters
Displayable character codes*3			01: ASCII, 02: ISO-8859-1, 03: UNICODE (UTF-16 BOM Big Endian), 04: UNICODE (UTF-16 Non-BOM Big Endian), 05: UNICODE (UTF-8), 06: UNICODE (Non-UTF 16 BOM Little Endian), 07: SHIFT-JIS

*1 Files created with a combination of 48 kHz sampling frequency and 64 kbps bit rate cannot be played.

*2 Protected WMA files (DRM) cannot be played.

*3 Available codes depend on what kind of media, versions and information are going to be displayed.

*4 When VBR files are played, the playback time may not be displayed correctly.

Troubleshooting guide

Symptom	Cause and Countermeasure
Cannot play	Check if the CD/DVD/USB device was inserted correctly.
	Check if the CD/DVD is scratched or dirty.
	Check if there is condensation inside the player. If there is, wait until the condensation is gone (about 1 hour) before using the player.
	If there is a temperature increase error, the player will play correctly after it returns to the normal temperature.
	If there is a mixture of music CD files (CD-DA data) and compressed audio files on a CD, only the music CD files (CD-DA data) will be played.
	Files with extensions other than “.MP3”, “.WMA”, “.AAC”, “.M4A” or “.AA3” cannot be played. In addition, the character codes and number of characters for folder names and file names should be in compliance with the specifications.
	Check if the disc or file is generated in an irregular format. This may occur depending on the variation or the setting of the compressed audio file writing application or other text editing applications.
	Check if the finalization process, such as session close and disc close, is done for the disc.
	Check if the CD/DVD/USB device is protected by copyright.
Poor sound quality	Check if the CD/DVD is scratched or dirty.
It takes a relatively long time before the music starts playing.	If there are many folders or file levels on the CD/DVD/USB device, or if it is a multisession disc, some time may be required before the music starts playing.
Music cuts off or skips	The writing software and hardware combination might not match, or the writing speed, writing depth, writing width, etc., might not match the specifications. Try using the slowest writing speed.
Skipping with high bit rate files	Skipping may occur with large quantities of data, such as for high bit rate data.
Moves immediately to the next song when playing	If an unsupported compressed audio file has been given a supported extension like “.MP3”, or when play is prohibited by copyright protection, the player will skip to the next song.
Songs do not play back in the desired order	The playback order is the order in which the files were written by the writing software. Therefore, the files might not play in the desired order.
	Random/Shuffle may be active on the audio system or on the USB device.

Compressed Video Files (models with Navigation System)

Explanation of terms

- DivX – DivX refers to the DivX® codec owned by Div, Inc. used for a lossy compression of video based on MPEG-4.
- AVI – AVI stands for Audio Video Interleave. It is standard file format originated by Microsoft Corporation. A .divx encoded file can be saved into the .avi file format for playback on this system if it meets the requirements stated in the table in this section. However, all .avi files are not playable on this system since different encodings can be used other than the DivX® codec.
- ASF – ASF stands for Advanced Systems Format. It is a file format owned by Microsoft Corporation. Note: Only .asf files that meet the requirements stated in the table in this section can be played.
- Bit rate — Bit rate denotes the number of bits per second used by a digital video files. The size and quality of a compressed digital audio file is determined by the bit rate used when encoding the file.

Requirements for Supporting Video Playback

Media	CD, CD-R, CD-RW, DVD, DVD±R, DVD±RW, DVD±RW DL, USB 2.0 Memory		
File Systems	CD, CD-R, CD-RW, DVD, DVD±R, DVD±RW, DVD±RW DL	ISO9660 LEVEL1, ISO9660 LEVEL2, Romeo, Joliet, UDF Bridge (UDF1.02+ISO9660), UDF1.5, UDF2.0 * ISO9660 Level 3 (packet writing) is not supported. * Files saved using the Live File System component (on a Windows Vista®-based computer) are not supported. * VDF1.5/VDF2.0 (packet writing) is not supported.	
	USB Memory	FAT16, FAT32	
File Types	.divx, .avi	Video Codecs	DivX3, DivX4, DivX5, DivX6
		Audio Codecs	MP3, MPEG2.5 Audio Layer3, AC3, LPCM
	.asf	Video Codec	ISO-MPEG4
		Audio Codec	G.726
Bit Rates	.divx, .avi	Maximum Average	4 Mbps
		Maximum Peak	8 Mbps
Resolution	.divx, .avi	Minimum	32 x 32
		Maximum	720 x 480
	.asf	Minimum	32 x 32
		Maximum	720 x 576

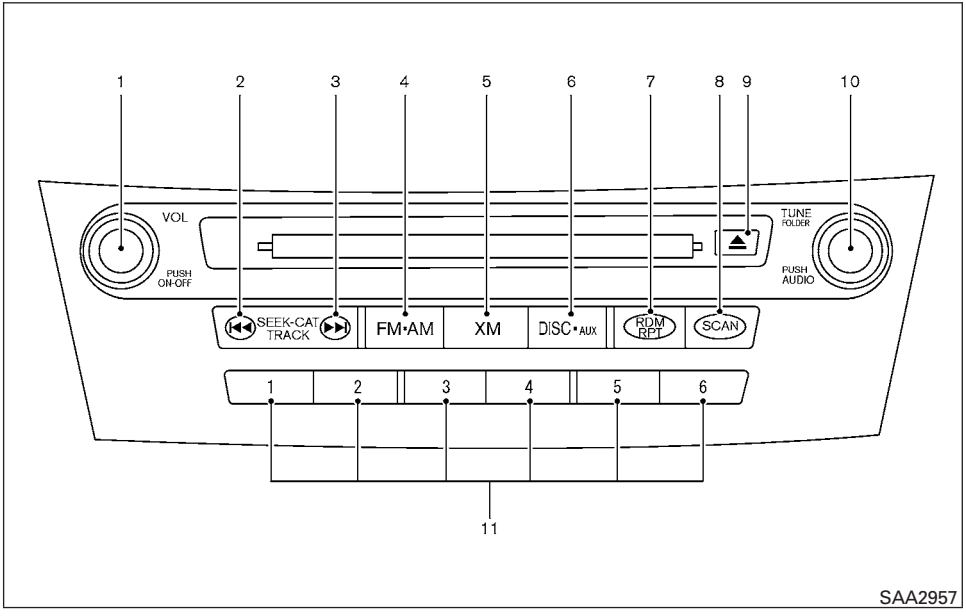

FM/AM/SAT RADIO WITH COMPACT DISC (CD) PLAYER

1. ON-OFF button/VOL (volume) control knob
2. ⏮ SEEK/CAT/TRACK button (back)
3. ⏭ SEEK/CAT/TRACK button (forward)
4. FM·AM button
5. XM button*
6. DISC·AUX button
7. RDM (random)/RPT (repeat) button
8. SCAN button
9. ⏏ CD eject button
10. AUDIO button/TUNE/FOLDER knob
11. Station select (1 - 6) buttons

*No satellite radio reception is available when the DISC•AUX button is pressed to access satellite radio stations unless optional satellite receiver and antenna are installed and a SiriusXM® Satellite Radio service subscription is active. Satellite radio is not available in Alaska, Hawaii and Guam.

For additional information, refer to "Audio operation precautions" in this section.

Audio main operation

Head unit

The auto loudness circuit enhances the low and high frequency ranges automatically in both radio reception and CD playback.

ON·OFF button/ VOL (volume) control knob

Place the ignition switch in the ACC or ON position and press the ON·OFF button while the system is off to call up the mode that was playing immediately before the system was turned off.

To turn the system off, press the ON·OFF button.

Turn the VOL (volume) control knob to adjust the volume.

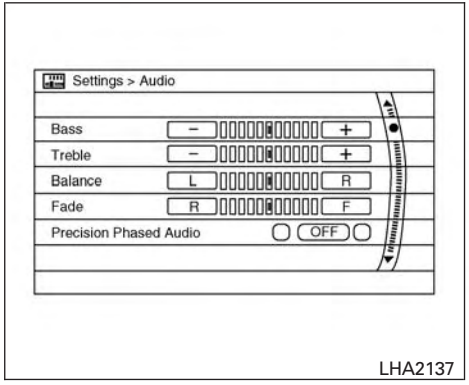

Models without Navigation System

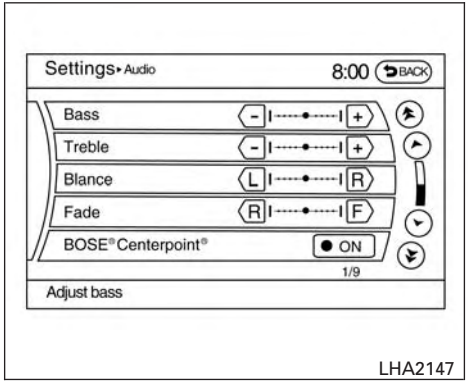

Models with Navigation System

Audio settings

Press the SETTING button and select the “Audio” key to adjust the following audio settings.

Bass/Treble/Balance/Fade

To adjust the speaker tone quality and sound balance, select the “Bass”, “Treble”, “Balance” or “Fade” key and adjust it with the INFINITI controller.

Fade adjusts the sound level between the front and rear speakers and Balance adjusts the sound between the right and left speakers.

The AUDIO button/ TUNE/FOLDER knob can also be used to change the bass, treble, balance and fade settings. Press the AUDIO button to change the mode as follows:

Bass → Treble → Balance → Fade

To adjust Bass, Treble, Balance and Fade, press the AUDIO button until the desired mode appears in the display. Turn the TUNE/FOLDER knob to adjust Bass and Treble to the desired level. You can also use the TUNE/FOLDER knob to adjust Fade and Balance modes.

Once you have adjusted the sound quality to the desired level, press the AUDIO button repeatedly until the radio or CD display reappears. If the AUDIO button is not pressed for approximately 10 seconds, the radio or CD display will automatically reappear.

BOSE® Centerpoint® (if so equipped)

When this item is turned to ON, an exciting surround sound effect is generated from a traditional stereo recording.

Surround Effect (models with Navigation System)

To adjust the surround sound volume, select “Surround Effect” key and adjust it with the INFINITI controller.

Speed Sensitive Vol.

The audio system’s volume is increased with the vehicle speed. Select the “Speed Sensitive Vol.” key and adjust the effect level with the INFINITI controller. The Speed Sensitive Volume function is turned off when the level is set to OFF. Increasing the value will cause the volume to increase faster with vehicle speed.

DivX® Registration Code (models with Navigation System)

The registration code for a device that is used to download DivX® files will be displayed on the

screen. If a disc is loaded or a USB memory is connected to the audio system, this function will not be activated.

Display Album Cover Art (models with Navigation System)

When this item is turned to ON, the album cover image is displayed when playing iPod® or MP3 music files through a CD, DVD or USB memory device. The image will not be displayed when the image is not properly embedded in the file or device.

Switching the display

Press the DISC·AUX button to switch the displays as follows:

- Models without Navigation System

iPod®/USB → CD → iPod®/USB

- Models with Navigation System

iPod®/USB → CD/DVD → Bluetooth® Audio → iPod®/USB

Linking Intelligent Key (models with Navigation System)

The audio settings can be memorized for each Intelligent Key. For additional information, refer to "Setting memory function" in the "Pre-driving checks and adjustments" section of this manual.

FM/AM/SAT radio operation

FM/AM band select

Pressing the FM·AM button will change the band as follows:

AM → FM1 → FM2 → AM

When the FM·AM button is pressed while the ignition switch is in the ACC or ON position, the radio will come on at the station last played.

The last station played will also come on when the ON·OFF button is pressed ON.

If a compact disc is playing when the FM·AM button is pressed, the compact disc will automatically be turned off and the last radio station played will come on.

The FM stereo indicator STEREO will illuminate during FM stereo reception. When the stereo broadcast signal is weak, the radio will automatically change from stereo to monaural reception.

XM band select

Pressing the XM button will change the band as follows:

XM1* → XM2* → XM3* → XM1

When the XM button is pressed while the ignition switch is in the ACC or ON position, the radio will come on at the station last played.

The last station played will also come on when the VOL/ON·OFF control knob is pressed ON.

*When the XM button is pressed, the satellite radio reception will not be available unless an optional satellite receiver and antenna are installed and a SiriusXM® Satellite Radio service subscription is active. Satellite radio is not available in Alaska, Hawaii and Guam.

If a compact disc is playing when the XM button is pressed, the compact disc will automatically be turned off and the last radio station played will come on.

TUNE/FOLDER (Tuning) knob

To manually tune the radio, turn the TUNE/FOLDER knob to the right or left.

|◀◀ ▶▶| SEEK·CAT/TRACK tuning button

For AM or FM:

Press the SEEK·CAT/TRACK button |◀◀ or ▶▶| to tune from high to low or low to high frequencies and stop at the next broadcasting station.

For XM:

Press the SEEK·CAT/TRACK button |◀◀ or ▶▶| to go to the first channel of the previous or next category.

During satellite radio reception, the following notices will be displayed under certain conditions.

- NO SIGNAL (No signal is received while the SAT tuner is connected)
- OFF AIR (Broadcasting signed off)
- CHECK ANTENNA (Antenna connection error)
- LOADING (When the initial setting is performed)
- UPDATING (When the satellite radio subscription is not active)

SCAN tuning

Press the SCAN button to stop at each broadcasting station for 5 seconds. Pressing the SCAN button again during this 5 second period will stop scan tuning and the radio will remain tuned to that station. If the SCAN button is not pressed within 5 seconds, scan tuning moves to the next station.

1 to 6 Station memory operations

Six stations can be set for the AM band. Twelve stations can be set for the FM band (6 for FM1, 6 for FM2). Eighteen channels can be set for the satellite radio (6 for XM1, 6 for XM2, 6 for XM3).

1. Choose the radio band AM, FM1 or FM2 using the FM·AM select button, or choose the satellite band XM1, XM2 or XM3 using the XM button.
2. Tune to the desired station using manual, SEEK or SCAN tuning. Press and hold any of the desired station memory buttons (1 – 6) until the preset number is updated on the display and the sound is briefly muted.
3. The channel indicator will then come on and the sound will resume. Programming is now complete.
4. Other buttons can be set in the same manner.

If the battery cable is disconnected, or if the fuse opens, the radio memory will be canceled. In that case, reset the desired stations.

List (AM and FM)

Select the “List” key using the INFINITI controller or touch-screen to see a list of the presets in the AM, FM1 or FM2 preset banks.

Text (SiriusXM® Satellite Radio) (models without Navigation System)

Select the “Text” key with the INFINITI controller and then press the ENTER button while the satellite radio is being played to display the text information listed below:

- CH Name
- Category
- Name
- Title
- Other

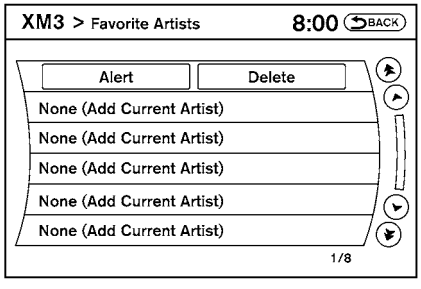

LHA1375

Menu (SiriusXM Satellite Radio) (models with Navigation System)

Select the “Menu” key using the INFINITI controller or touch-screen to see a list of options:

- Preset List – Displays the list of presets. Press and hold the touch-screen or ENTER button on the INFINITI controller to save a preset.
- Customize Channel List – Deselect channels to skip while using the TUNE/FOLDER knob.
- Favorite Artist & Songs
  - Tags the current artist or song playing on SiriusXM® Satellite Radio as a favorite.
  - Turn the Alert ON to indicate whenever a favorite artist or song is playing on SiriusXM® Satellite Radio. The audio system must be playing SiriusXM® Satellite Radio for this feature to work.
  - Delete a favorite artist or song.
- Categories – Displays a category list for SiriusXM® Satellite Radio. Select a category to select the first channel for that category.
- Direct Tune – Tune to a channel by entering the channel number.

Radio data system (RDS)

RDS stands for Radio Data System, and is a data information service transmitted by some radio stations on the FM band (not AM band). Currently, most RDS stations are in large cities, but many stations are now considering broadcasting RDS data.

RDS can display:

- Station call sign, such as “WHFR 98.3”.
- Station name, such as “The Groove”.
- Music or programming type such as “Classical”, “Country”, or “Rock”.
- Station specific text.

If the station broadcasts RDS information, the text information is automatically displayed.

Compact disc (CD) player operation

Place the ignition in the ACC or ON position and insert the compact disc into the slot with the label side facing up. The compact disc will be guided automatically into the slot and start playing.

If the radio is already operating, it will automatically turn off and the compact disc will play.

If the system has been turned off while the compact disc was playing, pressing the ON·OFF button will start the compact disc.

DISC·AUX button

When the DISC·AUX button is pressed with the system off and the compact disc loaded, the system will turn on and the compact disc will start to play.

When the DISC·AUX button is pressed with the compact disc loaded but the radio playing, the radio will automatically be turned off and the compact disc will start to play.

SEEK•CAT/TRACK button

When the SEEK•CAT/TRACK button is pressed ⏮ while a compact disc is playing, the track being played returns to its beginning. Press several times to skip back through tracks. The compact disc will go back the number of times the button is pressed.

When the SEEK•CAT/TRACK button is pressed ⏭ while the compact disc is playing, the next track will start to play from its beginning. Press several times to skip through tracks. The compact disc will advance the number of times the button is pressed. (When the last track on the compact disc is skipped through, the first track will be played.)

The INFINITI controller can also be used to select tracks when a CD is playing.

SEEK•CAT/TRACK (Rewind and Fast Forward) button

Press and hold the SEEK•CAT/TRACK button ⏮ to reverse the track as it is playing. Press and hold the SEEK•CAT/TRACK button ⏭ to fast forward the track as it is playing. When the button is released, the compact disc will return to normal play speed.

TUNE/FOLDER knob

While playing a CD with compressed audio files, turn the TUNE/FOLDER knob right or left to play the next or previous folder.

Text (models without Navigation System)

Select the “Text” key using the INFINITI controller and then press the ENTER button while the CD is being played to display the music information below.

CD:

- Disc title
- Track title

CD with compressed audio files:

- Folder title
- File title
- Song title
- Album title
- Artist

Menu (models with Navigation System)

When the “Menu” key on the display is selected while the CD is being played, the menu screen will be displayed. The following menu options are available.

- Folder List (for CD with compressed audio files)
  Displays the folder list.
- Track List
  Displays the track list.
- Play Mode
  Select a play mode from the following items.
  - Normal
  - 1 Folder Repeat (for CD with compressed audio files)
  - 1 Track Repeat
  - 1 Disc Random
  - 1 Folder Random (for CD with compressed audio files)

RDM·RPT (random and repeat) button

Press the RDM·RPT button while a compact disc is playing to change the play pattern as follows:

CD

Normal → 1 Track Repeat → 1 Disc Random → Normal

CD with compressed audio files

Normal → 1 Folder Repeat → 1 Track Repeat → 1 Disc Random → 1 Folder Random → Normal

Normal: No repeat or random pattern is applied.
1 Track Repeat: the current track playing will be repeated.
1 Disc Random: all tracks will be played randomly.
1 Folder Repeat: the folder currently being accessed will be repeated.
1 Folder Random: the tracks in the current folder being accessed will be played randomly.

⏏ CD EJECT button

When the ⏏ button is pressed with the compact disc loaded, the compact disc will be ejected.

When the ⏏ button is pressed while the compact disc is being played, the compact disc will eject and the system will turn off.

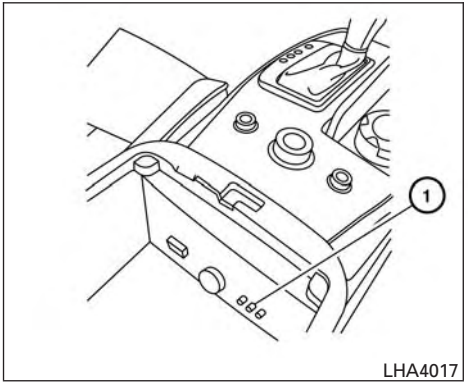

Front AUX (auxiliary) input jacks (inside center console)

The front auxiliary input jacks are located inside the center console ①. NTSC compatible devices such as video games, camcorders and portable video players can be connected to the auxiliary input jacks. Audio devices, such as some MP3 players, can also be connected to the system through the auxiliary input jacks.

The auxiliary input jacks are color coded for identification purposes:

- Red – right channel audio input
- White – left channel audio input
- Yellow – video input

Before connecting a device to the auxiliary input jacks, turn off the power of the portable device.

With a compatible device connected to the auxiliary input jacks, press the DISC·AUX button repeatedly until the AUX mode appears in the display. The output from the device will be played through the display (when the vehicle is in the (P) Park position and the parking brake engaged) and audio system.

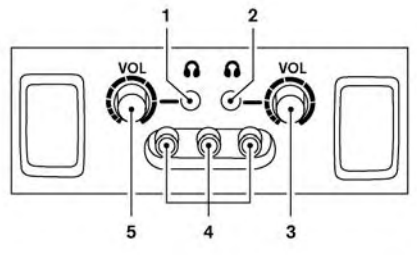

LHA2135

1. Left rear passenger's headphone jack
2. Right rear passenger's headphone jack
3. Right rear passenger's power on button / volume control knob
4. Rear auxiliary input jacks
5. Left rear passenger's power on button / volume control knob

Rear AUX (auxiliary) input jacks (on back of center console)

The rear auxiliary input jacks are located on the back of the center console. NTSC compatible devices such as video games, camcorders and portable video players can be connected to the auxiliary input jacks. Audio devices, such as some MP3 players, can also be connected to the system through the auxiliary input jacks.

The auxiliary input jacks are color coded for identification purposes:

- Red – right channel audio input
- White – left channel audio input
- Yellow – video input

Before connecting a device to the auxiliary input jacks, turn off the power of the portable device.

When headphones are plugged into the rear jacks, sound can be turned on by pressing the volume control knob and then turning to increase or decrease the volume.

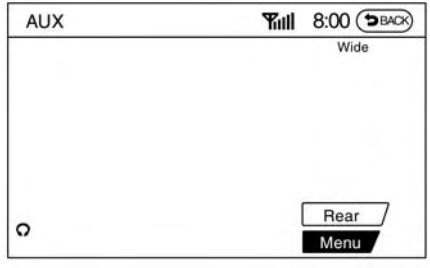

LHA2150

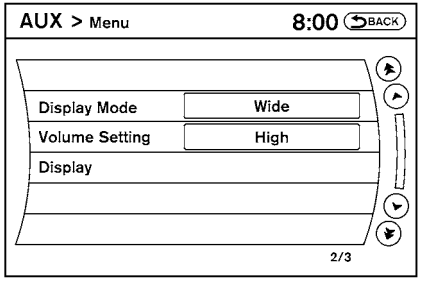

LHA1394

AUX settings

Select the "Menu" key using the INFINITI controller.

The display mode can be set to Normal, Wide or Cinema. The volume setting can be set to Low, Medium or High.

Additional features

For additional information about the iPod® player available with this system, refer to "iPod® player operation without navigation system" or "iPod® player operation with navigation system" in this section.

For additional information about the USB (Universal Serial Bus) Connection Port available with this system, refer to "USB (Universal Serial Bus) Connection Port (models without navigation system)" or "USB (Universal Serial Bus) Connection Port (models with navigation system)" in this section.

For additional information about the Bluetooth® streaming audio feature available with this system, refer to "Bluetooth® streaming audio" in this section.

DIGITAL VERSATILE DISC (DVD) PLAYER OPERATION (models with Navigation System)

Precautions

Start the engine when using the DVD entertainment system.

Movies will not be shown on the front display while the vehicle is in any drive position to reduce driver distraction. Audio is available when a movie is played. To view movies on the front display, stop the vehicle in a safe location, move the shift lever to the P (Park) position and apply the parking brake.

⚠ WARNING

- **The driver must not attempt to operate the DVD system or wear the headphones while the vehicle is in motion so that full attention may be given to vehicle operation.**
- **Do not attempt to modify the system to display a movie on the front screen while the vehicle is being driven. Doing so may distract the driver and may cause a collision and serious personal injury or death.**

⚠ CAUTION

- **Only operate the DVD while the vehicle engine is running. Operating the DVD for extended periods of time with the engine OFF can discharge the vehicle battery.**
- **Do not allow the system to get wet. Excessive moisture such as spilled liquids may cause the system to malfunction.**
- **While playing VIDEO-CD media, this DVD player does not guarantee complete functionality of all VIDEO-CD formats.**

Display settings

To adjust the front display mode, press the SETTING button while the DVD is playing. Select the "Others" key with the INFINITI controller or with the touch-screen, then select the "Display" key.

To adjust the display ON/OFF, brightness, tint, color and contrast, select the "Display Adjustment" key with the INFINITI controller or with the touch-screen and then select the key of the setting you wish to adjust. After the desired changes have been made, press the ⮌ BACK button to save the settings.

Playing a DVD

DISC·AUX button

Park the vehicle in a safe location for the front seat occupants to operate the DVD drive while watching the images.

Press the DISC·AUX button until the DVD mode is active on the display.

When a DVD is loaded, it will be replayed automatically.

The operation screen will be turned on when the DISC·AUX button is pressed while a DVD is playing. The operation screen will turn off automatically after a period of time. To turn it on again, press the DISC·AUX button.

DVD operation keys

When the DVD is playing without the operation screen being shown, you may use the touch-screen to select items from the displayed video. You may also use the INFINITI controller to select an item from the displayed video. When the operation screen is being shown, use the INFINITI controller or the touch-screen to select an item from the displayed menus.

PAUSE

Select the ⏸ key to pause the DVD. To resume playing the DVD, use the ▶ key.

PLAY

Select the ▶ key to start playing the DVD or resume playing the DVD after it has been paused.

STOP

Select the ■ key to stop playing the DVD.

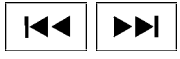

NEXT/PREVIOUS CHAPTER

Select the ⏭ key to skip the chapter(s) of the disc forward. Select the ⏮ key to skip the chapter(s) of the disc backward. The chapters will advance forward or backward the number of times the respective key is touched or selected with the INFINITI controller.

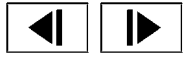

CM SKIP

This function is only for DVD-VIDEO and DVD-VR. Select the ⏭ or ⏮ key to fast forward or rewind a set interval of time based on the CM settings. For additional information, refer to "DVD settings" in this section.

Top Menu

When the "Top Menu" key is selected while the DVD is playing, the top menu specific to each disc will be displayed. For additional information, refer to the instructions attached to the disc.

DVD settings

Select the "Settings" key to adjust the following settings:

- **Key** (DVD-VIDEO)
  Displays the operation keys for the specific DVD menu.
  - Select the directional keys to move the cursor on the DVD menu.
  - Select the "Enter" key to fix the selected menu item.
  - Select the "Move" key to move the location of the operation keys on the screen.

– Select the “Back” key to return to the previous menu screen.

– Select the “Hide” key to hide the operation keys.

- **Title Menu** (DVD-VIDEO)
  Some menus specific to each disc will be shown. For additional information, refer to the instructions attached to the disc.
- **Title Search** (DVD-VIDEO, DVD-VR)
  The scene with the specified title will be displayed the number of times the “+” or “-” side is selected.
- **Group Search** (VIDEO CD)
  The scene with the specified group will be displayed the number of times the “+” or “-” side is selected.
- **10 Key Search** (DVD-VIDEO, VIDEO CD, CD-DA, DVD-VR)
  Select the “10 Key Search” key to open the number entry screen. Input the number you want to search for and select the “OK” key. The specified Title/Chapter or Group/Track will be played.

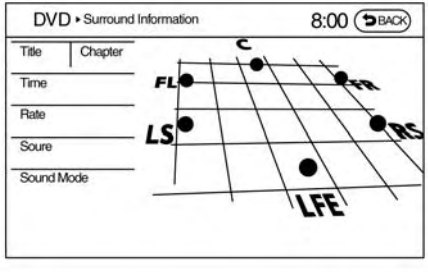

LHA2166

- **Surround Information**
- **Angle** (DVD-VIDEO)
  If the DVD contains different angles (such as moving images), the current image angle can be switched to another one. Select the “Angle” key and use the “+” or “-” key to change the angle.
- **Angle Mark** (DVD-VIDEO)
  When this item is turned on, an angle mark will be shown on the bottom of the screen if the scene can be seen from a different angle.
- **Menu Skip** (DVD-VIDEO)
  DVD menus are automatically configured and the contents will be played directly when the “Menu Skip” key is turned on. Note that some discs may not be played directly even if this item is turned on.
- **CM Skip** (DVD-VIDEO)
  Select the “CM Skip” key to choose the setting time for CM backward and forward operations. Use the “+” or “-” key to choose a setting time of 15, 30 or 60 seconds.
- **DRC** (DVD-VIDEO, DVD-VR)
  DRC (Dynamic Range Compression) automatically adjusts the soundtrack volume level to maintain a more even sound to the speakers.
- **DOWN MIX**
- **DVD Language** (DVD-VIDEO, VIDEO CD)
  Select the “DVD Language” key to open the number entry screen. Input the number corresponding to the preferred language and select the “OK” key. The DVD top menu language will be changed to the one specified.

- **Display**
  Adjust the image quality of the screen by selecting the preferred adjustment items.
- **Audio**
  Choose the preferred language for the audio.
- **Subtitle** (DVD-VIDEO, DVD-VR)
  Choose the preferred language for the subtitles.
- **Display Mode** (DVD-VIDEO, VIDEO CD, DVD-VR)
  Choose from the “Full”, “Wide”, “Normal” or “Cinema” mode.
- **Title List** (DVD-VR)
  Choose the preferred title from the list.
- **Play Mode**
  Choose the preferred play mode. The available options are “Normal” and “1 Chapter Repeat”.
- **PG/PL Mode** (DVD-VR)
  Choose from the “PG” or “PL” mode.

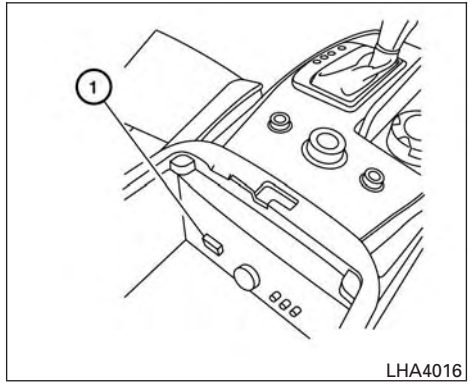

USB (Universal Serial Bus) CONNECTION PORT (models without Navigation System) (if so equipped)

Connecting a device to the USB connection port

WARNING

Do not connect, disconnect, or operate the USB device while driving. Doing so can be a distraction. If distracted you could lose control of your vehicle and cause an accident or serious injury.

CAUTION

- **Do not force the USB device into the USB port. Inserting the USB device tilted or up-side-down into the port may damage the port. Make sure that the USB device is connected correctly into the USB port.**
- **Do not grab the USB port cover (if so equipped) when pulling the USB device out of the port. This could damage the port and the cover.**
- **Do not leave the USB cable in a place where it can be pulled unintentionally. Pulling the cable may damage the port.**

Refer to your device manufacturer’s owner information regarding the proper use and care of the device.

The USB port is located in the center console. Insert the USB device into the connection port ①.

When a compatible storage device is plugged into the connection port, compatible audio files on the storage device can be played through the vehicle’s audio system.

Audio file operation

DISC•AUX button

Place the ignition switch in the ON or ACC position and press the DISC•AUX button to switch to the USB input mode. If another audio source is playing and a USB memory device is inserted, press the DISC•AUX button repeatedly until the center display changes to the USB memory mode.

If the system has been turned off while the USB memory was playing, press the ON-OFF button to restart the USB memory.

⏮ ⏭ SEEK/CAT and TRACK (Reverse or Fast Forward) buttons

Press and hold the SEEK/CAT ⏮ (rewind) button or TRACK ⏭ (fast forward) button for 1.5 seconds while an audio file on the USB device is playing to reverse or fast forward the track being played. The track plays at an increased speed while reversing or fast forwarding. When the button is released, the audio file returns to normal play speed.

⏮ ⏭ SEEK/CAT and TRACK buttons

Press the SEEK/CAT button ⏮ while an audio file on the USB device is playing to return to the beginning of the current track. Press the SEEK/CAT button ⏮ several times to skip backward several tracks.

Press the TRACK button ⏭ while an audio file on the USB device is playing to advance one track. Press the TRACK button ⏭ several times to skip forward several tracks. If the last track in a folder on the USB device is skipped, the first track of the next folder is played.

Folder selection

To change to another folder in the USB memory, turn the TUNE/FOLDER knob or choose a folder displayed on the screen.

RPT (repeat)/RDM (random) button

When the RPT (repeat)/RDM (random) button is pressed while the USB memory is playing, the play pattern can be changed as follows:

Repeat All → 1 Folder Repeat → 1 Track Repeat → All Random → 1 Folder Random → Repeat All

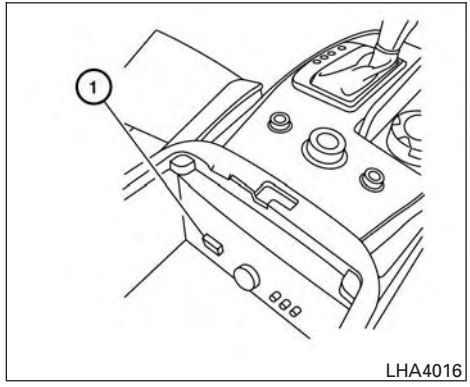

LHA4016

USB (Universal Serial Bus) CONNECTION PORT (models with Navigation System) (if so equipped)

Connecting a device to the USB connection port

⚠ WARNING

Do not connect, disconnect, or operate the USB device while driving. Doing so can be a distraction. If distracted you could lose control of your vehicle and cause an accident or serious injury.

⚠CAUTION

- **Do not force the USB device into the USB port. Inserting the USB device tilted or up-side-down into the port may damage the port. Make sure that the USB device is connected correctly into the USB port.**
- **Do not grab the USB port cover (if so equipped) when pulling the USB device out of the port. This could damage the port and the cover.**
- **Do not leave the USB cable in a place where it can be pulled unintentionally. Pulling the cable may damage the port.**

Refer to your device manufacturer's owner information regarding the proper use and care of the device.

The USB port is located in the center console. Insert the USB device into the connection port ①.

When a compatible storage device is plugged into the connection port, compatible audio files on the storage device can be played through the vehicle's audio system.

Audio file operation

DISC•AUX button

Place the ignition switch in the ON or ACC position and press the DISC•AUX button to switch to the USB input mode. If another audio source is playing and a USB memory device is inserted, press the DISC•AUX button repeatedly until the center display changes to the USB memory mode.

If the system has been turned off while the USB memory was playing, press the ON-OFF button to restart the USB memory.

⏮ ⏭ SEEK/CAT and TRACK (Reverse or Fast Forward) buttons

Press and hold the SEEK/CAT ⏮ (rewind) button or TRACK ⏭ (fast forward) button for 1.5 seconds while an audio file on the USB device is playing to reverse or fast forward the track being played. The track plays at an increased speed while reversing or fast forwarding. When the button is released, the audio file returns to normal play speed.

⏮ ⏭ SEEK/CAT and TRACK buttons

Press the SEEK/CAT button ⏮ while an audio file on the USB device is playing to return to the beginning of the current track. Press the SEEK/CAT button ⏮ several times to skip backward several tracks.

Press the TRACK button ⏭ while an audio file on the USB device is playing to advance one track. Press the TRACK button ⏭ several times to skip forward several tracks. If the last track in a folder on the USB device is skipped, the first track of the next folder is played.

Folder selection

To change to another folder in the USB memory, turn the TUNE/FOLDER knob or choose a folder displayed on the screen.

RPT (repeat)/RDM (random) button

When the RPT (repeat)/RDM (random) button is pressed while the USB memory is playing, the play pattern can be changed as follows:

Normal → 1 Folder Repeat → 1 Track Repeat → All Random → 1 Folder Random → Normal

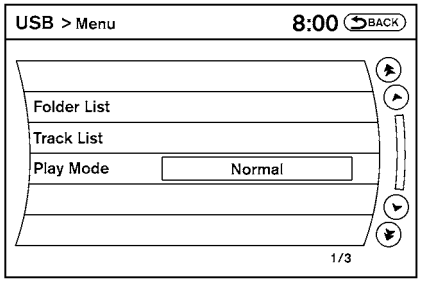

LHA1294

Menu (models with Navigation System)

There are some options available during playback. Select one of the following that are displayed on the screen, if necessary. Refer to the following information for each item.

- Movie Playback
  Switch to the movie playback mode. This item is displayed only when the USB memory contains movie files.
  The shift lever must be in Park (P) with the parking brake engaged to watch movies from a USB device.
- Folder List/Track List
  Displays the folder or track list. The “Movie Playback” key is also displayed in this list screen and enables you to switch to the movie playback mode.
- Play Mode
  Choose the preferred play mode using the INFINITI controller or the touch-screen.

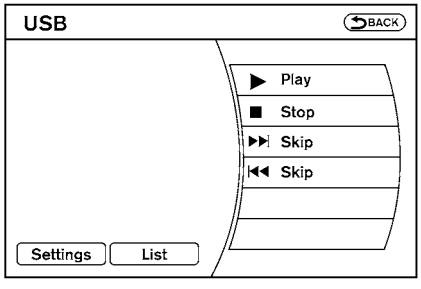

LHA1379

Movie file operation

Park the vehicle in a safe location for the front seat occupants to operate the USB memory while watching the images.

DISC·AUX button

When the DISC·AUX button is pressed with the system off and the USB memory inserted, the system will turn on. If another audio source is playing and the USB memory is inserted, press the DISC·AUX button repeatedly until the center display changes to the USB memory mode.

Operation keys

To operate the USB memory, select the desired key displayed on the display screen.

- ⏸ Pause

  Select the ⏸ key to pause the movie file. To resume playing the movie file, use the ▶ key.

- ▶ Play

  Select the ▶ key to start playing the movie file or resume the movie file if it has been paused.

- ■ Stop

  Select the ■ key to stop playing the movie file.

- ▶▶| Next Chapter/Fast Forward

  Select the ▶▶| key to skip the chapter(s) of the disc forward. The chapters will advance the number of times the key is selected. Press and hold the key to fast forward the chapter.

- |◀◀ Previous Chapter/Rewind

  Select the |◀◀ key to skip the chapter(s) of the disc backward. The chapters will go back the number of times the key is selected. Press and hold the key to rewind the chapter.

List

Select the “List” key on the movie file operation screen to display the file list.

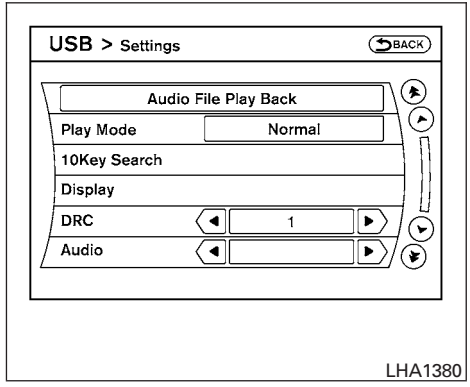

Settings

Select the “Settings” key to adjust the following settings:

- **Audio File Playback**
  Switch to the audio playback mode. This item is displayed only when the USB memory contains audio files.

- **Play Mode**
  Choose between the “Normal” or “1 Track Repeat” play modes.

- **10 Key Search**
  Select the “10 Key Search” key to open the number entry screen. Input the number you want to search for and the specified file or folder will be played.
- **Display**
  Adjust the image quality of the screen.
- **DRC**
  DRC (Dynamic Range Compression) automatically adjusts the soundtrack volume level to maintain a more even sound to the speakers.
- **Audio**
  Choose the preferred language of the audio.
- **Subtitle**
  Choose the preferred language of the subtitles.
- **Display Mode**
  Choose between the “Normal”, “Wide”, “Cinema” or “Full” display modes.

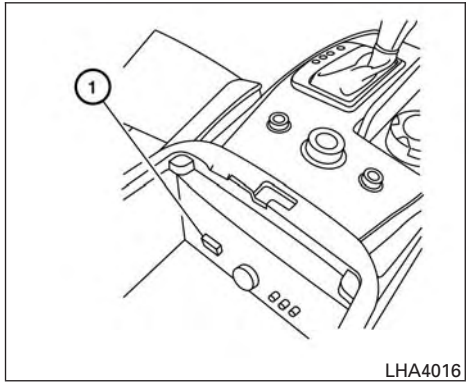

LHA4016

iPod®* PLAYER OPERATION WITHOUT NAVIGATION SYSTEM (if so equipped)

Connecting iPod®

⚠ WARNING

Do not connect, disconnect or operate the USB device while driving. Doing so can be a distraction. If distracted you could lose control of your vehicle and cause an accident or serious injury.

⚠ CAUTION

- **Do not force the USB device into the USB port. Inserting the USB device tilted or up-side-down into the port may damage the port. Make sure that the USB device is connected correctly into the USB port.**
- **Do not grab the USB port cover (if so equipped) when pulling the USB device out of the port. This could damage the port and the cover.**
- **Do not leave the USB cable in a place where it can be pulled unintentionally. Pulling the cable may damage the port.**

Refer to your device manufacturer’s owner information regarding the proper use and care of the device.

To connect an iPod® to the vehicle so that the iPod® can be controlled with the audio system controls and display screen, use the USB connection port located in the center console. Connect the iPod®-specific end of the cable to the iPod® and the USB end of the cable to the USB connection port on the vehicle ①. If your iPod® supports charging via a USB connection, its battery will be charged while connected to the vehicle with the ignition switch in the ACC or ON position.

While connected to the vehicle, the iPod® can only be operated by the vehicle audio controls.

To disconnect the iPod® from the vehicle, remove the USB end of the cable from the USB connection port on the vehicle, then remove the cable from the iPod®.

* iPod® is a trademark of Apple Inc., registered in the U.S. and other countries.

Compatibility

The following models are compatible:

- iPod® 5th Generation - version 1.2.1
- iPod® Classic - version 1.1
- iPod® Touch - version 2.1.0
- iPod® Nano - 1st generation version 1.3.1
- iPod® Nano - 2nd generation version 1.1.3
- iPod® Nano - 3rd generation version 1.0.2

Make sure that your iPod® firmware is updated to the version indicated above.

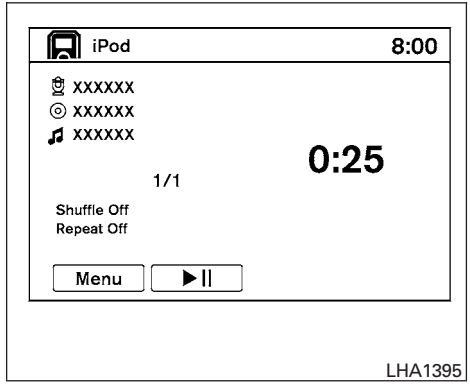

Audio main operation

Place the ignition switch in the ACC or ON position. Press the AUX button repeatedly to switch to the iPod® mode.

If the system has been turned off while the iPod® was playing, pressing the ON·OFF button will start the iPod®.

DISC▪AUX button

When the DISC▪AUX button is pressed with the system off and the iPod® connected, the system will turn on. If another audio source is playing and the iPod® is connected, press the DISC▪AUX button repeatedly until the center display changes to the iPod® mode.

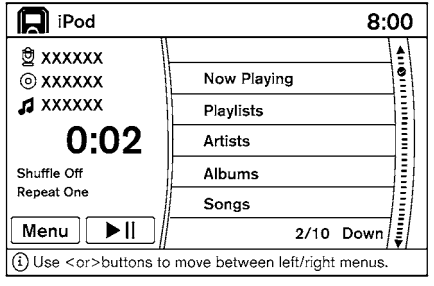

LHA1396

Interface

The interface for iPod® operation shown on the vehicle center display is similar to the iPod® interface. Use the INFINITI controller and the ⮌ BACK button to play the iPod® with your favorite settings.

The following items can be chosen from the menu list screen. For additional information, refer to the iPod® Owner's Manual.

- Playlists
- Podcasts
- Songs
- Albums
- Artists
- Genres
- Composers
- Audiobooks

The following keys shown on the screen are also available:

- MENU: returns to the previous screen.
- ▶II : plays/pauses the music selected.

⏮ ⏭ SEEK/CAT and TRACK buttons

When the ⏮ SEEK/CAT button or ⏭ TRACK button is pressed for less than 1.5 seconds while the iPod® is playing, the next track or the beginning of the current track on the iPod® will be played.

When the ⏮ SEEK/CAT button or ⏭ TRACK button is pressed for more than 1.5 seconds while the iPod® is playing, the iPod® will play while fast forwarding or rewinding. When the button is released, the iPod® will return to the normal play speed.

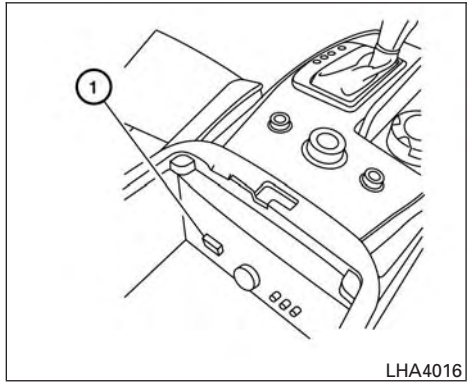

LHA4016

iPod®* PLAYER OPERATION WITH NAVIGATION SYSTEM (if so equipped)

Connecting iPod®

⚠ WARNING

Do not connect, disconnect or operate the USB device while driving. Doing so can be a distraction. If distracted you could lose control of your vehicle and cause an accident or serious injury.

⚠ CAUTION

- **Do not force the USB device into the USB port. Inserting the USB device tilted or up-side-down into the port may damage the port. Make sure that the USB device is connected correctly into the USB port.**
- **Do not grab the USB port cover (if so equipped) when pulling the USB device out of the port. This could damage the port and the cover.**
- **Do not leave the USB cable in a place where it can be pulled unintentionally. Pulling the cable may damage the port.**

Refer to your device manufacturer's owner information regarding the proper use and care of the device.

To connect an iPod® to the vehicle so that the iPod® can be controlled with the audio system controls and display screen, use the USB connection port located in the center console. Connect the iPod®-specific end of the cable to the iPod® and the USB end of the cable to the USB connection port on the vehicle ①. If your iPod® supports charging via a USB connection, its battery will be charged while connected to the vehicle with the ignition switch in the ACC or ON position.

While connected to the vehicle, the iPod® can only be operated by the vehicle audio controls.

To disconnect the iPod® from the vehicle, remove the USB end of the cable from the USB connection port on the vehicle, then remove the cable from the iPod®.

* iPod® is a trademark of Apple Inc., registered in the U.S. and other countries.

Compatibility

The following models are compatible:

- iPod® 5th Generation (firmware version 1.2.3 or later)
- iPod® Classic (firmware version 1.1.1 or later)
- iPod® Touch (firmware version 2.0.0 or later)*
- iPod® nano - 1st generation (firmware version 1.3.1 or later)
- iPod® nano - 2nd generation (firmware version 1.1.3 or later)
- iPod® nano - 3rd generation (firmware version 1.1.3 or later)
- iPod® nano - 4th generation (firmware version 1.0.4 or later)
- iPod® nano - 5th generation (firmware version 1.0.1 or later)

* Some features of this iPod® may not be fully functional.

Make sure that your iPod® firmware is updated to the version indicated above.

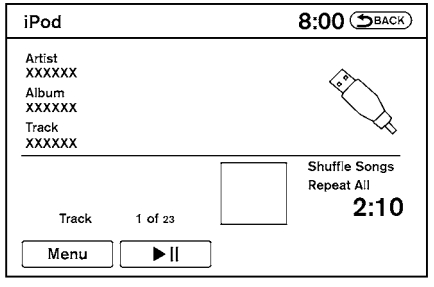

LHA1397

Audio main operation

Place the ignition switch in the ACC or ON position. Press the DISC·AUX button repeatedly to switch to the iPod® mode.

If the system has been turned off while the iPod® was playing, pressing the ON·OFF button will start the iPod®.

DISC·AUX button

When the DISC·AUX button is pressed with the system off and the iPod® connected, the system will turn on. If another audio source is playing and the iPod® is connected, press the DISC·AUX button repeatedly until the center display changes to the iPod® mode.

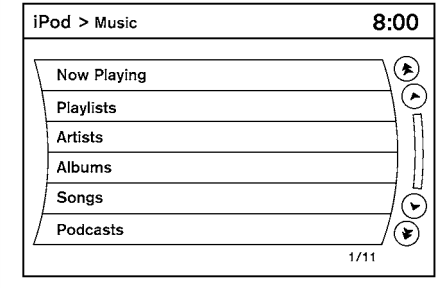

LHA1398

Interface

The interface for iPod® operation shown on the vehicle center display is similar to the iPod® interface. Use the INFINITI controller and the ⮌ BACK button to play the iPod® with your favorite settings. The touch-screen can also be used to control your favorite settings.

The following items can be chosen from the menu list screen. For additional information, refer to the iPod® Owner's Manual.

- Now Playing
- Playlists
- Artists

- Albums
- Songs
- Podcasts
- Genres
- Composers
- Audiobooks
- Shuffle Songs
- Play Mode

The following keys shown on the screen are also available:

- MENU: returns to the previous screen.
- ▶II : plays/pauses the music selected.

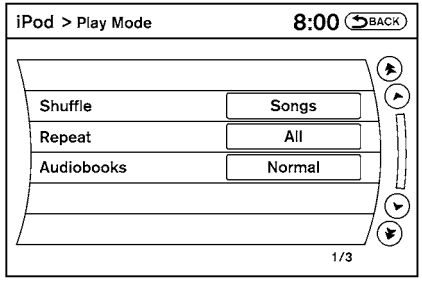

LHA1315

Play mode

While the iPod® is playing, select the "Menu" key to display the iPod® menu. Select the "Play Mode" key to display the Play Mode screen and adjust the settings for Shuffle, Repeat and Audiobooks. For additional information, refer to the iPod® Owner's Manual.

⏮ ⏭ SEEK•CAT/TRACK buttons

When the SEEK•CAT/TRACK button is pressed ⏮ or ⏭ for less than 1.5 seconds while the iPod® is playing, the next track or the beginning of the current track on the iPod® will be played.

When the SEEK•CAT/TRACK button is pressed ⏮ or ⏭ for more than 1.5 seconds while the iPod® is playing, the iPod® will play while fast forwarding or rewinding. When the button is released, the iPod® will return to the normal play speed.

The INFINITI controller can also be used to select tracks when the iPod® is playing.

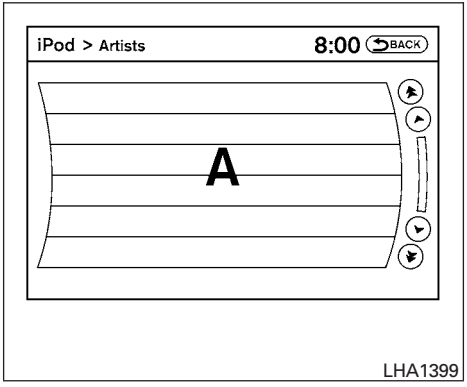

Scrolling menus

While navigating long lists of artists, albums or songs in the music menu, it is possible to scroll the list by the first letter. To activate letter indexing, perform one of the following:

- Turn the INFINITI controller quickly.
- Press and hold the up/down directional arrows on the INFINITI controller.
- Touch and hold the page up/down arrows on the touch-screen.

To exit the scrolling by letter mode, perform one of the following:

- Press the ENTER button on the INFINITI controller.
- Press the ENTER button on the steering wheel.
- Do not touch the controls for 2 seconds.

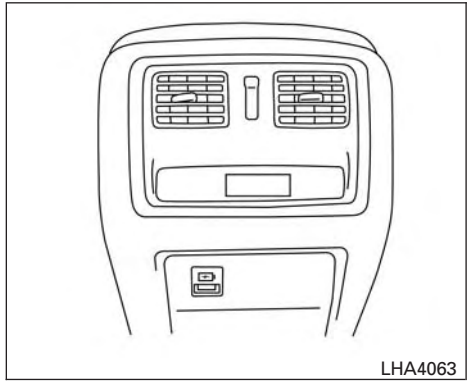

2nd row

USB/iPod® CHARGING PORTS

There are USB/iPod® charging ports located in the 2nd row on the back of the center console and in the 3rd row located above the cup holders. These ports will charge compatible devices.

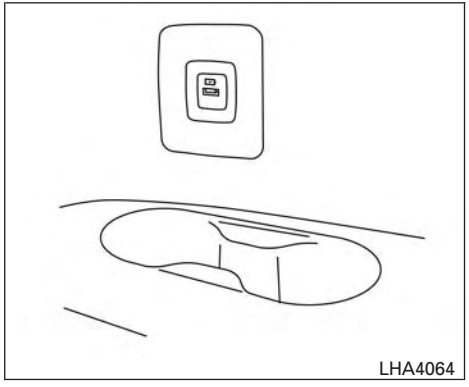

3rd row

NOTE:

The USB/iPod® charging ports will not operate with the display screen or the INFINITI Mobile Entertainment System. Only the USB connection port located in the console box will operate USB/iPod® devices.

BLUETOOTH® STREAMING AUDIO (if so equipped)

If you have a compatible Bluetooth® audio device that is capable of playing audio files, the device can be connected to the vehicle's audio system so that the audio files on the device play through the vehicle's speakers.

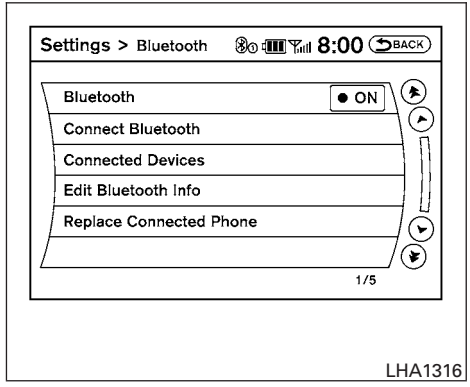

Connecting Bluetooth® audio

To connect your Bluetooth® audio device to the vehicle, follow the procedure below:

1. Press the SETTING button on the control panel.
2. Touch the "Bluetooth" key.
3. Touch the "Connect Bluetooth" key.

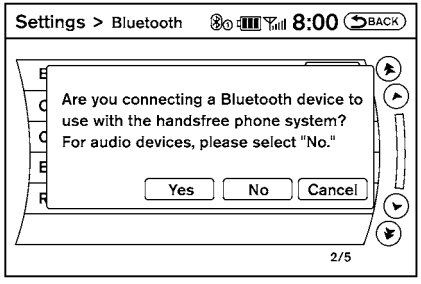

LHA1317

4. A screen will appear asking if you are connecting the device to use with the hands-free phone system. Select the “No” key.

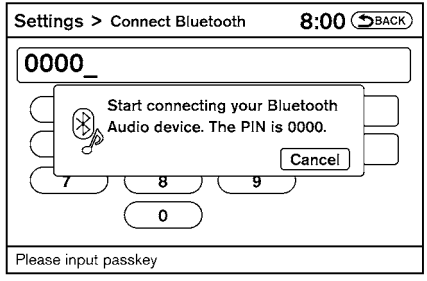

LHA1351

5. Enter a PIN of your choice. It will be needed by your Bluetooth® audio device to complete the connection process. For additional information, refer to the Bluetooth® audio device’s owner’s manual.

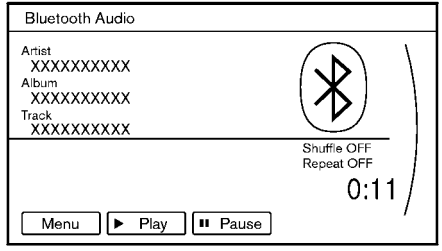

SAA2510

Audio main operation

To switch to the Bluetooth® audio mode, press the DISC•AUX button repeatedly until the Bluetooth® audio mode is displayed on the screen.

The controls for the Bluetooth® audio are displayed on the screen.

DISC·AUX button

Press the DISC·AUX button with the system off and the Bluetooth® audio device connected to turn the system on. If another audio source is playing and the Bluetooth® audio device is connected, press the DISC·AUX button repeatedly until the display changes to the Bluetooth® audio mode.

⏮ ⏭ SEEK▪CAT/TRACK button

Press the SEEK▪CAT/TRACK button ⏭ for less than 1.5 seconds while a Bluetooth® audio file is being played to advance to the beginning of the next track.

Press the SEEK▪CAT/TRACK button ⏭ for more than 1.5 seconds while a Bluetooth® audio file is being played to advance the track. The Bluetooth® audio device will play while fast forwarding. When the button is released, the Bluetooth® audio device will return to normal play speed.

Press the SEEK▪CAT/TRACK button ⏮ for less than 1.5 seconds while a Bluetooth® audio file is being played to return to the beginning of the current track.

Press the SEEK▪CAT/TRACK button ⏮ for more than 1.5 seconds while a Bluetooth® audio file is being played to reverse the track. The Bluetooth® audio device will play while reversing. When the button is released, the Bluetooth® audio device will return to normal play speed.

The INFINITI controller can also be used to select tracks when the Bluetooth® audio play mode screen is shown on the display. ("Bluetooth audio" will be indicated on the header of the screen.)

RDM (random)/RPT (repeat) button

Press the RDM·RPT button repeatedly to change the play mode as follows:

Normal → Shuffle All Tracks → Shuffle Group → Repeat 1 Track → Repeat All Tracks → Repeat Group → Normal

Operation keys

To operate a Bluetooth® audio device, select a key displayed on the operation screen using the INFINITI controller.

▶ Play

Select the " ▶ " key to start playing after it has been paused. Select this key again to pause the audio play.

⏸ Pause

Select the " ⏸ " key to pause the Bluetooth ® audio device. Select this key again to resume playing.

Play Mode

Select the "Menu" key to alter the play mode.

Choose the preferred play mode from the following items:

- Shuffle
  Choose from "Shuffle OFF", "Shuffle All Tracks" and "Shuffle Group"
- Repeat
  Choose from "Repeat OFF", "Repeat 1 Track", "Repeat All Tracks" and "Repeat Group".

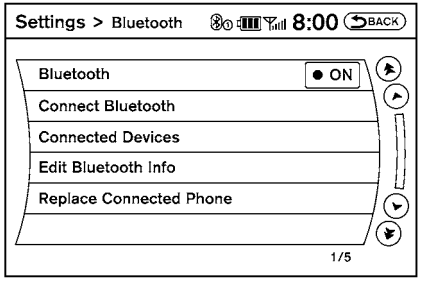

LHA1316

Bluetooth® audio settings

Press the SETTING button and select the "Bluetooth" key to set up the Bluetooth® device system to the preferred settings.

Bluetooth
If this setting is turned off, the connection between the Bluetooth® devices and the in-vehicle Bluetooth® module will be canceled.

Connect Bluetooth
Connects to the Bluetooth® device. For additional information, refer to "Connecting procedure" in this section. Up to five devices can be registered.

Connected Devices
Registered devices are shown on the list. Select a Bluetooth® device from the list, the following options will be available.

- **Select**
  Select "Select" to connect the selected device to the vehicle. If there is a different device currently connected, the selected device will replace the current device.
- **Edit**
  Rename the selected Bluetooth® device using the keypad displayed on the screen.
- **Delete**
  Delete the selected Bluetooth® device.

Edit Bluetooth Info
Change the name broadcasted by this system over Bluetooth®. Change the PIN code that is entered when connecting a hands free device to this system.

Replace Connected Phone
Replace the Bluetooth® connection with a connected Bluetooth® cellular phone. For additional information about Hands-Free Phone System, refer to "Bluetooth® Hands-Free Phone System with navigation system" in this section.

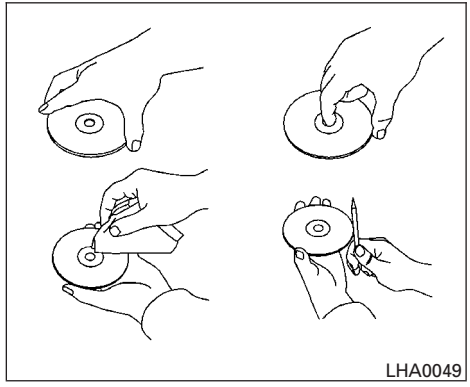
LHA0049

CD CARE AND CLEANING

- Handle a CD by its edges. Do not bend the disc. Never touch the surface of the disc.
- Always place the discs in the storage case when they are not being used.
- To clean a disc, wipe the surface from the center to the outer edge using a clean, soft cloth. Do not wipe the disc using a circular motion.
- Do not use a conventional record cleaner or alcohol intended for industrial use.

- A new disc may be rough on the inner and outer edges. Remove the rough edges by rubbing the inner and outer edges with the side of a pen or pencil as illustrated.

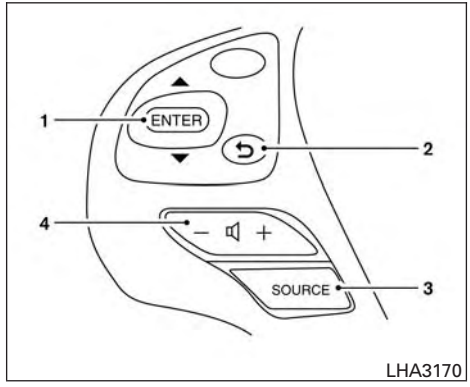

STEERING WHEEL SWITCH FOR AUDIO CONTROL

1. Menu control switch/ENTER button
2. ⮌ (back) switch
3. SOURCE switch
4. Volume control switch

The audio system can be operated using the controls on the steering wheel.

SOURCE switch

With the ignition switch in the ACC or ON position, push the SOURCE switch to turn the audio system on.

Push the SOURCE switch to change the mode in the following sequence:

Models without Navigation System
AM → FM1 → FM2 → XM1 → XM2 → XM3 → USB/iPod®* → CD → AUX* → AM.

Models with Navigation System
AM → FM1 → FM2 → XM1 → XM2 → XM3 → CD/DVD* → USB/iPod®* → Bluetooth® Audio* → AUX* → AM.

* These modes are only available when compatible media storage is inserted into the device.

Volume control switch

Push the volume control switch to increase or decrease the volume.

▼ ▲ Menu control switch/ENTER button

While the display is showing a MAP, STATUS or Audio screen, tilt the Menu Control switch upward or downward to select a station, track, CD or folder. For most audio sources, tilting the switch up/down for more than 1.5 seconds provides a different function than a tilting up/down for less than 1.5 seconds.

AM and FM

- Tilt up/down for less than 1.5 seconds to increase or decrease the preset station.
- Tilt up/down for more than 1.5 seconds to seek up or down to the next station.
- Press the ENTER button to show the list of preset stations.

XM

- Tilt up/down for less than 1.5 seconds to increase or decrease the preset station.
- Tilt up/down for more than 1.5 seconds to go to the next or previous category.
- Press the ENTER button to show the XM Menu.

iPod®

- Tilt up/down for less than 1.5 seconds to increase or decrease the track number.
- Press the ENTER button to show the iPod Menu.

CD

- Tilt up/down for less than 1.5 seconds to increase or decrease the track number.
- Tilt up/down for more than 1.5 seconds to increase or decrease the folder number (if playing compressed audio files).
- Press the ENTER button to show the CD Menu.

DVD (if so equipped)

- Tilt up/down for less than 1.5 seconds to increase or decrease the track number.
- Tilt up/down for more than 1.5 seconds to increase or decrease the title number.
- Press the ENTER button to select an item from the DVD display.
- When the transparent operation menu appears, the switch will control the menu.

USB

- Tilt up/down for less than 1.5 seconds to increase or decrease the track number.
- Tilt up/down for more than 1.5 seconds to increase or decrease the folder number.
- Press the ENTER button to show the USB Menu.

Bluetooth® Audio (if so equipped)

- Tilt up/down for less than 1.5 seconds to increase or decrease the track number.

AUX

- Press the ENTER button to show the AUX Menu.

⮌ (back) switch

Press the ⮌ (back) switch to return to the previous screen or cancel the current selection.

ANTENNA

The vehicle is equipped with a shark fin antenna and an antenna pattern is printed inside the rear window.

CAUTION

- **Do not place metalized film near the rear window glass or attach any metal parts to it. This may cause poor reception or noise.**
- **When cleaning the inside of the rear window, be careful not to scratch or damage the rear window antenna. Lightly wipe along the antenna with a dampened soft cloth.**

INFINITI MOBILE ENTERTAINMENT SYSTEM (MES) (if so equipped)

If your vehicle is equipped with the Dual Head Restraint/Headrest DVD System, you can enjoy playing video files via a DVD, CD or USB memory that provides images and sound both from the front and rear display screens.

You can also enjoy compatible auxiliary devices such as video games, camcorders or portable video players through the auxiliary jacks.

The front and right/left rear displays can show different sources individually. The maximum of three audio sources, such as an iPod®, DVD and auxiliary device, can be enjoyed at the same time.

WARNING

The driver must not attempt to operate the Dual Head Restraint/Headrest DVD System while driving so full attention may be given to vehicle operation.

Park the vehicle in a safe location and apply the parking brake to view the images on the front center display screen using the DVD player.

CAUTION

- **Do not attempt to use the system in extremely high or low temperature condition [below −4°F (−20°C) or above 158°F (70°C)].**
- **To avoid draining the vehicle battery, do not operate the system for more than 15 minutes without starting the engine.**

The front display is designed not to show the images while driving, as the driver's attention must be given to vehicle operation for safety. Sounds are available. To show the images in the front display, stop the vehicle in a safe location, move the shift lever to the P (Park) position and apply the parking brake.

SYSTEM COMPONENTS

Rear displays

CAUTION

- **The glass screen on the liquid crystal display may break if hit with a hard or sharp object. If the glass breaks, do not touch the liquid crystalline material. In case of contact with skin, wash immediately with soap and water.**
- **Use soft, damp cloth when cleaning the Dual Head Restraint/Headrest DVD System components. Do not use solvents or cleaning solutions.**

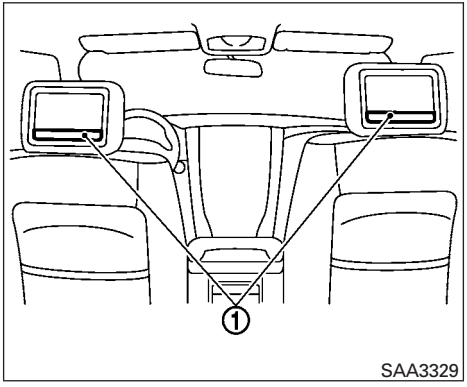

The rear displays are located on the back of the front head restraints/headrests.

Use the remote control to operate the rear display screen.

Press the preferred side (L or R) of the power ON/OFF button on the remote control to activate the rear display.

The rear screens can also be activated using the INFINITI controller. For additional information, refer to “Rear display settings” in this section.

Do not block the range of the wireless remote control receiver and wireless headphones transmitter ①.

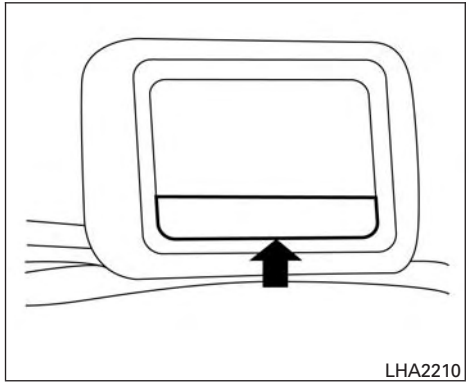

The angle of the rear display screen can be adjusted for optimal viewing.

Gently apply pressure to the base of the screen where indicated until the screen reached the desired position. When the screen is released, it will remain in the current position. To return to the screen to the flat position, press the base of the screen in all the way until it clicks and retracts.

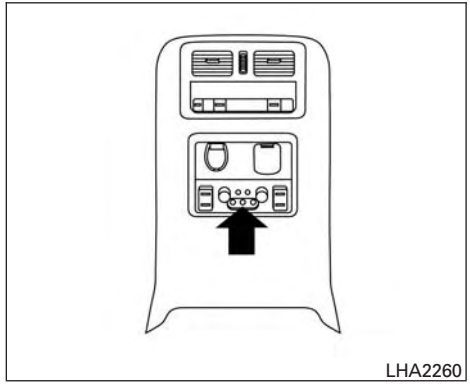

Rear auxiliary input jacks

The rear auxiliary input jacks are located on the inside of the center console. NTSC/PAL compatible devices can be connected to the auxiliary jacks. The images from the connected device can be viewed on the rear displays.

The rear auxiliary jacks are color coded for identification purposes.

- Yellow - video input
- White - left channel audio input
- Red - right channel audio input

Before connecting a device to a jack, turn off the power of the portable device.

To display the rear AUX screen, press the preferred side (L or R) of the AUX (L)/AUX (R) buttons (rear input jacks) on the remote control.

The device connected to the rear auxiliary input jacks cannot be displayed on the front screen.

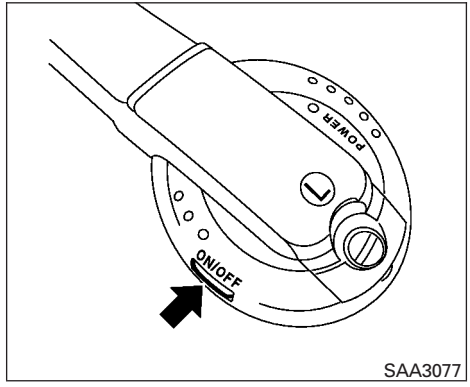

SAA3077

Headphones

The headphones for this system are a wireless type and no cables are necessary. The headphones can only be used in the rear seat.

Power ON/OFF

Press the power ON/OFF button to turn the headphones on or off.

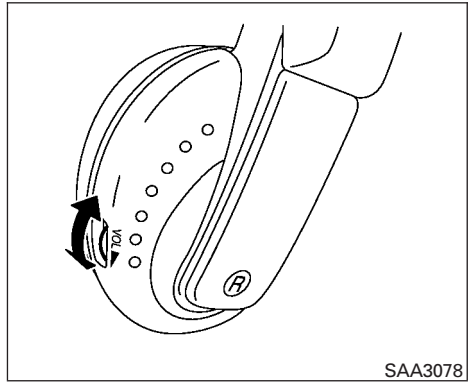

SAA3078

Volume control

Turn the volume control knob to adjust the volume.

The headphones will automatically turn off after about 4 minutes if there is no sound during that period. The headphones will also turn off after approximately 4 hours of continuous use. To prevent the battery from being discharged, keep the power turned off when not in use.

If the sound from the headphones is not clear, it may be due to interference from an infrared communication device or a cellular phone. If this happens, turn down the headphone volume or stop using the headphones.

It is also possible that the headphones may be too far from the transmitter which is in the rear display screen. This is not a malfunction.

The sound may also be interrupted temporarily when there is an obstacle between the headphones and the transmitter. Remove the obstacle, such as opaque materials, hands, hair, etc.

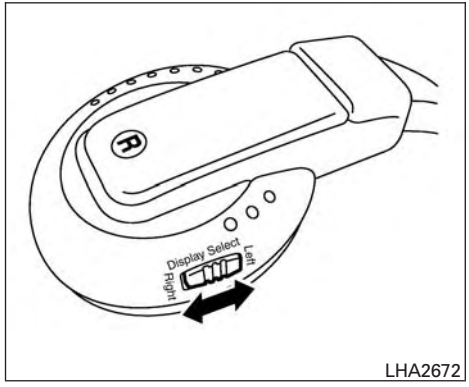

LHA2672

Channel change

When the rear displays are playing different sources, slide the Display Select switch to select the sound. “Left” is the sound on the left display. “Right” is the sound on the right display.

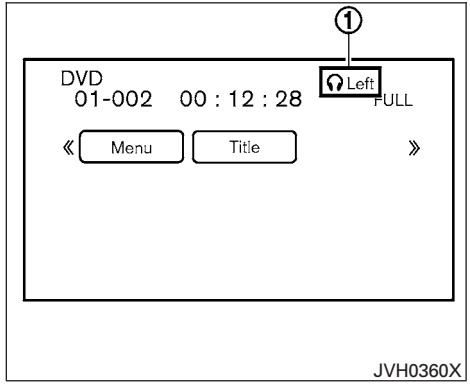

JVH0360X

The selected headphone channel (″Left″ or ″Right″) ① will appear on the menu screen on the rear display.

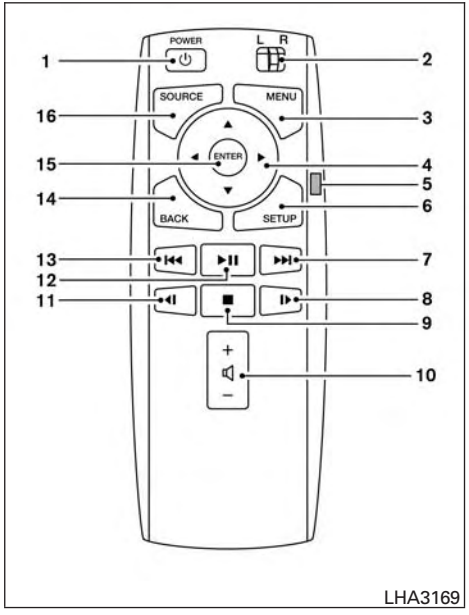

Remote control

The remote control has the following functions:

1. POWER button
2. Display select switch (L or R)
3. MENU button
4. Directional buttons
5. Backlight button
6. SETUP button
7. (next chapter) button
8. (fast forward) button
9. (stop) button
10. Volume control button
11. (reverse) button
12. (play and pause) button
13. (previous chapter) button
14. BACK button
15. ENTER button
16. SOURCE button

Select rear displays audio source

Slide the display select switch on the remote control to the left (L) or right (R) to select each screen source individually.

The SOURCE button on the remote control selects the source for front and rear screens at once.

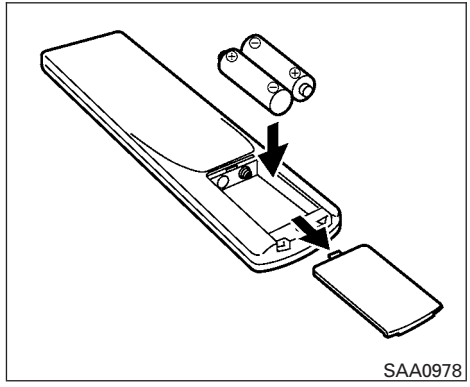

Remote control and headphones battery replacement

CAUTION

- **An improperly disposed battery can harm the environment. Always confirm local regulations for battery disposal.**
- **When changing batteries, do not let dust or oil get on the components.**

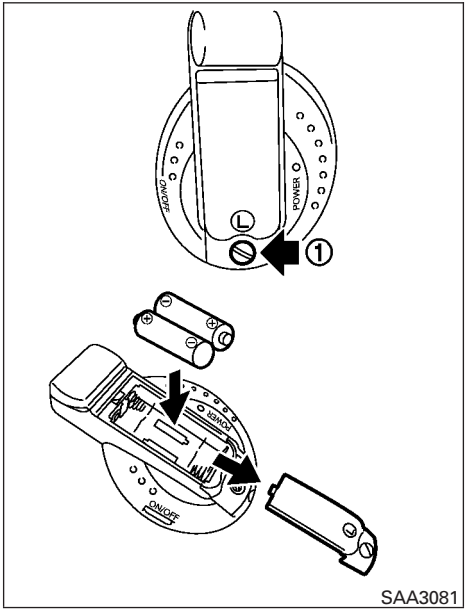

SAA3081

To replace the battery:

1. Open the lid as illustrated.
   - For headphones, remove the screw ① with a flat-bladed screwdriver before removing the lid.
2. Replace both batteries with new ones.
   - Recommended battery:
     Size AA 6 2 (DVD remote control)
     Size AAA 6 2 (headphones)
   - Be careful not to touch the battery terminal.
   - Make sure that the (+) and (-) ends on the batteries match the markings inside the compartment.
3. Close the lid securely.
   - If you will not be using the remote control for long periods of time, remove the batteries.
   - Replacement of the batteries is needed when the remote control only functions at extremely close distances to the Dual Head Restraint/Headrest DVD System or when it does not function at all.

FCC Notice:

Changes or modifications not expressly approved by the party responsible for compliance could void the user's authority to operate the equipment. This device complies with Part 15 of the FCC Rules and RSS-210 of Industry Canada. Operation is subject to the following two conditions: (1) This device may not cause harmful interference, and (2) this device must accept any interference received, including interference that may cause undesired operation of the device.

BEFORE OPERATING DUAL HEAD RESTRAINT/HEADREST DVD SYSTEM

Precautions

Start the engine when using the Dual Head Restraint/Headrest DVD System.

⚠ WARNING

The driver must not attempt to operate the Dual Head Restraint/Headrest DVD System or wear the headphones while the vehicle is in motion so that full attention may be given to vehicle operation.

⚠ CAUTION

- **Only operate the Dual Head Restraint/Headrest DVD System while the vehicle engine is running. Operating the Dual Head Restraint/Headrest DVD System for extended periods of time with the engine OFF can discharge the vehicle battery.**

- **Do not allow the system to get wet. Excessive moisture such as spilled liquids may cause the system to malfunction.**
- **While playing VIDEO-CD media, this DVD player does not guarantee complete functionality of all VIDEO-CD formats.**

Parental level (parental control)

Video data with the parental control setting can be played with this system. Please use your own judgement to set the parental control with the system.

Disc selection

You can play the following disc formats with the DVD player:

- DVD-VIDEO
- VIDEO-CD
- DTS-CD

Use DVDs with the region code "ALL" or the code applicable to your country. The region code is displayed as a small symbol printed on the top of the DVD. This vehicle-installed DVD player can only play DVDs with an applicable region code.

Available audio sources

The following sources are available to play on each display:

Front display

- Radio
- CD/DVD
- USB memory/iPod®
- Bluetooth® audio
- AUX (front)

Rear display

- DVD
- USB memory with video files
- AUX (front/rear)

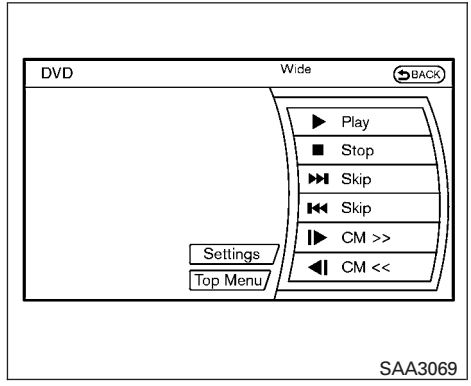

Front display

PLAYING A DVD (Digital Versatile Disc)

DISC·AUX button

Park the vehicle in a safe location for the front seat occupants to operate the DVD player while watching the images.

Insert a DVD into the CD/DVD slot with the labeled side up. The DVD will be guided automatically into the slot. When ejecting the DVD, press the EJECT button.

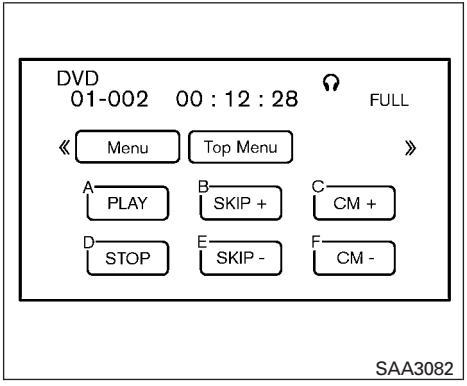

Rear display

Press the DISC·AUX button on the control panel and turn the display to the DVD mode, and begin playing the DVD automatically.

When a DVD is loaded, it will begin playing automatically.

The front screen will be turned on when the DISC·AUX button is pressed while a DVD is being played, and it will turn off automatically after a period of time. To turn it on again, press the DISC·AUX button again.

Adjust front/rear displays

Front display

To adjust the front display mode, press the DISP button on the center multi-function control panel. Follow the instructions displayed on the screen.

Rear display

To adjust the rear display mode, press the preferred side (L or R) of the DISP button on the remote control.

DVD operation keys

To operate the DVD player, select the preferred key displayed on the operation screen using the INFINITI controller.

PAUSE

Select this key and press the ENTER button to pause the DVD. To resume playing the DVD, use the “PLAY” key.

To pause the DVD, it is also possible to press the PAUSE button on the keypad of the remote control.

PLAY

Select this key and press the ENTER button to start playing the DVD, for example, after pausing the DVD.

To start playing the DVD, it is also possible to press the PLAY button on the keypad of the remote control.

STOP

Select this key and press the ENTER button to stop playing the DVD.

To stop playing the DVD, it is also possible to press the STOP button on the keypad of the remote control.

SKIP (FORWARD)

Select this key and press the ENTER button to skip the chapter(s) of the disc forward. The chapters will advance the number of times the ENTER button is pressed.

To skip the chapter(s) forward, it is also possible to press the corresponding button on the keypad of the remote control.

SKIP (REWIND)

Select this key and press the ENTER button to skip the chapter(s) of the disc backward. The chapters will go back the number of times the ENTER button is pressed.

To skip the chapter(s) backward, it is also possible to press the corresponding button on the keypad of the remote control.

Commercial Skip

This function is only for DVD-VIDEO and DVD-VR.

Select this key to skip forward or backwards by the set amount as defined in the DVD settings menu.

To skip forward or backward, it is also possible to press the corresponding button on the keypad of the remote control.

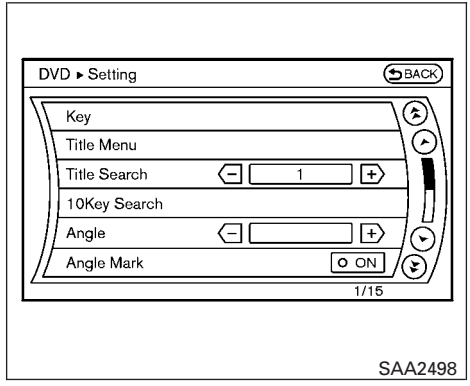

Front screen

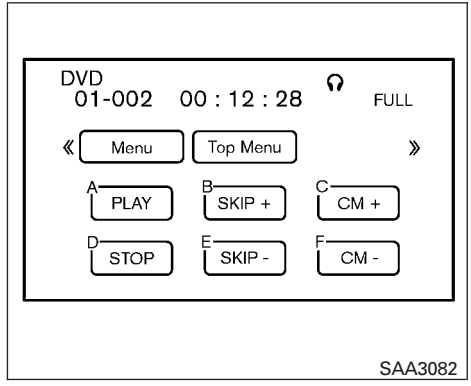

Rear screen

Setting keys

Select the “Settings” key with the INFINITI controller and press the ENTER button to adjust the following settings.

The items indicated with “*” can also be set from the rear display. Press the DVD button on the remote control while a DVD is being played. Select the preferred item using the joystick on the remote control and press the ENTER button.

Key (DVD-VIDEO)

Keys for the DVD menu operation are displayed.

Arrow icons: Move the cursor to select a DVD menu.

Enter: Enter the selected menu.

Move: Change the display location by moving the operation key.

Back: Return to the previous screen.

Hide: Hide the operation key.

Title Menu (front)/Menu (rear) (DVD-VIDEO)

Menus specific to each disc will be shown. For additional information, refer to the instructions attached to the disc.

Title Search (DVD-VIDEO)

A scene that belongs to a specified title will be displayed each time the "+" side or "−" side is selected.

10 Key Search (DVD-VIDEO, VIDEO-CD, CD-DA)

Select the "10 Key Search" key and press the ENTER button to open the number entry screen.

Input the number you want to search for and select the "OK" key with the INFINITI controller. Then press the ENTER button. The specified Title/Chapter or Group/Track will be played.

Angle (DVD-VIDEO)

If the DVD contains different angles (such as moving images), the current image angle can be switched to another one.

Select the "Angle" key and press the ENTER button. When the "+" side or "−" side is selected, the angle will change.

Angle Mark (DVD-VIDEO)

When this item is turned on, an angle mark will be shown on the bottom of the screen if the scene can be seen from a different angle.

Menu Skip (DVD-VIDEO)

DVD menus are automatically configured and the contents will be played directly when the "Menu Skip" key is turned on. Note that some discs may not be played directly even if this item is turned on.

CM Skip (DVD-VIDEO)

The amount of seconds for CM Skip can be set to 15, 30 or 60 seconds.

DRC (DVD-VIDEO)

DRC (Dynamic Range Compression) allows tuning of the dynamic range of sound recorded in the Dolby Digital format.

DVD Language (DVD-VIDEO, VIDEO-CD)

Select the "DVD Language" key and press the ENTER button to open the number entry screen.

Input the number corresponding to the preferred language and select the "OK" key with the INFINITI controller. Then press the ENTER button. The DVD top menu language will be changed to the one selected.

Display

Adjust the image quality of the screen, select the preferred adjustment items and press the ENTER button.

Audio

Choose the preferred language using the INFINITI controller and press the ENTER button.

Subtitle (DVD-VIDEO)

Choose the preferred language using the INFINITI controller and press the ENTER button.

To turn off the subtitles, press and hold the ENTER button until a beep sounds.

Display Mode (DVD-VIDEO, VIDEO-CD)

Choose from the "Full", "Wide", "Normal" or "Cinema" mode using the INFINITI controller and press the ENTER button.

Play Mode

Choose the preferred play mode using the INFINITI controller and press the ENTER button.

Remote control operation

Use the remote control to adjust the following items.

Rear display ON/OFF

The rear displays can be activated or deactivated individually.

To activate or deactivate the rear displays, press the preferred side (L or R) of the ON·OFF button on the remote control.

Joystick

Use the joystick to select the items displayed on the rear screen.

ENTER button

Press the ENTER button to make the selected item complete on the rear screen.

BACK button

Press to go back to the previous screen or cancel the selection.

DVD mode

Press the DVD button to select the DVD mode.

AUX mode

The AUX (auxiliary input jacks) modes can be activated or deactivated individually. To activate the AUX mode, press the preferred side (L or R) of the AUX button. Press the AUX button again to deactivate the AUX mode and display another mode.

Volume

To control the volume level, press the VOL button ^ or v .

Display

Display settings can be set individually for the right and left screens.

Press the preferred side (L or R) of the DISP button to adjust the rear display settings.

Sound

To change the language, press the SOUND button. Each time the button is pressed, the language will change to each language stored in the DVD.

Track/Channel

Press to skip to the previous or next DVD scene selection.

Rear display settings

To adjust the rear display settings, select the preferred key and press the ENTER button. The following settings are available:

Aspect

Select the display size from “CINEMA”, “WIDE”, “FULL” or “NORMAL” using the joystick on the remote control.

Picture Mode

To adjust the display brightness automatically, select the “Brightness” key and then select from “Darker”, “Normal” or “Brighter”. When adjusting manually, select “OFF” and adjust using the joystick on the remote control and tilt the joystick to the right or left.

To adjust tint, color, contrast or black level, select a key using the joystick on the remote control and tilt the joystick to the right or left.

Press the BACK button on the remote control to apply the settings and return to the previous display.

To return the adjustment levels to the default value, select “Execute” next to “Initialization” using the joystick on the remote control and press the ENTER button. The “Execute” key is deactivated when the picture mode settings are already in the default value.

Color System

To choose the color system, select from “NTSC”, “PAL”, “PAL-60”, “PAL-M”, “PAL-N” or “AUTO” using the joystick on the remote control and tilt the joystick to the right or left.

3D Y/C filter

Set to ON/OFF using the joystick on the remote control. When turned on, small characters and an outline of the shapes will be displayed more clearly than when turned off.

AUX Volume Setting

To set the AUX volume, select from “High”, “Low” or “Middle” using the joystick on the remote control and tilt the joystick to the right or left.

OPERATING TIPS

- The images from a device that is connected to the rear auxiliary input jacks cannot be viewed on the front displays.
- It is not possible to switch the source to USB (if so equipped) or DVD using the remote control when the rear display is in the AUX mode. Press the AUX (L)/ AUX (R) button in the remote control and turn off the AUX mode, and then push the preferred mode switch.
- It is not possible to display different video files, such as DVD or video files in the USB memory, on the front and rear displays at the same time.
- It is not possible to play an audio file and a video file in the same USB memory at the same time.

Multiple source display

It is possible to play different sources on each display. The following example shows how to operate multiple sources.

1. Display a video file in the front display by selecting the DVD mode.
2. Press the L side on the power ON·OFF button on the remote control. The left rear display comes on and the DVD screen will be displayed.
3. Press the R side on the power ON·OFF button on the remote control. The right rear display comes on and the DVD screen will be displayed.
4. Switch the source on the front display to an audio source. The sound from the speakers switches according to the front display. The rear display continues to display the DVD.
5. Turn on a pair of headphones and listen to the DVD on the rear displays using the headphones.
6. Connect an auxiliary device into the AUX jacks and press the AUX (L)/AUX (R) button on the remote control. The selected side of the rear display turns to the AUX mode. The other rear display continues to display the DVD.
7. Turn on the other pair of headphones. If the sound from the headphones is not from the AUX jacks, switch the channel with the channel select switch on the headphones.

CARE AND MAINTENANCE

Use a lightly dampened, lint free cloth to clean the surfaces of your Dual Head Restraint/Headrest DVD System (DVD player face, screen, remote control, etc.).

⚠ CAUTION

- **Do not use any solvents or cleaning solutions when cleaning the video system.**
- **Do not use excessive force on the monitor screen.**
- **Avoid touching or scratching the monitor screen as it may become dirty or damaged.**
- **Do not attempt to operate the system in extreme temperature conditions [below −4°F (−20°C) and above 158°F (70°C)]**
- **Do not attempt to operate the system in extreme humidity conditions (less than 10% or more than 75%).**

CAR PHONE OR CB RADIO

When installing a CB, ham radio or car phone in your vehicle, be sure to observe the following precautions; otherwise, the new equipment may adversely affect the engine control system and other electronic parts.

⚠ WARNING

- **A cellular phone should not be used for any purpose while driving so full attention may be given to vehicle operation. Some jurisdictions prohibit the use of cellular phones while driving.**
- **If you must make a call while your vehicle is in motion, the hands free cellular phone operational mode is highly recommended. Exercise extreme caution at all times so full attention may be given to vehicle operation.**
- **If you are unable to devote full attention to vehicle operation while talking on the phone, pull off the road to a safe location and stop your vehicle.**

⚠ CAUTION

- **Keep the antenna as far away as possible from the electronic control modules.**
- **Keep the antenna wire more than 8 in (20 cm) away from the electronic control system harnesses. Do not route the antenna wire next to any harness.**
- **Adjust the antenna standing-wave ratio as recommended by the manufacturer.**
- **Connect the ground wire from the CB radio chassis to the body.**
- **For details, it is recommended that you visit an INFINITI retailer.**

BLUETOOTH® HANDS-FREE PHONE SYSTEM WITHOUT NAVIGATION SYSTEM (if so equipped)

⚠ WARNING

- **Use a phone after stopping your vehicle in a safe location. If you have to use a phone while driving, exercise extreme caution at all times so full attention may be given to vehicle operation.**
- **If you are unable to devote full attention to vehicle operation while talking on the phone, pull off the road to a safe location and stop your vehicle.**

⚠ CAUTION

To avoid discharging the vehicle battery, use a phone after starting the engine.

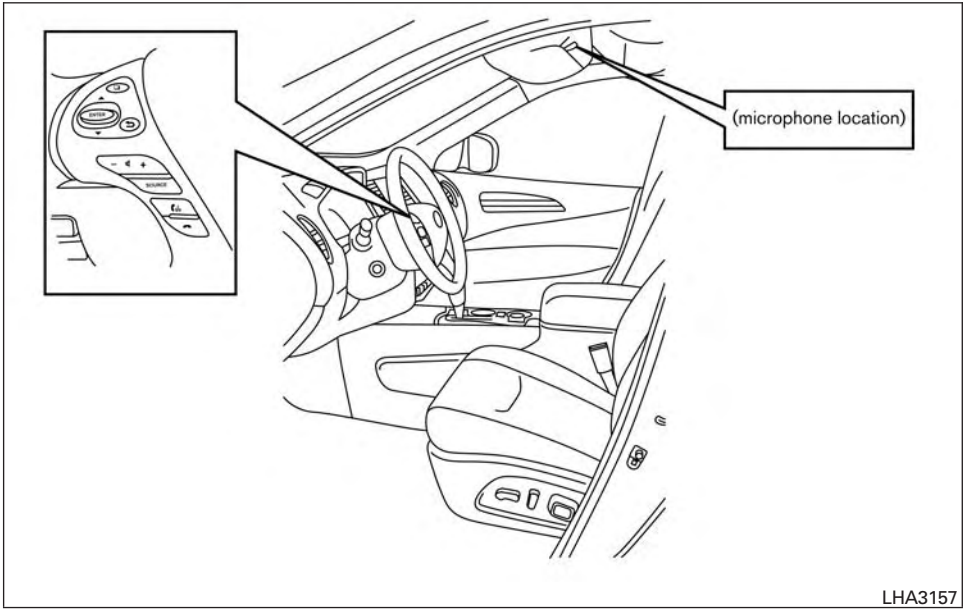

Your INFINITI is equipped with the Bluetooth® Hands-Free Phone System. If you have a compatible Bluetooth® enabled cellular phone, you can set up the wireless connection between your cellular phone and the in-vehicle phone module. With Bluetooth® wireless technology, you can make or receive a hands-free telephone call with your cellular phone in the vehicle.

Once your cellular phone is connected to the in-vehicle phone module, no other phone connecting procedure is required. Your phone is automatically connected with the in-vehicle phone module when the ignition switch is placed in the ON position with the previously connected cellular phone turned on and carried in the vehicle.

You can connect up to five different Bluetooth® cellular phones to the in-vehicle phone module. However, you can talk on only one cellular phone at a time.

Before using the Bluetooth® Hands-Free Phone System, refer to the following notes.

- Set up the wireless connection between a compatible cellular phone and the in-vehicle phone module before using the hands-free phone system.
- Some Bluetooth® enabled cellular phones may not be recognized by the in-vehicle phone module. Visit www.infinitiusa.com/bluetooth or www.infiniti.ca/bluetooth for a recommended phone list and connecting instructions.
- You will not be able to use a hands-free phone under the following conditions:
  - Your vehicle is outside of the cellular service area.
  - Your vehicle is in an area where it is difficult to receive a cellular signal; such as in a tunnel, in an underground parking garage, near a tall building or in a mountainous area.

– Your cellular phone is locked to prevent it from being dialed.

- When the radio wave condition is not ideal or ambient sound is too loud, it may be difficult to hear the other person's voice during a call.
- Do not place the cellular phone in an area surrounded by metal or far away from the in-vehicle phone module to prevent tone quality degradation and wireless connection disruption.
- While a cellular phone is connected through the Bluetooth® wireless connection, the battery power of the cellular phone may discharge quicker than usual. The Bluetooth® Hands-Free Phone System cannot charge cellular phones.
- Some cellular phones or other devices may cause interference or a buzzing noise to come from the audio system speakers. Storing the device in a different location may reduce or eliminate the noise.
- Refer to the cellular phone Owner's Manual regarding the telephone charges, cellular phone antenna and body, etc.
- For additional information, refer to "Troubleshooting guide" in this section. You can also visit www.infinitiusa.com/bluetooth or www.infiniti.ca/bluetooth for troubleshooting help.

REGULATORY INFORMATION

FCC Regulatory information

– CAUTION: To maintain compliance with FCC's RF exposure guidelines, use only the supplied antenna. Unauthorized antenna, modification, or attachments could damage the transmitter and may violate FCC regulations.

– Operation is subject to the following two conditions:

1. This device may not cause interference and
2. this device must accept any interference, including interference that may cause undesired operation of the device.

IC Regulatory information

– Operation is subject to the following two conditions: (1) this device may not cause interference, and (2) this device must accept any interference, including interference that may cause undesired operation of the device.

– This Class B digital apparatus meets all requirements of the Canadian Interference-Causing Equipment Regulations.

Bluetooth®

BLUETOOTH® is a trademark owned by Bluetooth SIG, Inc. and licensed to Visteon.

USING THE SYSTEM

The INFINITI Voice Recognition system allows hands-free operation of the Bluetooth® Phone System.

If the vehicle is in motion, some commands may not be available so full attention may be given to vehicle operation.

Initialization

When the ignition switch is placed in the ON position, INFINITI Voice Recognition is initialized, which takes a few seconds. If the button is pressed before the initialization completes, the system will announce "Hands-free phone system not ready" and will not react to voice commands.

Operating tips

To get the best performance out of the INFINITI Voice Recognition system, observe the following:

- Keep the interior of the vehicle as quiet as possible. Close the windows to eliminate surrounding noises (traffic noises, vibration sounds, etc.), which may prevent the system from recognizing voice commands correctly.
- Wait until the tone sounds before speaking a command. Otherwise, the command will not be received properly.
- Start speaking a command within 5 seconds after the tone sounds.
- Speak in a natural voice without pausing between words.

Giving voice commands

To operate INFINITI Voice Recognition, press and release the button located on the steering wheel. After the tone sounds, speak a command. The command given is picked up by the microphone, and voice feedback is given when the command is accepted.

- If you need to hear the available commands for the current menu again, say “Help” and the system will repeat them.
- If a command is not recognized, the system announces, “Command not recognized. Please try again.” Make sure the command is said exactly as prompted by the system and repeat the command in a clear voice.
- If you want to go back to the previous command, you can say “Go back” or “Correction” any time the system is waiting for a response.
- You can cancel a command when the system is waiting for a response by saying, “Cancel” or “Quit.” The system announces “Cancel” and ends the Voice Recognition session. You can also press and hold the button on the steering wheel for 5 seconds at any time to end the Voice Recognition session. Whenever the Voice Recognition session is cancelled, a double beep is played to indicate you have exited the system.
- If you want to adjust the volume of the voice feedback, press the volume control switches (+ or -) on the steering wheel while being provided with feedback. You can also use the radio volume control knob.
- In most cases you can interrupt the voice feedback to speak the next command by pressing the button on the steering wheel.
- To use the system faster, you may speak the second level commands with the main menu command on the main menu. For example, press the button and after the tone say, “Call Redial.”

How to say numbers

INFINITI Voice Recognition requires a certain way to speak numbers in voice commands. Refer to the following rules and examples.

- Either “zero” or “oh” can be used for “0”.

  Example: 1-800-662-6200

  – “One eight oh oh six six two six two oh oh”, or

  – “One eight zero zero six six two six two oh oh”

- Words can be used for the first four digits places only.

  Example: 1-800-662-6200

  – “One eight hundred six six two six two oh oh”,

  – NOT “One eight hundred six six two sixty two hundred,” and

  – NOT “One eight oh oh six six two sixty two hundred”

- Numbers can be spoken in small groups. The system will prompt you to continue entering digits, if desired.

  Example: 1-800-662-6200

  – “One eight zero zero”

  The system repeats the numbers and prompts you to enter more.

  – “six six two”

  The system repeats the numbers and prompts you to enter more.

  – “six two zero zero”

- Say “pound” for “#”. Say “star” for “*” (available when using the “Special Number” command and the “Send” command during a call).

  For additional information, refer to “List of voice commands” and “Special number” in this section.

  Example: 1-555-1212 *123

  – “One five five five one two one two star one two three”

- Say “plus” for “+” (available only when using the “Special Number” command).

- Say “pause” for a 2-second pause (available only when storing a phone book number).

NOTE:

For best results, say phone numbers as single digits.

The voice command “Help” is available at any time. Please use the “Help” command to get information on how to use the system.

Voice Prompt Interrupt

In most cases you can interrupt the voice feedback to speak the next command by pressing the button on the steering wheel. After interrupting the system, wait for a beep before speaking your command.

One Shot Call

To use the system faster, you may speak the second level commands with the main menu command on the main menu. For example, press the button and after the tone say, “Call Redial”.

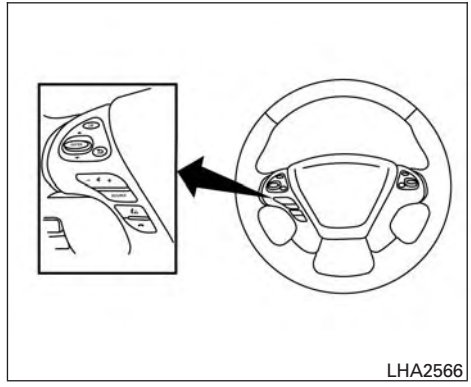

CONTROL BUTTONS

The control buttons for the Bluetooth® Hands-Free Phone System are located on the steering wheel.

PHONE/SEND

Press the button to initiate a Voice Recognition session or answer an incoming call.

You can also use the button to interrupt the system feedback and give a command at once. For additional information, refer to “List of voice commands” and “During a call” in this section.

PHONE/END

While the voice recognition system is active, press and hold the button for 5 seconds to quit the voice recognition system at any time.

TUNING SWITCH

While using the voice recognition system, tilt the tuning switch up or down to manually control the phone system.

GETTING STARTED

The following procedures will help you get started using the Bluetooth® Hands-Free Phone System with INFINITI Voice Recognition. For additional command options, refer to “List of voice commands” in this section.

Choosing a language

You can interact with the Bluetooth® Hands-Free Phone System using English, Spanish or French.

To change the language, perform the following.

1. Press the SETTING button on the control panel
2. Select the “Language & Units” key
3. Select desired language and press enter on the control panel

Connecting procedure

NOTE:

The connecting procedure must be performed when the vehicle is stationary. If the vehicle starts moving during the procedure, the procedure will be cancelled.

Main Menu
“Connect phone” Ⓐ
“Add phone” Ⓑ
Initiate from handset Ⓒ
Name phone Ⓓ

1. Press the button on the steering wheel. The system announces the available commands.
2. Say: “Connect phone” Ⓐ. The system acknowledges the command and announces the next set of available commands.
3. Say: “Add phone” Ⓑ. The system acknowledges the command and asks you to initiate connecting from the phone handset Ⓒ.

   The connecting procedure of the cellular phone varies according to each cellular phone model. For additional information, refer to the cellular phone Owner’s Manual. You can also visit www.infinitiusa.com/bluetooth or www.infiniti.ca/bluetooth for instructions on connecting INFINITI recommended cellular phones.

   When prompted for a Passkey code, enter “1234” from the handset. The Passkey code “1234” has been assigned by INFINITI and cannot be changed.
4. The system asks you to say a name for the phone Ⓓ.

   If the name is too long or too short, the system tells you, then prompts you for a name again.

Also, if more than one phone is connected and the name sounds too much like a name already used, the system tells you, then prompts you for a name again.

Making a call by entering a phone number

Main Menu
"Call" Ⓐ
"Phone Number" Ⓑ
Speak the digits Ⓒ
"Dial" Ⓓ

1. Press the button on the steering wheel. A tone will sound.
2. Say: "Call" Ⓐ. The system acknowledges the command and announces the next set of available commands.
3. Say "Phone Number" Ⓑ. The system acknowledges the command and announces the next set of available commands.
4. Say the number you wish to call starting with the area code in single digit format Ⓒ. If the system has trouble recognizing the correct phone number, try entering the number in the following groups: 3-digit area code, 3-digit prefix and the last 4-digits. For example, 555-121-3354 can be said as "five five five" as the 1st group, then "one two one" as the 2nd group, and "three three five four" as the 3rd group. For dialing more than ten digits or any special characters, say "Special Number". For additional information, refer to "How to say numbers" in this section.
5. When you have finished speaking the phone number, the system repeats it back and announces the available commands.
6. Say: "Dial" Ⓓ. The system acknowledges the command and makes the call.

For additional information, refer to "List of voice commands" in this section.

Receiving a call

When you hear the ring tone, press the button on the steering wheel.

Once the call has ended, press the button on the steering wheel.

NOTE:

If you do not wish to take the call when you hear the ring tone, press the button on the steering wheel.

For additional command options, refer to "List of voice commands" in this section.

LIST OF VOICE COMMANDS

Main Menu
"Call"
"Phonebook"
"Recent Calls"
"Connect Phone"

When you press and release the button on the steering wheel, you can choose from the commands on the Main Menu. The following pages describe these commands and the commands in each sub-menu.

Remember to wait for the tone before speaking.

After the main menu, you can say "Help" to hear the list of commands currently available any time the system is waiting for a response.

If you want to end an action without completing it, you can say "Cancel" or "Quit" at any time the system is waiting for a response. The system will end the Voice Recognition session. Whenever the Voice Recognition session is cancelled, a double beep is played to indicate you have exited the system.

If you want to go back to the previous command, you can say "Go back" or "Correction" any time the system is waiting for a response.

“Call”

```
Main Menu
    “Call”
        (Speak name) Ⓐ
        “Phone Number”
            (Speak Digits) Ⓑ
            “Special Number” Ⓒ
        “Redial” Ⓓ
        “Call Back” Ⓔ
```

(Speak name) Ⓐ

If you have stored entries in the phonebook, you can dial a number associated with a name.

For additional information, refer to “Phonebook” in this section.

When prompted by the system, say the name of the phone book entry you wish to call. The system acknowledges the name.

If there are multiple numbers associated with the name, the system asks you to choose the correct number.

Once you have confirmed the name and location, the system begins the call.

(Speak Digits) Ⓑ

When prompted by the system, say the number you wish to call. For additional information, refer to “How to say numbers” and “Making a call by entering a phone number” in this section.

“Special Number” Ⓒ

For dialing more than 10 digits or any special characters, say “Special Number”. When the system acknowledges the command, the system will prompt you to speak the number.

“Redial” Ⓓ

Use the Redial command to call the last number that was dialed.

The system acknowledges the command, repeats the number and begins dialing.

If a redial number does not exist, the system announces, “There is no number to redial” and ends the INFINITI Voice Recognition System session.

“Call Back” Ⓔ

Use the Call Back command to dial the number of the last incoming call within the vehicle.

The system acknowledges the command, repeats the number and begins dialing.

If a call back number does not exist, the system announces, “There is no number to call back” and ends the INFINITI Voice Recognition System session.

During a call

During a call there are several command options available. Press the button on the steering wheel to mute the receiving voice and enter commands.

- “Help” — The system announces the available commands.
- “Cancel/Quit” — The system announces “Cancel,” ends the Voice Recognition session and returns to the call.
- “Send” — Use the Send command to enter numbers, “*” or “#” during a call. For example, if you were directed to dial an extension by an automated system:

  Say: “Send one two three four.”

  The system acknowledges the command and sends the tones associated with the numbers. The system then ends the Voice Recognition session and returns to the call. Say “star” for “*”, Say “pound” for “#”.

- “Transfer call” — Use the Transfer Call command to transfer the call from the Bluetooth® Hands-Free Phone System to the cellular phone when privacy is desired.

  The system announces, “Transfer call. Call transferred to privacy mode.” The system then ends the Voice Recognition session.

  To reconnect the call from the cellular phone to the Bluetooth® Hands-Free System, press the button.

- “Mute” — Use the Mute command to mute your voice so the other party cannot hear it. Use the mute command again to unmute your voice.

NOTE:

If a call is ended or the cellular phone network connection is lost while the Mute feature is on, the Mute feature will be reset to “off” for the next call so the other party can hear your voice.

“Phonebook” (phones without automatic phonebook download function)

NOTE:

The “Transfer Entry” command is not available when the vehicle is moving.

Main Menu
- “Phonebook”
  - “Transfer Entry” Ⓐ
  - “Delete Entry” Ⓑ
  - “List Names” Ⓒ

For phones that do not support automatic download of the phonebook (PBAP Bluetooth® profile), the “Phonebook” command is used to manually add entries to the vehicle phonebook.

The phonebook stores up to 40 names for each phone connected to the system.

NOTE:

Each phone has its own separate phonebook. You cannot access Phone A’s phonebook if you are currently connected with Phone B.

“Transfer Entry” Ⓐ

Use the Transfer Entry command to store a new name in the system.

When prompted by the system, say the name you would like to give the new entry.

For example, say: “Mary.”

If the name is too long or too short, the system tells you, then prompts you for a name again.

Also, if the name sounds too much like a name already stored, the system tells you, then prompts you for a name again.

The system will ask you to transfer a phone number stored in the cellular phone’s memory.

Enter a phone number by voice command:

For example, say: “five five five one two one two.” For additional information, refer to “How to say numbers” in this section.

To transfer a phone number stored in the cellular phone’s memory:

For additional information, refer to “Transfer entry” in this section. The system acknowledges the command and asks you to initiate the transfer from the phone handset. The new contact phone number will be transferred from the cellular phone via the Bluetooth® communication link.

The transfer procedure varies according to each cellular phone. For additional information, refer to the cellular phone Owner's Manual. You can also visit www.infinitiusa.com/bluetooth or www.infiniti.ca/bluetooth for instructions on transferring phone numbers from INFINITI recommended cellular phones.

The system repeats the number and prompts you for the next command. When you have finished entering numbers or transferring an entry, choose "Store."

The system confirms the name, location and number.

"Delete Entry" Ⓑ

Use the Delete Entry command to erase one entry from the phonebook. After the system recognizes the command, speak the name to delete or say "List Names" to choose an entry.

"List Names" Ⓒ

Use the List Names command to hear all the names in the phonebook.

The system recites the phonebook entries but does not include the actual phone numbers. When the playback of the list is complete, the system goes back to the main menu.

You can stop the playback of the list at any time by pressing the button on the steering wheel. The system ends the INFINITI Voice Recognition System session.

"Phonebook" (phones with automatic phonebook download function)

NOTE:

The "Transfer Entry" command is not available when the vehicle is moving.

Main Menu
"Phonebook"
Say a Name
"List Names" Ⓐ
"Record Name" Ⓑ

For phones that support automatic download of the phonebook (PBAP Bluetooth® profile), the "Phonebook" command is used to manage entries in the vehicle phonebook. You can say the name of an entry at this menu to initiate dialing of that entry.

The phonebook stores up to 1,000 names for each phone connected to the system.

When a phone is connected to the system, the phonebook is automatically downloaded to the vehicle. This feature allows you to access your phonebook from the Bluetooth® system and call contacts by name. You can record a custom voice tag for contact names that the system has difficulty recognizing. For additional information, refer to "Record name" in this section.

NOTE:

Each phone has its own separate phonebook. You cannot access Phone A's phonebook if you are currently connected with Phone B.

"List Names" Ⓐ

Use the List Names command to hear all the names and locations in the phone book.

The system recites the phone book entries but does not include the actual phone numbers. When the playback of the list is complete, the system goes back to the main menu.

You can stop the playback of the list at any time by pressing the button on the steering wheel. The system ends the INFINITI Voice Recognition System session. For additional information, refer to the "Record name" in this section.

"Record Name" Ⓑ

The system allows you to record custom voice tags for contact names in the phonebook that the vehicle has difficulty recognizing. This feature can also be used to record voice tags to directly dial an entry with multiple numbers. Up to 40 voice tags can be recorded to the system.

“Recent Calls”

Main Menu
- “Recent Calls”
  - “Outgoing” Ⓐ
  - “Incoming” Ⓑ
  - “Missed” Ⓒ
  - “Call Back” Ⓓ
  - “Redial” Ⓔ

Use the Recent Calls command to access outgoing, incoming, missed calls and to call back the last incoming call or to redial the last outgoing call.

“Outgoing” Ⓐ

Use the Outgoing command to list the outgoing calls made from the vehicle.

“Incoming” Ⓑ

Use the Incoming command to list the incoming calls made to the vehicle.

“Missed” Ⓒ

Use the Missed command to list the calls made to the vehicle that were not answered.

“Call Back” Ⓓ

Use the Call Back command to dial the number of the last incoming call to the vehicle.

“Redial” Ⓔ

Use the Redial command to dial the number of the last outgoing call from the vehicle.

“Connect Phone”

NOTE:

The Add Phone command is not available when the vehicle is moving.

Main Menu
- “Connect Phone”
  - “Add Phone” Ⓐ
  - “Select Phone” Ⓑ
  - “Replace Phone” Ⓒ
  - “Delete Phone” Ⓓ
  - “Turn Bluetooth OFF” Ⓔ

Use the Connect Phone commands to manage the phones connecting to the vehicle or to enable the Bluetooth® function on the vehicle.

“Add Phone” Ⓐ

Use the Add Phone command to add a phone to the vehicle. For additional information, refer to “Connecting procedure” in this section.

“Select Phone” Ⓑ

Use the Select Phone command to select from a list of phones connected to the vehicle. The system will list the names assigned to each phone and then prompt you for the phone you wish to select. Only one phone can be active at a time.

“Replace Phone” Ⓒ

Use the Replace Phone command to replace an existing phone pairing with a new phone. The system will keep all voice tags assigned to your phonebook.

“Delete Phone” Ⓓ

Use the Delete Phone command to delete a phone that is connected to the vehicle. The system will list the names assigned to each phone and then prompt you for the phone you wish to delete. Deleting a phone from the vehicle will also delete that phonebook for that phone.

“Turn Bluetooth OFF” Ⓔ

Use the Turn Bluetooth OFF command to prevent a wireless connection to your phone.

VOICE ADAPTATION (VA) MODE

Voice Adaptation (VA) allows up to two out-of-dialect users to train the system to improve recognition accuracy. By repeating a number of commands, the users can create a voice model of their own voice that is stored in the system. The system is capable of storing a different VA model for each connected phone.

Training procedure

The procedure for training a voice is as follows.

1. Position the vehicle in a reasonably quiet outdoor location.
2. Sit in the driver's seat with the engine running, the parking brake on, and the transmission in P (Park).
3. Press and hold the button for approximately 5 seconds.
4. The system announces: "Press the PHONE/SEND ( ) button for the hands-free phone system to enter the voice adaptation mode or press the PHONE/END ( ) button to select a different language."
5. Press the button.

   For information on selecting a different language, refer to "Choosing a language" in this section.
6. Voice memory A or memory B is selected automatically. If both memory locations are already in use, the system will prompt you to overwrite one. Follow the instructions provided by the system.
7. When preparation is complete and you are ready to begin, press the button.
8. The VA mode will be explained. Follow the instructions provided by the system.
9. When training is finished, the system will tell you an adequate number of phrases have been recorded.
10. The system will announce that voice adaptation has been completed and the system is ready.

The VA mode will stop if:

- The button is pressed for approximately 5 seconds in VA mode.
- The vehicle begins moving during VA mode.
- The ignition switch is placed in the OFF or LOCK position.

Training phrases

During the VA mode, the system instructs the trainer to say the following phrases. The system will prompt you for each phrase.

- phonebook transfer entry
- dial three oh four two nine
- delete call back number
- incoming
- transfer entry
- eight pause nine three two pause seven
- delete all entries
- call seven two four zero nine
- phonebook delete entry
- next entry
- dial star two one seven oh
- yes
- no
- select
- missed
- dial eight five six nine two
- Bluetooth on

- outgoing
- call three one nine oh two
- nine seven pause pause three oh eight
- cancel
- call back number
- call star two zero nine five
- delete phone
- dial eight three zero five one
- record name
- four three pause two nine pause zero
- delete redial number
- phonebook list names
- call eight oh five four one
- correction
- connect phone
- dial seven four oh one eight
- previous entry
- delete
- dial nine seven two six six
- call seven six three oh one
- go back
- call five six two eight zero
- dial six six four three seven

MANUAL CONTROL

While using the voice recognition system, it is possible to select menu options by using the steering wheel controls instead of speaking voice commands. This can be especially helpful if the noise of driving makes it difficult for the voice recognition system to accurately interpret commands. The manual control mode does not allow dialing a phone number by digits. The user may select an entry from the Phonebook or Recent Calls lists. To re-activate voice recognition, exit the manual control mode by pressing and holding the PHONE/END ( ) button. At that time, pressing the PHONE/SEND ( ) button will start the Hands Free Phone System.

Operating tips

- To enter manual control mode, start the voice recognition system and tilt the tuning ( ) switch up or down. The system will speak "Showing Manual Options" when manual controls are initially activated.
- To browse the menu options, tilt the tuning ( ) switch up or down. The system will always speak the current menu option. Depending on the audio display, it will also show the current menu option.
- To select the current menu option, press the PHONE/SEND ( ) button.
- To go back to the previous menu, press the PHONE/END ( ) button. If the current menu is the Main Menu, pressing the PHONE/END ( ) button will exit the Phone system.
- To exit the manual control mode, press and hold the PHONE/END ( ) button for 5 seconds.

TROUBLESHOOTING GUIDE

The system should respond correctly to all voice commands without difficulty. If problems are encountered, try the following solutions.

Where the solutions are listed by number, try each solution in turn, starting with number 1, until the problem is resolved.

Symptom	Solution
System fails to interpret the command correctly.	1. Ensure that the command is valid. For additional information, refer to “List of voice commands” in this section.
	2. Ensure that the command is spoken after the tone.
	3. Speak clearly without pausing between words and at a level appropriate to the ambient noise level in the vehicle.
	4. Ensure that the ambient noise level is not excessive (for example, windows open or defroster on). NOTE: If it is too noisy to use the phone, it is likely that the voice commands will not be recognized.
	5. If more than one command was said at a time, try saying the commands separately.
	6. If the system consistently fails to recognize commands, the voice training procedure should be carried out to improve the recognition response for the speaker. For additional information, refer to “Voice Adaptation (VA) mode” in this section.
The system consistently selects the wrong entry from the phone book.	1. Ensure that the phone book entry name requested matches what was originally stored. This can be confirmed by using the “List Names” command. For additional information, refer to “Phonebook” in this section.
	2. Replace one of the names being confused with a new name.

BLUETOOTH® HANDS-FREE PHONE SYSTEM WITH NAVIGATION SYSTEM (if so equipped)

⚠ WARNING

- **Use a phone after stopping your vehicle in a safe location. If you have to use a phone while driving, exercise extreme caution at all times so full attention may be given to vehicle operation.**
- **If you are unable to devote full attention to vehicle operation while talking on the phone, pull off the road to a safe location and stop your vehicle.**

⚠ CAUTION

To avoid discharging the vehicle battery, use a phone after starting the engine.

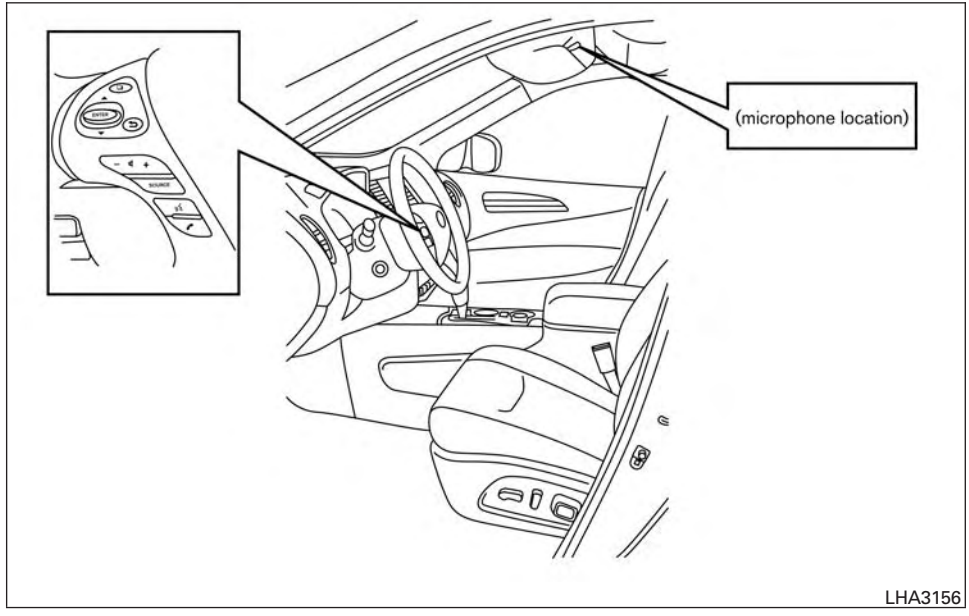

LHA3156

Your INFINITI is equipped with the Bluetooth® Hands-Free Phone System. If you have a compatible Bluetooth® enabled cellular phone, you can set up the wireless connection between your cellular phone and the in-vehicle phone module. With Bluetooth® wireless technology, you can make or receive a hands-free telephone call with your cellular phone in the vehicle.

Once your cellular phone is connected to the in-vehicle phone module, no other phone connecting procedure is required. Your phone is automatically connected with the in-vehicle

phone module when the ignition switch is placed in the ON position with the connected cellular phone turned on and carried in the vehicle.

You can register up to five different Bluetooth® cellular phones to the in-vehicle phone module. However, you can talk on only one cellular phone at a time.

INFINITI Voice Recognition system supports the phone commands, so dialing a phone number using your voice is possible. For additional information, refer to “INFINITI Voice Recognition System” in this section.

Before using the Bluetooth® Hands-Free Phone System, refer to the following notes.

- Set up the wireless connection between a cellular phone and the in-vehicle phone module before using the hands-free phone system.
- Some Bluetooth® enabled cellular phones may not be recognized by the in-vehicle phone module. Please visit www.infinitiusa.com/bluetooth or www.infiniti.ca/bluetooth for a recommended phone list and connecting.
- You will not be able to use a hands-free phone under the following conditions:
  - Your vehicle is outside of the cellular service area.
  - Your vehicle is in an area where it is difficult to receive cellular signal; such as in a tunnel, in an underground parking garage, near a tall building or in a mountainous area.
  - Your cellular phone is locked to prevent it from being dialed.
- When the radio wave condition is not ideal or ambient sound is too loud, it may be difficult to hear the other person’s voice during a call.
- Immediately after the ignition switch is placed in the ON position, it may be impossible to receive a call for a short period of time.
- Do not place the cellular phone in an area surrounded by metal or far away from the in-vehicle phone module to prevent tone quality degradation and wireless connection disruption.
- While a cellular phone is connected through the Bluetooth® wireless connection, the battery power of the cellular phone may discharge quicker than usual. The Bluetooth® Hands-Free Phone System cannot charge cellular phones.
- Some cellular phones or other devices may cause interference or a buzzing noise to come from the audio system speakers. Storing the device in a different location may reduce or eliminate the noise.
- Refer to the cellular phone owner’s manual regarding the telephone charges, cellular phone antenna and body, etc.
- The signal strength display on the monitor will not coincide with the signal strength display of some cellular phones.
- If reception between callers is unclear, adjusting the incoming or outgoing call volume may improve the clarity. For additional information, refer to “Call volume” in this section.
- For additional information, refer to www.infinitiusa.com/bluetooth www.infiniti.ca/bluetooth for troubleshooting help.

REGULATORY INFORMATION

FCC Regulatory information

– CAUTION: To maintain compliance with FCC’s RF exposure guidelines, use only the supplied antenna. Unauthorized antenna, modification, or attachments could damage the transmitter and may violate FCC regulations.

– Operation is subject to the following two conditions:

1. This device may not cause interference and
2. this device must accept any interference, including interference that may cause undesired operation of the device.

IC Regulatory information

– Operation is subject to the following two conditions: (1) this device may not cause interference, and (2) this device must accept any interference, including interference that may cause undesired operation of the device.

– This Class B digital apparatus meets all requirements of the Canadian Interference-Causing Equipment Regulations.

BLUETOOTH® is a trademark owned by Bluetooth SIG, Inc. and licensed to Clarion.

VOICE COMMANDS

You can use voice commands to operate various Bluetooth® Hands-Free Phone System features using the INFINITI Voice Recognition system. For additional information, refer to “INFINITI Voice Recognition System” in this section.

Voice Prompt Interrupt

In most cases you can interrupt the voice feedback to speak the next command by pressing the button on the steering wheel. After interrupting the system, wait for a beep before speaking your command.

One Shot Call

To use the system faster, you may speak the second level commands with the main menu command on the main menu. For example, press the button and after the tone say, “Call Redial”.

NOTE:

For US models, voice recognition system must be in Alternate Command Mode in order for One Shot Calling to operate. For additional information, refer to “INFINITI Voice Recognition Alternate Command Mode” in this section.

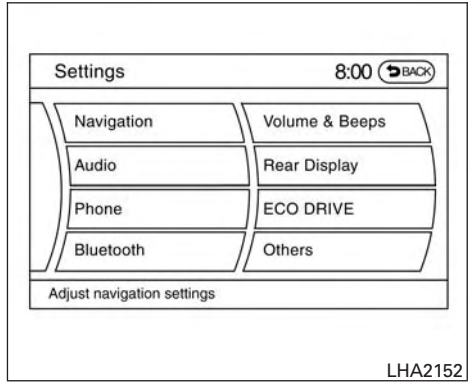

LHA2152

CONNECTING PROCEDURE

Press the SETTING button on the control panel, then touch the “Bluetooth” key on the display.

Menu Item			Result
Bluetooth			Allows user to switch Bluetooth® on and off. Bluetooth® must be on in order to connect device.
	On		Turns Bluetooth® on.
	Off		Turns Bluetooth® off.
Connect Bluetooth			Upon pressing this button, a popup box will appear on the screen, prompting you to confirm that the connection is for the phone system. Touch the ″Yes″ key.
	Yes		Confirms that you are connecting a Bluetooth® device. Upon pressing this button, the following message will appear on screen. ″The system is searching for your phone. Using your handset, look for a Bluetooth® device called MY-CAR. When requested by the handset, enter the PIN 1234. Exiting screen cancels search.″ The connecting procedure phone varies by phone. For additional information, refer to phone Owner’s Manual. When the connecting is complete, the screen will return to the Bluetooth® settings screen.
		Cancel	Cancels operation.
	No		Indicates to the system that you are connecting a Bluetooth® enabled audio device.
	Cancel		Cancels operation.

VEHICLE PHONEBOOK

This vehicle has two phonebooks available for your use. Depending on your phone, the system may automatically download your entire cell phone's phonebook into the "Handset phonebook". For additional information on downloading your phonebook, refer to "Handset Phonebook" in this section. If your phonebook does not automatically download, you may set up the vehicle phonebook with up to 40 entries. This phonebook allows you to record a name to speak while using voice recognition.

Press the button on the steering wheel and then touch the "Vehicle Phonebook" key. Touch the "Add New" key at the top of the screen. This will allow the user to add new phonebook content via the methods listed below:

Menu Item			Result
Copy from Call History			The system will show a list of your incoming, outgoing, or missed calls that were downloaded from your cell phone (depending on your phone's compatibility). You may select one of these entries to save in the vehicle phonebook.
Copy from the Handset			The system will show your cell phone's phonebook that was downloaded (depending on your phone's compatibility). You may select one of these entries to save in the vehicle phonebook.
Enter Number by Keypad			Allows manual entry of phonebook contacts
	Ok		Saves the phonebook entry and then will show a screen that is ready to call the number. Press the BACK button to return to the Vehicle Phonebook.
	Entry #		Allows user to choose the entry number
	Name		Allows user to enter the contact name
	Number		Allows user to enter the contact number
	Type		Allows user to choose a type from the icon list
	Voicetag		Touch the "Voicetag" key to record a name to speak when using the Voice Recognition system
		Store	Touch the "Store" key and prepare to speak the name after the tone
		OK	When the voicetag is successfully saved, select the "OK" key to save the phonebook entry.

Press the button on the steering wheel and then touch the "Vehicle Phonebook" key. Next, select the desired entry from the displayed list. Touch the "Edit" key.

Menu Item	Result
Entry #	Changes the displayed number of the selected entry
Name	Edit the name of the entry using the keypad displayed on the screen
Number	Edit the phone number using the keypad displayed on the screen
Type	Select the icon from the icon list
Voicetag	Confirm and store the voicetag. Voicetags allow easy dialing using the INFINITI Voice Recognition System. For additional information, refer to "INFINITI Voice Recognition System" in this section.

HANDSET PHONEBOOK

Many phones will support an automatic download of the cellular phone's phonebook. Up to 1,000 numbers can be stored.

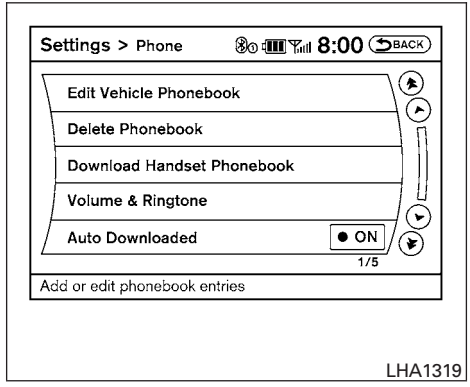

Transferring the handset phonebook

If your cellular phone supports automatic downloading, the system transfers the handset phonebook automatically by default. To ensure that this feature is activated, press the SETTING button on the instrument panel and select the "Phone" key. The "Auto Downloaded" selection should have the amber indicator next to the word ON activated. Select the "Auto Downloaded" key to toggle this feature on or off.

To transfer the handset phonebook to the vehicle manually, follow these steps:

1. Press the SETTING button on the control panel.
2. Select the "Phone" key.
3. Select the "Download Handset Phonebook" key.

Once the handset phonebook is transferred to the vehicle, it can be accessed by pressing the PHONE key on the instrument panel or the button on the steering wheel, then selecting the "Handset Phonebook" key.

Whether the handset phonebook is transferred manually or automatically, the process can take up to 5 minutes to complete, depending on the size of the handset phonebook. For additional information, refer to the cellular phone's owner's manual.

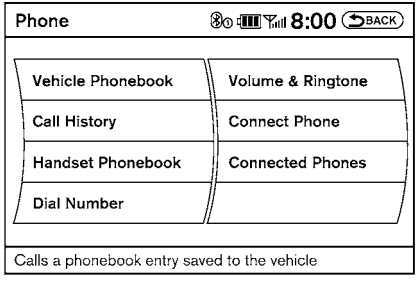

LHA1322

MAKING A CALL

Press the button on the steering wheel. The "Phone" screen will appear on the display. Select one of the following options to make a call:

Menu Item	Result
Vehicle Phonebook	Select the name from an entry stored in the vehicle phonebook. Dialing commences immediately.
Call History	Select the name from the incoming or outgoing call history. Dialing commences immediately.
Handset Phonebook	Select the name from an entry stored in the handset phonebook. Dialing commences immediately.
Dial Number	Input the phone number manually using the keypad on the screen. It will be necessary to select "OK" when finished for dialing to commence. For additional information on using the touch-screen, refer to "How to use the touch-screen" in this section.
Volume & Ringtone	For additional information, refer to "Phone settings" in this section.
Connect Phone	For additional information, refer to "Connecting procedure" in this section.
Connected Phones	Select this key to display a list of all connected phones.

RECEIVING A CALL

When you hear a phone ring, the display will change to phone mode. To receive a call, follow one of the procedures listed below:

Menu Item	Result
Press the button on the steering wheel	Accept an incoming call to talk.
"Answer" key on the display	Accept an incoming call to talk.
"Hold Call" key on the display	Put an incoming call on hold.
"Reject Call" key on the display	Reject an incoming call.

DURING A CALL

There are some options available during a call. Select one of the following displayed on the screen, if necessary:

Menu Item		Result
Hang Up		Finish the call. If pressed while another caller is on hold, current call will be ended and user will be able to speak to the caller that was previously on hold.
Use Handset		Transfer the call to the cellular phone.
Mute		Mute your voice to the person.
	Cancel Mute	This will appear after the "Mute" key is selected. Mute will be cancelled.
Keypad		Brings up a keypad. Enter digits when needed. For example, entering your PIN number for voicemail.
	Note	Press the button during a call to send numbers and digits using Voice Recognition.
Switch Call		Select this option to answer another incoming call (function may not be available depending on the model of the phone).

ENDING A CALL

To finish the call, perform one of the following procedures:

Menu Item	Result
"Hang up" key on the "Call in Progress" Display	Finish the call.
button on the steering wheel	Finish the call.

PHONE SETTINGS

To set up the Bluetooth® Hands-Free Phone System to your preferred settings, press the SETTING button on the control panel and touch the "Phone" key on the display.

Menu Item		Result
Edit Vehicle Phonebook		For additional information, refer to "Vehicle phonebook" in this section for adding, editing, and deleting contacts in the vehicle phonebook.
Delete Phonebook		Delete a phonebook stored on the system.
Download Handset Phonebook		For additional information, refer to "Handset phonebook" in this section for adding, editing, and deleting contacts in the handset phonebook.
Volume and Ringtone		Adjust the volume level of the ringtone, incoming call sound and outgoing call sound.
	Automatic Hold	When this option is turned on, an incoming call will be placed on hold automatically after several rings.
	Vehicle Ringtone	When this option is turned on, a specific ringtone that is different than the cellular phone's will sound when receiving a call.
Auto Downloaded		For additional information about automatically downloading the handset phonebook, refer to "Handset phonebook" in this section.

BLUETOOTH® SETTINGS

To set up the Bluetooth® Hands-Free Phone System to your preferred settings, press the SETTING button on the control panel and touch the "Bluetooth" key on the display.

Menu Item	Result
Bluetooth	Turn the Bluetooth® system on or off.
Connect Bluetooth	For additional information about connecting a phone, refer to "Connecting procedure" in this section.
Connected Devices	Display a list of the Bluetooth® devices connected to the system.
Edit Bluetooth Info	Check information about the device name, device address, and device PIN.
Replaced Connected Phone	Replace the phone currently connected to the system. This option allows you to keep an voicetags that were recorded using the previous phone.

CALL VOLUME

Adjusting the incoming or outgoing call volume may improve clarity if reception between callers is unclear. To access the volume settings, press the SETTING button, then select "Volume and Beeps". You can also adjust the volume of an incoming voice during a call by pushing the volume control switch on the steering wheel or by turning the volume control knob on the control panel:

Menu Item	Result
Ringtone	Adjusting this setting allows ringer volume to be set at a desired level.
Incoming Call	Adjusting this setting allows *you* to hear a difference in volume (You can also adjust the volume of an incoming voice during a call by pushing the volume control switch on the steering wheel or by turning the volume control knob.
Outgoing Call	Adjusting this setting allows *the person you are talking with* to hear a difference in volume.

INFINITI VOICE RECOGNITION SYSTEM (if so equipped)

INFINITI Voice Recognition allows hands-free operation of the systems equipped on this vehicle, such as phone and vehicle information.

There are two voice recognition modes of operation available. They are:

- Standard Mode
- Alternate Command Mode

In Standard Mode (the factory default setting), commands that are available are always shown on the display and announced by the system. You can complete your desired operation by simply following the prompts given by the system. Not all INFINITI Voice Recognition options are available while in Standard Mode.

For advanced operation, you can change to an Alternate Command Mode that enables the operation of the display and audio system through INFINITI Voice Recognition. When this mode is active, an expanded list of commands can be spoken after pushing the TALK switch on the steering wheel, and the voice command menu prompts are turned off.

In Alternate Command Mode the recognition success rate may be affected because the number of available commands and the ways of speaking each command are increased. For additional information, refer to “INFINITI Voice Recognition Alternate Command Mode” in this section.

To improve the recognition success rate when Alternate Command Mode is active, try using the Speaker Adaptation Function available in that mode. For additional information, refer to “Speaker Adaptation Function” in this section. Otherwise, it is recommended that Alternate Command Mode be turned off and Standard Mode be used for the best recognition performance.

While using the INFINITI Voice Recognition system for certain Phone and Navigation features, you can switch to using manual controls (touchscreen, INFINITI controller, steering wheel controls) and the information you have already entered by voice control will be retained. To switch to manual controls, select the “Manual Controls” key on the display when it appears. The system will respond by speaking “Changing to manual operation. Please use manual controls to continue.”

For the voice commands for the navigation system, refer to the Navigation System Owner’s Manual of your vehicle.

For vehicles in the U.S., the factory default setting is the Standard Mode. For additional information, refer to “INFINITI Voice Recognition Standard Mode” in this section. For vehicles in Canada, the factory default setting is the Alternate Command Mode. For additional information, refer to “INFINITI Voice Recognition Alternate Command Mode” in this section.

INFINITI VOICE RECOGNITION STANDARD MODE

The Standard Mode enables control of navigation, phone and vehicle information. With this setting active, commands that are available are always shown on the display and announced by the system.

Displaying user guide

If you use the INFINITI Voice Recognition system for the first time or you do not know how to operate it, you can display the User Guide for confirmation.

You can confirm how to use voice commands by accessing a simplified User Guide, which contains basic instructions and tutorials for several voice commands.

1. Press the INFO button on the control panel.
2. Touch the “Others” key.
3. Touch the “Voice Recognition” key.
4. Touch the “User Guide” key.
5. Touch an item.

NOTE:

You can skip steps 1 to 3 by pressing the button and saying "Help" followed by "User Guide".

Menu Item		Result
Getting Started		The following message will appear: "With voice recognition, you can use voice commands to control navigation, audio, phone, and other functions. To start the voice recognition system, push the TALK switch on the steering wheel, then say a command after the tone".
Let's Practice		Initiates a practice session that demonstrates how to improve voice recognition by the system. The system will prompt you to say a phone number. After you say the number, the system will provide feedback to improve voice recognition. When you are ready, push the TALK switch.
	Try again	Allows user to repeat the session if improvement is needed.
	Done	Completes practice session and returns user to the User Guide screen.
Using the Address Book		Initiates tutorial for using the Address Book.
Finding a Street Address		Initiates tutorial for finding a street address.
Placing Calls		Initiates tutorial for making a phone call by voice command operation.
Help on Speaking		Displays useful tips of speaking for correct command recognition by the system: "Say commands when there are minimal background sounds; Say voice commands clearly; Avoid talking slow or with long pauses; Say commands after the tone".

Voice recognition settings

The available settings of the INFINITI Voice Recognition system are described.

1. Press the SETTING button on the control panel
2. Touch the ”Others” key
3. Touch the “Voice Recognition” key

You can confirm the page by scrolling the screen using the INFINITI controller.

Menu Item	Result
Command List	When Alternate Command Mode is activated, this key will allow user to access the list of Phone, Navigation, Information, Audio, and Help commands.
User Guide	Allows user access to user guide settings. For additional information, refer to “Displaying User Guide” in this section.
Speaker Adaptation	When Alternate Command Mode is activated, this key will allow user to initiate a system function for better voice recognition performance. For additional information, refer to “Speaker Adaptation Function” in this section.
Alternate Command Mode	Allows user to activate Alternate Command Mode. A screen will appear prompting user to review the expanded command list and advises that some command will be replaced and voice menu prompts turned off. User will have to confirm by pressing “OK” to proceed with activation.
Minimize Voice Feedback	When Alternate Command Mode is activated, this key will allow user to reduce system voice feedback during voice recognition session.

USING THE SYSTEM

Initialization

When the ignition switch is placed in the ON position, INFINITI Voice Recognition is initialized, which takes a few seconds. When completed, the system is ready to accept voice commands. If the switch is pressed before the initialization completes, voice commands will not be accepted. Please wait until the INFINITI Voice Recognition initialization is completed.

BEFORE STARTING

To get the best recognition performance from Voice Recognition, observe the following:

- The interior of the vehicle should be as quiet as possible. Close the windows to eliminate the surrounding noises (traffic noise and vibration sounds, etc.), which may prevent the system from correctly recognizing the voice commands.
- Wait until the tone sounds before speaking a command.
- Speak in a natural conversational voice without pausing between words.
- If the air conditioner is set to “Auto”, the fan speed is automatically lowered so that your commands can be recognized more easily.

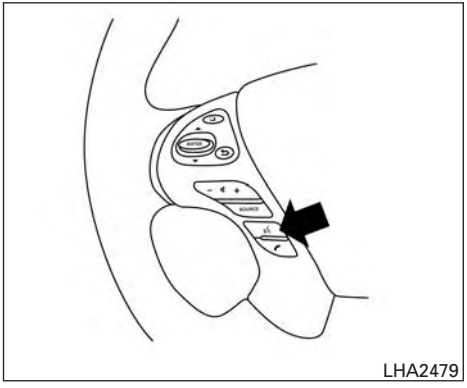

GIVING VOICE COMMANDS

1. Press the switch located on the steering wheel.

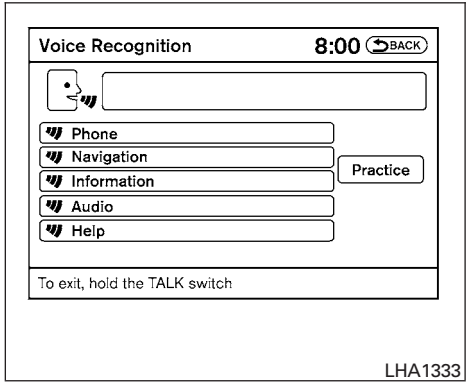

2. A list of commands appears on the screen, and the system announces, “Would you like to access Phone, Navigation, Information, Audio or Help?”
3. After the tone sounds and the icon on the screen changes from to , speak a command.
4. Continue to follow the voice menu prompts and speak after the tone sounds until your desired operation is completed.

Operating tips

- Say a command after the tone. Voice commands cannot be accepted when the icon is .
- Commands that are available are always shown on the display and spoken through voice menu prompts. Commands other than those that are displayed are not accepted. Please follow the prompts given by the system.
- If the command is not recognized, the system repeats the announcement. Repeat the command in a clear voice.
- Say “Back” when prompted to return to the previous screen.
- If you want to cancel the command, press and hold the switch. The message, “Voice Recognition is cancelled” will be announced.
- If you want to adjust the volume of the system feedback, push the volume control switch on the steering wheel or use the audio system volume knob while the system is making an announcement.

How to speak numbers

Voice Recognition requires a certain way to speak numbers when giving voice commands. Refer to the following examples.

General rule

- Only single digits 0 (zero) to 9 can be used.
- When saying the phone number 800-662-6200, the system will accept “eight-hundred” in addition to “eight zero zero” or “eight oh oh”. 500, 700, and 900 are also supported.

Examples

- 1-800-662-6200
  - “One eight zero zero six six two six two zero zero”
  - “One eight hundred six six two six two zero zero”

Improving Recognition of Phone numbers

You can improve the recognition of phone numbers by saying the phone number in three groups of numbers. For example, when you try to call 800-662-6200, say “eight zero zero” first, and the system will then ask you for the next 3 digits. Then, say “six six two”. After recognition, the system will then ask for the last 4 digits. Say, “six two zero zero”. Using this method of phone digit entry can improve recognition performance.

NOTE:

When speaking a house number, speak the number “0” as “zero” or “oh”. If the letter “O” is included in the house number, it will not be recognized as “0” even if you speak “oh” instead of “zero”.

Standard Mode command list

Category Commands

COMMAND	ACTION
Phone	Displays Phone function commands.
Navigation	Displays Navigation function commands.
Information	Displays Vehicle Information.
Audio	Displays Audio commands.
Call (name)	Makes a call to a contact that is stored in either phonebook. Please say “Call” followed by a stored name.
Help	Displays user guide (this command is not displayed on the screen).

Phone Commands

COMMAND	ACTION
Dial Number	Makes a call to a spoken phone number up to 10 digits.
Vehicle Phonebook	Makes a call to a contact that is stored in the vehicle phonebook.
Handset Phonebook	Makes a call to a contact that is stored in the handset phonebook.
Call History	Makes a call to a number in the incoming or outgoing call logs.
International Call	Makes an international call by allowing more than 10 digits to be spoken, as well as star (*), pound (#), and plus (+).

Navigation Commands

COMMAND	ACTION
Destination Home	Sets a route to your home that is stored in the Address Book.
Address	Allows user to set destination address.
Places	Sets a route to a facility near the current vehicle location.
Address Book	Searches for a location stored in the Address Book.
Previous Destinations	Sets a route to a previous destination.

Vehicle Information Commands

COMMAND	ACTION
Fuel Economy	Displays Fuel Economy information.
Maintenance	Displays Maintenance information.
Traffic Information	Turns the traffic information system on and off.
Where am I?	Displays current vehicle location.

Audio Commands

COMMAND	ACTION
AM	Changes the audio system mode to AM radio.
FM	Changes the audio system mode to FM radio.
XM	Changes the audio system mode to XM radio.
CD	Changes the audio system mode to CD.

Voice command examples

Some basic voice command examples are described here.

For navigation system commands, refer to the separate Navigation System Owner's Manual.

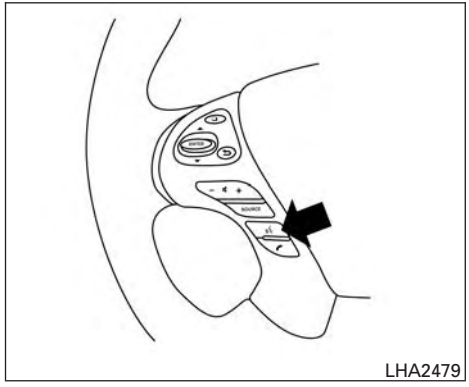

Example 1 — Placing a call to the phone number 800-662-6200:

1. Press the button located on the steering wheel.
2. The system announces, "Would you like to access Phone, Navigation, Information, Audio or Help?"
3. Say "Phone".
4. Say "Dial Number".
5. Say "800".
6. The system announces, "Please say the next 3 digits or dial, or say change number."
7. Say "662".
8. The system announces, "Please say the last 4 digits or say change number."
9. Say "6200".
10. The system announces, "Dial or Change Number?"
11. Say "Dial".
12. The system makes a call to 800-662- 6200.

NOTE:

- You can also speak "800-662-6200" (10 continuous digits) or "662-6200" (7 continuous digits), if the area code is not necessary. However, the 3-3-4 digit grouping is recommended for improved recognition. For additional information, refer to "How to speak numbers" in this section.
- You can only say a phone number using the 3-3-4 grouping, 7 digits, and 10 digits using this command. Please use the "International Call" command for all other formats, and when special characters such as star (*), pound (#), and plus (+) need to be entered.

- If you say “Change Number” during phone number entry, the system will automatically request that you repeat the number using the 3-3-4 format. In this case please say the area code first and then follow the prompts.
- Do not add a “1” in front of the area code when speaking phone numbers.
- If the system does not recognize your command, please try repeating the command using a natural voice. Speaking too slowly or too loudly may further decrease recognition performance.

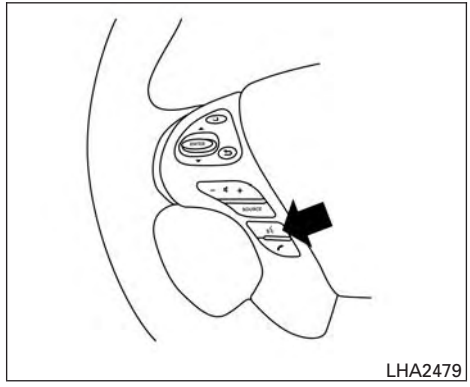

Example 2 — Placing an international call to the phone number 011-81-111-222-3333:

1. Press the button located on the steering wheel.
2. The system announces, “Would you like to access Phone, Navigation, Information, Audio or Help?”
3. Say “Phone”.
4. Say “International Call”.
5. Say “011811112223333”.
6. Say “Dial”.
7. The system makes a call to 011-81-111-222-3333.

NOTE:

Any digit input format is available in the International Number input process, as well as the special characters such as star (*), pound (#), and plus (+).

INFINITI VOICE RECOGNITION ALTERNATE COMMAND MODE

The Alternate Command Mode enables control of the audio and display systems as well as additional commands for the Vehicle Information, Phone and Navigation systems. With this setting active, the system does not announce or display the available commands at each step.

When Alternate Command Mode is activated, an expanded list of commands can be used after pushing the TALK switch. Under this mode, the screen for Standard Mode commands is not available on the display. Please review the expanded command list, available when this mode is active, as some Standard Mode commands are replaced. Please see examples of Alternate Command Mode screens.

Please note that in this mode the recognition success rate may be affected as the number of available commands and ways of speaking each command are increased. You can turn this mode ON or OFF. When this mode is activated, the Voice Recognition Settings will change to show more options.

Activating Alternate Command Mode

1. Press the SETTING button on the control panel.
2. Touch the “Others” key on the display.
3. Touch the “Voice Recognition” key.
4. Touch the “Alternate Command Mode” key.
5. The confirmation message is displayed on the screen. Touch the “OK” key to activate the Alternate Command Mode.
6. Alternate Command Mode is activated and the setting menu is expanded to include the Alternate Command Mode options. Refer to “Voice Recognition Settings” in this section for an explanation of the options.

Displaying the command list

If you are controlling the system by voice commands for the first time or do not know the appropriate voice command, perform the following procedure for displaying the voice command list (available only in Alternate Command Mode).

Press the switch, listen for the tone and say, “Help”. The system will respond by displaying the command list main menu.
Only manual controls such as the touch-screen can navigate the command list menu.

As an alternative to the voice command “Help”, you may access the command list using the following steps:

1. Press the SETTING button on the control panel.
2. Select the “Others” key using the INFINITI controller.
3. Select the “Voice Recognition” key using the INFINITI controller.

NOTE:

You can skip steps 1 to 3 if you say “Help”.

4. Select the “Command List” key using the INFINITI controller.
5. Select a category using the INFINITI controller. The command list for the category selected is shown.
6. If necessary, scroll the screen using the INFINITI controller to view the entire list.
7. Press the (back) button to return to the previous screen.

Alternate Command Mode command list

Phone Command

COMMAND	ACTION
Dial Number	Makes a call to a spoken phone number up to 10 digits.
Vehicle Phonebook	Makes a call to a contact in the vehicle phonebook.
Handset Phonebook	Makes a call to a contact in the handset phonebook.
International Call	Makes an international call by allowing more than 10 digits to be spoken, as well as star (*), pound (#), and plus (+).
Incoming Calls	Shows the last 5 incoming phone calls.
Outgoing Calls	Shows the last 5 outgoing phone calls.
Missed Calls	Shows the last 5 missed phone calls.
Call <name>	Makes a call to a contact that is stored in either the Vehicle Phonebook or Handset Phonebook. Please say “Call” followed by a stored name.

Navigation Command

COMMAND	ACTION
Destination Home	Sets a route to your home that is stored in the Address Book.
Address	Searches for a location by the street address specified, and sets a route (for continental US and Canada only).
Places	Sets a route to a facility near the current vehicle location.
Address Book	Displays the first 5 entries of the Address Book.
Previous Destinations	Sets a route to a previous destination.
Previous Start Point	Calculates a route to your previous starting point of the last route.
Minimize Freeway Route	Recalculates a route to the current destination while minimizing freeway usage.
Fastest Route	Recalculates a route to the current destination using the fastest estimated time.
Shortest Route	Recalculates a route to the current destination using the shortest distance.
Cancel Route	Cancels the current route.
Delete Destination	Deletes the current destination.
Birdview Map	Changes the Map display to Birdview.
Planview Map	Changes the Map display to a 2-dimensional view.

COMMAND	ACTION
North Up	Changes the Map display to keep north pointing up on the screen.
Heading Up	Changes the Map display to keep the direction of the vehicle pointing up on the screen.
Zoom In <1 to 13>	Changes the map scale to a smaller number.
Zoom Out <1 to 13>	Changes the map scale to a larger number.
Guidance Voice ON/OFF	Turns the navigation voice guidance on or off.
Guide Voice Repeat	Repeats the last navigation voice guidance.

Information Command

COMMAND	ACTION
Fuel Economy	Displays Fuel Economy information.
Maintenance	Display Maintenance information.
Traffic Information	Turns the traffic information system on and off.
Where am I?	Displays the current vehicle location.
Weather Information	Displays weather information.
Weather Map	Displays the current weather map.

Audio Command

COMMAND	ACTION
AM	Turns to the AM band, selecting the station last played.
FM	Turns to the FM band, selecting the station last played.
XM	Turns to the SAT band, selecting the station last played.
CD	Starts to play a CD.
USB	Turns to the USB audio input.
Bluetooth Audio	Turns to the Bluetooth® audio system.
AUX	Turns to the AUX input.

Displaying user guide

You can confirm how to use voice commands by accessing a simplified User Guide, which contains basic instructions and tutorials for several voice commands.

1. Press the INFO button on the control panel.
2. Touch the “Others” key.
3. Touch the “Voice Recognition” key.
4. Touch the “User Guide” key.
5. Select an item.

Menu Item	Result
Getting Started	Describes the basics of how to operate the Voice Recognition system.
Let’s Practice	Initiates a practice session that demonstrates how to improve recognition by the system
Using the Address Book	Tutorial for using the Address Book
Finding a Street Address	Tutorial for Finding a Street Address
Placing Calls	Tutorial for making a phone call by voice command operation
Help on Speaking	Displays useful tips for how to correctly speak commands in order for them to be properly recognized by the system
Voice Recognition Settings	Describes the available Voice Recognition settings. For additional information, refer to “Voice Recognition Settings” in this section
Adapting the System to Your Voice	Tutorial for adapting the system to your voice

USING THE SYSTEM

Initialization

When the ignition switch is placed in the ON position, INFINITI Voice Recognition is initialized, which takes a few seconds. When completed, the system is ready to accept voice commands. If the switch is pressed before the initialization completes, the display will show the message: “System not ready” or a beep sounds.

Before starting

To get the best performance from INFINITI Voice Recognition, observe the following:

- Keep the interior of the vehicle as quiet as possible. Close the windows to eliminate the surrounding noises (traffic noises, vibration sounds, etc.), which may prevent the system from recognizing the voice commands correctly.
- When the climate control is in the AUTO mode, the fan speed decreases automatically for easy recognition.
- Wait until a tone sounds before speaking a command.
- Speak in a natural voice without pausing between words.

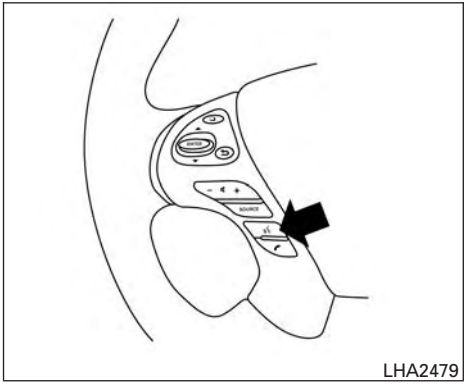

Giving voice commands

1. Press and release the button located on the steering wheel.

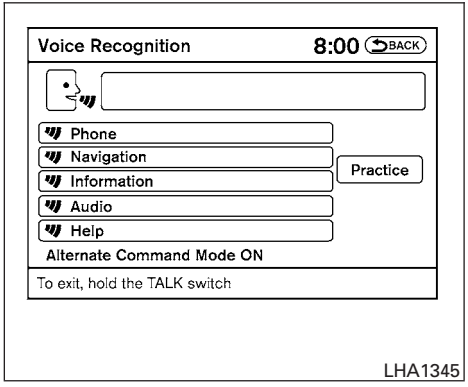

2. A list of commands appears on the screen, and the system announces, “Please say a command from the displayed list or say Help to show all commands.”
3. After the tone sounds and the icon on the screen changes from to , speak a command.
4. Once a command is recognized, the system will announce the recognized command and perform the requested action.

   If the command is not recognized, the system repeats the announcement. Repeat the command in a clear voice after the tone.

Operating tips

- Say a command after the tone. Voice commands cannot be accepted when the icon is .
- If the command is not recognized, the system repeats the announcement. Repeat the command in a clear voice.
- Say “Back” when prompted to return to the previous screen.
- If you want to cancel the command, press and hold the switch. The message, “Voice recognition is cancelled” will be announced.
- If you want to adjust the volume of the system feedback, push the volume control switch on the steering wheel or use the audio system volume knob while the system is making an announcement.
- To minimize the amount of prompts spoken by the system in Alternate Command Mode, use the Minimize Voice Feedback function. To access the Minimize Voice Feedback function press the SETTING button, then select the “Others” key. Then select the “Voice Recognition” key.

How to speak numbers

Voice Recognition requires a certain way to speak numbers when giving voice commands. Refer to the following examples.

General rule

- Only single digits 0 (zero) to 9 can be used.
- When saying the phone number 800-662-6200, the system will accept “eight-hundred” in addition to “eight zero zero” or “eight oh oh”. 500, 700, and 900 are also supported.

Examples

- 1-800-662-6200
  - “One eight zero zero six six two six two zero zero”
  - “One eight hundred six six two six two zero zero”

Improving Recognition of Phone numbers

You can improve the recognition of phone numbers by saying the phone number in three groups of numbers. For example, when you try to call 800-662-6200, say “eight zero zero” first, and the system will then ask you for the next 3 digits. Then, say “six six two”. After recognition, the system will then ask for the last 4 digits. Say, “six two zero zero”. Using this method of phone digit entry can improve recognition performance.

NOTE:

When speaking a house number, speak the number “0” as “zero” or “oh”. If the letter “O” is included in the house number, it will not be recognized as “0” even if you speak “oh” instead of “zero”.

Settings menu

The content of the Settings Menu differs when the system is in the Alternate Command Mode.

Command List

Displays the command list for Alternate Command Mode.

User Guide

The user guide provides basic instructions for using Voice Recognition and accessing some voice commands.

NOTE:

The user guide can also be accessed from within the INFO menu after pressing the INFO button.

Speaker Adaptation

Starts a system training procedure to learn the specific sounds of your voice. For additional information, refer to “Speaker adaptation function” in this section.

Alternate Command Mode

For advanced operation, an Alternate Command Mode is provided. This setting enables control of the audio system as well as additional commands for the Phone and Navigation systems. With this setting active, the system does not announce or display the available commands at each step. When this mode is activated, the Voice Recognition Settings will change to show more options.

Minimize Voice Feedback

Reduces the amount of the information spoken for each voice instruction.

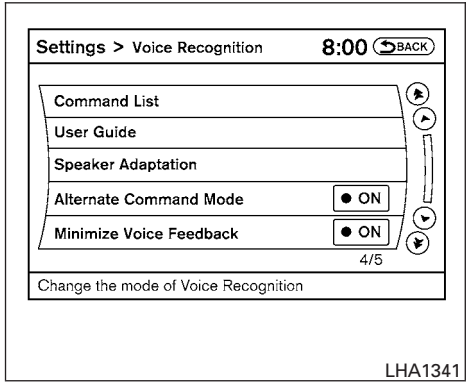

SPEAKER ADAPTATION FUNCTION

The Voice Recognition system has a function to learn the user’s voice for better voice recognition performance. The system can memorize the voices of up to three persons.

Having the system learn the user’s voice

1. Press the SETTING button on the control panel.
2. Touch the “Others” key.
3. Touch the “Voice Recognition” key.
4. Touch the “Speaker Adaptation” key.
5. Select the user whose voice is to be memorized by the system.
6. Select a category to be learned by the system from the following list:
   - Phone
   - Navigation
   - Information
   - Audio
   - Help

   The voice commands in the category are displayed.
7. Select a voice command to train.

   The Voice Recognition system starts.
8. The system requests that you repeat a command after a tone. This command is also displayed on the screen.
9. After the tone sounds and the icon on the screen changes from to , speak the command that the system requested.
10. When the system has recognized the voice command, the voice of the user is learned.

Press the switch or the BACK button to return to the previous screen.

If the system has learned the command correctly, the voice command indicator on the screen turns on.

Speaker Adaptation function settings

Edit Name

Edit the user name using the keypad displayed on the screen.

Reset Result

Resets the user's voice that the Voice Recognition system has learned.

Continuous Learning

When this item is turned to ON, you can have the system learn the voice commands in succession, without selecting commands one by one.

TROUBLESHOOTING GUIDE

The system should respond correctly to all voice commands without difficulty. If problems are encountered, follow the solutions given in this guide for the appropriate error.

Where the solutions are listed by number, try each solution in turn, starting with number one, until the problem is resolved.

Symptom/error message	Solution
Displays "COMMAND NOT RECOGNIZED" or the system fails to interpret the command correctly.	1. Ensure that the command format is valid, refer to "Standard Mode command list" or "Alternate Command Mode command list" in this section. 2. Speak clearly using your normal speech pattern and at a level appropriate to the ambient noise level. 3. Ensure that the ambient noise level is not excessive, for example, windows open or defrost on. **NOTE:** **If it is too noisy to use the phone, it is likely that voice commands will not be recognized.**
The system consistently selects the wrong voicetag in the phonebook.	1. Ensure that the voicetag requested matches what was originally stored. For additional information, refer to "Bluetooth® Hands-Free Phone System with Navigation System" in this section. 2. Replace one of the voicetags being confused with a different voicetag.

5 Starting and driving

Precautions when starting and driving. 5-4
Exhaust gas (carbon monoxide) 5-4
Three-way catalyst. 5-4
Tire Pressure Monitoring System (TPMS). 5-5
On-pavement and off-road driving precautions 5-9
Avoiding collision and rollover. 5-9
Off-road recovery. 5-9
Rapid air pressure loss. 5-10
Drinking alcohol/drugs and driving. 5-10
Driving safety precautions 5-11
Intelligent All-Wheel Drive (AWD) driving safety precautions (if so equipped) 5-12
Push-Button Ignition Switch 5-13
Operating range. 5-14
Push-button ignition switch positions 5-14
Emergency engine shut off 5-15
INFINITI Intelligent Key battery discharge 5-15
INFINITI Vehicle Immobilizer System 5-16
Before starting the engine 5-16
Starting the engine 5-17
Remote start (if so equipped) 5-17
Driving the vehicle 5-18
Continuously Variable Transmission (CVT). 5-18
Parking brake 5-22
INFINITI Drive Mode Selector 5-23
Standard mode. 5-23
Sport mode 5-23
Snow mode. 5-23
ECO mode 5-24
Lane Departure Warning (LDW) (if so equipped). 5-26
LDW system operation. 5-27
How to enable/disable the LDW system 5-28
LDW system limitations 5-29
System temporarily unavailable. 5-30
System maintenance. 5-30
Lane Departure Prevention (LDP) (if so equipped). . . . 5-31
LDP system operation. 5-32
How to enable/disable the LDP system 5-33
LDP system limitations 5-34
System temporarily unavailable. 5-35
System maintenance. 5-36
Blind Spot Warning (BSW) (if so equipped). 5-37
BSW system operation 5-39
How to enable/disable the BSW system 5-40
BSW system limitations 5-40

BSW driving situations 5-41
System temporarily unavailable 5-45
System maintenance 5-45
Blind Spot Intervention® (BSI) (if so equipped) 5-46
BSI system operation 5-48
How to enable/disable the BSI system 5-50
BSI system limitations 5-50
BSI driving situations 5-52
System temporarily unavailable 5-56
System malfunction 5-56
System maintenance 5-57
Back-up Collision Intervention (BCI)
(if so equipped) 5-58
BCI system operation 5-60
Turning the BCI system on/off 5-62
BCI system limitations 5-63
System temporarily not available 5-64
System malfunction 5-65
System maintenance 5-65
Rear Cross Traffic Alert (RCTA) (if so equipped) 5-66
RCTA system operation 5-67
How to enable/disable the RCTA system 5-68
RCTA system limitations 5-69
System temporarily unavailable 5-72
System maintenance 5-73
Cruise control (if so equipped) 5-74
Precautions on cruise control 5-74
Cruise control operations 5-75
Intelligent Cruise Control (ICC) (if so equipped) 5-76
ICC system operation 5-77
The ICC switch 5-79
ICC system limitations 5-84
System temporarily unavailable 5-87
System maintenance 5-89
Conventional (fixed speed) cruise control
mode 5-89
Preview Function 5-93
Distance Control Assist (DCA) (if so equipped) 5-95
DCA system operation 5-95
How to enable/disable the DCA system 5-98
DCA system limitations 5-99
DCA driving situations 5-101
System temporarily unavailable 5-103
System maintenance 5-105
Forward Emergency Braking (FEB)
(if so equipped) 5-106

FEB system operation 5-107
Turning the FEB system on/off 5-109
FEB system limitations 5-109
System temporarily unavailable 5-111
System malfunction 5-111
System maintenance 5-111
Pedestrian Forward Emergency Braking (PFEB) system (if so equipped) 5-112
System operation 5-114
PFEB system limitations 5-114
Turning the PFEB system ON/OFF 5-116
System temporarily unavailable 5-116
System malfunction 5-116
System maintenance 5-117
Predictive Forward Collision Warning (PFCW) (if so equipped) 5-117
PFCW system operation 5-119
Turning the PFCW system on/off 5-120
PFCW system limitations 5-121
System temporarily unavailable 5-126
System malfunction 5-127
System maintenance 5-127
Break-in schedule 5-128
Fuel efficient driving tips 5-128
Increasing fuel economy 5-130
Intelligent All-Wheel Drive (AWD) (if so equipped) . . 5-130
Parking/parking on hills 5-133
Power steering 5-134
Brake system 5-134
Brake precautions 5-134
Anti-lock Braking System (ABS) 5-135
Brake assist 5-136
Vehicle Dynamic Control (VDC) system 5-136
Active Trace Control (if so equipped) 5-138
Brake force distribution 5-138
Hill start assist system 5-139
Front and Rear Sonar System (if so equipped) 5-140
System operation 5-140
How to enable/disable the Sonar system 5-142
Sonar limitations 5-143
System temporarily unavailable 5-143
System maintenance 5-143
Cold weather driving 5-144
Freeing a frozen door lock 5-144
Antifreeze 5-144
Battery 5-144

Draining of coolant water 5-144
Tire equipment 5-144
Special winter equipment. 5-145
Driving on snow or ice 5-145
Engine block heater (if so equipped). 5-145

⚠WARNING

- **Do not leave children or adults who would normally require the assistance of others alone in your vehicle. Pets should also not be left alone. They could accidentally injure themselves or others through inadvertent operation of the vehicle. Also, on hot, sunny days, temperatures in a closed vehicle could quickly become high enough to cause severe or possibly fatal injuries to people or animals.**
- **Properly secure all cargo with ropes or straps to help prevent it from sliding or shifting. Do not place cargo higher than the seatbacks. In a sudden stop or collision, unsecured cargo could cause personal injury.**

EXHAUST GAS (carbon monoxide)

⚠WARNING

- **Do not breathe exhaust gases; they contain colorless and odorless carbon monoxide. Carbon monoxide is dangerous. It can cause unconsciousness or death.**
- **If you suspect that exhaust fumes are entering the vehicle, drive with all windows fully open, and have the vehicle inspected immediately.**
- **Do not run the engine in closed spaces such as a garage.**
- **Do not park the vehicle with the engine running for any extended length of time.**
- **Keep the rear vent windows, liftgates, doors and trunk lids (if so equipped) closed while driving, otherwise exhaust gases could be drawn into the passenger compartment. If you must drive with one of these open, follow these precautions:**
  1. **Open all the windows.**
  2. **Set the air recirculation button to off and the fan control dial to high to circulate the air.**
- **If electrical wiring or other cable connections must pass to a trailer through the seal on the liftgate or the body, follow the manufacturer's recommendation to prevent carbon monoxide entry into the vehicle.**
- **The exhaust system and body should be inspected by a qualified mechanic whenever:**
  a. **The vehicle is raised for service.**
  b. **You suspect that exhaust fumes are entering into the passenger compartment.**
  c. **You notice a change in the sound of the exhaust system.**
  d. **You have had an accident involving damage to the exhaust system, underbody, or rear of the vehicle.**

THREE-WAY CATALYST

The three-way catalyst is an emission control device installed in the exhaust system. Exhaust gases in the three-way catalyst are burned at high temperatures to help reduce pollutants.

⚠ WARNING

- **The exhaust gas and the exhaust system are very hot. Keep people, animals or flammable materials away from the exhaust system components.**
- **Do not stop or park the vehicle over flammable materials such as dry grass, waste paper or rags. They may ignite and cause a fire.**

⚠ CAUTION

- **Do not use leaded gasoline. Deposits from leaded gasoline will seriously reduce the three-way catalyst's ability to help reduce exhaust pollutants.**
- **Keep your engine tuned up. Malfunctions in the ignition, fuel injection, or electrical systems can cause over rich fuel flow into the three-way catalyst, causing it to overheat. Do not keep driving if the engine misfires, or if noticeable loss of performance or other unusual operating conditions are detected. Have the vehicle inspected promptly. It is recommended that you visit an INFINITI retailer for this service.**
- **Avoid driving with an extremely low fuel level. Running out of fuel could cause the engine to misfire, damaging the three-way catalyst.**
- **Do not race the engine while warming it up.**
- **Do not push or tow your vehicle to start the engine.**

TIRE PRESSURE MONITORING SYSTEM (TPMS)

Each tire, including the spare (if provided), should be checked monthly when cold and inflated to the inflation pressure recommended by the vehicle manufacturer on the vehicle placard or tire inflation pressure label. (If your vehicle has tires of a different size than the size indicated on the vehicle placard or tire inflation pressure label, you should determine the proper tire inflation pressure for those tires.)

As an added safety feature, your vehicle has been equipped with a TPMS that illuminates a low tire pressure telltale when one or more of your tires is significantly under-inflated. Accordingly, when the low tire pressure telltale illuminates, you should stop and check your tires as soon as possible, and inflate them to the proper pressure. Driving on a significantly under-inflated tire causes the tire to overheat and can lead to tire failure. Under-inflation also reduces fuel efficiency and tire tread life, and may affect the vehicle's handling and stopping ability.

Please note that the TPMS is not a substitute for proper tire maintenance, and it is the driver's responsibility to maintain correct tire pressure, even if under-inflation has not reached the level to trigger illumination of the TPMS low tire pressure telltale.

Your vehicle has also been equipped with a TPMS malfunction indicator to indicate when the system is not operating properly. The TPMS malfunction indicator is combined with the low tire pressure telltale. When the system detects a malfunction, the telltale will flash for approximately one minute and then remain continuously illuminated. This sequence will continue upon subsequent vehicle start-ups as long as the malfunction exists. When the malfunction indicator is illuminated, the system may not be able to detect or signal low tire pressure as intended. TPMS malfunctions may occur for a variety of reasons, including the installation of replacement or alternate tires or wheels on the vehicle that prevent the TPMS from functioning properly. Always check the TPMS malfunction telltale after replacing one or more tires or wheels on your vehicle to ensure that the replacement or alternate tires and wheels allow the TPMS to continue to function properly.

Additional information:

- Since the spare tire is not equipped with the TPMS, the TPMS does not monitor the tire pressure of the spare tire.
- The TPMS will activate only when the vehicle is driven at speeds above 16 mph (25 km/h). Also, this system may not detect a sudden drop in tire pressure (for example a flat tire while driving).
- The low tire pressure warning light does not automatically turn off when the tire pressure is adjusted. After the tire is inflated to the recommended pressure, the vehicle must be driven at speeds above 16 mph (25 km/h) to activate the TPMS and turn off the low tire pressure warning light. Use a tire pressure gauge to check the tire pressure.
- The “Tire Pressure Low — Add Air” warning appears in the vehicle information display when the low tire pressure warning light is illuminated and low tire pressure is detected. The “Tire Pressure Low - Add Air” warning turns off when the low tire pressure warning light turns off.
- The “Tire Pressure Low — Add Air” warning appears each time the ignition switch is in the ON position as long as the low tire pressure warning light remains illuminated.
- The “Tire Pressure Low — Add Air” warning does not appear if the low tire pressure warning light illuminates to indicate a TPMS malfunction.
- Tire pressure rises and falls depending on the heat caused by the vehicle’s operation and the outside temperature. Do not reduce the tire pressure after driving because the tire pressure rises after driving. Low outside temperature can lower the temperature of the air inside the tire which can cause a lower tire inflation pressure. This may cause the low tire pressure warning light to illuminate. If the warning light illuminates, check the tire pressure for all four tires.
- The Tire and Loading Information label (also referred to as the vehicle placard or tire inflation pressure label) is located in the driver’s door opening.
- You can also check the pressure of all tires (except the spare tire) on the vehicle information display screen. The order of the tire pressure figures displayed on the screen corresponds with the actual order of the tire position.

For additional information, refer to “Low tire pressure warning light” and “Tire Pressure Low — Add Air” in the “Instruments and controls” section and “Tire Pressure Monitoring System (TPMS)” in the “In case of emergency” section of this manual.

⚠ WARNING

- **Radio waves could adversely affect electric medical equipment. Those who use a pacemaker should contact the electric medical equipment manufacturer for the possible influences before use.**

- **If the low tire pressure warning light illuminates while driving, avoid sudden steering maneuvers or abrupt braking, reduce vehicle speed, pull off the road to a safe location and stop the vehicle as soon as possible. Driving with under-inflated tires may permanently damage the tires and increase the likelihood of tire failure. Serious vehicle damage could occur and may lead to an accident and could result in serious personal injury. Check the tire pressure for all four tires. Adjust the tire pressure to the recommended COLD tire pressure shown on the Tire and Loading Information label to turn the low tire pressure warning light OFF. If you have a flat tire, replace it with a spare tire as soon as possible. (For additional information, refer to "Flat tire" in the "In case of emergency" section for changing a flat tire.)**
- **Since the spare tire is not equipped with the TPMS, when a spare tire is mounted or a wheel is replaced, tire pressure will not be indicated, the TPMS will not function and the low tire pressure warning light will flash for approximately 1 minute. The light will remain on after 1 minute. Have your tires replaced and/or TPMS system reset as soon as possible. It is recommended that you visit an INFINITI retailer for this service.**
- **Replacing tires with those not originally specified by INFINITI could affect the proper operation of the TPMS.**
- **Do not inject any tire liquid or aerosol tire sealant into the tires, as this may cause a malfunction of the tire pressure sensors.**

⚠ CAUTION

- **The TPMS may not function properly when the wheels are equipped with tire chains or the wheels are buried in snow.**
- **Do not place metalized film or any metal parts (antenna, etc.) on the windows. This may cause poor reception of the signals from the tire pressure sensors, and the TPMS will not function properly.**

Some devices and transmitters may temporarily interfere with the operation of the TPMS and cause the low tire pressure warning light to illuminate.

Some examples are:

– Facilities or electric devices using similar radio frequencies are near the vehicle.

– If a transmitter set to similar frequencies is being used in or near the vehicle.

– If a computer (or similar equipment) or a DC/AC converter is being used in or near the vehicle.

Low tire pressure warning light may illuminate in the following cases.

- If the vehicle is equipped with a wheel and tire without TPMS.
- If the TPMS has been replaced and the ID has not been registered.
- If the wheel is not originally specified by INFINITI.

FCC Notice:

For USA:

This device complies with Part 15 of the FCC Rules. Operation is subject to the following two conditions: (1) This device may not cause harmful interference, and (2) this device must accept any interference received, including interference that may cause undesired operation.

Note: Changes or modifications not expressly approved by the party responsible for compliance could void the user's authority to operate the equipment.

For Canada:

This device complies with Industry Canada licence-exempt RSS standard(s). Operation is subject to the following two conditions: (1) this device may not cause interference, and (2) this device must accept any interference, including interference that may cause undesired operation of the device

TPMS with Tire Inflation Indicator

When adding air to an under-inflated tire, the TPMS with Tire Inflation Indicator provides visual and audible signals outside the vehicle to help you inflate the tires to the recommended COLD tire pressure.

Vehicle set-up:

1. Park the vehicle in a safe and level place.
2. Apply the parking brake and place the shift lever into the P (Park) position.
3. Place the ignition switch to the ON position. Do not start the engine.

Operation:

1. Add air to the tire.
2. After a few seconds, the hazard indicators will start flashing.
3. When the designated pressure is reached, the horn beeps once and the hazard indicators stop flashing.
4. Perform the above steps for each tire.
   - If the tire is over-inflated more than approximately 4 psi (30 kPa), the horn beeps and the hazard indicators flash three times. To correct the pressure, push the core of the valve stem on the tire briefly to release pressure. When the pressure reaches the designated pressure, the horn beeps once.
   - If the hazard indicator does not flash within approximately 15 seconds after starting to inflate the tire, it indicates that the TPMS with Tire Inflation Indicator is not operating.
   - The TPMS will not activate the TPMS with Tire Inflation Indicator under the following conditions:
     - If there is interference from an external device or transmitter.
     - The air pressure from the inflation device is not sufficient to inflate the tire.
     - There is a malfunction in the TPMS system.
     - There is a malfunction in the horn or hazard indicators.
     - The identification code of the tire pressure sensor is not registered to the system.
     - The battery of the tire pressure sensor is low.
   - If the TPMS with Tire Inflation Indicator does not operate due to TPMS interference, move the vehicle about 3 ft (1 m) backward or forward and try again.

If the TPMS with Tire Inflation Indicator is not working, use a tire pressure gauge.

ON-PAVEMENT AND OFF-ROAD DRIVING PRECAUTIONS

Utility vehicles have a significantly higher rollover rate than other types of vehicles.

They have higher ground clearance than passenger cars to make them capable of performing in a variety of on-pavement and off-road applications. This gives them a higher center of gravity than ordinary vehicles. An advantage of higher ground clearance is a better view of the road, allowing you to anticipate problems. However, they are not designed for cornering at the same speeds as conventional 2-wheel drive vehicles any more than low-slung sports cars are designed to perform satisfactorily under off-road conditions. If at all possible, avoid sharp turns at high speeds. As with other vehicles of this type, failure to operate this vehicle correctly may result in loss of control or vehicle rollover. In a rollover crash, an unbelted person is significantly more likely to die than a person wearing a seat belt.

For additional information, refer to “Driving safety precautions” in this section.

AVOIDING COLLISION AND ROLLOVER

⚠WARNING

Failure to operate this vehicle in a safe and prudent manner may result in loss of control or an accident.

Be alert and drive defensively at all times. Obey all traffic regulations. Avoid excessive speed, high speed cornering, or sudden steering maneuvers, because these driving practices could cause you to lose control of your vehicle.

As with any vehicle, loss of control could result in a collision with other vehicles or objects or cause the vehicle to roll over, particularly if the loss of control causes the vehicle to slide sideways.

Be attentive at all times, and avoid driving when tired. Never drive when under the influence of alcohol or drugs (including prescription or over-the-counter drugs which may cause drowsiness). Always wear your seat belt as outlined in the “Safety – Seats, seat belts and supplemental restraint system” section of this manual, and also instruct your passengers to do so.

Seat belts help reduce the risk of injury in collisions and rollovers. **In a rollover crash, an unbelted or improperly belted person is significantly more likely to be injured or killed than a person properly wearing a seat belt.**

OFF-ROAD RECOVERY

While driving, the right side or left side wheels may unintentionally leave the road surface. If this occurs, maintain control of the vehicle by following the procedure below. Please note that this procedure is only a general guide. The vehicle must be driven as appropriate based on the conditions of the vehicle, road and traffic.

1. Remain calm and do not overreact.
2. Do not apply the brakes.
3. Maintain a firm grip on the steering wheel with both hands and try to hold a straight course.
4. When appropriate, slowly release the accelerator pedal to gradually slow the vehicle.
5. If there is nothing in the way, steer the vehicle to follow the road while vehicle speed is reduced. Do not attempt to drive the vehicle back onto the road surface until vehicle speed is reduced.

6. When it is safe to do so, gradually turn the steering wheel until both tires return to the road surface. When all tires are on the road surface, steer the vehicle to stay in the appropriate driving lane.

- If you decide that it is not safe to return the vehicle to the road surface based on vehicle, road or traffic conditions, gradually slow the vehicle to a stop in a safe place off the road.

RAPID AIR PRESSURE LOSS

Rapid air pressure loss or a "blow-out" can occur if the tire is punctured or is damaged due to hitting a curb or pothole. Rapid air pressure loss can also be caused by driving on under-inflated tires.

Rapid air pressure loss can affect the handling and stability of the vehicle, especially at highway speeds.

Help prevent rapid air pressure loss by maintaining the correct air pressure and visually inspect the tires for wear and damage. For additional information, refer to "Wheels and tires" in the "Maintenance and do-it-yourself" section of this manual. If a tire rapidly loses air pressure or "blows-out" while driving, maintain control of the vehicle by following the procedure below. Please note that this procedure is only a general guide. The vehicle must be driven as appropriate based on the conditions of the vehicle, road and traffic.

⚠ WARNING

The following actions can increase the chance of losing control of the vehicle if there is a sudden loss of tire air pressure. Losing control of the vehicle may cause a collision and result in personal injury.

- **The vehicle generally moves or pulls in the direction of the flat tire.**
- **Do not rapidly apply the brakes.**
- **Do not rapidly release the accelerator pedal.**
- **Do not rapidly turn the steering wheel.**

1. Remain calm and do not overreact.
2. Maintain a firm grip on the steering wheel with both hands and try to hold a straight course.
3. When appropriate, slowly release the accelerator pedal to gradually slow the vehicle.
4. Gradually steer the vehicle to a safe location off the road and away from traffic if possible.
5. Lightly apply the brake pedal to gradually stop the vehicle.
6. Turn on the hazard warning flashers and contact a roadside emergency service to change the tire. For additional information, refer to "Changing a flat tire" in the "In case of emergency" section of this manual.

DRINKING ALCOHOL/DRUGS AND DRIVING

⚠ WARNING

Never drive under the influence of alcohol or drugs. Alcohol in the bloodstream reduces coordination, delays reaction time and impairs judgement. Driving after drinking alcohol increases the likelihood of being involved in an accident injuring yourself and others. Additionally, if you are injured in an accident, alcohol can increase the severity of the injury.

INFINITI is committed to safe driving. However, you must choose not to drive under the influence of alcohol. Every year thousands of people are injured or killed in alcohol-related accidents. Although the local laws vary on what is considered to be legally intoxicated, the fact is that alcohol affects all people differently and most people underestimate the effects of alcohol.

Remember, drinking and driving don't mix! And that is true for drugs, too (over-the-counter, prescription, and illegal drugs). Don't drive if your ability to operate your vehicle is impaired by alcohol, drugs, or some other physical condition.

DRIVING SAFETY PRECAUTIONS

Your INFINITI is designed for both normal and off-road use. However, avoid driving in deep water or mud as your INFINITI is mainly designed for leisure use, unlike a conventional off-road vehicle.

Remember that 2-wheel drive models are less capable than all-wheel drive (AWD) models for rough road driving and extrication when stuck in deep snow or mud, or the like.

Please observe the following precautions:

⚠ WARNING

- **Spinning the front wheels on slippery surface may cause the AWD warning message to display and the AWD system to automatically switch from the AWD to the 2WD mode. This could reduce the traction. Be especially careful when towing a trailer. (AWD models)**
- **Drive carefully when off the road and avoid dangerous areas. Every person who drives or rides in this vehicle should be seated with their seat belt fastened. This will keep you and your passengers in position when driving over rough terrain.**
- **Do not drive across steep slopes. Instead drive either straight up or straight down the slopes. Off-road vehicles can tip over sideways much more easily than they can forward or backward.**
- **Many hills are too steep for any vehicle. If you drive up them, you may stall. If you drive down them, you may not be able to control your speed. If you drive across them, you may roll over.**
- **Do not shift gears while driving on downhill grades as this could cause loss of control of the vehicle.**
- **Stay alert when driving to the top of a hill. At the top there could be a drop-off or other hazard that could cause an accident.**
- **If your engine stalls or you cannot make it to the top of a steep hill, never attempt to turn around. Your vehicle could tip or roll over. Always back straight down in R (Reverse) gear and apply brakes to control your speed.**
- **Heavy braking going down a hill could cause your brakes to overheat and fade, resulting in loss of control and an accident. Apply brakes lightly and use a low gear to control your speed.**
- **Unsecured cargo can be thrown around when driving over rough terrain. Properly secure all cargo so it will not be thrown forward and cause injury to you or your passengers.**
- **Secure heavy loads in the cargo area as far forward and as low as possible. Do not equip the vehicle with tires larger than specified in this manual. This could cause your vehicle to roll over.**
- **Do not grip the inside or spokes of the steering wheel when driving off-road. The steering wheel could move suddenly and injure your hands. Instead drive with your fingers and thumbs on the outside of the rim.**
- **Before operating the vehicle, ensure that the driver and all passengers have their seat belts fastened.**
- **Always drive with the floor mats in place as the floor may become hot.**
- **Lower your speed when encountering strong crosswinds. With a higher center of gravity, your INFINITI is more affected by strong side winds. Slower speeds ensure better vehicle control.**

- **Do not drive beyond the performance capability of the tires, even with AWD engaged.**
- **For AWD equipped vehicles, do not attempt to raise two wheels off the ground and shift the transmission to any drive or reverse position with the engine running. Doing so may result in drivetrain damage or unexpected vehicle movement which could result in serious vehicle damage or personal injury.**
- **Do not attempt to test an AWD equipped vehicle on a 2-wheel dynamometer (such as the dynamometers used by some states for emissions testing), or similar equipment even if the other two wheels are raised off the ground. Make sure you inform test facility personnel that your vehicle is equipped with AWD before it is placed on a dynamometer. Using the wrong test equipment may result in drivetrain damage or unexpected vehicle movement which could result in serious vehicle damage or personal injury.**
- **When a wheel is off the ground due to an unlevel surface, do not spin the wheel excessively.**
- **Accelerating quickly, sharp steering maneuvers or sudden braking may cause loss of control.**
- **If at all possible, avoid sharp turning maneuvers, particularly at high speeds. Your INFINITI vehicle has a higher center of gravity than a passenger car. The vehicle is not designed for cornering at the same speeds as passenger cars. Failure to operate this vehicle correctly could result in loss of control and/or a rollover accident.**
- **Always use tires of the same type, size, brand, construction (bias, bias-belted, or radial), and tread pattern on all four wheels. Install tire chains on the front wheels when driving on slippery roads and drive carefully.**
- **Be sure to check the brakes immediately after driving in mud or water. For additional information, refer to "Brake system" in this section for "Wet brakes".**
- **Avoid parking your vehicle on steep hills. If you get out of the vehicle and it rolls forward, backward or sideways, you could be injured.**
- **Whenever you drive off-road through sand, mud or water as deep as the wheel hub, more frequent maintenance may be required. For additional information, refer to "Periodic maintenance" in the "INFINITI Service and Maintenance Guide."**

INTELLIGENT ALL-WHEEL DRIVE (AWD) DRIVING SAFETY PRECAUTIONS (if so equipped)

⚠ WARNING

- **Replacing tires with those not originally specified by INFINITI could affect the proper operation of the TPMS.**
- **Always use tires of the same type, size, brand, construction (bias, bias-belted or radial), and tread pattern on all four wheels. Install tire chains on the front wheels when driving on slippery roads and drive carefully.**
- **This vehicle is not designed for offroad (rough road) use. Do not drive on sandy or muddy roads that tires may get stuck in.**

- **For AWD equipped vehicles, do not attempt to raise two wheels off the ground and shift the transmission to any D (Drive) or R (Reverse) position with the engine running. Doing so may result in drivetrain damage or unexpected vehicle movement which could result in serious vehicle damage or personal injury.**
- **Do not attempt to test an AWD equipped vehicle on a 2-wheel dynamometer, (such as the dynamometers used by some states for emissions testing), or similar equipment even if the other two wheels are raised off the ground. Make sure you inform test facility personnel that your vehicle is equipped with AWD before it is placed on a dynamometer. Using the wrong test equipment may result in drivetrain damage or unexpected vehicle movement which could result in serious vehicle damage or personal injury.**
- **When a wheel is off the ground due to an unlevel surface, do not spin the wheel excessively.**

⚠ WARNING

Do not operate the push-button ignition switch while driving the vehicle except in an emergency. (The engine will stop when the ignition switch is pushed three consecutive times in quick succession or the ignition switch is pushed and held for more than 2 seconds.) If the engine stops while the vehicle is being driven, this could lead to a crash and serious injury.

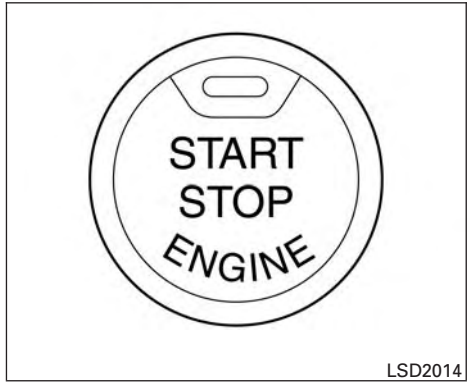

When the ignition switch is pushed without depressing the brake pedal, the ignition switch will illuminate.

Push the ignition switch center:

- Once to change to ACC.
- Two times to change to ON.
- Three times to return to OFF.

The ignition switch will automatically return to the LOCK position when any door is either opened or closed with the switch in the OFF position.

The ignition lock is designed so that the ignition switch position cannot be switched to OFF until the shift lever is moved to the P (Park) position.

When the ignition switch cannot be pushed toward the OFF position, proceed as follows:

1. Move the shift lever into the P (Park) position.
2. Push the ignition switch. The ignition switch position will change to the ON position.
3. Push the ignition switch again to the OFF position.

The shift lever can be moved from the P (Park) position if the ignition switch is in the ON position and the brake pedal is depressed.

If the battery of the vehicle is discharged, the push-button ignition switch cannot be moved from the LOCK position.

Some indicators and warnings for operation are displayed on the vehicle information display. For additional information, refer to “Vehicle information display” in the “Instruments and controls” section of this manual.

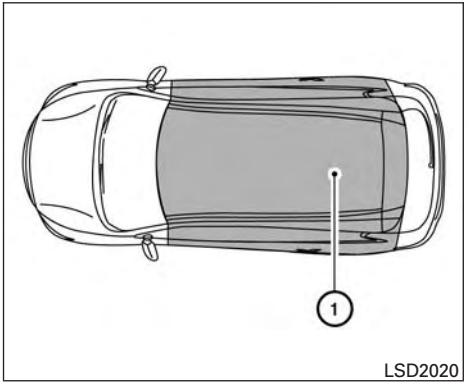

OPERATING RANGE

The Intelligent Key functions can only be used when the Intelligent Key is within the specified operating range.

When the Intelligent Key battery is almost discharged or strong radio waves are present near the operating location, the Intelligent Key system’s operating range becomes narrower and may not function properly.

If the Intelligent Key is within the operating range, it is possible for anyone, even someone who does not carry the Intelligent Key, to push the ignition switch to start the engine.

The operating range of the engine start function is inside of the vehicle ①.

- The luggage area is not included in the operating range, but the Intelligent Key may function.
- If the Intelligent Key is placed on the instrument panel, inside the glove box, storage bin or door pocket, the Intelligent Key may not function.
- If the Intelligent Key is placed near the door or window outside the vehicle, the Intelligent Key may function.

PUSH-BUTTON IGNITION SWITCH POSITIONS

LOCK (Normal parking position)

The ignition switch can only be locked in this position.

The ignition switch will be unlocked when it is pushed to the ACC position while carrying the Intelligent Key.

The ignition switch will lock when any door is opened or closed with the ignition switched off.

ACC (Accessories)

This position activates electrical accessories, such as the radio, when the engine is not running.

ACC has a battery saver feature that will turn the ignition switch to the OFF position after a period of time under the following conditions:

- All doors are closed.
- Shift lever is in P (Park).

The battery saver feature will be cancelled if any of the following occur:

- Any door is opened.
- Shift lever is moved out of P (Park).
- Ignition switch changes position.

ON (Normal operating position)

This position turns on the ignition system and electrical accessories.

ON has a battery saver feature that will turn the ignition switch to the OFF position, if the vehicle is not running, after some time under the following conditions:

- All doors are closed.
- Shift lever is in P (Park).

The battery saver feature will be cancelled if any of the following occur:

- Any door is opened.
- Shift lever is moved out of the P (Park) position.
- Ignition switch changes position.

⚠ CAUTION

Do not leave the vehicle with the ignition switch in ACC or ON positions when the engine is not running for an extended period. This can discharge the battery.

OFF

The ignition switch is in the OFF position when the engine is turned off using the ignition switch. No lights will illuminate on the ignition switch.

EMERGENCY ENGINE SHUT OFF

To shut off the engine in an emergency situation while driving, perform the following procedure:

– Rapidly push the push-button ignition switch three consecutive times in less than 1.5 seconds, or

– Push and hold the push-button ignition switch for more than 2 seconds.

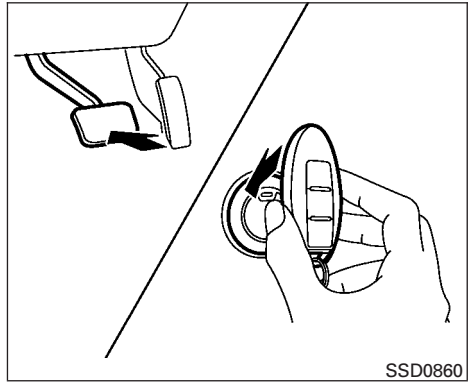

INFINITI INTELLIGENT KEY BATTERY DISCHARGE

If the battery of the Intelligent Key is discharged, or environmental conditions interfere with the Intelligent Key operation, start the engine according to the following procedure:

1. Place the shift lever in the P (Park) position.
2. Firmly apply the foot brake.
3. Touch the ignition switch with the Intelligent Key as illustrated. (A chime will sound.)

4. Push the ignition switch while depressing the brake pedal within 10 seconds after the chime sounds. The engine will start.

After Step 3 is performed, when the ignition switch is pushed without depressing the brake pedal, the ignition switch position will change to ACC.

NOTE:

- When the ignition switch is pushed to the ACC or ON position or the engine is started by the above procedure, the Intelligent Key battery discharge indicator appears in the vehicle information display even when the Intelligent Key is inside the vehicle. This is not a malfunction. To turn off the Intelligent Key battery discharge indicator, touch the ignition switch with the Intelligent Key again.
- If the Intelligent Key battery discharge indicator appears, replace the battery as soon as possible. For additional information, refer to “Battery replacement” in the “Maintenance and do-it-yourself” section of this manual.

INFINITI VEHICLE IMMOBILIZER SYSTEM

The INFINITI Vehicle Immobilizer System will not allow the engine to start without the use of the registered key.

If the engine fails to start using the registered key, it may be due to interference caused by another registered key, an automated toll road device or automated payment device on the key ring. Restart the engine using the following procedures:

1. Leave the ignition switch in the ON position for approximately 5 seconds.
2. Turn the ignition switch to the OFF or LOCK position and wait approximately 5 seconds.
3. Repeat Step 1 and 2 again.
4. Restart the engine while holding the device (which may have caused the interference) separate from the registered key.

If the no start condition re-occurs, INFINITI recommends placing the registered key on a separate key ring to avoid interference from other devices.

- Make sure the area around the vehicle is clear.
- Check fluid levels such as engine oil, coolant, brake fluid, and windshield-washer fluid as frequently as possible, or at least whenever you refuel.
- Check that all windows and lights are clean.
- Visually inspect tires for their appearance and condition. Also check tires for proper inflation.
- Check that all doors are closed.
- Position seat and adjust head restraints/headrests.
- Adjust inside and outside mirrors.
- Fasten seat belts and ask all passengers to do likewise.
- Check the operation of warning lights when the ignition switch is placed in the ON position. For additional information, refer to “Warning lights, indicator lights and audible reminders” in the “Instruments and controls” section of this manual.

1. Apply the parking brake.
2. Move the shift lever to P (Park) or N (Neutral). P (Park) is recommended.

   The starter is designed not to operate if the shift lever is in any of the driving positions.
3. Push the ignition switch to the ON position. Depress the brake pedal and push the ignition switch to start the engine.

   To start the engine immediately, push and release the ignition switch while depressing the brake pedal with the ignition switch in any position.

   - If the engine is very hard to start in extremely cold weather or when restarting, depress the accelerator pedal a little (approximately 1/3 to the floor) and while holding, crank the engine. Release the accelerator pedal when the engine starts.
   - If the engine is very hard to start because it is flooded, depress the accelerator pedal all the way to the floor and hold it. Push the ignition switch to the ON position to start cranking the engine. After 5 or 6 seconds, stop cranking by pushing the ignition switch to LOCK. After cranking the engine, release the accelerator pedal. Crank the engine with your foot off the accelerator pedal by depressing the brake pedal and pushing the push-button ignition switch to start the engine. If the engine starts, but fails to run, repeat the above procedure.

⚠ CAUTION

Do not operate the starter for more than 15 seconds at a time. If the engine does not start, push the ignition switch to the OFF position and wait 10 seconds before cranking again, otherwise the starter could be damaged.

4. **Warm-up**

   Allow the engine to idle for at least 30 seconds after starting. Do not race the engine while warming it up. Drive at moderate speed for a short distance first, especially in cold weather. In cold weather, keep the engine running for a minimum of 2 - 3 minutes before shutting it off. Starting and stopping the engine over a short period of time may make the vehicle more difficult to start.
5. To stop the engine, place the shift lever into the P (Park) position and push the ignition switch to the OFF position.

NOTE:

Care should be taken to avoid situations that can lead to potential battery discharge and potential no-start conditions such as:

1. Installation or extended use of electronic accessories that consume battery power when the engine is not running (Phone chargers, GPS, DVD players, etc.)
2. Vehicle is not driven regularly and/or only driven short distances. In these cases, the battery may need to be charged to maintain battery health.

REMOTE START (if so equipped)

Vehicles started with the remote start require the ignition switch to be placed in the ON position before the shift lever can be moved from the P (Park) position. To place the ignition switch to the ON position, follow the steps:

1. Make sure that the Intelligent Key is on you.
2. Apply the brake.
3. Press the ignition switch once to the ON position.

For additional information, refer to “INFINITI Intelligent Key” in the “Pre-driving checks and adjustments” section of this manual.

CONTINUOUSLY VARIABLE TRANSMISSION (CVT)

⚠ WARNING

- **Do not depress the accelerator pedal while shifting from P (Park) or N (Neutral) to R (Reverse), D (Drive), or M (Manual shift mode). Always depress the brake pedal until shifting is completed. Failure to do so could cause you to lose control and have an accident.**
- **Cold engine idle speed is high, so use caution when shifting into a forward or reverse gear before the engine has warmed up.**
- **Do not downshift abruptly on slippery roads. this may cause a loss of control.**
- **Never shift to either the P (Park) or R (Reverse) position while the vehicle is moving forward and P (Park) or D (Drive) position while the vehicle is reversing. This could cause an accident or damage the transmission.**
- **Except in an emergency, do not shift to the N (Neutral) position while driving. Coasting with the transmission in the N (Neutral) position may cause serious damage to the transmission.**

⚠ CAUTION

When stopping the vehicle on an uphill grade, do not hold the vehicle by depressing the accelerator pedal. The foot brake should be used for this purpose.

The CVT in your vehicle is electronically controlled to produce maximum power and smooth operation.

The recommended operating procedures for this transmission are shown on the following pages. Follow these procedures for maximum vehicle performance and driving enjoyment.

Engine power may be automatically reduced to protect the CVT if the engine speed increases quickly when driving on slippery roads or while being tested on some dynamometers.

Starting the vehicle

1. After starting the engine, fully depress the foot brake pedal before moving the shift lever out of the P (Park) position.
   This CVT is designed so that the foot brake pedal must be depressed before shifting from P (Park) to any driving position while the ignition switch is in the ON position.
   The shift lever cannot be moved out of the P (Park) position and into any of the other positions if the ignition switch is placed in the LOCK, OFF or ACC position while the ready light illuminates.
2. Keep the foot brake pedal depressed and move the shift lever to a driving position.
3. Release the parking brake and foot brake pedal and then gradually start the vehicle in motion.

⚠ WARNING

- **Do not depress the accelerator pedal while shifting from P (Park) or N (Neutral) to R (Reverse) or D (Drive) position. Always depress the brake pedal until shifting is completed. Failure to do so could cause you to lose control and have an accident.**
- **Cold engine idle speed is high, so use caution when shifting into a forward or reverse gear before the engine has warmed up.**

- **Never shift to either the P (Park) or R (Reverse) position while the vehicle is moving forward and P (Park) or D (Drive) position while the vehicle is reversing. This could cause an accident or damage the transmission.**

⚠ CAUTION

- **When stopping the vehicle on an uphill grade, do not hold the vehicle by depressing the accelerator pedal. The foot brake should be used for this purpose.**
- **Do not downshift abruptly on slippery roads. This may cause a loss of control.**
- **Except in an emergency, do not shift to the N (Neutral) position while driving. Coasting with the transmission in the N (Neutral) position may cause serious damage to the transmission.**

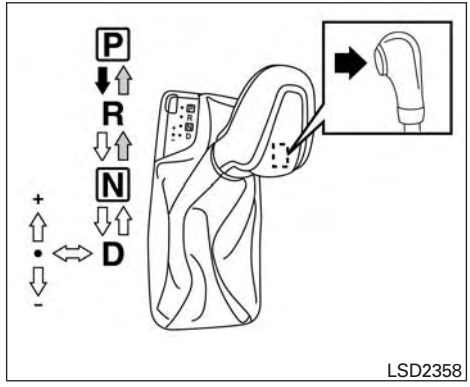

Shifting

Push the button while depressing the brake pedal

Push the button to shift

Shift without pushing button

After starting the engine, fully depress the brake pedal, push the shift lever button and move the shift lever from the P (Park) position to any of the desired shift positions.

⚠ WARNING

Apply the parking brake if the shift lever is in any position while the engine is not running. Failure to do so could cause the vehicle to move unexpectedly or roll away and result in serious personal injury or property damage.

⚠ CAUTION

Use the P (Park) or R (Reverse) position only when the vehicle is completely stopped.

P (Park)

⚠ CAUTION

To prevent transmission damage, use the P (Park) position only when the vehicle is completely stopped

Use the P (Park) shift lever position when the vehicle is parked or when starting the engine. Make sure the vehicle is completely stopped. **The brake pedal must be depressed and the shift lever button pushed in to move the shift lever from N (Neutral) or any drive position to P (Park).** Apply the parking brake. When parking on a hill, apply the parking brake first, then move the shift lever into the P (Park) position.

R (Reverse)

⚠CAUTION

To prevent transmission damage, use the R (Reverse) position only when the vehicle is completely stopped.

Use the R (Reverse) position to back up. Make sure the vehicle is completely stopped before selecting the R (Reverse) position. **The brake pedal must be depressed and the shift lever button pushed in to move the shift lever from P (Park), N (Neutral) or any drive position to R (Reverse).**

N (Neutral)

Neither forward nor reverse gear is engaged. The engine can be started in this position. You may shift to N (Neutral) and restart a stalled engine while the vehicle is moving.

D (Drive)

Use this position for all normal forward driving.

Manual shift mode

When the shift lever is in the manual shift gate, the transmission is ready for the manual shift mode. Shift ranges can be selected manually by moving the shift lever up or down. To cancel manual shift mode, return the shift lever to the D (Drive) position. The transmission returns to automatic driving mode.

When the shift lever is shifted from D (Drive) to the manual shift gate with the vehicle stopped or while driving, the transmission enters the manual shift mode. Shift ranges can be selected manually. In the manual shift mode, the shift range is displayed on the position indicator in the meter. When shifting the shift lever to the manual shift gate, the position indicator displays 1 (1st) up to 7 (7th) depending on vehicle speed.

Shift ranges up or down one by one as follows:

1⇔ 2 ⇔ 3 ⇔ 4 ⇔ 5 ⇔ 6 ⇔ 7

7 (7th)

Use this position for all normal forward driving at highway speeds.

6 (6th) and 5 (5th)

Use this position when driving up long slopes, or for engine braking when driving down long slopes.

4 (4th), 3 (3rd) and 2 (2nd)

Use these positions for hill climbing or engine braking on downhill grades.

1 (1st)

Use this position when climbing steep hills slowly or when driving slowly, or for maximum engine braking on steep downhill grades.

- Remember not to drive at high speeds for extended periods of time in lower than 7th gear. This reduces fuel economy.

When shifting up

Move the shift lever to the + (up) side. (Shifts to higher range.)

When shifting down

Move the shift lever to the − (down) side. (Shifts to lower range.)

- The transmission will automatically downshift the gears. (For example, if you select the 3rd range, the transmission will shift down between the 3rd and 1st gears.)
- Moving the shift lever rapidly to the same side twice will shift the ranges in succession.

When canceling the manual shift mode

Return the shift lever to the D (Drive) position to return the transmission to the normal driving mode.

- **In the manual shift mode, the transmission may not shift to the selected gear. This helps maintain driving performance and reduces the chance of vehicle damage or loss of control.**
- **When this situation occurs, the CVT position indicator light will blink and the chime will sound.**
- **In the manual shift mode, the transmission may shift up automatically to a higher range than selected if the engine speed is too high. When the vehicle speed decreases, the transmission automatically shifts down and shifts to 1st gear before the vehicle comes to a stop.**
- CVT operation is limited to automatic drive mode when CVT fluid temperature is extremely low even if manual shift mode is selected. This is not a malfunction. When CVT fluid warms up, manual mode can be selected.
- When the CVT fluid temperature is high, the shift range may upshift in lower rpm than usual. This is not a malfunction.

Shift lock release

If the battery charge is low or discharged, the shift lever may not be moved from the P (Park) position even with the brake pedal depressed and the shift lever button pushed. To move the shift lever, perform the following procedure:

1. Push the ignition switch to the OFF or LOCK position.
2. Apply the parking brake.
3. Remove the shift lock release cover using a suitable tool.
4. Push down the shift lock release using a suitable tool.
5. Push the shift lever button and move the shift lever to the N (Neutral) position while holding down the shift lock release. The vehicle may be moved to the desired location. Replace the removed shift lock release cover after the operation.

If the shift lever cannot be moved out of the P (Park) position, have the CVT system checked as soon as possible. It is recommended that you visit an INFINITI retailer for this service.

⚠WARNING

If the shift lever cannot be moved from the P (Park) position while the engine is running and the brake pedal is depressed, the stop lights may not work. Malfunctioning stop lights could cause an accident injuring yourself and others.

Accelerator downshift — in D (Drive) position —

For passing or hill climbing, depress the accelerator pedal to the floor. This shifts the transmission down into a lower gear, depending on the vehicle speed.

High fluid temperature protection mode

This transmission has a high fluid temperature protection mode. If the fluid temperature becomes too high (for example, when climbing steep grades in high temperatures with heavy loads, such as when towing a trailer), engine power and, under some conditions, vehicle speed will be decreased automatically to reduce the chance of transmission damage. Vehicle speed can be controlled with the accelerator pedal, but the engine and vehicle speed may be limited.

Fail-safe

When the fail-safe operation occurs, the CVT will not be shifted into the selected driving position.

If the vehicle is driven under extreme conditions, such as excessive wheel spinning and subsequent hard braking, the fail-safe system may be activated. The Malfunction Indicator Light (MIL) may come on to indicate the fail-safe mode is activated. For additional information, refer to "Malfunction Indicator Light (MIL)" in the "Instruments and controls" section of this manual. This will occur even if all electrical circuits are functioning properly. In this case, place the ignition switch in the OFF position and wait for 10 seconds. Then place the ignition switch back in the ON position. The vehicle should return to its normal operating condition. If it does not return to its normal operating condition, have the transmission checked and repaired, if necessary. It is recommended that you visit an INFINITI retailer for this service.

⚠ WARNING

When the high fluid temperature protection mode or fail-safe operation occurs, vehicle speed may be gradually reduced. The reduced speed may be lower than other traffic, which could increase the chance of a collision. Be especially careful when driving. If necessary, pull to the side of the road at a safe place and allow the transmission to return to normal operation, or have it repaired if necessary.

⚠ WARNING

- **Be sure the parking brake is fully released before driving. Failure to do so can cause brake failure and lead to an accident.**
- **Do not release the parking brake from outside the vehicle.**
- **Do not use the shift lever in place of the parking brake. When parking, be sure the parking brake is fully engaged.**
- **To help avoid risk of injury or death through unintended operation of the vehicle and /or its systems, do not leave children, people who require the assistance of others or pets unattended in your vehicle. Additionally, the temperature inside a closed vehicle on a warm day can quickly become high enough to cause a significant risk of injury or death to people and pets.**

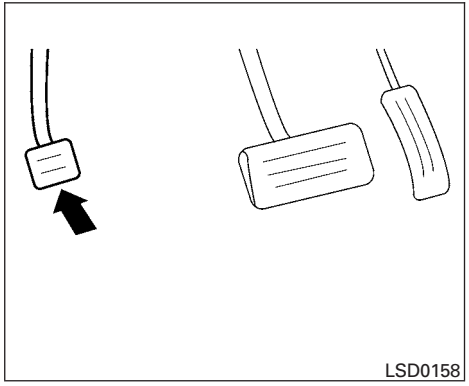

To engage: Firmly depress the parking brake.

To release:

1. Firmly apply the foot brake.
2. Move the shift lever to the P (Park) position.
3. Firmly depress the parking brake pedal and it will release.
4. Before driving, be sure the brake warning light goes out.

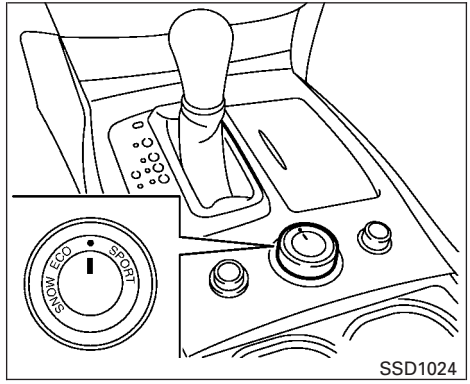

Drive mode select switch

Four driving modes can be selected by using the drive mode selector switch, STANDARD, SPORT, ECO and SNOW.

NOTE:

- When the drive mode select switch selects a mode, the mode may not switch quickly. This is not a malfunction.
- Select the STANDARD mode center for normal driving.

STANDARD MODE

STANDARD MODE is recommended for normal driving. Turn the drive mode select switch to the center position. “STANDARD” appears in the vehicle information display for 2 seconds.

SPORT MODE

The SPORT mode adjusts the engine and transmission to enhance performance. Turn the drive mode select switch to the SPORT position. “SPORT” appears in the vehicle information display for 2 seconds.

NOTE:

In the SPORT mode, fuel economy may be reduced.

SNOW MODE

SNOW mode is used on snowy roads or slippery areas. When the SNOW mode is activated, engine output is controlled to avoid wheel spin. Turn the SNOW mode off for normal driving. Turn the drive mode select switch to the SNOW position. “SNOW” appears in the vehicle information display for 2 seconds.

ECO MODE

The ECO mode adjusts the engine and transmission to enhance fuel economy.

NOTE:

Selecting this drive mode will not necessarily improve fuel economy as many driving factors influence its effectiveness.

Operation

Turn the drive mode select switch to the ECO position. “ECO” appears in the vehicle information display for 2 seconds and the ECO drive indicator light illuminates on the instrument panel.

When the accelerator pedal is depressed within the range of economy drive, the ECO drive indicator light illuminates in green. When the accelerator pedal is depressed above the range of economy drive, the color of the ECO drive indicator light changes to orange. For ECO pedal system equipped models, refer to “ECO pedal system” in this section.

The ECO drive indicator light will not illuminate in the following cases:

- When the shift lever is in the R (Reverse) position.
- When the vehicle speed is below 3 mph (4.8 km/h) or over 90 mph (144 km/h).
- When the Intelligent Cruise Control (ICC) system (if so equipped) is operated.

ECO pedal system (if so equipped)

The ECO pedal system helps assist the driver to improve fuel economy by increasing the reaction force of the accelerator pedal. When the ECO drive indicator light is blinking or turns off, the ECO pedal system increases the reaction force of the accelerator pedal.

ECO drive indicator		Illuminate or blink when
ECO	Illuminate (green)	When the pedal is depressed within range of economy drive
ECO	Blinks (green)	When the pedal is depressed likely over the range of economy drive

When the ECO drive indicator illuminates in green, the accelerator reaction force is normal. When the ECO drive indicator light is blinking or turns off, the ECO pedal system increases the reaction force of the accelerator pedal.

The ECO pedal system may not vary accelerator reaction force under the following conditions:

- When the shift lever is in the N (Neutral) or R (Reverse) position.
- When ICC (if so equipped) is being operated.

If the ECO pedal system malfunctions, it will cancel automatically. The ECO pedal system will not vary the reaction force of the accelerator pedal.

When the drive mode select switch is rotated from the ECO mode to another mode (STANDARD, SPORT or SNOW) while the ECO pedal system is operating, the ECO pedal system continues to operate until the pedal is released.

If the accelerator pedal is depressed quickly, the ECO pedal system will not increase the reaction force of the acceleration pedal. The ECO pedal system is not designed to prevent the vehicle from accelerating.

Adjusting the ECO pedal system reaction force

The ECO pedal system reaction force can be adjusted. The reaction force setting will be maintained until the setting is changed even if the engine is turned off.

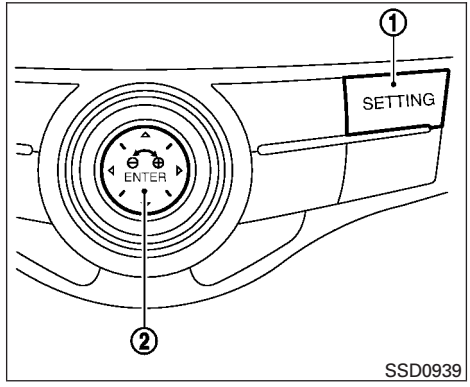

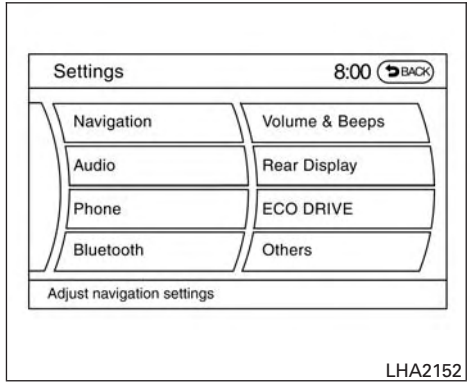

Setting ECO pedal reaction force

1. Press the SETTING ① button and select “ECO DRIVE” on the display using the INFINITI controller. Then press the ENTER ② button.
2. Select “ECO pedal” and press the ENTER ② button.

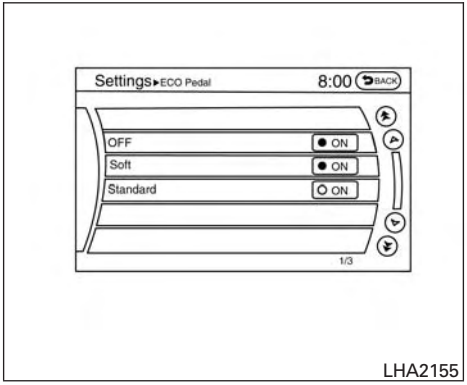

LHA2155

3. To set the reaction force of the ECO pedal system, select “Standard” or “Soft”.
4. To turn off the ECO pedal system, select “OFF”, select “ON” and press the ENTER ② button. When the ECO pedal system is turned off, the accelerator will operate normally.

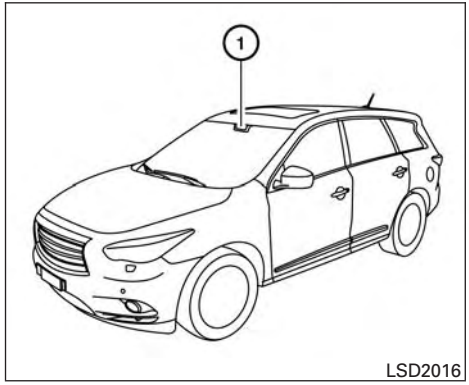

LSD2016

⚠ WARNING

Failure to follow the warnings and instructions for proper use of the LDW system could result in serious injury or death.

The LDW system will operate when the vehicle is driven at speeds of approximately 45 mph (70 km/h) and above, and only when the lane markings are clearly visible on the road.

The LDW system warns the driver with a warning light and chime that the vehicle is beginning to leave the driving lane.

The LDW system monitors the lane markers on the traveling lane using the camera unit ① located above the inside mirror. When the camera unit detects that the vehicle is traveling close to either the left or the right of the traveling lane, the LDW indicator light on the instrument panel blinks in orange and a warning chime sounds.

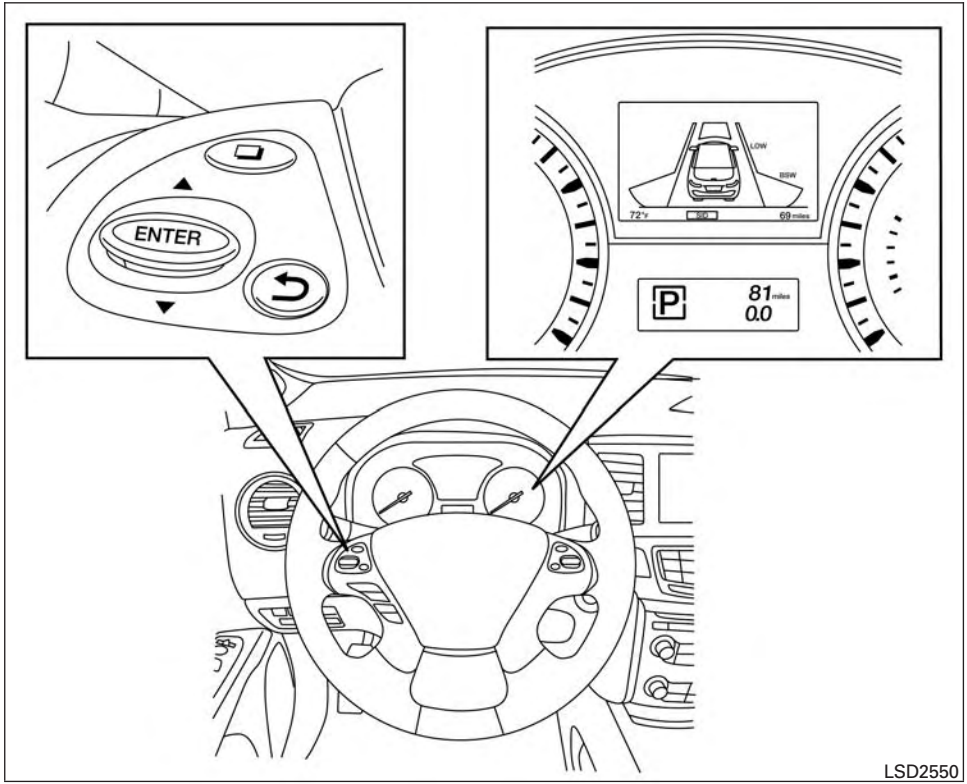

LDW SYSTEM OPERATION

The LDW system provides a lane departure warning function when the vehicle is driven at speeds of approximately 45 mph (70 km/h) and above and the lane markings are clear. When the vehicle approaches either the left or the right side of the traveling lane, a warning chime will sound and the LDW indicator light on the instrument panel will blink to alert the driver.

The warning function will stop when the vehicle returns inside of the lane markers.

The LDW system is not designed to warn under the following conditions.

- When you operate the lane change signal and change traveling lanes in the direction of the signal. (The LDW system will become operable again approximately 2 seconds after the lane change signal is turned off.)
- When the vehicle speed lowers to less than approximately 45 mph (70 km/h).
- When the BSI activates an audible warning or when the brakes are automatically applied by the system.

After the above conditions have finished and the necessary operating conditions are satisfied, the LDW functions will resume.

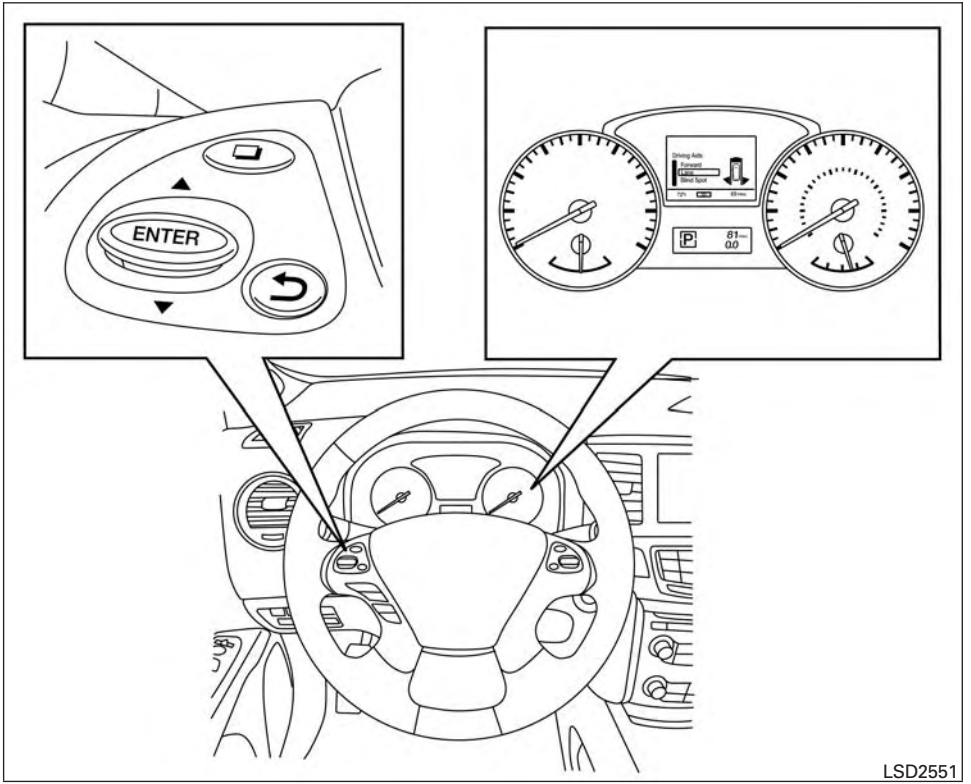

HOW TO ENABLE/DISABLE THE LDW SYSTEM

When the LDW system is enabled in the vehicle information display, the system can be turned off temporarily by pushing the warning systems switch. For additional information, refer to “Warning systems switch” in the “Instruments and controls” section of this manual.

Perform the following steps to enable or disable the LDW system.

1. Press the button until “Settings” displays in the vehicle information display. Use the button to select “Driver Assistance”. Then press the ENTER button.
2. Select “Driving Aids” and press the ENTER button.
3. To set the LDW system to on or off, use the buttons to navigate in the menu and use the ENTER button to select or change an item:
   - Select “Lane” and press the ENTER button.
   - To turn on the warning, use the ENTER button to check box for “Lane”
   - To turn on the assistance system, use the ENTER button to check box for “Assistance (LDP)”

LDW SYSTEM LIMITATIONS

⚠ WARNING

Listed below are the system limitations for the LDW system. Failure to follow the warnings and instructions for proper use of the LDW system could result in serious injury or death.

- **This system is only a warning device to inform the driver of a potential unintended lane departure. It will not steer the vehicle or prevent loss of control. It is the driver's responsibility to stay alert, drive safely, keep the vehicle in the traveling lane, and be in control of the vehicle at all times.**
- **The system will not operate at speeds below approximately 45 mph (70 km/h) or if it cannot detect lane markers.**
- **If the LDW system malfunctions, it will cancel automatically, and "Malfunction: See Owner's Manual" will appear in the vehicle information display. If "Malfunction: See Owner's Manual" appears in the vehicle information display, pull off the road to a safe location and stop the vehicle. Place shift lever to the P (Park) position and the ignition switch to the OFF position and restart the engine. If "Malfunction: See Owner's Manual" continues to appear in the vehicle information display, have the system checked. It is recommended that you visit an INFINITI retailer for this service.**
- **Excessive noise will interfere with the warning chime sound, and the chime may not be heard.**
- **Do not use the LDW system under the following conditions as it may not function properly:**
  - **During bad weather (rain, fog, snow, etc.).**
  - **When driving on slippery roads, such as on ice or snow.**
  - **When driving on winding or uneven roads.**
  - **When there is a lane closure due to road repairs.**
  - **When driving in a makeshift or temporary lane.**
  - **When driving on roads where the lane width is too narrow.**
  - **When driving without normal tire conditions (for example, tire wear, low tire pressure, installation of spare tire, tire chains, nonstandard wheels).**
  - **When the vehicle is equipped with non-original brake parts or suspension parts.**
  - **When you are towing a trailer or other vehicle.**

The system may not function properly under the following conditions:

- On roads where there are multiple parallel lane markers; lane markers that are faded or not painted clearly; yellow painted lane markers; non-standard lane markers; or lane markers covered with water, dirt, snow, etc.
- On roads where the discontinued lane markers are still detectable.
- On roads where there are sharp curves.

- On roads where there are sharply contrasting objects, such as shadows, snow, water, wheel ruts, seams or lines remaining after road repairs. (The LDW system could detect these items as lane markers.)
- On roads where the traveling lane merges or separates.
- When the vehicle's traveling direction does not align with the lane marker.
- When traveling close to the vehicle in front of you, which obstructs the lane camera unit detection range.
- When rain, snow, dirt or object adheres to the windshield in front of the lane camera unit.
- When the headlights are not bright due to dirt on the lens or if the aiming is not adjusted properly.
- When strong light enters the lane camera unit. (For example, the light directly shines on the front of the vehicle at sunrise or sunset.)
- When a sudden change in brightness occurs. (For example, when the vehicle enters or exits a tunnel or under a bridge.)

SYSTEM TEMPORARILY UNAVAILABLE

If the vehicle is parked in direct sunlight under high temperature conditions (over approximately 104°F (40°C)) and then started, the LDW system may be deactivated automatically, the warning systems ON indicator on the switch will flash and the following message will appear in the vehicle information display. - "Unavailable High Cabin Temp."

When the interior temperature is reduced, the LDW system will resume operating automatically and the warning systems ON indicator will stop flashing.

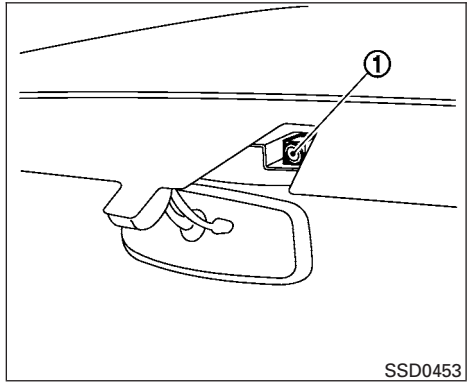

SSD0453

SYSTEM MAINTENANCE

The lane camera unit ① for the LDW system is located above the inside mirror. To keep the proper operation of the LDW systems and prevent a system malfunction, be sure to observe the following:

- Always keep the windshield clean.
- Do not attach a sticker (including transparent material) or install an accessory near the camera unit.

- Do not place reflective materials, such as white paper or a mirror, on the instrument panel. The reflection of sunlight may adversely affect the camera unit's capability of detecting the lane markers.
- Do not strike or damage the areas around the camera unit. Do not touch the camera lens or remove the screw located on the camera unit. If the camera unit is damaged due to an accident, it is recommended that you visit an INFINITI retailer.

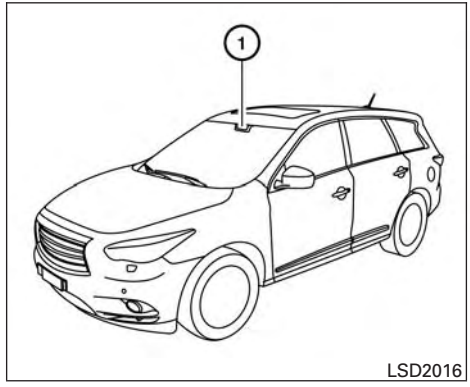

⚠ WARNING

Failure to follow the warnings and instructions for proper use of the LDP system could result in serious injury or death.

The LDP system will operate when the vehicle is driven at speeds of approximately 45 mph (70 km/h) and above, and only when the lane markings are clearly visible on the road.

The LDP system warns the driver with a warning light and chime, and helps assist the driver to return the vehicle to the center of the traveling lane by applying the brakes to the left or right wheels individually (for a short period of time).

The LDP system monitors the lane markers on the traveling lane using the camera unit ① located above the inside mirror. When the camera unit detects that the vehicle is traveling close to either the left or the right of the traveling lane, the Lane Departure Warning indicator light on the instrument panel blinks in orange and a warning chime sounds. When the LDP system is on, it will automatically apply the brakes for a short period of time, using the function of the Vehicle Dynamic Control (VDC) system.

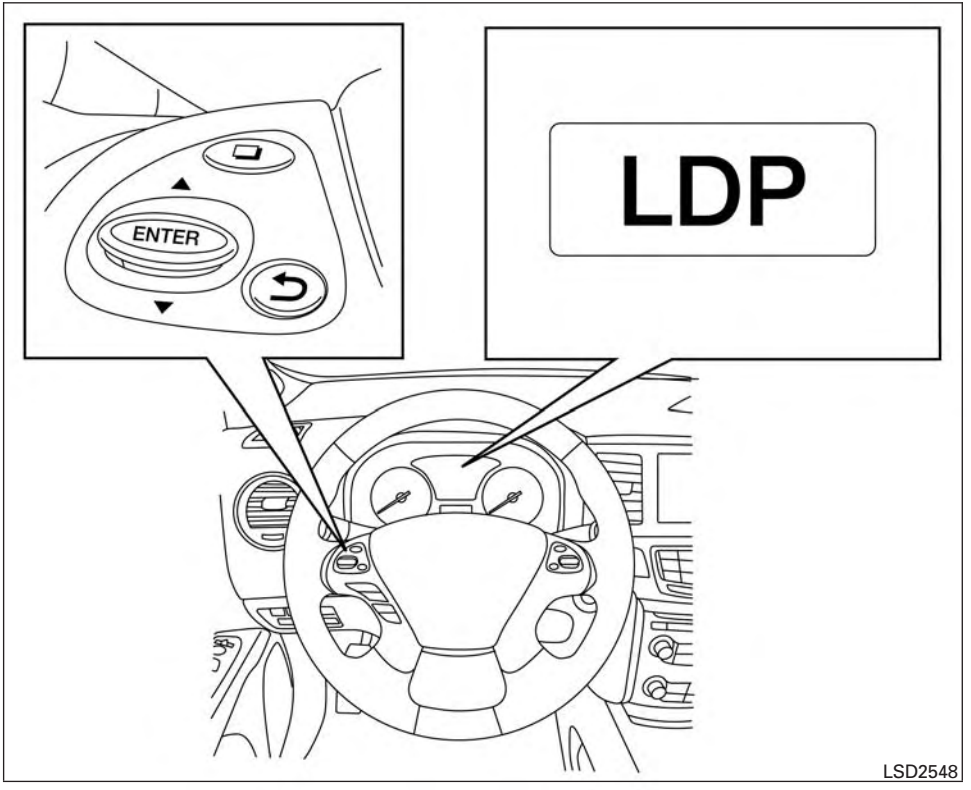

LDP SYSTEM OPERATION

The LDP system operates above approximately 45 mph (70 km/h). When the vehicle approaches either the left or the right side of the traveling lane, a warning chime will sound and the LDW indicator light (orange) on the instrument panel will blink to alert the driver. Then, the LDP system will automatically apply the brakes for a short period of time to help assist the driver to return the vehicle to the center of the traveling lane.

To turn on the LDP system, push the dynamic driver assistance switch on the steering wheel after starting the engine. The LDW indicator light (green) on the instrument panel will illuminate. Push the dynamic driver assistance switch again to turn off the LDP system. The LDW indicator light will turn off.

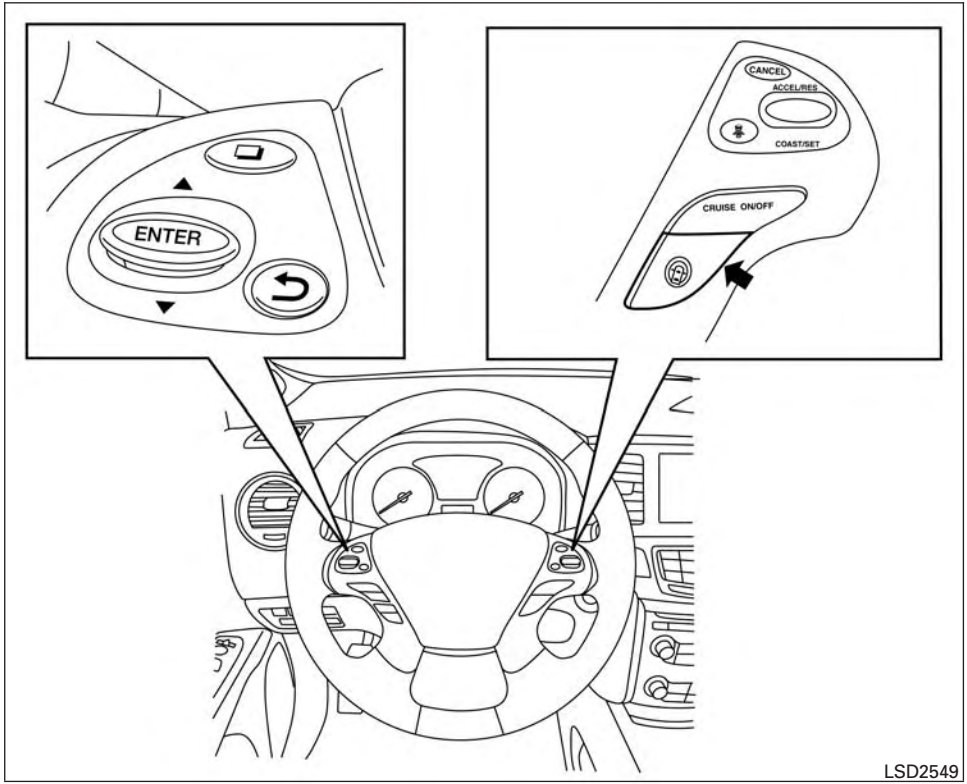

HOW TO ENABLE/DISABLE THE LDP SYSTEM

When the LDP system is enabled in the vehicle information display, the system can be turned off temporarily by pushing the warning systems switch. For additional information, refer to “Warning systems switch” in the “Instruments and controls” section of this manual.

Perform the following steps to enable or disable the LDP system.

1. Press the button until “Settings” displays in the vehicle information display. Use the button to select “Driver Assistance”. Then press the ENTER button.
2. Select “Driving Aids” and press the ENTER button.
3. To set the LDP system to on or off, use the buttons to navigate in the menu and use the ENTER button to select or change an item:
   - Select “Lane” and press the ENTER button.
   - To turn on the warning, use the ENTER button to check box for “Lane”
   - To turn on the assistance system, use the ENTER button to check box for “Assistance (LDP)”

LDP SYSTEM LIMITATIONS

⚠WARNING

Listed below are the system limitations for the LDP system. Failure to follow the warnings and instructions for proper use of the LDP system could result in serious injury or death.

- **The LDP system will not steer the vehicle or prevent loss of control. It is the driver's responsibility to stay alert, drive safely, keep the vehicle in the traveling lane, and be in control of the vehicle at all times.**
- **The LDP system is primarily intended for use on well-developed freeways or highways. It may not detect the lane markers in certain roads, weather or driving conditions.**
- **The LDP system may activate if you change lanes without first activating your turn signal or, for example, if a construction zone directs traffic to cross an existing lane marker. If this occurs you may need to apply corrective steering to complete your lane change.**
- **Because the LDP may not activate under the road, weather, and lane marker conditions described in this section, it may not activate every time your vehicle begins to leave its lane and you will need to apply corrective steering.**
- **When the LDP system is operating, avoid excessive or sudden steering maneuvers. Otherwise, you could lose control of the vehicle.**
- **The LDP system will not operate at speeds below approximately 45 mph (70 km/h) or if it cannot detect lane markers.**
- **Do not use the LDP system under the following conditions as it may not function properly:**
  - **During bad weather (rain, fog, snow, etc.).**
  - **When driving on slippery roads, such as on ice or snow.**
  - **When driving on winding or uneven roads.**
  - **When there is a lane closure due to road repairs.**
  - **When driving in a makeshift or temporary lane.**
  - **When driving on roads where the lane width is too narrow.**
  - **When driving without normal tire conditions (for example, tire wear, low tire pressure, installation of spare tire, tire chains, non-standard wheels).**
  - **When the vehicle is equipped with nonoriginal brake parts or suspension parts.**
  - **When you are towing a trailer or other vehicle.**
- **If the LDP system malfunctions, it will cancel automatically. The LDP system warning light (orange) will illuminate in the display.**
- **If LDP system warning light (orange) illuminates in the display, pull off the road to a safe location and stop the vehicle. Turn the engine off and restart the engine. If the LDP system warning light (orange) continues to illuminate, have the LDP system checked. It is recommended that you visit an INFINITI retailer for this service.**

- **Excessive noise will interfere with the warning chime sound, and the chime may not be heard.**

The LDP system may or may not operate properly under the following conditions:

- **On roads where there are multiple parallel lane markers; lane markers that are faded or not painted clearly; yellow painted lane markers; non-standard lane markers; or lane markers covered with water, dirt, snow, etc.**
- **On roads where discontinued lane markers are still detectable.**
- **On roads where there are sharp curves.**
- **On roads where there are sharply contrasting objects, such as shadows, snow, water, wheel ruts, seams or lines remaining after road repairs. (The LDP system could detect these items as lane markers.)**
- **On roads where the traveling lane merges or separates.**
- **When the vehicle's traveling direction does not align with the lane marker.**
- **When traveling close to the vehicle in front of you, which obstructs the lane camera unit detection range.**
- **When rain, snow or dirt adheres to the windshield in front of the lane camera unit.**
- **When the headlights are not bright due to dirt on the lens or if the aiming is not adjusted properly.**
- **When strong light enters the lane camera unit. (For example, the light directly shines on the front of the vehicle at sunrise or sunset.)**
- **When a sudden change in brightness occurs. (For example, when the vehicle enters or exits a tunnel or under a bridge.)**

While the LDP system is operating, you may hear a sound of brake operation. This is normal and indicates that the LDP system is operating properly.

SYSTEM TEMPORARILY UNAVAILABLE

Condition A:

The warning and assist functions of the LDP system are not designed to work under the following conditions:

- When you operate the lane change signal and change the traveling lanes in the direction of the signal. (The LDP system will be deactivated for approximately 2 seconds after the lane change signal is turned off.)
- When the vehicle speed lowers to less than approximately 45 mph (70 km/h).

After the above conditions have finished and the necessary operating conditions are satisfied, the warning and assist functions will resume.

Condition B:

The assist function of the LDP system is not designed to work under the following conditions (warning is still functional):

- When the brake pedal is depressed.
- When the steering wheel is turned as far as necessary for the vehicle to change lanes.
- When the vehicle is accelerated during LDP system operation.

- When the Intelligent Cruise Control (ICC) approach warning occurs.
- When the hazard warning flashers are operated.
- When driving on a curve at high speed.

After the above conditions have finished and the necessary operating conditions are satisfied, the LDP system application of the brakes will resume.

Condition C:

If the following messages appear in the vehicle information display, a chime will sound and the LDP system will be turned off automatically.

- "Unavailable Road is slippery":
  When the VDC system (except Traction Control System (TCS) function) or ABS operates.
- "Unavailable VDC OFF":
  When the VDC system is turned off.
- "Unavailable Snow mode active":
  When the drive mode select switch is turned to the SNOW mode.

Action to take:

When the above conditions no longer exist, turn off the LDP system. Push the dynamic driver assistance switch again to turn the LDP system back on.

Temporary disabled status at high temperature:

If the vehicle is parked in direct sunlight under high temperature conditions (over approximately 104°F (40°C)) and then the LDP system is turned on, the LDP system may be deactivated automatically and the following message will appear on the vehicle information display: "Unavailable High Cabin Temp." When the interior temperature is reduced, the system will resume operating automatically.

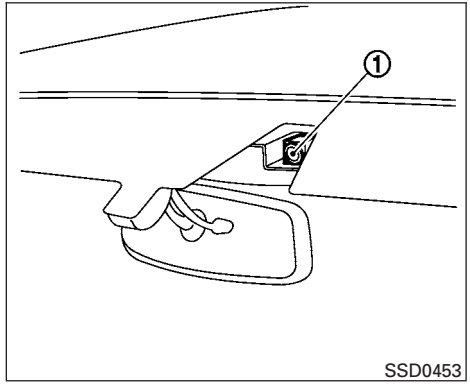

SSD0453

SYSTEM MAINTENANCE

The lane camera unit ① for the LDP system is located above the inside mirror. To keep the proper operation of the LDP systems and prevent a system malfunction, be sure to observe the following:

- Always keep the windshield clean.
- Do not attach a sticker (including transparent material) or install an accessory near the camera unit.

- Do not place reflective materials, such as white paper or a mirror, on the instrument panel. The reflection of sunlight may adversely affect the camera unit's capability of detecting the lane markers.
- Do not strike or damage the areas around the camera unit. Do not touch the camera lens or remove the screw located on the camera unit. If the camera unit is damaged due to an accident, it is recommended that you visit an INFINITI retailer.

⚠ WARNING

Failure to follow the warnings and instructions for proper use of the BSW system could result in serious injury or death.

- **The BSW system is not a replacement for proper driving procedures and is not designed to prevent contact with vehicles or objects. When changing lanes, always use the side and rear mirrors and turn and look in the direction your vehicle will move to ensure it is safe to change lanes. Never rely solely on the BSW system.**

The BSW system helps alert the driver of other vehicles in adjacent lanes when changing lanes.

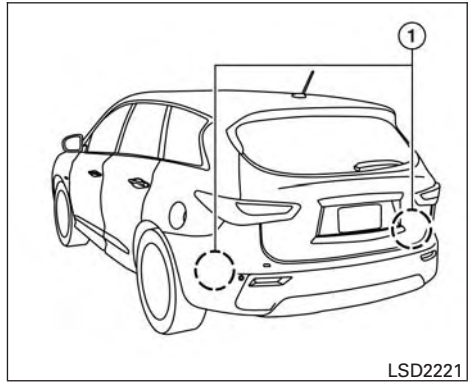

The BSW system uses radar sensors ① installed near the rear bumper to detect other vehicles in an adjacent lane.

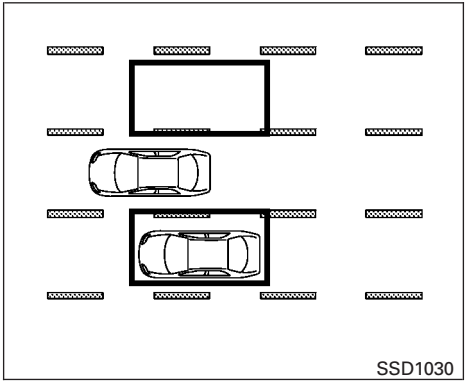

Detection zone

The radar sensors can detect vehicles on either side of your vehicle within the detection zone shown as illustrated. This detection zone starts from the outside mirror of your vehicle and extends approximately 10 ft (3.0 m) behind the rear bumper, and approximately 10 ft (3.0 m) sideways.

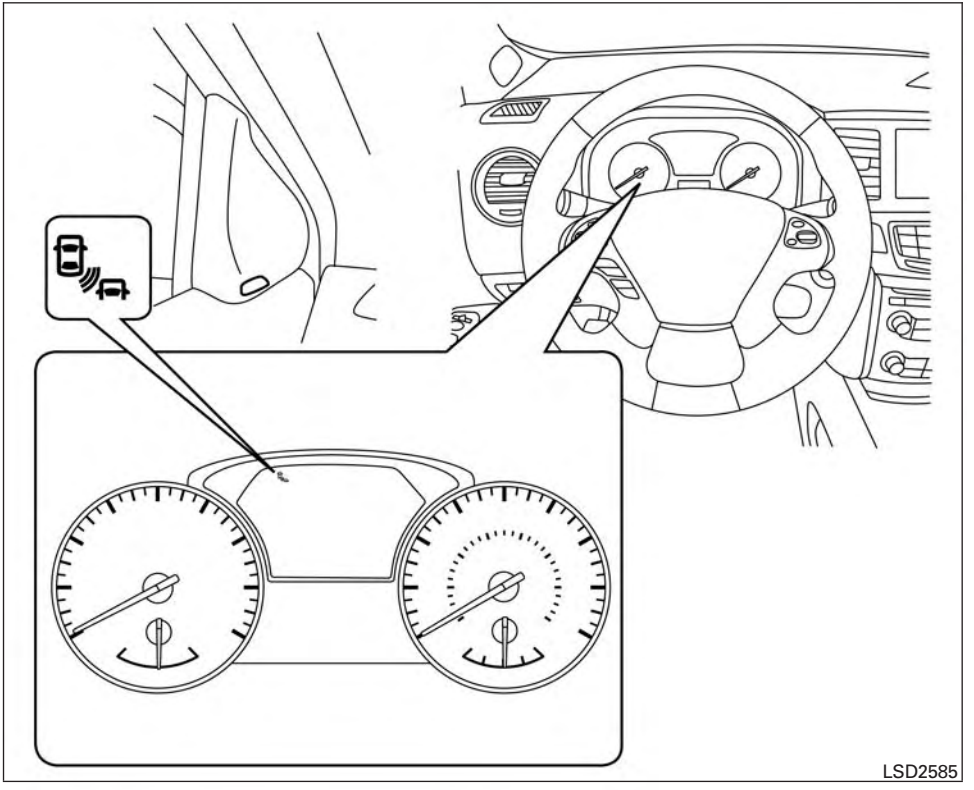

1. Side BSW/RCTA Indicator Light
2. BSW/RCTA Indicator

BSW SYSTEM OPERATION

The BSW system operates above approximately 20 mph (32 km/h).

If the radar sensors detect a vehicle in the detection zone, the side BSW/RCTA indicator light (1) illuminates. If the turn signal is then activated, the system chimes (twice) and the side BSW/RCTA indicator light flashes. The BSW indicator light continues to flash until the detected vehicle leaves the detection zone.

The side BSW/RCTA indicator light illuminates for a few seconds when the ignition switch is placed in the ON position.

The brightness of the side BSW/RCTA indicator light is adjusted automatically depending on the brightness of the ambient light.

If a vehicle comes into the detection zone after the driver activates the turn signal, then only the side BSW/RCTA indicator light flashes and no chime sounds. For additional information, refer to “BSW driving situations” in this section.

The BSW system automatically turns on every time the engine is started, as long as it is activated using the settings menu on the vehicle information display.

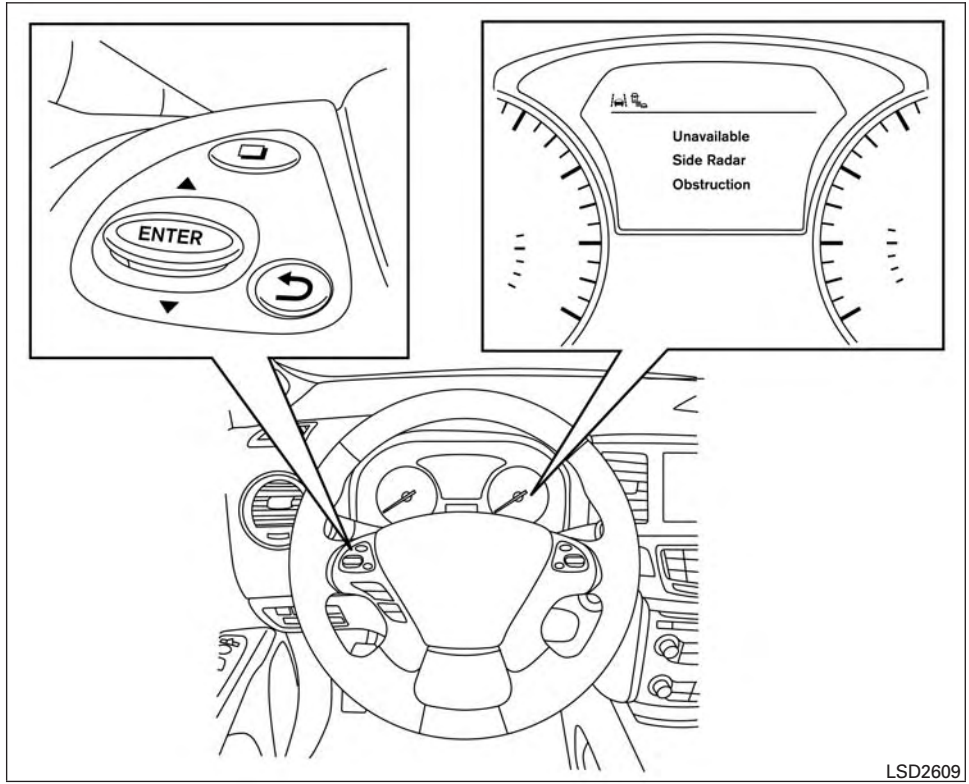

HOW TO ENABLE/DISABLE THE BSW SYSTEM

When the BSW system is enabled in the vehicle information display, the system can be turned off temporarily by pushing the warning systems switch. For additional information, refer to “Warning systems switch” in the “Instruments and controls” section of this manual.

Perform the following steps to enable or disable the BSW system.

1. Press the ❑ button until “Settings” displays in the vehicle information display and then press ENTER. Use the ▲▼ button to select “Driver Assistance”. Then press the ENTER button.
2. Select “Driving Aids” and press the ENTER button.
3. Select “Blind Spot” and press the ENTER button.
4. Select “Blind Spot” and press the ENTER button.

NOTE:

- When enabling/disabling the system, the system will retain current settings even if the engine is restarted.
- The RCTA system (if so equipped) is integrated into the BSW system. There is not a separate selection in the vehicle information display for the RCTA system. When the BSW is disabled, the RCTA system is also disabled.
- When the BSW system is turned on, the BSW/RCTA indicator (white) in the vehicle information display illuminates.

BSW SYSTEM LIMITATIONS

⚠ WARNING

Listed below are the system limitations for the BSW system. Failure to operate the vehicle in accordance with these system limitations could result in serious injury or death.

- **The BSW system cannot detect all vehicles under all conditions.**
- **The radar sensors may not be able to detect and activate BSW when certain objects are present such as:**
  - **Pedestrian, bicycles, animals.**
  - **Vehicles such as motorcycles, low height vehicles, or high ground clearance vehicles.**
  - **Oncoming vehicles.**
  - **Vehicles remaining in the detection zone when you accelerate from a stop.**
  - **A vehicle merging into an adjacent lane at a speed approximately the same as your vehicle.**
  - **A vehicle approaching rapidly from behind.**
  - **A vehicle which your vehicle overtakes rapidly.**
  - **A vehicle that passes through the detection zone quickly.**
  - **When overtaking several vehicles in a row, the vehicles after the first vehicle may not be detected if they are traveling close together.**
- **The radar sensors’ detection zone is designed based on a standard lane width. When driving in a wider lane, the radar sensors may not detect vehicles in an adjacent lane. When driving in a narrow lane, the radar sensors may detect vehicles driving two lanes away.**

- **The radar sensors are designed to ignore most stationary objects, however objects such as guardrails, walls, foliage and parked vehicles may occasionally be detected. This is a normal operation condition.**
- **The following conditions may reduce the ability of the radar to detect other vehicles:**
  - **Severe weather**
  - **Road spray**
  - **Ice/frost/snow build-up on the vehicle**
  - **Dirt build-up on the vehicle**
- **Do not attach stickers (including transparent material), install accessories or apply additional paint near the radar sensors. These conditions may reduce the ability of the radar to detect other vehicles.**
- **Excessive noise (for example, audio system volume, open vehicle window) will interfere with the chime sound, and it may not be heard.**

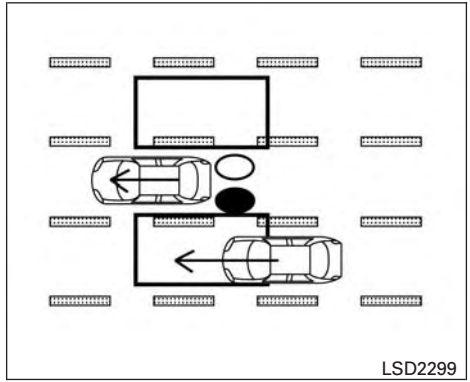

Illustration 1 – Approaching from behind

BSW DRIVING SITUATIONS

Indicator on

Indicator off

Indicator flashing

Another vehicle approaching from behind

Illustration 1: The side BSW/RCTA indicator light illuminates if a vehicle enters the detection zone from behind in an adjacent lane.

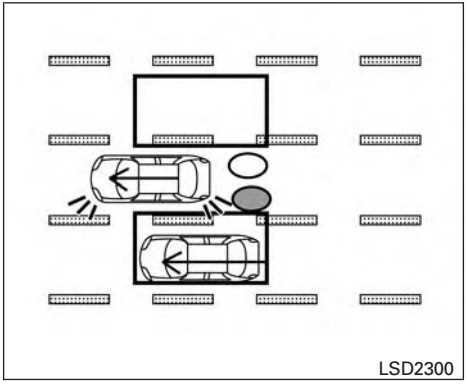

Illustration 2 – Approaching from behind

Illustration 2: If the driver activates the turn signal when another vehicle is in the detection zone, then the system chimes (twice) and the side indicator light flashes.

NOTE:

- The radar sensors may not detect vehicles which are approaching rapidly from behind.
- If the driver activates the turn signal before a vehicle enters the detection zone, the side indicator light will flash but no chime will sound when the other vehicle is detected.

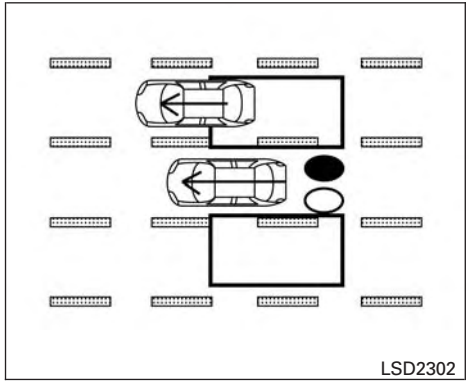

Illustration 3 – Overtaking another vehicle

Overtaking another vehicle

Illustration 3: The side indicator light illuminates if you overtake a vehicle and that vehicle stays in the detection zone for approximately 2 seconds.

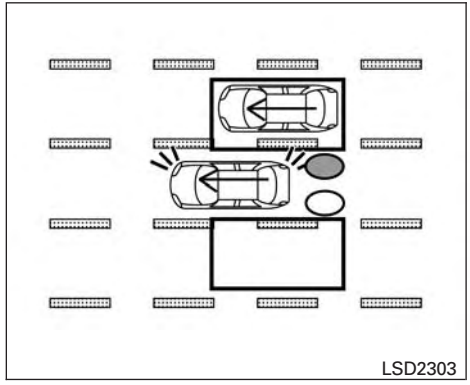

Illustration 4 – Overtaking another vehicle

Illustration 4: If the driver activates the turn signal while another vehicle is in the detection zone, then the system chimes (twice) and the side indicator light flashes.

NOTE:

- When overtaking several vehicles in a row, the vehicles after the first vehicle may not be detected if they are traveling close together.
- The radar sensors may not detect slower moving vehicles if they are passed quickly.

- If the driver activates the turn signal before a vehicle enters the detection zone, the side indicator light will flash but no chime will sound when the other vehicle is detected.

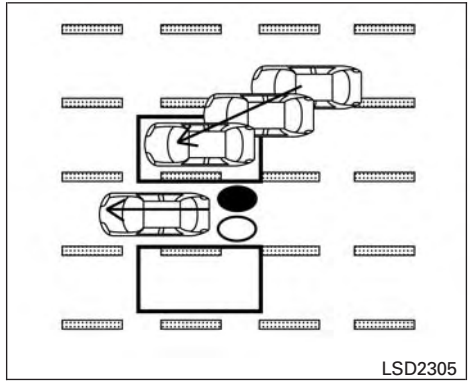

Illustration 5 – Entering from the side

Entering from the side

Illustration 5: The side indicator light illuminates if a vehicle enters the detection zone from either side.

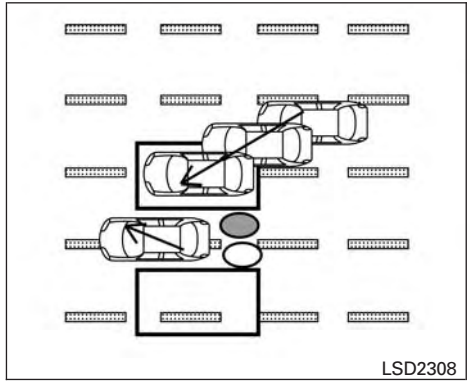

Illustration 6 – Entering from the side

Illustration 6: If the driver activates the turn signal while another vehicle is in the detection zone, then the system chimes (twice) and the side indicator light flashes.

NOTE:

- If the driver activates the turn signal before a vehicle enters the detection zone, the side indicator light will flash but no chime will sound when the other vehicle is detected.

- The radar sensors may not detect a vehicle which is traveling at about the same speed as your vehicle when it enters the detection zone.

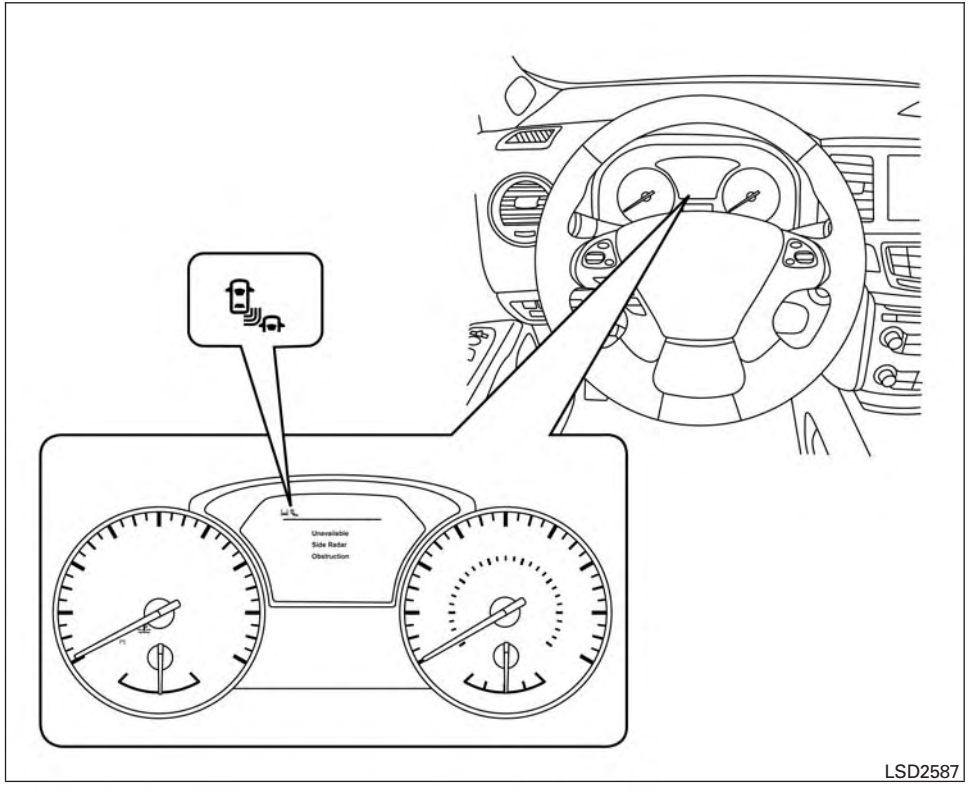

SYSTEM TEMPORARILY UNAVAILABLE

When radar blockage is detected, the system will be deactivated automatically. The “Side Radar Obstruction” warning message will appear and the BSW/RCTA indicator (white) will blink Ⓐ in the vehicle information display.

The system is not available until the conditions no longer exist.

The radar sensors may be blocked by temporary ambient conditions such as splashing water, mist or fog. The blocked condition may also be caused by objects such as ice, frost or dirt obstructing the radar sensors.

NOTE:

If the BSW system stops working, the RCTA system (if so equipped) will also stop working.

Action to take:

When the above conditions no longer exist, the system will resume automatically.

Malfunction

If the BSW system malfunctions, it will turn off automatically. The system malfunction warning message with the BSW/RCTA indicator (orange) will appear in the vehicle information display.

NOTE:

If the BSW system stops working, the RCTA system (if so equipped) will also stop working.

Action to take:

Stop the vehicle in a safe location, place the vehicle in the P (Park) position, turn the engine off and restart the engine. If the message continues to appear, have the system checked. It is recommended that you visit an INFINITI retailer for this service.

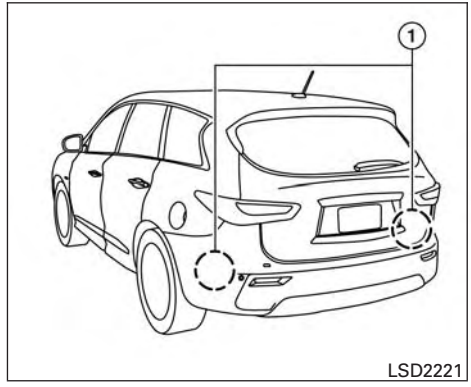

SYSTEM MAINTENANCE

The two radar sensors ① for the BSW and RCTA systems are located near the rear bumper. Always keep the area near the radar sensors clean.

The radar sensors may be blocked by temporary ambient conditions such as splashing water, mist or fog.

The blocked condition may also be caused by objects such as ice, frost or dirt obstructing the radar sensors.

Check for and remove objects obstructing the area around the radar sensors.

Do not attach stickers (including transparent material), install accessories or apply additional paint near the radar sensors.

Do not strike or damage the area around the radar sensors. It is recommended that you visit an INFINITI retailer if the area around the radar sensors is damaged due to a collision.

Radio frequency statement

For USA

FCC : OAYSRR2B

This device complies with part 15 of the FCC Rules. Operation is subject to the following two conditions:

(1) This device may not cause harmful interference, and (2) this device must accept any interference received, including interference that may cause undesired operation.

FCC Warning

Changes or modifications not expressly approved by the party responsible for compliance could void the user's authority to operate the equipment

For Canada

Applicable law: Canada 310

This device complies with Industry Canada licence-exempt RSS standard(s). Operation is subject to the following two conditions: (1) this device may not cause interference, and (2) this device must accept any interference, including interference that may cause undesired operation of the device.

Frequency bands: 24.05GHz – 24.25GHz

Output power: less than 20 milliwatts

⚠ WARNING

Failure to follow the warnings and instructions for proper use of the BSI system could result in serious injury or death.

- **The BSI system is not a replacement for proper driving procedure and is not designed to prevent contact with vehicles or objects. When changing lanes, always use the side and rear mirrors and turn and look in the direction you will move to ensure it is safe to change lanes. Never rely solely on the BSI system.**
- **There is a limitation to the detection capability of the radar or the sonar. Not every moving object or vehicle will be detected. Using the BSI system under some road, ground, lane marker, traffic or weather conditions could lead to improper system operation. Always rely on your own operation to avoid accidents.**
- **The BSI system operates above approximately 37 mph (60 km/h).**

The BSI system can help alert the driver of other vehicles in adjacent lanes when changing lanes.

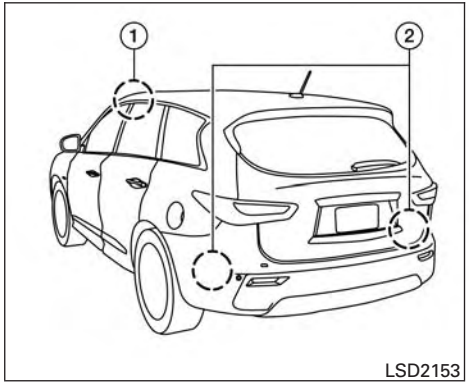

The BSI system uses a camera ① installed behind the windshield to monitor the lane markers of your traveling lane and radar sensors ② installed near the rear bumper to detect other vehicles in an adjacent lane.

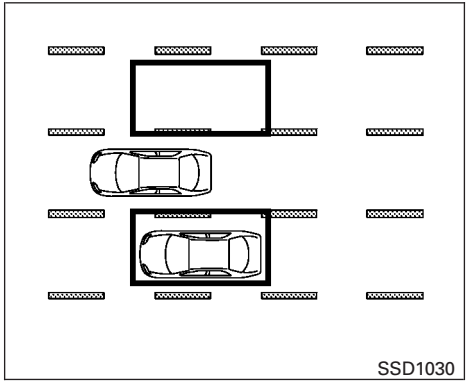

Detection zone

The BSI system operates above approximately 37 mph (60 km/h). If the system detects a vehicle in the detection zone and your vehicle is approaching the lane marker, the BSI system provides an audible warning (three times), flashes the BSW indicator light and slightly applies the brakes for a short period of time on one side to help return the vehicle back to the traveling lane. The BSI system provides an audible warning and turns on or flashes the BSW indicator light even if the BSW system is off.

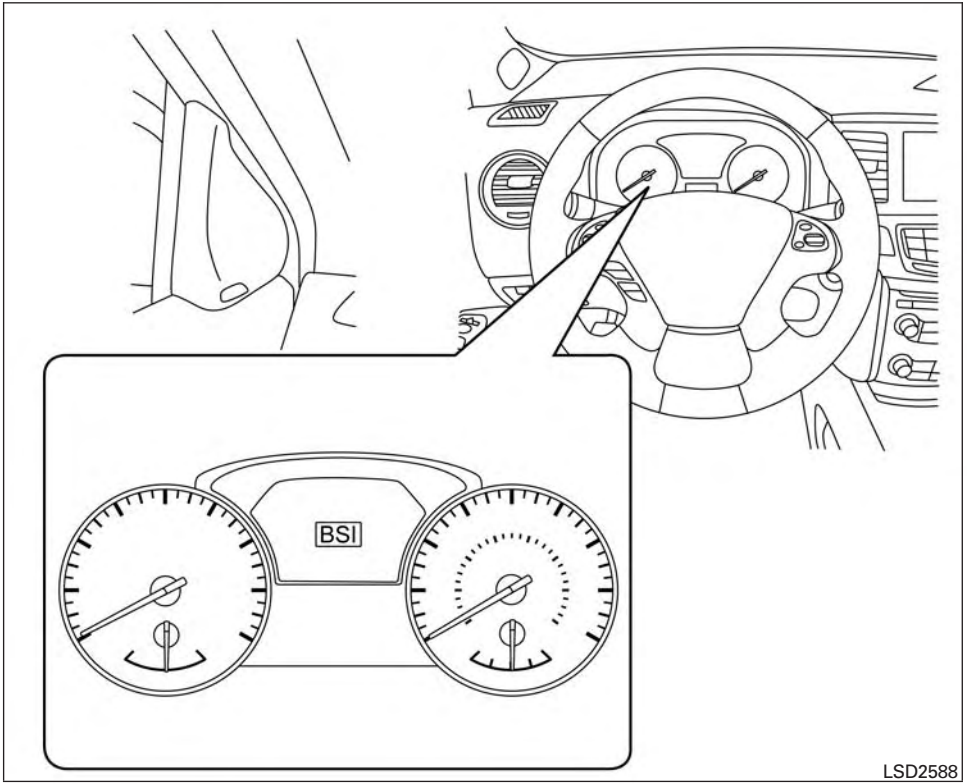

BSI SYSTEM OPERATION

If the radar sensors detect vehicles in the detection zone, the BSW indicator light located near the outside mirrors illuminates. If your vehicle is approaching a lane marker, the system chimes a sound (three times) and the BSW indicator light flashes. Then the system applies the brakes on one side of the vehicle for a moment to help return the vehicle back to the center of the lane. BSI operates regardless of turn signal usage.

NOTE:

Warning and brake control will only be activated if the BSW indicator light is already illuminated when your vehicle approaches a lane marker. If another vehicle comes into the detection zone after your vehicle has crossed a lane marker, no warning or brake control will be activated. For additional information, refer to “BSI driving situations” in this section. The BSI system is typically activated earlier than the Lane Departure Prevention (LDP) system when your vehicle is approaching a lane marker.

The BSI system turns on when the dynamic driver assistance switch on the steering wheel is pushed when the “Blind Spot Intervention®” is enabled in the “Driver Assistance” menu on the vehicle information display. The BSI ON indicator light on the instrument panel illuminates when the BSI system is turned on.

The BSI system provides a chime and turns on or flashes the BSW indicator light even if the BSW system is off.

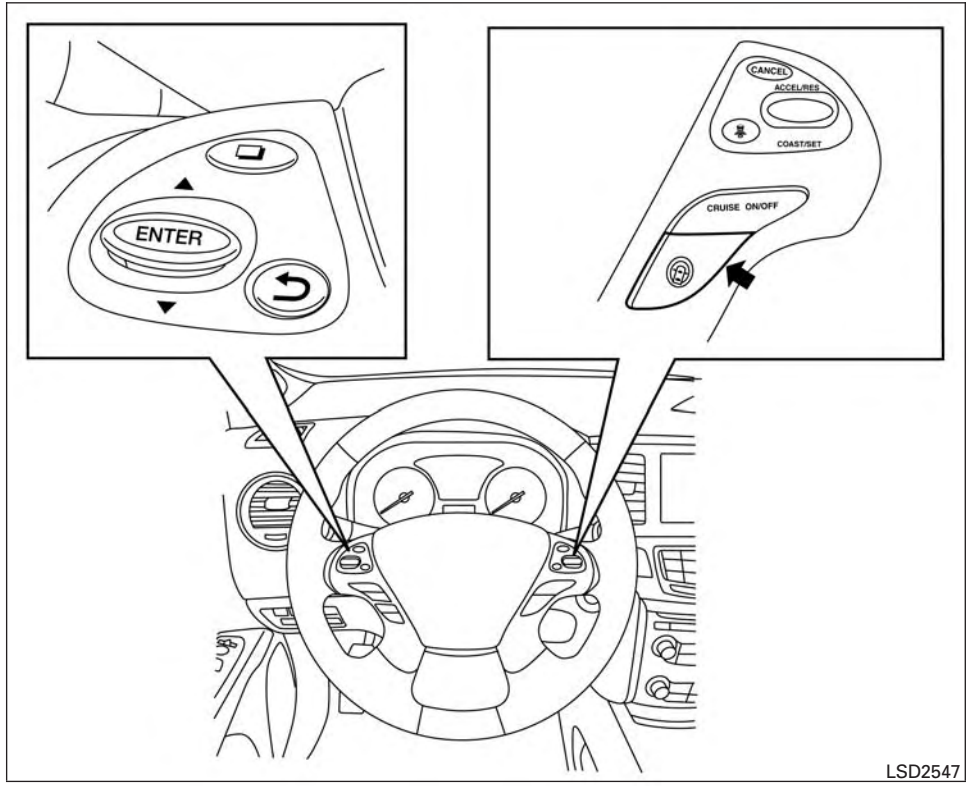

HOW TO ENABLE/DISABLE THE BSI SYSTEM

When the BSI system is enabled in the vehicle information display, the system can be turned off temporarily by pushing the warning systems switch. For additional information, refer to “Warning systems switch” in the “Instruments and controls” section of this manual.

Perform the following steps to enable or disable the BSI system.

1. Press the ❑ button until “Settings” displays in the vehicle information display. Use the ▲▼ button to select “Driver Assistance”. Then press the ENTER button.
2. Select “Driving Aids” and press the ENTER button.
3. To set the BSI system to on or off, use the ▲▼ buttons to navigate in the menu and use the ENTER button to select or change an item:
   - Select “Blind Spot” and press the ENTER button.
     - To turn on the warning, use the ENTER button to check box for “Blind Spot”
     - To turn on the assistance system, use the ENTER button to check box for “Assistance (BSI)”
     - Use the ENTER button to toggle through the brightness choices — “Bright/STD/Dark”

BSI SYSTEM LIMITATIONS

⚠ WARNING

Listed below are the system limitations for the BSI system. Failure to operate the vehicle in accordance with these system limitations could result in serious injury or death.

- **The radar sensors may not be able to detect and activate BSI when certain objects are present such as:**
  - **Pedestrians, bicycles, or animals.**
  - **Vehicles such as motorcycles, low height vehicles, or high ground clearance vehicles.**
  - **Oncoming vehicles.**
  - **Vehicles remaining in the detection zone when you accelerate from a stop. For additional information, refer to “BSI driving situations” in this section.**
  - **A vehicle merging into an adjacent lane at a speed approximately the same as your vehicle. For additional information, refer to “BSI driving situations” in this section.**
  - **A vehicle approaching rapidly from behind. For additional information, refer to “BSI driving situations” in this section.**
  - **A vehicle which your vehicle overtakes rapidly. For additional information, refer to “BSI driving situations” in this section.**
  - **A vehicle that passes through the detection zone quickly.**
- **The radar sensors detection zone is designed based on a standard lane width. When driving in a wider lane, the radar sensors may not detect vehicles in an adjacent lane. When driving in a narrow lane, the radar sensors may detect vehicles driving two lanes away.**

- The radar sensors are designed to ignore most stationary objects, however objects such as guardrails, walls, foliage and parked vehicles may occasionally be detected. This is a normal driving condition.
- Severe weather or road spray conditions may reduce the ability of the radar to detect other vehicles.
- The camera may not detect lane markers in the following situations and the BSI system may not operate properly.
  - On roads where there are multiple parallel lane markers; lane markers that are faded or not painted clearly; yellow painted lane markers; non-standard lane markers; lane markers covered with water, dirt, snow, etc.
  - On roads where discontinued lane markers are still detectable.
  - On roads where there are sharp curves.
  - On roads where there are sharply contrasting objects, such as shadows, snow, water, wheel ruts, seams or lines remaining after road repairs.
  - On roads where the traveling lane merges or separates.
  - When the vehicle's traveling direction does not align with the lane markers.
  - When traveling close to the vehicle in front of you, which obstructs the lane camera unit detection range.
  - When rain, snow or dirt adheres to the windshield in front of a lane camera unit.
  - When the headlights are not bright due to dirt on the lens or if aiming is not adjusted properly.
  - When strong light enters a lane camera unit. (For example: light directly shines on the front of the vehicle at sunrise or sunset.)
  - When a sudden change in brightness occurs. (For example: when the vehicle enters or exits a tunnel or under a bridge.)
- Do not use the BSI system under the following conditions because the system may not function properly.
  - During bad weather (For example: rain, fog, snow, etc.)
  - When driving on slippery roads, such as on ice or snow, etc.
  - When driving on winding or uneven roads.
  - When there is a lane closure due to road repairs.
  - When driving in a makeshift lane.
  - When driving on roads where the lane width is too narrow.
  - When driving with a tire that is not within normal tire conditions (e.g. tire wear, low tire pressure, installation of spare tire, tire chains, non-standard wheels).
  - When the vehicle is equipped with non-original brake parts or suspension parts.
- Do not use the BSI systems when towing a trailer.
- Excessive noise (e.g. audio system volume, open vehicle window) will interfere with the chime sound, and it may not be heard.

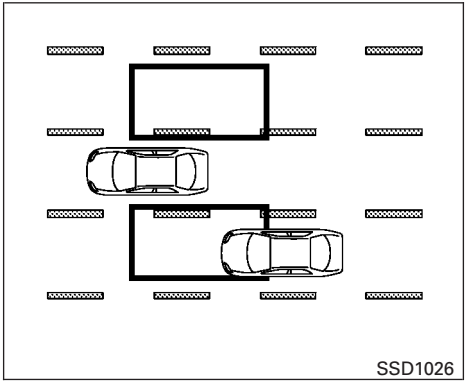

Illustration 1 – Approaching from behind

BSI DRIVING SITUATIONS

Another vehicle approaching from behind

Illustration 1: The Blind Spot Warning indicator light illuminates if a vehicle enters the detection zone from behind in an adjacent lane.

However, if the overtaking vehicle is traveling much faster than your vehicle, the indicator light may not illuminate before the detected vehicle is beside your vehicle. Always use the side and rear mirrors and turn and look in the direction your vehicle will move to ensure it is safe to change lanes.

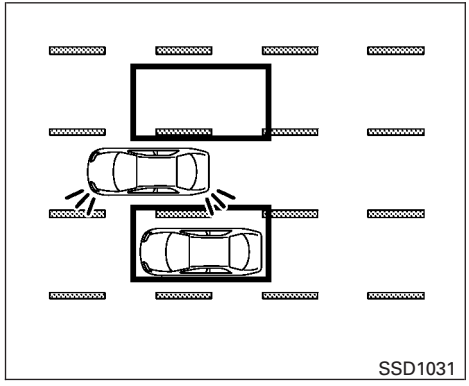

Illustration 2 – Approaching from behind

Illustration 2: If the driver activates the turn signal then the system chimes a sound (twice) and the Blind Spot Warning indicator light flashes.

NOTE:

If the driver activates the turn signal before a vehicle enters the detection zone, the BSW indicator light will flash but no chime will sound when the other vehicle is detected.

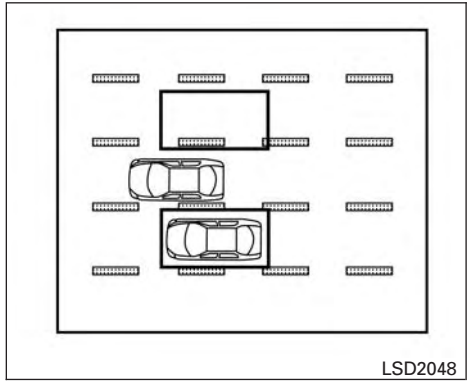

Illustration 3 – Approaching from behind

Illustration 3: If the BSI system is on and your vehicle is approaching a lane marker and a vehicle is in the detection zone, the system chimes a sound (three times), and the BSW indicator light flashes. Then the BSI system slightly applies the brakes on one side to help return the vehicle back to the center of the driving lane.

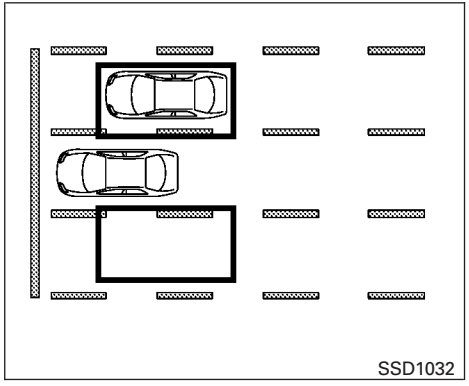

Illustration 4 – Accelerate from a stop

NOTE:

Illustration 4: If you accelerate from a stop with a vehicle in the detection zone, the other vehicle may not be detected.

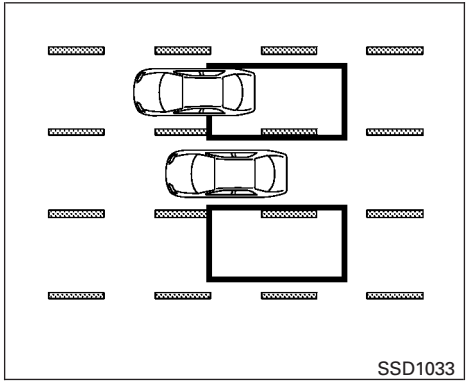

Illustration 5 – Overtaking another vehicle

Overtaking another vehicle

Illustration 5: The BSW indicator light illuminates if you overtake a vehicle and that vehicle stays in the detection zone for approximately 3 seconds.

The radar sensors may not detect slower moving vehicles if they are passed quickly.

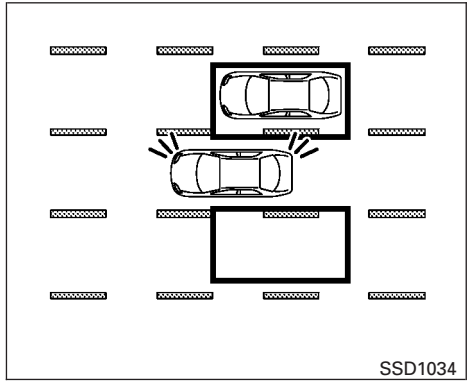

Illustration 6 – Overtaking another vehicle

Illustration 6: If the driver activates the turn signal while another vehicle is in the detection zone, then the system chimes a sound (twice) and the BSW indicator light flashes.

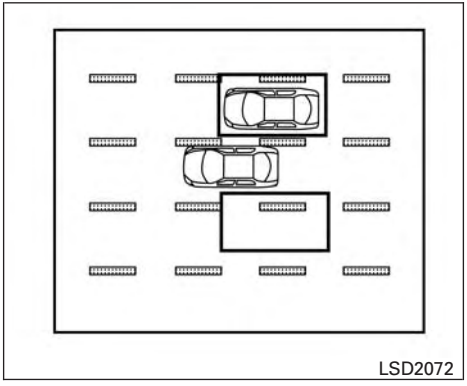

Illustration 7 – Overtaking another vehicle

Illustration 7: If the BSI system is on and your vehicle approaches a lane marker while another vehicle is in the detection zone the system chimes a sound (three times) and the BSW indicator light flashes. Then, the BSI system slightly applies the brakes on the appropriate side to help return the vehicle back to the center of the driving lane.

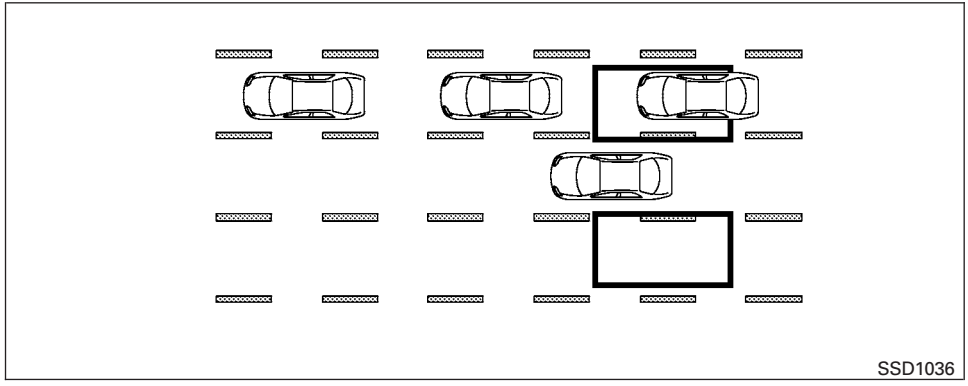

Illustration 8 – Overtaking several vehicles

NOTE:

Illustration 8: When overtaking several vehicles in a row, the vehicles after the first vehicle may not be detected if they are traveling close together.

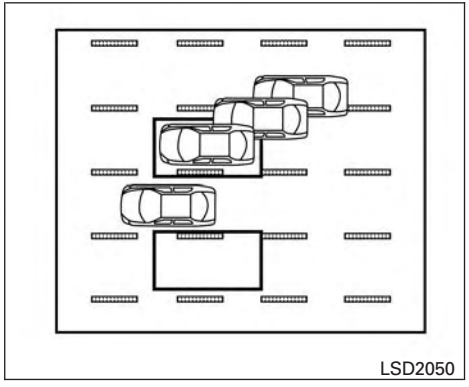

Illustration 9 – Entering from the side

Entering from the side

Illustration 9: The BSW indicator light illuminates if a vehicle enters the detection zone from either side.

NOTE:

The radar sensors may not detect a vehicle which is traveling at about the same speed as your vehicle when it enters the detection zone.

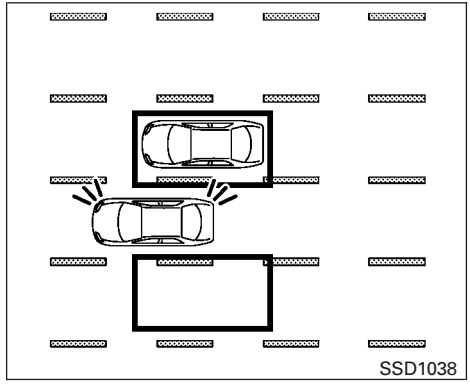

Illustration 10 – Entering from the side

Illustration 10: If the driver activates the turn signal while another vehicle is in the detection zone, then the BSW indicator light flashes and a chime will sound twice.

NOTE:

If the driver activates the turn signal before a vehicle enters the detection zone, the BSW indicator light will flash but no chime will sound when another vehicle is detected.

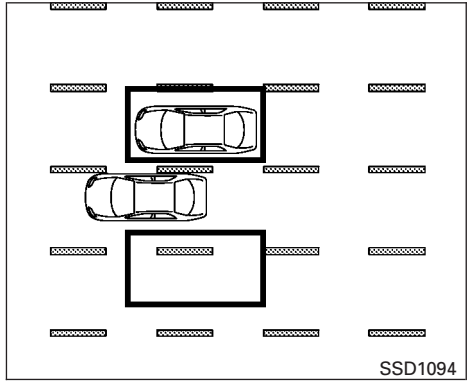

Illustration 11 – Entering from the side

Illustration 11: If the BSI system is on and your vehicle approaches the lane marker while another vehicle is in the detection zone, the BSW indicator light flashes and a chime will sound three times. Then, the BSI system slightly applies the brakes on the appropriate side to help return the vehicle back to the center of the driving lane.

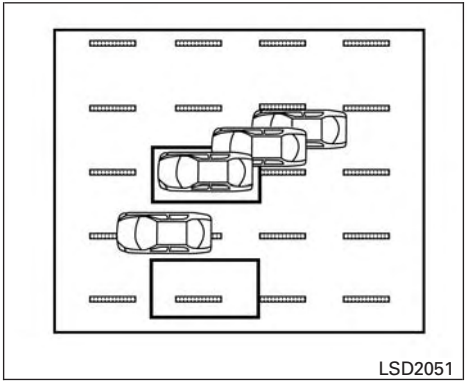

Illustration 12 – Entering from the side

NOTE:

- Illustration 12: The BSI system will not operate if your vehicle is on a lane marker when another vehicle enters the detection zone. In this case, only the BSW system operates.
- BSI braking will not operate or will stop operating and only a warning chime will sound under the following conditions:
  - When the brake pedal is depressed.
  - When the vehicle is accelerated during BSI system operation.
  - When steering quickly.
  - When the ICC, DCA, FCW or FEB warnings sound.
  - When the hazard warning flashers are operated.
  - When driving on a curve at a high speed.

SYSTEM TEMPORARILY UNAVAILABLE

When any of the following messages appear on the vehicle information display, a chime will sound and the BSI system will be turned off automatically.

- "Unavailable Road is slippery":
  When the VDC system (except traction control system function) or ABS operates.
- "Unavailable VDC OFF":
  When the VDC system is turned off.
- "Unavailable Snow mode active":
  When the drive mode select switch is turned to the SNOW mode.
- "Unavailable High Cabin Temp.":
  When the camera detects that the interior temperature is high (over approximately 104°F (40°C)).
- "Unavailable Side Radar Obstruction":
  When side radar blockage is detected.

Turn off the BSI system and turn it on again when the above conditions no longer exist.

SYSTEM MALFUNCTION

When the BSI system malfunctions, it will be turned off automatically, a chime will sound and the BSI system warning light (orange) will illuminate.

Action to take:
Stop the vehicle in a safe location, place the vehicle in the P (Park) position, turn the engine off and restart the engine. If the warning light (orange) continues to illuminate, have the system checked. It is recommended that you visit an INFINITI retailer for this service.

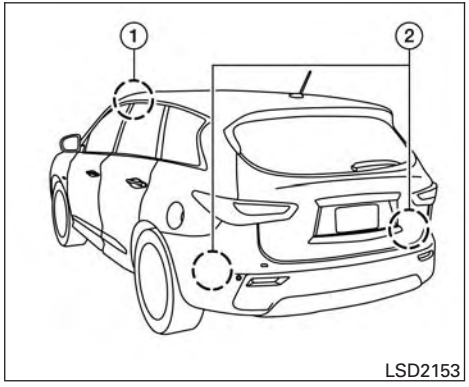

SYSTEM MAINTENANCE

The lane camera unit ① for the BSI system is located above the inside mirror. The two radar sensors ② for the BSI system are located near the rear bumper. To keep the proper operation of the BSI system and prevent a system malfunction, be sure to observe the following:

- Always keep the windshield and the area near the radar sensors clean.
- The radar sensors may be blocked by temporary ambient conditions such as splashing water, mist or fog. The blocked condition may also be caused by objects such as ice, frost or dirt obstructing the radar sensors. Check for and remove objects obstructing the area around the radar sensors.
- Do not attach stickers (including transparent material), install accessories or apply additional paint near the camera unit or radar sensors.
- Do not place reflective materials, such as white paper or a mirror, on the instrument panel. The reflection of sunlight may adversely affect the camera unit's capability of detecting the lane markers.
- Do not strike or damage the area around the radar sensors. Do not touch the camera lens or remove the screw located on the camera unit. It is recommended that you visit an INFINITI retailer if the camera unit and/or area around the radar sensors is damaged due to a collision.

Radio frequency statement

For USA

FCC: OAYSRR2B

This device complies with part 15 of the FCC Rules. Operation is subject to the following two conditions:

(1) This device may not cause harmful interference, and (2) this device must accept any interference received, including interference that may cause undesired operation.

FCC Warning

Changes or modifications not expressly approved by the party responsible for compliance could void the user's authority to operate the equipment.

For Canada

Applicable law: Canada 310

This device complies with Industry Canada licence-exempt RSS standard(s). Operation is subject to the following two conditions: (1) this device may not cause interference, and (2) this device must accept any interference, including interference that may cause undesired operation of the device.

Frequency bands: 24.05GHz — 24.25GHz

Output power: less than 20 milliwatts

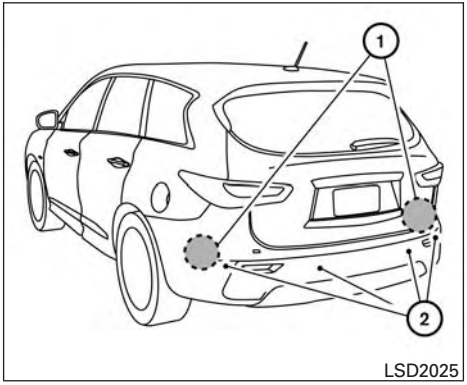

LSD2025

WARNING

Failure to follow the warnings and instructions for proper use of the BCI system could result in serious injury or death.

- **The BCI system is not a replacement for proper driving procedure, is not designed to prevent contact with vehicles or objects and does not provide full brake power. When backing out of parking space, always use the side and rear mirrors and turn and look in the direction you will move. Never rely solely on the BCI system.**
- **There is a limitation to the detection capability of the radar or the sonar. Using the BCI systems under some road, ground, lane marker, traffic or weather conditions could lead to improper system operation. Always rely on your own operation to avoid accidents.**

The BCI systems can help alert the driver of an approaching vehicle or objects behind the vehicle when the driver is backing out of a parking space.

When the shift position is R (Reverse) and the vehicle speed is less than approximately 5 mph (8 km/h), the BCI system operates.

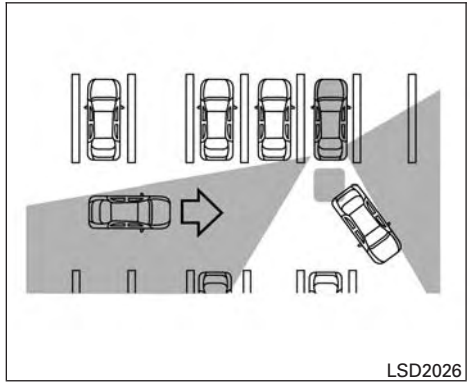
LSD2026

The BCI system uses radar sensors ① installed on both sides near the rear bumper to detect an approaching vehicle and sonar sensors to detect objects in the rear.

The radar sensors ① detect an approaching vehicle from up to approximately 49 ft (15 m) away. The sonar sensors ② detect stationary objects behind the vehicle up to approximately 4.9 ft (1.5 m) ③.

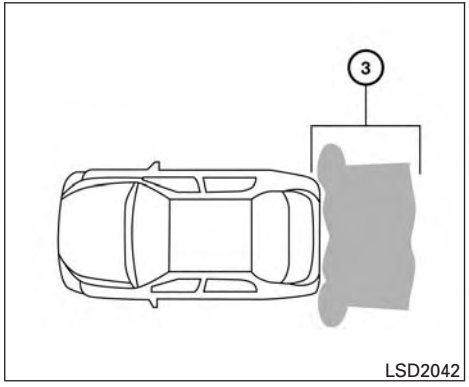

If the radar detects a vehicle approaching from the side or the sonar detects close stationary objects behind the vehicle, the system gives visual and audible warnings. If the driver does not apply the brakes, the system automatically applies the brake for a moment when the vehicle is moving backwards. After the automatic brake application, the driver must depress the brake pedal to maintain brake pressure. If the driver's foot is on the accelerator pedal, the system pushes the accelerator upward before applying the brake. If you continue to press the accelerator, the system will not engage the brake.

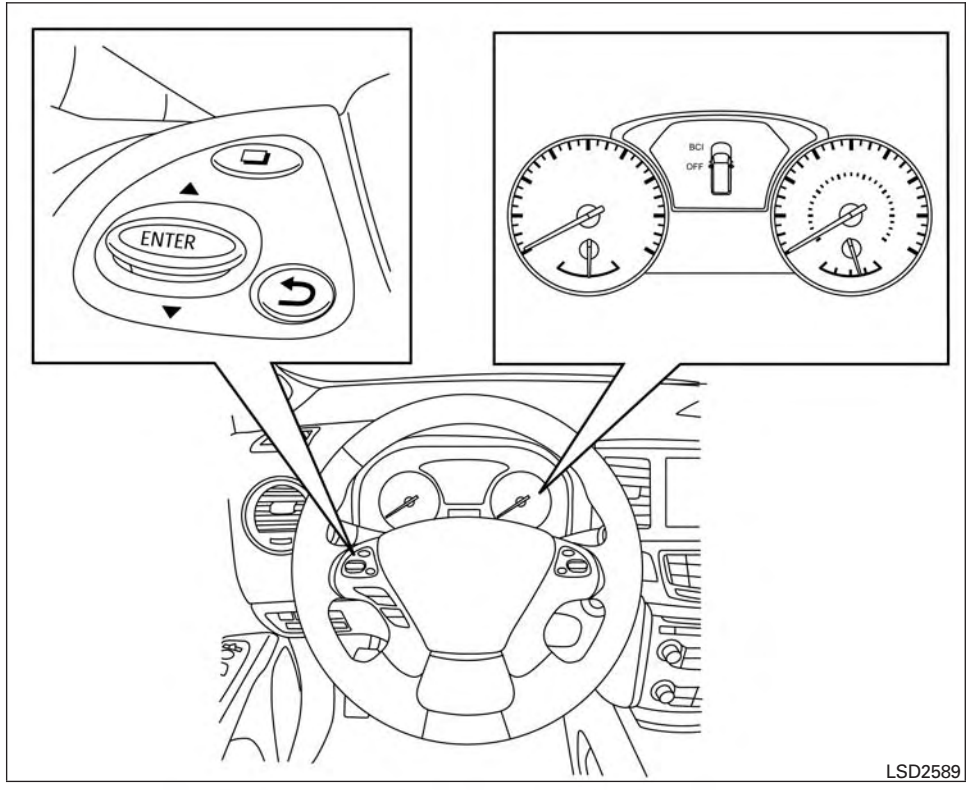

BCI SYSTEM OPERATION

When the shift lever is placed in R (Reverse) position, the BCI ON appears in the vehicle information display.

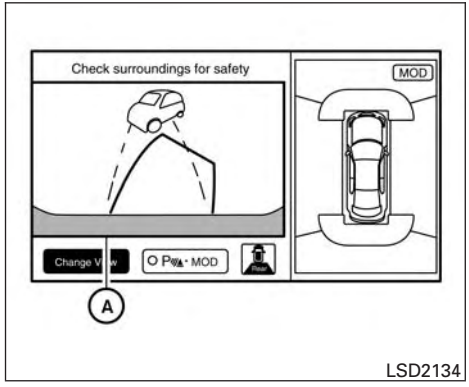

If the radar detects an approaching vehicle from the side, the system chimes a sound (single beep), the Blind Spot Warning indicator light on the side of the approaching vehicle flashes and a yellow rectangular frame appears in display Ⓐ.

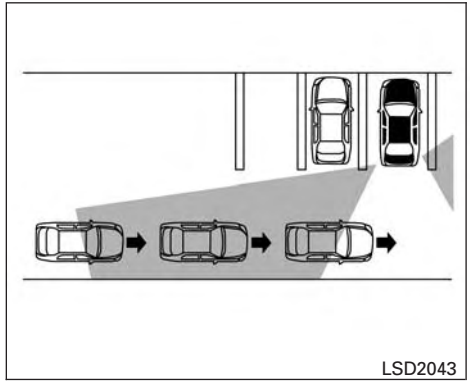

Illustration 1

NOTE:

- In the case of several vehicles approaching in a row (Illustration 1) or in the opposite direction (Illustration 2), a chime may not be sounded by the BCI system after the first vehicle passes the sensors.

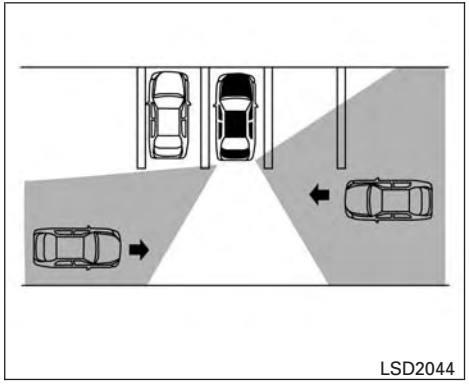

Illustration 2

- The sonar system chime indicating there is an object behind the vehicle has a higher priority than the BCI chime (single beep) indicating an approaching vehicle. If the sonar system detects an object behind the vehicle and the BCI system detects an approaching vehicle at the same time the following indicators are provided:
  - The sonar system chime sounds
  - The Blind Spot Warning indicator light on the side of the approaching vehicle flashes and
  - A yellow rectangular frame appears in display

If an approaching vehicle or object behind the vehicle is detected when your vehicle is backing up, a red frame will appear in the display Ⓐ and the system will chime three times. Then, the brakes will be applied momentarily. After the automatic brake application, the driver must depress the brake pedal to maintain brake pressure.

If the driver's foot is on the accelerator pedal, the system moves the accelerator pedal upward before the braking is applied. However, if you continue to accelerate, the system will not engage the brakes.

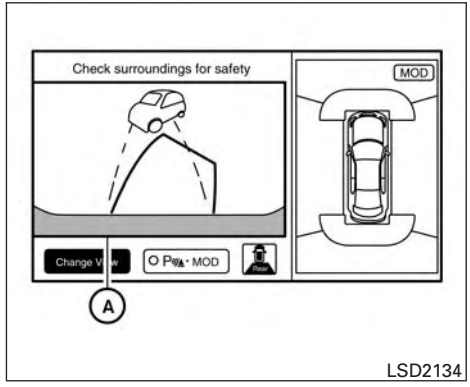

The system does not operate if the object is very close to the bumper.

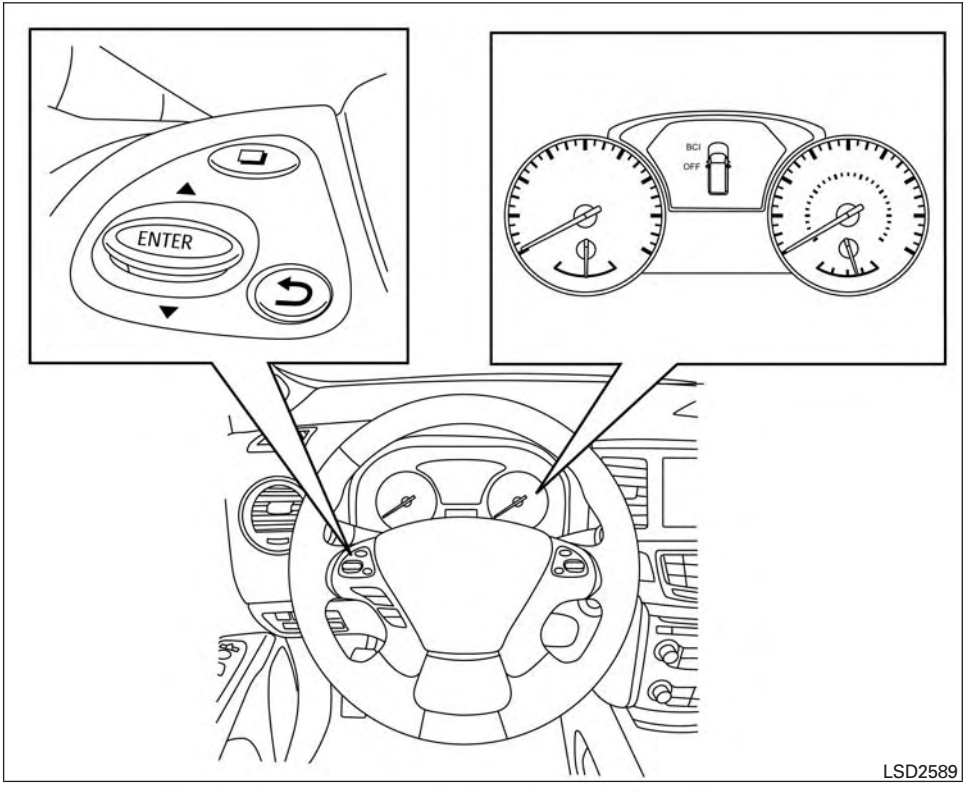

TURNING THE BCI SYSTEM ON/OFF

The BCI system automatically turns on every time the engine is started.

The BCI system can be turned off temporarily by pushing the BCI switch. The BCI OFF display appears on the vehicle information display. When the shift lever is placed into the R (Reverse) position again the BCI system is turned on.

Perform the following steps to enable or disable the BCI system.

1. Press the button until “Settings” displays in the vehicle information display. Use the to select “Driver Assistance”. Then press the ENTER button.
2. Select “Back-up Collision Interv.”, and press the ENTER button.
3. To set the BCI system to on or off, use the buttons to navigate in the menu and use the ENTER button to select or change an item.

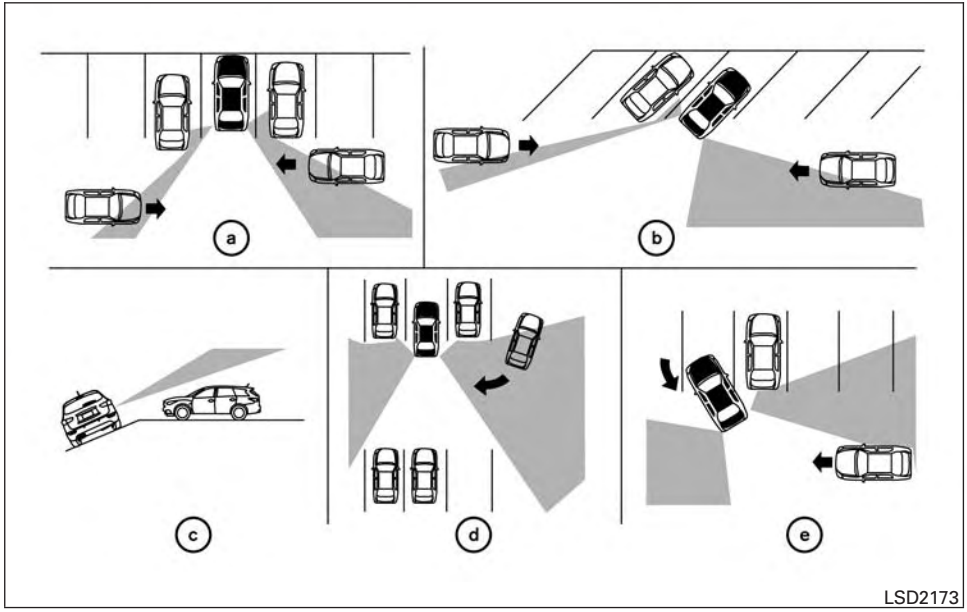

BCI SYSTEM LIMITATIONS

⚠ WARNING

Failure to follow the warnings and instructions for proper use of the BCI system could result in serious injury or death.

- **Always check surroundings and turn to check what is behind you before backing up. The radar sensors detect approaching (moving) vehicles. The radar sensors cannot detect every object such as:**
  - **Pedestrians, bicycles, motorcycles, animals or child operated toy vehicles**
  - **A vehicle that is passing at speeds greater than approximately 15 mph (24 km/h)**
- **The radar sensors may not detect approaching vehicles in certain situations:**
  - **Illustration a: When a vehicle parked next to you obstructs the beam of the radar sensor.**
  - **Illustration b: When the vehicle is parked in an angled parking space.**
  - **Illustration c: When the vehicle is parked on inclined ground.**
  - **Illustration d: When an approaching vehicle turns into your vehicle's parking lot aisle.**

- **Illustration e: When the angle formed by your vehicle and approaching vehicle is small.**

- **The following conditions may reduce the ability of the radar to detect other vehicles:**
  - **Severe weather**
  - **Road spray**
  - **Ice build up on the vehicle**
  - **Frost build up on the vehicle**
  - **Dirt up on the vehicle**
- **Do not attach stickers (including transparent material), install accessories or apply additional paint near the radar sensors. These conditions may reduce the ability of the radar to detect other vehicles.**
- **The sonar sensors detect stationary objects behind the vehicle. The sonar sensor may not detect:**
  - **Small or moving objects**
  - **Wedge-shaped objects**
  - **Object close to the bumper (less than approximately 1 ft (30 cm))**
  - **Thin objects such as rope, wire and chain, etc.**
- **The brake engagement by the BCI system is not as effective on a slope as it is on flat ground. When on a steep slope the system may not function properly.**
- **Do not use the BCI system under the following conditions because the system may not function properly:**
  - **When driving with a tire that is not within normal tire conditions (e.g. tire wear, low tire pressure, installation of spare tire, tire chains, non-standard wheels).**
  - **When the vehicle is equipped with non-original brake parts or suspension parts.**
- **Do not use the BCI systems when towing a trailer.**
- **Excessive noise (e.g. audio system volume, open vehicle window) will interfere with the chime sound, and it may not be heard.**

SYSTEM TEMPORARILY NOT AVAILABLE

If the following messages appear on the vehicle information display, a chime will sound and the BCI system will be turned off automatically.

- “Unavailable High Accelerator Temp.”:
  If the vehicle is parked in direct sunlight under high temperature conditions (over approximately 104°F (40°C)) and then started, the BCI system may be deactivated automatically and the “Unavailable High Accelerator Temp” message will appear in the vehicle information display for a period of time.

  When the interior temperature is reduced, turn off the BCI system and turn it on again.
- “Unavailable Side Radar Obstruction”:
  When side radar blockage is detected.

  When the blockage is removed, turn off the BCI system and turn it on again.

SYSTEM MALFUNCTION

If the BCI system malfunctions, it will turn off automatically, a chime will sound and the BCI system warning light (orange) will illuminate.

Action to take:
Stop the vehicle in a safe location, turn the engine off and restart the engine. If the warning light (orange) continues to illuminate, have the system checked. It is recommended that you visit an INFINITI retailer for this service.

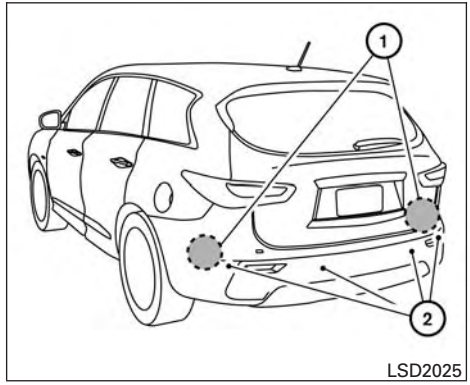

SYSTEM MAINTENANCE

The radar sensors ① and the sonar sensors ② for the BCI system are located near the rear bumper. Always keep the area near the radar sensors clean.

The radar sensors may be blocked by temporary ambient conditions such as splashing water, mist or fog.

The blocked condition may also be caused by objects such as ice, frost or dirt obstructing the radar sensors.

Check for and remove objects obstructing the area around the radar sensors.

Do not attach stickers (including transparent material), install accessories or apply additional paint near the radar sensors.

Do not strike or damage the area around the radar sensors. It is recommended that you visit an INFINITI retailer if the area around the radar sensors is damaged due to a collision.

REAR CROSS TRAFFIC ALERT (RCTA) (if so equipped)

⚠ WARNING

Failure to follow the warnings and instructions for proper use of the RCTA system could result in serious injury or death.

- **The RCTA system is not a replacement for proper driving procedures and is not designed to prevent contact with vehicles or objects. When backing out of a parking space, always use the side and rear mirrors and turn and look in the direction your vehicle will move. Never rely solely on the RCTA system.**

The RCTA system will assist you when backing out from a parking space. When the vehicle is in reverse, the system is designed to detect other vehicles approaching from the right or left of the vehicle. If the system detects cross traffic, it will alert you.

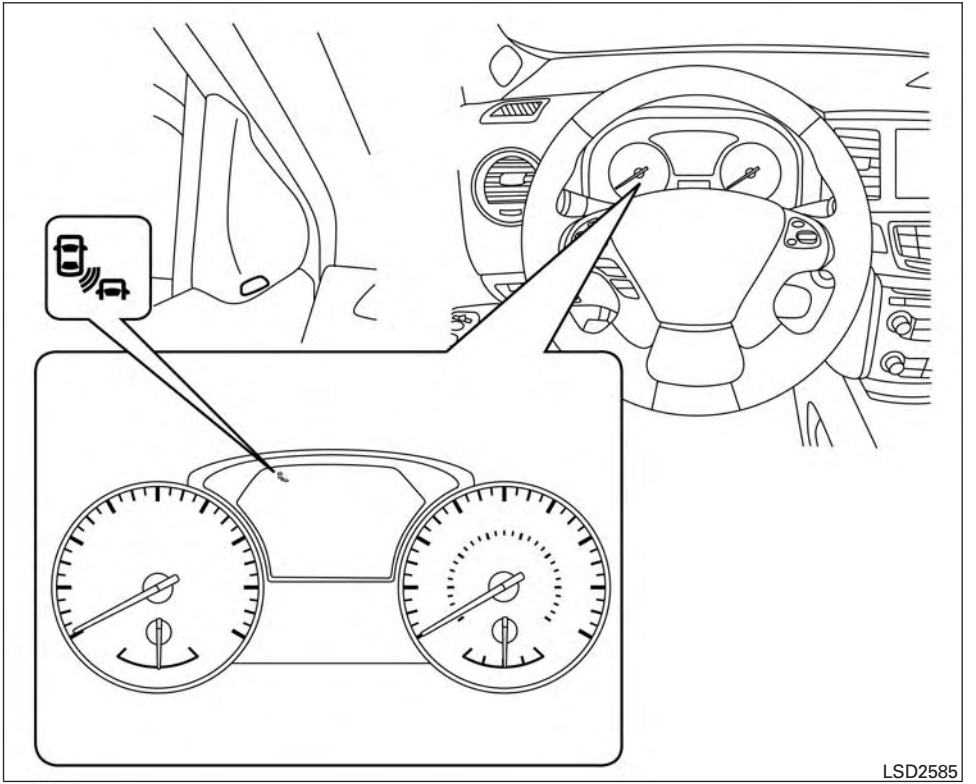

1. Side BSW/RCTA Indicator Light
2. BSW/RCTA Indicator

RCTA SYSTEM OPERATION

The RCTA system can help alert the driver of an approaching vehicle when the driver is backing out of a parking space.

When the shift position is in R (Reverse) and the vehicle speed is less than approximately 5 mph (8 km/h), the RCTA system is operational.

If the radar detects an approaching vehicle from either side, the system chimes (once) and the side BSW/RCTA indicator light flashes on the side the vehicle is approaching from.

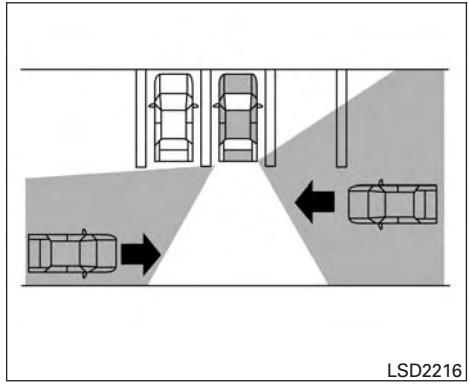

The RCTA system uses radar sensors ① installed on both sides near the rear bumper to detect an approaching vehicle.

The radar sensors ① can detect an approaching vehicle from up to approximately 66 ft (20 m) away.

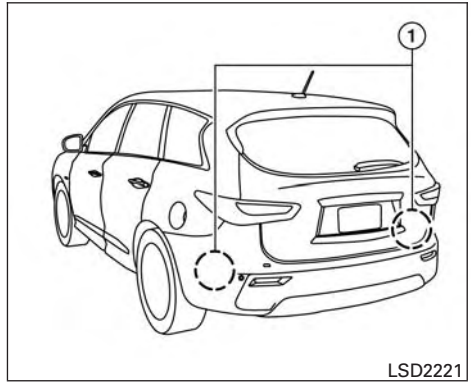

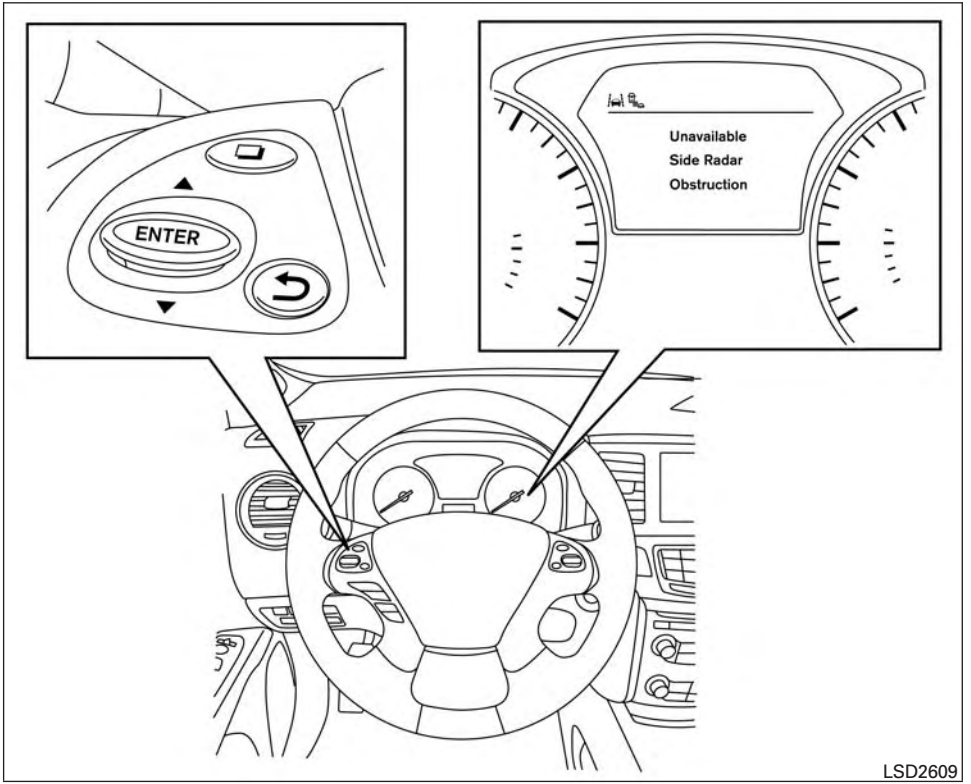

HOW TO ENABLE/DISABLE THE RCTA SYSTEM

When the RCTA system is enabled in the vehicle information display, the system can be turned off temporarily by pushing the warning systems switch. For additional information, refer to “Warning systems switch” in the “Instruments and controls” section of this manual.

Perform the following steps to enable or disable the RCTA system.

1. Press the button until “Settings” displays in the vehicle information display and then press ENTER. Use the button to select “Driver Assistance”. Then press the ENTER button.
2. Select “Driving Aids” and press the ENTER button.
3. Select “Blind Spot” and press the ENTER button.
4. Select “Blind Spot” and press the ENTER button.

When the RCTA system is turned on, the BSW/RCTA indicator (white) in the vehicle information display illuminates.

NOTE:

- The RCTA system is integrated into the BSW system. There is not a separate selection in the vehicle information display for the RCTA system. When the BSW is disabled, the RCTA system is also disabled.
- When enabling/disabling the system, the system setting will be retained even if the engine is restarted.

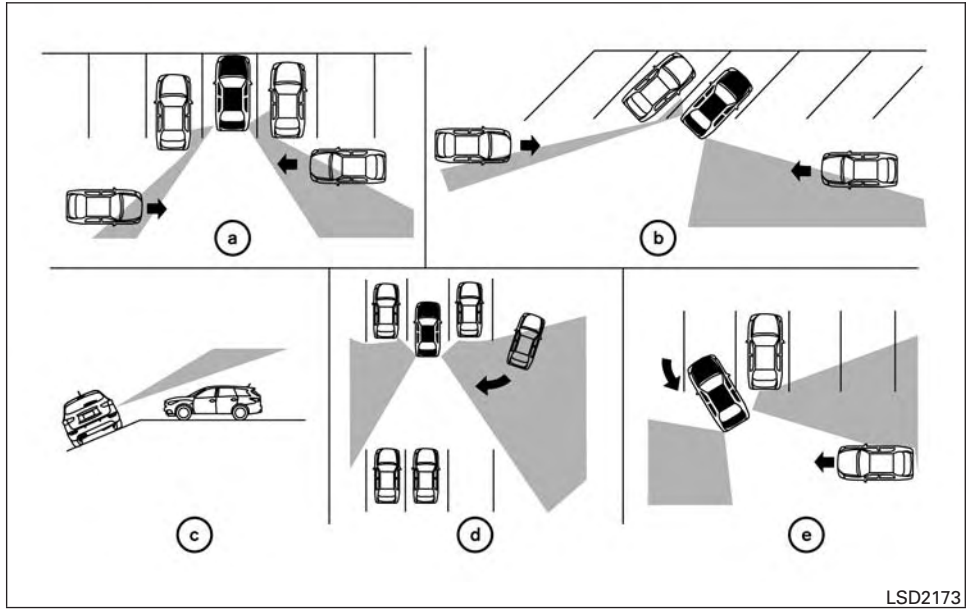

RCTA SYSTEM LIMITATIONS

⚠ WARNING

Listed below are the system limitations for the RCTA system. Failure to operate the vehicle in accordance with these system limitations could result in serious injury or death.

- **Always check surroundings and turn to check what is behind you before backing up. The radar sensors detect approaching (moving) vehicles. The radar sensors cannot detect every object such as:**
  - **Pedestrians, bicycles, motorcycles, animals or child-operated toy vehicles**
  - **A vehicle that is passing at speeds greater than approximately 19 mph (30 km/h)**
  - **A vehicle that is passing at speeds lower than approximately 5 mph (8 km/h)**
- **The radar sensors may not detect approaching vehicles in certain situations:**
  - **Illustration a: When a vehicle parked next to you obstructs the beam of the radar sensor.**
  - **Illustration b: When the vehicle is parked in an angled parking space.**
  - **Illustration c: When the vehicle is parked on inclined ground.**
  - **Illustration d: When an approaching vehicle turns into your vehicle's parking lot aisle.**
  - **Illustration e: When the angle formed by your vehicle and approaching vehicle is small**
- **The following conditions may reduce the ability of the radar to detect other vehicles:**
  - **Severe weather**
  - **Road spray**
  - **Ice/frost/snow build-up on the vehicle**
  - **Dirt build- up on the vehicle**
- **Do not attach stickers (including transparent material), install accessories or apply additional paint near the radar sensors. These conditions may reduce the ability of the radar to detect other vehicles**
- **Excessive noise (e.g. audio system volume, open vehicle window) will interfere with the chime sound, and it may not be heard.**

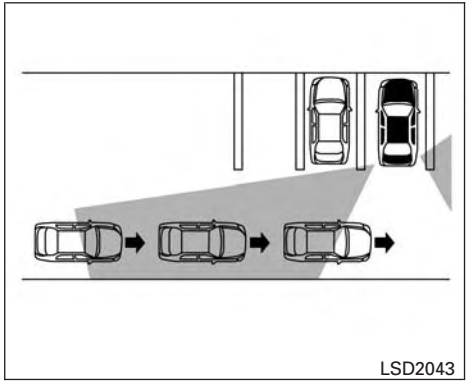

Illustration 1

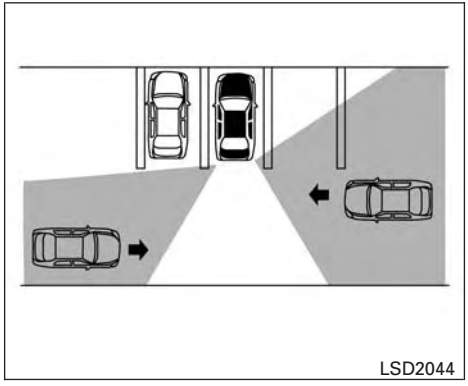

Illustration 2

NOTE:

In the case of several vehicles approaching in a row (Illustration 1) or in the opposite direction (Illustration 2), a chime may not be sounded by the RCTA system after the first vehicle passes the sensors.

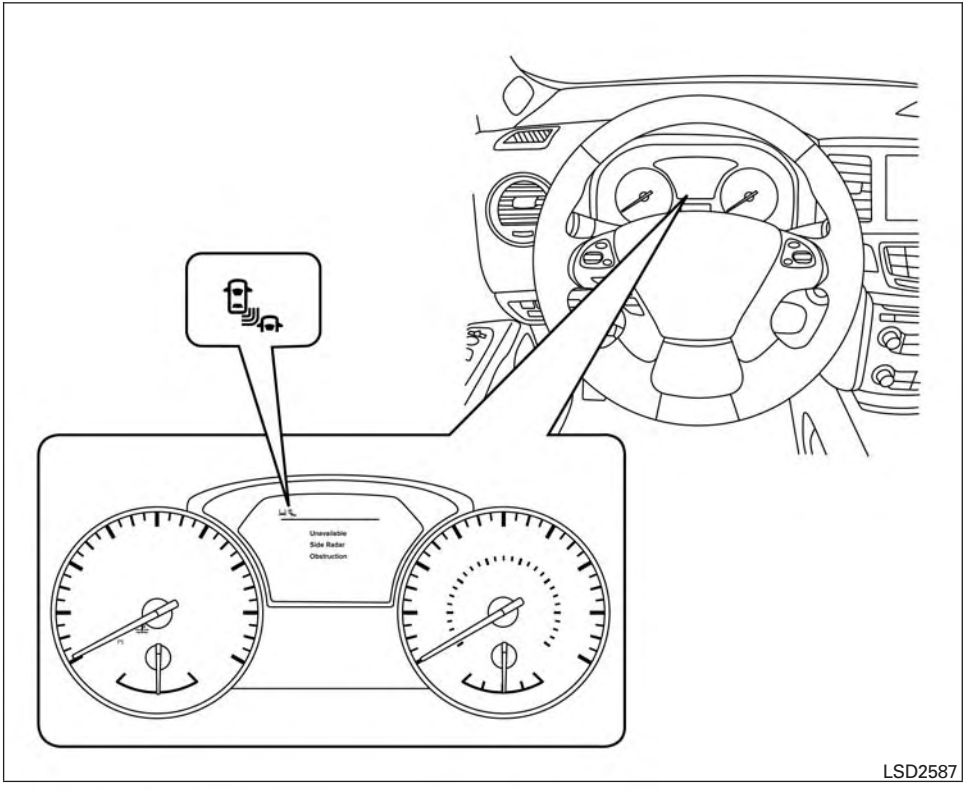

SYSTEM TEMPORARILY UNAVAILABLE

When radar blockage is detected, the system will be deactivated automatically. The “Side Radar Obstruction” warning message will appear and the BSW/RCTA indicator (white) will blink Ⓐ in the vehicle information display.

The systems are not available until the conditions no longer exist.

The radar sensors may be blocked by temporary ambient conditions such as splashing water, mist or fog.

The blocked condition may also be caused by objects such as ice, frost or dirt obstructing the radar sensors.

NOTE:

If the BSW system stops working, the RCTA system will also stop working.

Action to take
When the above conditions no longer exist, the system will resume automatically.

Malfunction

When the RCTA system malfunctions, it will turn off automatically. The system malfunction warning message with the BSW/RCTA indicator (orange) will appear in the vehicle information display.

NOTE:

If the BSW system stops working, the RCTA system (if so equipped) will also stop working.

Action to take
Stop the vehicle in a safe location, place the vehicle in the P (Park) position, turn the engine off and restart the engine. If the message continues to appear, have the system checked. It is recommended that you visit an INFINITI retailer for this service.

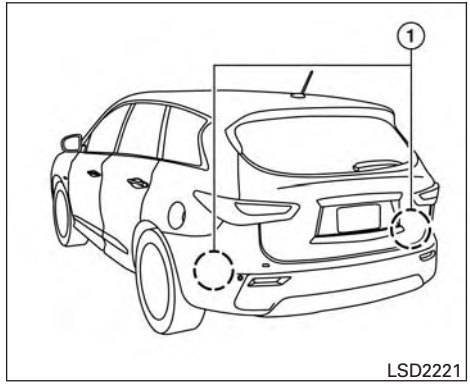

SYSTEM MAINTENANCE

The two radar sensors ① for the BSW and RCTA systems are located near the rear bumper. Always keep the area near the radar sensors clean.

The radar sensors may be blocked by temporary ambient conditions such as splashing water, mist or fog.

The blocked condition may also be caused by objects such as ice, frost or dirt obstructing the radar sensors.

Check for and remove objects obstructing the area around the radar sensors.

Do not attach stickers (including transparent material), install accessories or apply additional paint near the radar sensors.

Do not strike or damage the area around the radar sensors. It is recommended that you visit an INFINITI retailer if the area around the radar sensors is damaged due to a collision.

Radio frequency statement

For USA

FCC : OAYSRR2B

This device complies with part 15 of the FCC Rules. Operation is subject to the following two conditions:

(1) This device may not cause harmful interference, and (2) this device must accept any interference received, including interference that may cause undesired operation.

FCC Warning

Changes or modifications not expressly approved by the party responsible for compliance could void the user's authority to operate the equipment

For Canada

Applicable law: Canada 310

This device complies with Industry Canada licence-exempt RSS standard(s). Operation is subject to the following two conditions: (1) this device may not cause interference, and (2) this device must accept any interference, including interference that may cause undesired operation of the device.

Frequency bands: 24.05GHz – 24.25GHz

Output power: less than 20 milliwatts

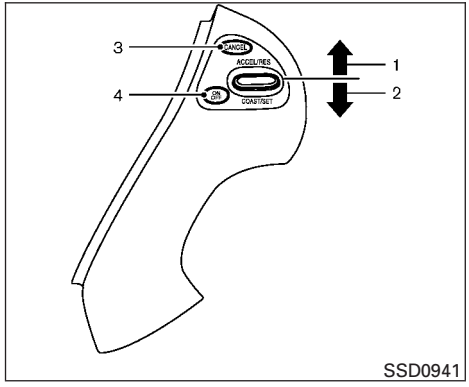

PRECAUTIONS ON CRUISE CONTROL

1. ACCEL/RES switch
2. COAST/SET switch
3. CANCEL switch
4. ON/OFF switch

- If the cruise control system malfunctions, it will cancel automatically. The SET indicator in the vehicle information display will blink to warn the driver.
- If the engine coolant temperature becomes excessively high, the cruise control system will be canceled automatically.
- If the SET indicator blinks, turn the cruise control main switch off and have the system checked. It is recommended that you visit an INFINITI retailer for this service.
- The SET indicator may sometimes blink when the cruise control main switch is turned on while pushing the ACCEL/RES, COAST/SET or CANCEL switch. To properly set the cruise control system, perform the steps below.

⚠ WARNING

Do not use the cruise control when driving under the following conditions:

- **When it is not possible to keep the vehicle at a set speed**
- **In heavy traffic or in traffic that varies in speed**
- **On winding or hilly roads**
- **On slippery roads (rain, snow, ice, etc.)**
- **In very windy areas**

Doing so could cause a loss of vehicle control and result in an accident.

CRUISE CONTROL OPERATIONS

The cruise control allows driving at a speed between 25 - 89 mph (40 - 144 km/h) without keeping your foot on the accelerator pedal.

To turn on the cruise control, push the ON/OFF switch on. The CRUISE indicator light in the vehicle information display will illuminate.

To set cruising speed, accelerate the vehicle to the desired speed, push the COAST/SET switch and release it. The SET indicator light in the vehicle information display will illuminate. Take your foot off the accelerator pedal. Your vehicle maintains the set speed.

- **To pass another vehicle,** depress the accelerator pedal. When you release the pedal, the vehicle returns to the previously set speed.
- The vehicle may not maintain the set speed when going up or down steep hills. If this happens, drive without the cruise control.

To cancel the preset speed, use one of the following three methods:

- Push the CANCEL button; the SET indicator light in the vehicle information display goes out.
- Tap the brake pedal; the SET indicator light goes out.
- Push the ON/OFF switch off. Both the CRUISE indicator light and SET indicator light in the vehicle information display go out.

The cruise control is automatically canceled and the SET light in the vehicle information display goes out if:

- You depress the brake pedal while pushing the ACCEL/RES or SET/COAST switch. The preset speed is deleted from memory.
- The vehicle slows down more than 8 mph (13 km/h) below the set speed.
- You move the shift lever to N (Neutral).

To reset at a faster cruising speed, use one of the following three methods:

- Depress the accelerator pedal. When the vehicle attains the desired speed, push and release the COAST/SET switch.
- Push and hold the ACCEL/RES switch. When the vehicle attains the speed you desire, release the switch.
- Push and release the ACCEL/RES switch. Each time you do this, the set speed increases by about 1 mph (1.6 km/h).

To reset at a slower cruising speed, use one of the following three methods:

- Lightly tap the brake pedal. When the vehicle attains the desired speed, push the COAST/SET switch and release it.
- Push and hold the COAST/SET switch. Release the switch when the vehicle slows to the desired speed.
- Push and release the COAST/SET switch. Each time you do this, the set speed decreases by about 1 mph (1.6 km/h).

To resume the preset speed, push and release the ACCEL/RES switch. The vehicle returns to the last set cruising speed when the vehicle speed is over 25 mph (40 km/h).

⚠ WARNING

Failure to follow the warnings and instructions for proper use of the ICC system could result in serious injury or death.

- **The ICC system is only an aid to assist the driver and is not a collision warning or avoidance device. It is the driver's responsibility to stay alert, drive safely and be in control of the vehicle at all times..**
- **Always observe posted speed limits and do not set the speed over them.**
- **Always drive carefully and attentively when using the ICC system. Read and understand the Owner's Manual thoroughly before using the ICC system. To avoid serious injury or death, do not rely on the system to prevent accidents or to control the vehicle's speed in emergency situations. Do not use the ICC system except in appropriate road and traffic conditions.**

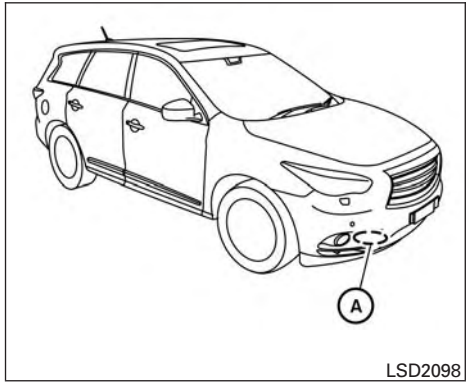

LSD2098

The ICC system is intended to enhance the operation of the vehicle when following a vehicle traveling in the same lane and direction.

The ICC system uses a radar sensor Ⓐ located on the front of the vehicle to detect vehicles traveling ahead.

If the radar sensor detects a slower moving vehicle ahead, the system will reduce the vehicle speed so that your vehicle follows the vehicle in front at the selected distance.

The detection range of the sensor is approximately 390 ft (120 m) ahead.

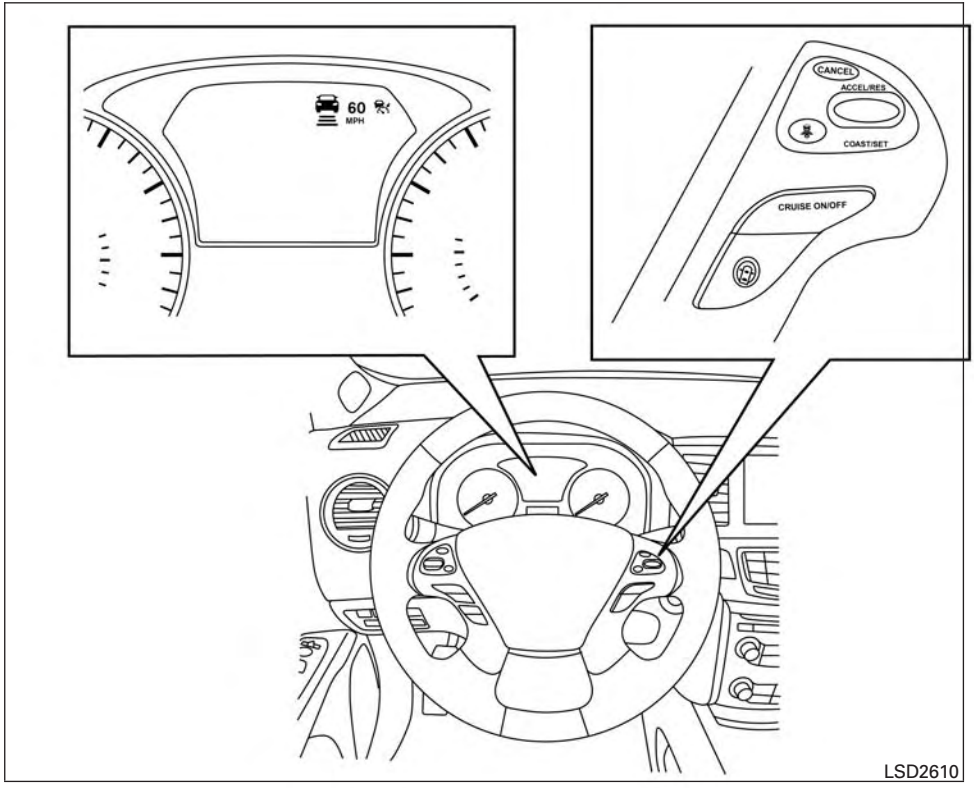

ICC SYSTEM OPERATION

The ICC system maintains a selected distance from the vehicle in front of you within the speed range 0 to 90 mph (0 to 144 km/h) up to the set speed. The set speed can be selected by the driver between 20 to 90 mph (32 to 144 km/h), based on road conditions.

The vehicle travels at the set speed when the road ahead is clear.

The ICC system is designed to maintain a selected distance from the vehicle in front of you and can reduce the speed to match a slower vehicle ahead. The system will decelerate the vehicle as necessary and if the vehicle ahead comes to a stop, the vehicle decelerates to a standstill. However, the ICC system can only apply up to 40% of the vehicle's total braking power.

This system should only be used when traffic conditions allow vehicle speeds to remain fairly constant or when vehicle speeds change gradually. If a vehicle moves into the traveling lane ahead or if a vehicle traveling ahead rapidly decelerates, the distance between vehicles may become closer because the ICC system cannot decelerate the vehicle quickly enough. If this occurs, the ICC system will sound a warning chime and blink the system display to notify the driver to take necessary action.

For additional information, refer to “Approach warning” in this section.

The following items are controlled in the ICC system:

- When there are no vehicles traveling ahead, the ICC system maintains the speed set by the driver. The set speed range is between approximately 20 and 90 mph (32 and 144 km/h).
- When there is a vehicle traveling ahead, the ICC system adjusts the speed to maintain the distance, selected by the driver, from the vehicle ahead. If the vehicle ahead comes to a stop, the vehicle decelerates to a standstill within the limitations of the system. The system will cancel once it judges a standstill with a warning chime.
- When the vehicle traveling ahead has moved out from its lane of travel, the ICC system accelerates and maintains vehicle speed up to the set speed.

The ICC system does not control vehicle speed or warn you when you approach stationary and slow moving vehicles. You must pay attention to vehicle operation to maintain proper distance from vehicles ahead when approaching toll gates or traffic congestion.

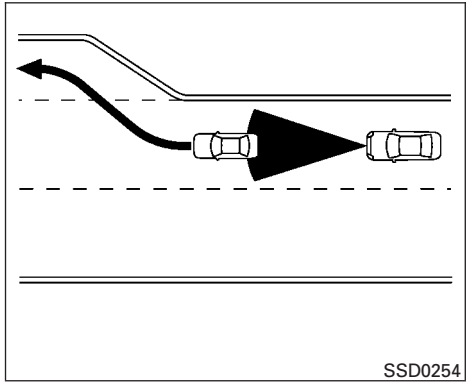

When driving on the freeway at a set speed and approaching a slower traveling vehicle ahead, the ICC system will adjust the speed to maintain the distance, selected by the driver, from the vehicle ahead. If the vehicle ahead changes lanes or exits the freeway, the ICC system will accelerate and maintain the speed up to the set speed. Pay attention to the driving operation to maintain control of the vehicle as it accelerates to the set speed.

Normally when controlling the distance to a vehicle ahead, this system automatically accelerates or decelerates your vehicle according to the speed of the vehicle ahead. Depress the accelerator to properly accelerate your vehicle when acceleration is required for a lane change. Depress the brake pedal when deceleration is required to maintain a safe distance to the vehicle ahead due to its sudden braking or if a vehicle cuts in. Always stay alert when using the ICC system.

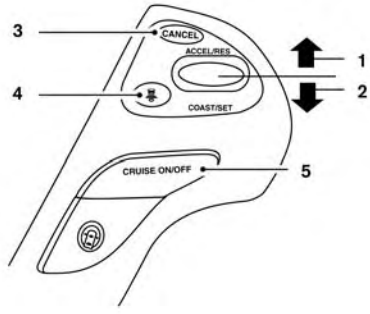

LSD2056

THE ICC SWITCH

The system is operated by the CRUISE ON/OFF switch and four control switches, all mounted on the steering wheel.

1. **ACCEL/RES switch:**

   Resumes set speed or increases speed incrementally.

2. **COAST/SET switch:**

   Sets desired cruise speed or reduces speed incrementally.

3. **CANCEL switch:**

   Deactivates the system without erasing the set speed.

4. **DISTANCE switch:**

   Changes the vehicle's following distance:

   - Long
   - Middle
   - Short

5. **CRUISE ON/OFF switch:**

   Master switch to activate the system.

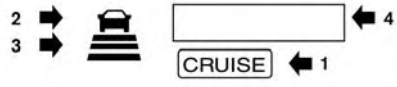

LSD2534

The ICC system display and indicators

The display is located between the speedometer and tachometer.

1. CRUISE ON/OFF switch indicator:

   - **ICC system ON indicator (white):** Indicates that the CRUISE ON/OFF switch is ON.
   - **ICC system SET indicator (green):** Indicates that the cruising speed is set.
   - **ICC system warning (orange):** Indicates that if there is a malfunction in the ICC system.

2. Vehicle ahead detection indicator:

   Indicates whether it detects a vehicle in front of you.

3. Set distance indicator:

   Displays the selected distance between vehicles set with the distance switch.

4. Set vehicle speed indicator:

   Indicates the set vehicle speed.

   For Canadian models, the speed is displayed in km/h.

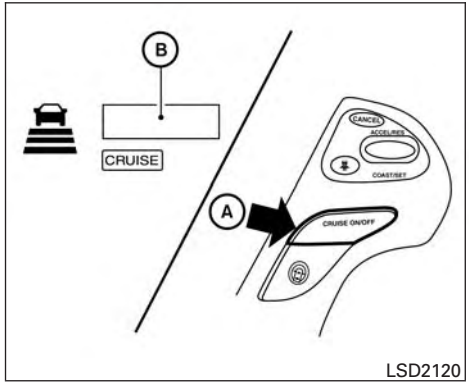

LSD2120

Operating ICC

To turn on the cruise control: quickly push and release the CRUISE ON/OFF switch Ⓐ. The ICC system ON indicator (white), set distance indicator and set vehicle speed indicator come on in a standby state for setting.

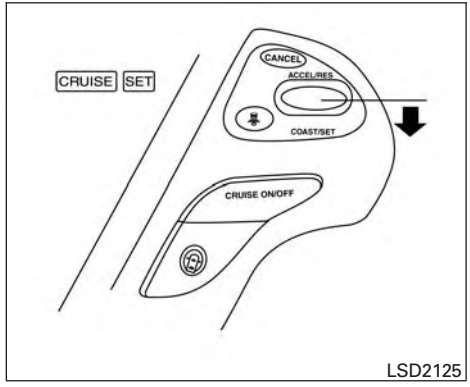

LSD2125

To set cruising speed: accelerate your vehicle to the desired speed, push the COAST/SET switch and release it. The ICC system set indicator (green), vehicle ahead detection indicator, set distance indicator and set vehicle speed indicator Ⓑ will come on. Take your foot off the accelerator pedal. Your vehicle will maintain the set speed.

When the COAST/SET switch is pushed under the following conditions, the system cannot be set and the ICC indicators will blink for approximately 2 seconds:

- When traveling below 20 mph (32 km/h) and a vehicle ahead is not detected

- When the shift lever is not in the D (Drive) or Manual mode
- When the parking brake is applied
- When the brakes are operated by the driver

When the COAST/SET switch is pushed under the following conditions, the system cannot be set.

A warning chime will sound and a message will pop up:

- When the VDC system is off (To use the ICC system, turn on the VDC system. Push the CRUISE ON/OFF switch to turn off the ICC system and reset the ICC switch by pushing the CRUISE ON/OFF switch again.)

  For additional information about the VDC sytem, refer to “Vehicle Dynamic Control (VDC) system” in this section.
- When ABS or VDC is operating
- When a wheel is slipping (To use the ICC system, make sure the wheels are no longer slipping. Push the CRUISE ON/OFF switch to turn off the ICC system, and reset the ICC system by pushing the CRUISE ON/OFF switch again.)

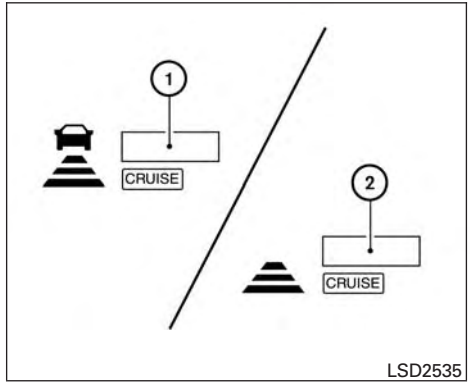

① System set display with vehicle ahead

② System set display without vehicle ahead

Vehicle detected ahead

When a vehicle is detected in the lane ahead, the ICC system decelerates the vehicle by controlling the throttle and applying the brakes to match the speed of a slower vehicle ahead. The system then controls the vehicle speed based on the speed of the vehicle ahead to maintain the driver selected distance.

NOTE:

- **The stoplights of the vehicle come on when braking is performed by the ICC system.**
- **When the brake operates, a noise may be heard. This is not a malfunction.**

When a vehicle ahead is detected, the vehicle ahead detection indicator comes on. The ICC system will also display the set speed and selected distance.

Vehicle ahead not detected

When a vehicle is no longer detected ahead, the ICC system gradually accelerates your vehicle to resume the previously set vehicle speed. The ICC system then maintains the set speed.

When a vehicle is no longer detected, the vehicle ahead detection indicator turns off.

If a vehicle ahead appears during acceleration to the set vehicle speed or any time the ICC system is in operation, the system controls the distance to that vehicle.

When a vehicle is no longer detected under approximately 15 mph (24 km/h), the system will be canceled.

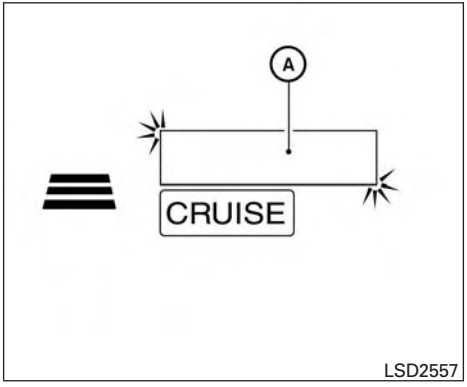

When passing another vehicle, the set speed indicator Ⓐ will flash when the vehicle speed exceeds the set speed. The vehicle detect indicator will turn off when the area ahead of the vehicle is open. When the pedal is released, the vehicle will return to the previously set speed.

Even though your vehicle speed is set in the ICC system, you can depress the accelerator pedal when it is necessary to accelerate your vehicle rapidly.

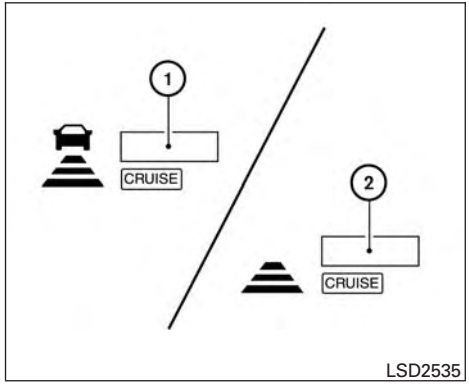

① System set display with vehicle ahead

② System set display without vehicle ahead

How to change the set vehicle speed

To cancel the preset speed: use one of the following methods:

- Push the CANCEL switch. The set vehicle speed indicator will go out.
- Tap the brake pedal. The set vehicle speed indicator will go out.
- Turn the CRUISE ON/OFF switch off. The ICC indicators will go out.

To reset at a faster cruising speed: use one of the following methods:

- Depress the accelerator pedal. When the vehicle attains the desired speed, push and release the COAST/SET switch.
- Push and hold the ACCEL/RES switch. The set vehicle speed will increase by approximately 5 mph (5 km/h).
- Push, then quickly release the ACCEL/RES switch. Each time you do this, the set speed will increase by approximately 1 mph (1 km/h).

To reset at a slower cruising speed: use one of the following methods:

- Lightly tap the brake pedal. When the vehicle attains the desired speed, push the COAST/SET switch and release it.
- Push and hold the COAST/SET switch. The set vehicle speed will decrease by approximately 5 mph (5 km/h).
- Push, then quickly release the COAST/SET switch. Each time you do this, the set speed will decrease by approximately 1 mph (1 km/h).

To resume the preset speed: push and release the ACCEL/RES switch. The vehicle will resume the last set cruising speed when the vehicle speed is over 20 mph (32 km/h).

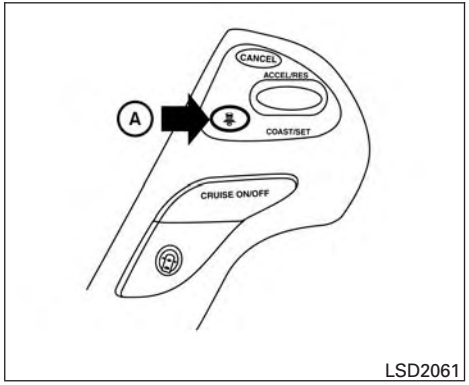

LSD2061

How to change the set distance to the vehicle ahead

The distance to the vehicle ahead can be selected at any time depending on the traffic conditions.

Each time the distance switch Ⓐ is pushed, the set distance will change to long, middle, short and back to long again, in that sequence.

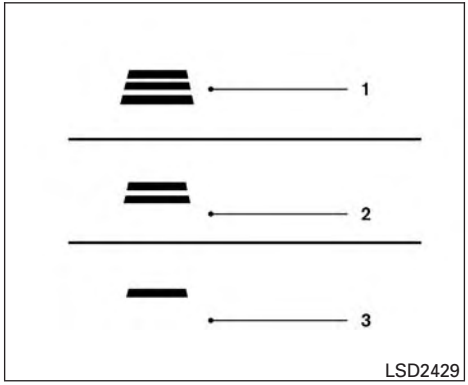

LSD2429

	Distance	Approximate distance at 60 mph (100 km/h) [ft (m)]
1.	Long	180 (55)
2.	Middle	130 (40)
3.	Short	80 (25)

- The distance to the vehicle ahead will change according to the vehicle speed. The higher the vehicle speed, the longer the distance.
- If the engine is stopped, the set distance becomes “long”. (Each time the engine is started, the initial setting becomes “long”.)

Approach warning

If your vehicle comes closer to the vehicle ahead due to rapid deceleration of that vehicle or if another vehicle cuts in, the system warns the driver with the chime and ICC system display. Decelerate by depressing the brake pedal to maintain a safe vehicle distance if:

- The chime sounds.
- The vehicle ahead detection indicator blinks.

The warning chime may not sound in some cases when there is a short distance between vehicles. Some examples are:

- When the vehicles are traveling at the same speed and the distance between vehicles is not changing.
- When the vehicle ahead is traveling faster and the distance between vehicles is increasing.
- When a vehicle cuts in near your vehicle.

The warning chime will not sound when:

- The vehicle approaches other vehicles that are parked or moving slowly.
- The accelerator pedal is depressed, overriding the system.

NOTE:

The approach warning chime may sound and the system display may blink when the ICC sensor detects objects on the side of the vehicle or on the side of the road. This may cause the ICC system to decelerate or accelerate the vehicle. The ICC sensor may detect these objects when the vehicle is driven on winding roads, narrow roads, hilly roads, or when entering or exiting a curve. In these cases you will have to manually control the proper distance ahead of your vehicle.

Also, the sensor sensitivity can be affected by vehicle operation (steering maneuver or driving position in the lane) or traffic or vehicle condition (for example, if a vehicle is being driven with some damage).

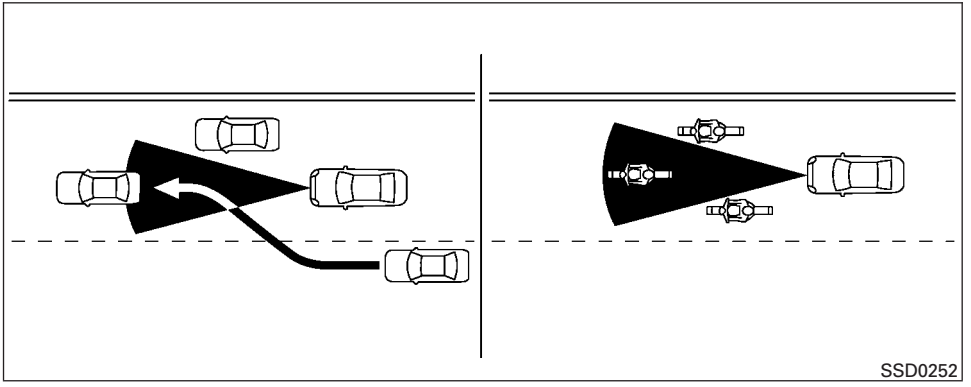

ICC SYSTEM LIMITATIONS

⚠ WARNING

Listed below are the system limitations for the ICC system. Failure to operate the vehicle in accordance with these system limitations could result in serious injury or death.

- **The ICC system is primarily intended for use on straight, dry, open roads with light traffic. It is not advisable to use the ICC system in city traffic or congested areas.**
- **The ICC system will not adapt automatically to road conditions. This system should be used in evenly flowing traffic. Do not use the system on roads with sharp curves, or on icy roads, in heavy rain or in fog.**

- **As there is a performance limit to the distance control function, never rely solely on the ICC system. This system does not correct careless, inattentive or absentminded driving, or overcome poor visibility in rain, fog, or other bad weather. Decelerate the vehicle speed by depressing the brake pedal, depending on the distance to the vehicle ahead and the surrounding circumstances in order to maintain a safe distance between vehicles.**
- **If the vehicle ahead comes to a stop, the vehicle decelerates to a standstill within the limitations of the system. The system will cancel once it judges that the vehicle has come to a standstill and sound a warning chime. To prevent the vehicle from moving, the driver must depress the brake pedal.**
- **Always pay attention to the operation of the vehicle and be ready to manually control the proper following distance. The ICC system may not be able to maintain the selected distance between vehicles (following distance) or selected vehicle speed under some circumstances.**
- **The system may not detect the vehicle in front of you in certain road or weather conditions. To avoid accidents, never use the ICC system under the following conditions:**
  - **On roads where the traffic is heavy or there are sharp curves**
  - **On slippery road surfaces such as on ice or snow, etc.**
  - **During bad weather (rain, fog, snow, etc.)**
  - **When rain, snow or dirt adhere to the bumper around the distance sensor**
  - **On steep downhill roads (the vehicle may go beyond the set vehicle speed and frequent braking may result in overheating the brakes)**
  - **On repeated uphill and downhill roads**
  - **When traffic conditions make it difficult to keep a proper distance between vehicles because of frequent acceleration or deceleration**
  - **Interference by other radar sources.**
- **Do not use the ICC system if you are towing a trailer. The system may not detect a vehicle ahead.**
- **In some road or traffic conditions, a vehicle or object can unexpectedly come into the sensor detection zone and cause automatic braking. Always stay alert and avoid using the ICC system where not recommended in this warning section.**

The radar sensor will not detect the following objects:

- Stationary and slow moving vehicles
- Pedestrians or objects in the roadway
- Oncoming vehicles in the same lane
- Motorcycles traveling offset in the travel lane

The following are some conditions in which the sensor cannot properly detect a vehicle ahead and the system may not operate properly:

- When snow or road spray from traveling vehicles reduces the sensor's detection.
- When excessively heavy baggage is loaded in the rear seat or the cargo area of your vehicle.

The ICC system is designed to automatically check the sensor's operation within the limitations of the system.

The detection zone of the ICC sensor is limited. A vehicle ahead must be in the detection zone for the vehicle-to-vehicle distance detection mode to maintain the selected distance from the vehicle ahead.

A vehicle ahead may move outside of the detection zone due to its position within the same lane of travel. Motorcycles may not be detected in the same lane ahead if they are traveling offset from the centerline of the lane. A vehicle that is entering the lane ahead may not be detected until the vehicle has completely moved into the lane.

If this occurs, the ICC system may warn you by blinking the system indicator and sounding the chime. The driver may have to manually control the proper distance away from the vehicle traveling ahead.

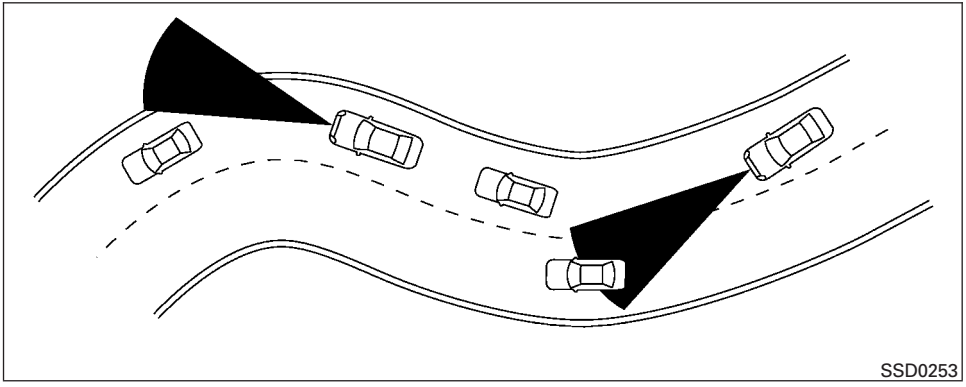

When driving on some roads, such as winding, hilly, curved, narrow roads, or roads which are under construction, the ICC sensor may detect vehicles in a different lane, or may temporarily not detect a vehicle traveling ahead. This may cause the ICC system to decelerate or accelerate the vehicle.

The detection of vehicles may also be affected by vehicle operation (steering maneuver or traveling position in the lane, etc.) or vehicle condition.

If this occurs, the ICC system may warn you by blinking the system indicator and sounding the chime unexpectedly. You will have to manually control the proper distance away from the vehicle traveling ahead.

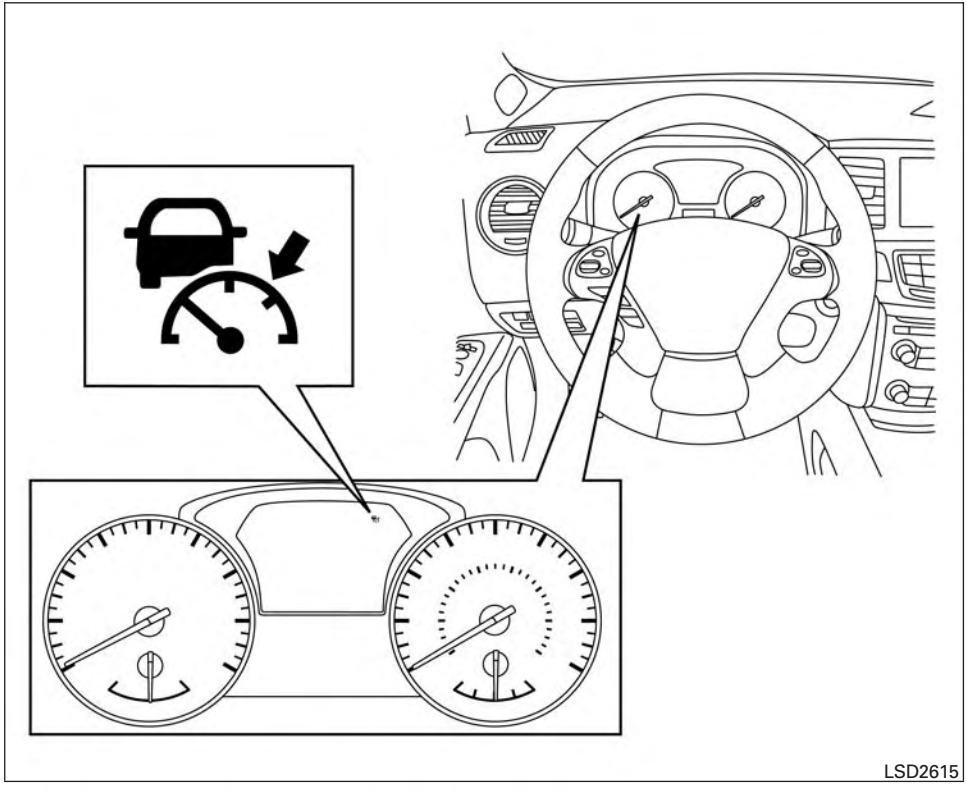

SYSTEM TEMPORARILY UNAVAILABLE

The following are conditions in which the ICC system may be temporarily unavailable. In these instances, the ICC system may not cancel and may not be able to maintain the selected following distance from the vehicle ahead.

Condition A

Under the following conditions, the ICC system is automatically canceled. A chime will sound and the system will not be able to be set:

- When the VDC system is turned off
- When the VDC or ABS operates
- When a vehicle ahead is not detected and your vehicle is traveling below the speed of 15 mph (24 km/h)
- When the system judges the vehicle is at a standstill
- When the shift lever is not in the D (Drive) or Manual mode
- When the parking brake is applied
- When a wheel slips

Action to take

When the conditions listed above are no longer present, turn the system off using the ICC CRUISE ON/OFF switch. Turn the ICC system back on to use the system.

Condition B

When the radar sensor area of the front bumper is covered with dirt or is obstructed, the ICC system will automatically be cancelled. If the sensor area is covered with ice, a transparent or translucent vinyl bag, etc., the ICC system may not detect vehicles ahead. In these instances, the ICC system may not cancel and may not be able to maintain the selected following distance from the vehicle ahead. Be sure to check and clean the sensor area.

The system warning light (orange) will illuminate and the “front radar obstruction” warning message will appear in the vehicle information display.

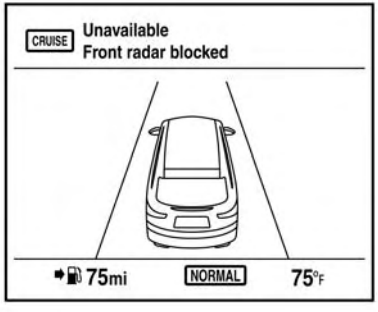

LSD2174

Action to take

If the warning light (orange) comes on, park the vehicle in a safe location and turn the engine off. Check to see if the radar sensor window is blocked. If the radar sensor window is blocked, remove the blocking material. Restart the engine. If the warning light continues to illuminate, have the ICC system checked. It is recommended that you visit an INFINITI retailer for this service.

Condition C

When the ICC system is not operating properly, a chime sounds and the system warning light (orange) will come on.

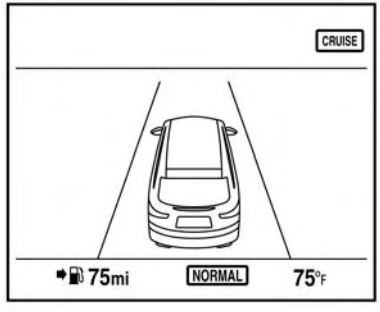

LSD2175

Action to take

If the warning light comes on, park the vehicle in a safe place. Turn the engine off, restart the engine, resume driving and set the ICC system again.

If it is not possible to set the system or the indicator stays on, it may indicate that the system is malfunctioning. Although the vehicle is still drivable under normal conditions, have the vehicle checked. It is recommended that you visit an INFINITI retailer for this service.

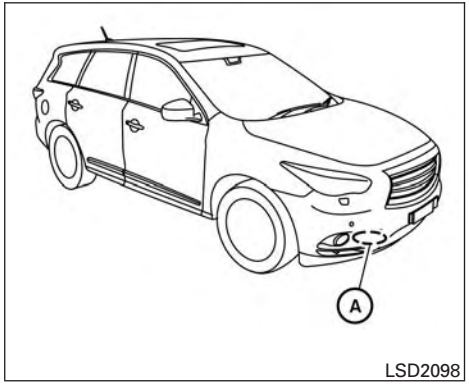

SYSTEM MAINTENANCE

The sensor for the ICC system Ⓐ is located on the front of the vehicle.

To keep the ICC system operating properly, be sure to observe the following:

- Always keep the sensor area clean.
- Do not strike or damage the areas around the sensor. Do not touch or remove the screw located on the sensor. Doing so could failure or malfunction. If the sensor is damaged due to an accident, it is recommended that you visit an INFINITI retailer.
- Do not attach a sticker (including transparent material) or install an accessory near the sensor. This could cause failure or malfunction.
- Do not attach metallic objects near the sensor area (brush guard, etc.) This could cause failure or malfunction.
- Do not alter, remove, or paint the front bumper. Before customizing or restoring the front bumper, it is recommended that you visit an INFINITI retailer.

Radio frequency statement

FCC Notice

For USA

This device complies with part 15 of the FCC Rules.

Operation is subject to the following two conditions:

1. This device may not cause harmful interference, and
2. This device must accept any interference received, including interference that may cause undesired operation.

FCC Warning

Changes or modifications not expressly approved by the party responsible for compliance could void the user's authority to operate the equipment.

For Canada

This device complies with Industry Canada license-exempt RSS standard(s). Operation is subject to the following two conditions:

1. This device may not cause inteference,
2. This device must accept any interference, including interference that may cause undesired operation of the device.

CONVENTIONAL (fixed speed) CRUISE CONTROL MODE

This mode allows driving at a speed between 20 to 90 mph (32 to 144 km/h) without keeping your foot on the accelerator pedal.

⚠ WARNING

- **In the conventional (fixed speed) cruise control mode, a warning chime does not sound to warn you if you are too close to the vehicle ahead, as neither the presence of the vehicle ahead nor the vehicle-to-vehicle distance is detected.**

- **Pay special attention to the distance between your vehicle and the vehicle ahead of you or a collision could occur.**
- **Always confirm the setting in the Intelligent Cruise Control system display.**
- **Do not use the conventional (fixed speed) cruise control mode when driving under the following conditions:**
  - **When it is not possible to keep the vehicle at a set speed**
  - **In heavy traffic or in traffic that varies in speed**
  - **On winding or hilly roads**
  - **On slippery roads (rain, snow, ice, etc.)**
  - **In very windy areas**
- **Doing so could cause a loss of vehicle control and result in an accident.**

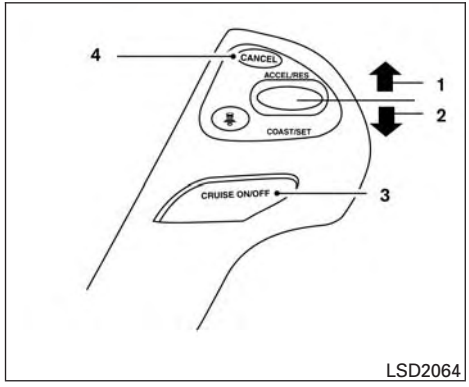

Conventional (fixed speed) cruise control switch

1. ACCEL/RES switch:

   Resumes set speed or increases speed incrementally.
2. COAST/SET switch:

   Sets the desired cruise speed, reduces speed incrementally.
3. CRUISE ON/OFF switch:

   Master switch to activate the system.
4. CANCEL switch:

   Deactivates the system without erasing the set speed.

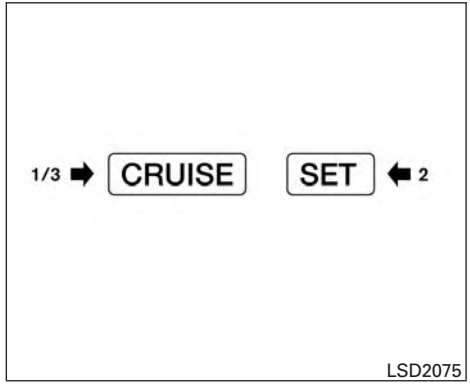

Conventional (fixed speed) cruise control mode display and indicators

The display is located between the speedometer and tachometer.

1. CRUISE ON/OFF switch indicator:

   Indicates that the CRUISE ON/OFF switch is on.
2. Cruise set switch indicator:

   Displays while the vehicle speed is controlled by the conventional (fixed speed) cruise control mode of the ICC system.
3. Cruise system warning light:

   Comes on if there is a malfunction in the cruise control system.

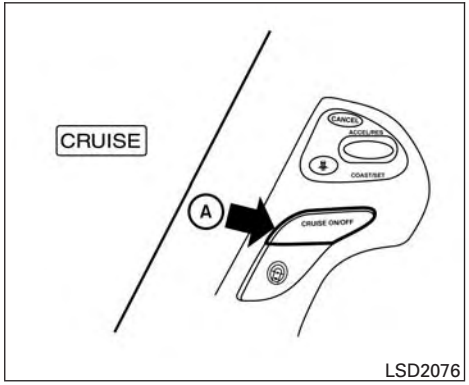

LSD2076

Operating conventional (fixed speed) cruise control mode

To turn on the conventional (fixed speed) cruise control mode, push and hold the CRUISE ON/OFF switch Ⓐ for longer than about 1.5 seconds.

When pushing the CRUISE ON/OFF switch on, the ICC system display and the CRUISE indicator are displayed in the vehicle information display. After you hold the CRUISE ON/OFF switch on for longer than about 1.5 seconds, the ICC system display goes out. The CRUISE indicator stays lit. You can now set your desired cruising speed. Pushing the CRUISE ON/OFF switch again will turn the system completely off.

When the ignition switch is pushed to the OFF position, the system is also automatically turned off. To use the ICC again, quickly push and release the CRUISE ON/OFF switch (vehicle-to-vehicle distance control mode) or push and hold it (conventional cruise control mode) again to turn it on.

When the Distance Control Assist (DCA) system is on, the conventional (fixed speed) cruise control mode cannot be turned on even though the CRUISE ON/OFF switch is pushed and held.

To turn on the conventional (fixed speed) cruise control mode, turn off the DCA system. For additional information, refer to “Distance Control Assist (DCA) system” in this section.

⚠ CAUTION

To avoid accidentally engaging cruise control, make sure to turn the ON/OFF switch off when not using the Intelligent Cruise Control.

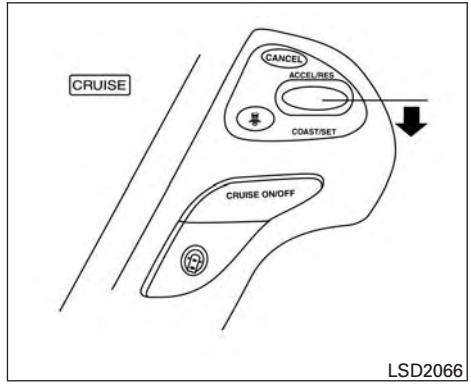

LSD2066

To set cruising speed, accelerate your vehicle to the desired speed, push the COAST/SET switch and release it. (The SET indicator will come on in the display.) Take your foot off the accelerator pedal. Your vehicle will maintain the set speed.

- **To pass another vehicle,** depress the accelerator pedal. When you release the pedal, the vehicle will return to the previously set speed.
- The vehicle may not maintain the set speed when going up or down steep hills. If this happens, manually maintain vehicle speed.

To cancel the preset speed, use any of the following three methods:

1. Press the CANCEL button. The SET indicator will go out.
2. Tap the brake pedal. The SET indicator will go out.
3. Turn the CRUISE ON/OFF switch off. Both the CRUISE indicator and SET indicator will go out.

To reset at a faster cruising speed, use one of the following three methods:

1. Depress the accelerator pedal. When the vehicle attains the desired speed, push and release the COAST/SET switch.
2. Push and hold the ACCEL/RES set switch. When the vehicle attains the speed you desire, release the switch.
3. Push, then quickly release the ACCEL/ RES switch. Each time you do this, the set speed will increase by about 1 mph (1.6 km/h).

To reset at a slower cruising speed, use one of the following three methods:

1. Lightly tap the brake pedal. When the vehicle attains the desired speed, push the COAST/SET switch and release it.
2. Push and hold the COAST/SET switch. Release the switch when the vehicle slows down to the desired speed.
3. Push, then quickly release the COAST/SET switch. Each time you do this, the set speed will decrease by about 1 mph (1.6 km/h).

To resume the preset speed, push and release the ACCEL/RES switch. The vehicle will resume the last set cruising speed when the vehicle speed is over 25 mph (40 km/h).

Automatic cancellation

Under the following condition, a chime will sound and the system control is automatically canceled.

- When the vehicle speed falls below approximately 20 mph (32 km/h)
- When the shift lever is not in the D (Drive) or Manual mode
- When the parking brake is applied
- When the VDC (including the TCS) operates
- When a wheel slips

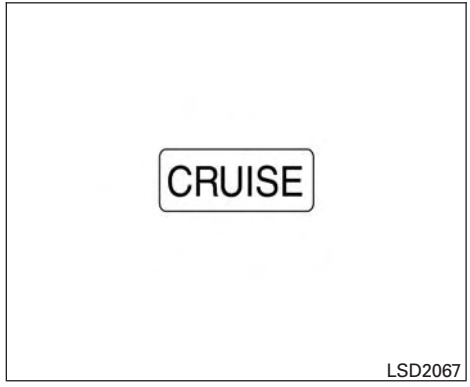

LSD2067

Warning light

When the system is not operating properly, the chime sounds and the system warning light (orange) will come on.

Action to take:

If the warning light comes on, park the vehicle in a safe place. Turn the engine off, restart the engine, resume driving and then perform the setting again.

If it is not possible to set or the indicator stays on, it may indicate that the system is malfunctioning. Although the vehicle is still driveable under normal conditions, have the vehicle checked. It is recommended that you visit an INFINITI retailer for this service.

PREVIEW FUNCTION

When the Preview Function identifies the need to apply emergency braking by sensing a vehicle ahead in the same lane and the distance and relative speed from it, it applies the brake pre-pressure before the driver depresses the brake pedal and helps improve brake response by reducing pedal free play.

- This system will not operate when the vehicle is moving at approximately 20 mph (32 km/h) or less.
- The pre-pressure function ceases when the following conditions are met:

1. When the driver depresses the accelerator pedal or the brake pedal.
2. If the driver does not operate the accelerator or brake pedal within approximately 1 second.

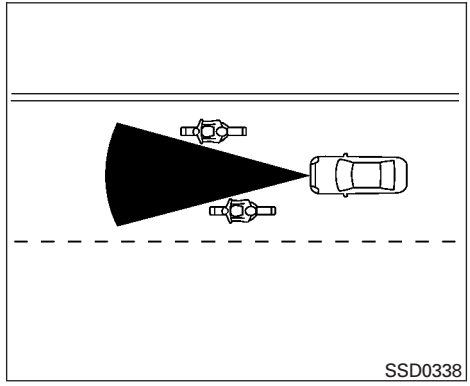

- The sensor will not detect:

1. Pedestrians or objects in the roadway
2. Oncoming vehicles in the same lane
3. Motorcycles traveling offset in the travel lane as illustrated

⚠ WARNING

- **This system is only an aid to assist braking operation and is not a collision warning or avoidance device. It is the driver's responsibility to stay alert, drive safely and be in control of the vehicle at all times.**
- **As there is a performance limit to the Preview Function, never rely solely on this system. This system does not correct careless inattentive or absent-minded driving, or overcome poor visibility in rain, fog, or other bad weather. Reduce vehicle speed by depressing the brake pedal, in order to maintain a safe distance between vehicles.**
- **The system may not detect the vehicle in front of you in certain road or weather conditions. The Preview Function may not operate properly under the following conditions. The vehicle is still driveable under normal conditions and the Brake Assist will operate.**
  - **When rain, snow or dirt adhere to the system sensor**
  - **When strong light (for example, at sunrise or sunset) is directly shining on the front of the vehicle**
  - **Winding or hilly roads may cause the sensor to temporarily not detect a vehicle in the same lane or may detect objects or vehicles in other lanes.**

– **Vehicle position in the lane may cause the sensor to temporarily not detect a vehicle in the same lane or may detect objects or vehicles in other lanes.**

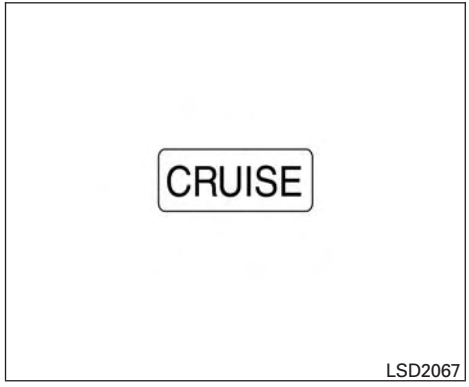

Warning light and display

When the Preview Function is not operating properly, the chime sounds and the system warning light (orange) will come on.

Action to take:

If the warning light comes on, park the vehicle in a safe place. Turn the engine off, restart the engine and resume driving.

If the indicator stays on, it may indicate that the Preview Function is malfunctioning (the brake is operative). Although the vehicle is still driveable under normal conditions, have the vehicle checked. It is recommended that you visit an INFINITI retailer for this service.

How to handle the sensor

The sensor for the Preview Function is common with the ICC and is located below the front bumper.

To keep the Preview Function operating properly, be sure to observe the following:

- Always keep the area around the sensor clean.
- Do not strike or damage the areas around the sensor.
- Do not touch or remove the screw located on the sensor. Doing so could cause failure or malfunction. If the sensor is damaged due to an accident, it is recommended that you visit an INFINITI retailer.
- Do not attach a sticker (including transparent material) or install an accessory near the sensor. This could cause failure or malfunction.

⚠ WARNING

Failure to follow the warnings and instructions for proper use of the DCA system could result in serious injury or death.

- **DCA helps maintain a distance to the vehicle in front under certain conditions. It is not a collision avoidance system. Failure to apply the brakes could result in an accident.**
- **Always drive carefully and attentively when using the DCA system. Read and understand the Owner's Manual thoroughly before using the DCA system. Do not use the DCA system except in appropriate road and traffic conditions.**
- **If the vehicle ahead comes to a stop, the vehicle decelerates to a standstill within the limitations of the system. The system will cancel once it judges that the vehicle has come to a standstill with a warning chime. To prevent the vehicle from moving, the driver must depress the brake pedal.**
- **The DCA system will not apply brake control while the driver's foot is on the accelerator pedal.**

The DCA system brakes and moves the accelerator pedal upward according to the distance from and the relative speed of the vehicle ahead to help assist the driver to maintain a following distance.

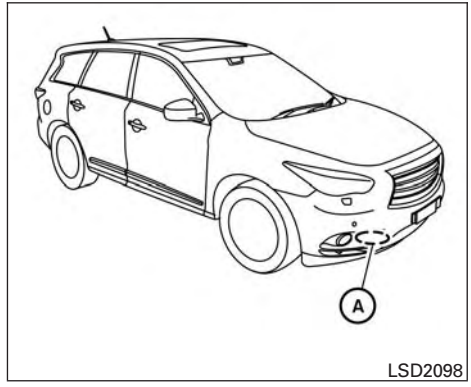

DCA SYSTEM OPERATION

Always pay attention to the operation of the vehicle and be ready to manually decelerate to maintain the proper following distance. The DCA system may not be able to decelerate the vehicle under some circumstances.

The DCA system uses a sensor Ⓐ located behind the front bumper of the vehicle to detect vehicles traveling ahead. The sensor generally detects the signals returned from the vehicle ahead. Therefore, if the sensor cannot detect the reflection from the vehicle ahead, the DCA system may not operate.

The system is intended to assist the driver to keep a following distance from the vehicle ahead traveling in the same lane and direction.

The distance sensor is located behind the front bumper Ⓐ. If the distance sensor Ⓐ detects a slower moving vehicle ahead, the system will reduce the vehicle speed to help assist the driver to maintain a following distance.

The system automatically controls the throttle and applies the brakes (up to 40% of vehicle braking power) if necessary.

The detection range of the sensor is approximately 490 ft (150 m) ahead.

The distance sensor will not detect the following objects.

- Stationary and slow moving vehicles
- Pedestrians or objects in the roadway
- Oncoming vehicles in the same lane

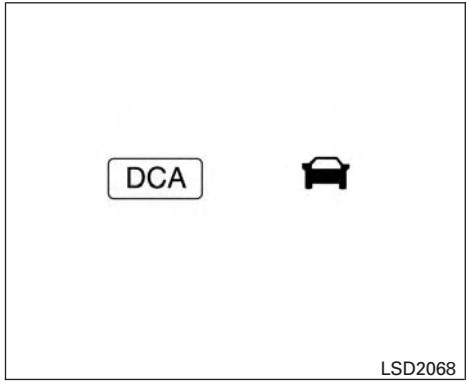

DCA Indicators

The display is located between the speedometer and tachometer.

1. DCA system switch indicator:

   Indicates that the dynamic driver assistance switch is on.

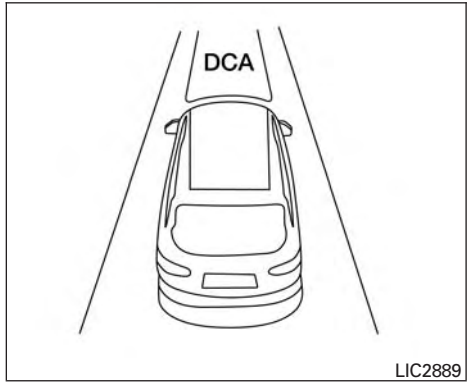

2. Vehicle ahead detection indicator:

   Indicates whether it detects a vehicle in front of you.

⚠ WARNING

The DCA system automatically decelerates your vehicle to help assist the driver to maintain a following distance from the vehicle ahead. Manually brake when deceleration is required to maintain a safe distance upon sudden braking by the vehicle ahead or when a vehicle suddenly appears in front of you. Always stay alert when using the DCA system.

The DCA system helps assist the driver to keep a following distance to the vehicle ahead by braking and moving the accelerator pedal upward in the normal driving condition.

When a vehicle is detected ahead:

The vehicle ahead detection indicator comes on.

When vehicle approaches a vehicle ahead:

- If the driver's foot is not on the accelerator pedal, the system activates the brakes to decelerate smoothly as necessary. If the vehicle ahead comes to a stop, the vehicle decelerates to a standstill within the limitations of the system.
- If the driver's foot is on the accelerator pedal, the system moves the accelerator pedal upward to assist the driver to release the accelerator pedal.

When brake operation by driver is required:

The system alerts the driver by a warning chime and blinking the vehicle ahead detection indicator. If the driver's foot is on the accelerator pedal after the warning, the system moves the accelerator pedal upward to assist the driver to switch to the brake pedal.

The stoplights of the vehicle come on when braking is performed by the DCA system.

When the brake operates, a noise may be heard. This is not a malfunction.

⚠ WARNING

- **When the vehicle ahead detection indicator light is not illuminated, the system will not control or warn the driver.**
- **Depending on the position of the accelerator pedal, the system may not be able to assist the driver to release the accelerator pedal appropriately.**
- **If the vehicle ahead comes to a standstill, the vehicle decelerates to a standstill within the limitations of the system. The system will release brake control with a warning chime once it judges the vehicle is at a standstill. To prevent the vehicle from moving, the driver must depress the brake pedal. (The system will resume control automatically once the system reaches 3 mph (5 km/h)).**

Overriding the system:

The following driver's operations override the system operation.

- When the driver depresses the accelerator pedal even further while the system is moving the accelerator pedal upward, the DCA system control of the accelerator pedal is canceled.
- When the driver's foot is on the accelerator pedal, the brake control by the system is not operated.
- When the driver's foot is on the brake pedal, neither the brake control nor the alert by the system operates.
- When the ICC system is set, the DCA system will be cancelled.

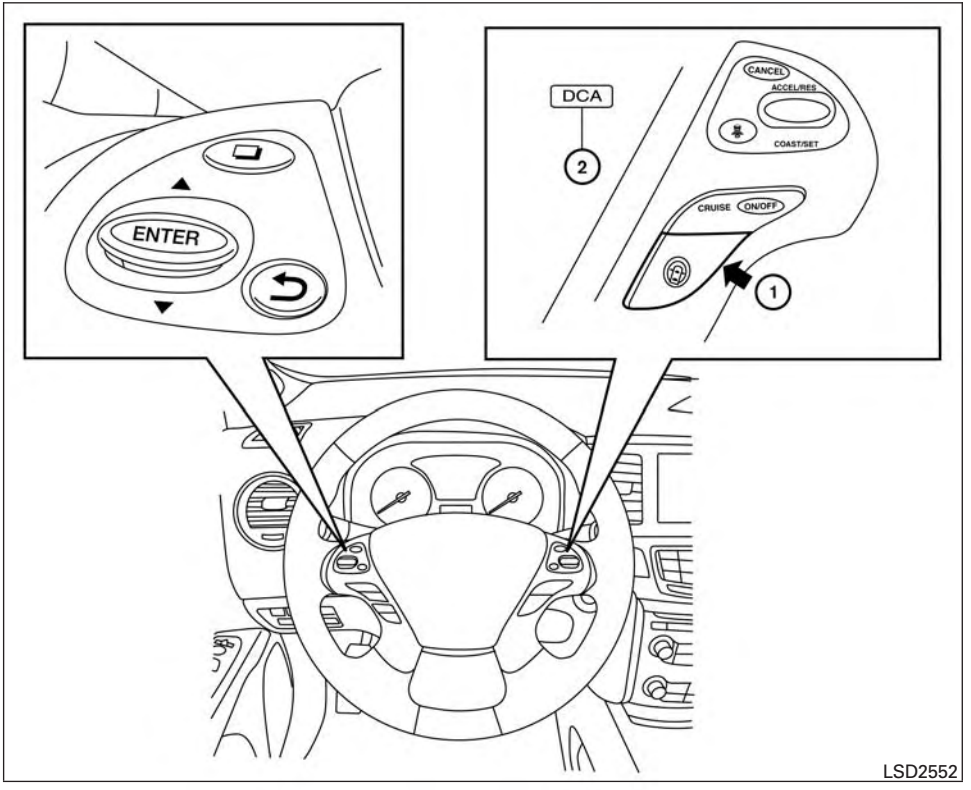

HOW TO ENABLE/DISABLE THE DCA SYSTEM

To turn on the DCA system, push the dynamic driver assistance switch ① on the steering wheel after starting the engine. The DCA system switch indicator light ② in the vehicle information display will illuminate. Push the dynamic driver assistance switch again to turn off the DCA system. The DCA system switch indicator light will turn off.

The system will start to operate after the vehicle speed becomes above approximately 3 mph (5 km/h).

The dynamic driver assistance switch is used for the LDP, DCA and BCI systems. When the dynamic driver assistance switch is pushed, the LDP system will also turn on or off simultaneously. The DCA system can be individually set to on or off on the display. If the system is set to off, the system will not turn on even if the dynamic driver assistance switch is pushed to on. To set the system to on or off on the display, refer to “Setting DCA system to ON/OFF” in this section.

Setting DCA system to ON/OFF:

The DCA can be turned on/off in the vehicle information display using the buttons on the steering wheel.

1. Press the button, and select the "Settings" using the button. Then press the ENTER button.
2. Select "Driving Aids", and press the ENTER button.
3. Select "Forward", and press the ENTER button.
4. To turn on the "Assistance (DCA)" check the box using the ENTER button.

If the LDP, BSI and DCA systems are set to off on the information display and the dynamic driver assistance switch is pushed, the LDP ON indicator light, BSI ON indicator light, and the DCA system switch indicator light will blink for approximately 2 seconds.

For additional information on LDP and BSI, refer to "Lane Departure Prevention (LDP) (if so equipped)" and "Blind Spot Intervention® (BSI) (if so equipped)" in this section.

DCA SYSTEM LIMITATIONS

WARNING

- **This system is only an aid to assist the driver and is not a collision warning or avoidance device. It is the driver's responsibility to stay alert, drive safely and be in control of the vehicle at all times.**
- **This system will not adapt automatically to road conditions.**
- **As there is a performance limit to the distance control function, never rely solely on the DCA system. This system does not correct careless, inattentive or absent-minded driving, or overcome poor visibility in rain, fog, or other bad weather. Decelerate the vehicle speed by depressing the brake pedal, depending on the distance to the vehicle ahead and the surrounding circumstances in order to maintain a safe distance between vehicles.**
- **The system may not detect the vehicle in front of you in certain road or weather conditions. To avoid accidents, never use the DCA system under the following conditions:**
  - **On roads with sharp curves**
  - **On slippery road surfaces such as on ice or snow, etc.**
  - **During bad weather (rain, fog, snow, etc.)**
  - **When rain, snow or dirt adhere to the sensor area of the front bumper**
  - **On steep downhill roads (frequent braking may result in overheating the brakes)**
  - **On repeated uphill and downhill roads**
- **Do not use the DCA system if you are towing a trailer. The system may not detect a vehicle ahead.**
- **In some road or traffic conditions, a vehicle or object can unexpectedly come into the sensor detection zone and cause automatic braking. You may need to control the distance from other vehicles using the accelerator pedal. Always stay alert and avoid using the DCA system where not recommended in this warning section.**

The following are some conditions in which the sensor cannot detect the signals:

- When the reflector of the vehicle ahead is covered with dirt, snow and road spray
- When dense exhaust or other smoke (black smoke) from vehicles reduces the sensor's detection
- When excessively heavy baggage is loaded in the rear seat or the luggage room of your vehicle

The DCA system is designed to automatically check the sensor's operation. When the front bumper area around the distance sensor is covered with dirt or is obstructed, the system will automatically cancel. If the front bumper area of the distance sensor is covered with ice, a transparent or translucent vinyl bag, etc., the DCA system may not detect them. In these instances, the vehicle-to-vehicle distance control mode may not cancel and may not be able to maintain the selected following distance from the vehicle ahead. Be sure to check and clean the front bumper area around the distance sensor regularly.

The DCA system is designed to help assist the driver to maintain a following distance from the vehicle ahead. The system will decelerate as necessary and if the vehicle ahead comes to a stop, the vehicle decelerates to a standstill. However, the DCA system can only apply up to 40% of the vehicle's total braking power. If a vehicle moves into the traveling lane ahead or if a vehicle traveling ahead rapidly decelerates, the distance between vehicles may become closer because the DCA system cannot decelerate the vehicle quickly enough. If this occurs, the DCA system will sound a warning chime and blink the system display to notify the driver to take necessary action.

For additional information, refer to "Approach warning" in this section.

This system only brakes and moves the accelerator pedal upward to help assist the driver to maintain a following distance from the vehicle ahead. Acceleration should be operated by the driver.

The DCA system does not control vehicle speed or warn you when you approach stationary and slow moving vehicles. You must pay attention to vehicle operation to maintain proper distance from vehicles ahead.

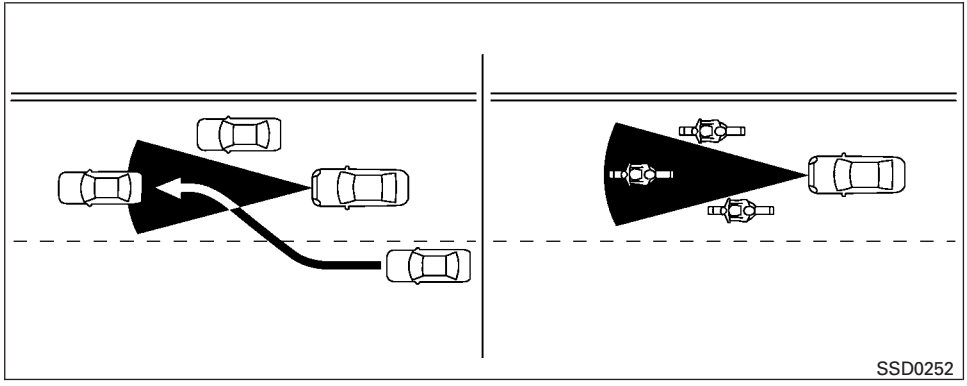

DCA Detection Zone

DCA DRIVING SITUATIONS

The detection zone of the sensor is limited. A vehicle ahead must be in the detection zone for the system to operate.

A vehicle ahead may move outside of the detection zone due to its position within the same lane of travel. Motorcycles may not be detected in the same lane ahead if they are traveling offset from the centerline of the lane. A vehicle that is entering the lane ahead may not be detected until the vehicle has completely moved into the lane. **If this occurs, the system may warn you by blinking the system indicator and sounding the chime. The driver may have to manually control the proper distance away from the vehicle traveling ahead.**

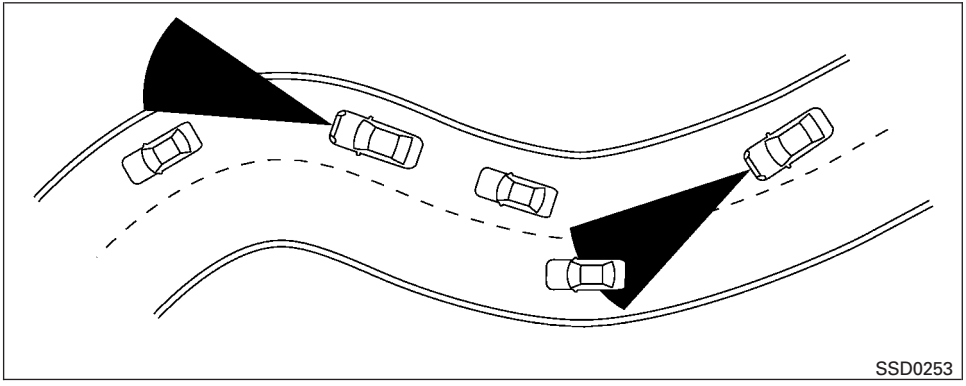

DCA Detection Zones On Winding Roads

When driving on some roads, such as winding, hilly, curved, narrow roads, or roads which are under construction, the sensor may detect vehicles in a different lane, or may temporarily not detect a vehicle traveling ahead. This may cause the system to work inappropriately.

The detection of vehicles may also be affected by vehicle operation (steering maneuver or traveling position in the lane, etc.) or vehicle condition. **If this occurs, the system may warn you by blinking the system indicator and sounding the chime unexpectedly. You will have to manually control the proper distance away from the vehicle traveling ahead.**

Approach warning

If your vehicle comes closer to the vehicle ahead due to rapid deceleration of that vehicle or if another vehicle cuts in, the system warns the driver with the chime and DCA system display. Decelerate by depressing the brake pedal to maintain a safe vehicle distance if:

- The chime sounds.
- The vehicle ahead detection indicator blinks.

The warning chime may not sound in some cases when there is a short distance between vehicles. Some examples are:

- When the vehicles are traveling at the same speed and the distance between vehicles is not changing
- When the vehicle ahead is traveling faster and the distance between vehicles is increasing
- When a vehicle cuts in near your vehicle

The warning chime will not sound when your vehicle approaches vehicles that are parked or moving slowly.

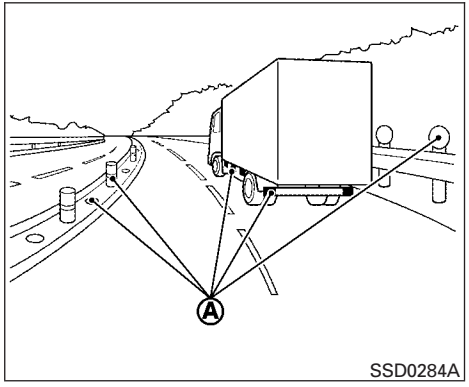

SSD0284A

NOTE:

The approach warning chime may sound and the system display may blink when ICC sensor detects vehicles in other lanes Ⓐ or objects on the side of the road Ⓐ. This may cause the DCA system to operate inappropriately. The ICC sensor may detect these objects when the vehicle is driven on winding roads, narrow roads, hilly roads or when entering or exiting a curve. In these cases you will have to manually control the proper distance ahead of your vehicle.

Also, the sensor sensitivity can be affected by vehicle operation (steering maneuver or driving position in the lane) or traffic or vehicle condition (for example, if a vehicle is being driven with some damage).

LSD2080

SYSTEM TEMPORARILY UNAVAILABLE

Under the following conditions, the DCA system will not operate and the DCA cancellation message will pop up:

- When the SNOW mode switch is ON (To use the DCA system, turn off the SNOW mode switch, then turn on the dynamic driver assistance switch.)

  For additional information about the SNOW mode switch, refer to “Snow mode” in this section.

- When the VDC system is off (To use the DCA system, turn on the VDC, then push the dynamic driver assistance switch.)

  For additional information about the VDC system, refer to “Vehicle Dynamic Control (VDC) system” in this section.

- When ABS or VDC (including the TCS) is operating

When the Conventional (fixed speed) cruise control mode is operating, the DCA system will not operate. (To use the DCA system, turn the Conventional (fixed speed) cruise control mode off, then push the dynamic driver assistance switch.)

For additional information about the Conventional (fixed speed) cruise control mode, refer to “Intelligent Cruise Control (ICC)” in this section.

When the engine is turned off, the system is automatically turned off.

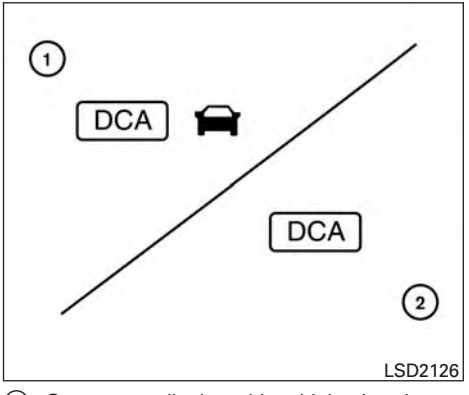

① System set display with vehicle ahead

② System set display without vehicle ahead

Automatic cancellation

Condition A:

Under the following conditions, the DCA system is automatically canceled. The chime will sound and the DCA cancellation message will display.

- When the VDC system is turned off
- When the VDC or ABS operates
- When SNOW mode is selected by using the INFINITI drive mode selector

Action to take:

When the conditions listed above are no longer present, turn the system off with the dynamic driver assistance switch. Turn the DCA system back on to use the system.

Condition B:

When the sensor area of the front bumper is dirty, making it impossible to detect a vehicle ahead, the DCA system is automatically canceled.

The chime sounds and the system warning light (orange) will come on and the “Sensor Blocked” indicator will appear.

Action to take:

If the warning light comes on, park the vehicle in a safe place, turn the engine off. Clean the sensor area of the bumper and then perform the settings again.

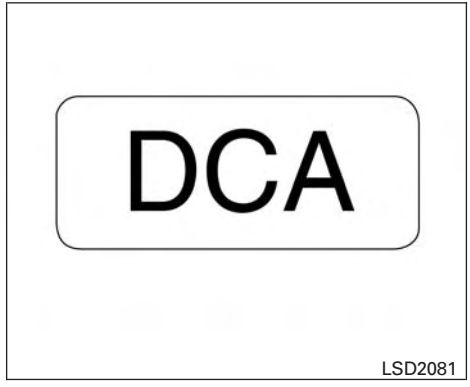

DCA warning light (orange)

Condition C:

When the DCA system is not operating properly, the chime sounds and the system warning light (“DCA” orange) will come on.

Action to take:

If the warning light comes on, park the vehicle in a safe place. Turn the engine off, restart the engine, and turn on the DCA system again.

If it is not possible to set the system or the indicator stays on, it may indicate that the system is malfunctioning. Although the vehicle is still driveable under normal conditions, have the vehicle checked. It is recommended that you visit an INFINITI retailer for this service.

SYSTEM MAINTENANCE

The sensor for the DCA system is common with ICC and is located behind the front bumper.

For additional information, refer to “Intelligent Cruise Control (ICC)” in this section.

FORWARD EMERGENCY BRAKING (FEB) (if so equipped)

⚠ WARNING

Failure to follow the warnings and instructions for proper use of the FEB system could result in serious injury or death.

- **The FEB system is a supplemental aid to the driver. It is not a replacement for the driver's attention to traffic conditions or responsibility to drive safely. It cannot prevent accidents due to carelessness or dangerous driving techniques.**
- **The FEB system does not function in all driving, traffic, weather and road conditions.**

The FEB system can assist the driver when there is a risk of a forward collision with the vehicle ahead in the traveling lane.

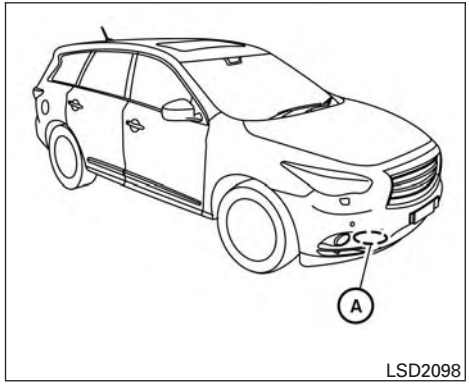

The FEB system uses a radar sensor Ⓐ located behind the lower grille of the front bumper to measure the distance to the vehicle ahead in the same lane.

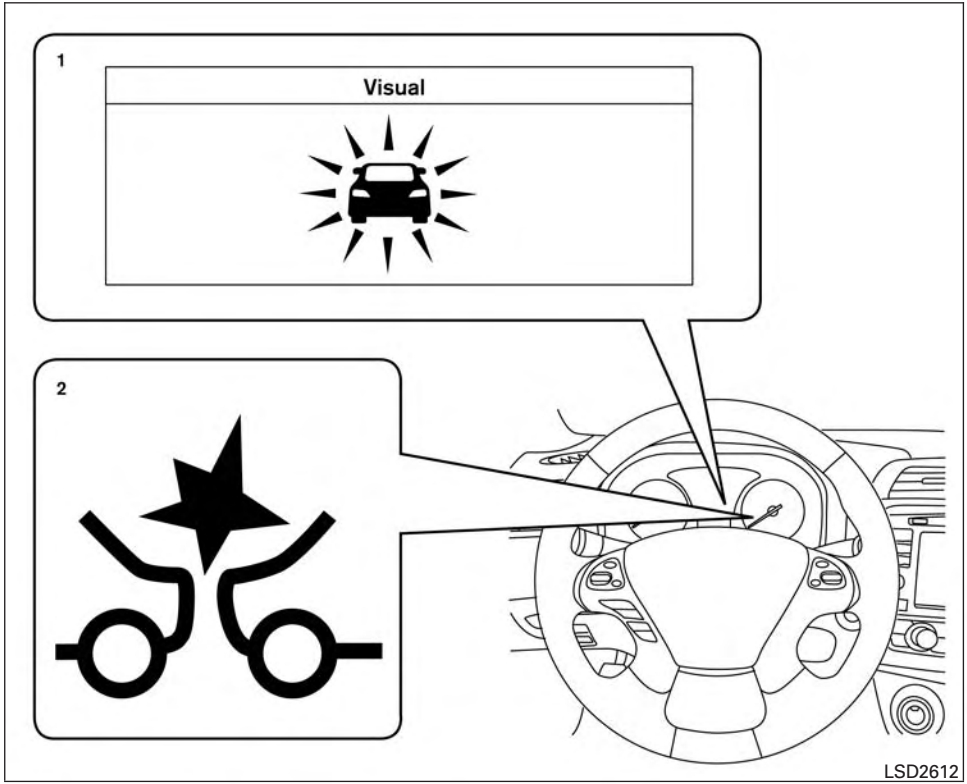

1. Vehicle ahead detection indicator
2. FEB system warning light

FEB SYSTEM OPERATION

The FEB system will function when your vehicle is driven at speeds above approximately 3 mph (5 km/h).

If a risk of a forward collision is detected, the FEB system will provide an initial warning to the driver by both a visual and audible alert.

If the driver applies the brakes quickly and forcefully after the warning, and the FEB system detects that there is still the possibility of a forward collision, the system will automatically increase the braking force. If the driver does not take action, the FEB system issues the second visual warning (red) and audible warning and also applies partial braking.

If the risk of a collision becomes imminent, the FEB system applies harder braking automatically.

NOTE:

The vehicle's brake lights come on when braking is performed by the forward emergency braking system.

Depending on vehicle speed and distance to the vehicle ahead, as well as driving and roadway conditions, the system may help the driver avoid a forward collision or may help mitigate the consequences of a collision, should one be unavoidable. If the driver is handling the steering wheel, accelerating or braking, the FEB system will function later or will not function.

The automatic braking will cease under the following conditions:

- When the steering wheel is turned as far as necessary to avoid a collision.
- When the accelerator pedal is depressed.
- When there is no longer a vehicle detected ahead.

If the FEB system has stopped the vehicle, the vehicle will remain at a standstill for approximately 2 seconds before the brakes are released.

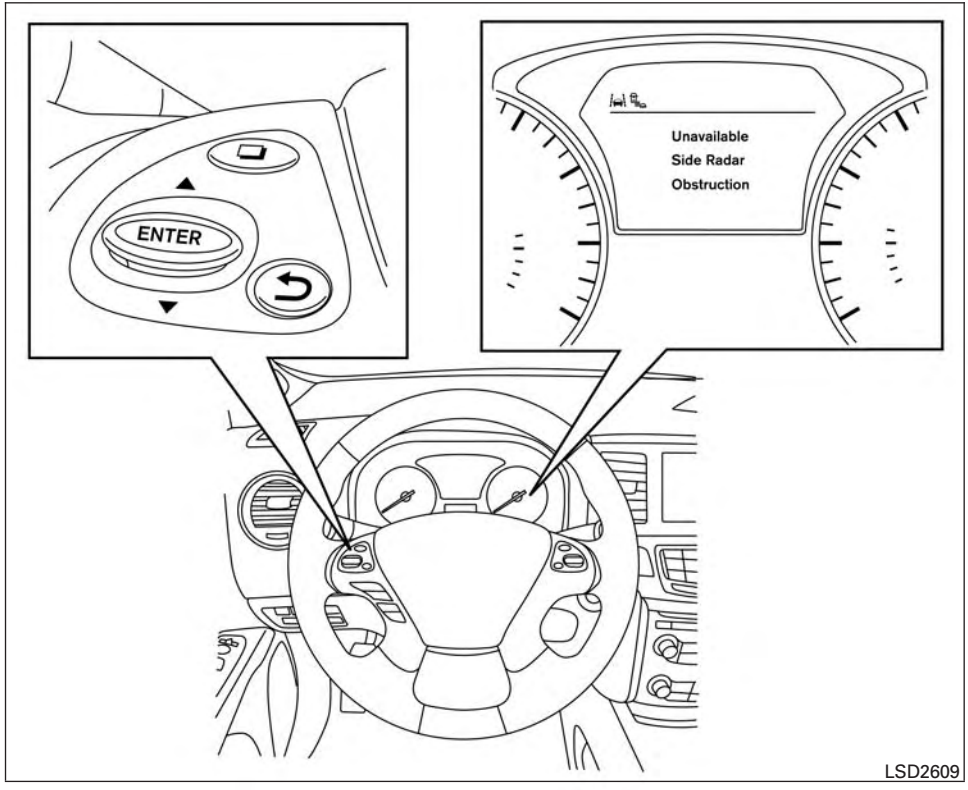

TURNING THE FEB SYSTEM ON/OFF

When the FEB system is enabled in the vehicle information display, the system can be turned off temporarily by pushing the warning systems switch. For additional information, refer to “Warning systems switch” in the “Instruments and controls” section of this manual.

Perform the following steps to turn the FEB systems ON or OFF.

1. Press the button until “Settings” displays in the vehicle information display and then press ENTER button. Use the button to select “Driver Assistance”. Then press the ENTER button.
2. Select “Emergency Braking” and press the ENTER button.
3. Select “System” and press the ENTER button.

When the FEB system is turned off, the FEB system warning light illuminates.

NOTE:

- The FEB system will be automatically turned on when the engine is restarted.
- The PFCW system (if so equipped) is integrated into the FEB system. There is not a separate selection in the vehicle information display for the PFCW system. When the FEB is turned off, the PFCW system is also turned off.

FEB SYSTEM LIMITATIONS

WARNING

Listed below are the system limitations for the FEB system. Failure to operate the vehicle in accordance with these system limitations could result in serious injury or death.

- **The FEB system cannot detect all vehicles under all conditions.**
- **The radar sensor does not detect the following objects:**
  - **Pedestrians, animals or obstacles in the roadway.**
  - **Oncoming vehicles.**
  - **Crossing vehicles.**
- **The radar sensor has some performance limitations. If a stationary vehicle is in the vehicles’s path, the FEB system will not function when the vehicle is driven at speeds over approximately 50 mph (80 km/h).**
- **The radar sensor may not detect a vehicle ahead in the following conditions:**
  - **Dirt, ice, snow or other material covering the radar sensor.**
  - **Interference by other radar sources.**
  - **Snow or road spray from traveling vehicles.**
  - **If the vehicle ahead is narrow (e.g. motorcycle).**
  - **When driving on a steep downhill slope or roads with sharp curves.**
- **In some road or traffic conditions, the FEB system may unexpectedly apply partial braking. When acceleration is necessary, continue to depress the accelerator pedal to override the system.**
- **Braking distances increase on slippery surfaces.**

- **The system is designed to automatically check the sensor's functionality, within certain limitations. The system may not detect some forms of obstructions of the sensor area such as ice, snow, stickers, etc. In these cases, the system may not be able to worn the driver properly. Be sure that you check, clean and clear the sensor area regularly.**
- **Excessive noise will interfere with the warning chime sound, and the chime may not be heard.**

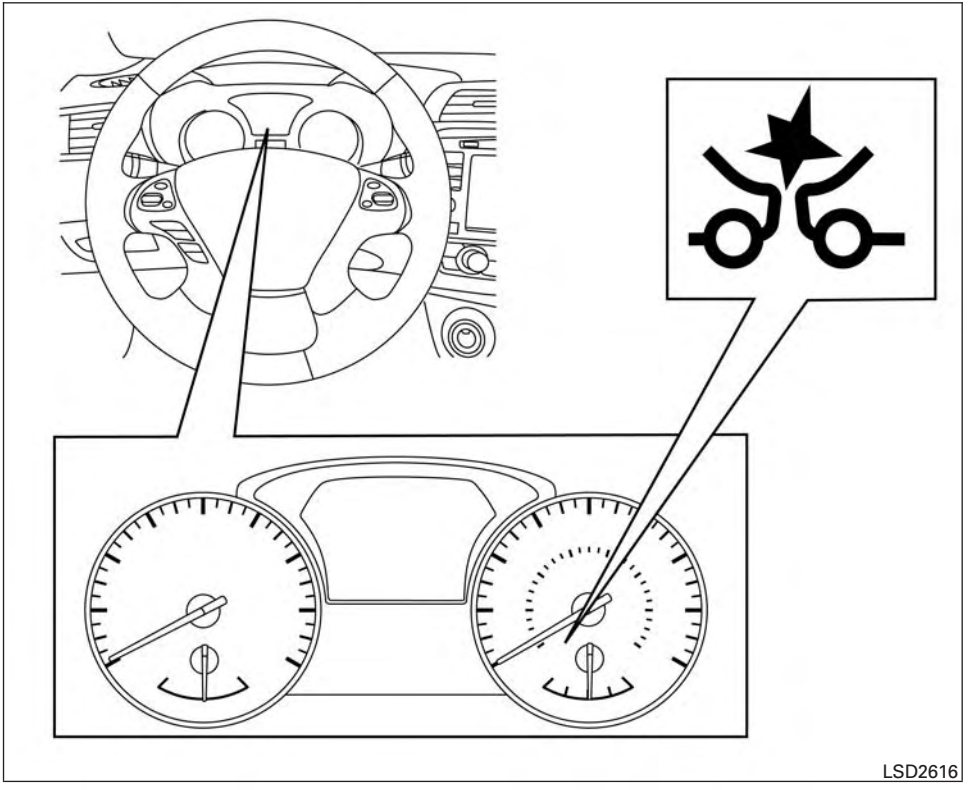

SYSTEM TEMPORARILY UNAVAILABLE

Condition A

When the radar sensor picks up interference from another radar source, making it impossible to detect a vehicle ahead, the FEB system is automatically turned off.

The FEB system warning light (orange) will illuminate.

Action to take

When the above conditions no longer exist, the FEB system will resume automatically.

Condition B

When the sensor area of the front bumper is covered with dirt or is obstructed, making it impossible to detect a vehicle ahead, the FEB system is automatically turned off.

The FEB system warning light (orange) will illuminate and the “front radar obstruction” warning message will appear in the vehicle information display.

Action to take

If the warning light (orange) comes on, stop the vehicle in a safe place, place the shift lever in the P (Park) position and turn the engine off. Clean the radar cover on the lower grille with a soft cloth, and restart the engine. If the warning light continues to illuminate, have the FEB system checked. It is recommended that you visit an INFINITI retailer for this service.

NOTE:

If the FEB system stops working, the PFCW system (if so equipped) will also stop working.

SYSTEM MALFUNCTION

If the FEB system malfunctions, it will be turned off automatically, a chime will sound, the FEB warning light (orange) will illuminate and the warning message [Malfunction] will appear in the vehicle information display.

Action to take

If the warning light (orange) comes on, stop the vehicle in a safe location, turn the engine off and restart the engine. If the warning light continues to illuminate, have the FEB systems checked. It is recommended that you visit an INFINITI retailer for this service.

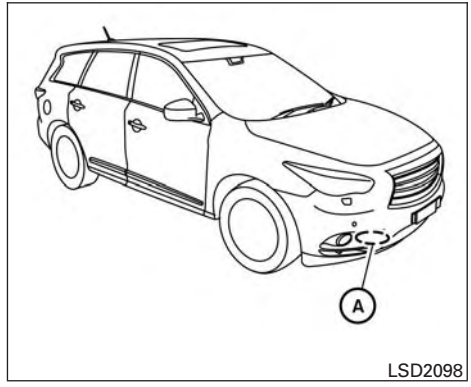

SYSTEM MAINTENANCE

The radar sensor Ⓐ is located behind the lower grille of the front bumper.

To keep the system operating properly, be sure to observe the following:

- Always keep the sensor area of the front bumper clean.
- Do not strike or damage the areas around the sensor.
- Do not cover or attach stickers or similar objects on the front bumper near the sensor area. This could cause failure or malfunction.

- Do not attach metallic objects near the sensor area (brush guard, etc.). This could cause failure or malfunction.
- Do not alter, remove or paint the front bumper. Before customizing or restoring the front bumper, it is recommended that you visit an INFINITI retailer.

FCC Notice

For USA

This device complies with Part 15 of the FCC Rules. Operation is subject to the following two conditions:

1. **This device may not cause harmful interference, and**
2. **This device must accept any interference received, including interference that may cause undesired operation.**

FCC Warning

Changes or modification not expressly approved by the party responsible for compliance could void the user's authority to operate the equipment.

For Canada

This device complies with Industry Canada licence-exempt RSS standard(s). Operation is subject to the following two conditions:

1. **This device may not cause interference,**
2. **This device must accept any interference, including interference that may cause undesired operation of the device.**

PEDESTRIAN FORWARD EMERGENCY BRAKING (PFEB) SYSTEM (if so equipped)

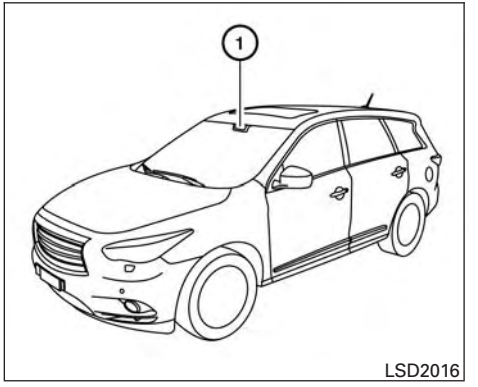

LSD2016

WARNING

Failure to follow the warnings and instructions for proper use of the PFEB system could result in serious injury or death.

- **The PFEB system is a supplemental aid to the driver. It is not a replacement for the driver's attention to traffic conditions or responsibility to drive safely. It cannot prevent accidents due to carelessness or dangerous driving techniques.**
- **The PFEB system does not function in all driving, traffic, weather and road conditions.**

The PFEB system can assist the driver when there is a risk of a forward collision with the vehicle ahead or pedestrian in the travelling lane.

The PFEB system detects a vehicle ahead and pedestrian using a multi-sensing front camera ① located on the upper side of the windshield.

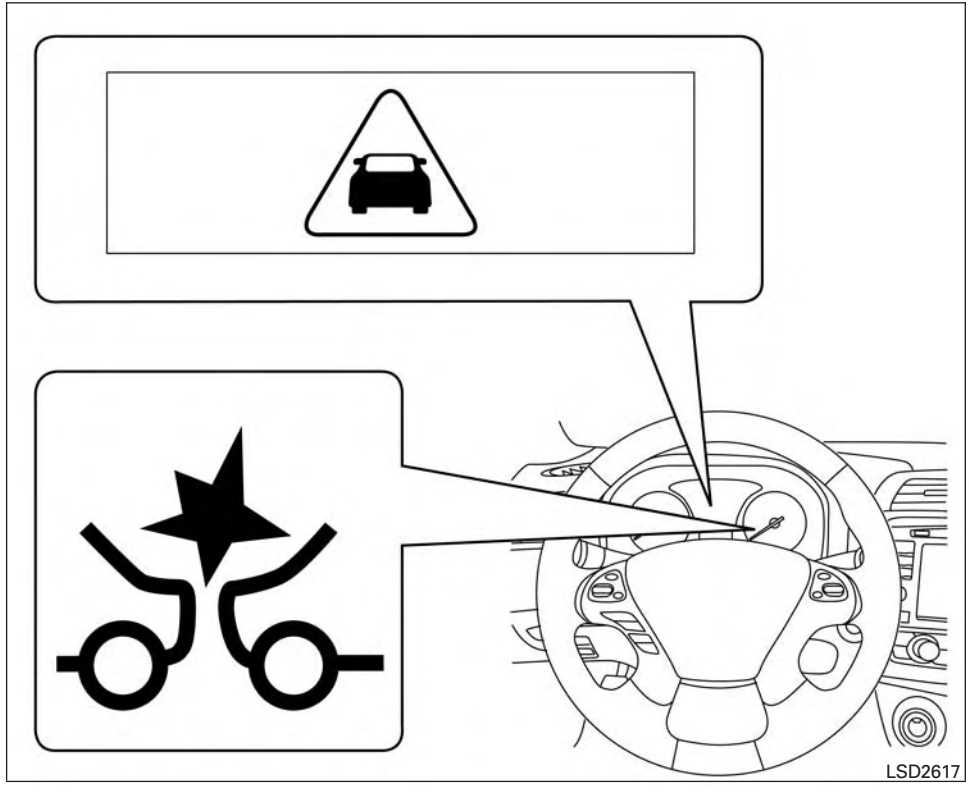

SYSTEM OPERATION

The PFEB system operates when vehicle speed is within the range of approximately 5 to 50 mph (10 to 80 km/h).

(The system will not activate for a stationary vehicle or a pedestrian when the vehicle is driven at speeds faster than approximately 37 mph (60 km/h).)

If a risk of a forward collision is detected, the PFEB system will provide the first warning to the driver by flashing the warning light, providing an audible warning and applying partial braking.

If the driver's collision avoidance operation is not sufficient and the risk of collision is increased, the system issues the second visual warning and audible warning, and applies harder braking immediately before the collision.

NOTE:

The vehicle's stop lights come on when braking is performed by the PFEB system.

Depending on vehicle speed and distance to the vehicle ahead or pedestrian, as well as driving and roadway conditions, the system may help the driver avoid a forward collision or may help mitigate the consequences if a collision should one be unavoidable.

If the driver is handling the steering wheel, accelerating or braking, the PFEB system will function later or will not function.

The automatic braking will cease under the following conditions:

- When the steering wheel is turned as far as necessary to avoid a collision.
- When the accelerator pedal is depressed.
- When there is no longer a vehicle or a pedestrian detected ahead.

If the PFEB system has stopped the vehicle, the vehicle will remain at a standstill for approximately 2 seconds before the brakes are released.

PFEB SYSTEM LIMITATIONS

⚠ WARNING

- **The multi-sensing front camera unit does not detect the following objects:**
  - **Children and other people who are of short stature, animals, and bicycles**
  - **Pedestrians walking at night or in dark areas such as tunnels**
  - **Oncoming vehicles**
  - **Crossing vehicles**
  - **Vehicles parked diagonally**
- **The multi-sensing front camera unit may not detect a vehicle or pedestrian ahead in the following conditions:**
  - **Visibility is poor because of bad weather conditions such as rain, snow, fog, dust storms, sandstorms, and snowstorms.**
  - **Snow, sand or road spray from traveling vehicles.**
  - **The windshield glass in front of the camera is covered with dirt, water drops, ice, snow, etc.**
  - **The windshield glass in front of the camera is fogged up.**
  - **Strong light (for example, sunlight or high beams from oncoming vehicles) enters from the front.**
  - **The headlights did not illuminate during the nighttime or in a tunnel, or the headlight lenses are extremely dirty.**
  - **Both tail lights of the vehicle ahead do not illuminate at night or inside a tunnel.**

- When a sudden change in brightness occurs. (For example, when the vehicle enters or exits a tunnel or a shaded area.)
- On roads where there are sharp curves.
- The vehicle drives on a slope where the gradient changes.
- The vehicle drives on a bumpy road surface, such as an uneven dirt road.
- The system cannot recognize the outline of a person because the pedestrian is carrying large luggage or is wearing clothes that are the same color as the background.

- Depending on the ambient noise, the audible warning may not be heard.
- In the following conditions, the system may not be able to function normally:
  - The vehicle is driven on a slippery road.
  - The vehicle drives on a slope.
  - When excessively heavy baggage is loaded in the rear seat or the luggage room of your vehicle.

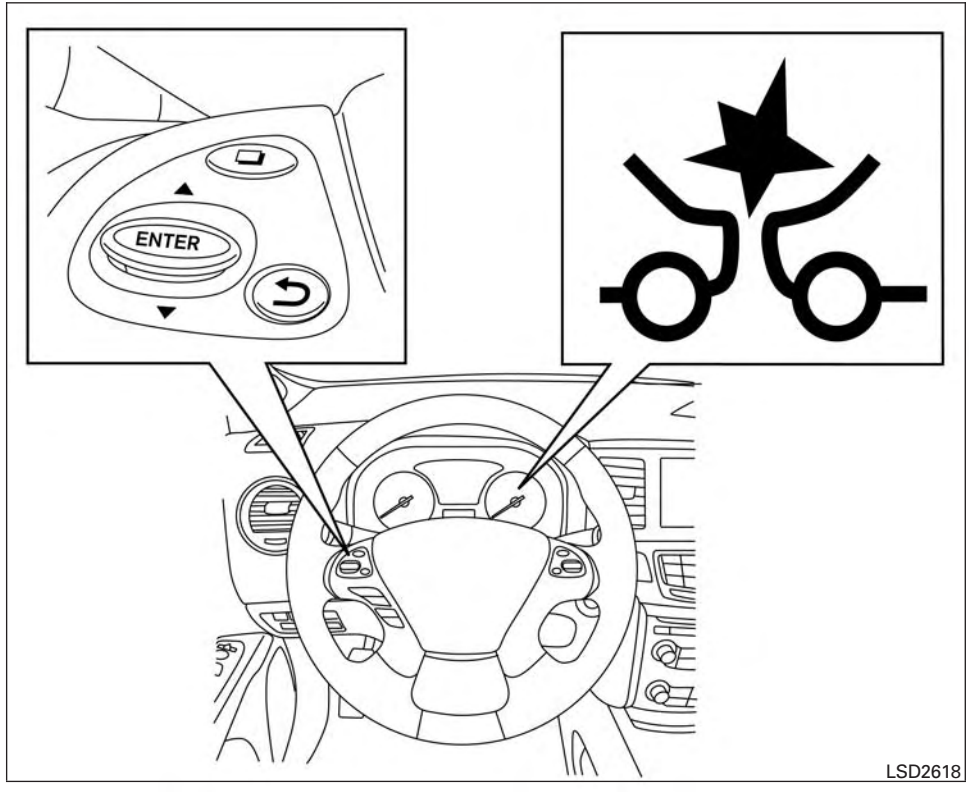

TURNING THE PFEB SYSTEM ON/OFF

The PFEB system can be turned on or off using the warning systems switch on the instrument panel or “Settings” in the vehicle information display.

When the system is off, the indicator light on the switch turns off and the FEB system warning light will illuminate.

The PFEB system will be automatically turned ON when the engine is restarted.

Using the PFEB system/ emergency assist for pedal misapplication system switch:

To turn the system on or off, push the warning systems switch on the instrument panel. The ignition switch must be in the “ON” position when turning on or off the system.

Using “Settings” in the vehicle information display:

1. Press the button until “Settings” displays in the vehicle information display. Use the button to select “Driver Assistance”. Then press the ENTER button.
2. Select “Emergency Braking” and press the ENTER button.
3. Select “System” and press the ENTER button to turn the system ON or OFF.

When the PFEB system is turned off, the FEB system warning light illuminates.

NOTE:

- The FEB system will be automatically turned on when the engine is restarted.

SYSTEM TEMPORARILY UNAVAILABLE

In the following conditions, the FEB system warning light blinks and the system will be turned off automatically:

– The multi-sensing front camera unit cannot recognize the front view because the windshield glass is covered with dirt, etc.

– The multi-sensing front camera unit cannot recognize the front view because strong light is shining from the front.

– The temperature of the multi-sensing front camera unit is high because the vehicle is parked under the direct sunlight. (When the interior temperature is reduced, the system will resume operating automatically.)

SYSTEM MALFUNCTION

If the PFEB system malfunctions, it will be turned off automatically, the FEB system warning light will illuminate and the system malfunction warning message will appear in the vehicle information display.

Action to take:

If the warning light illuminates, park the vehicle in a safe location, turn the engine off and restart the engine. If the warning light continues to illuminate, have the PFEB system checked. It is recommended that you visit an INFINITI retailer for this service.

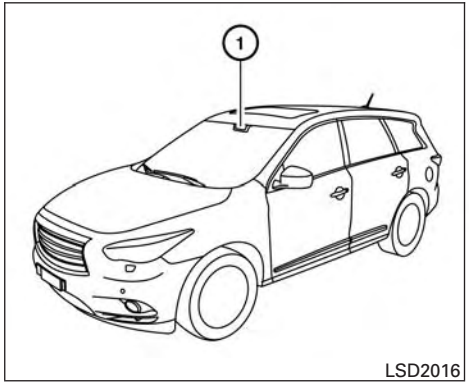

SYSTEM MAINTENANCE

The multi-sensing front camera unit ① for the PFEB system is located on the upper side of the windshield. To maintain the proper operation of the PFEB system and prevent a system malfunction, be sure to observe the following:

- Always keep the windshield clean.
- Do not attach a sticker (including transparent material) or install an accessory near the multi-sensing front camera unit.
- Do not place reflective materials, such as white paper or a mirror, on the instrument panel. The reflection of sunlight may adversely affect the multi-sensing front camera unit's detection capability.
- Do not strike or damage the areas around the camera unit. Do not touch the camera lens or remove the screw located on the camera unit. If the camera unit is damaged due to an accident, it is recommended that you visit an INFINITI retailer.

⚠ WARNING

Failure to follow the warnings and instructions for proper use of the PFCW system could result in serious injury or death.

- **The PFCW system can help warn the driver before a collision occurs but will not avoid a collision. It is the driver's responsibility to stay alert, drive safely and be in control of the vehicle at all times.**

The PFCW system can help alert the driver when there is a sudden braking of a second vehicle traveling in front of the vehicle ahead in the same lane.

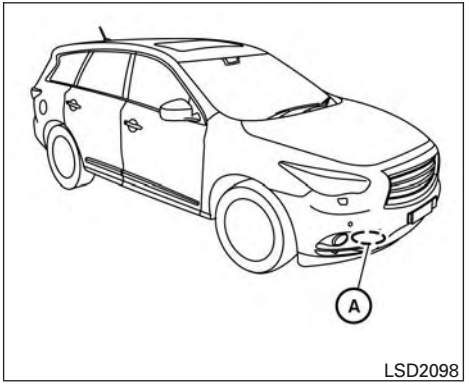

The PFCW system uses a radar sensor Ⓐ located behind the lower grille of the front bumper to measure the distance to the vehicle ahead in the same lane.

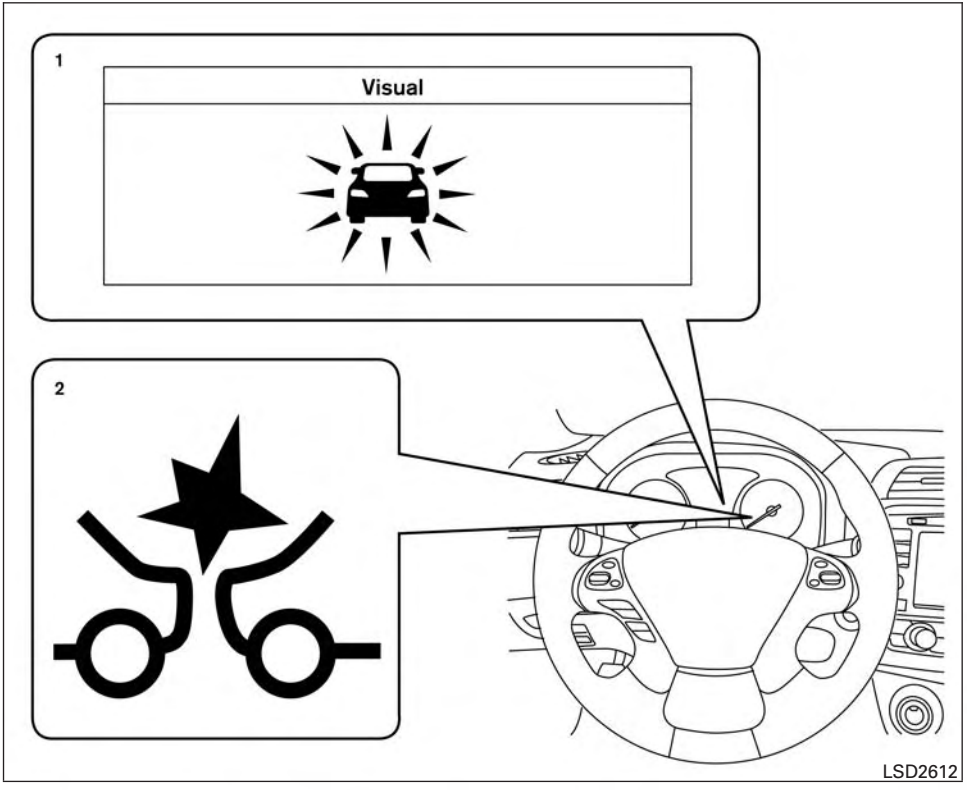

1. Vehicle ahead detection indicator
2. FEB system warning light

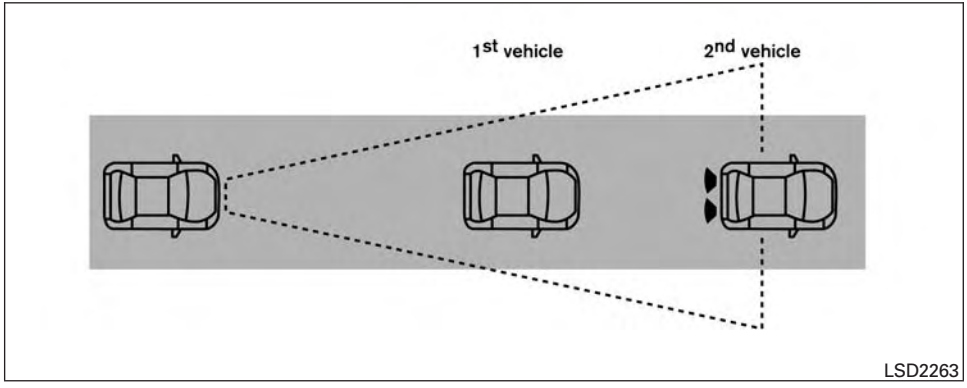

PFCW SYSTEM OPERATION

The PFCW system operates at speeds above approximately 3 mph (5 km/h).

If there is a potential risk of a forward collision, the PFCW system will warn the driver by blinking the vehicle ahead detection indicator, and sounding an audible alert.

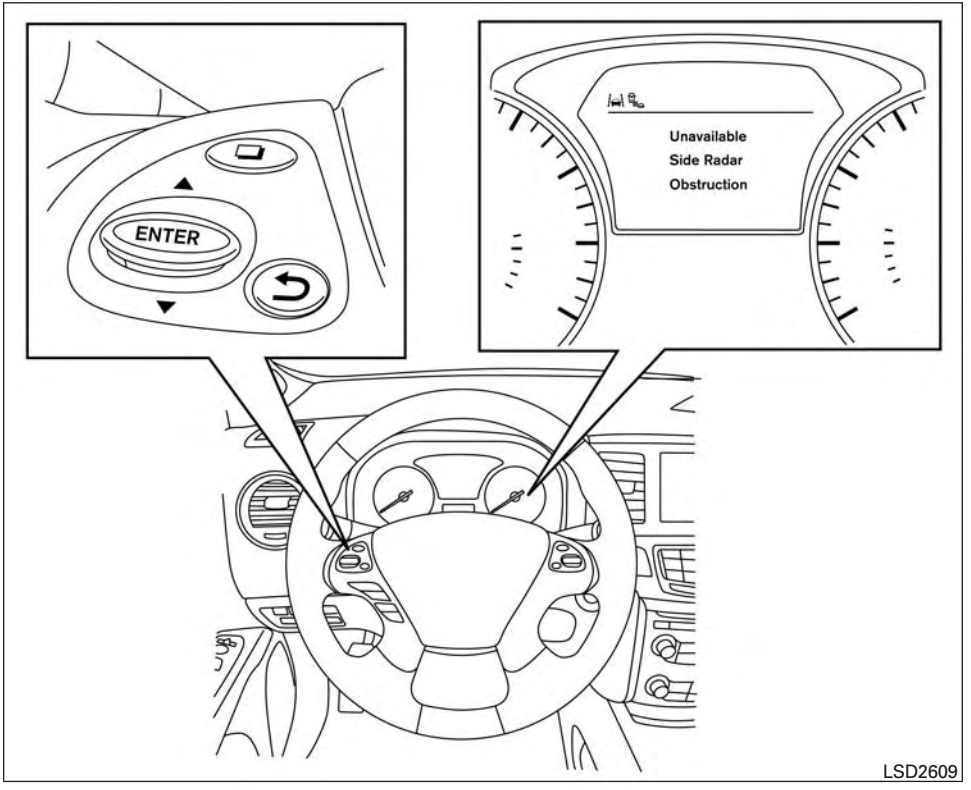

TURNING THE PFCW SYSTEM ON/OFF

When the PFCW system is enabled in the vehicle information display, the system can be turned off temporarily by pushing the warning systems switch. For additional information, refer to “Warning systems switch” in the “Instruments and controls” section of this manual.

Perform the following steps to turn the PFCW system ON or OFF.

1. Press the button until “Settings” displays in the vehicle information display and then press the ENTER button. Use the button to select “Driver Assistance”. Then press the ENTER button.
2. Select “Driving Aids” and press the ENTER button.
3. Select “Forward” and press the ENTER button.
4. Select “Warning (FCW)” and press the ENTER button.

When the PFCW system is turned off, the FEB system warning light illuminates.

NOTE:

- The PFCW system will be automatically turned on when the engine is restarted.
- The PFCW system (if so equipped) is integrated into the FEB system. There is not a separate selection in the vehicle information display for the PFCW system. When the FEB is turned off, the PFCW system is also turned off.

PFCW SYSTEM LIMITATIONS

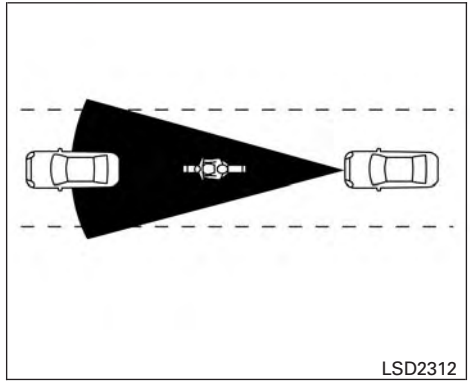

Illustration A

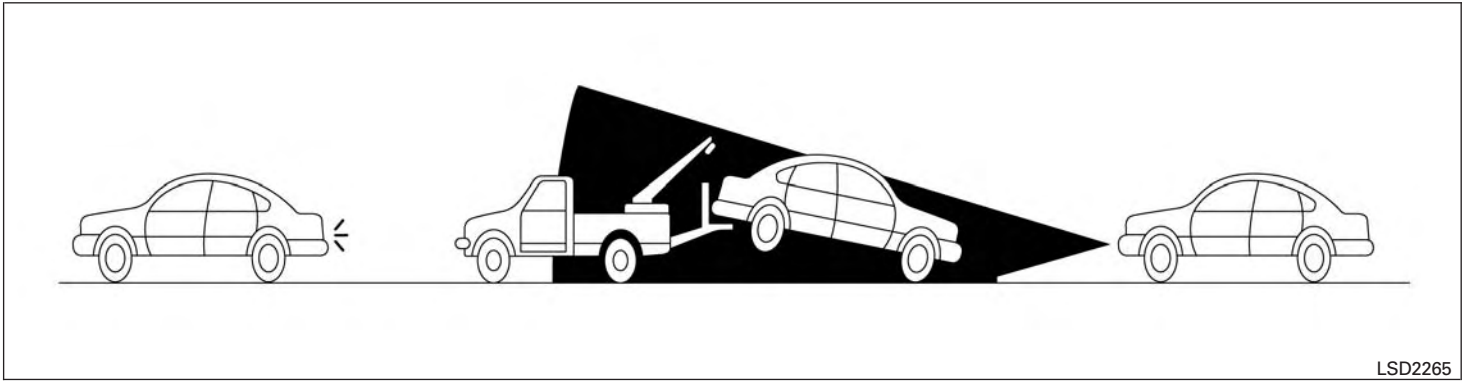

Illustration B

⚠WARNING

Listed below are the system limitations for the PFCW system. Failure to operate the vehicle in accordance with these system limitations could result in serious injury or death.

- **The PFCW system cannot detect all vehicles under all conditions.**
- **The radar sensor does not detect the following objects:**
  - **Pedestrians, animals or obstacles in the roadway**
  - **Oncoming vehicles**
  - **Crossing vehicles**
- **(Illustration A) The PFCW system does not function when a vehicle ahead is a narrow vehicle, such as a motorcycle.**
- **The radar sensor may not detect a vehicle ahead in the following conditions:**
  - **Snow or heavy rain**
  - **Dirt, ice, snow or other material covering the radar sensor.**
  - **Interference by other radar sources.**
  - **Snow or road spray from traveling vehicles.**
  - **Driving in a tunnel**
  - **(Illustration B) When the vehicle ahead is being towed.**
  - **(Illustration C) When the distance to the vehicle ahead is too close, the beam of the radar sensor is obstructed.**
  - **(Illustration D) When driving on a steep downhill slope or roads with sharp curves.**

- **The system is designed to automatically check the sensor's functionality, within certain limitations. The system may not detect some forms of obstruction of the sensor area such as ice, snow, stickers, etc. In these cases, the system may not be able to warn the driver properly. Be sure that you check, clean and clear the sensor area regularly.**
- **Excessive noise will interfere with the warning chime sound, and the chime may not be heard.**

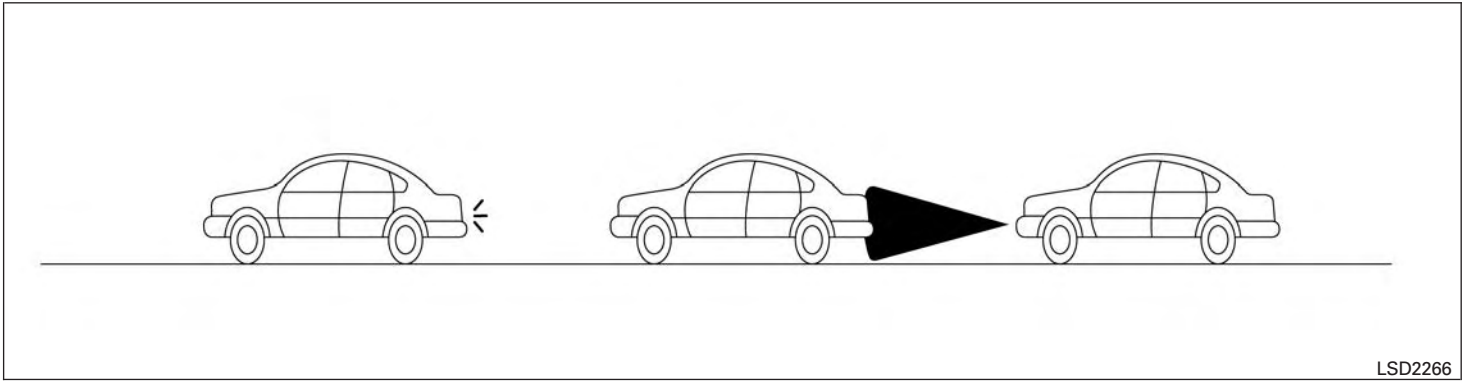

Illustration C

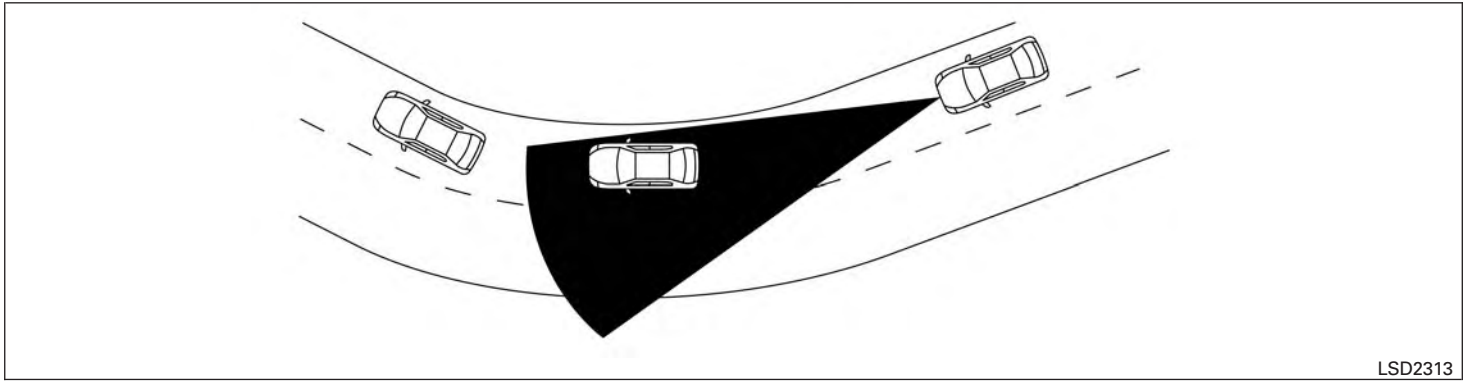

Illustration D

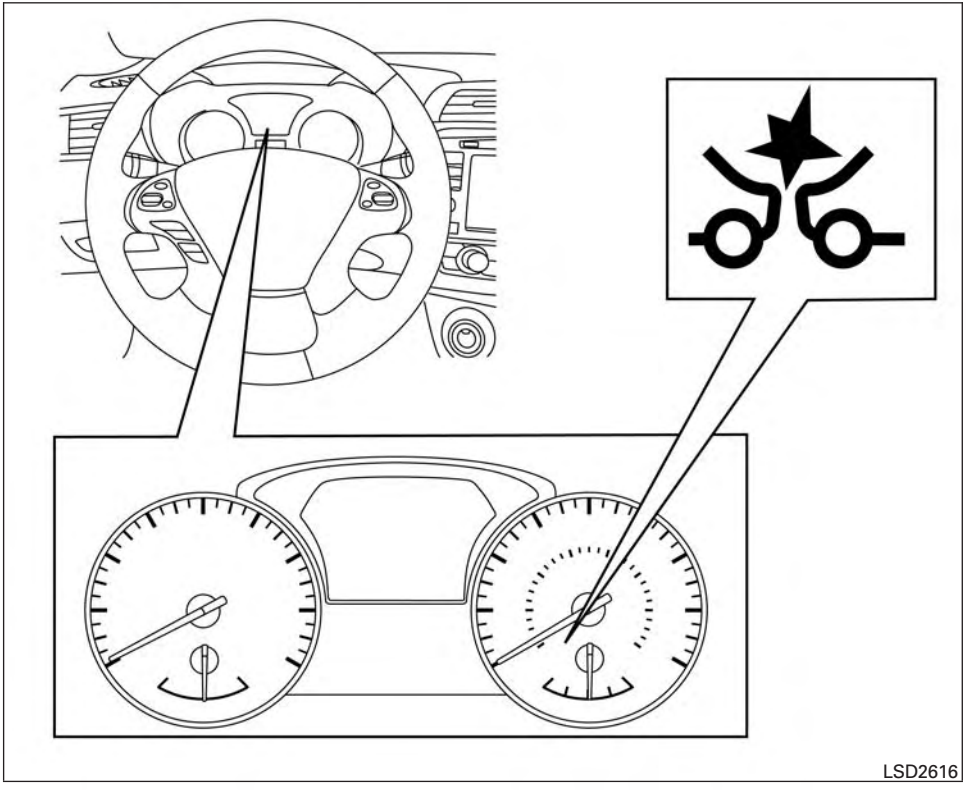

SYSTEM TEMPORARILY UNAVAILABLE

Condition A

When the radar sensor picks up interference from another radar source, making it impossible to detect a vehicle ahead, the PFCW system is automatically turned off.

The FEB system warning light (orange) will illuminate.

Action to take

When the above conditions no longer exist, the PFCW system will resume automatically.

Condition B

When the sensor area of the front bumper is covered with dirt or is obstructed, making it impossible to detect a vehicle ahead, the PFCW system is automatically turned off.

The FEB system warning light (orange) will illuminate and the “front radar obstruction” warning message will appear in the vehicle information display.

Action to take

If the warning light (orange) comes on, stop the vehicle in a safe place, place the shift lever in the P (Park) position and turn the engine off. Clean the radar cover on the lower grille with a soft cloth, and restart the engine. If the warning light continues to illuminate, have the PFCW system checked. It is recommended that you visit an INFINITI retailer for this service.

NOTE:

If the FEB system stops working, the PFCW system (if so equipped) will also stop working.

SYSTEM MALFUNCTION

If the PFCW system malfunctions, it will be turned off automatically, a chime will sound, the FEB system warning light (orange) will illuminate and the warning message [Malfunction] will appear in the vehicle information display.

Action to take

If the warning light (orange) comes on, stop the vehicle in a safe location, turn the engine off and restart the engine. If the warning light continues to illuminate, have the PFCW system checked. It is recommended that you visit an INFINITI retailer for this service.

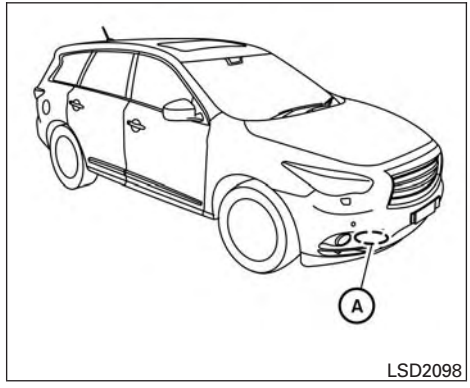

LSD2098

SYSTEM MAINTENANCE

The sensor Ⓐ is located behind the lower grille of the front bumper.

To keep the system operating properly, be sure to observe the following:

- Always keep the sensor area of the front bumper clean.
- Do not strike or damage the areas around the sensor.
- Do not cover or attach stickers or similar objects on the front bumper near the sensor area. This could cause failure or malfunction.
- Do not attach metallic objects near the sensor area (brush guard, etc.). This could cause failure or malfunction.
- Do not alter, remove or paint the front bumper. Before customizing or restoring the front bumper, it is recommended that you visit an INFINITI retailer.

FCC Notice

For USA

This device complies with Part 15 of the FCC Rules. Operation is subject to the following two conditions:

1. **This device may not cause harmful interference, and**
2. **This device must accept any interference received, including interference that may cause undesired operation.**

FCC Warning

Changes or modification not expressly approved by the party responsible for compliance could void the user's authority to operate the equipment.

For Canada

This device complies with Industry Canada licence-exempt RSS standard(s). Operation is subject to the following two conditions:

1. **This device may not cause interference,**
2. **This device must accept any interference, including interference that may cause undesired operation of the device.**

BREAK-IN SCHEDULE

⚠ CAUTION

During the first 1,200 miles (2,000 km), follow these recommendations to obtain maximum engine performance and ensure the future reliability and economy of your new vehicle. Failure to follow these recommendations may result in shortened engine life and reduced engine performance.

- Avoid driving for long periods at constant speed, either fast or slow, and do not run the engine over 4,000 RPM.
- Do not accelerate at full throttle in any gear.
- Avoid quick starts.
- Avoid hard braking as much as possible.
- Do not tow a trailer for the first 500 mi (805 km). Your engine, axle or other parts could be damaged.

FUEL EFFICIENT DRIVING TIPS

Follow these easy-to-use Fuel Efficient Driving Tips to help you achieve the most fuel economy from your vehicle.

1. **Use Smooth Accelerator and Brake Pedal Application**
   - Avoid rapid starts and stops.
   - Use smooth, gentle accelerator and brake application whenever possible.
   - Maintain constant speed while commuting and coast whenever possible.
2. **Maintain Constant Speed**
   - Look ahead to try and anticipate and minimize stops.
   - Synchronizing your speed with traffic lights allows you to reduce your number of stops.
   - Maintaining a steady speed can minimize red light stops and improve fuel efficiency.
3. **Use Air Conditioning (A/C) at Higher Vehicle Speeds**
   - Below 40 mph (64 km/h), it is more efficient to open windows to cool the vehicle due to reduced engine load.

- Above 40 mph (64 km/h), it is more efficient to use A/C to cool the vehicle due to increased aerodynamic drag.
- Recirculating the cool air in the cabin when the A/C is on reduces cooling load.

4. **Drive at Economical Speeds and Distances**
   - Observing the speed limit and not exceeding 60 mph (97 km/h) (where legally allowed) can improve fuel efficiency due to reduced aerodynamic drag.
   - Maintaining a safe following distance behind other vehicles reduces unnecessary braking.
   - Safely monitoring traffic to anticipate changes in speed permits reduced braking and smooth acceleration changes.
   - Select a gear range suitable to road conditions.
5. **Use Cruise Control**
   - Using cruise control during highway driving helps maintain a steady speed.
   - Cruise control is particularly effective in providing fuel savings when driving on flat terrains.
6. **Plan for the Shortest Route**
   - Utilize a map or navigation system to determine the best route to save time.
7. **Avoid Idling**
   - Shutting off your engine when safe for stops exceeding 30–60 seconds saves fuel and reduces emissions.
8. **Buy an Automated Pass for Toll Roads**
   - Automated passes permit drivers to use special lanes to maintain cruising speed through the toll and avoid stopping and starting.
9. **Winter Warm Up**
   - Limit idling time to minimize impact to fuel economy.
   - Vehicles typically need no more than 30 seconds of idling at start-up to effectively circulate the engine oil before driving.
   - Your vehicle will reach its ideal operating temperature more quickly while driving versus idling.
10. **Keeping your Vehicle Cool**
    - Park your vehicle in a covered parking area or in the shade whenever possible.
    - When entering a hot vehicle, opening the windows will help to reduce the inside temperature faster, resulting in reduced demand on your A/C system.

INCREASING FUEL ECONOMY

- Keep your engine tuned up.
- Follow the recommended scheduled maintenance.
- Keep the tires inflated to the correct pressure. Low tire pressure increases tire wear and lowers fuel economy.
- Keep all the wheels in correct alignment. Improper alignment increases tire wear and lowers fuel economy.
- Use the recommended viscosity engine oil. For additional information, refer to “Engine oil and oil filter recommendations” in the “Technical and consumer information” section of this manual.

INTELLIGENT ALL-WHEEL DRIVE (AWD) (if so equipped)

If any malfunction occurs in the Intelligent AWD system while the engine is running, messages are displayed in the meter.

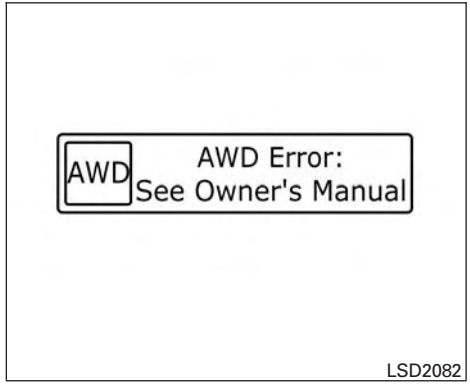

If the AWD error warning message is displayed, there may be a malfunction in the Intelligent AWD system. Reduce vehicle speed and have your vehicle checked as soon as possible. It is recommended that you visit an INFINITI retailer for this service.

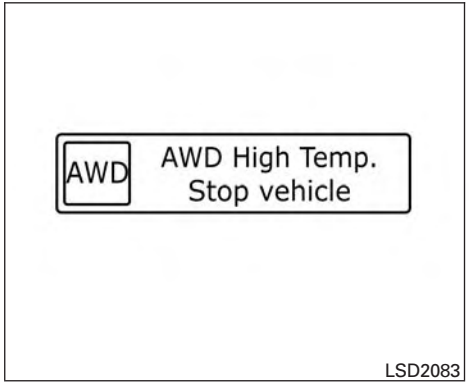

LSD2083

The AWD high temperature message may be displayed while trying to free a stuck vehicle due to increased oil temperature. The driving mode may change to 2-wheel drive. If this message is displayed, stop the vehicle with the engine idling, as soon as it is safe to do so. Then if the message turns off, you can continue driving.

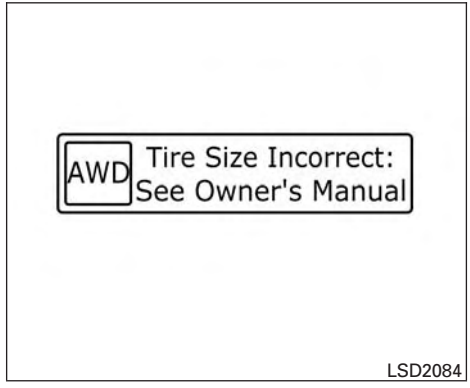

LSD2084

The tire size message may be displayed if there is a large difference between the diameters of front and rear wheels. Pull off the road in a safe area, with the engine idling. Check that all tire sizes are the same, that the tire pressure is correct and that the tires are not excessively worn.

If any warning messages continue to be displayed, have your vehicle checked as soon as possible. It is recommended that you visit an INFINITI retailer for this service.

WARNING

- **Do not drive beyond the performance capability of the tires. Accelerating quickly, sharp steering maneuvers or sudden braking may cause loss of control, even with Intelligent AWD engaged.**
- **For AWD equipped vehicles, do not attempt to raise two wheels off the ground and shift the transmission to any drive or reverse position with the engine running. Doing so may result in drivetrain damage or unexpected vehicle movement which could result in serious personal injury or vehicle damage.**

- **Do not attempt to test an AWD equipped vehicle on a 2-wheel dynamometer (such as the dynamometers used by some states for emissions testing) or similar equipment even if the other two wheels are raised off the ground. Make sure that you inform the test facility personnel that your vehicle is equipped with AWD before it is placed on a dynamometer. Using the wrong test equipment may result in drivetrain damage or unexpected vehicle movement which could result in serious personal injury or vehicle damage.**

⚠ CAUTION

- **Do not operate the engine on a free roller when any of the wheels are raised.**
- **If you use the free roller, rotate four wheels with the same speed without raising any wheels.**

- **If an AWD warning message is displayed while driving there may be a malfunction in the AWD system. Reduce the vehicle speed immediately and have your vehicle checked as soon as possible. It is recommended that you visit an INFINITI retailer for this service.**
- **The powertrain may be damaged if you continue driving when the AWD temperature or tire size incorrect messages are displayed**
- **If the AWD high temperature message is displayed while you are driving, pull off the road in a safe area, and idle the engine. The driving mode will change to 2WD to prevent the AWD system from malfunctioning. If the warning message turns off, you can drive again.**
- **If the tire size incorrect message is displayed while you are driving, pull off the road in a safe area with the engine idling. Check that all tire sizes are the same, that the tire pressure is correct and that the tires are not excessively worn.**

- **If a warning message continues to be displayed after the above operations, have your vehicle checked as soon as possible. It is recommended that you visit an INFINITI retailer for this service.**

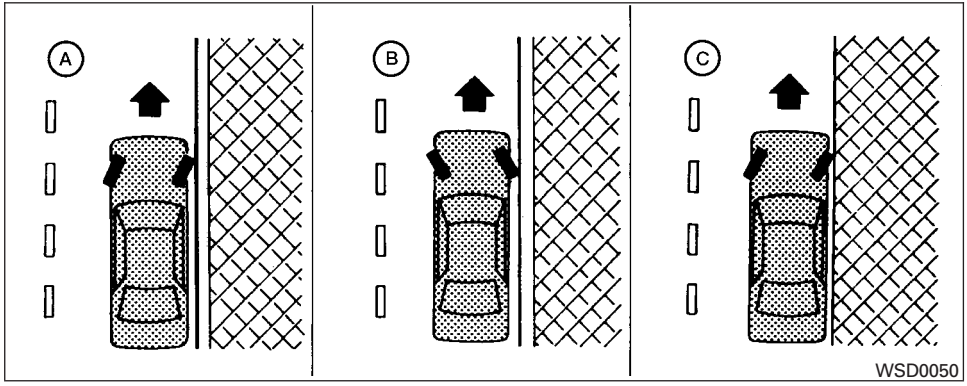

⚠WARNING

- **Do not stop or park the vehicle over flammable materials such as dry grass, waste paper or rags. They may ignite and cause a fire.**
- **Safe parking procedures require that both the parking brake be set and the transmission placed into P (Park). Failure to do so could cause the vehicle to move unexpectedly or roll away and result in an accident. Make sure the shift lever has been pushed as far forward as it can go and cannot be moved without depressing the foot brake pedal.**
- **Never leave the engine running while the vehicle is unattended.**
- **To help avoid risk of injury or death through unintended operation of the vehicle and/or its systems, do not leave children, people who require the assistance of others or pets unattended in your vehicle. Additionally, the temperature inside a closed vehicle on a warm day can quickly become high enough to cause a significant risk of injury or death to people and pets.**

1. Firmly apply the parking brake.
2. Move the shift lever to the P (Park) position.
3. To help prevent the vehicle from rolling into traffic when parked on an incline, it is a good practice to turn the wheels as illustrated.

- HEADED DOWNHILL WITH CURB: Ⓐ

  Turn the wheels into the curb and move the vehicle forward until the curb side wheel gently touches the curb.

- HEADED UPHILL WITH CURB: Ⓑ

  Turn the wheels away from the curb and move the vehicle back until the curb side wheel gently touches the curb.

- HEADED UPHILL OR DOWNHILL, NO CURB: Ⓒ

  Turn the wheels toward the side of the road so the vehicle will move away from the center of the road if it moves.

4. Place the ignition switch in the LOCK position.

⚠ WARNING

- **If the engine is not running or is turned off while driving, the power assist for the steering will not work. Steering will be harder to operate.**
- **When the power steering warning light illuminates with the engine running, there will be no power assist for the steering. You will still have control of the vehicle, but the steering will be harder to operate. Have the power steering system checked. It is recommended that you visit an INFINITI retailer for this service.**

The power steering system is designed to provide power assist while driving to operate the steering wheel with light force.

When the steering wheel is operated repeatedly or continuously while parking or driving at a very low speed, the power assist for the steering wheel will be reduced. This is to prevent overheating of the power steering system and protect it from getting damaged. While the power assist is reduced, steering wheel operation will become heavy. When the temperature of the power steering system goes down, the power assist level will return to normal. Avoid repeating such steering wheel operations that could cause the power steering system to overheat.

You may hear a sound when the steering wheel is operated quickly. However, this is not a malfunction.

If the electric power steering warning light illuminates while the engine is running, it may indicate the power steering system is not functioning properly and may need servicing. Have the power steering system checked. It is recommended that you visit an INFINITI retailer for this service.

When the electric power steering warning light illuminates with the engine running, there will be no power assist for the steering, but you will still have control of the vehicle. At this time, greater steering effort is required to operate the steering wheel, especially in sharp turns and at low speeds.

For additional information, refer to “Power steering warning light” in the “Instruments and controls” section of this manual.

The brake system has two separate hydraulic circuits. If one circuit malfunctions, you will still have braking at two wheels.

BRAKE PRECAUTIONS

Vacuum assisted brakes

The brake booster aids braking by using engine vacuum. If the engine stops, you can stop the vehicle by depressing the brake pedal. However, greater foot pressure on the brake pedal will be required to stop the vehicle and stopping distance will be longer.

Using the brakes

Avoid resting your foot on the brake pedal while driving. This will overheat the brakes, wear out the brake pads faster, and reduce gas mileage.

To help reduce brake wear and to prevent the brakes from overheating, reduce speed and downshift to a lower gear before going down a slope or long grade. Overheated brakes may reduce braking performance and could result in loss of vehicle control.

⚠ WARNING

- **While driving on a slippery surface, be careful when braking, accelerating or downshifting. Abrupt braking or accelerating could cause the wheels to skid and result in an accident.**
- **If the engine is not running or is turned off while driving, the power assist for the brakes will not work. Braking will be harder.**

Wet brakes

When the vehicle is washed or driven through water, the brakes may get wet. As a result, your braking distance will be longer and the vehicle may pull to one side during braking.

To dry the brakes, drive the vehicle at a safe speed while lightly pressing the brake pedal to heat up the brakes. Do this until the brakes return to normal. Avoid driving the vehicle at high speeds until the brakes function correctly.

Parking brake break-in

Break-in the parking brake shoes whenever the effect of the parking brake is weakened or whenever the parking brake shoes and/or rotors are replaced, in order to assure the best brake performance.

This procedure is described in the INFINITI Service Manual. It is recommended that you visit an INFINITI retailer for this service.

ANTI-LOCK BRAKING SYSTEM (ABS)

⚠ WARNING

- **The ABS is a sophisticated device, but it cannot prevent accidents resulting from careless or dangerous driving techniques. It can help maintain vehicle control during braking on slippery surfaces. Remember that stopping distances on slippery surfaces will be longer than on normal surfaces even with ABS. Stopping distances may also be longer on rough, gravel or snow covered roads, or if you are using tire chains. Always maintain a safe distance from the vehicle in front of you. Ultimately, the driver is responsible for safety.**
- **Tire type and condition may also affect braking effectiveness.**
  - **When replacing tires, install the specified size of tires on all four wheels.**
  - **When installing a spare tire, make sure that it is the proper size and type as specified on the Tire and Loading Information label. For additional information, refer to “Tire and loading information label” in the “Technical and consumer information” section of this manual.**
  - **For additional information, refer to “Wheels and tires” in the “Maintenance and do-it-yourself” section of this manual.**

The ABS controls the brakes so the wheels do not lock during hard braking or when braking on slippery surfaces. The system detects the rotation speed at each wheel and varies the brake fluid pressure to prevent each wheel from locking and sliding. By preventing each wheel from locking, the system helps the driver maintain steering control and helps to minimize swerving and spinning on slippery surfaces.

Using the system

Depress the brake pedal and hold it down. Depress the brake pedal with firm steady pressure, but do not pump the brakes. The ABS will operate to prevent the wheels from locking up. Steer the vehicle to avoid obstacles.

⚠ WARNING

Do not pump the brake pedal. Doing so may result in increased stopping distances.

Self-test feature

The ABS includes electronic sensors, electric pumps, hydraulic solenoids and a computer. The computer has a built-in diagnostic feature that tests the system each time you start the engine and move the vehicle at a low speed in forward or reverse. When the self-test occurs, you may hear a “clunk” noise and/or feel a pulsation in the brake pedal. This is normal and does not indicate a malfunction. If the computer senses a malfunction, it switches the ABS off and illuminates the ABS warning light on the instrument panel. The brake system then operates normally but without anti-lock assistance.

If the ABS warning light illuminates during the self-test or while driving, have the vehicle checked. It is recommended that you visit an INFINITI retailer for this service.

Normal operation

The ABS operates at speeds above 3 - 6 mph (5 - 10 km/h). The speed varies according to road conditions.

When the ABS senses that one or more wheels are close to locking up, the actuator rapidly applies and releases hydraulic pressure. This action is similar to pumping the brakes very quickly. You may feel a pulsation in the brake pedal and hear a noise from under the hood or feel a vibration from the actuator when it is operating. This is normal and indicates that the ABS is operating properly. However, the pulsation may indicate that road conditions are hazardous and extra care is required while driving.

BRAKE ASSIST

When the force applied to the brake pedal exceeds a certain level, the brake assist is activated generating greater braking force than a conventional brake booster even with light pedal force.

⚠ WARNING

The brake assist is only an aid to assist braking operation and is not a collision warning or avoidance device. it is the drivers responsibility to stay alert, drive safely and be in control of the vehicle at all times.

VEHICLE DYNAMIC CONTROL (VDC) SYSTEM

The VDC system uses various sensors to monitor driver inputs and vehicle motion. Under certain driving conditions, the VDC system helps to perform the following functions:

- Controls brake pressure to reduce wheel slip on one slipping drive wheel so power is transferred to a non slipping drive wheel on the same axle.
- Controls brake pressure and engine output to reduce drive wheel slip based on vehicle speed (traction control function).
- Controls brake pressure at individual wheels and engine output to help the driver maintain control of the vehicle in the following conditions:
  - understeer (vehicle tends to not follow the steered path despite increased steering input)
  - oversteer (vehicle tends to spin due to certain road or driving conditions)

The VDC system can help the driver to maintain control of the vehicle, but it cannot prevent loss of vehicle control in all driving situations.

When the VDC system operates, the indicator in the instrument panel flashes to note the following:

- The road may be slippery or the system may determine some action is required to help keep the vehicle on the steered path.
- You may feel a pulsation in the brake pedal and hear a noise or vibration from under the hood. This is normal and indicates that the VDC system is working properly.
- Adjust your speed and driving to the road conditions.

For additional information, refer to “Slip indicator light” and ”Vehicle Dynamic Control (VDC) OFF indicator light” in the ”Instruments and controls” section of this manual.

If a malfunction occurs in the system, the and indicator lights come on in the instrument panel. The VDC system automatically turns off when these indicator lights are on.

The VDC OFF switch is used to turn off the VDC system. The indicator illuminates to indicate the VDC system is off.

When the VDC switch is used to turn off the system, the VDC system still operates to prevent one drive wheel from slipping by transferring power to a non slipping drive wheel. The indicator flashes if this occurs. All other VDC functions are off and the indicator will not flash.

The VDC system is automatically reset to on when the ignition switch is placed in the OFF position then back to the ON position.

The computer has a built in diagnostic feature that tests the system each time you start the engine and move the vehicle forward or in reverse at a slow speed. When the self-test occurs, you may hear a clunk noise and/or feel a pulsation in the brake pedal. This is normal and is not an indication of a malfunction.

WARNING

- **The VDC system is designed to help the driver maintain controllability but does not prevent accidents due to abrupt steering operation at high speeds or by careless or dangerous driving techniques. Reduce vehicle speed and be especially careful when driving and cornering on slippery surfaces and always drive carefully.**
- **Do not modify the vehicle’s suspension. If suspension parts such as shock absorbers, struts, springs, stabilizer bars, bushings and wheels are not INFINITI recommended for your vehicle or are extremely deteriorated, the VDC system may not operate properly. This could adversely affect vehicle handling performance, and the indicator may flash or both the and indicator lights may illuminate.**
- **If brake related parts such as brake pads, rotors and calipers are not INFINITI recommended or are extremely deteriorated, the VDC system may not operate properly and both the and the indicator lights may illuminate.**
- **If engine control related parts are not INFINITI recommended or are extremely deteriorated, both the and indicator lights may illuminate.**

- **When driving on extremely inclined surfaces such as higher banked corners, the VDC system may not operate properly and the indicator may flash or both the and indicator lights may illuminate. Do not drive on these types of roads.**
- **When driving on an unstable surface such as a turntable, ferry, elevator or ramp, the indicator may flash or both the and indicator lights may illuminate. This is not a malfunction. Restart the engine after driving onto a stable surface.**
- **If wheels or tires other than the INFINITI recommended ones are used, the VDC system may not operate properly and the indicator may flash or both the and indicator lights may illuminate.**
- **The VDC system is not a substitute for winter tires or tire chains on a snow covered road.**

ACTIVE TRACE CONTROL (if so equipped)

This system senses driving based on the driver's steering and acceleration/braking patterns, and controls brake pressure at individual wheels to help smooth vehicle response.

When the VDC OFF switch is used to turn off the VDC system, the active trace control system is also turned off.

If the active trace control is not functioning properly, the FEB OFF indicator light illuminates in the instrument panel.

BRAKE FORCE DISTRIBUTION

During braking while driving through turns, the system optimizes the distribution of force to each of the four wheels depending on the radius of the turn.

WARNING

- **The VDC system is designed to help the driver maintain controllability but does not prevent accidents due to abrupt steering operation at high speeds or by careless or dangerous driving techniques. Reduce vehicle speed and be especially careful when driving and cornering on slippery surfaces and always drive carefully.**
- **Do not modify the vehicle's suspension. If suspension parts such as shock absorbers, struts, springs, stabilizer bars, bushings and wheels are not INFINITI recommended for your vehicle or are extremely deteriorated, the VDC system may not operate properly. This could adversely affect vehicle handling performance, and the indicator may flash or both the and indicator lights may illuminate.**
- **If brake related parts such as brake pads, rotors and calipers are not INFINITI recommended or are extremely deteriorated, the VDC system may not operate properly and both the and the indicator lights may illuminate.**

- **If engine control related parts are not INFINITI recommended or are extremely deteriorated, both the and indicator lights may illuminate.**
- **When driving on extremely inclined surfaces such as higher banked corners, the VDC system may not operate properly and the indicator may flash or both the and indicator lights may illuminate. Do not drive on these types of roads.**
- **When driving on an unstable surface such as a turntable, ferry, elevator or ramp, the indicator may flash or both the and indicator lights may illuminate. This is not a malfunction. Restart the engine after driving onto a stable surface.**
- **If wheels or tires other than the INFINITI recommended ones are used, the VDC system may not operate properly and the indicator may flash or both the and indicator lights may illuminate.**
- **The VDC system is not a substitute for winter tires or tire chains on a snow covered road.**

WARNING

- **Never rely solely on the hill start assist system to prevent the vehicle from moving backward on a hill. Always drive carefully and attentively. Depress the brake pedal when the vehicle is stopped on a steep hill. Be especially careful when stopped on a hill on frozen or muddy roads. Failure to prevent the vehicle from rolling backwards may result in a loss of control of the vehicle and possible serious injury or death.**
- **The hill start assist system is not designed to hold the vehicle at a standstill on a hill. Depress the brake pedal when the vehicle is stopped on a steep hill. Failure to do so may cause the vehicle to roll backwards and may result in a collision or serious personal injury.**
- **The hill start assist system may not prevent the vehicle from rolling backwards on a hill under all load or road conditions. Always be prepared to depress the brake pedal to prevent the vehicle from rolling backwards. Failure to do so may result in a collision or serious personal injury.**

When the vehicle is stopped on a hill, the hill start assist system automatically keeps the brakes applied to help prevent the vehicle from rolling backward in the time it takes the driver to release the brake pedal and apply the accelerator.

The hill start assist system will operate automatically under the following conditions:

- The transmission is shifted to a forward or reverse gear.
- The vehicle is stopped completely on a hill by applying the brake. The maximum holding time is 2 seconds. After 2 seconds the vehicle will begin to roll back and the hill start assist system will stop operating completely.

The hill start assist system will not operate when the shift lever is placed in the N (Neutral) or P (Park) position or on a flat and level road.

FRONT AND REAR SONAR SYSTEM (if so equipped)

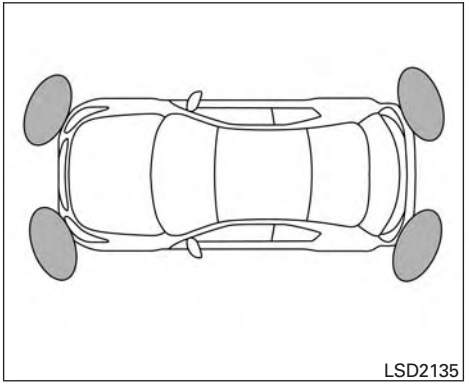

The sonar (parking sensor) system sounds a tone to inform the driver of obstacles near the bumper.

When the “DISPLAY” key is ON, the sonar view will automatically appear in the meter.

⚠WARNING

Failure to follow the warnings and instructions for proper use of the sonar system could result in serious injury or death.

- **The sonar system is not a replacement for proper driving procedures and is not designed to prevent contact with vehicles or objects.**
- **The driver is always responsible for safety during parking and other maneuvers. Always look around and check that it is safe to do so before parking.**
- **This function is designed as an aid to the driver in detecting large stationary objects to help avoid damaging the vehicle.**

If your vehicle sustains damage to the bumper fascia, leaving it misaligned or bent, the sensing zone may be altered causing inaccurate measurement of obstacles or false alarm.

⚠CAUTION

- **Excessive noise (such as audio system volume or an open vehicle window) will interfere with the tone and it may not be heard**
- **Keep the sonar sensors (located on the bumper fascias) free from snow, ice and large accumulations of dirt. Do not clean the sensors with sharp objects. If the sensors are covered, the accuracy of the sonar function will be diminished.**

SYSTEM OPERATION

The system informs with a visual and audible signal of front obstacles when the shift lever is in the D (Drive) position and both front and rear obstacles when the shift lever is in the R (Reverse) position.

Sonar Operation Table

	FR Sensor		RR Sensor	
Range	Sound	Display	Sound	Display
P	x	†	x	†
R	o	o	o	o
N	x	†	x	†
D	o	o	x	†
o – Display/Beep when detect				
† – Display on camera view				
x – No Display and Beep				

The system is deactivated at speeds above 6 mph (10 km/h). It is reactivated at lower speeds.

The intermittent tone will stop after 3 seconds when an obstacle is detected by only the corner sensor and the distance does not change. The tone will stop when the obstacle get away from the vehicle.

When the object is detected, the indicator (green) appears and blinks and the tone sounds intermittently. When the vehicle moves closer to the object, the color of the indicator turns yellow and the rate of the blinking increase. When the vehicle is very close to the object, the indicator stops blinking and turns red, and the tone sounds continuously.

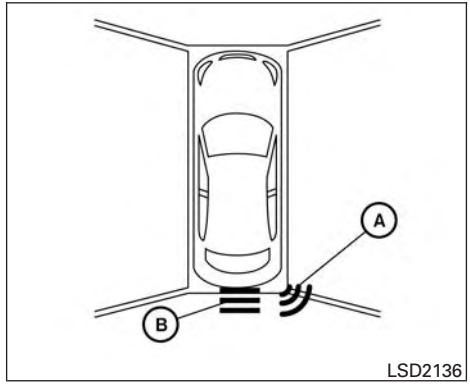

When the corner of the vehicle moves closer to an object, the corner sonar indicators Ⓐ appears. When the center of the vehicle moves close to an object, the center sonar (if so equipped) indicator Ⓑ appears.

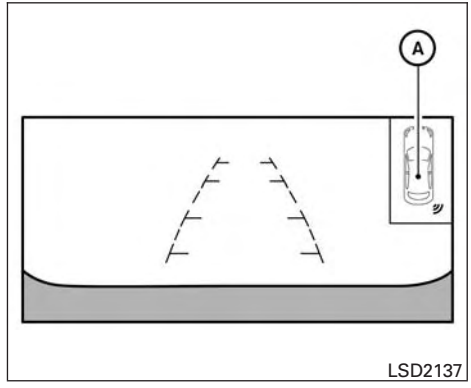

The system indicators Ⓐ will appear when the vehicle moves closer to an object.

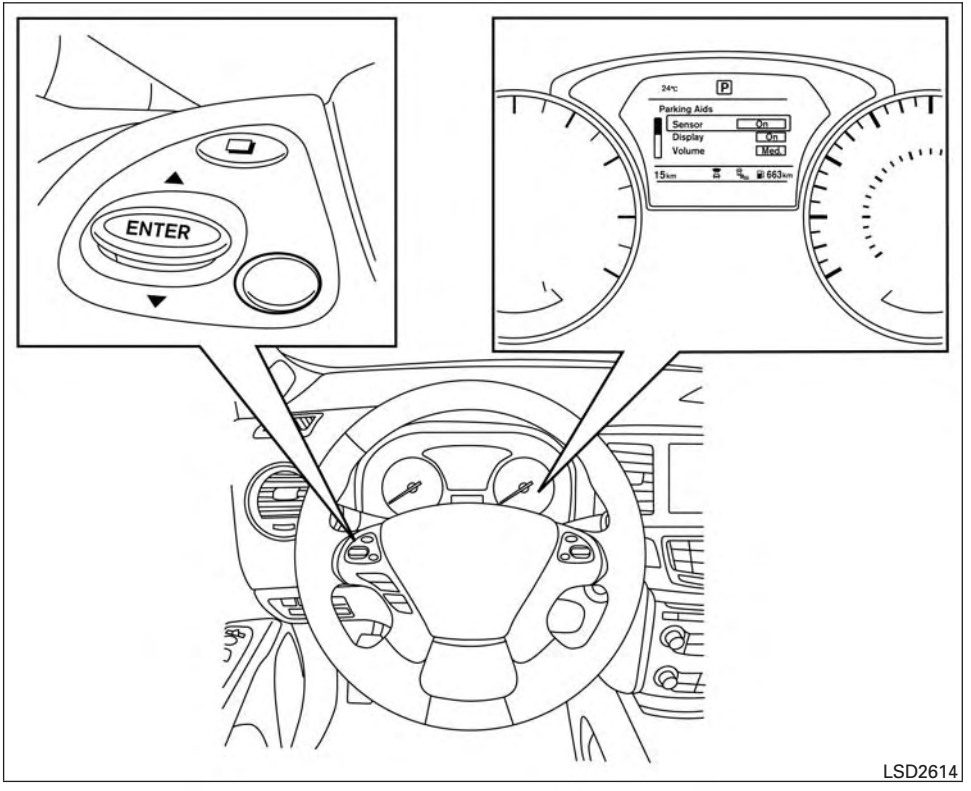

HOW TO ENABLE/DISABLE THE SONAR SYSTEM

The system is automatically activated when the ignition is in the ON position and the shift lever is in the R (Reverse) position.

Perform the following steps to enable or disable the sonar system:

1. Press the button until “Driving Assistance” displays in the vehicle information display and then press ENTER. Use the button to select “Parking Aids”. Then press the ENTER button.
2. Select “Sensor” and press the ENTER button.

NOTE:

- The system will automatically be turned on when the engine is restarted.

SONAR LIMITATIONS

⚠ WARNING

Listed below are the system limitations for the sonar system. Failure to operate the vehicle in accordance with these system limitations could result in serious injury or death.

- **Read and understand the limitations of the sonar system as contained in this section. Inclement weather may affect the function of the sonar system; this may include reduced performance or a false activation.**
- **The system is deactivated at speeds above 6 mph (10 km/h). It is reactivated at lower speeds.**
- **Inclement weather or ultrasonic sources such as an automatic car wash, a truck's compressed-air brakes or a pneumatic drill may affect the function of the system; this may include reduced performance or a false activation.**
- **The system is not designed to prevent contact with small or moving objects. Always move slowly. The system will not detect small objects below the bumper or on the ground.**
- **The system may not detect the following objects: Fluffy objects such as snow, cloth, cotton, glass-wool, etc. Thin objects such as rope, wire and chain, etc, or wedge-shaped objects.**
- **The system may not detect objects at speeds above 3 mph (5 km/h) and may not detect certain angular or moving objects.**

SYSTEM TEMPORARILY UNAVAILABLE

When sonar blockage is detected, the system will be deactivated automatically.

The system is not available until the conditions no longer exist.

The sonar sensors may be blocked by temporary ambient conditions such as splashing water, mist or fog. The blocked condition may also be caused by objects such as ice, frost or dirt obstructing the sonar sensors.

Action to take:

When the above conditions no longer exist, the system will resume automatically.

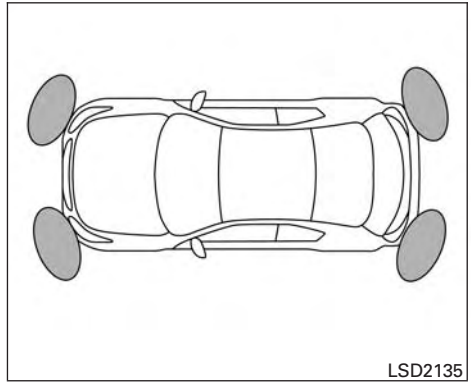

SYSTEM MAINTENANCE

The sonar sensors are located on the front and rear bumpers. Always keep the area near the sonar sensors clean.

The sonar sensors may be blocked by temporary ambient conditions such as splashing water, mist or fog.

The blocked condition may also be caused by objects such as ice, frost or dirt obstructing the sonar sensors.

Check for and remove objects obstructing the area around the sonar sensors.

Do not attach stickers (including transparent material), install accessories or apply additional paint near the sonar sensors.

Do not strike or damage the area around the sonar sensors. It is recommended that you visit an INFINITI retailer if the area around the sonar sensors is damaged due to a collision.

FREEING A FROZEN DOOR LOCK

To prevent a door lock from freezing, apply deicer through the key hole. If the lock becomes frozen, heat the key before inserting it into the key hole, or use the INFINITI Intelligent Key.

ANTIFREEZE

In the winter when it is anticipated that the temperature will drop below 32°F (0°C), check the antifreeze to assure proper winter protection. For additional information, refer to "Checking engine coolant level" in the "Maintenance and do-it-yourself" section of this manual.

BATTERY

If the battery is not fully charged during extremely cold weather conditions, the battery fluid may freeze and damage the battery. To maintain maximum efficiency, the battery should be checked regularly. For additional information, refer to "Battery" in the "Maintenance and do-it-yourself" section of this manual.

DRAINING OF COOLANT WATER

If the vehicle is to be left outside without antifreeze, drain the cooling system, including the engine block. Refill before operating the vehicle. For additional information, refer to "Changing engine coolant" in the "Maintenance and do-it-yourself" section of this manual.

TIRE EQUIPMENT

1. SUMMER tires have a tread designed to provide superior performance on dry pavement. However, the performance of these tires will be substantially reduced in snowy and icy conditions. If you operate your vehicle on snowy or icy roads, INFINITI recommends the use of MUD & SNOW or ALL SEASON TIRES on all four wheels. It is recommended that you visit an INFINITI retailer for the tire type, size, speed rating and availability information.
2. For additional traction on icy roads, studded tires may be used. However, some U.S. states and Canadian provinces prohibit their use. Check local, state and provincial laws before installing studded tires.

Skid and traction capabilities of studded snow tires on wet or dry surfaces may be poorer than that of non-studded snow tires.

3. Tire chains may be used. For additional information, refer to "Tire chains" in the "Maintenance and do-it-yourself" section of this manual.

SPECIAL WINTER EQUIPMENT

It is recommended that the following items be carried in the vehicle during winter:

- A scraper and stiff-bristled brush to remove ice and snow from the windows and wiper blades.
- A sturdy, flat board to be placed under the jack to give it firm support.
- A shovel to dig the vehicle out of snowdrifts.
- Extra washer fluid to refill the windshield-washer fluid reservoir.

DRIVING ON SNOW OR ICE

⚠ WARNING

- **Wet ice (32°F, 0°C and freezing rain), very cold snow or ice can be slick and very hard to drive on. The vehicle will have much less traction or "grip" under these conditions. Try to avoid driving on wet ice until the road is salted or sanded.**
- **Whatever the condition, drive with caution. Accelerate and slow down with care. If accelerating or downshifting too fast, the drive wheels will lose even more traction.**
- **Allow more stopping distance under these conditions. Braking should be started sooner than on dry pavement.**
- **Allow greater following distances on slippery roads.**
- **Watch for slippery spots (glare ice). These may appear on an otherwise clear road in shaded areas. If a patch of ice is seen ahead, brake before reaching it. Try not to brake while on the ice, and avoid any sudden steering maneuvers.**
- **Do not use the cruise control on slippery roads.**
- **Snow can trap dangerous exhaust gases under your vehicle. Keep snow clear of the exhaust pipe and from around your vehicle.**

ENGINE BLOCK HEATER (if so equipped)

Engine block heaters are used to assist with cold temperature starting.

The engine block heater should be used when the outside temperature is 20°F (-7°C) or lower.

⚠ WARNING

- **Do not use your engine block heater with an ungrounded electrical system or a 2-pronged adapter. You can be seriously injured by an electrical shock if you use an ungrounded connection.**
- **Disconnect and properly store the engine block heater cord before starting the engine. Damage to the cord could result in an electrical shock and can cause serious injury.**
- **Use a heavy-duty 3-wire, 3-pronged extension cord rated for at least 10 A. Plug the extension cord into a Ground Fault Interrupt (GFI) protected, grounded 110-VAC outlet. Failure to use the proper extension cord or a grounded outlet can result in a fire or electrical shock and cause serious personal injury.**

To use the engine block heater:

1. Turn the engine off.
2. Open the hood and unwrap the engine block heater cord.
3. Plug the engine block heater cord into a grounded 3-wire, 3-pronged extension cord.

4. Plug the extension cord into a Ground Fault Interrupt (GFI) protected, grounded 110-volt AC (VAC) outlet.
5. The engine block heater must be plugged in for at least 2 - 4 hours, depending on outside temperatures, to properly warm the engine coolant. Use an appropriate timer to turn the engine block heater on.
6. Before starting the engine, unplug and properly store the cord to keep it away from moving parts.

6 In case of emergency

Hazard warning flasher switch 6-2
Roadside assistance program. 6-2
Emergency engine shut off 6-3
Flat tire 6-3
Tire Pressure Monitoring System (TPMS). 6-3
Changing a flat tire 6-4
Jump starting 6-10
Push starting. 6-12
If your vehicle overheats 6-12
Towing your vehicle 6-13
Towing recommended by INFINITI 6-13
Vehicle recovery (freeing a stuck vehicle) 6-15

HAZARD WARNING FLASHER SWITCH

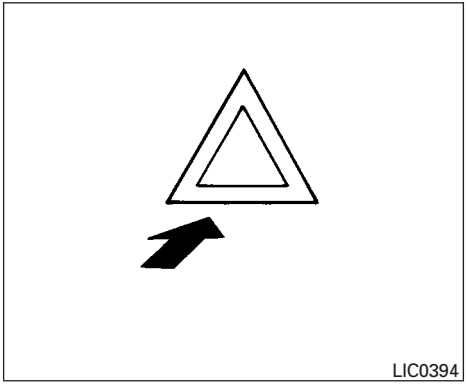

Push the switch on to warn other drivers when you must stop or park under emergency conditions. All turn signal lights flash.

⚠ WARNING

- **If stopping for an emergency, be sure to move the vehicle well off the road.**
- **Do not use the hazard warning flashers while moving on the highway unless unusual circumstances force you to drive so slowly that your vehicle might become a hazard to other traffic.**
- **Turn signals do not work when the hazard warning flasher lights are on.**

The flashers will operate with the ignition switch placed in any position.

Some jurisdictions may prohibit the use of the hazard warning flasher switch while driving.

ROADSIDE ASSISTANCE PROGRAM

In the event of a roadside emergency, roadside assistance service is available to you. Please refer to your Warranty Information Booklet (U.S.) or the Warranty & Roadside Assistance Information Booklet (Canada) for details.

EMERGENCY ENGINE SHUT OFF

To shut off the engine in an emergency situation while driving, perform the following procedure:

– Rapidly push the push-button ignition switch three consecutive times in less than 1.5 seconds, or

– Push and hold the push-button ignition switch for more than 2 seconds.

FLAT TIRE

TIRE PRESSURE MONITORING SYSTEM (TPMS)

This vehicle is equipped with TPMS. It monitors tire pressure of all tires except the spare. When the low tire pressure warning light is lit, and the "Tire Pressure Low - Add Air" warning appears in the vehicle information display, one or more of your tires is significantly under-inflated. If equipped, the system also displays pressure of all tires (except the spare tire) on the display screen by sending a signal from a sensor that is installed in each wheel. If the vehicle is being driven with low tire pressure, the TPMS will activate and warn you of it by the low tire pressure warning light. This system will activate only when the vehicle is driven at speeds above 16 mph (25 km/h). For additional information, refer to "Warning lights, indicator lights and audible reminders" in the "Instruments and controls" section and the "Tire Pressure Monitoring System (TPMS)" in the "Starting and driving" sections of this manual.

⚠ WARNING

- **Radio waves could adversely affect electric medical equipment. Those who use a pacemaker should contact the electric medical equipment manufacturer for the possible influences before use.**
- **If the low tire pressure warning light illuminates while driving, avoid sudden steering maneuvers or abrupt braking, reduce vehicle speed, pull off the road to a safe location and stop the vehicle as soon as possible. Driving with under-inflated tires may permanently damage the tires and increase the likelihood of tire failure. Serious vehicle damage could occur and may lead to an accident and could result in serious personal injury. Check the tire pressure for all four tires. Adjust the tire pressure to the recommended COLD tire pressure shown on the Tire and Loading Information label to turn the low tire pressure warning light OFF. If you have a flat tire, replace it with a spare tire as soon as possible.**

- **Since the spare tire is not equipped with the TPMS, when a spare tire is mounted or a wheel is replaced, tire pressure will not be indicated, the TPMS will not function and the low tire pressure warning light will flash for approximately 1 minute. The light will remain on after 1 minute. Have your tires replaced and/or TPMS system reset as soon as possible. It is recommended you visit an INFINITI retailer for these services.**
- **Replacing tires with those not originally specified by INFINITI could affect the proper operation of the TPMS.**
- **Do not inject any tire liquid or aerosol tire sealant into the tires, as this may cause a malfunction of the tire pressure sensors.**

CHANGING A FLAT TIRE

If you have a flat tire, follow the instructions below:

Stopping the vehicle

1. Safely move the vehicle off the road and away from traffic.
2. Turn on the hazard warning flashers.
3. Park on a level surface and apply the parking brake. Move the shift lever to P (Park).
4. Turn off the engine.
5. Raise the hood to warn other traffic and to signal professional road assistance personnel that you need assistance.
6. Have all passengers get out of the vehicle and stand in a safe place, away from traffic and clear of the vehicle.

⚠ WARNING

- **Make sure the parking brake is securely applied and the CVT is shifted into P (Park).**
- **Never change tires when the vehicle is on a slope, ice or slippery areas. This is hazardous.**
- **Never change tires if oncoming traffic is close to your vehicle. Wait for professional road assistance.**

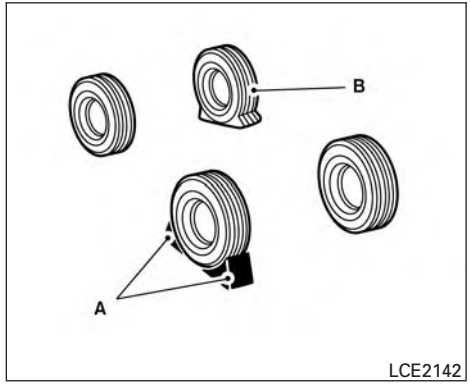

A. Blocks

B. Flat tire

Blocking wheels

Place suitable blocks at both the front and back of the wheel diagonally opposite the flat tire to prevent the vehicle from moving when it is jacked up.

⚠ WARNING

Be sure to block the wheel as the vehicle may move and result in personal injury.

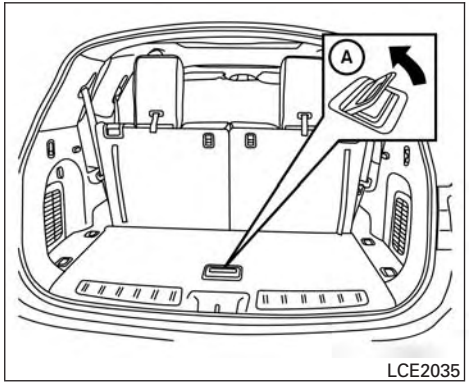

LCE2035

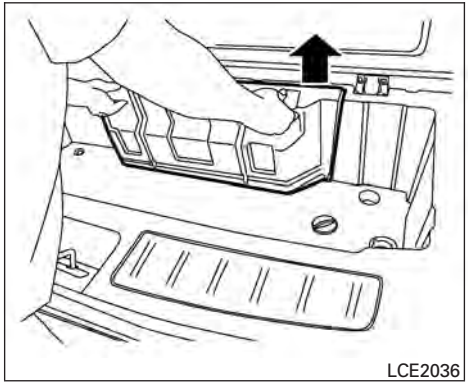
LCE2036

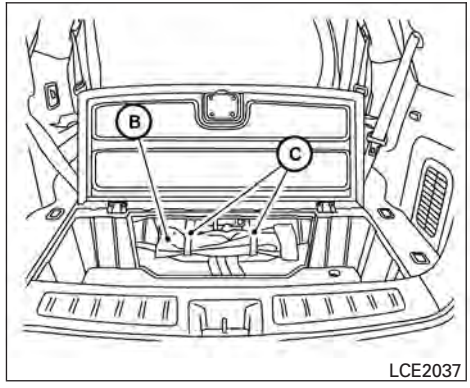

LCE2037

Getting the spare tire and tools

1. Open the liftgate and lift the luggage board in the cargo area using the handle Ⓐ.
2. Remove the jack and tool kit cover by lifting up using the handles.
3. Remove the tool kit Ⓑ.
   - To release the tool kit, release the hook and eye straps Ⓒ.

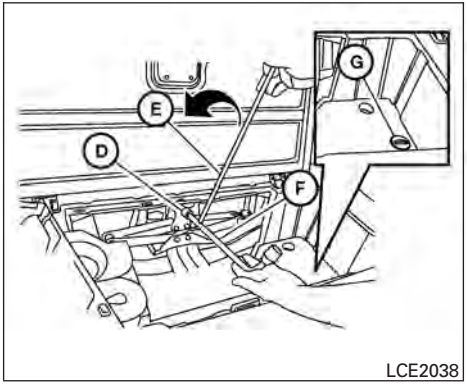

LCE2038

4. Remove the jack.
   - The jack is secured by a fastener Ⓓ. To release the fastener, assemble the extension Ⓔ into the wheel nut wrench Ⓕ as illustrated and rotate counterclockwise to release.
   - Insert the flat end of the wheel nut wrench Ⓕ into the slot of the fastener Ⓓ, and rotate counterclockwise to release the jack.
5. The lowering mechanism for the spare tire is located on the passenger side of the cargo area. Remove the cover Ⓖ to access the spare tire winch.

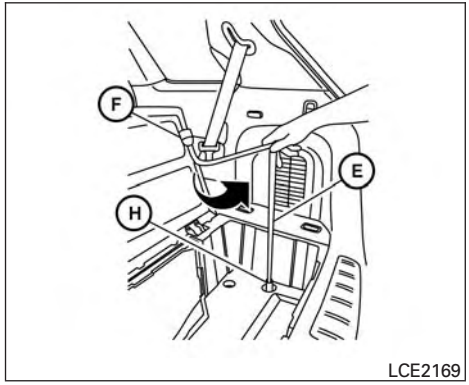

LCE2169

6. Insert the spare tire winch socket Ⓗ to the lowering mechanism nut.
7. To lower the spare tire, insert the wheel nut wrench Ⓕ to the extension Ⓔ and insert the T-shaped end to the winch socket Ⓗ and rotate counterclockwise.
8. After removing the spare tire from under the vehicle, be sure to crank the cable up to stow it.

NOTE:

Fully lower the spare tire below the vehicle before attempting to remove the winch from the spare tire.

9. Securely store the flat tire, tools and jacking equipment in the vehicle.

⚠ CAUTION

- **Make sure safety cable is coiled above spare tire when reinstalling spare tire/wheel.**
- **When re-installing the spare tire under the vehicle after use, be sure to secure it with the tire stem facing down toward the ground. If the spare tire is improperly secured with the tire stem facing up towards the bottom of the vehicle, there is an increased risk of separating from the vehicle in the event of a crash which may pose a hazard in traffic or risk of injury to others.**

Jacking up vehicle and removing the damaged tire

⚠ WARNING

- **Never get under the vehicle while it is supported only by the jack. If it is necessary to work under the vehicle, support it with safety stands.**
- **Use only the jack provided with your vehicle to lift the vehicle. Do not use the jack provided with your vehicle on other vehicles. The jack is designed for lifting only your vehicle during a tire change.**
- **Use the correct jack-up points. Never use any other part of the vehicle for jack support.**
- **Never jack up the vehicle more than necessary.**
- **Never use blocks on or under the jack.**
- **Do not start or run the engine while vehicle is on the jack. It may cause the vehicle to move. This is especially true for vehicles with limited slip differentials.**
- **Do not allow passengers to stay in the vehicle while it is on the jack.**
- **Never run the engine with a wheel(s) off the ground. It may cause the vehicle to move.**

Always refer to the illustration for the correct placement and jack-up points for your specific vehicle model and jack type.

Carefully read the caution label attached to the jack body and the following instructions.

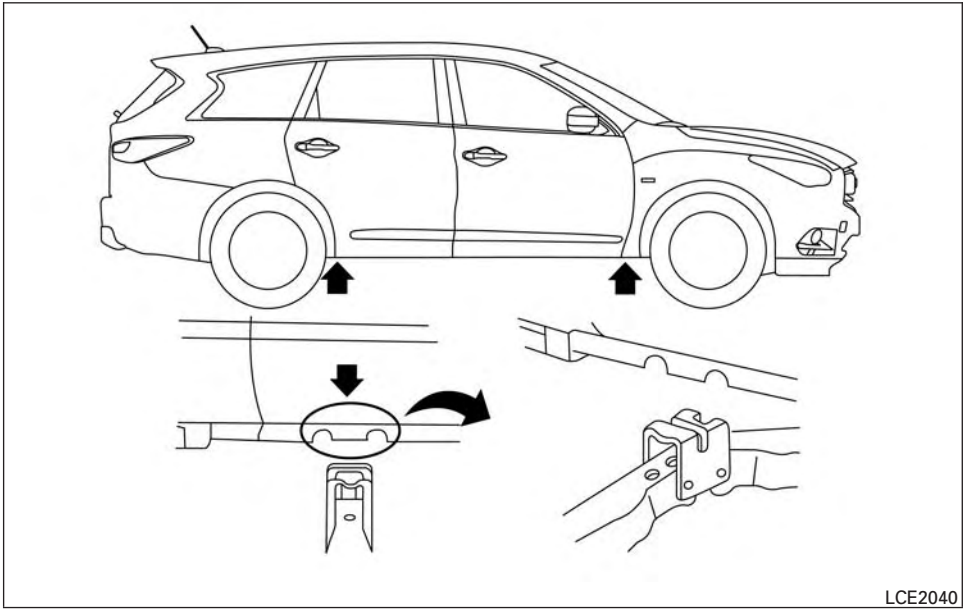

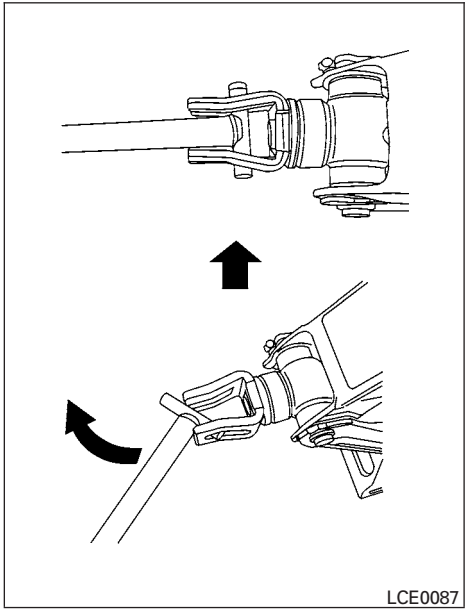

1. Loosen each wheel nut one or two turns by turning counterclockwise with the wheel nut wrench. **Do not remove the wheel nuts until the tire is off the ground.**
2. Place the jack directly under the jack-up point as illustrated so the top of the jack contacts the vehicle at the jack-up point. The jack-up points are indicated by stamped arrows on the side of the frame.

The jack should be used on firm and level ground.

3. Install the assembled jack rod into the jack as shown.
4. To lift the vehicle, securely hold the jack lever and rod. Carefully raise the vehicle until the tire clears the ground.

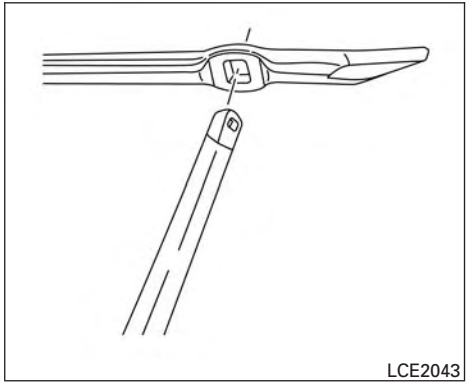

NOTE:

If the lug nut wrench/jack handle contacts the ground while raising the vehicle, disassemble the lug nut wrench from the jack extension rod, rotate it 90 degrees and reassemble.

5. Remove the wheel nuts and then remove the tire.

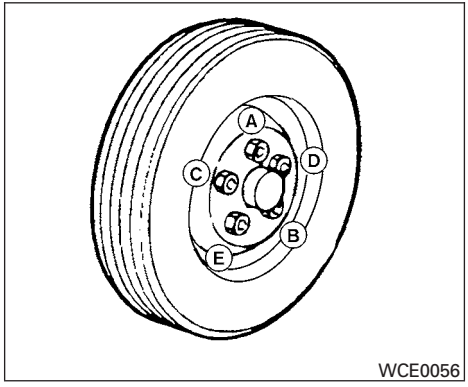

Installing the spare tire

The spare tire is designed for emergency use. For additional information, refer to "Wheels and tires" in the "Maintenance and do-it-yourself" section of this manual.

1. Clean any mud or dirt from the surface between the wheel and hub.
2. Carefully put the spare tire on and tighten the wheel nuts finger tight.
3. With the wheel nut wrench, tighten wheel nuts alternately and evenly in the sequence illustrated (Ⓐ, Ⓑ, Ⓒ, Ⓓ, Ⓔ) until they are tight.
4. Lower the vehicle slowly until the tire touches the ground. Then, with the wheel nut wrench, tighten the wheel nuts securely in the sequence illustrated (Ⓐ, Ⓑ, Ⓒ, Ⓓ, Ⓔ). Lower the vehicle completely.

⚠ WARNING

- **Incorrect wheel nuts or improperly tightened wheel nuts can cause the wheel to become loose or come off. This could cause an accident.**
- **Do not use oil or grease on the wheel studs or nuts. This could cause the nuts to become loose.**
- **Retighten the wheel nuts when the vehicle has been driven for 621 miles (1,000 km) (also in cases of a flat tire, etc.).**

As soon as possible, tighten the wheel nuts to the specified torque with a torque wrench.

Wheel nut tightening torque:

83 ft-lb (113 N·m)

The wheel nuts must be kept tightened to specification at all times. It is recommended that wheel nuts be tightened to specifications at each lubrication interval.

Adjust tire pressure to the COLD pressure.

COLD pressure: After vehicle has been parked for 3 hours or more or driven less than 1 mile (1.6 km).

COLD tire pressures are shown on the tire and loading information label affixed to the driver side center pillar.

5. Securely store the flat tire, tools and jacking equipment in the vehicle.
6. Close the liftgate.

⚠ WARNING

- **Always make sure that the spare tire and jacking equipment are properly secured after use. Such items can become dangerous projectiles in an accident or sudden stop.**
- **The spare tire is designed for emergency use. For additional information, refer to "Wheels and tires" in the "Maintenance and do-it-yourself" section of this manual.**

To start your engine with a booster battery, the instructions and precautions below must be followed.

⚠ WARNING

- **If done incorrectly, jump starting can lead to a battery explosion, resulting in severe injury or death. It could also damage your vehicle.**
- **Explosive hydrogen gas is always present in the vicinity of the battery. Keep all sparks and flames away from the battery.**
- **Do not allow battery fluid to come into contact with eyes, skin, clothing or painted surfaces. Battery fluid is a corrosive sulfuric acid solution which can cause severe burns. If the fluid should come into contact with anything, immediately flush the contacted area with water.**
- **Keep battery out of the reach of children.**
- **The booster battery must be rated at 12 volts. Use of an improperly rated battery can damage your vehicle.**
- **Whenever working on or near a battery, always wear suitable eye protectors (for example, goggles or industrial safety spectacles) and remove rings, metal bands, or any other jewelry. Do not lean over the battery when jump starting.**
- **Do not attempt to jump start a frozen battery. It could explode and cause serious injury.**
- **Your vehicle has an automatic engine cooling fan. It could come on at any time. Keep hands and other objects away from it.**

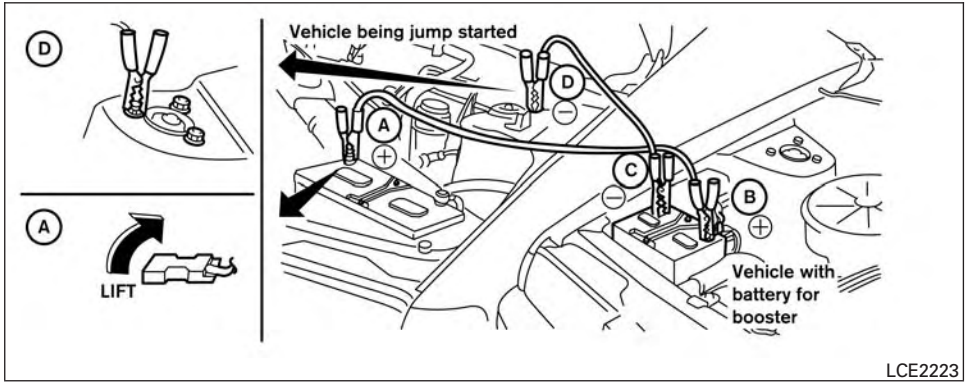

⚠ WARNING

Always follow the instructions below. Failure to do so could result in damage to the charging system and cause personal injury.

1. If the booster battery is in another vehicle, position the two vehicles to bring their batteries near each other.

   Do not allow the two vehicles to touch.

2. Apply the parking brake. Move the shift lever to P (Park). Switch off all unnecessary electrical systems (lights, heater, air conditioner, etc.).
3. Ensure the vent caps are level and tight.
4. Connect the jumper cables in the sequence illustrated (Ⓐ, Ⓑ, Ⓒ, Ⓓ).

⚠ CAUTION

- **Always connect positive (+) to positive (+) and negative (−) to body ground (for example, strut mounting bolt, engine lift bracket, etc.) — not to the battery.**
- **Make sure the jumper cables do not touch moving parts in the engine compartment and that the cable clamps do not contact any other metal.**

5. Start the engine of the booster vehicle and let it run for a few minutes.
6. Keep the engine speed of the booster vehicle at about 2,000 rpm and start the engine of the vehicle being jump started.

⚠ CAUTION

Do not keep the starter motor engaged for more than 10 seconds. If the engine does not start right away, place the ignition switch in the OFF position and wait 3 to 4 seconds before trying again.

7. After starting the engine, carefully disconnect the negative cable and then the positive cable.

PUSH STARTING

⚠ CAUTION

- **CVT models cannot be push-started or tow-started. Attempting to do so may cause transmission damage.**
- **Do not push start this vehicle. The 3-way catalyst may be damaged.**

IF YOUR VEHICLE OVERHEATS

⚠ WARNING

- **Do not continue to drive if your vehicle overheats. Doing so could cause engine damage or a vehicle fire.**
- **To avoid the danger of being scalded, never remove the radiator or coolant reservoir cap while the engine is still hot. When the radiator or coolant reservoir cap is removed, pressurized hot water will spurt out, possibly causing serious injury.**
- **Do not open the hood if steam is coming out.**

If your vehicle is overheating (indicated by an extremely high temperature gauge reading and the illumination of the engine oil pressure/engine coolant temperature high indicator light), or if you feel a lack of engine power, detect abnormal noise, etc. take the following steps.

1. Move the vehicle safely off the road, apply the parking brake and move the shift lever to P (Park).

   Do not stop the engine.

2. Turn off the air conditioner. Open all the windows, move the heater or air conditioner temperature control to maximum hot and fan control to high speed.
3. Get out of the vehicle. Look and listen for steam or coolant escaping from the radiator before opening the hood. (If steam or coolant is escaping, turn off the engine.) Do not open the hood further until no steam or coolant can be seen.
4. Open the engine hood.

⚠ WARNING

If steam or water is coming from the engine, stand clear to prevent getting burned.

5. Visually check drive belts for damage or looseness. Also check if the cooling fan is running. The radiator hoses and radiator should not leak water. If coolant is leaking, the water pump belt is missing or loose, or the cooling fan does not run, stop the engine.

⚠ WARNING

Be careful not to allow your hands, hair, jewelry or clothing to come into contact with, or get caught in, engine belts or the engine cooling fan. The engine cooling fan can start at any time.

6. After the engine cools down, check the coolant level in the engine coolant reservoir tank with the engine running. Add coolant to the engine coolant reservoir tank if necessary. Have your vehicle repaired. It is recommended that you visit an INFINITI retailer for this service.

When towing your vehicle, all jurisdictions and local regulations for towing must be followed. Incorrect towing equipment could damage your vehicle. Towing instructions are available from an INFINITI retailer. Local service operators are generally familiar with the applicable laws and procedures for towing. To assure proper towing and to prevent accidental damage to your vehicle, INFINITI recommends having a service operator tow your vehicle. It is advisable to have the service operator carefully read the following precautions:

⚠ WARNING

- **Never ride in a vehicle that is being towed.**
- **Never get under your vehicle after it has been lifted by a tow truck.**

⚠ CAUTION

- **When towing, make sure that the transmission, axles, steering system and powertrain are in working condition. If any of these conditions apply, dollies or a flatbed tow truck must be used.**
- **Always attach safety chains before towing.**

For additional information about towing your vehicle behind a Recreational Vehicle (RV), refer to “Flat towing” in the “Technical and consumer information” section of this manual.

TOWING RECOMMENDED BY INFINITI

INFINITI recommends towing your vehicle based upon the type of drivetrain. Please refer to the diagrams in this section to ensure that your vehicle is properly towed.

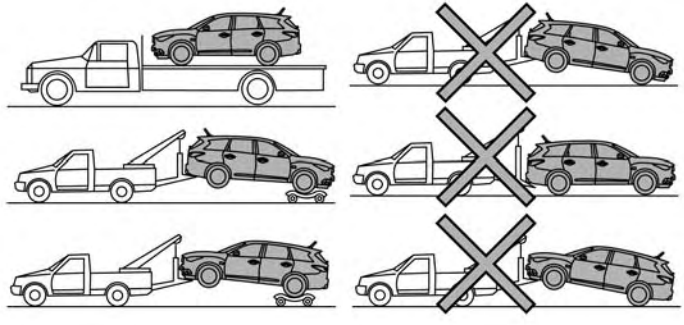

LCE2212

All-Wheel Drive (AWD) models

INFINITI recommends that towing dollies be used when towing your vehicle or the vehicle be placed on a flat bed truck as illustrated.

⚠ CAUTION

Never tow AWD models with any of the wheels on the ground as this may cause serious and expensive damage to the powertrain.

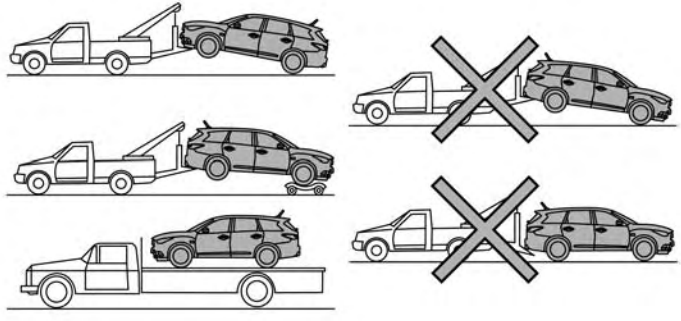

LCE2213

Front-Wheel Drive (FWD) models

INFINITI recommends that your vehicle be towed with the driving wheels (front) off the ground or place the vehicle on a flat bed truck as illustrated.

⚠ WARNING

- **Never tow your vehicle with the front wheels on the ground or four wheels on the ground (forward or backward), as this may cause serious and expensive damage to the transmission. If it is necessary to tow the vehicle with the rear wheels raised always use towing dollies under the front wheels.**
- **When towing with the rear wheels on the ground or on towing dollies, place the ignition switch in the ACC or ON position, and secure the steering wheel in the straight-ahead position with a rope or similar device.**

VEHICLE RECOVERY (freeing a stuck vehicle)

⚠ WARNING

To avoid vehicle damage, serious personal injury or death when recovering a stuck vehicle:

- **Contact a professional towing service to recover the vehicle if you have any questions regarding the recovery procedure.**
- **Tow chains or cables must be attached only to main structural members of the vehicle.**
- **Do not use the vehicle tie-downs to tow or free a stuck vehicle.**
- **Only use devices specifically designed for vehicle recovery and follow the manufacturer's instructions.**
- **Always pull the recovery device straight out from the front of the vehicle. Never pull at an angle.**
- **Route recovery devices so they do not touch any part of the vehicle except the attachment point.**

If your vehicle is stuck in sand, snow, mud, etc., use a tow strap or other device designed specifically for vehicle recovery. Always follow the manufacturer's instructions for the recovery device.

Rocking a stuck vehicle

⚠ WARNING

- **Stand clear of a stuck vehicle.**
- **Do not spin your tires at high speed. This could cause them to explode and result in serious injury. Parts of your vehicle could also overheat and be damaged.**

If your vehicle is stuck in sand, snow, mud, etc., use the following procedure:

1. Turn off the Vehicle Dynamic Control (VDC) system.
2. Make sure the area in front and behind the vehicle is clear of obstructions.
3. Turn the steering wheel right and left to clear an area around the front tires.
4. Slowly rock the vehicle forward and backward.
   - Shift back and forth between R (Reverse) and D (Drive).
   - Apply the accelerator as little as possible to maintain the rocking motion.
   - Release the accelerator pedal before shifting between R (Reverse) and D (Drive).
   - Do not spin the tires above 35 mph (55 km/h).
5. If the vehicle cannot be freed after a few tries, contact a professional towing service to remove the vehicle.

7 Appearance and care

Cleaning exterior 7-2
Washing 7-2
Waxing 7-2
Removing spots 7-3
Underbody 7-3
Glass 7-3
Aluminum alloy wheels 7-3
Chrome parts 7-3
Tire dressings 7-3
Cleaning interior 7-4
Air fresheners 7-4
Power moonroof 7-4
Floor mats (if so equipped) 7-5
Seat belts 7-6
Cleaning the seat tracks 7-6
Corrosion protection 7-6
Most common factors contributing to vehicle corrosion 7-6
Environmental factors influence the rate of corrosion 7-6
Protect your vehicle from corrosion 7-7

In order to maintain the appearance of your vehicle, it is important to take proper care of it.

To protect the paint surfaces, please wash your vehicle as soon as you can:

- after a rainfall to prevent possible damage from acid rain
- after driving on coastal roads
- when contaminants such as soot, bird droppings, tree sap, metal particles or bugs get on the paint surface
- when dust or mud builds up on the surface

Whenever possible, store or park your vehicle inside a garage or in a covered area.

When it is necessary to park outside, park in a shady area or protect the vehicle with a body cover.

Be careful not to scratch the paint surface when putting on or removing the body cover.

WASHING

Wash dirt off with a wet sponge and plenty of water. Clean the vehicle thoroughly using a mild soap, a special vehicle soap or general purpose dishwashing liquid mixed with clean, lukewarm (never hot) water.

⚠ CAUTION

- **Do not use car washes that use acid in the detergent. Some car washes, especially brushless ones, use some acid for cleaning. The acid may react with some plastic vehicle components, causing them to crack. This could affect their appearance, and also could cause them not to function properly. Always check with your car wash to confirm that acid is not used.**
- **Do not wash the vehicle with strong household soap, strong chemical detergents, gasoline or solvents.**
- **Do not wash the vehicle in direct sunlight or while the vehicle body is hot, as the surface may become water-spotted.**
- **Avoid using tight-napped or rough cloths, such as washing mitts. Care must be taken when removing caked-on dirt or other foreign substances so the paint surface is not scratched or damaged.**

Rinse the vehicle thoroughly with plenty of clean water.

Inside edges, seams and folds on the doors, hatches and hood are particularly vulnerable to the effects of road salt. Therefore, these areas must be cleaned regularly. Take care that the drain holes in the lower edge of the door are open. Spray water under the body and in the wheel wells to loosen the dirt and wash away road salt.

A damp chamois can be used to dry the vehicle to avoid water spots.

WAXING

Regular waxing protects the paint surface and helps retain new vehicle appearance. Polishing is recommended to remove built-up wax residue and to avoid a weathered appearance before re-applying wax.

An INFINITI retailer can assist you in choosing the proper product.

- Wax your vehicle only after a thorough washing. Follow the instructions supplied with the wax.
- Do not use a wax containing any abrasives, cutting compounds or cleaners that may damage the vehicle finish.

Machine compounding or aggressive polishing on a base coat/clear coat paint finish may dull the finish or leave swirl marks.

REMOVING SPOTS

Remove tar and oil spots, industrial dust, insects, and tree sap as quickly as possible from the surface of the paint to avoid lasting damage or staining. Special cleaning products are available at an INFINITI retailer or any automotive accessory store. It is recommended that you visit an INFINITI retailer for these products.

UNDERBODY

In areas where road salt is used in winter, it is necessary to clean the underbody regularly in order to prevent dirt and salt from building up and causing the acceleration of corrosion on the underbody and suspension. Before the winter period and again in the spring, the underseal must be checked and, if necessary, re-treated.

GLASS

Use glass cleaner to remove smoke and dust film from the glass surfaces. It is normal for glass to become coated with a film after the vehicle is parked in the hot sun. Glass cleaner and a soft cloth will easily remove this film.

⚠ CAUTION

When cleaning the inside of the windows, do not use sharp-edged tools, abrasive cleaners or chlorine-based disinfectant cleaners. They could damage the electrical conductors, radio antenna elements or rear window defroster elements.

ALUMINUM ALLOY WHEELS

Wash the wheels regularly with a sponge dampened in a mild soap solution, especially during winter months in areas where road salt is used. If not removed, road salt can discolor the wheels.

⚠ CAUTION

Follow the directions below to avoid staining or discoloring the wheels:

- **Do not use a cleaner that uses strong acid or alkali contents to clean the wheels.**
- **Do not apply wheel cleaners to the wheels when they are hot. The wheel temperature should be the same as ambient temperature.**
- **Rinse the wheel to completely remove the cleaner within 15 minutes after the cleaner is applied.**

CHROME PARTS

Clean all chrome parts regularly with a non-abrasive chrome polish to maintain the finish.

TIRE DRESSINGS

INFINITI does not recommend the use of tire dressings. Tire manufacturers apply a coating to the tires to help reduce discoloration of the rubber. If a tire dressing is applied to the tires, it may react with the coating and form a compound. This compound may come off the tire while driving and stain the vehicle paint.

If you choose to use a tire dressing, take the following precautions:

- Use a water-based tire dressing. The coating on the tire dissolves more easily than with an oil-based tire dressing.
- Apply a light coat of tire dressing to help prevent it from entering the tire tread/grooves (where it would be difficult to remove).
- Wipe off excess tire dressing using a dry towel. Make sure the tire dressing is completely removed from the tire tread/grooves.
- Allow the tire dressing to dry as recommended by tire dressing manufacturer.

This vehicle has new and unique surfaces on the center console and door pull finishers. If cleaning is required use mild soap and water. However if mild soap and water won't clean the center console and door pull finishers, use Genuine INFINITI Vinyl and Leather Cleaner (or equivalent).

Occasionally remove loose dust from the interior trim, plastic parts and seats using a vacuum cleaner or soft bristled brush. Wipe the vinyl and leather surfaces with a clean, soft cloth dampened in mild soap solution, then wipe clean with a dry, soft cloth.

Regular care and cleaning is required in order to maintain the appearance of the leather.

Before using any fabric protector, read the manufacturer's recommendations. Some fabric protectors contain chemicals that may stain or bleach the seat material.

Use a cloth dampened only with water to clean the meter and gauge lens.

⚠ WARNING

Do not use water or acidic cleaners (hot steam cleaners) on the seat. This can damage the seat or occupant classification sensor. This can also affect the operation of the air bag system and result in serious personal injury.

⚠ CAUTION

- **Never use benzene, thinner, or any similar material on the interior surfaces or surface damage may occur. Such damage is not covered under the INFINITI warranty.**
- **Small dirt particles can be abrasive and damaging to leather surfaces and should be removed promptly. Do not use saddle soap, car waxes, polishes, oils, cleaning fluids, solvents, detergents or ammonia-based cleaners as they may damage the leather's natural finish.**
- **Never use fabric protectors unless recommended by the manufacturer.**
- **Do not use glass or plastic cleaner on meter or gauge lens covers. It may damage the lens cover.**

AIR FRESHENERS

Most air fresheners use a solvent that could affect the vehicle interior. If you use an air freshener, take the following precautions:

- Hanging-type air fresheners can cause permanent discoloration when they contact vehicle interior surfaces. Place the air freshener in a location that allows it to hang free and not contact an interior surface.
- Liquid-type air fresheners typically clip on the vents. These products can cause immediate damage and discoloration when spilled on interior surfaces.

Carefully read and follow the manufacturer's instructions before using the air fresheners.

POWER MOONROOF

The moonroof is made from a suede material.

⚠ CAUTION

To help prevent damaging the moonroof while cleaning:

- **Do not rub the material with a cloth. Doing so can damage the surface of the material or cause a stain to spread.**
- **Never use benzine, thinner or any similar chemical to clean the suede. This may discolor the moonroof and damage the surface.**

- **Clean water based stains by patting the surface with a clean soft cloth dampened in warm water. Press a clean dry cloth onto the surface to remove as much dampness as possible and then let air dry.**
- **Clean oil based stains by patting the surface with a clean soft cloth dampened in warm water. Press a clean dry cloth onto the surface to remove as much dampness as possible and then let air dry.**

FLOOR MATS (if so equipped)

⚠ WARNING

To avoid potential pedal interference that may result in a collision, injury or death:

- **NEVER place a floor mat on top of another floor mat in the driver front position.**
- **Use only Genuine INFINITI floor mats specifically designed for use in your vehicle model. For additional information, contact an INFINITI retailer.**
- **Properly position the mats in the floorwell using the floor mat positioning aid. For additional information, refer to "Floor mat positioning aid" in this section.**

The use of Genuine INFINITI floor mats can extend the life of your vehicle carpet and make it easier to clean the interior. Mats should be maintained with regular cleaning and replaced if they become excessively worn.

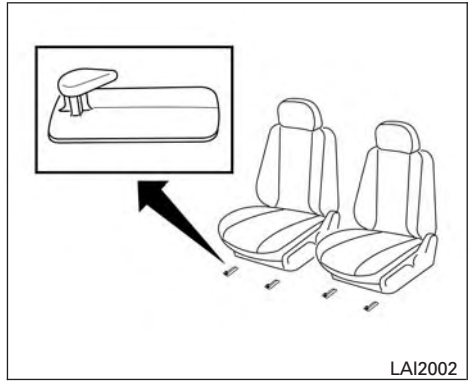

Bracket

Floor mat positioning aid

This vehicle includes the following floor mat positioning aids to help keep your floor mats in place:

- two driver's side front floor mat brackets
- two passenger's side front floor mat brackets
- one driver's side second row floor mat bracket
- one passenger's side second row floor mat bracket

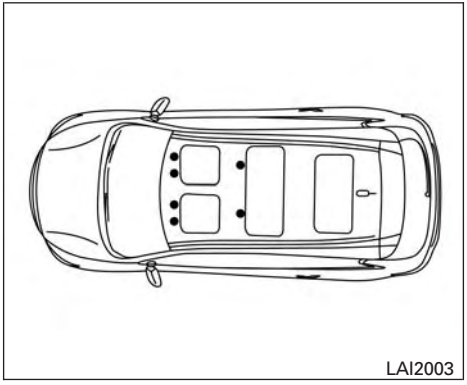

Bracket positions

Genuine NISSAN floor mats have been specially designed for your vehicle model. The floor mats have grommet holes incorporated in them. Position each mat by placing the floor mat bracket hook through the floor mat grommet holes while centering the mat in the floorwell.

Periodically check to make certain the mats are properly positioned.

SEAT BELTS

The seat belts can be cleaned by wiping them with a sponge dampened in a mild soap solution. Allow the belts to dry completely in the shade before using them. For additional information, refer to “Seat belt maintenance” in the “Safety – Seats, seat belts and supplemental restraint system” section of this manual.

⚠ WARNING

Do not allow wet seat belts to roll up in the retractor. NEVER use bleach, dye or chemical solvents to clean the seat belts, since these materials may severely weaken the seat belt webbing.

CLEANING THE SEAT TRACKS

⚠ CAUTION

Periodically clean the seat tracks to prevent reduction of ability to move the seats.

Clean periodically with a high-powered vacuum cleaner. Dirt and debris may reduce the ability to adjust the seat. A wet cleansing agent may be used if necessary.

MOST COMMON FACTORS CONTRIBUTING TO VEHICLE CORROSION

Most vehicle corrosion is caused by:

- the accumulation of moisture-retaining dirt and debris in body panel sections, cavities, and other areas
- damage to paint and other protective coatings caused by gravel and stone chips or minor traffic collisions

ENVIRONMENTAL FACTORS INFLUENCE THE RATE OF CORROSION

Moisture

Accumulation of sand, dirt and water on the vehicle body underside can accelerate corrosion. Wet floor coverings will not dry completely inside the vehicle and should be removed for drying to avoid floor panel corrosion.

Relative humidity

Corrosion will be accelerated in areas of high relative humidity, especially those areas where the temperatures stay above freezing and where atmospheric pollution exists and road salt is used.

Temperature

High temperatures accelerate the rate of corrosion to those parts which are not well ventilated.

Air pollution

Industrial pollution, the presence of salt in the air in coastal areas, or heavy road salt use accelerates the corrosion process. Road salt also accelerates the disintegration of paint surfaces.

PROTECT YOUR VEHICLE FROM CORROSION

- Wash and wax your vehicle often to keep the vehicle clean.
- Always check for minor damage to the paint and repair it as soon as possible.
- Keep drain holes at the bottom of the doors open to avoid water accumulation.
- Check the underbody for accumulation of sand, dirt or salt. If present, wash with water as soon as possible.

⚠ CAUTION

- **NEVER remove dirt, sand or other debris from the passenger compartment by washing it out with a hose. Remove dirt with a vacuum cleaner or broom.**
- **Never allow water or other liquids to come in contact with electronic components inside the vehicle as this may damage them.**

Chemicals used for road surface de-icing are extremely corrosive. They accelerate corrosion and deterioration of underbody components such as the exhaust system, fuel and brake lines, brake cables, floor pan and fenders.

In winter, the underbody must be cleaned periodically.

For additional protection against rust and corrosion, which may be required in some areas, it is recommended that you visit an INFINITI retailer.

MEMO

8 Maintenance and do-it-yourself

Maintenance requirements 8-2
General maintenance 8-2
Explanation of general maintenance items 8-2
Maintenance precautions 8-5
Engine compartment check locations 8-7
Engine cooling system 8-8
Checking engine coolant level 8-9
Changing engine coolant 8-9
Engine oil 8-10
Checking engine oil level 8-10
Changing engine oil 8-11
Changing engine oil filter 8-12
Continuously Variable Transmission (CVT) fluid 8-13
Power steering fluid 8-13
Brake fluid 8-14
Windshield-washer fluid 8-14
Windshield-washer fluid reservoir 8-14
Battery 8-15
Jump starting 8-17
Drive belt 8-17
Spark plugs 8-18
Replacing spark plugs 8-18
Air cleaner 8-18
In-cabin microfilter 8-19
Windshield wiper blades 8-19
Cleaning 8-19
Replacing 8-19
Brakes 8-21
Fuses 8-22
Engine compartment 8-22
Passenger compartment 8-23
Battery replacement 8-24
INFINITI Intelligent Key 8-24
Lights 8-26
Headlights 8-26
Fog lights 8-26
Exterior and interior lights 8-26
Wheels and tires 8-28
Tire pressure 8-28
Tire labeling 8-31
Types of tires 8-34
Tire chains 8-35
Changing wheels and tires 8-36

MAINTENANCE REQUIREMENTS

Your INFINITI has been designed to have minimum maintenance requirements with long service intervals to save you both time and money. However, some day-to-day and regular maintenance is essential to maintain your INFINITI's good mechanical condition, as well as its emissions and engine performance.

It is the owner's responsibility to make sure that the scheduled maintenance, as well as general maintenance, is performed.

As the vehicle owner, you are the only one who can ensure that your vehicle receives proper maintenance. You are a vital link in the maintenance chain.

Scheduled maintenance

For your convenience, both required and optional scheduled maintenance items are described and listed in your "INFINITI Service and Maintenance Guide". You must refer to that guide to ensure that necessary maintenance is performed on your INFINITI at regular intervals.

General maintenance

General maintenance includes those items which should be checked during normal day-to-day operation. They are essential for proper vehicle operation. It is your responsibility to perform these maintenance procedures regularly as prescribed.

Performing general maintenance checks requires minimal mechanical skill and only a few general automotive tools.

These checks or inspections can be done by you, a qualified technician, or, if you prefer, an INFINITI retailer.

Where to go for service

If maintenance service is required or your vehicle appears to malfunction, have the systems checked and corrected. It is recommended that you visit an INFINITI retailer for this service.

INFINITI technicians are well-trained specialists who are kept up-to-date with the latest service information through technical bulletins, service tips, and in-retailer training programs. They are completely qualified to work on INFINITI vehicles **before** they work on your vehicle, rather than after they have worked on it.

You can be confident that an INFINITI retailer's service department performs the best job to meet the maintenance requirements on your vehicle — in a reliable and economical way.

GENERAL MAINTENANCE

During the normal day-to-day operation of the vehicle, general maintenance should be performed regularly as prescribed in this section. If you detect any unusual sounds, vibrations or smell, be sure to check for the cause, or it is recommended that you visit an INFINITI retailer to do it promptly. In addition, it is recommended that you visit an INFINITI retailer if you think that repairs are required.

When performing any checks or maintenance work, closely observe the "Maintenance precautions" in this section.

EXPLANATION OF GENERAL MAINTENANCE ITEMS

Additional information on the following items with " * " is found in this section.

Outside the vehicle

The maintenance items listed here should be performed from time to time, unless otherwise specified.

Doors and engine hood Check that the doors and engine hood operate properly. Also ensure that all latches lock securely. Lubricate hinges, latches, latch pins, rollers and links as necessary. Make sure that the secondary latch keeps the hood from opening when the primary latch is released.

When driving in areas using road salt or other corrosive materials, check lubrication frequently.

Lights* Clean the headlights on a regular basis. Make sure that the headlights, stop lights, tail lights, turn signal lights, and other lights are all operating properly and installed securely. Also check headlight aim.

Road wheel nuts (lug nuts)* When checking the tires, make sure no wheel nuts are missing, and check for any loose wheel nuts. Tighten if necessary.

Tire rotation* Tires should be rotated every 5,000 miles (8,000 km).

Tires* Check the pressure with a gauge often and always prior to long distance trips. If necessary, adjust the pressure in all tires, including the spare, to the pressure specified. Check carefully for damage, cuts or excessive wear.

Tire Pressure Monitoring System (TPMS) transmitter components Replace the TPMS transmitter grommet seal, valve core and cap when the tires are replaced due to wear or age.

Wheel alignment and balance If the vehicle should pull to either side while driving on a straight and level road, or if you detect uneven or abnormal tire wear, there may be a need for wheel alignment. If the steering wheel or seat vibrates at normal highway speeds, wheel balancing may be needed.

- For additional information regarding tires, refer to “Important Tire Safety Information” (US) or “Tire Safety Information” (Canada) in the Warranty Information Booklet.

Windshield Clean the windshield on a regular basis. Check the windshield at least every six months for cracks or other damage. Have a damaged windshield repaired by a qualified repair facility.

Windshield wiper blades* Check for cracks or wear if they do not wipe properly.

Inside the vehicle

The maintenance items listed here should be checked on a regular basis, such as when performing periodic maintenance, cleaning the vehicle, etc.

Additional information on the following items with an “*” is found in this section.

Accelerator pedal Check the pedal for smooth operation and make sure the pedal does not bind or require uneven effort. Keep the floor mat away from the pedal.

Brake pedal Check the pedal for smooth operation. If the brake pedal suddenly goes down further than normal, the pedal feels spongy or the vehicle seems to take longer to stop, have your vehicle checked immediately. It is recommended that you visit an INFINITI retailer for this service. Keep the floor mat away from the pedal.

Brakes Check that the brakes do not pull the vehicle to one side when applied.

Continuously Variable Transmission (CVT) P (Park) position mechanism On a fairly steep hill check that your vehicle is held securely with the shift lever in the P (Park) position without applying any brakes.

Parking brake Check the parking brake operation regularly. The vehicle should be securely held on a fairly steep hill with only the parking brake applied. If the parking brake needs adjustment, it is recommended that you visit an INFINITI retailer for this service

Seats Check seat position controls such as seat adjusters, seatback recliner, etc. to ensure they operate smoothly and all latches lock securely in every position. Check that the head restraints and headrests move up and down smoothly and the locks (if so equipped) hold securely in all latched positions.

Seat belts Check that all parts of the seat belt system (for example, buckles, anchors, adjusters and retractors) operate properly and smoothly, and are installed securely. Check the belt webbing for cuts, fraying, wear or damage.

Steering wheel Check for changes in the steering system, such as excessive freeplay, hard steering or strange noises.

Warning lights and chimes Make sure all warning lights and chimes are operating properly.

Windshield wiper and washer* Check that the wipers and washer operate properly and that the wipers do not streak.

Windshield defogger Check that the air comes out of the defogger outlets properly and in sufficient quantity when operating the heater or air conditioner.

Under the hood and vehicle

The maintenance items listed here should be checked periodically (for example, each time you check the engine oil or refuel).

Battery* Check the fluid level in each cell. It should be between the MAX and MIN lines. Vehicles operated in high temperatures or under severe conditions require frequent checks of the battery fluid level.

NOTE:

Care should be taken to avoid situations that can lead to potential battery discharge and potential no-start conditions such as:

1. Installation or extended use of electronic accessories that consume battery power when the engine is not running (Phone chargers, GPS, DVD players, etc.)
2. Vehicle is not driven regularly and/or only driven short distances. In these cases, the battery may need to be charged to maintain battery health.

Brake fluid level* Make sure that the brake fluid level is between the MIN and MAX lines on the reservoir.

Engine coolant level* Check the coolant level when the engine is cold.

Engine drive belts* Make sure the drive belts are not frayed, worn, cracked or oily.

Engine oil level* Check the level after parking the vehicle on a level surface with the engine off. Wait more than 10 minutes for the oil to drain back into the oil pan.

Exhaust system Make sure there are no loose supports, cracks or holes. If the sound of the exhaust seems unusual or there is a smell of exhaust fumes, immediately have the exhaust system inspected. It is recommended you visit an INFINITI retailer for this service. For additional information, refer to the “Exhaust gas (carbon monoxide)” in the “Starting and driving” section of this manual.

Fluid leaks Check under the vehicle for fuel, oil, water or other fluid leaks after the vehicle has been parked for a while. Water dripping from the air conditioner after use is normal. If you should notice any leaks or if gasoline fumes are evident, check for the cause and have it corrected immediately.

Power steering fluid level* and lines Check the level when the fluid is cold, with the engine off. Check the lines for proper attachment, leaks, cracks, etc.

Radiator and hoses Check the front of the radiator and clean off any dirt, insects, leaves, etc., that may have accumulated. Make sure the hoses have no cracks, deformation, rot or loose connections.

Underbody The underbody is frequently exposed to corrosive substances such as those used on icy roads or to control dust. It is very important to remove these substances from the underbody, otherwise rust may form on the floor pan, frame, fuel lines and exhaust system. At the end of winter, the underbody should be thoroughly flushed with plain water, in those areas

where mud and dirt may have accumulated. For additional information, refer to “Appearance and care” section of this manual.

Windshield-washer fluid* Check that there is adequate fluid in the reservoir.

When performing any inspection or maintenance work on your vehicle, always take care to prevent serious accidental injury to yourself or damage to the vehicle. The following are general precautions which should be closely observed.

⚠ WARNING

- **Park the vehicle on a level surface, apply the parking brake securely and block the wheels to prevent the vehicle from moving. Move the shift lever to P (Park).**
- **Be sure the ignition switch is in the OFF or LOCK position when performing any parts replacement or repairs.**
- **If you must work with the engine running, keep your hands, clothing, hair and tools away from moving fans, belts and any other moving parts.**
- **It is advisable to secure or remove any loose clothing and remove any jewelry, such as rings, watches, etc. before working on your vehicle.**
- **Always wear eye protection whenever you work on your vehicle.**
- **Your vehicle is equipped with an automatic engine cooling fan. It may come on at any time without warning, even if the ignition switch is in the OFF position and the engine is not running. To avoid injury, always disconnect the negative battery cable before working near the fan.**
- **If you must run the engine in an enclosed space such as a garage, be sure there is proper ventilation for exhaust gases to escape.**
- **Never get under the vehicle while it is supported only by a jack. If it is necessary to work under the vehicle, support it with safety stands.**
- **Keep smoking materials, flame and sparks away from the fuel tank and battery.**
- **Because the fuel lines on gasoline engine models are under high pressure even when the engine is off, it is recommended that you visit an INFINITI retailer for service of the fuel filter or fuel lines.**

⚠ CAUTION

- **Do not work under the hood while the engine is hot. Turn the engine off and wait until it cools down.**
- **Avoid contact with used engine oil and coolant. Improperly disposed engine oil, engine coolant and/or other vehicle fluids can damage the environment. Always conform to local regulations for disposal of vehicle fluid.**
- **Never leave the engine or Continuously Variable Transmission (CVT) related component harnesses disconnected while the ignition switch is in the ON position.**
- **Never connect or disconnect the battery or any transistorized component while the ignition switch is in the ON position.**

This "Maintenance and do-it-yourself" section gives instructions regarding only those items which are relatively easy for an owner to perform.

A Genuine INFINITI service manual is also available. For additional information, refer to "Owner's Manual/Service Manual order information" in the "Technical and consumer information" section of this manual.

You should be aware that incomplete or improper servicing may result in operating difficulties or excessive emissions, and could affect warranty coverage. **If in doubt about any servicing, it is recommended that you have it done by an INFINITI retailer.**

ENGINE COMPARTMENT CHECK LOCATIONS

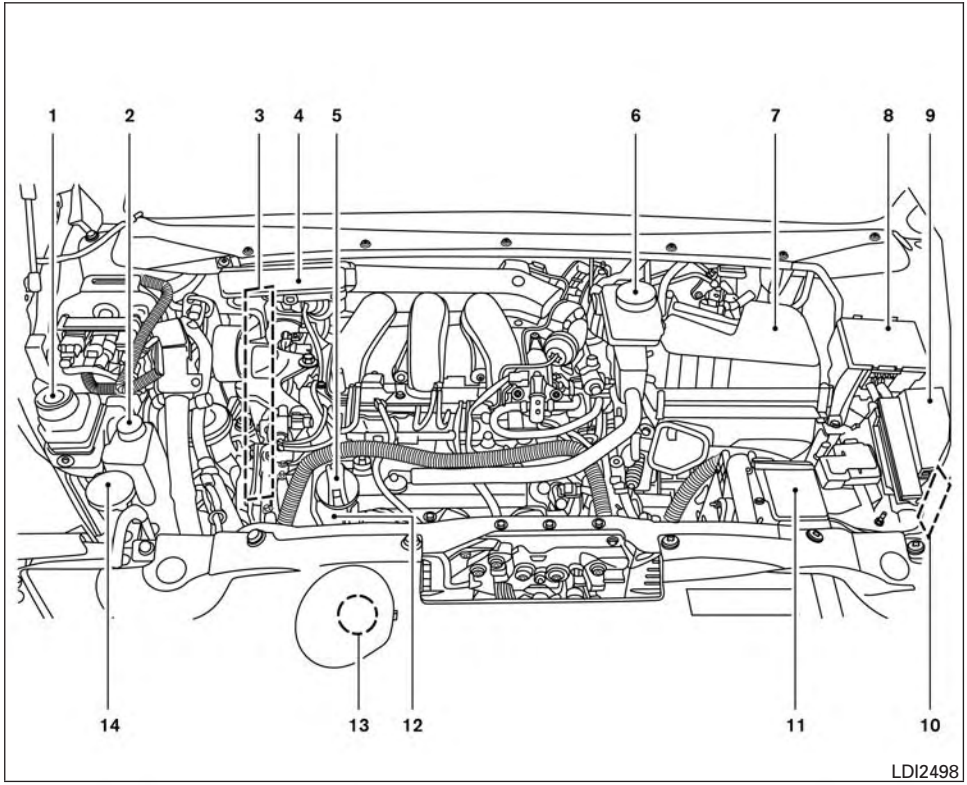

VQ35DE engine

1. Power steering fluid reservoir
2. Engine coolant reservoir
3. Drive belt location
4. Fuse box
5. Engine oil filler cap
6. Brake fluid reservoir
7. Air cleaner
8. Fuse box
9. Fuse/Fusible link box
10 Fuse/Fusible link box
11. Battery
12. Engine oil dipstick
13. Radiator cap
14. Windshield-washer fluid reservoir

NOTE:

Engine cover removed for clarity.

ENGINE COOLING SYSTEM

The engine cooling system is filled at the factory with a pre-diluted mixture of 50% Genuine NISSAN Long Life Antifreeze/Coolant (blue) and 50% water to provide year-round antifreeze and coolant protection. The antifreeze solution contains rust and corrosion inhibitors. Additional engine cooling system additives are not necessary.

⚠ WARNING

- **Never remove the radiator or coolant reservoir cap when the engine is hot. Wait until the engine and radiator cool down. Serious burns could be caused by high pressure fluid escaping from the radiator. For additional information on precautions, refer to "If your vehicle overheats" found in the "In case of emergency" section of this manual.**
- **The radiator is equipped with a pressure type radiator cap. To prevent engine damage, use only a Genuine NISSAN radiator cap.**

⚠ CAUTION

- **Never use any cooling system additives such as radiator sealer. Additives may clog the cooling system and cause damage to the engine, transmission and/or cooling system.**
- **When adding or replacing coolant, be sure to use only Genuine NISSAN Long Life Antifreeze/Coolant (blue) or equivalent. Genuine NISSAN Long Life Antifreeze/Coolant (blue) is pre-diluted to provide antifreeze protection to -34° F (-37° C). If additional freeze protection is needed due to weather where you operate your vehicle, add Genuine NISSAN Long Life Antifreeze/Coolant (blue) concentrate following the directions on the container. If an equivalent coolant other than Genuine NISSAN Long Life Antifreeze/Coolant (blue) is used, follow the coolant manufacturer's instructions to maintain minimum antifreeze protection to -34° F (-37° C). The use of other types of coolant solutions other than Genuine NISSAN Long Life Antifreeze/Coolant (blue) or equivalent may damage the engine cooling system.**
- **The life expectancy of the factory-fill coolant is 105,000 miles (168,000 km) or 7 years. Mixing any other type of coolant other than Genuine NISSAN Long Life Antifreeze/Coolant (blue), including Genuine NISSAN Long Life Antifreeze/Coolant (green), or the use of non-distilled water will reduce the life expectancy of the factory-fill coolant. For additional information, refer to the INFINITI Service and Maintenance Guide.**

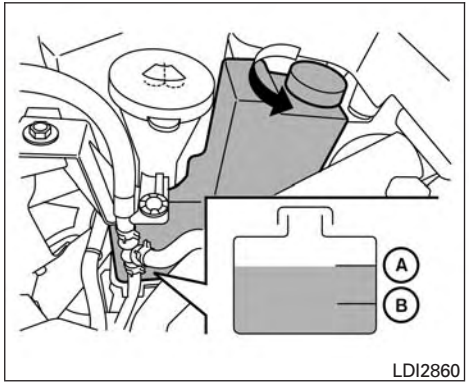

CHECKING ENGINE COOLANT LEVEL

Check the coolant level **in the reservoir when the engine is cold.** If the coolant level is below the MIN level Ⓑ, add coolant to the MAX level Ⓐ. If the reservoir is empty, check the coolant level in the radiator **when the engine is cold.** If there is insufficient coolant in the radiator, fill the radiator with coolant up to the filler opening and also add it to the reservoir up to the MAX level Ⓐ.

This vehicle contains Genuine NISSAN Long Life Antifreeze/Coolant (blue). The life expectancy of the factory-fill coolant is 105,000 miles (168,000 km) or 7 years. Mixing any other type of coolant or the use of non-distilled water will reduce the life expectancy of the factory-fill coolant. For additional information, refer to the “INFINITI Service and Maintenance Guide”.

If the cooling system frequently requires coolant, have it checked. It is recommended that you visit an INFINITI retailer for this service.

For additional information on the location of the engine coolant reservoir, refer to “Engine compartment check locations” in this section.

CHANGING ENGINE COOLANT

An INFINITI retailer can change the engine coolant. The service procedure can be found in the INFINITI Service Manual.

Improper servicing can result in reduced heater performance and engine overheating.

⚠ WARNING

- **To avoid the danger of being scalded, never change the coolant when the engine is hot.**
- **Never remove the radiator or engine coolant reservoir cap when the engine is hot. Serious burns could be caused by high pressure fluid escaping from the radiator.**
- **Avoid direct skin contact with used coolant. If skin contact is made, wash thoroughly with soap or hand cleaner as soon as possible.**
- **Keep coolant out of the reach of children and pets.**

Engine coolant must be disposed of properly. Check your local regulations.

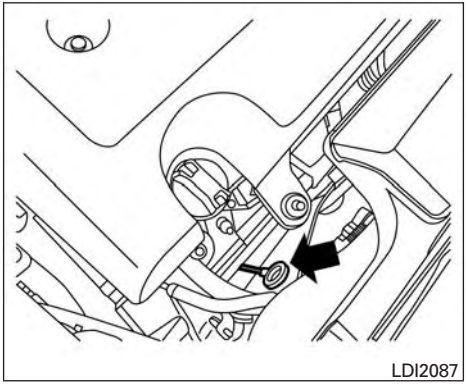
LDI2087

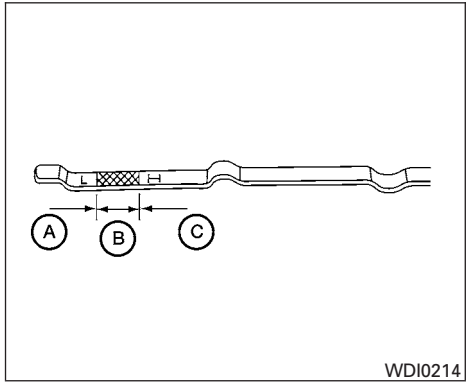

WDI0214

CHECKING ENGINE OIL LEVEL

1. Park the vehicle on a level surface and apply the parking brake.
2. Start the engine and let it idle until it reaches operating temperature.
3. Turn off the engine. **Wait more than 10 minutes for the oil to drain back into the oil pan.**
4. Remove the dipstick and wipe it clean. Reinsert it all the way.
5. Remove the dipstick again and check the oil level. It should be between the H (High) and L (Low) marks Ⓑ. This is the normal operating oil level range. If the oil level is below the L (Low) mark Ⓐ, remove the oil filler cap and pour recommended oil through the opening. **Do not fill oil level above H (High) mark Ⓒ.**
6. Recheck the oil level with the dipstick.

It is normal to add some oil between oil maintenance intervals or during the break-in period, depending on the severity of operating conditions.

⚠ CAUTION

Oil level should be checked regularly. Operating the engine with an insufficient amount of oil can damage the engine, and such damage is not covered by warranty.

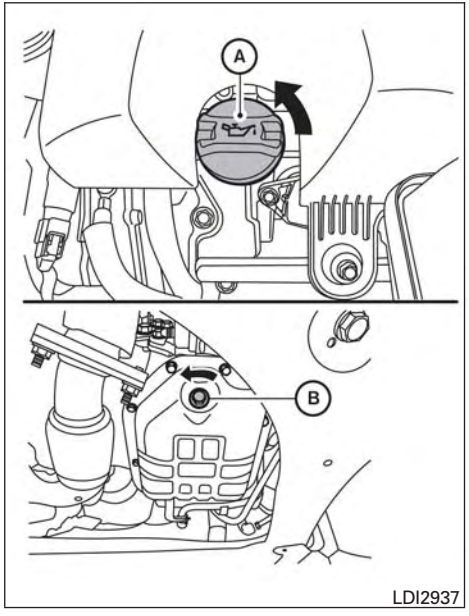

CHANGING ENGINE OIL

⚠ WARNING

- **Prolonged and repeated contact with used engine oil may cause skin cancer.**
- **Try to avoid direct skin contact with used oil. If skin contact is made, wash thoroughly with soap or hand cleaner as soon as possible.**
- **Keep used engine oil out of reach of children.**

⚠ CAUTION

Be careful not to burn yourself. The engine oil may be hot.

1. Park the vehicle on a level surface and apply the parking brake.
2. Start the engine and let it idle until it reaches operating temperature, then turn it off.
3. Remove the oil filler cap Ⓐ by turning it counterclockwise.
4. Place a large drain pan under the drain plug Ⓑ.
5. Remove the drain plug Ⓑ with a wrench by turning it counterclockwise and completely drain the oil.

   If the oil filter is to be changed, remove and replace it at this time. For additional information, refer to “Changing engine oil filter” in this section.

- **Waste oil must be disposed of properly.**
- **Check your local regulations.**

6. Clean and reinstall the drain plug and a new washer. Securely tighten the drain plug with a wrench. Do not use excessive force.

   Drain plug tightening torque:
   25 ft-lb (34 N·m)

7. Refill engine with recommended oil through the oil filler opening, then install the oil filler cap securely.

   For additional information on drain and refill capacity, refer to “Recommended fluids/lubricants and capacities” in the “Technical and consumer information” section of this manual.

   The drain and refill capacity depends on the oil temperature and drain time. Use these specifications for reference only. Always use the dipstick to determine when the proper amount of oil is in the engine.

8. Start the engine. Check for leakage around the drain plug and oil filter. Correct as required.
9. Turn the engine off and wait more than 10 minutes. Check the oil level with the dipstick. Add engine oil if necessary.

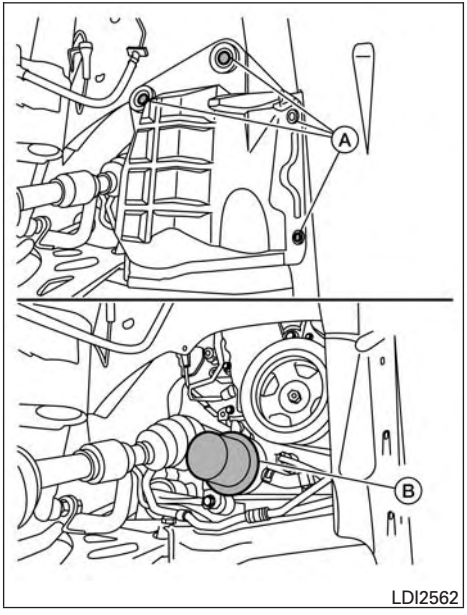

CHANGING ENGINE OIL FILTER

1. Park the vehicle on a level surface and apply the parking brake.
2. Turn the engine off.
3. Place a large drain pan under the oil filter Ⓑ.
4. Remove pins Ⓐ from the right engine protector located inside right wheel well, remove protector. Remove oil filter Ⓑ with an oil filter wrench by turning it counterclockwise. Then remove the oil filter by turning it by hand.

⚠ CAUTION

Be careful not to burn yourself. The engine oil may be hot.

5. Wipe the engine oil filter sealing surface with a clean rag.

⚠ CAUTION

- **Be sure to remove any old gasket material remaining on the sealing surface of the engine. Failure to do so could lead to an oil leak and engine damage.**
- **The dipstick must be inserted in place to prevent oil spillage from the dipstick hole when filling the engine with oil.**

6. Coat the gasket on the new filter with clean engine oil.
7. Screw on the oil filter until a slight resistance is felt, then tighten an additional 2/3 turn.
8. Start the engine and check for leakage around the oil filter. Correct as required.
9. Turn the engine off and wait more than 10 minutes. Check the oil level. Add engine oil if necessary.

CONTINUOUSLY VARIABLE TRANSMISSION (CVT) FLUID

⚠ CAUTION

- **INFINITI recommends using Genuine NISSAN CVT Fluid NS-3 (or equivalent) ONLY in INFINITI CVTs. Do not mix with other fluids.**
- **Do not use Automatic transmission fluid (ATF) or Manual transmission fluid in an INFINITI CVT, as it may damage the CVT. Damage caused by the use of fluids other than as recommended is not covered under INFINITI's New Vehicle Limited Warranty.**
- **Using fluids that are not equivalent to Genuine NISSAN CVT Fluid NS-3 may also damage the CVT. Damage caused by the use of fluids other than as recommended is not covered under INFINITI's New Vehicle Limited Warranty.**

When checking or replacement of CVT fluid is required, we recommend an INFINITI retailer for servicing.

POWER STEERING FLUID

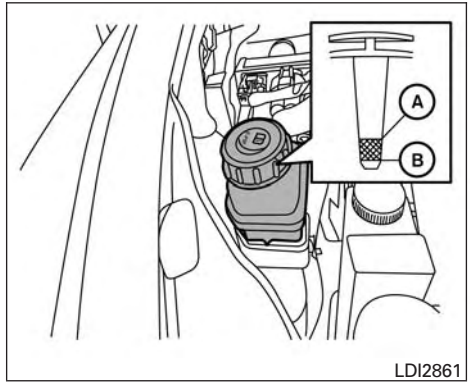

Check the fluid level in the reservoir.

The fluid level should be checked when the fluid is cold at fluid temperatures of 32 to 86°F (0 to 30°C). The fluid level can be checked with the level gauge which is attached to the cap. To check the fluid level, remove the cap. The fluid level should be between the MAX Ⓐ and MIN Ⓑ lines.

If the fluid is below the MIN Ⓑ line, add Genuine NISSAN E-PSF or equivalent. Remove the cap and fill through the opening.

⚠ WARNING

Power steering fluid is poisonous and should be stored carefully in marked containers out of the reach of children.

⚠ CAUTION

- **DO NOT OVERFILL.**
- **Use of a power steering fluid other than Genuine NISSAN E-PSF or equivalent will prevent the power steering system from operating properly.**

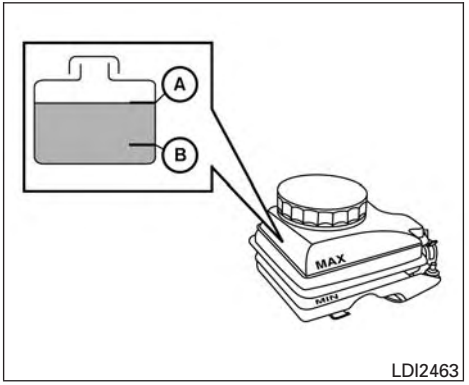

LDI2463

WARNING

- **Use only new fluid from a sealed container. Old, inferior or contaminated fluid may damage the brake system. The use of improper fluids can damage the brake system and affect the vehicle's stopping ability.**
- **Clean the filler cap before removing.**
- **Brake fluid is poisonous and should be stored carefully in marked containers out of reach of children.**

CAUTION

Do not spill the fluid on any painted surfaces. This will damage the paint. If fluid is spilled, immediately wash the surface with water.

Check the fluid level in the reservoir. If the brake fluid is below the MIN line Ⓑ, the brake warning light will illuminate. Add brake fluid up to the MAX line Ⓐ. For additional information on the recommended type of brake fluid, refer to "Recommended fluids/lubricants and capacities" in the "Technical and consumer information" section of this manual.

If the brake fluid must be added frequently, the brake system should be thoroughly checked. It is recommended that you visit an INFINITI retailer for this service.

For additional information on the location of the brake fluid reservoir, refer to "Engine compartment check locations" in this section.

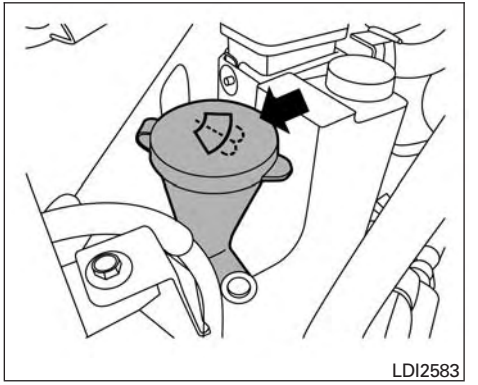
LDI2583

WINDSHIELD-WASHER FLUID RESERVOIR

Fill the windshield-washer fluid reservoir periodically. Add windshield-washer fluid when the low windshield-washer fluid warning light comes on.

To fill the windshield-washer fluid reservoir, lift the cap off the reservoir and pour the windshield-washer fluid into the reservoir opening.

Add a washer solvent to the washer for better cleaning. In the winter season, add a windshield-washer antifreeze. Follow the manufacturer's instructions for the mixture ratio.

Refill the reservoir more frequently when driving conditions require an increased amount of windshield-washer fluid.

Recommended fluid is Genuine NISSAN Windshield Washer Concentrate Cleaner & Antifreeze or equivalent.

⚠CAUTION

- **Do not substitute engine antifreeze coolant for windshield-washer fluid. This may result in damage to the paint.**
- **Do not fill the windshield-washer fluid reservoir with washer fluid concentrates at full strength. Some methyl alcohol based washer fluid concentrates may permanently stain the grille if spilled while filling the windshield-washer fluid reservoir.**
- **Pre-mix washer fluid concentrates with water to the manufacturer's recommended levels before pouring the fluid into the windshield-washer fluid reservoir. Do not use the windshield-washer fluid reservoir to mix the washer fluid concentrate and water.**

- Keep the battery surface clean and dry. Clean the battery with a solution of baking soda and water.
- Make certain the terminal connections are clean and securely tightened.
- If the vehicle is not to be used for 30 days or longer, disconnect the negative (-) battery terminal cable to prevent discharge.

NOTE:

Care should be taken to avoid situations that can lead to potential battery discharge and potential no-start conditions such as:

1. Installation or extended use of electronic accessories that consume battery power when the engine is not running (Phone chargers, GPS, DVD players, etc).
2. Vehicle is not driven regularly and/or only driven short distances. In these cases, the battery may need to be charged to maintain battery health.

⚠WARNING

- **Do not expose the battery to flames, an electrical spark or a cigarette. Hydrogen gas generated by the battery is explosive. Explosive gases can cause blindness or injury. Do not allow battery fluid to contact your skin, eyes, fabrics or painted surfaces. Sulfuric acid can cause blindness or injury. After touching a battery or battery cap, do not touch or rub your eyes. Thoroughly wash your hands. If the acid contacts your eyes, skin or clothing, immediately flush with water for at least 15 minutes and seek medical attention.**
- **Do not operate the vehicle if the fluid in the battery is low. Low battery fluid can cause a higher load on the battery which can generate heat, reduce battery life, and in some cases lead to an explosion.**
- **When working on or near a battery, always wear suitable eye protection and remove all jewelry.**
- **Battery posts, terminals and related accessories contain lead and lead compounds. Wash hands after handling.**

- **Keep battery out of the reach of children.**
- **Do not tip the battery. Keep the vent caps tight and the battery level.**

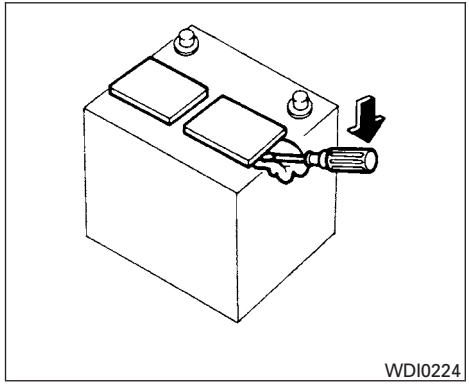

1. Remove the vent caps with a screwdriver as shown. Use a cloth to protect the battery case.

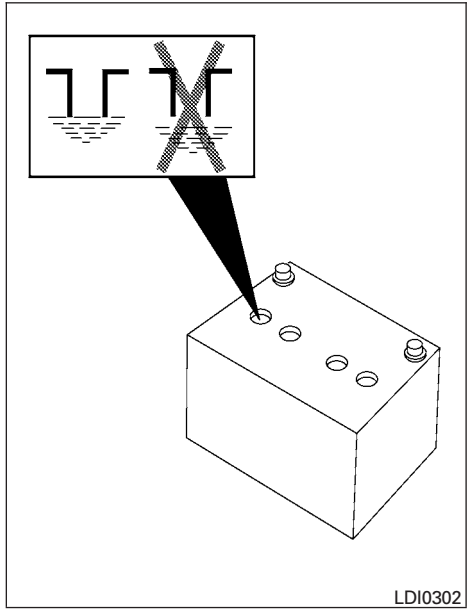

2. Check the fluid level in each cell. If it is necessary to add fluid, add only distilled water to bring the level up to the bottom of the filler opening. **Do not overfill.** Reinstall the vent caps.

Vehicles operated in high temperatures or under severe conditions require frequent checks of the battery fluid level.

JUMP STARTING

If jump starting is necessary, refer to “Jump starting” in the “In case of emergency” section of this manual. If the engine does not start by jump starting, the battery may have to be replaced. It is recommended that you visit an INFINITI retailer for this service.

DRIVE BELT

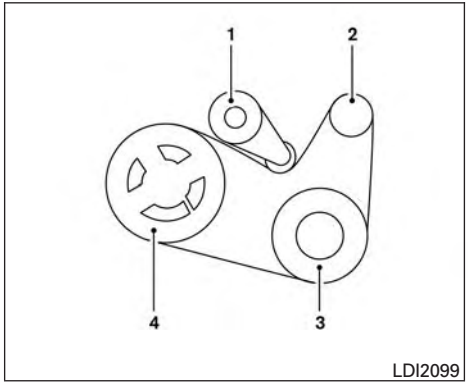

1. Drive belt automatic tensioner pulley
2. Generator pulley
3. Air conditioner compressor pulley
4 Crankshaft pulley

⚠ WARNING

Be sure the ignition key is in the OFF or LOCK position before servicing drive belt. The engine could rotate unexpectedly.

1. Visually inspect the belt for signs of unusual wear, cuts, fraying or looseness. If the belt is in poor condition or is loose, have it replaced or adjusted. It is recommended that you visit an INFINITI retailer for this service.
2. Have the belt checked regularly for condition and tension in accordance with the maintenance schedule found in your “INFINITI Service and Maintenance Guide”.

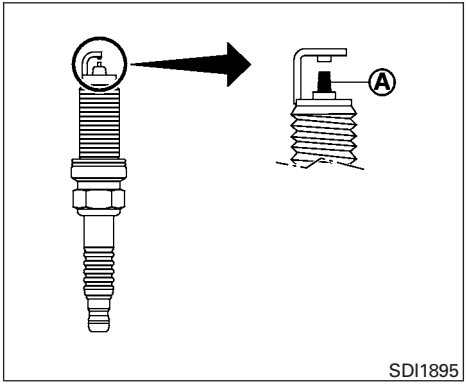

SDI1895

REPLACING SPARK PLUGS

Iridium-tipped spark plugs

It is not necessary to replace iridium-tipped Ⓐ spark plugs as frequently as conventional type spark plugs because they last much longer. Follow the maintenance log shown in the “INFINITI Service and Maintenance Guide”. Do not service iridium-tipped spark plugs by cleaning or regapping.

- **Always replace spark plugs with recommended or equivalent ones.**

⚠ WARNING

Be sure the engine and ignition switch are off and that the parking brake is engaged securely.

⚠ CAUTION

Be sure to use the correct socket to remove the spark plugs. An incorrect socket can damage the spark plugs.

If replacement is required, it is recommended that you visit an INFINITI retailer for this service.

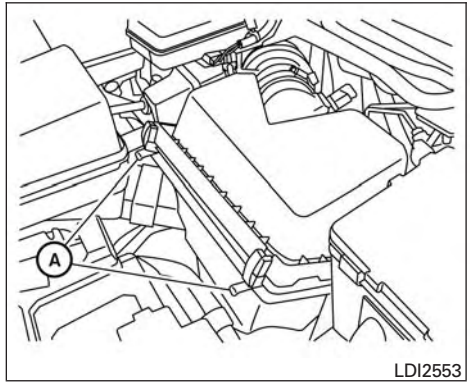

LDI2553

⚠ WARNING

- **Operating the engine with the air cleaner filter off can cause you or others to be burned. The air cleaner filter not only cleans the intake air, it also stops the flame if the engine backfires. If the air cleaner is not installed and the engine backfires, you could be burned. Never drive with the air cleaner filter off. Be cautious working on the engine when the air cleaner is off.**

- **Never pour fuel into the throttle body or attempt to start the engine with the air cleaner removed. Doing so could result in serious injury.**

To remove the filter from the air cleaner, push the tabs Ⓐ and pull the cover upward.

The viscous paper type filter element should not be cleaned and reused. Replace the air filter according to the maintenance log shown in the "INFINITI Service and Maintenance Guide."

When replacing the air filter, wipe the inside of the air cleaner housing and the cover with a damp cloth.

NOTE:

After installing a new air cleaner, make sure the air cleaner cover is seated in the housing and latch the clips Ⓐ.

IN-CABIN MICROFILTER

The in-cabin microfilter restricts the entry of airborne dust and pollen particles and reduces some objectionable outside odors. The filter is located behind the glove box. Refer to the "INFINITI Service and Maintenance Guide" for change intervals.

If replacement is required, it is recommended that you visit an INFINITI retailer for this service.

CLEANING

If your windshield is not clear after using the windshield-washer or if a wiper blade chatters when running, wax or other material may be on the blade or windshield.

Clean the outside of the windshield with a washer solution or a mild detergent. Your windshield is clean if beads do not form when rinsing with clear water.

Clean each blade by wiping it with a cloth soaked in a washer solution or a mild detergent. Then rinse the blades with clear water. If your windshield is still not clear after cleaning the blades and using the wiper, replace the blades.

⚠ CAUTION

Worn windshield wiper blades can damage the windshield and impair driver vision.

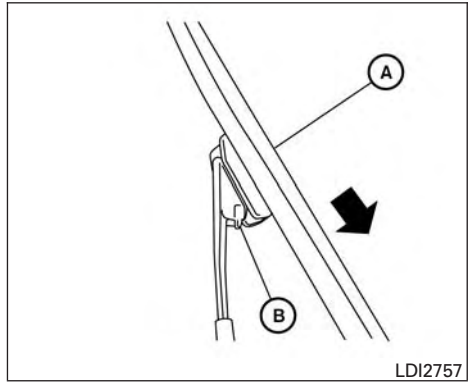

REPLACING

Replace the wiper blades if they are worn.

To replace the windshield wiper blades, follow the procedure below:

1. Lift the wiper arm away from the windshield.
2. Push the release tab Ⓑ.
3. Move the wiper blade Ⓐ down and remove.
4. Insert the new wiper blade onto the wiper arm until it clicks into place.
5. Push wiper on to windshield.

CAUTION

- **After wiper blade replacement, return the wiper arm to its original position; otherwise it may be damaged when the hood is opened.**
- **Make sure the wiper blades contact the glass; otherwise the arms may be damaged from wind pressure.**

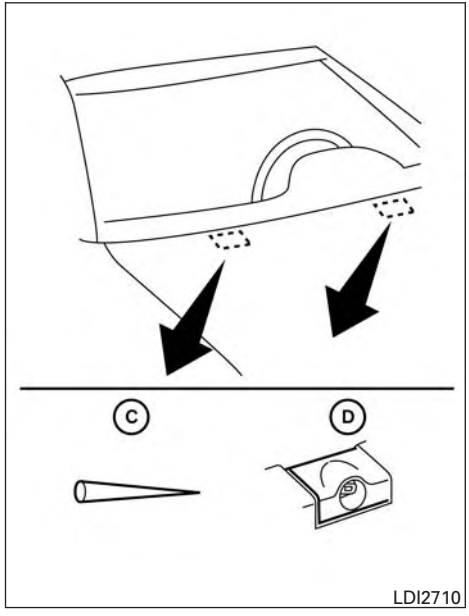

If you wax the surface of the hood, be careful not to let wax get into the washer nozzle Ⓓ. This may cause clogging or improper windshield-washer operation. If wax gets into the nozzle, remove it with a needle or small pin Ⓒ.

Rear window wiper blade

If checking or replacement is required, it is recommended that you visit an INFINITI retailer for this service.

If the brakes do not operate properly, it is recommended that you have the brakes checked. It is recommended that you visit an INFINITI retailer for this service.

Self-adjusting brakes

Your vehicle is equipped with self-adjusting brakes.

The front and rear disc-type brakes self-adjust every time the brake pedal is applied.

⚠ WARNING

Have your brake system checked if the brake pedal height does not return to normal. It is recommended that you visit an INFINITI retailer for this service.

Brake pad wear indicators

The disc brake pads on your vehicle have audible wear indicators. When a brake pad requires replacement, a high pitched scraping or screeching sound will be heard when the vehicle is in motion. The noise will be heard whether or not the brake pedal is depressed. Have the brakes checked as soon as possible if the wear indicator sound is heard.

Under some driving or climate conditions, occasional brake squeak, squeal or other noise may be heard. Occasional brake noise during light to moderate stops is normal and does not affect the function or performance of the brake system.

Proper brake inspection intervals should be followed. For additional information regarding brake inspections, refer to the appropriate maintenance schedule information in the “INFINITI Service and Maintenance Guide”.

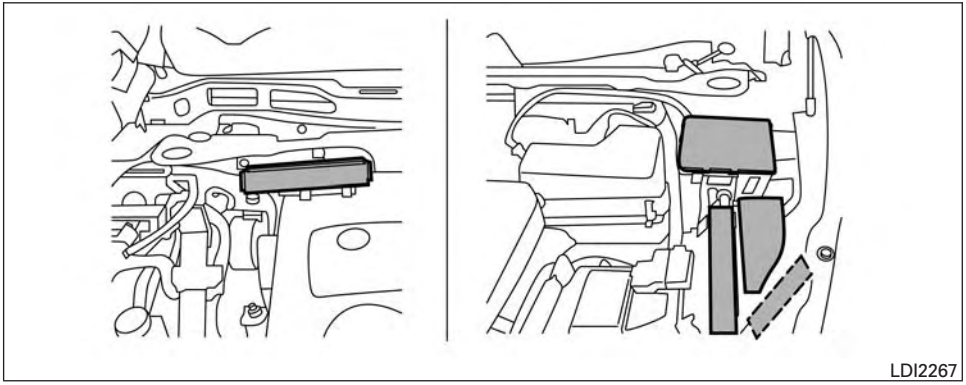

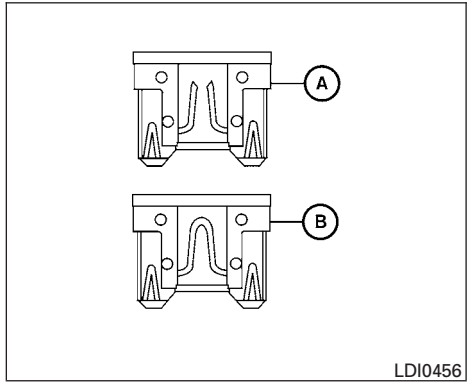

ENGINE COMPARTMENT

⚠WARNING

Never use a fuse of higher or lower amperage rating than that specified on the fuse box cover. This could damage the electrical system or electronic control units or cause a fire.

If any electrical equipment does not come on, check for an open fuse.

1. Be sure the ignition switch and the headlight switch are OFF.
2. Open the engine hood.
3. Remove the fuse box cover by pushing the tab and lifting the cover up.
4. Remove the fuse with the fuse puller. The fuse puller is located in the fuse block in the passenger compartment.
5. If the fuse is open Ⓐ, replace it with a new fuse Ⓑ.
6. If a new fuse also opens, have the electrical system checked and repaired. It is recommended that you visit an INFINITI retailer for this service.

Fusible links

If the electrical equipment does not operate and fuses are in good condition, check the fusible links. If any of these fusible links are melted, replace with only Genuine NISSAN parts.

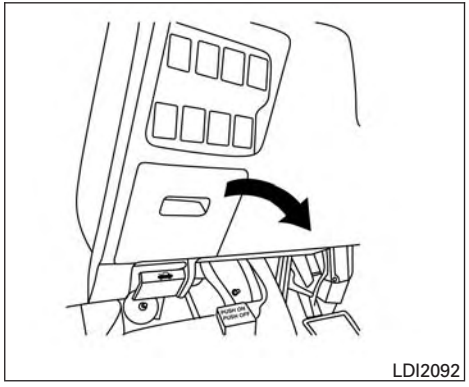

PASSENGER COMPARTMENT

⚠ WARNING

Never use a fuse of higher or lower amperage rating than that specified on the fuse box cover. This could damage the electrical system or electronic control units or cause a fire.

If any electrical equipment does not operate, check for an open fuse.

1. Be sure the ignition switch and the headlight switch are OFF.
2. Pull the fuse box cover to remove.
3. Remove the fuse with the fuse puller.

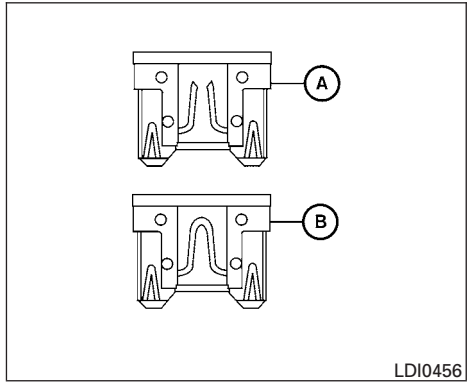

4. If the fuse is open Ⓐ, replace it with an equivalent good fuse Ⓑ.
5. Push the fuse box cover to install.
6. If a new fuse also opens, have the electrical system checked and repaired. It is recommended that you visit an INFINITI retailer for this service.

⚠ CAUTION

Be careful not to allow children to swallow the battery or removed parts.

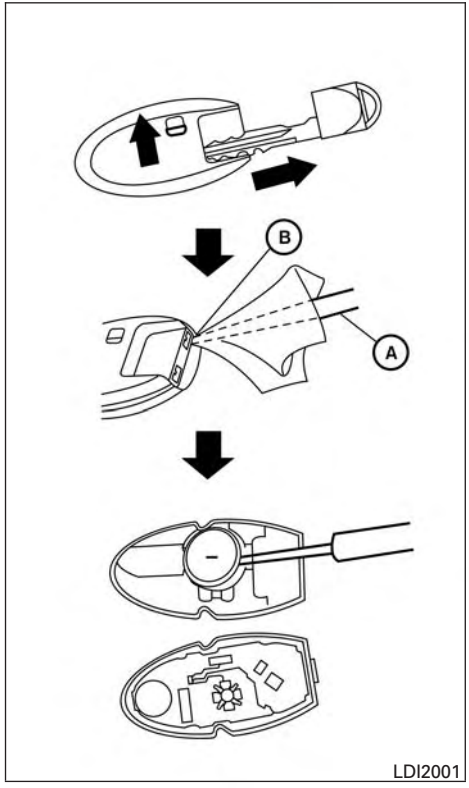

INFINITI INTELLIGENT KEY

Replace the battery in the Intelligent Key as follows:

1. Remove the mechanical key from the Intelligent Key.
2. Insert a small flathead screwdriver Ⓐ into the slit Ⓑ of the corner and twist it to separate the upper part from the lower part. Place a cloth over the screwdriver to protect the casing.

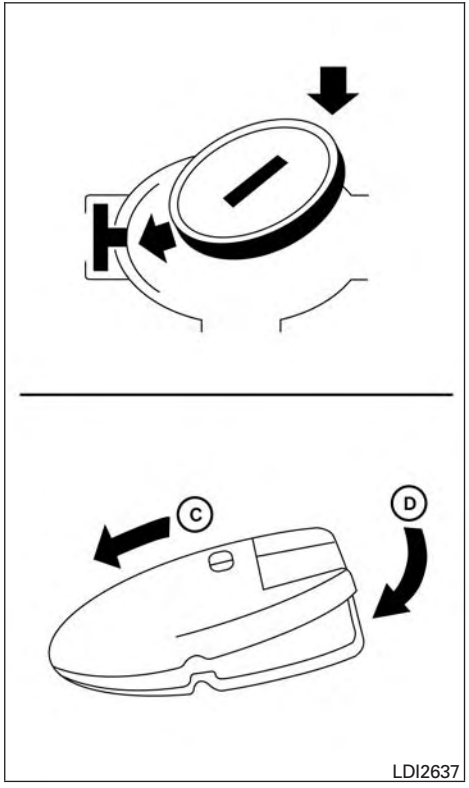

3. Replace the battery with a new one.

   Recommended battery: CR2032 or equivalent.

   - Do not touch the internal circuit and electric terminals as doing so could cause a malfunction.
   - Hold the battery by the edges. Holding the battery across the contact points will seriously deplete the storage capacity.
   - Make sure that the + side faces the bottom of the lower part.

4. Close the lid securely as illustrated with Ⓒ and Ⓓ.
5. Operate the buttons to check the operation.

If you need assistance with replacement, it is recommended that you visit an INFINITI retailer for this service.

FCC Notice:

For USA:
This device complies with Part 15 of the FCC Rules. Operation is subject to the following two conditions: (1) This device may not cause harmful interference, and (2) this device must accept any interference received, including interference that may cause undesired operation.

Note: Changes or modifications not expressly approved by the party responsible for compliance could void the user's authority to operate the equipment.

For Canada:
This device complies with Industry Canada licence-exempt RSS standard(s). Operation is subject to the following two conditions: (1) this device may not cause interference, and (2) this device must accept any interference, including interference that may cause undesired operation of the device.

HEADLIGHTS

Replacing the xenon headlight bulb

If replacement is required, it is recommended that you visit an INFINITI retailer for this service.

WARNING

HIGH VOLTAGE

When xenon headlights are on, they produce a high voltage. To prevent an electric shock, never attempt to modify or disassemble. Always have your xenon headlights replaced by a certified service technician. For additional information, refer to "Headlight and turn signal switch" in the "Instruments and controls" section of this manual.

FOG LIGHTS

Replacing the LED fog light bulb

If LED fog light bulb replacement is required, it is recommended that you visit an INFINITI retailer for this service.

EXTERIOR AND INTERIOR LIGHTS

Item	Wattage (W)	Bulb No.
Headlight assembly (Type A) (if so equipped)*		
High/ Low	35	D2S
Park/Daytime running	—	—
Turn	28/8	7444NA
Side marker	—	—
Headlight assembly (Type B) (if so equipped)*		
High/ Low	35	D2S
Park/Daytime running	—	—
Turn	21	WY21W
Door mirror turn signal light*	—	—
Front fog light	—	—
Map light*	8	—
Footwell light*	3.4	158
Personal light*	8	—
Glove box light*	—	—
Step light*	3.8	194
Courtesy light*	—	—
Puddle light*	—	—
Vanity mirror light*	—	—
Cargo light*	8	—
High-mounted stop light*	—	—
Rear combination light		
Tail/Stop*	—	—
Turn	21	W21W
Backup (reversing) assembly*		
Backup	18	921
Tail	—	—
License plate light*	5	W5W

* It is recommended you visit an INFINITI retailer for replacement.

Always check with the Parts Department at an INFINITI retailer for the latest parts information.

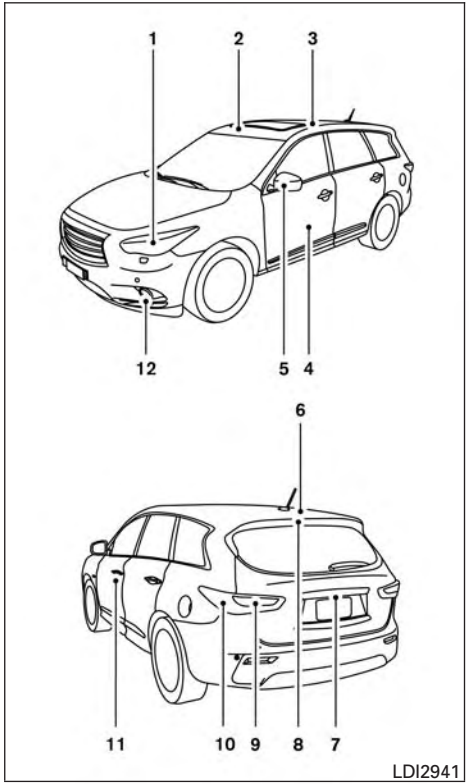

1. Headlight assembly
2 Map light
3 Personal light
4 Step light
5. Door mirror turn signal light
6. Cargo light
7. License light
8. High-mounted stop light
9. Backup (reversing) assembly
10. Rear combination light
11. Puddle light
12. Fog light

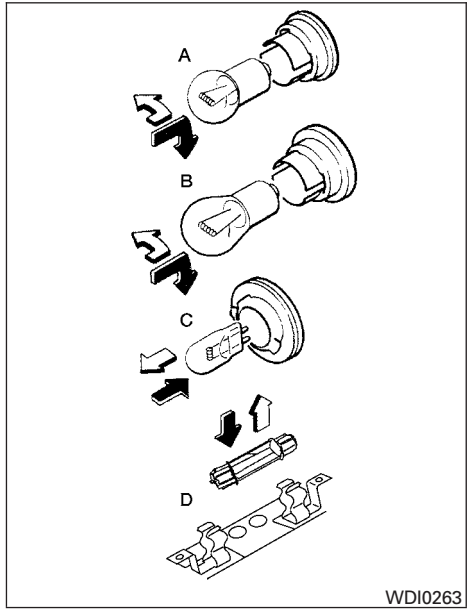

Replacement procedures

All other lights are either type A, B, C or D. When replacing a bulb, first remove the lens, light and/or cover using a cloth and suitable tool.

⇧ Indicates bulb removal

⬆ Indicates bulb installation

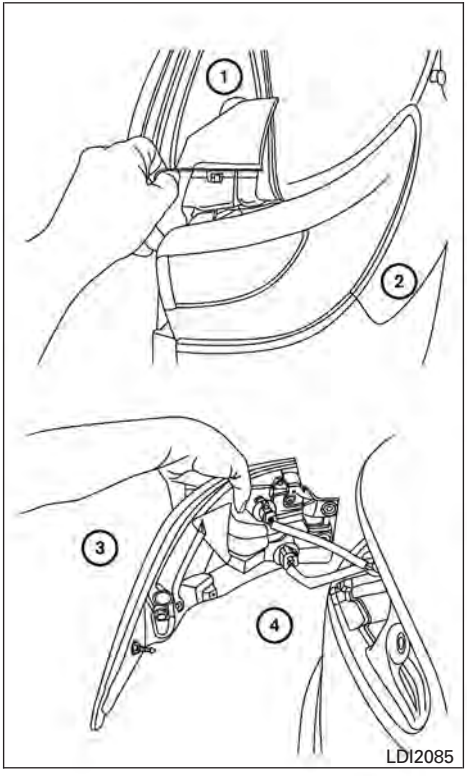

Rear combination light

1. Remove the trim surrounding ① the housing.
2. Remove the two screws holding the assembly ② to the vehicle.
3. Remove the assembly ③.
4. Replace the necessary bulbs ④.

If you have a flat tire, refer to "Flat tire" in the "In case of emergency" section of this manual.

TIRE PRESSURE

Tire Pressure Monitoring System (TPMS)

⚠WARNING

Radio waves could adversely affect electric medical equipment. Those who use a pacemaker should contact the electric medical equipment manufacturer for the possible influences before use.

This vehicle is equipped with the Tire Pressure Monitoring System (TPMS). It monitors tire pressure of all tires except the spare. When the low tire pressure warning light is lit and the "Tire Pressure Low – Add Air" warning appears in the vehicle information display, one or more of your tires is significantly under-inflated. If equipped, the system also displays pressure of all tires (except the spare tire) on the display screen by sending a signal from a sensor that is installed in each wheel.

The TPMS will activate only when the vehicle is driven at speeds above 16 mph (25 km/h). Also, this system may not detect a sudden drop in tire pressure (for example a flat tire while driving).

For additional information, refer to “Low tire pressure warning light” in the “Instruments and controls” section, “Tire Pressure Monitoring System (TPMS)” in the “Starting and driving” section and “Flat tire” in the “In case of emergency” section of this manual.

Tire inflation pressure

Check the tire pressures (including the spare) often and always prior to long distance trips. The recommended tire pressure specifications are shown on the F.M.V.S.S./C.M.V.S.S. certification label or the Tire and Loading Information label under the “Cold Tire Pressure” heading. The Tire and Loading Information label is affixed to the driver side center pillar. Tire pressures should be checked regularly because:

- Most tires naturally lose air over time.
- Tires can lose air suddenly when driven over potholes or other objects or if the vehicle strikes a curb while parking.

The tire pressures should be checked when the tires are cold. The tires are considered COLD after the vehicle has been parked for 3 or more hours, or driven less than 1 mile (1.6 km) at moderate speeds.

TPMS with Tire Inflation Indicator provides visual and audible signals outside the vehicle for inflating the tires to the recommended COLD tire pressure. For additional information, refer to “TPMS with Tire Inflation Indicator” in the “Starting and driving” section of this manual.

Incorrect tire pressure, including under inflation, may adversely affect tire life and vehicle handling.

⚠ WARNING

- **Improperly inflated tires can fail suddenly and cause an accident.**
- **The Gross Vehicle Weight Rating (GVWR) is located on the F.M.V.S.S./C.M.V.S.S. certification label. The vehicle weight capacity is indicated on the Tire and Loading Information label. Do not load your vehicle beyond this capacity. Overloading your vehicle may result in reduced tire life, unsafe operating conditions due to premature tire failure, or unfavorable handling characteristics and could also lead to a serious accident. Loading beyond the specified capacity may also result in failure of other vehicle components.**
- **Before taking a long trip, or whenever you heavily load your vehicle, use a tire pressure gauge to ensure that the tire pressures are at the specified level.**
- **For additional information regarding tires, refer to “Important Tire Safety Information” (US) or “Tire Safety Information” (Canada) in the Warranty Information Booklet.**

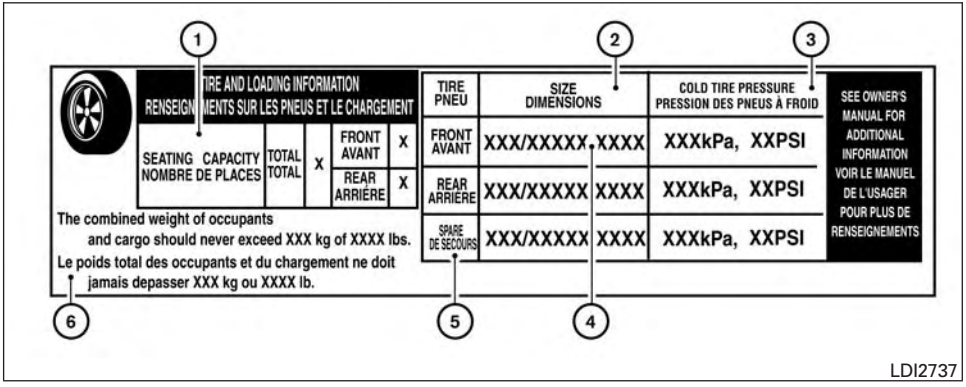

Tire and loading information label

① Seating capacity: The maximum number of occupants that can be seated in the vehicle.

② Original tire size: The size of the tires originally installed on the vehicle at the factory.

③ Cold tire pressure: Inflate the tires to this pressure when the tires are cold. Tires are considered COLD after the vehicle has been parked for 3 or more hours, or driven less than 1 mile (1.6 km) at moderate speeds. The recommended cold tire inflation is set by the manufacturer to provide the best balance of tire wear, vehicle handling, driveability, tire noise, etc., up to the vehicle's GVWR.

④ Tire size - refer to "Tire labeling" in this section.

⑤ Spare tire size.

⑥ Vehicle load limit: Refer to "Vehicle loading information" in the "Technical and consumer information" section of this manual.

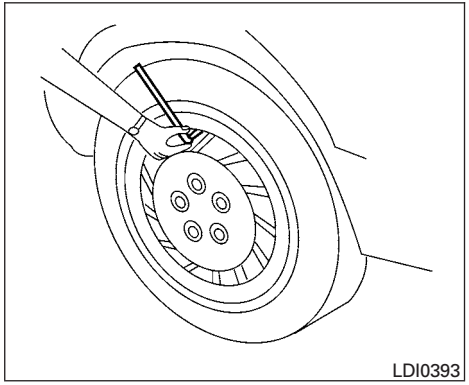

Checking tire pressure

1. Remove the valve stem cap from the tire.
2. Press the pressure gauge squarely onto the valve stem. Do not press too hard or force the valve stem sideways, or air will escape. If the hissing sound of air escaping from the tire is heard while checking the pressure, reposition the gauge to eliminate this leakage.
3. Remove the gauge.
4. Read the tire pressure on the gauge stem and compare to the specification shown on the Tire and Loading Information label.
5. Add air to the tire as needed. If too much air is added, press the core of the valve stem briefly with the tip of the gauge stem to release pressure. Recheck the pressure and add or release air as needed.
6. Install the valve stem cap.
7. Check the pressure of all other tires, including the spare.

Size	Cold Tire Inflation Pressure
Front and Rear Original Tire: 235/65R18	33 psi, 230 kPa
Front and Rear Original Tire: 235/55R20	35 psi, 240 kPa
Spare Tire: T165/90D18	60 psi, 420 kPa

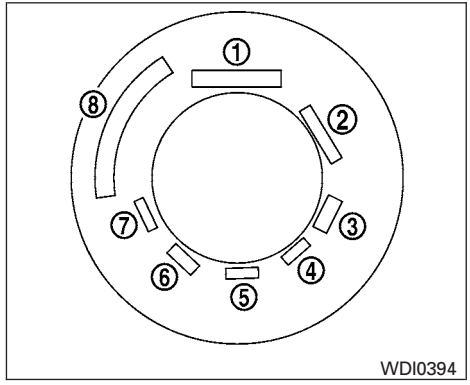

Example

TIRE LABELING

Federal law requires tire manufacturers to place standardized information on the sidewall of all tires. This information identifies and describes the fundamental characteristics of the tire and also provides the tire identification number (TIN) for safety standard certification. The TIN can be used to identify the tire in case of a recall.

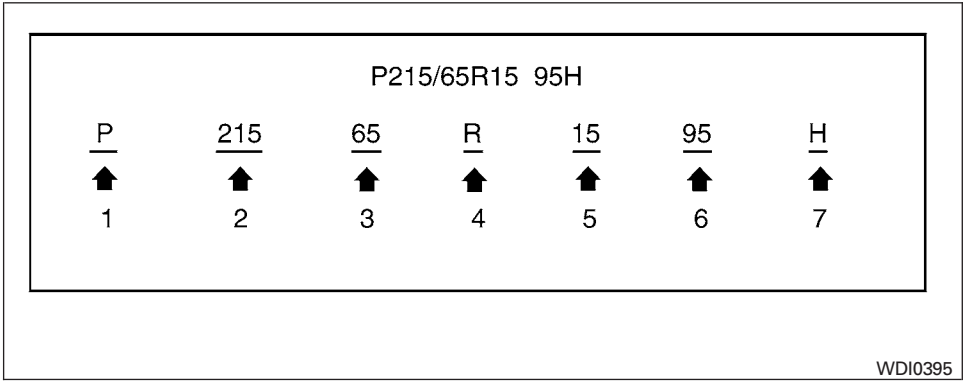

Example

① Tire size (example: P215/65R15 95H)

1. P: The “P” indicates the tire is designed for passenger vehicles (not all tires have this information).
2. Three-digit number (215): This number gives the width in millimeters of the tire from sidewall edge to sidewall edge.
3. Two-digit number (65): This number, known as the aspect ratio, gives the tire’s ratio of height to width.
4. R: The “R” stands for radial.
5. Two-digit number (15): This number is the wheel or rim diameter in inches.
6. Two- or three-digit number (95): This number is the tire’s load index. It is a measurement of how much weight each tire can support. You may not find this information on all tires because it is not required by law.
7. H: Tire speed rating. You should not drive the vehicle faster than the tire speed rating.

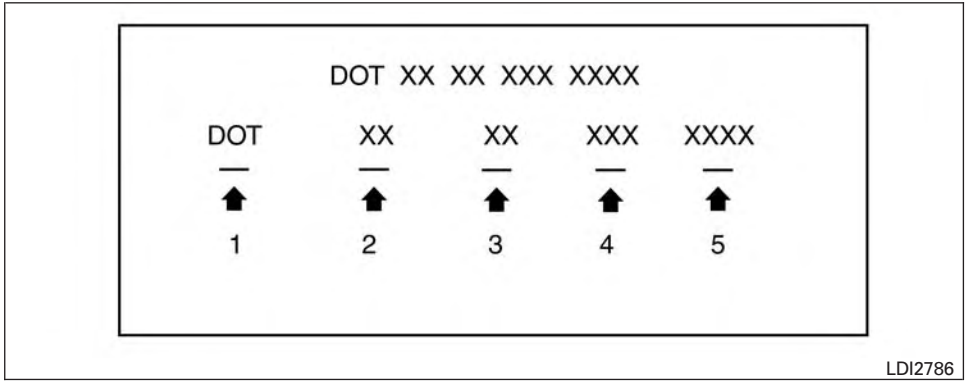

Example

② TIN (Tire Identification Number) for a new tire (example: DOT XX XX XXX XXXX)

1. DOT: Abbreviation for the “Department Of Transportation”. The symbol can be placed above, below or to the left or right of the Tire Identification Number.
2. Two-digit code: Manufacturer’s identification mark.
3. Two-digit code: Tire size.
4. Three-digit code: Tire type code (Optional).
5. Four numbers represent the week and year the tire was built. For example, the numbers 3103 means the 31st week of 2003. If these numbers are missing then look on the other sidewall of the tire.

③ Tire ply composition and material

The number of layers or plies of rubber-coated fabric in the tire. Tire manufacturers also must indicate the materials in the tire, which include steel, nylon, polyester and others.

④ Maximum permissible inflation pressure

This number is the greatest amount of air pressure that should be put in the tire. Do not exceed the maximum permissible inflation pressure.

⑤ Maximum load rating

This number indicates the maximum load in kilograms and pounds that can be carried by the tire. When replacing the tires on the vehicle, always use a tire that has the same load rating as the factory installed tire.

⑥ Term of “tubeless” or “tube type”

Indicates whether the tire requires an inner tube (“tube type”) or not (“tubeless”).

⑦ The word “radial”

The word “radial” is shown if the tire has radial structure.

⑧ Manufacturer or brand name

Manufacturer or brand name is shown.

Other Tire-related Terminology

In addition to the many terms that are defined throughout this section, Intended Outboard Sidewall is (1) the sidewall that contains a whitewall, bears white lettering or bears manufacturer, brand, and/or model name molding that is higher or deeper than the same molding on the other sidewall of the tire, or (2) the outward facing sidewall of an asymmetrical tire that has a particular side that must always face outward when mounted on a vehicle.

TYPES OF TIRES

WARNING

- **When changing or replacing tires, be sure all four tires are of the same type (i.e., Summer, All Season or Snow) and construction. An INFINITI retailer may be able to help you with information about tire type, size, speed rating and availability.**
- **Replacement tires may have a lower speed rating than the factory equipped tires, and may not match the potential maximum vehicle speed. Never exceed the maximum speed rating of the tire.**
- **Replacing tires with those not originally specified by INFINITI could affect the proper operation of the low tire pressure warning system.**
- **Always use tires of the same type, size, brand, construction and tread pattern on all four wheels. Failure to do so may result in a circumference difference between tires on the front and rear axles which can cause the Vehicle Dynamic Control (VDC) system to malfunction resulting in personal injury or death, excessive tire wear and may damage the transmission, transfer case and differential gears.**
- **For additional information regarding tires, refer to "Important Tire Safety Information" (US) or "Tire Safety Information" (Canada) in the Warranty Information Booklet.**

All-Wheel Drive (AWD) models

CAUTION

- **ONLY use spare tires specified for the AWD model.**

If excessive tire wear is found, it is recommended that all four tires be replaced with tires of the same size, brand, construction and tread pattern. The tire pressure and wheel alignment should also be checked and corrected as necessary. It is recommended that you visit an INFINITI retailer for this service.

All season tires

INFINITI specifies All Season tires on some models to provide good performance all year, including snowy and icy road conditions. All Season tires are identified by ALL SEASON and/or M&S on the tire sidewall. Snow tires have better snow traction than All Season tires and may be more appropriate in some areas.

Summer tires

INFINITI specifies summer tires on some models to provide superior performance on dry roads. Summer tire performance is substantially reduced in snow and ice. Summer tires do not have the tire traction rating "M&S" on the tire sidewall.

If you plan to operate your vehicle in snowy or icy conditions, INFINITI recommends the use of SNOW tires or ALL SEASON tires on all four wheels.

Snow tires

If snow tires are needed, it is necessary to select tires equivalent in size and load rating to the original equipment tires. If you do not, it can adversely affect the safety and handling of your vehicle.

Generally, snow tires have lower speed ratings than factory equipped tires and may not match the potential maximum vehicle speed. Never exceed the maximum speed rating of the tire.

If you install snow tires, they must be the same size, brand, construction and tread pattern on all four wheels.

For additional traction on icy roads, studded tires may be used. However, some U.S. states and Canadian provinces prohibit their use. Check local, state and provincial laws before installing studded tires. Skid and traction capabilities of studded snow tires on wet or dry surfaces may be poorer than that of non-studded snow tires.

TIRE CHAINS

⚠ CAUTION

Tire chains/cables should not be installed on 235/55R20 size tires. Installation of the tire chains/cables on 235/55R20 size tires will cause damage to the vehicle. If you plan to use tire chains/cables, you should install 235/65R18 size tires on your vehicle.

Use of tire chains may be prohibited according to location. Check the local laws before installing tire chains. When installing tire chains, make sure they are the proper size for the tires on your vehicle and are installed according to the chain manufacturer's suggestions. **Use only SAE class "S" chains.** Class "S" chains are used on vehicles with restricted tire to vehicle clearance. Vehicles that can use Class "S" chains are designed to meet the minimum clearances between the tire and the closest vehicle suspension or body component required to accommodate the use of a winter traction device (tire chains or cables). The minimum clearances are determined using the factory equipped tire size. Other types may damage your vehicle. Use chain tensioners when recommended by the tire chain manufacturer to ensure a tight fit. Loose end links of the tire chain must be secured or removed to prevent the possibility of whipping action damage to the fenders or underbody. If possible, avoid fully loading your vehicle when using tire chains. In addition, drive at a reduced speed. Otherwise, your vehicle may be damaged and/or vehicle handling and performance may be adversely affected.

Do not use tire chains on dry roads. Driving with chains in such conditions can cause damage to the various mechanisms of the vehicle due to some overstress.

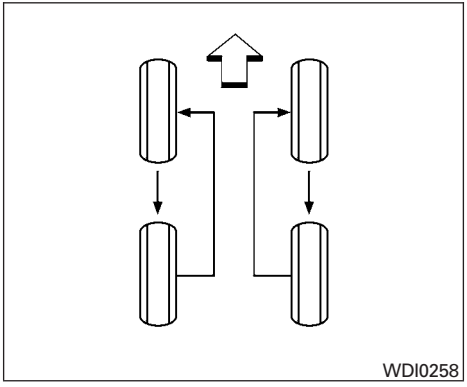

CHANGING WHEELS AND TIRES

Tire rotation

INFINITI recommends rotating the tires every 5,000 miles (8,000 km).

For additional information on tire replacing procedures, refer to “Flat tire” in the “In case of emergency” section of this manual.

As soon as possible, tighten the wheel nuts to the specified torque with a torque wrench.

Wheel nut tightening torque:
83 ft-lb (113 N·m)

The wheel nuts must be kept tightened to specifications at all times. It is recommended that wheel nuts be tightened to specification at each tire rotation interval.

⚠WARNING

- **After rotating the tires, check and adjust the tire pressure.**
- **Retighten the wheel nuts when the vehicle has been driven for 600 miles (1,000 km) (also in cases of a flat tire, etc.).**
- **Do not include the spare tire in the tire rotation.**
- **For additional information regarding tires, refer to “Important Tire Safety Information” (US) or “Tire Safety Information” (Canada) in the Warranty Information Booklet.**

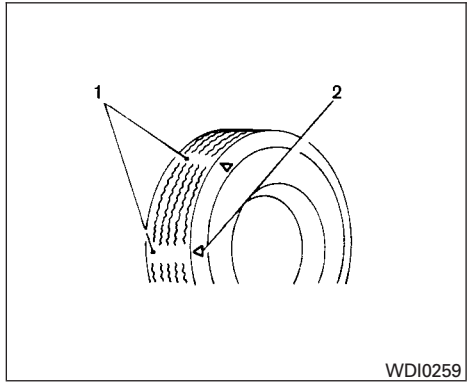

Tire wear and damage

1. Wear indicator
2. Location mark

⚠WARNING

- **Tires should be periodically inspected for wear, cracking, bulging or objects caught in the tread. If excessive wear, cracks, bulging or deep cuts are found, the tire(s) should be replaced.**

- **The original tires have built-in tread wear indicators. When the wear indicators are visible, the tire(s) should be replaced.**
- **Tires degrade with age and use. Have tires, including the spare, over 6 years old checked by a qualified technician because some tire damage may not be obvious. Replace the tires as necessary to prevent tire failure and possible personal injury.**
- **Improper service of the spare tire may result in serious personal injury. If it is necessary to repair the spare tire, it is recommended that you visit an INFINITI retailer for this service.**
- **For additional information regarding tires, refer to "Important Tire Safety Information" (US) or "Tire Safety Information" (Canada) in the Warranty Information Booklet.**

Replacing wheels and tires

When replacing a tire, use the same size, tread design, speed rating and load carrying capacity as originally equipped. For additional information, refer to "Wheels and tires" in the "Technical and consumer information" section of this manual.

⚠ WARNING

- **The use of tires other than those recommended or the mixed use of tires of different brands, construction (bias, bias-belted or radial), or tread patterns can adversely affect the ride, braking, handling, VDC system, ground clearance, body-to-tire clearance, tire chain clearance, speedometer calibration, headlight aim and bumper height. Some of these effects may lead to accidents and could result in serious personal injury.**
- **For 2WD models, if your vehicle was originally equipped with 4 tires that were the same size and you are only replacing 2 of the 4 tires, install the new tires on the rear axle. Placing new tires on the front axle may cause loss of vehicle control in some driving conditions and cause an accident and personal injury.**
- **If the wheels are changed for any reason, always replace with wheels which have the same off-set dimension. Wheels of a different off-set could cause premature tire wear, degrade vehicle handling characteristics, affect the VDC system and/or interference with the brake discs. Such interference can lead to decreased braking efficiency and/or early brake pad wear. For additional information on wheel off-set dimensions, refer to "Wheels and tires" in the "Technical and consumer information" section of this manual.**
- **Since the spare tire is not equipped with the TPMS, when a spare tire is mounted or a wheel is replaced, tire pressure will not be indicated, the TPMS will not function and the low tire pressure warning light will flash for approximately 1 minute. The light will remain on after 1 minute. Have your tires replaced and/or TPMS system reset as soon as possible. It is recommended that you visit an INFINITI retailer for this service.**
- **Replacing tires with those not originally specified by INFINITI could affect the proper operation of the TPMS.**

- **The TPMS sensor may be damaged if it is not handled correctly. Be careful when handling the TPMS sensor.**
- **When replacing the TPMS sensor, the ID registration may be required. It is recommended that you visit an INFINITI retailer for ID registration.**
- **Do not use a valve stem cap that is not specified by INFINITI. The valve stem cap may become stuck.**
- **Be sure that the valve stem caps are correctly fitted. Otherwise the valve may be clogged up with dirt and cause a malfunction or loss of pressure.**
- **Do not install a damaged or deformed wheel or tire even if it has been repaired. Such wheels or tires could have structural damage and could fail without warning.**
- **The use of retread tires is not recommended.**
- **For additional information regarding tires, refer to "Important Tire Safety Information" (US) or "Tire Safety Information" (Canada) in the Warranty Information Booklet.**

Wheel balance

Unbalanced wheels may affect vehicle handling and tire life. Even with regular use, wheels can get out of balance. Therefore, they should be balanced as required.

Wheel balance service should be performed with the wheels off the vehicle. Spin balancing the wheels on the vehicle could lead to mechanical damage.

- **For additional information regarding tires, refer to "Important Tire Safety Information" (US) or "Tire Safety Information" (Canada) in the Warranty Information Booklet.**

Care of wheels

- Wash the wheels when washing the vehicle to maintain their appearance.
- Clean the inner side of the wheels when the wheel is changed or the underside of the vehicle is washed.
- Do not use abrasive cleaners when washing the wheels.
- Inspect wheel rims regularly for dents or corrosion. Such damage may cause loss of pressure or poor seal at the tire bead.
- INFINITI recommends waxing the road wheels to protect against road salt in areas where it is used during winter.

Spare tire (TEMPORARY USE ONLY spare tire)

Since the spare tire is not equipped with the TPMS, when a spare tire is mounted (TEMPORARY USE ONLY or conventional), the TPMS will not function.

Observe the following precautions if the TEMPORARY USE ONLY spare tire must be used. Otherwise, your vehicle could be damaged or involved in an accident:

WARNING

- **The spare tire should be used for emergency use only. It should be replaced with the standard tire at the first opportunity to avoid possible tire or differential damage.**
- **Drive carefully while the TEMPORARY USE ONLY spare tire is installed. Avoid sharp turns and abrupt braking while driving.**

- **Periodically check spare tire inflation pressure. Always keep the pressure of the TEMPORARY USE ONLY spare tire at 420 kPa, 4.2 bar (60 psi).**
- **With the TEMPORARY USE ONLY spare tire installed do not drive the vehicle at speeds faster than 80 km/h (50 mph).**
- **When driving on roads covered with snow or ice, the TEMPORARY USE ONLY spare tire should be used on the rear wheels and the original tire used on the front wheels (drive wheels).**
- **Tire tread of the TEMPORARY USE ONLY spare tire will wear at a faster rate than the standard tire. Replace the spare tire as soon as the tread wear indicators appear.**
- **Do not use the spare tire on other vehicles.**
- **Do not use more than one spare tire at the same time.**
- **Do not tow a trailer when the TEMPORARY USE ONLY spare tire is installed.**

⚠ CAUTION

- **Do not use tire chains on a TEMPORARY USE ONLY spare tire. Tire chains will not fit properly and may cause damage to the vehicle.**
- **Because the TEMPORARY USE ONLY spare tire is smaller than the original tire, ground clearance is reduced. To avoid damage to the vehicle, do not drive over obstacles. Also, do not drive the vehicle through an automatic car wash since it may get caught.**

MEMO

9 Technical and consumer information

Recommended fluids/lubricants and capacities 9-2
Fuel recommendation 9-4
Engine oil and oil filter recommendations 9-6
Air conditioner system refrigerant and oil recommendations 9-7
Specifications 9-8
Engine 9-8
Wheels and tires 9-9
Dimensions and weights 9-9
When traveling or registering in another country. 9-10
Vehicle identification 9-10
Vehicle identification number (VIN) plate 9-10
Vehicle identification number (chassis number) 9-10
Engine serial number. 9-11
F.M.V.S.S./C.M.V.S.S. certification label 9-11
Emission control information label 9-11
Tire and loading information label. 9-12
Air conditioner specification label. 9-12
Installing front license plate 9-13
Vehicle loading information 9-14
Terms 9-14
Vehicle load capacity 9-15
Securing the load. 9-17
Loading tips 9-18
Measurement of weights 9-18
Towing a trailer 9-18
Maximum load limits 9-19
Towing load/specification. 9-22
Towing safety 9-22
Flat towing for front wheel drive vehicle (if so equipped) 9-29
Flat towing for All–Wheel drive vehicle (if so equipped) 9-29
Uniform tire quality grading 9-30
Emission control system warranty 9-31
Reporting safety defects 9-31
Readiness for inspection/maintenance (I/M) test 9-32
Event Data Recorders (EDR) (if so equipped). 9-33
Owner's Manual/Service Manual order information . . . 9-34

RECOMMENDED FLUIDS/ LUBRICANTS AND CAPACITIES

The following are approximate capacities. The actual refill capacities may be slightly different. When refilling, follow the procedure described in the "Maintenance and do-it-yourself" section to determine the proper refill capacity.

Fluid types			Capacity (Approximate)			Recommended Fluids and Lubricants
			US measure	Imp measure	Liter	
Fuel			19-1/2 gal	16-1/4 gal	74 L	▪ For additional information, refer to "Fuel recommendation" in this section.
Engine oil Drain and refill	VQ35DE	With oil filter change	5-1/8 qt	4-1/4 qt	4.8 L	▪ Genuine NISSAN engine oil or equivalent ▪ Viscosity SAE 0W-20 ▪ As an alternative to this recommended oil, SAE 5W-30 conventions petroleum oils may be used. ▪ For additional information, refer to "Engine oil and oil filter recommendations" in this section of the manual. ▪ For additional information, refer to "Engine oil" in the "Maintenance and do-it-yourself" section of this manual. ▪ For additional information, refer to "Engine oil" in the "Maintenance and do-it-yourself" section of this manual.
		Without oil filter change	4-3/4 qt	4 qt	4.5 L	
Engine coolant		With reservoir	2-1/2 gal	2-1/8 gal	9.6 L	▪ Pre-diluted Genuine NISSAN Long Life Antifreeze/Coolant (blue) or equivalent
Continuously Variable Transmission (CVT) fluid			—	—	—	▪ Genuine NISSAN CVT Fluid NS-3 ▪ INFINITI recommends using Genuine NISSAN CVT Fluid NS-3 ONLY in INFINITI CVTs. Do not mix with other fluids. Using fluids that are not equivalent to Genuine NISSAN CVT Fluid NS-3 may damage the CVT. Damage caused by the use of fluids other than as recommended is not covered under the INFINITI New Vehicle Limited Warranty.

Fluid types	Capacity (Approximate)			Recommended Fluids and Lubricants
	US measure	Imp measure	Liter	
Power steering fluid (PSF)	—	—	—	▪ Genuine NISSAN E-PSF or equivalent. ▪ Use of a power steering fluid other than Genuine NISSAN E-PSF may prevent the power steering system from operating properly.
Differential gear oil	—	—	—	▪ Genuine NISSAN Differential Oil Hypoid Super Semi-synthetic API GL-5, Viscosity SAE 75W-90 ▪ The use of differential gear oil other than the specified may cause vehicle malfunctions. Damage caused by use of oil other than as recommended is not covered by the Infiniti New Vehicle Limited Warranty.
Transfer oil	—	—	—	▪ Genuine NISSAN Differential Oil Hypoid Super GL-5 80W-90 or equivalent conventional (non-synthetic) oil
Brake fluid	—	—	—	▪ Genuine NISSAN Super Heavy Duty Brake Fluid or equivalent DOT 3 ▪ Available in mainland USA through an INFINITI retailer.
Multi-purpose grease	—	—	—	▪ NLGI No. 2 (Lithium Soap base)
Air conditioning system refrigerant	—	—	—	▪ HFC-134a (R-134a) ▪ For additional information, refer to “Air conditioner system refrigerant and oil recommendations” in this section of the manual.
Air conditioning system oil	—	—	—	▪ Genuine NISSAN A/C System Oil Type DH-PS or equivalent ▪ For additional information, refer to “Air conditioner system refrigerant and oil recommendations” in this section of the manual.
Windshield-washer fluid	1-3/8 gal	1-1/8 gal	5 L	▪ Genuine NISSAN Windshield Washer Concentrate Cleaner & Antifreeze fluid or equivalent

FUEL RECOMMENDATION

INFINITI recommends the use of unleaded premium gasoline with an octane rating of at least 91 AKI (Anti-Knock Index) number (Research octane number 96). If unleaded premium gasoline is not available, you may use unleaded regular gasoline with an octane rating of at least 87 AKI number (Research octane number 91), but you may notice a decrease in performance.

⚠ CAUTION

- **Using a fuel other than that specified could adversely affect the emission control system, and may also affect the warranty coverage.**
- **Under no circumstances should a leaded gasoline be used, because this will damage the three-way catalyst.**
- **Do not use E-15 or E-85 fuel in your vehicle. Your vehicle is not designed to run on E-15 E-85 fuel. Using E-15 or E-85 fuel in a vehicle not specifically designed for E-15 or E-85 fuel can adversely affect the emission control devices and systems of the vehicle. Damage caused by such fuel is not covered by the INFINITI New Vehicle Limited Warranty.**
- **Do not use fuel that contains the octane booster methylcyclopentadienyl manganese tricarbonyl (MMT). Using fuel containing MMT may adversely affect vehicle performance and vehicle emissions. Not all fuel dispensers are labeled to indicate MMT content, so you may have to consult your gasoline retailer for more details. Note that Federal and California laws prohibit the use of MMT in reformulated gasoline.**
- **U.S. government regulations require ethanol dispensing pumps to be identified by a small, square, orange and black label with the common abbreviation or the appropriate percentage for that region.**

Gasoline specifications

INFINITI recommends using gasoline that meets the World-Wide Fuel Charter (WWFC) specifications where it is available. Many of the automobile manufacturers developed this specification to improve emission control system and vehicle performance. Ask your service station manager if the gasoline meets the WWFC specifications.

Reformulated gasoline

Some fuel suppliers are now producing reformulated gasolines. These gasolines are specially designed to reduce vehicle emissions. INFINITI supports efforts towards cleaner air and suggests that you use reformulated gasoline when available.

Gasoline containing oxygenates

Some fuel suppliers sell gasoline containing oxygenates such as ethanol, MTBE and methanol with or without advertising their presence. INFINITI does not recommend the use of fuels of which the oxygenate content and the fuel compatibility for your INFINITI cannot be readily determined. If in doubt, ask your service station manager.

If you use oxygenate-blend gasoline, please take the following precautions as the usage of such fuels may cause vehicle performance problems and/or fuel system damage.

- **The fuel should be unleaded and have an octane rating no lower than that recommended for unleaded gasoline.**
- **If an oxygenate-blend other than methanol blend is used, it should contain no more than 10% oxygenate. (MTBE may, however, be added up to 15%.)**

- **E-15 fuel contains more than 10% oxygenate. E-15 fuel will adversely affect the emission control devices and systems of the vehicle and should not be used. Damage caused by such fuel is not covered by the INFINITI New Vehicle Limited Warranty.**
- **If a methanol blend is used, it should contain no more than 5% methanol (methyl alcohol, wood alcohol). It should also contain a suitable amount of appropriate cosolvents and corrosion inhibitors. If not properly formulated with appropriate cosolvents and corrosion inhibitors, such methanol blends may cause fuel system damage and/or vehicle performance problems. At this time, sufficient data is not available to ensure that all methanol blends are suitable for use in INFINITI vehicles.**

If any driveability problems such as engine stalling and difficult hot-starting are experienced after using oxygenate-blend fuels, immediately change to a non-oxygenate fuel or a fuel with a low blend of MTBE.

Take care not to spill gasoline during refueling. Gasoline containing oxygenates can cause paint damage.

E–15 fuel

E-15 fuel is a mixture of approximately 15% fuel ethanol and 85% unleaded gasoline. E-15 can only be used in vehicles designed to run on E-15 fuel. Do not use E-15 in your vehicle. U.S. government regulations require fuel ethanol dispensing pumps to be identified with small, square, orange and black label with the common abbreviation or the appropriate percentage for that region.

E–85 fuel

E-85 fuel is a mixture of approximately 85% fuel ethanol and 15% unleaded gasoline. E-85 can only be used in a Flexible Fuel Vehicle (FFV). Do not use E-85 in your vehicle. U.S. government regulations require fuel ethanol dispensing pumps to be identified by a small, square, orange and black label with the common abbreviation or the appropriate percentage for that region.

Fuel containing MMT

MMT, or methylcyclopentadienyl manganese tricarbonyl, is an octane boosting additive. INFINITI does not recommend the use of fuel containing MMT. Such fuel may adversely affect vehicle performance, including the emissions control system. Note that while some fuel pumps label MMT content, not all do, so you may have to consult your gasoline retailer for more details.

Aftermarket fuel additives

INFINITI does not recommend the use of any aftermarket fuel additives (for example, fuel injector cleaner, octane booster, intake valve deposit removers, etc.) which are sold commercially. Many of these additives intended for gum, varnish or deposit removal may contain active solvents or similar ingredients that can be harmful to the fuel system and engine.

Octane rating tips

Using unleaded gasoline with an octane rating lower than recommended can cause persistent, heavy “spark knock.” (“Spark knock” is a metallic rapping noise.) If severe, this can lead to engine damage. If you detect a persistent heavy spark knock even when using gasoline of the stated octane rating, or if you hear steady spark knock while holding a steady speed on level roads, it is recommended that you have an INFINITI retailer correct the condition. Failure to correct the condition is misuse of the vehicle, for which INFINITI is not responsible.

Incorrect ignition timing may result in spark knock, after-run and/or overheating, which may cause excessive fuel consumption or engine damage. If any of the above symptoms are encountered, have your vehicle checked. It is recommended that you visit an INFINITI retailer.

However, now and then you may notice light spark knock for a short time while accelerating or driving up hills. This is not a cause for concern, because you get the greatest fuel benefit when there is light spark knock for a short time under heavy engine load.

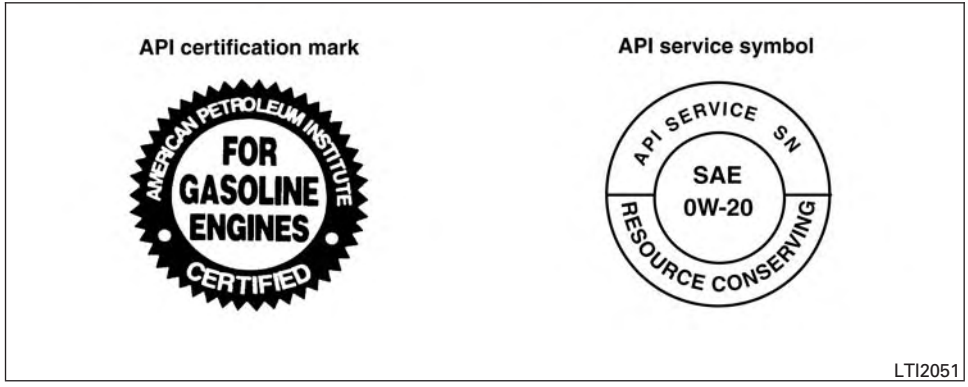

ENGINE OIL AND OIL FILTER RECOMMENDATIONS

Selecting the correct oil

It is essential to choose the correct grade, quality and viscosity engine oil to ensure satisfactory engine life and performance. For additional information, refer to "Recommended fluids/lubricants and capacities" in this section. INFINITI recommends the use of an energy conserving oil in order to improve fuel economy.

Select only engine oils that meet the American Petroleum Institute (API) certification or International Lubricant Standardization and Approval Committee (ILSAC) certification and SAE viscosity standard. These oils have the API certification mark on the front of the container. Oils which do not have the specified quality label should not be used as they could cause engine damage.

Oil additives

INFINITI does not recommend the use of oil additives. The use of an oil additive is not necessary when the proper oil type is used and maintenance intervals are followed.

Oil which may contain foreign matter or has been previously used should not be used.

Oil viscosity

The engine oil viscosity or thickness changes with temperature. Because of this, it is important to select the engine oil viscosity based on the temperatures at which the vehicle will be operated before the next oil change. Choosing an oil viscosity other than that recommended could cause serious engine damage.

Selecting the correct oil filter

Your new INFINITI vehicle is equipped with a high-quality Genuine NISSAN oil filter. When replacing, use a Genuine NISSAN oil filter or its equivalent for the reason described in “Change intervals”.

Change intervals

The oil and oil filter change intervals for your engine are based on the use of the specified quality oils and filters. Using engine oil and filters that are not of the specified quality, or exceeding recommended oil and filter change intervals could reduce engine life. Damage to the engine caused by improper maintenance or use of incorrect oil and filter quality and/or viscosity is not covered by the INFINITI New Vehicle Limited Warranty.

Your engine was filled with a high-quality engine oil when it was built. You do not have to change the oil before the first recommended change interval. Oil and filter change intervals depend upon how you use your vehicle.

Operation under the following conditions may require more frequent oil and filter changes:

- repeated short distance driving at cold outside temperatures
- driving in dusty conditions
- extensive idling
- towing a trailer
- stop and go commuting

Refer to the “INFINITI Service and Maintenance Guide” for the maintenance schedule.

AIR CONDITIONER SYSTEM REFRIGERANT AND OIL RECOMMENDATIONS

The air conditioner system in your INFINITI vehicle must be charged with the refrigerant HFC-134a (R-134a) and the oil, Genuine NISSAN A/C System Oil Type S (DH-PS) or the exact equivalents.

⚠ CAUTION

The use of any other refrigerant or oil will cause severe damage to the air conditioning system and will require the replacement of all air conditioner system components.

The refrigerant HFC-134a (R-134a) in your INFINITI vehicle does not harm the earth’s ozone layer. Although this refrigerant does not affect the earth’s atmosphere, certain government regulations require the recovery and recycling of any refrigerant during automotive air conditioner system service. An INFINITI retailer has the trained technicians and equipment needed to recover and recycle your air conditioner system refrigerant.

It is recommended that you visit an INFINITI retailer when servicing your air conditioner system.

SPECIFICATIONS

ENGINE

Model		VQ35DE
Type		Gasoline, 4-cycle, DOHC
Cylinder arrangement		6-cylinder, V-block, Slanted at 60°
Bore x Stroke	in (mm)	3.760 x 3.205 (95.5 x 81.4)
Displacement	cu in (cm^3)	213.45 (3,498)
Firing order		1–2–3–4–5–6
Idle speed		No adjustment is necessary.
CVT in N (Neutral) position		
Ignition timing (degree B.T.D.C. at idle speed)		
CO % at idle		
Spark plug		FXE22HR-11
Spark plug gap (Nominal)	in (mm)	0.043 (1.1)
Camshaft operation		Timing chain

This spark ignition system complies with the Canadian standard ICES-002.

WHEELS AND TIRES

Wheel type	Offset in (mm)	Size
Aluminum	1.97 (50)	18 x 7.5J
	1.97 (50)	20 x 7.5J
Spare Wheel - Steel		18 x4T
Tire size		235/65R18
		235/55R20
Spare tire		T165/90D18

DIMENSIONS AND WEIGHTS

Overall length	in (mm)	199.8 (5,075)
Overall width	in (mm)	77.2 (1,960)
Overall height		
without roof rack	in (mm)	68.6 (1,742)
with roof rack	in (mm)	71.4 (1,813)
Front and rear track	in (mm)	65.7 (1,670)
Wheelbase	in (mm)	114.2 (2,900)
Gross vehicle weight rating	lb (kg)	Refer to the “F.M.V.S.S./C.M.V.S.S. certification label” on the center pillar between the driver’s side front and rear doors.
Gross axle weight rating		
Front	lb (kg)	
Rear	lb (kg)	

WHEN TRAVELING OR REGISTERING IN ANOTHER COUNTRY

When planning to drive your INFINITI vehicle in another country, you should first find out if the fuel available is suitable for your vehicle's engine.

Using fuel with an octane rating that is too low may cause engine damage. All gasoline vehicles must be operated with unleaded gasoline. Therefore, avoid taking your vehicle to areas where appropriate fuel is not available.

When transferring the registration of your vehicle to another country, state, province or district, it may be necessary to modify the vehicle to meet local laws and regulations.

The laws and regulations for motor vehicle emission control and safety standards vary according to the country, state, province or district; therefore, vehicle specifications may differ.

When any vehicle is to be taken into another country, state, province or district and registered, its modifications, transportation, and registration are the responsibility of the user. INFINITI is not responsible for any inconvenience that may result.

VEHICLE IDENTIFICATION

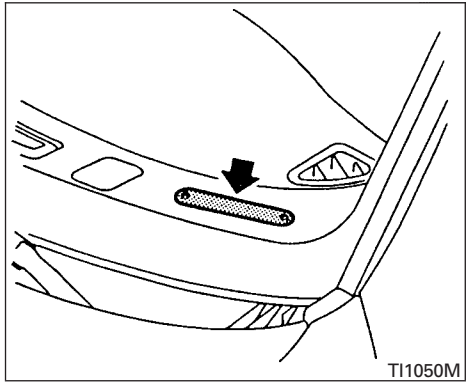

VEHICLE IDENTIFICATION NUMBER (VIN) PLATE

The VIN plate is located as shown. This number is the identification for your vehicle and is used in the vehicle registration.

The VIN number is also available through the center display screen. For additional information, refer to your "Navigation System Owner's Manual".

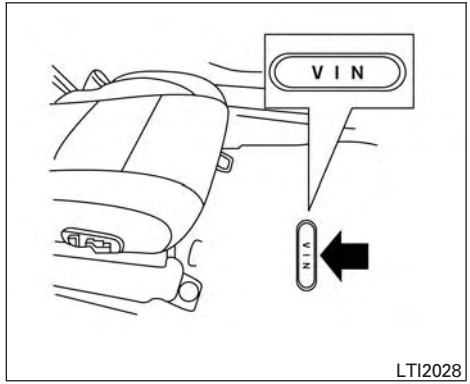

VEHICLE IDENTIFICATION NUMBER (chassis number)

The vehicle identification number is located as shown.

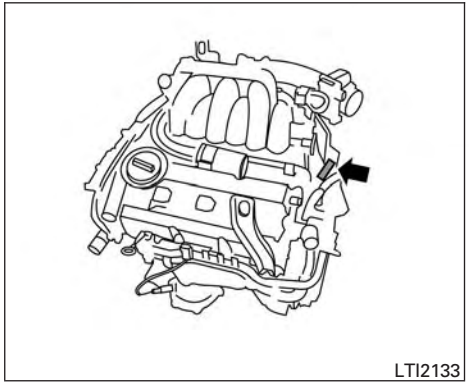

ENGINE SERIAL NUMBER

The number is stamped on the engine as shown.

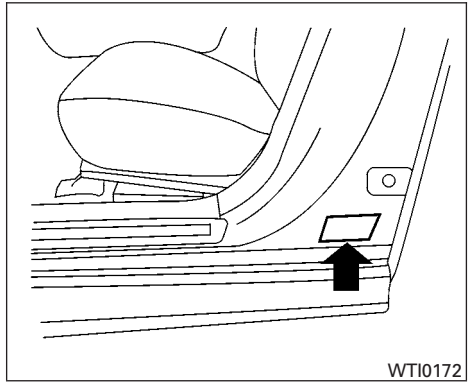

F.M.V.S.S./C.M.V.S.S. CERTIFICATION LABEL

The Federal/Canadian Motor Vehicle Safety Standard (F.M.V.S.S./C.M.V.S.S.) certification label is affixed as shown. This label contains valuable vehicle information, such as: (GVWR), (GAWR), month and year of manufacture, (VIN), etc. Review it carefully.

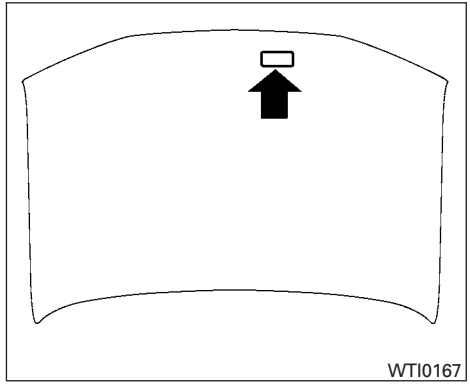

EMISSION CONTROL INFORMATION LABEL

The emission control information label is attached to the underside of the hood as shown.

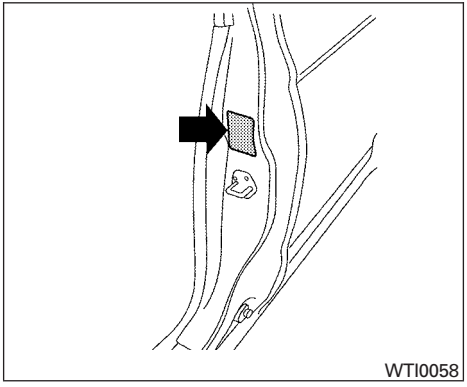

TIRE AND LOADING INFORMATION LABEL

The cold tire pressure is shown on the Tire and Loading Information Label. The label is located as shown.

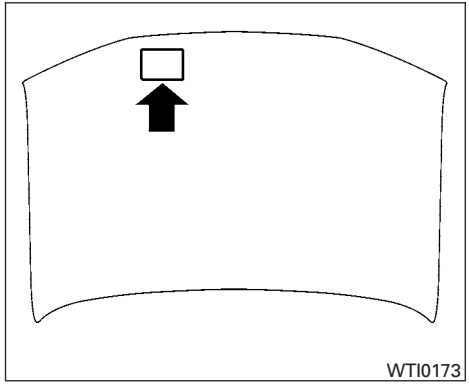

AIR CONDITIONER SPECIFICATION LABEL

The air conditioner specification label is affixed to the underside of the hood as shown.

INSTALLING FRONT LICENSE PLATE

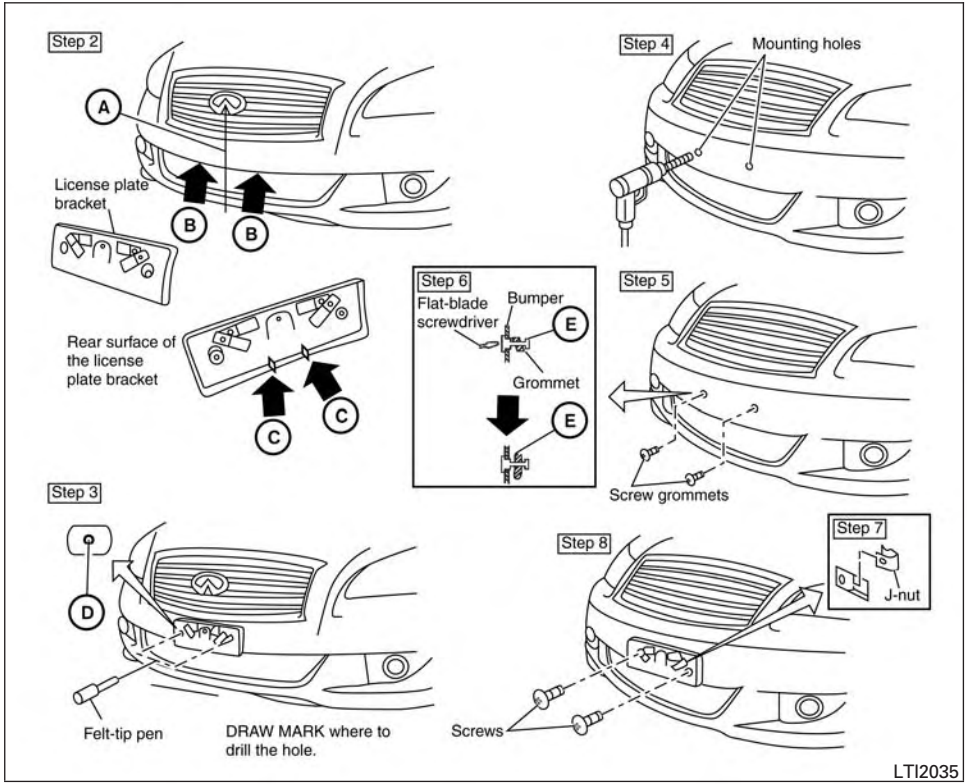

Use the following steps to mount the front license plate:

Before mounting the license plate, confirm that the following parts are enclosed in the plastic bag:

Only use the recommended mounting position, otherwise the Intelligent Cruise Control (ICC) (if so equipped) sensor obstruction may result.

- License plate bracket
- License plate bracket (J-nut) screws x 2
- License plate screws x 2
- Screw grommets x 2

1. Park the vehicle on flat, level ground.
2. Locate the center position Ⓐ as illustrated. Line up the license plate bracket under the top of the front bumper Ⓑ with the tabs Ⓒ. Hold the license plate bracket in place.
3. Mark the center of the hole Ⓓ with a felt-tip pen.
4. Carefully drill two pilot holes using a 0.39 in (10 mm) drill bit at the marked locations. **(Be sure that the drill only goes through the bumper fascia.)**
5. Insert the grommets into the holes in the bumper fascia.
6. Insert a small flat-bladed screwdriver into the grommet hole to turn the threaded part of the grommet 90° Ⓔ.

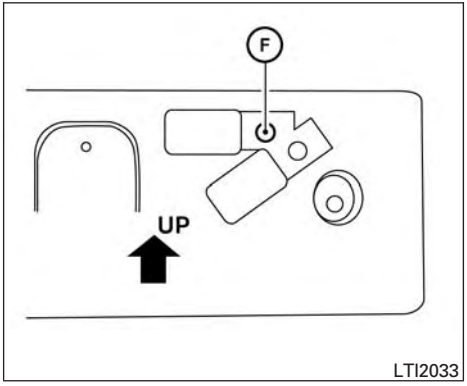

Mark the center of the hole Ⓕ on both sides with a felt-tip pen. Remove the bracket from the bumper, and then open 0.79 in (20 mm) diameter holes on the bumper using the marks Ⓕ as a center.

7. Insert a J-nut into the license plate bracket before placing the license plate bracket on the fascia.
8. Install the license plate bracket with screws.
9. Install the license plate with bolts that are no longer than 0.55 in (14 mm).

⚠WARNING

- **It is extremely dangerous to ride in a cargo area inside a vehicle. In a collision, people riding in these areas are more likely to be seriously injured or killed.**
- **Do not allow people to ride in any area of your vehicle that is not equipped with seats and seat belts.**
- **Be sure everyone in your vehicle is in a seat and using a seat belt properly.**

TERMS

It is important to familiarize yourself with the following terms before loading your vehicle:

- Curb Weight (actual weight of your vehicle) - vehicle weight including: standard and optional equipment, fluids, emergency tools, and spare tire assembly. This weight **does not** include passengers and cargo.
- GVW (Gross Vehicle Weight) - curb weight plus the combined weight of passengers and cargo.
- GVWR (Gross Vehicle Weight Rating) - maximum total combined weight of the unloaded vehicle, passengers, luggage, hitch, trailer tongue load and any other optional equipment. This information is located on the F.M.V.S.S./C.M.V.S.S. certification label.
- GAWR (Gross Axle Weight Rating) - maximum weight (load) limit specified for the front or rear axle. This information is located on the F.M.V.S.S./C.M.V.S.S. certification label.
- GCWR (Gross Combined Weight rating) - The maximum total weight rating of the vehicle, passengers, cargo, and trailer.

- Vehicle Capacity Weight, Load limit, Total load capacity - maximum total weight limit specified of the load (passengers and cargo) for the vehicle. This is the maximum combined weight of occupants and cargo that can be loaded into the vehicle. If the vehicle is used to tow a trailer, the trailer tongue weight must be included as part of the cargo load. This information is located on the Tire and Loading Information label.
- Cargo capacity - permissible weight of cargo, the subtracted weight of occupants from the load limit.

VEHICLE LOAD CAPACITY

Do not exceed the load limit of your vehicle shown as “The combined weight of occupants and cargo” on the Tire and Loading Information label. Do not exceed the number of occupants shown as “Seating Capacity” on the Tire and Loading Information label.

To get “the combined weight of occupants and cargo”, add the weight of all occupants, then add the total luggage weight. Examples are shown in the following illustration.

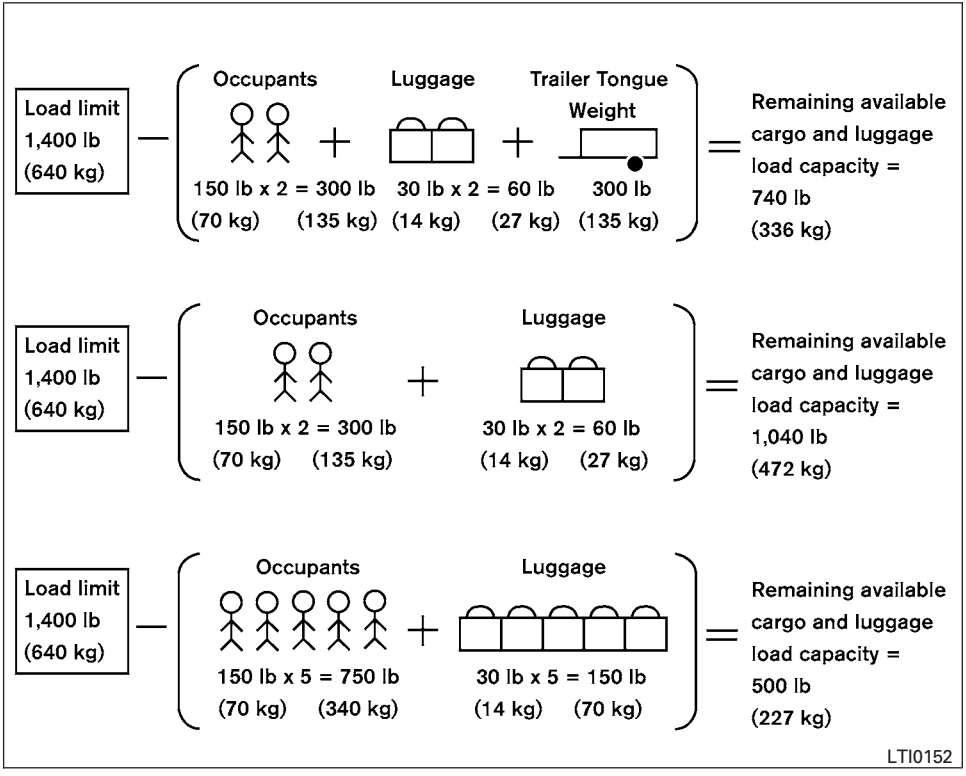

Example

Steps for determining correct load limit

1. Locate the statement “The combined weight of occupants and cargo should never exceed XXX lbs or XXX kg” on your vehicle’s placard.
2. Determine the combined weight of the driver and passengers that will be riding in your vehicle.
3. Subtract the combined weight of the driver and passengers from XXX lbs or XXX kg.
4. The resulting figure equals the available amount of cargo and luggage load capacity. For example, if the XXX amount equals 1,400 lbs. and there will be five 150 lb. passengers in your vehicle, the amount of available cargo and luggage load capacity is 650 lbs. (1,400-750 (5 X 150) = 650 lbs) or (640-340 (5 X 70) = 300 kg.)

5. Determine the combined weight of luggage and cargo being loaded on the vehicle. That weight may not safely exceed the available cargo and luggage load capacity calculated in step 4.
6. If your vehicle will be towing a trailer, load from your trailer will be transferred to your vehicle. Consult this manual to determine how this reduces the available cargo and luggage load capacity of your vehicle.

Before driving a loaded vehicle, confirm that you do not exceed the GVWR or the GAWR for your vehicle. For additional information, refer to “Measurement of weights” in this section.

Also check tires for proper inflation pressures. For additional information, refer to the “Tire and Loading Information label” in the Maintenance and do-it-yourself” section of this manual.

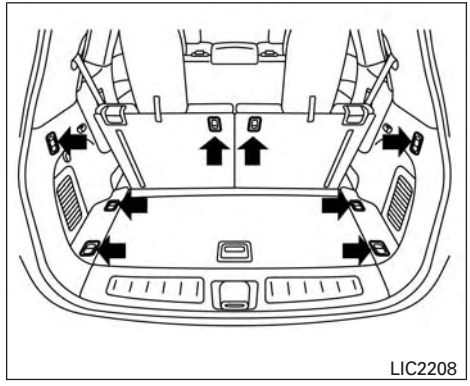

Cargo area luggage hooks

SECURING THE LOAD

There are luggage hooks located in the cargo area as shown. The hooks can be used to secure cargo with ropes or other types of straps.

Do not apply a total load of more than 6.5 lbs. (29 N) to a single metal floor hook when securing cargo.

WARNING

- **Properly secure all cargo with ropes or straps to help prevent it from sliding or shifting. Do not place cargo higher than the seatbacks. In a sudden stop or collision, unsecured cargo could cause personal injury.**
- **The child restraint top tether strap may be damaged by contact with items in the cargo area. Secure any items in the cargo area. Your child could be seriously injured or killed in a collision if the top tether strap is damaged.**
- **Do not load your vehicle any heavier than the GVWR or the maximum front and rear GAWRs. If you do, parts of your vehicle can break, tire damage could occur, or it can change the way your vehicle handles. This could result in loss of control and cause personal injury.**

LOADING TIPS

- The GVW must not exceed GVWR or GAWR as specified on the F.M.V.S.S./C.M.V.S.S. certification label.
- Do not load the front and rear axle to the GAWR. Doing so will exceed the GVWR.

⚠ WARNING

- **Properly secure all cargo with ropes or straps to help prevent it from sliding or shifting. Do not place cargo higher than the seatbacks. In a sudden stop or collision, unsecured cargo could cause personal injury.**
- **Do not load your vehicle any heavier than the GVWR or the maximum front and rear GAWRs. If you do, parts of your vehicle can break, tire damage could occur, or it can change the way your vehicle handles. This could result in loss of control and cause personal injury.**
- **Overloading not only can shorten the life of your vehicle and the tire, but can also cause unsafe vehicle handling and longer braking distances. This may cause a premature tire failure which could result in a serious accident and personal injury. Failures caused by overloading are not covered by the vehicle's warranty.**

MEASUREMENT OF WEIGHTS

Secure loose items to prevent weight shifts that could affect the balance of your vehicle. When the vehicle is loaded, drive to a scale and weigh the front and the rear wheels separately to determine axle loads. Individual axle loads should not exceed either of the gross axle weight ratings (GAWR). The total of the axle loads should not exceed the gross vehicle weight rating (GVWR). These ratings are given on the vehicle certification label. If weight ratings are exceeded, move or remove items to bring all weights below the ratings.

⚠ WARNING

Overloading or improper loading of a trailer and its cargo can adversely affect vehicle handling, braking and performance and may lead to accidents.

⚠ CAUTION

- **Do not tow a trailer or haul a heavy load for the first 500 miles (805 km). Your engine, axle or other parts could be damaged.**
- **For the first 500 miles (805 km) that you tow a trailer, do not drive over 50 mph (80 km/h) and do not make starts at full throttle. This helps the engine and other parts of your vehicle wear in at the heavier loads.**

Your new vehicle was designed to be used primarily to carry passengers and cargo. Remember that towing a trailer places additional loads on your vehicle's engine, drive train, steering, braking and other systems.

An INFINITI Towing Guide (U.S. only) is available on the website at *www.InfinitiUSA.com.* This guide includes information on trailer towing capability and the special equipment required for proper towing.

MAXIMUM LOAD LIMITS

Maximum trailer loads

Never allow the total trailer load to exceed the value specified in the following Towing Load/Specification Chart found in this section. The total trailer load equals trailer weight plus its cargo weight.

- **When towing a trailer load of 3,500 lbs. (1,587 kg) or more, trailers with a brake system MUST be used.**

The maximum Gross Combined Weight Rating (GCWR) should not exceed the value specified in the following Towing Load/Specification Chart.

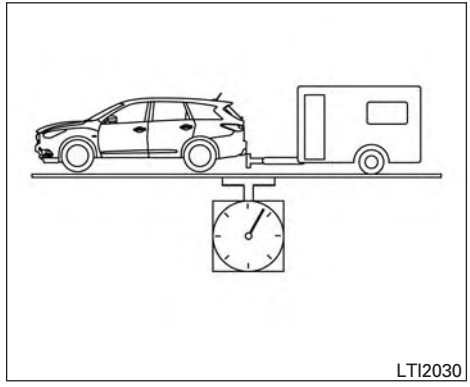

The GCWR equals the combined weight of the towing vehicle (including passengers and cargo) plus the total trailer load. Towing loads greater than these or using improper towing equipment could adversely affect vehicle handling, braking and performance.

The ability of your vehicle to tow a trailer is not only related to the maximum trailer loads, but also the places you plan to tow. Tow weights appropriate for level highway driving may have to be reduced for low traction situations (for example, on slippery boat ramps).

Temperature conditions can also affect towing. For example, towing a heavy trailer in high outside temperatures on graded roads can affect engine performance and cause overheating. The engine protection mode, which helps reduce the chance of engine damage, could activate and automatically decrease engine power. Vehicle speed may decrease under high load. Plan your trip carefully to account for trailer and vehicle load, weather and road conditions.

⚠ WARNING

Overheating can result in reduced engine power and vehicle speed. The reduced speed may be lower than other traffic, which could increase the chance of a collision. Be especially careful when driving. If the vehicle cannot maintain a safe driving speed, pull to the side of the road in a safe area. Allow the engine to cool and return to normal operation. For additional information, refer to “If your vehicle overheats” in the “In case of emergency” section of this manual.

⚠ CAUTION

Vehicle damage resulting from improper towing procedures is not covered by INFINITI warranties.

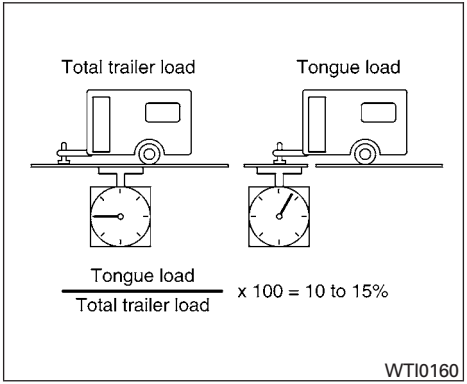

Tongue load

When using a weight carrying or a weight distributing hitch, keep the tongue load between 10 - 15% of the total trailer load or use the trailer tongue load specified by the trailer manufacturer. The tongue load must be within the maximum tongue load limits shown in the following “Towing Load/Specification” chart. If the tongue load becomes excessive, rearrange cargo to allow for proper tongue load.

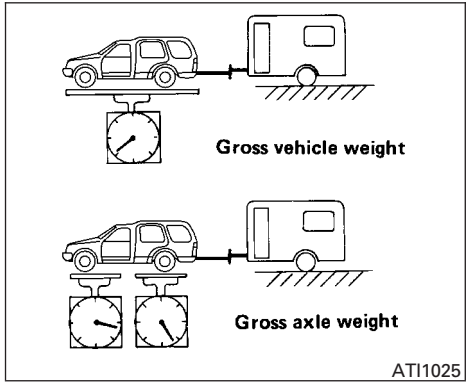

Maximum Gross Vehicle Weight (GVW)/Maximum Gross Axle Weight (GAW)

The GVW of the towing vehicle must not exceed the Gross Vehicle Weight Rating (GVWR) shown on the F.M.V.S.S./C.M.V.S.S. certification label. The GVW equals the combined weight of the unloaded vehicle, passengers, luggage, hitch, trailer tongue load and any other optional equipment. In addition, front or rear GAW must not exceed the Gross Axle Weight Rating (GAWR) shown on the F.M.V.S.S./C.M.V.S.S. certification label.

Towing capacities are calculated assuming a base vehicle with driver and any options required to achieve the rating. Additional passengers, cargo and/or optional equipment, such as the trailer hitch, will add weight to the vehicle and reduce your vehicle’s maximum towing capacity and trailer tongue load.

The vehicle and trailer need to be weighed to confirm the vehicle is within the GVWR, Front GAWR, Rear GAWR, Gross Combined Weight Rating (GCWR) and Towing capacity.

All vehicle and trailer weights can be measured using platform type scales commonly found at truck stops, highway weigh stations, building supply centers or salvage yards.

To determine the available payload capacity for tongue/king pin load, use the following procedure.

1. Locate the GVWR on the F.M.V.S.S./C.M.V.S.S. certification label.
2. Weigh your vehicle on the scale with all of the passengers and cargo that are normally in the vehicle when towing a trailer.
3. Subtract the actual vehicle weight from the GVWR. The remaining amount is the available maximum tongue/king pin load.

To determine the available towing capacity, use the following procedure.

1. Find the GCWR for your vehicle on the "Towing Load/Specification" chart found in this section.
2. Subtract the actual vehicle weight from the GCWR. The remaining amount is the available maximum towing capacity.

To determine the Gross Trailer Weight, weigh your trailer on a scale with all equipment and cargo, that are normally in the trailer when it is towed. Make sure the Gross trailer weight is not more than the Gross Trailer Weight Rating shown on the trailer and is not more than the calculated available maximum towing capacity.

Also weigh the front and rear axles on the scale to make sure the Front Gross Axle Weight and Rear Gross Axle Weight are not more than Front Gross Axle Weight and Rear Gross Axle Weight on the F.M.V.S.S./C.M.V.S.S. certification label. The cargo in the trailer and vehicle may need to be moved or removed to meet the specified ratings.

Example:

- Gross Vehicle Weight (GVW) as weighed on a scale - including passengers, cargo and hitch - 6,350 lb. (2,880 kg).
- Gross Vehicle Weight Rating (GVWR) from F.M.V.S.S./C.M.V.S.S. certification label - 7,250 lb. (3,289 kg).
- Gross Combined Weight Rating (GCWR) from "Towing Load/Specification" chart - 15,100 lb. (6,849 kg).
- Maximum Trailer towing capacity from "Towing Load/Specification" chart - 9,100 lb. (4,128 kg).

7,250 lb. (3,289 kg)	GVWR
– 6,350 lb. (2,880 kg)	GVW
= 900 lb. (409 kg)	Available for tongue weight
15,100 lb. (6,849 kg)	GCWR
– 6,350 lb. (2,880 kg)	GVW
= 9,123 lb. (4,138 kg)	Capacity available for towing
900 lb. (409 kg)	Available tongue weight
/ 8,750 lb. (3,969 kg)	Available capacity
=	10% tongue weight

The available towing capacity may be less than the maximum towing capacity due to the passenger and cargo load in the vehicle.

Remember to keep trailer tongue weight between 10 - 15% of the trailer weight or within the trailer tongue load specification recommended by the trailer manufacturer. If the tongue load becomes excessive, rearrange the cargo to obtain the proper tongue load. Do not exceed the maximum tongue weight specification shown in the "Towing load/specification" chart even if the calculated available tongue weight is greater than 15%. If the calculated tongue weight is less than 10%, reduce the total trailer weight to match the available tongue weight.

Always verify that available capacities are within the required ratings.

TOWING LOAD/SPECIFICATION

TOWING LOAD/SPECIFICATION CHART	
	U.S. and Canada
Maximum Towing Capacity*1	5,000 lb. (2,268 kg)
Maximum Tongue Load	500 lb. (227 kg)
Maximum Gross Combined Weight Rating	10,000 lb. (4,536 kg)
*1: The towing capacity values are calculated assuming a base vehicle with driver and any options required to achieve the rating. Additional passengers, cargo and/or optional equipment will add weight to the vehicle and reduce your vehicle's maximum towing capacity.	

TOWING SAFETY

Trailer hitch

Your vehicle may be equipped with an optional trailer tow package. The trailer tow package includes a receiver-type frame mounted hitch. This hitch is rated for the maximum towing capacity of this vehicle when the proper towing equipment is used. Choose a proper ball mount and hitch ball that is rated for the trailer to be towed. Genuine INFINITI ball mounts and hitch balls are available from an INFINITI retailer.

If your vehicle is not equipped with the optional trailer tow package, check the towing capacity of your bumper hitch or receiver-type frame mounted hitch. Choose a proper hitch for your vehicle and trailer. A Genuine INFINITI trailer hitch is available from an INFINITI retailer. Make sure the trailer hitch is securely attached to the vehicle to help avoid personal injury or property damage due to sway caused by crosswinds, rough road surfaces or passing trucks.

⚠ WARNING

Trailer hitch components have specific weight ratings. Your vehicle may be capable of towing a trailer heavier than the weight rating of the hitch components. Never exceed the weight rating of the hitch components. Doing so can cause serious personal injury or property damage.

Hitch ball

Choose a hitch ball of the proper size and weight rating for your trailer:

- The required hitch ball size is stamped on most trailer couplers. Most hitch balls also have the size printed on the top of the ball.
- Choose the proper class hitch ball based on the trailer weight.
- The diameter of the threaded shank of the hitch ball must be matched to the ball mount hole diameter. The hitch ball shank should be no more than 1/16" smaller than the hole in the ball mount.
- The threaded shank of the hitch ball must be long enough to be properly secured to the ball mount. There should be at least 2 threads showing beyond the lock washer and nut.

Ball mount

The hitch ball is attached to the ball mount and the ball mount is inserted into the hitch receiver. Choose a proper class ball mount based on the trailer weight. Additionally, the ball mount should be chosen to keep the trailer tongue level with the ground.

Weight carrying hitches

A weight carrying or "dead weight" ball mount is one that is designed to carry the whole amount of tongue weight and gross weight directly on the ball mount and on the receiver.

Weight distribution hitch

This type of hitch is also called a "load-leveling" or "equalizing" hitch. A set of bars attach to the ball mount and to the trailer to distribute the tongue weight (hitch weight) of your trailer. Many vehicles can't carry the full tongue weight of a given trailer, and need some of the tongue weight transferred through the frame and pushing down on the front wheels. This gives stability to the tow vehicle.

A weight-distributing hitch system (Class IV) is recommended if you plan to tow trailers with a maximum weight over 5,000 lbs (2,268 kg). Check with the trailer and towing equipment manufacturers to determine if they recommend the use of a weight-distributing hitch system.

NOTE:

A weight-distributing hitch system may affect the operation of trailer surge brakes. If you are considering use of a weight-distributing hitch system with a surge brake-equipped trailer, check with the surge brake, hitch or trailer manufacturer to determine if and how this can be done.

Follow the instructions provided by the manufacturer for installing and using the weight-distributing hitch system.

General set-up instructions are as follows:

1. Park unloaded vehicle on a level surface. With the ignition on and the doors closed, allow the vehicle to stand for several minutes so that it can level.
2. Measure the height of a reference point on the front and rear bumpers at the center of the vehicle.
3. Attach the trailer to the vehicle and adjust the hitch equalizers so that the front bumper height is within 0 - .5 inches (0 – 13 mm) of the reference height measured in step 2. The rear bumper should be no higher than the reference height measured in step 2.

⚠ WARNING

Properly adjust the weight distributing hitch so the rear of the bumper is no higher than the measured reference height when the trailer is attached. If the rear bumper is higher than the measured reference height when loaded, the vehicle may handle unpredictably which could cause a loss of vehicle control and cause serious personal injury or property damage.

Sway control device

Sudden maneuvers, wind gusts, and buffeting caused by other vehicles can affect trailer handling. Sway control devices may be used to help control these affects. If you choose to use one, contact a reputable trailer hitch supplier to make sure the sway control device will work with the vehicle, hitch, trailer and the trailer's brake system. Follow the instructions provided by the manufacturer for installing and using the sway control device.

Class I hitch

Class I trailer hitch equipment (receiver, ball mount and hitch ball) can be used to tow trailers of a maximum weight of 2,000 lb (907 kg).

Class II hitch

Class II trailer hitch equipment (receiver, ball mount and hitch ball) can be used to tow trailers of a maximum weight of 3,500 lb (1,587 kg).

Tire pressures

- When towing a trailer, inflate the vehicle tires to the recommended cold tire pressure indicated on the Tire and Loading Information label.
- Trailer tire condition, size, load rating and proper inflation pressure should be in accordance with the trailer and tire manufacturer's specifications.

Safety chains

Always use suitable safety chains between your vehicle and the trailer. The safety chains should be crossed and should be attached to the hitch, not to the vehicle bumper or axle. The safety chains can be attached to the bumper if the hitch ball is mounted to the bumper. Be sure to leave enough slack in the chains to permit turning corners.

Trailer lights

⚠ CAUTION

When splicing into the vehicle electrical system, a commercially available power-type module/converter must be used to provide power for all trailer lighting. This unit uses the vehicle battery as a direct power source for all trailer lights while using the vehicle tail light, stoplight and turn signal circuits as a signal source. The module/converter must draw no more that 15 milliamps from the stop and tail lamp circuits. Using a module/converter that exceeds these power requirements may damage the vehicle's electrical system. See a reputable trailer retailer to obtain the proper equipment and to have it installed.

Trailer lights should comply with federal and/or local regulations. For assistance in hooking up trailer lights, contact an INFINITI retailer or reputable trailer retailer. Vehicles equipped with the optional trailer tow package are equipped with a 7-pin trailer harness connector. If your trailer is equipped with a flat 4-pin connector, an adapter will be needed to connect the trailer lights to the vehicle. Adapters are available at auto parts stores and hitch retailers.

Trailer brakes

When towing a trailer load of 3,500 lbs. (1,587 kg) or more, trailers with a brake system MUST be used. However, most states require a separate braking system on trailers with a loaded weight above a specific amount. Make sure the trailer meets the local regulations and the regulations where you plan to tow.

Several types of braking systems are available.

Surge Brakes - The surge brake actuator is mounted on the trailer tongue with a hydraulic line running to each trailer wheel. Surge brakes are activated by the trailer pushing against the hitch ball when the tow vehicle is braking. Hydraulic surge brakes are common on rental trailers and some boat trailers. In this type of system, there is no hydraulic or electric connection for brake operation between the tow vehicle and the trailer.

Electric Trailer Brakes - Electric braking systems are activated by an electronic signal sent from a trailer brake controller (special brake-sensing module). For additional information, refer to “Electric trailer brake controller” in this section.

Have a professional supplier of towing equipment make sure the trailer brakes are properly installed and demonstrate proper brake function testing.

⚠ WARNING

Never connect a trailer brake system directly to the vehicle brake system.

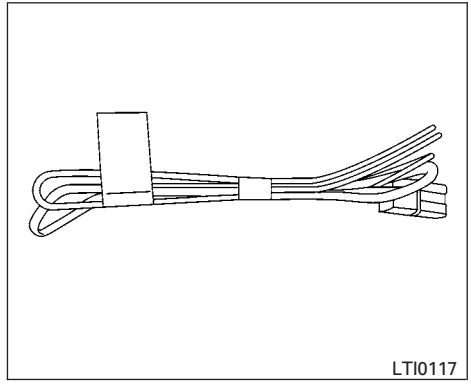

Jumper Harness

Electric trailer brake controller

Trailers equipped with electric brakes may require the installation of an aftermarket trailer brake controller.

Your vehicle is equipped with a connector and jumper harness that is specifically designed to be used when installing an aftermarket brake controller.

To install the electric trailer brake controller jumper harness, perform the following procedure:

1. Open the driver door. Move the seat to the rearmost position.

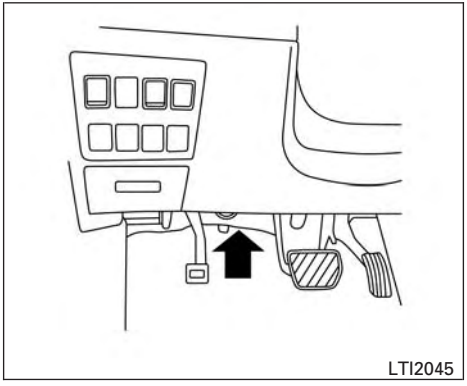

Connector Location

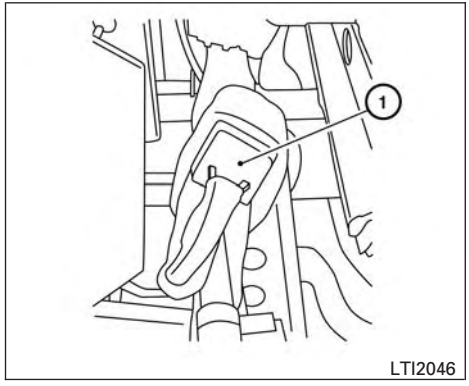

Connector

2. Locate the jumper harness connector under the lower portion of the instrument panel. The connector is taped to the wiring harness ① as indicated.

- The connector is marked with a white tag with “elec brake conn”.

Wire color designation for electric trailer brake controller jumper harness.

WIRE COLOR	NOTE
RED/GREEN	Vehicle stop lamp switch to trailer brake controller.
BLACK	Brake controller ground (-).
BROWN/WHITE	Trailer brake controller switched output.
RED/BLUE	Not used
RED	Fused trailer brake controller battery feed (B+).

3. Peel off the tape and connect the jumper harness to the connector.
4. Release the parking brake.
5. Install the aftermarket electric trailer brake controller according to the manufacturer’s instructions.

Pre-towing tips

- Be certain your vehicle maintains a level position when a loaded and/or unloaded trailer is hitched. Do not drive the vehicle if it has an abnormal nose-up or nose-down condition; check for improper tongue load, overload, worn suspension or other possible causes of either condition.

- Always secure items in the trailer to prevent load shift while driving.
- Keep the cargo load as low as possible in the trailer to keep the trailer center of gravity low.
- Load the trailer so approximately 60% of the trailer load is in the front half and 40% is in the back half. Also make sure the load is balanced side to side.
- Check your hitch, trailer tire pressure, vehicle tire pressure, trailer light operation, and trailer wheel lug nuts every time you attach a trailer to the vehicle.
- Be certain your rearview mirrors conform to all federal, state or local regulations. If not, install any mirrors required for towing before driving the vehicle.
- Determine the overall height of the vehicle and trailer so the required clearance is known.

Trailer towing tips

In order to gain skill and an understanding of the vehicle's behavior, you should practice turning, stopping and backing up in an area which is free from traffic. Steering stability and braking performance will be somewhat different than under normal driving conditions.

- Always secure items in the trailer to prevent load shift while driving.
- Lock the trailer hitch coupler with a pin or lock to prevent the coupler from inadvertently becoming unlatched.
- Avoid abrupt starts, acceleration or stops.
- Avoid sharp turns or lane changes.
- Always drive your vehicle at a moderate speed.
- When backing up, hold the bottom of the steering wheel with one hand. Move your hand in the direction in which you want the trailer to go. Make small corrections and back up slowly. If possible, have someone guide you when you are backing up.

Always block the wheels on both vehicle and trailer when parking. Parking on a slope is not recommended; however, if you must do so:

⚠ CAUTION

If you move the shift selector to the P (Park) position before blocking the wheels and applying the parking brake, transmission damage could occur.

1. Apply and hold the brake pedal.
2. Have someone place blocks on the downhill side of the vehicle and trailer wheels.
3. After the wheel blocks are in place, slowly release the brake pedal until the blocks absorb the vehicle load.
4. Apply the parking brake.
5. Shift the transmission into P (Park).
6. Turn off the engine.

To drive away:

1. Start the vehicle.
2. Apply and hold the brake pedal.
3. Shift the transmission into gear.
4. Release the parking brake.
5. Drive slowly until the vehicle and trailer are clear from the blocks.
6. Apply and hold the brake pedal.
7. Have someone retrieve and store the blocks.

- While going downhill, the weight of the trailer pushing on the tow vehicle may decrease overall stability. Therefore, to maintain adequate control, reduce your speed and shift to a lower gear. Avoid long or repeated use of the brakes when descending a hill, as this reduces their effectiveness and could cause overheating. Shifting to a lower gear instead provides “engine braking” and reduces the need to brake as frequently.
- If the engine coolant temperature rises to a high temperature, refer to “If your vehicle overheats” in the “In case of emergency” section of this owner’s manual.
- Trailer towing requires more fuel than normal circumstances.
- Avoid towing a trailer for your vehicle’s first 500 miles (805 km).
- For the first 500 miles (805 km) that you do tow, do not drive over 50 mph (80 km/h).
- Have your vehicle serviced more often than at intervals specified in the recommended Maintenance Schedule in the “INFINITI Service and Maintenance Guide”.
- When making a turn, your trailer wheels will be closer to the inside of the turn than your vehicle wheels. To compensate for this, make a larger than normal turning radius during the turn.
- Crosswinds and rough roads will adversely affect vehicle/trailer handling, possibly causing vehicle sway. When being passed by larger vehicles, be prepared for possible changes in crosswinds that could affect vehicle handling.

Do the following if the trailer begins to sway:

1. Take your foot off the accelerator pedal to allow the vehicle to coast and steer as straight ahead as the road conditions allow. This combination will help stabilize the vehicle
   - Do not correct trailer sway by steering or applying the brakes.
2. When the trailer sway stops, gently apply the brakes and pull to the side of the road in a safe area.
3. Try to rearrange the trailer load so it is balanced as described in this section.

- Be careful when passing other vehicles. Passing while towing a trailer requires considerably more distance than normal passing. Remember, the length of the trailer must also pass the other vehicle before you can safely change lanes.
- Downshift the transmission to a lower gear for engine braking when driving down steep or long hills. This will help slow the vehicle without applying the brakes.
- Avoid holding the brake pedal down too long or too frequently. This could cause the brakes to overheat, resulting in reduced braking efficiency.
- Increase your following distance to allow for greater stopping distances while towing a trailer. Anticipate stops and brake gradually.
- INFINITI recommends that the cruise control not be used while towing a trailer.
- Some states or provinces have specific regulations and speed limits for vehicles that are towing trailers. Obey the local speed limits.
- Check your hitch, trailer wiring harness connections, and trailer wheel lug nuts after 50 miles (80 km) of travel and at every break.

- When launching a boat, don't allow the water level to go over the exhaust tail pipe or rear bumper.
- Make sure you disconnect the trailer lights before backing the trailer into the water or the trailer lights may burn out.

When towing a trailer, final drive gear oil should be replaced and transmission oil/fluid should be changed more frequently. For additional information, refer to the "Maintenance and do-it-yourself" section in this manual.

FLAT TOWING FOR FRONT WHEEL DRIVE VEHICLE (if so equipped)

Towing your vehicle with all four wheels on the ground is sometimes called flat towing. This method is sometimes used when towing a vehicle behind a recreational vehicle, such as a motor home.

⚠ CAUTION

- **Failure to follow these guidelines can result in severe transmission damage.**
- **Whenever flat towing your vehicle, always tow forward, never backward.**
- **Never tow your front wheel drive vehicle with the front tires on the ground. Doing so may cause serious and expensive damage to the powertrain.**
- **DO NOT tow your front wheel drive continuously variable transmission vehicle with all four wheels on the ground (flat towing). Doing so WILL DAMAGE internal transmission parts due to lack of transmission lubrication.**
- **For emergency towing procedures refer to "Towing recommended by INFINITI" in the "In case of emergency" section of this manual.**

FLAT TOWING FOR ALL–WHEEL DRIVE VEHICLE (if so equipped)

Towing your vehicle with all four wheels on the ground is sometimes called flat towing. This method is sometimes used when towing a vehicle behind a recreational vehicle, such as a motor home.

⚠ CAUTION

- **Failure to follow these guidelines can result in severe transmission damage.**
- **Never flat tow your All-wheel drive (AWD) vehicle.**
- **DO NOT tow your All-wheel drive (AWD) vehicle with any wheels on the ground. Doing so may cause serious and expensive damage to the powertrain.**
- **For emergency towing procedures refer to "Towing recommended by INFINITI" in the "In case of emergency" section of this manual.**

Continuously Variable Transmission

To tow a vehicle equipped with a continuously variable transmission, an appropriate vehicle dolly **MUST** be placed under the towed vehicle's drive wheels. **Always** follow the dolly manufacturer's recommendations when using their product.

DOT (Department of Transportation) Quality Grades: All passenger car tires must conform to federal safety requirements in addition to these grades.

Quality grades can be found where applicable on the tire sidewall between tread shoulder and maximum section width. For example:

Treadwear 200 Traction AA Temperature A

Treadwear

The treadwear grade is a comparative rating based on the wear rate of the tire when tested under controlled conditions on a specified government test course. For example, a tire graded 150 would wear one and one-half (1 1/2) times as well on the government course as a tire graded 100. The relative performance of tires depends upon the actual conditions of their use, however, and may depart significantly from the norm due to variations in driving habits, service practices and differences in road characteristics and climate.

Traction AA, A, B and C

The traction grades, from highest to lowest, are AA, A, B, and C. Those grades represent the tire's ability to stop on wet pavement as measured under controlled conditions on specified government test surfaces of asphalt and concrete. A tire marked C may have poor traction performance.

⚠ WARNING

The traction grade assigned to this tire is based on straight-ahead braking traction tests, and does not include acceleration, cornering, hydroplaning, or peak traction characteristics.

Temperature A, B and C

The temperature grades are A (the highest), B, and C, representing the tire's resistance to the generation of heat, and its ability to dissipate heat when tested under controlled conditions on a specified indoor laboratory test wheel. Sustained high temperature can cause the material of the tire to degenerate and reduce tire life, and excessive temperature can lead to sudden tire failure. The grade C corresponds to a level of performance which all passenger car tires must meet under the Federal Motor Safety Standard No. 109. Grades B and A represent higher levels of performance on the laboratory test wheel than the minimum required by law.

⚠ WARNING

The temperature grade for this tire is established for a tire that is properly inflated and not overloaded. Excessive speed, under-inflation, or excessive loading, either separately or in combination, can cause heat build-up and possible tire failure.

EMISSION CONTROL SYSTEM WARRANTY

Your INFINITI is covered by the following emission warranties:

For USA

1. Emission Defects Warranty
2. Emissions Performance Warranty

Details of these warranties may be found with other vehicle warranties in your Warranty Information Booklet which comes with your INFINITI. If you did not receive a Warranty Information Booklet, or it is lost, you may obtain a replacement by writing to:

- INFINITI Division
  Nissan North America, Inc.
  Consumer Affairs Department
  P.O. Box 685003
  Franklin, TN 37068-5003

For Canada

Emission Control System Warranty

Details of these warranties may be found with other vehicle warranties in your Warranty Information Booklet which comes with your INFINITI. If you did not receive a Warranty Information Booklet, or it is lost, you may obtain a replacement by writing to:

- Nissan Canada Inc.
  5290 Orbitor Drive
  Mississauga, Ontario, L4W 4Z5

REPORTING SAFETY DEFECTS

For USA

If you believe that your vehicle has a defect which could cause a crash or could cause injury or death, you should immediately inform the National Highway Traffic Safety Administration (NHTSA) in addition to notifying INFINITI.

If NHTSA receives similar complaints, it may open an investigation, and if it finds that a safety defect exists in a group of vehicles, it may order a recall and remedy campaign. However, NHTSA cannot become involved in individual problems between you, your retailer, or INFINITI.

To contact NHTSA, you may call the Vehicle Safety Hotline toll-free at 1-888-327-4236 (TTY: 1-800-424-9153); go to http://www.safercar.gov; or write to: Administrator, NHTSA, 400 Seventh Street, SW., Washington, D.C. 20590. You can also obtain other information about motor vehicle safety from http://www.safercar.gov.

You may notify INFINITI by contacting our Consumer Affairs Department, toll-free, at 1-800-662-6200.

For Canada

If you believe that your vehicle has a defect which could cause a crash or could cause injury or death, you should immediately inform Transport Canada in addition to notifying INFINITI.

If Transport Canada receives complaints, it may open an investigation, and if it finds that a safety defect exists in a group of vehicles, it may request that INFINITI conduct a recall campaign. However, Transport Canada cannot become involved in individual problems between you, your retailer, or INFINITI.

You may contact Transport Canada's Defect Investigations and Recalls Division toll free at 1-800-333-0510. You may also report safety defects online at: https://wwwapps.tc.gc.ca/Saf-Sec-Sur/7/PCDB-BDPP/fc-cp.aspx?lang=eng (English speakers) or https://wwwapps.tc.gc.ca/Saf-Sec-Sur/7/PCDB-BDPP/fc-cp.aspx?lang=fra (French speakers)

Additional information concerning motor vehicle safety may be obtained from Transport Canada's Road Safety Information Centre at 1-800-333-0371 or online at www.tc.gc.ca/roadsafety (English speakers) or www.tc.gc.ca/securiteroutiere (French speakers).

To notify INFINITI of any safety concerns please contact our Consumer Information Centre toll free at 1-800-387-0122.

READINESS FOR INSPECTION/ MAINTENANCE (I/M) TEST

⚠ WARNING

A vehicle equipped with All-Wheel Drive (AWD) should never be tested using a two wheel dynamometer (such as the dynamometers used by some states for emissions testing), or similar equipment. Make sure you inform the test facility personnel that your vehicle is equipped with AWD before it is placed on a dynamometer. Using the wrong test equipment may result in transmission damage or unexpected vehicle movement which could result in serious vehicle damage or personal injury.

Due to legal requirements in some states and Canadian Provinces, your vehicle may be required to be in what is called the "ready condition" for an Inspection/Maintenance (I/M) test of the emission control system.

The vehicle is set to the "ready condition" when it is driven through certain driving patterns. Usually, the ready condition can be obtained by ordinary usage of the vehicle.

If a powertrain system component is repaired or the battery is disconnected, the vehicle may be reset to a “not ready” condition. Before taking the I/M test, check the vehicle’s inspection/maintenance test readiness condition. Place the ignition switch in the ON position without starting the engine. If the Malfunction Indicator Light (MIL) comes on steady for 20 seconds and then blinks for 10 seconds , the I/M test condition is “not ready”. If the MIL does not blink after 20 seconds, the I/M test condition is “ready”. It is recommended that you visit an INFINITI retailer to set the “ready condition” or to prepare the vehicle for testing.

EVENT DATA RECORDERS (EDR) (if so equipped)

This vehicle is equipped with an EDR. The main purpose of an EDR is to record, in certain collision or near collision-like situations, such as an air bag deployment or hitting a road obstacle, data that will assist in understanding how a vehicle’s systems performed. The EDR is designed to record data related to vehicle dynamics and safety systems for a short period of time, typically 30 seconds or less. The EDR in this vehicle is designed to record such data as:

- How various systems in your vehicle were operating;
- Whether or not the driver and passenger safety belts were buckled/fastened;
- How far (if at all) the driver was depressing the accelerator and/or brake pedal; and,
- How fast the vehicle was traveling.
- Sounds are not recorded.

These data can help provide a better understanding of the circumstances in which collisions and injuries occur. NOTE: EDR data are recorded by your vehicle only if a nontrivial collision situation occurs; no data are recorded by the EDR under normal driving conditions and no personal data (e.g. name, gender, age and collision location) are recorded. However, other parties, such as law enforcement, could combine the EDR data with the type of personally identifying data routinely acquired during a collision investigation.

To read data recorded by an EDR, special equipment is required and access to the vehicle or the EDR is needed. In addition to the vehicle manufacturer and INFINITI retailer, other parties, such as law enforcement, that have the special equipment, can read the information if they have access to the vehicle or the EDR. EDR data will only be accessed with the consent of the vehicle owner or lessee or as otherwise required or permitted by law.

OWNER'S MANUAL/SERVICE MANUAL ORDER INFORMATION

Genuine INFINITI Service Manuals for this model year and prior can be purchased. A Genuine INFINITI Service Manual is the best source of service and repair information for your vehicle. This manual is the same one used by the factory-trained technicians working at INFINITI retailers. Genuine INFINITI Owner's Manuals can also be purchased.

For USA

For current pricing and availability of Genuine **INFINITI Service Manuals**, contact:

www.infiniti-techinfo.com

For current pricing and availability of Genuine **INFINITI Owner's Manuals**, contact:

1-800-247-5321

For Canada

To purchase a copy of a Genuine INFINITI Service Manual or Owner's Manual, for this model year and prior, please contact your nearest INFINITI retailer. For the phone number and location of an INFINITI retailer in your area call the INFINITI Satisfaction Center at 1-800-361-4792 and a bilingual INFINITI representative will assist you.

10 Index

2nd row bench seat adjustment 1-5, 1-7

A

Aiming control, headlights 2-39
Air bag (See supplemental restraint system) 1-49
Air bag system
Front (See supplemental front impact air bag system) 1-56
Air bag warning labels 1-67
Air bag warning light. 1-67, 2-12
Air bag warning light, supplemental . .1-67, 2-12
Air Cleaner 8-18
Air cleaner housing filter 8-18
Air conditioner
Air conditioner specification label 9-12
Air conditioner system refrigerant and oil recommendations 9-7
Heater and air conditioner (automatic) (if so equipped) 4-48
Heater and air conditioner controls 4-49
Servicing air conditioner 4-56
Alarm system
(See vehicle security system) 2-30
Anchor point locations 1-32
Antenna 4-100
Anti-lock brake warning light 2-9
Anti-lock Braking System (ABS) 5-135
Armrests 1-8
Around View® Monitor. 4-30
Audible reminders 2-15
Audio system 4-56
AM radio reception 4-57
Bluetooth® audio. 4-95
Bluetooth® streaming audio 4-95
Compact disc (CD) player 4-76
Digital Versatile Disc (DVD) Player Operation 4-80
FM/AM/SAT radio with compact disc (CD) player 4-72
FM radio reception 4-56
iPod® Player 4-88, 4-90
iPod® player operation 4-88, 4-90
Radio 4-56
Steering wheel audio control switch . . .4-99
Autolight switch. 2-37
Automatic
Automatic drive positioner 3-34
Automatic power window switch 2-60
Automatic anti-glare inside mirror 3-32
Automatic door locks 3-6
Automatic drive positioner 3-34

B

Backup Collision Intervention (BCI) system .5-58
Backup Collision Warning (BCW) system . .5-58
Battery 5-144, 8-15
Charge warning light. 2-9
Battery replacement 8-24
INFINITI Intelligent Key 8-24
Key fob 8-24
Before starting the engine 5-16
Belt (See drive belt) 8-17
Blind Spot Intervention (BSI) system 5-46
Blind Spot Warning (BSW) warning system 5-37
Block heater
Engine 5-145
Bluetooth® audio. 4-95
Bluetooth® hands-free phone system 4-113, 4-127
Booster seats 1-46
Brake
Anti-lock Braking System (ABS) 5-135
Brake fluid. 8-14
Brake light (See stop light). 8-26
Brake system 5-134
Brake warning light. 2-9
Brake wear indicators 2-15, 8-21
Parking brake operation 5-22
Self-adjusting brakes 8-21
Brake fluid. 8-14
Brakes 8-21
Brake system 5-134
Break-in schedule 5-128
Brightness/contrast button 4-10, 4-20
Brightness control
Instrument panel 2-40
Bulb check/instrument panel 2-8
Bulb replacement 8-26

C

Capacities and recommended fuel/lubricants . .9-2
Cargo area storage bin 2-57
Cargo (See vehicle loading information) 9-14
Car phone or CB radio. 4-113
CD care and cleaning 4-98
CD player (See audio system) 4-76
Check tire pressure 2-28
Child restraints 1-25, 1-25, 1-27, 1-29
LATCH (Lower Anchors and Tethers for CHildren) System 1-29
Precautions on child restraints. 1-27, 1-34, 1-40, 1-46
Top tether strap anchor point locations . .1-32
Child restraint with top tether strap. 1-31
Child safety rear door lock 3-6
Chimes, audible reminders 2-15
Cleaning exterior and interior 7-2, 7-4
Climate control seat switch 2-44
Clock setting
(models with Navigation System). 4-18
Clock setting
(models without Navigation System). 4-9
C.M.V.S.S. certification label 9-11
Cold weather driving 5-144
Compact disc (CD) player 4-76
Console box 2-52
Console light 2-65
Continuously Variable Transmission (CVT). . .5-18
Continuously Variable Transmission (CVT) fluid 8-13
Driving with Continuously Variable Transmission (CVT) 5-18
Control panel buttons 4-11
Brightness/contrast button. 4-10, 4-20
Enter button. 4-4, 4-11
Without navigation system 4-4
Controls
Audio controls (steering wheel). 4-99
Heater and air conditioner controls. 4-49
Coolant
Capacities and recommended fuel/lubricants 9-2
Changing engine coolant 8-9
Checking engine coolant level 8-9
Engine coolant temperature gauge 2-6
Corrosion protection 7-6
Cruise control 5-74, 5-75
Cup holders 2-54

D

Daytime running light system (Canada only). .2-39
Defroster switch
Rear window and outside mirror defroster switch. 2-36
Digital Versatile Disc (DVD) player 4-80
Dimensions and weights 9-9
Dimmer switch for instrument panel 2-40
Display 2-16
Display controls
(see control panel buttons) 4-4, 4-11
Distance Control Assist (DCA) system. 5-95
Doors. 3-4
Drive belt 8-17
Drive positioner, Automatic 3-34
Driving
Cold weather driving 5-144
Driving with Continuously Variable Transmission (CVT) 5-18
Precautions when starting and driving 5-4
Driving the vehicle 5-18
Dual head restraint DVD system 4-101
Dual power moonroof. 2-62, 2-62

E

Economy - fuel 5-130
Emergency engine shutoff 5-15, 6-3
Emission control information label 9-11
Emission control system warranty 9-31
Engine
Before starting the engine. 5-16
Block heater 5-145
Capacities and recommended fuel/lubricants 9-2
Changing engine coolant 8-9
Changing engine oil 8-11
Changing engine oil filter 8-12
Checking engine coolant level 8-9
Checking engine oil level 8-10
Engine compartment check locations 8-7
Engine coolant temperature gauge 2-6
Engine cooling system 8-8
Engine oil. 8-10
Engine oil and oil filter recommendation . . .9-6
Engine oil viscosity 9-7
Engine serial number 9-11
Engine specifications 9-8
Starting the engine 5-17
Engine coolant temperature gauge 2-6
Enter button. 4-4, 4-11
Event Data recorders 9-33

Exhaust gas (Carbon monoxide) 5-4
Explanation of maintenance items 8-2
Extended storage switch 2-50

F

Flashers (See hazard warning flasher switch). .6-2
Flat tire 6-3
Floor mat positioning aid 7-5
Fluid
Brake fluid 8-14
Capacities and recommended fuel/lubricants 9-2
Continuously Variable Transmission (CVT) fluid 8-13
Engine coolant. 8-8
Engine oil. 8-10
Power steering fluid 8-13
Windshield-washer fluid. 8-14
F.M.V.S.S. certification label. 9-11
Fog light switch 2-41
Forward Emergency Braking (FEB). 2-10
Front air bag system
(See supplemental restraint system) 1-56
Front power seat adjustment 1-3
Front seats. 1-2
Fuel
Capacities and recommended fuel/lubricants 9-2
Fuel economy. 5-130
Fuel-filler door and cap 3-27
Fuel gauge. 2-7
Fuel octane rating 9-5
Fuel recommendation 9-4
Loose fuel cap warning 2-30
Fuel Cell Vehicle (FCV) System
Tire pressure 8-28
Fuel-filler door 3-27
Fuel gauge. 2-7
Fuses 8-22
Fusible links 8-22

G

Garage door opener, HomeLink® Universal Transceiver 2-67, 2-69, 2-70
Gas cap 3-27
Gauge
Engine coolant temperature gauge 2-6
Fuel gauge. 2-7
Odometer 2-5
Speedometer 2-5
Tachometer 2-6
Trip odometer 2-5
General maintenance 8-2
Glove box. 2-52
Glove box lock 2-52

H

Hands-free phone system, Bluetooth®. 4-113, 4-127
Hazard warning flasher switch 6-2
Headlight aiming control 2-39
Headlight and turn signal switch 2-36
Headlight control switch 2-37
Headlights 8-26
Headlights, aiming control. 2-39
Head restraints. 1-11
Heated rear seats 2-43
Heated seats. 2-42
Heated steering wheel 2-45
Heater
Heater and air conditioner (automatic) (if so equipped) 4-48
Heater and air conditioner controls. 4-49
Heater operation. 4-49
Heater and air conditioner (automatic) 4-48
Hill start assist system 5-139
HomeLink® Universal Transceiver 2-67, 2-69, 2-70
Hood 3-21
Hook
Luggage hook 2-56
Horn 2-41

I

Ignition Switch
Push-Button Ignition Switch 5-13
Image viewer 4-21
Immobilizer system. 5-16
Important vehicle information label 9-11
In-cabin microfilter 8-19
Increasing fuel economy 5-130
Indicator lights and audible reminders
(See warning/indicator lights and audible reminders) 2-8, 2-9, 2-13
INFINITI Drive mode selector 5-23
INFINITI Intelligent Key System 3-2, 3-7
INFINITI vehicle immobilizer system 2-31, 3-4, 5-16
INFINITI voice recognition system. 4-139
Information display. 2-16

Inside automatic anti-glare mirror 3-32
Instrument brightness control 2-40
Instrument panel 0-6, 2-2
Instrument panel dimmer switch 2-40
Intelligent cruise control (ICC) system
Brake assist 5-76
Intelligent Key system
Key operating range 3-8
Key operation 3-10
Mechanical key 3-3
Remote keyless entry operation 3-13
Troubleshooting guide 3-17
Warning signals 3-17
Interior light 2-65
iPod® Player 4-88, 4-90
ISOFIX child restraints 1-29

J

Jump starting 6-10, 8-17

K

Key 3-2
Key fob battery replacement 8-24
Keyless entry
With Intelligent Key system
(See Intelligent Key system) 3-13

L

Labels
Air conditioner specification label 9-12
C.M.V.S.S. certification label 9-11
Emission control information label 9-11
Engine serial number 9-11
F.M.V.S.S. certification label 9-11
Tire and Loading Information label 9-12
Vehicle identification number (VIN) 9-10
Vehicle identification number (VIN) plate . .9-10
Warning labels (for SRS) 1-67
Lane Departure Prevention (LDP)
system 5-26, 5-31, 5-34
Lane Departure Warning (LDW)
system 5-26, 5-31, 5-34
LATCH (Lower Anchors and Tethers for CHildren)
System 1-29
License plate
Installing the license plate 9-13
Liftgate 3-22
Liftgate release 3-26
Light
Air bag warning light 1-67, 2-12
Brake light (See stop light) 8-26
Bulb check/instrument panel 2-8
Bulb replacement 8-26
Charge warning light 2-9
Console light 2-65
Exterior and Interior lights 8-26
Fog lights 8-26
Fog light switch 2-41
Headlight and turn signal switch 2-36
Headlight control switch 2-37
Headlights 8-26
Interior light 2-65
Light bulbs 8-26
Low tire pressure warning light 2-10
Low windshield-washer fluid warning
light 2-27
Passenger air bag and status light 1-58
Personal lights 2-66
Security indicator light 2-14
Warning/indicator lights and audible
reminders 2-8, 2-9, 2-13
Lights 8-26
Map lights 2-66
Lock
Child safety rear door lock 3-6
Glove box lock 2-52
Liftgate release 3-26
Power door locks 3-5, 3-6
Loose fuel cap warning 2-30
Low fuel warning light 2-11, 2-27
Low tire pressure warning light 2-10
Low windshield-washer fluid warning light . . .2-27
Luggage hook 2-56
Luggage rack (see roof rack) 2-57
Luggage (See vehicle loading information) . .9-14

M

Maintenance
General maintenance 8-2
Inside the vehicle 8-3
Maintenance precautions 8-5
Outside the vehicle 8-2
Seat belt maintenance 1-24
Under the hood and vehicle 8-4
Maintenance requirements 8-2
Malfunction indicator light 2-13
Map lights 2-66
Map pocket 2-51
Memory Seat 3-34
Meters and gauges 2-4

Instrument brightness control 2-40
Mirror
Automatic anti-glare inside mirror. 3-32
Outside mirrors 3-32
Vanity mirror 3-31
Mirrors 3-32
Moonroof. 7-4
Moving Object Detection (MOD). 4-43

O

Octane rating (See fuel octane rating). 9-5
Odometer 2-5
Oil
Capacities and recommended fuel/lubricants 9-2
Changing engine oil 8-11
Changing engine oil filter 8-12
Checking engine oil level 8-10
Engine oil. 8-10
Engine oil and oil filter recommendation . . .9-6
Engine oil viscosity 9-7
One shot call. 4-117, 4-129
Outside mirrors 3-32
Overheat
If your vehicle overheats. 6-12
Owner's manual order form 9-34
Owner's manual/service manual order information 9-34

P

Parking
Parking brake operation 5-22
Parking/parking on hills 5-134
Parking brake. 5-22
Personal lights 2-66
Phone, Bluetooth® hands-free system 4-113, 4-127
Power
Power door locks 3-5, 3-6
Power outlet. 2-48, 2-49
Power rear windows. 2-60
Power steering fluid 8-13
Power steering system. 5-134
Power windows 2-58
Rear power windows 2-60
Power inverter switch 2-47
Power outlet. 2-48, 2-49
Power steering 5-134
Power steering fluid 8-13
Precautions
Maintenance precautions 8-5
On-pavement and off-road driving precautions 5-9
Precautions on booster seats 1-27, 1-34, 1-40, 1-46
Precautions on child restraints. 1-27, 1-34, 1-40, 1-46
Precautions on seat belt usage 1-16
Precautions on supplemental restraint system 1-49
Precautions when starting and driving 5-4
Predictive Forward Collision Warning (PFCW). 5-117
Push starting 6-12

R

Radio
Car phone or CB radio. 4-113
FM/AM/SAT radio with compact disc (CD) player 4-72
Steering wheel audio control switch 4-99
Rain sensor. 2-34
Readiness for inspection maintenance (I/M) test 9-32
Rear Cross Traffic Alert (RCTA) 5-66
Rear power windows 2-60
RearView Monitor 4-23
Rear window and outside mirror defroster switch. 2-36
Rear window wiper and washer switches . . .2-35
Recommended Fluids. 9-2
Recorders
Event Data 9-33
Refrigerant recommendation 9-7
Registering a vehicle in another country 9-10
Remote Start 3-19, 5-17
Reporting safety defects (US only). 9-31
Roadside assistance program 6-2
Roof rack 2-57

S

Safety
Child safety rear door lock 3-6
Child seat belts 1-27, 1-34, 1-40, 1-46
Reporting safety defects (US only). 9-31
Seat adjustment
Front power seat adjustment 1-3

Second row bench seats 1-5, 1-7
Seatback pockets 2-51
Seat belt
Child safety. 1-25
Infants and small children 1-25
Injured Person 1-19
Larger children 1-26
Precautions on seat belt usage 1-16
Pregnant women. 1-19
Seat belt extenders 1-24
Seat belt maintenance. 1-24
Seat belts 1-16, 7-6
Three-point type with retractor 1-20
Seat belt extenders 1-24
Seat belt warning light 1-19, 2-12
Seats
2nd row bench seat adjustment 1-5, 1-7
Adjustment. 1-2
Armrests 1-8
Automatic drive positioner. 3-34
Front seats 1-2
Heated seats 2-42
Seats/floor mats 7-5
Security indicator light. 2-14
Security system
(INFINITI vehicle immobilizer system),
engine start 2-31, 3-4, 5-16
Security systems
Vehicle security system 2-30
Self-adjusting brakes 8-21
Service manual order form 9-34
Servicing air conditioner. 4-56
Spark plug replacement 8-18
Spark plugs 8-18
Specifications 9-8
Speedometer 2-5
SRS warning label 1-67
Stability control 5-136
Starting
Before starting the engine. 5-16
Jump starting 6-10, 8-17
Precautions when starting and driving 5-4
Push starting 6-12
Starting the engine 5-17
Starting the engine 5-17
Steering
Heated steering wheel 2-45
Power steering fluid 8-13
Power steering system. 5-134
Steering wheel 3-29
Steering wheel audio control switch 4-99
Stop light 8-26
Storage 2-51
Storage bin. 2-57
Storage tray 2-53
Sunglasses case. 2-54
Sunglasses holder 2-54
Sunroof. 7-4
Sun visors 3-31
Supplemental air bag warning labels 1-67
Supplemental air bag warning light . . .1-67, 2-12
Supplemental front impact air bag system . . .1-56
Supplemental restraint system
Information and warning labels 1-67
Precautions on supplemental restraint
system 1-49
Supplemental restraint system
(Supplemental air bag system) 1-49
Switch
Autolight switch 2-37
Automatic power window switch 2-60
Fog light switch 2-41
Hazard warning flasher switch 6-2
Headlight aiming control 2-39
Headlight and turn signal switch 2-36
Headlight control switch 2-37
Instrument brightness control 2-40
Power door lock switch 3-5, 3-6
Power inverter switch 2-47
Rear window and outside mirror defroster
switch. 2-36
Rear window wiper and washer
switches 2-35
Steering wheel switch for audio
control/Bluetooth® Hands-Free Phone
System 4-99
Turn signal switch 2-40
Vehicle dynamic control (VDC) off
switch. 2-47

T

Tachometer 2-6
Temperature gauge
Engine coolant temperature gauge 2-6
Theft
(INFINITI vehicle immobilizer system),
engine start 2-31, 3-4, 5-16
Three-way catalyst 5-4
Tire
Flat tire 6-3
Spare tire 6-5, 8-38
Tire and Loading Information label 9-12
Tire chains 8-35
Tire pressure 8-28
Tire rotation. 8-36
Types of tires 8-34

Uniform tire quality grading 9-30
Wheels and tires 8-28
Wheel/tire size 9-9
Tire pressure 8-28
Low tire pressure warning light 2-10
Tire Pressure Monitoring System (TPMS) 5-5
Top tether strap child restraint 1-31
Towing
Flat towing 9-29
Towing load/specification 9-22
Tow truck towing 6-13
Trailer towing 9-18
Towing a trailer 9-18
Transceiver
HomeLink® Universal
Transceiver 2-67, 2-69, 2-70
Transmission
Continuously Variable Transmission (CVT)
fluid 8-13
Driving with Continuously Variable
Transmission (CVT) 5-18
Travel (See registering a vehicle in another
country) 9-10
Trip odometer 2-5
Turn signal switch 2-40

U

Uniform tire quality grading 9-30
USB interface
Audio file operation 4-84, 4-85
Video file operation 4-86
USB (Universal Serial Bus) Connection Port
(models with Navigation System) 4-84
USB (Universal Serial Bus) Connection Port
(models without Navigation System) 4-83

V

Vanity mirror 3-31
Vehicle dimensions and weights 9-9
Vehicle dynamic control (VDC) off switch . . .2-47
Vehicle dynamic control (VDC) system 5-136
Vehicle Dynamic Control (VDC) system . . .5-136
Vehicle identification 9-10
Vehicle identification number (VIN) 9-10
Vehicle identification number (VIN)
(Chassis number) 9-10
Vehicle identification number (VIN) plate 9-10
Vehicle immobilizer system 5-16
Vehicle Information Display 2-16
Vehicle loading information 9-14
Vehicle recovery 6-15, 6-16
Vehicle security system 2-30
(INFINITI vehicle immobilizer system),
engine start 2-31, 3-4, 5-16
Vents 4-47
Visors 3-31
Voice Prompt Interrupt 4-117, 4-129
Voice recognition system 4-139

W

Warning
Air bag warning light 1-67, 2-12
Anti-lock brake warning light 2-9
Battery charge warning light 2-9
Blind Spot Intervention (BSI) warning
light 5-46
Blind Spot Warning (BSW) warning
light 5-37
Brake warning light 2-9
Distance Control Assist (DCA) 5-95
Hazard warning flasher switch 6-2
Lane Departure Prevention . .5-26, 5-31, 5-34
Lane Departure Warning
light 5-26, 5-31, 5-34
Loose fuel cap warning 2-30
Low fuel warning light 2-11, 2-27
Low tire pressure warning light 2-10
Low windshield-washer fluid warning
light 2-27
Passenger air bag and status light 1-58
Seat belt warning light 1-19, 2-12
Supplemental air bag warning light .1-67, 2-12
Vehicle security system 2-30
Warning/indicator lights and audible
reminders 2-8, 2-9, 2-13
Warning labels (for SRS) 1-67
Warning/indicator lights and audible
reminders 2-8, 2-9, 2-13
Audible reminders 2-8, 2-9, 2-13
Indicator lights 2-8, 2-9, 2-13
Warning lights 2-8, 2-9, 2-13
Warning lights 2-8, 2-9, 2-13
Warning systems switch 2-46
Washer switch
Rear window wiper and washer
switches 2-35
Weights (See dimensions and weights) 9-9
Wheels and tires 8-28
Wheel/tire size 9-9

When traveling or registering in another country 9-10
Windows 2-58
Locking passengers' windows 2-59
Power rear windows 2-60
Power windows 2-58
Rear power windows 2-60
Windshield-washer fluid. 8-14
Windshield wiper blades 8-19
Wiper
Rear window wiper and washer switches 2-35
Wiper blades. 8-19
Wiper and washer switch 2-32

FUEL RECOMMENDATION:

INFINITI recommends the use of unleaded premium gasoline with an octane rating of at least 91 AKI (Anti-Knock Index) number (Research octane number 96). If unleaded premium gasoline is not available, you may use unleaded regular gasoline with an octane rating of at least 87 AKI number (Research octane number 91), but you may notice a decrease in performance.

⚠ CAUTION

- **Using a fuel other than that specified could adversely affect the emission control system, and may also affect the warranty coverage.**
- **Under no circumstances should a leaded gasoline be used, because this will damage the three-way catalyst.**
- **Do not use E-15 or E-85 fuel in your vehicle. Your vehicle is not designed to run on E-15 E-85 fuel. Using E-15 or E-85 fuel in a vehicle not specifically designed for E-15 or E-85 fuel can adversely affect the emission control devices and systems of the vehicle. Damage caused by such fuel is not covered by the INFINITI New Vehicle Limited Warranty.**
- **Do not use fuel that contains the octane booster methylcyclopentadienyl manganese tricarbonyl (MMT). Using fuel containing MMT may adversely affect vehicle performance and vehicle emissions. Not all fuel dispensers are labeled to indicate MMT content, so you may have to consult your gasoline retailer for more details. Note that Federal and California laws prohibit the use of MMT in reformulated gasoline.**
- **U.S. government regulations require ethanol dispensing pumps to be identified by a small, square, orange and black label with the common abbreviation or the appropriate percentage for that region.**

For additional information, refer to “Recommended fluids/lubricants and capacities” in the “Technical and consumer information” section of this manual.

ENGINE OIL RECOMMENDATION:

- Genuine NISSAN engine oil or equivalent
- Engine oil with API Certification Mark
- Viscosity SAE 0W-20

For additional information, refer to “Engine oil and oil filter recommendations” in the “Technical and consumer information” section of this manual.

COLD TIRE PRESSURE:

For additional information, refer to “Tire and loading information label” in the “Technical and consumer information” section of this manual.

The label is typically located on the driver side center pillar or on the driver’s door. For additional information, refer to “Wheels and tires” in the “Maintenance and do-it-yourself” section of this manual.

RECOMMENDED NEW VEHICLE BREAK-IN PROCEDURE:

During the first 1,200 miles (2,000 km) of vehicle use, follow the break-in procedure recommendations for the future reliability and economy of your new vehicle. For additional information, refer to “Break-in schedule” in the “Starting and driving” section of this manual. Failure to follow these recommendations may result in vehicle damage or shortened engine life.

Printing: December 2015 (07) / OM16EA 0L50U0 / Printed in U.S.A.

INFINITI®