AUTOMATIC TRANSMISSION

SECTION AT

CONTENTS

TROUBLE DIAGNOSIS - INDEX 4
Alphabetical & P No. Index for DTC 4
PRECAUTIONS 6
Precautions for Supplemental Restraint System (SRS) "AIR BAG" and "SEAT BELT PRE-TENSIONER" 6
Precautions for On Board Diagnostic (OBD) System of A/T and Engine 6
Precautions 6
Service Notice or Precautions 8
Wiring Diagrams and Trouble Diagnosis 9
PREPARATION 10
Special Service Tools 10
OVERALL SYSTEM 12
A/T Electrical Parts Location 12
Circuit Diagram 13
Cross-sectional View 14
Hydraulic Control Circuit 15
Shift Mechanism 16
Control System 25
Control Mechanism 26
Control Valve 31
ON BOARD DIAGNOSTIC SYSTEM DESCRIPTION 33
Introduction 33
OBD-II Function for A/T System 33
One or Two Trip Detection Logic of OBD-II 33
OBD-II Diagnostic Trouble Code (DTC) 33
Malfunction Indicator Lamp (MIL) 37
CONSULT 37
Diagnostic Procedure Without CONSULT 46
TROUBLE DIAGNOSIS - INTRODUCTION 53
Introduction 53
Work Flow 57
TROUBLE DIAGNOSIS - BASIC INSPECTION 59
A/T Fluid Check 59
Stall Test 59
Line Pressure Test 62
Road Test 63
TROUBLE DIAGNOSIS - GENERAL DESCRIPTION 81
Symptom Chart 81
TCM Terminals and Reference Value 92
TROUBLE DIAGNOSIS FOR POWER SUPPLY 96
Wiring Diagram - AT - MAIN 96
DTC P0705 PARK/NEUTRAL POSITION SWITCH 99
Description 99
Wiring Diagram - AT - PNP/SW 101
Diagnostic Procedure 102
Component Inspection 104
DTC P0710 A/T FLUID TEMPERATURE SENSOR CIRCUIT 105
Description 105
Wiring Diagram - AT - FTS 107
Diagnostic Procedure 108
Component Inspection 109
DTC P0720 VEHICLE SPEED SENSOR.A/T (REVOLUTION SENSOR) 110
Description 110
Wiring Diagram - AT - VSSA/T 112
Diagnostic Procedure 113
Component Inspection 114
DTC P0725 ENGINE SPEED SIGNAL 115
Description 115
Wiring Diagram - AT - ENGSS 116
Diagnostic Procedure 117
DTC P0731 IMPROPER SHIFTING TO 1ST GEAR POSITION 119
Description 119
Wiring Diagram - AT - 1ST 122
Diagnostic Procedure 123
Component Inspection 124
DTC P0732 IMPROPER SHIFTING TO 2ND GEAR POSITION 125
Description 125
Wiring Diagram - AT - 2ND 128
Diagnostic Procedure 129
Component Inspection 130

CONTENTS (Cont'd)

DTC P0733 IMPROPER SHIFTING TO 3RD GEAR POSITION 131
Description 131
Wiring Diagram - AT - 3RD....134
Diagnostic Procedure 135
Component Inspection....136
DTC P0734 IMPROPER SHIFTING TO 4TH GEAR POSITION 137
Description 137
Wiring Diagram - AT - 4TH....141
Diagnostic Procedure 142
Component Inspection....146
DTC P0740 TORQUE CONVERTER CLUTCH SOLENOID VALVE....147
Description 147
Wiring Diagram - AT - TCV....149
Diagnostic Procedure 150
Component Inspection....151
DTC P0744 IMPROPER LOCK-UP OPERATION....152
Description 152
Wiring Diagram - AT - TCCSIG 155
Diagnostic Procedure 156
Component Inspection....160
DTC P0745 LINE PRESSURE SOLENOID VALVE ...161
Description 161
Wiring Diagram - AT - LPSV....163
Diagnostic Procedure 164
Component Inspection....165
DTC P0750 SHIFT SOLENOID VALVE A 167
Description 167
Wiring Diagram - AT - SSV/A 168
Diagnostic Procedure 169
Component Inspection....170
DTC P0755 SHIFT SOLENOID VALVE B 171
Description 171
Wiring Diagram - AT - SSV/B 172
Diagnostic Procedure 173
Component Inspection....174
DTC P1705 THROTTLE POSITION SENSOR 175
Description 175
Wiring Diagram - AT - TPS....178
Diagnostic Procedure 179
Component Inspection....183
DTC P1760 OVERRUN CLUTCH SOLENOID VALVE....184
Description 184
Wiring Diagram - AT - OVRCSV....186
Diagnostic Procedure 187
Component Inspection....188
DTC BATT/FLUID TEMP SEN (A/T FLUID TEMP SENSOR CIRCUIT AND TCM POWER SOURCE)....189
Description 189
Wiring Diagram - AT - BA/FTS 191
Diagnostic Procedure 192
Component Inspection....194
VEHICLE SPEED SENSOR.MTR....195
Description 195
Wiring Diagram - AT - VSSMTR....197
Diagnostic Procedure 198
CONTROL UNIT (RAM), CONTROL UNIT (ROM)....199
Description 199
Diagnostic Procedure 200
CONTROL UNIT (EEP ROM)....201
Description 201
Diagnostic Procedure 202
TROUBLE DIAGNOSES FOR SYMPTOMS....203
Wiring Diagram - AT - NONDTC 203
1. O/D OFF Indicator Lamp Does Not Come On....207
2. Engine Cannot Be Started In ″P″ and ″N″ Position 209
3. In ″P″ Position, Vehicle Moves Forward Or Backward When Pushed 210
4. In ″N″ Position, Vehicle Moves 211
5. Large Shock. ″N″ -> ″R″ Position 213
6. Vehicle Does Not Creep Backward In ″R″ Position 215
7. Vehicle Does Not Creep Forward In ″D″, ″2″ Or ″1″ Position....218
8. Vehicle Cannot Be Started From D_1 221
9. A/T Does Not Shift: D_1 -> D_2 Or Does Not Kickdown: D_4 -> D_2....224
10. A/T Does Not Shift: D_2 -> D_3....227
11. A/T Does Not Shift: D_3 -> D_4....230
12. A/T Does Not Perform Lock-up 233
13. A/T Does Not Hold Lock-up Condition 235
14. Lock-up Is Not Released....237
15. Engine Speed Does Not Return To Idle (Light Braking D_4 -> D_3)....238
16. Vehicle Does Not Start From D_1 240
17. A/T Does Not Shift: D_4 -> D_3, When Overdrive Control Switch ″ON″ -> ″OFF″ 241
18. A/T Does Not Shift: D_3 -> 2_2, When Selector Lever ″D″ -> ″2″ Position....242
19. A/T Does Not Shift: 2_2 -> 1_1, When Selector Lever ″2″ -> ″1″ Position 243
20. Vehicle Does Not Decelerate By Engine Brake....244
21. TCM Self-diagnosis Does Not Activate (PNP, Overdrive Control and Throttle Position Switches Circuit Checks) 244
A/T SHIFT LOCK SYSTEM....252
Description 252
Wiring Diagram - SHIFT -....253
Diagnostic Procedure 254

CONTENTS (Cont'd)

Component Check 256
KEY INTERLOCK CABLE 257
Components 257
Removal 257
Installation 258
ON-VEHICLE SERVICE 259
Control Valve Assembly and Accumulators 259
Revolution Sensor Replacement 260
Rear Oil Seal Replacement 260
Parking Components Inspection 260
Park/Neutral Position Switch Adjustment 260
Manual Control Linkage Adjustment 261
REMOVAL AND INSTALLATION 262
Removal 262
Installation 263
OVERHAUL 265
Components 265
Oil Channel 267
Locations of Needle Bearings, Thrust Washers and Snap Rings 268
DISASSEMBLY 269
REPAIR FOR COMPONENT PARTS 280
Oil Pump 280
Control Valve Assembly 284
Control Valve Upper Body 290
Control Valve Lower Body 295
Reverse Clutch 297
High Clutch 301
Forward and Overrun Clutches 303
Low & Reverse Brake 307
Forward Clutch Drum Assembly 311
Rear Internal Gear and Forward Clutch Hub 313
Band Servo Piston Assembly 316
Parking Pawl Components 320
ASSEMBLY 322
Assembly (1) 322
Adjustment 330
Assembly (2) 332
SERVICE DATA AND SPECIFICATIONS (SDS) 339
General Specifications 339
Shift Schedule 339
Stall Revolution 339
Line Pressure 339
Return Springs 340
Accumulator O-ring 341
Clutches and Brakes 341
Oil Pump and Low One-way Clutch 343
Total End Play 343
Reverse Clutch Drum End Play 344
Removal and Installation 344
Shift Solenoid Valves 344
Solenoid Valves 344
A/T Fluid Temperature Sensor 344
Revolution Sensor 344
Dropping Resistor 344

Alphabetical & P No. Index for DTC

NBAT0179

ALPHABETICAL INDEX FOR DTC

NBAT0179S01

Items (CONSULT screen terms)	DTC		Reference page
	ECM*1	CONSULT GST*2	
A/T 1ST GR FNCTN	1103	P0731	AT-119
A/T 2ND GR FNCTN	1104	P0732	AT-125
A/T 3RD GR FNCTN	1105	P0733	AT-131
A/T 4TH GR FNCTN	1106	P0734	AT-137
A/T TCC S/V FNCTN	1107	P0744	AT-152
ATF TEMP SEN/CIRC	1208	P0710	AT-105
ENGINE SPEED SIG	1207	P0725	AT-115
L/PRESS SOL/CIRC	1205	P0745	AT-161
O/R CLTCH SOL/CIRC	1203	P1760	AT-184
PNP SW/CIRC	1101	P0705	AT-99
SFT SOL A/CIRC*3	1108	P0750	AT-167
SFT SOL B/CIRC*3	1201	P0755	AT-171
TCC SOLENOID/CIRC	1204	P0740	AT-147
TP SEN/CIRC A/T*3	1206	P1705	AT-175
VEH SPD SEN/CIR AT*4	1102	P0720	AT-110

*1: In Diagnostic Test Mode II (Self-diagnostic results), these numbers are controlled by NISSAN.
*2: These numbers are prescribed by SAE J2012.
*3: When the fail-safe operation occurs, the MIL illuminates.
*4: The MIL illuminates when both the “Revolution sensor signal” and the “Vehicle speed sensor signal” meet the fail-safe condition at the same time.

P NO. INDEX FOR DTC

=NBAT0179S02

DTC		Items (CONSULT screen terms)	Reference page
CONSULT GST*2	ECM*1		
P0705	1101	PNP SW/CIRC	AT-99
P0710	1208	ATF TEMP SEN/CIRC	AT-105
P0720	1102	VEH SPD SEN/CIR AT*4	AT-110
P0725	1207	ENGINE SPEED SIG	AT-115
P0731	1103	A/T 1ST GR FNCTN	AT-119
P0732	1104	A/T 2ND GR FNCTN	AT-125
P0733	1105	A/T 3RD GR FNCTN	AT-131
P0734	1106	A/T 4TH GR FNCTN	AT-137
P0740	1204	TCC SOLENOID/CIRC	AT-147
P0744	1107	A/T TCC S/V FNCTN	AT-152
P0745	1205	L/PRESS SOL/CIRC	AT-161
P0750	1108	SFT SOL A/CIRC*3	AT-167
P0755	1201	SFT SOL B/CIRC*3	AT-171
P1705	1206	TP SEN/CIRC A/T*3	AT-175
P1760	1203	O/R CLTCH SOL/CIRC	AT-184

*1: In Diagnostic Test Mode II (Self-diagnostic results), these numbers are controlled by NISSAN.
*2: These numbers are prescribed by SAE J2012.
*3: When the fail-safe operation occurs, the MIL illuminates.
*4: The MIL illuminates when both the "Revolution sensor signal" and the "Vehicle speed sensor signal" meet the fail-safe condition at the same time.

Precautions for Supplemental Restraint System (SRS) "AIR BAG" and "SEAT BELT PRE-TENSIONER"

NBAT0001

The Supplemental Restraint System such as "AIR BAG" and "SEAT BELT PRE-TENSIONER" used along with a seat belt, helps to reduce the risk or severity of injury to the driver and front passenger for certain types of collision. The SRS system composition which is available to INFINITI QX4 is as follows:

- For a frontal collision
  The Supplemental Restraint System consists of driver air bag module (located in the center of the steering wheel), front passenger air bag module (located on the instrument panel on passenger side), seat belt pre-tensioners, a diagnosis sensor unit, warning lamp, wiring harness and spiral cable.
- For a side collision
  The Supplemental Restraint System consists of side air bag module (located in the outer side of front seat), satellite sensor, diagnosis sensor unit (one of components of air bags for a frontal collision), wiring harness, warning lamp (one of components of air bags for a frontal collision).

Information necessary to service the system safely is included in the **RS section** of this Service Manual.

WARNING:

- **To avoid rendering the SRS inoperative, which could increase the risk of personal injury or death in the event of a collision which would result in air bag inflation, all maintenance must be performed by an authorized INFINITI dealer.**
- **Improper maintenance, including incorrect removal and installation of the SRS, can lead to personal injury caused by unintentional activation of the system. For removal of Spiral Cable and Air Bag Module, see the RS section.**
- **Do not use electrical test equipment on any circuit related to the SRS unless instructed to in this Service Manual. Spiral cable and wiring harnesses covered with yellow insulation tape either just before the harness connectors or for the complete harness are related to the SRS.**

Precautions for On Board Diagnostic (OBD) System of A/T and Engine

NBAT0002

The ECM has an on board diagnostic system. It will light up the malfunction indicator lamp (MIL) to warn the driver of a malfunction causing emission deterioration.

CAUTION:

- **Be sure to turn the ignition switch OFF and disconnect the negative battery terminal before any repair or inspection work. The open/short circuit of related switches, sensors, solenoid valves, etc. will cause the MIL to light up.**
- **Be sure to connect and lock the connectors securely after work. A loose (unlocked) connector will cause the MIL to light up due to an open circuit. (Be sure the connector is free from water, grease, dirt, bent terminals, etc.)**
- **Be sure to route and secure the harnesses properly after work. Interference of the harness with a bracket, etc. may cause the MIL to light up due to a short circuit.**
- **Be sure to connect rubber tubes properly after work. A misconnected or disconnected rubber tube may cause the MIL to light up due to a malfunction of the EGR system or fuel injection system, etc.**
- **Be sure to erase the unnecessary malfunction information (repairs completed) from the TCM and ECM before returning the vehicle to the customer.**

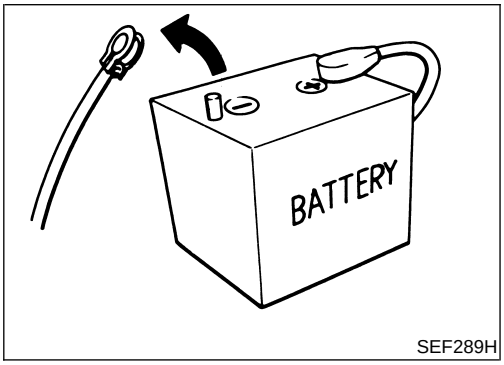

SEF289H

Precautions

NBAT0003

- **Before connecting or disconnecting the TCM harness connector, turn ignition switch "OFF" and disconnect negative battery terminal. Failure to do so may damage the TCM. Because battery voltage is applied to TCM even if ignition switch is turned off.**

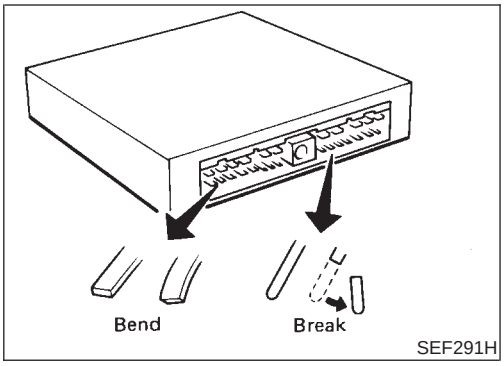

SEF291H

- **When connecting or disconnecting pin connectors into or from TCM, take care not to damage pin terminals (bend or break).**
  Make sure that there are not any bends or breaks on TCM pin terminal, when connecting pin connectors.

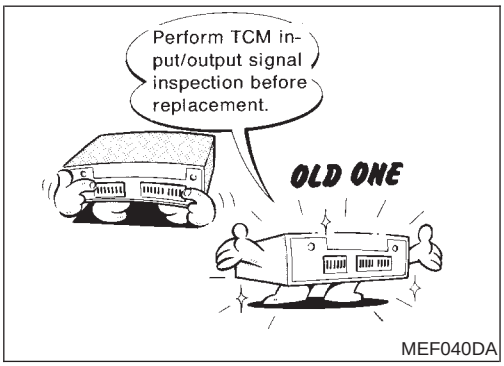

MEF040DA

- **Before replacing TCM, perform TCM input/output signal inspection and make sure whether TCM functions properly or not. (See page AT-92.)**

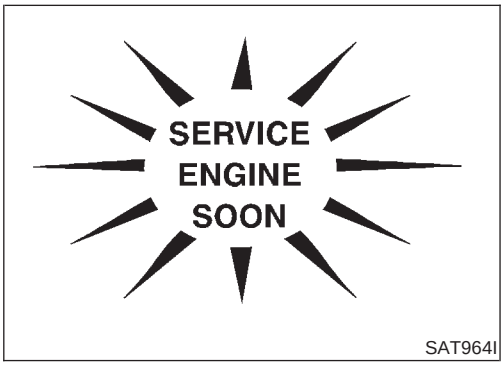

SAT964I

- **After performing each TROUBLE DIAGNOSIS, perform "DTC (Diagnostic Trouble Code) CONFIRMATION PROCEDURE".**
  The DTC should not be displayed in the "DTC CONFIRMATION PROCEDURE" if the repair is completed.

- Before proceeding with disassembly, thoroughly clean the outside of the transmission. It is important to prevent the internal parts from becoming contaminated by dirt or other foreign matter.
- Disassembly should be done in a clean work area.
- Use lint-free cloth or towels for wiping parts clean. Common shop rags can leave fibers that could interfere with the operation of the transmission.
- Place disassembled parts in order for easier and proper assembly.
- All parts should be carefully cleaned with a general purpose, non-flammable solvent before inspection or reassembly.
- Gaskets, seals and O-rings should be replaced any time the transmission is disassembled.
- It is very important to perform functional tests whenever they are indicated.
- The valve body contains precision parts and requires extreme care when parts are removed and serviced. Place disassembled valve body parts in order for easier and proper assembly. Care will also prevent springs and small parts from becoming scattered or lost.
- Properly installed valves, sleeves, plugs, etc. will slide along bores in valve body under their own weight.

- Before assembly, apply a coat of recommended ATF to all parts. Apply petroleum jelly to protect O-rings and seals, or hold bearings and washers in place during assembly. Do not use grease.
- Extreme care should be taken to avoid damage to O-rings, seals and gaskets when assembling.
- Replace ATF cooler if excessive foreign material is found in oil pan or clogging strainer. Refer to "ATF COOLER SERVICE" (Refer to AT-9).
- After overhaul, refill the transmission with new ATF.
- When the A/T drain plug is removed, only some of the fluid is drained. Old A/T fluid will remain in torque converter and ATF cooling system.
  Always follow the procedures when changing A/T fluid. Refer to MA-21, "Changing A/T Fluid".

Service Notice or Precautions

NBAT0004

FAIL-SAFE

NBAT0004S01

The TCM has an electronic Fail-Safe (limp home mode). This allows the vehicle to be driven even if a major electrical input/output device circuit is damaged.
Under Fail-Safe, the vehicle always runs in third gear, even with a shift lever position of "1", "2" or "D". The customer may complain of sluggish or poor acceleration.
When the ignition key is turned "ON" following Fail-Safe operation, O/D OFF indicator lamp blinks for about 8 seconds. (For "TCM SELF-DIAGNOSTIC PROCEDURE (No Tools)", refer to AT-46.)
Fail-Safe may occur without electrical circuit damage if the vehicle is driven under extreme conditions (such as excessive wheel spin followed by sudden braking). To recover normal shift pattern, turn the ignition key "OFF" for 5 seconds, then "ON".
The blinking of the O/D OFF indicator lamp for about 8 seconds will appear only once and be cleared. The customer may resume normal driving conditions.
Always follow the "WORK FLOW" (Refer to AT-57).
The SELF-DIAGNOSIS results will be as follows:
The first SELF-DIAGNOSIS will indicate damage to the vehicle speed sensor or the revolution sensor.
During the next SELF-DIAGNOSIS, performed after checking the sensor, no damages will be indicated.

TORQUE CONVERTER SERVICE

NBAT0004S04

The torque converter should be replaced under any of the following conditions:

- External leaks in the hub weld area.
- Converter hub is scored or damaged.
- Converter pilot is broken, damaged or fits poorly into crankshaft.
- Steel particles are found after flushing the cooler and cooler lines.
- Pump is damaged or steel particles are found in the converter.
- Vehicle has TCC shudder and/or no TCC apply. Replace only after all hydraulic and electrical diagnoses have been made. (Converter clutch material may be glazed.)
- Converter is contaminated with engine coolant containing antifreeze.
- Internal failure of stator roller clutch.
- Heavy clutch debris due to overheating (blue converter).
- Steel particles or clutch lining material found in fluid filter or on magnet when no internal parts in unit are worn or damaged — indicates that lining material came from converter.

The torque converter should not be replaced if:

- The fluid has an odor, is discolored, and there is no evidence of metal or clutch facing particles.

- The threads in one or more of the converter bolt holes are damaged.
- Transmission failure did not display evidence of damaged or worn internal parts, steel particles or clutch plate lining material in unit and inside the fluid filter.
- Vehicle has been exposed to high mileage (only). The exception may be where the torque converter clutch dampener plate lining has seen excess wear by vehicles operated in heavy and/or constant traffic, such as taxi, delivery or police use.

ATF COOLER SERVICE

NBAT0004S02

Replace ATF cooler if excessive foreign material is found in oil pan or clogging strainer.
Replace radiator lower tank (which includes ATF cooler) with a new one and flush cooler line using cleaning solvent and compressed air.

OBD-II SELF-DIAGNOSIS

NBAT0004S03

- A/T self-diagnosis is performed by the TCM in combination with the ECM. The results can be read through the blinking pattern of the O/D OFF indicator or the malfunction indicator lamp (MIL). Refer to the table on AT-38 for the indicator used to display each self-diagnostic result.
- The self-diagnostic results indicated by the MIL are automatically stored in both the ECM and TCM memories.
  Always perform the procedure "HOW TO ERASE DTC" on AT-35 to complete the repair and avoid unnecessary blinking of the MIL.
- The following self-diagnostic items can be detected using ECM self-diagnostic results mode* only when the O/D OFF indicator lamp does not indicate any malfunctions.

− PNP switch
− A/T 1st, 2nd, 3rd, or 4th gear function
− A/T TCC S/V function (lock-up)

*: For details of OBD-II, refer to EC-54, "Introduction".

- **Certain systems and components, especially those related to OBD, may use the new style slide-locking type harnesss connector. For description and how to disconnect, refer to EL-5, "Description".**

Wiring Diagrams and Trouble Diagnosis

NBAT0005

When you read wiring diagrams, refer to the following:

- GI-11, "HOW TO READ WIRING DIAGRAMS"
- EL-9, "POWER SUPPLY ROUTING" for power distribution circuit

When you perform trouble diagnosis, refer to the following:

- GI-34, "HOW TO FOLLOW TEST GROUP IN TROUBLE DIAGNOSIS"
- GI-23, "HOW TO PERFORM EFFICIENT DIAGNOSIS FOR AN ELECTRICAL INCIDENT"

Special Service Tools

NBAT0006

The actual shapes of Kent-Moore tools may differ from those of special service tools illustrated here.

Tool number (Kent-Moore No.) Tool name	Description
ST2505S001 (J34301-C) Oil pressure gauge set 1 ST25051001 (—) Oil pressure gauge 2 ST25052000 (—) Hose 3 ST25053000 (—) Joint pipe 4 ST25054000 (—) Adapter 5 ST25055000 (—) Adapter	Measuring line pressure 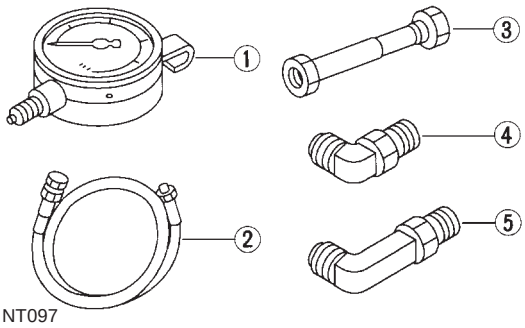 NT097
ST07870000 (J37068) Transmission case stand	Disassembling and assembling A/T **a: 182 mm (7.17 in)** **b: 282 mm (11.10 in)** **c: 230 mm (9.06 in)** **d: 100 mm (3.94 in)** 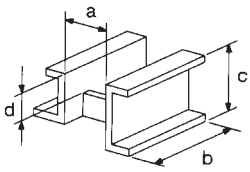 NT421
KV31102100 (J37065) Torque converter one-way clutch check tool	Checking one-way clutch in torque converter 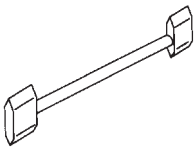 NT098
ST25850000 (J25721-A) Sliding hammer	Removing oil pump assembly **a: 179 mm (7.05 in)** **b: 70 mm (2.76 in)** **c: 40 mm (1.57 in) dia.** **d: M12 x 1.75P** 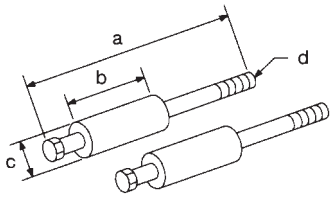 NT422
KV31102400 (J34285 and J34285-87) Clutch spring compressor	Removing and installing clutch return springs **a: 320 mm (12.60 in)** **b: 174 mm (6.85 in)** 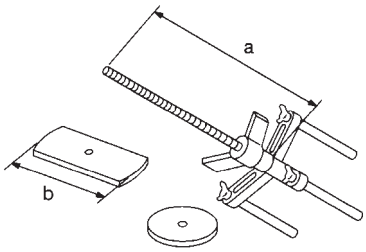 NT423

Tool number (Kent-Moore No.) Tool name	Description	
ST33200000 (J26082) Drift	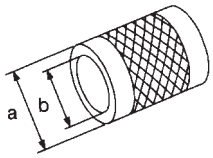 NT091	Installing oil pump housing oil seal Installing rear oil seal **a: 60 mm (2.36 in) dia.** **b: 44.5 mm (1.752 in) dia.**
(J34291) Shim setting gauge set	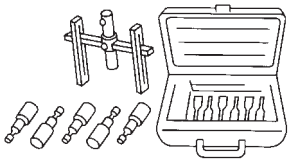 NT101	Selecting oil pump cover bearing race and oil pump thrust washer

A/T Electrical Parts Location

NBAT0007

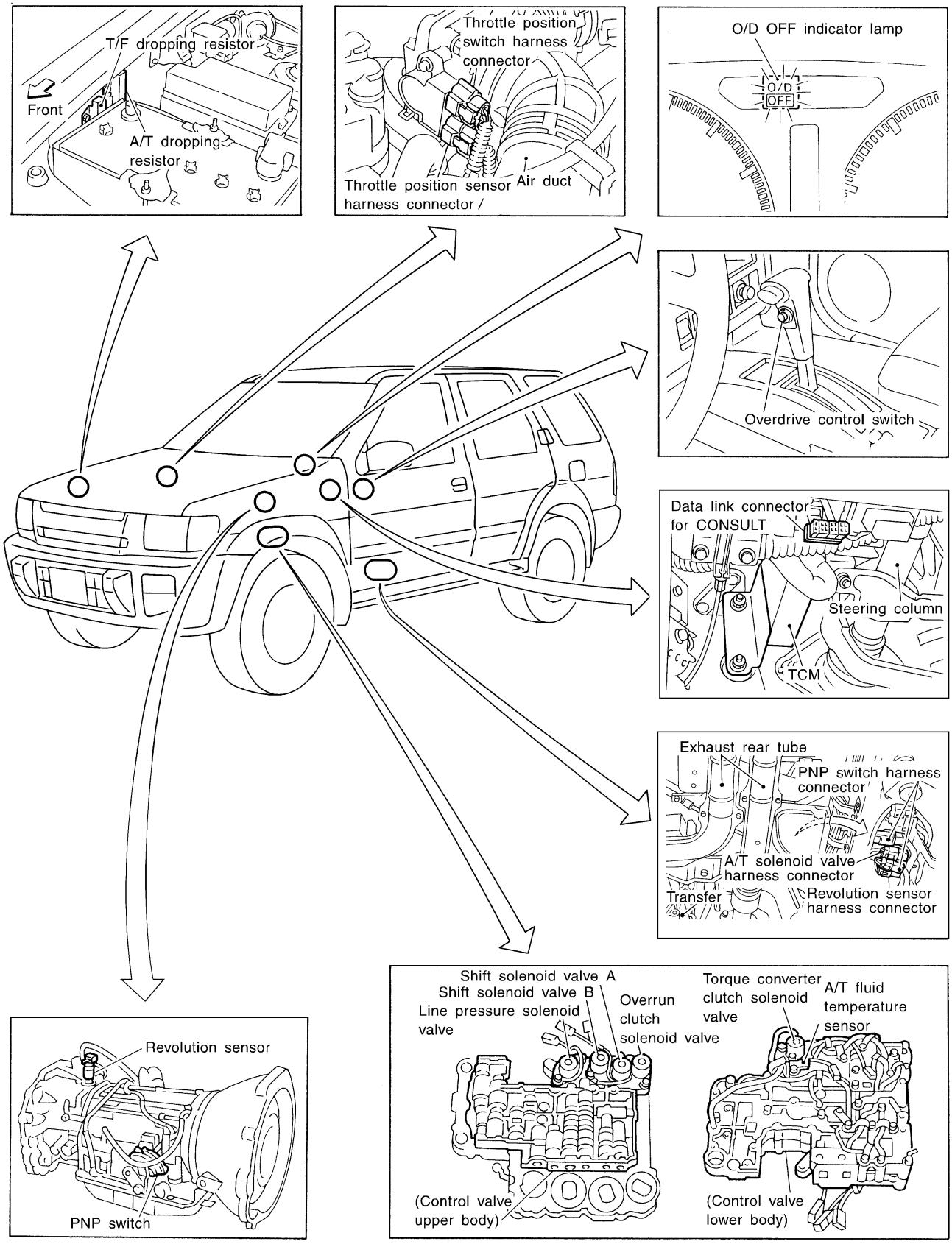

SAT512J

Circuit Diagram

NBAT0008

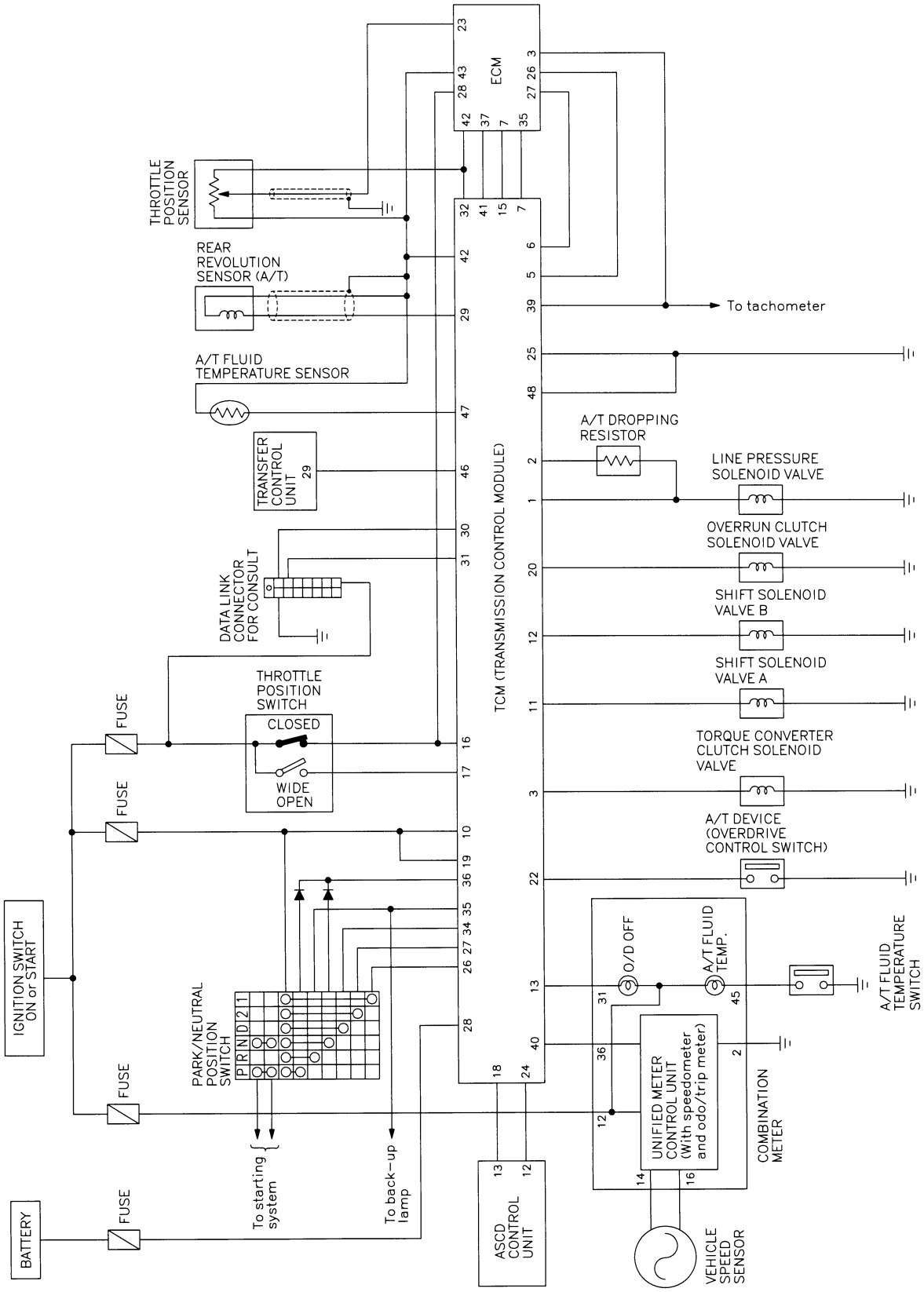

MAT725A

Cross-sectional View

NBAT0010

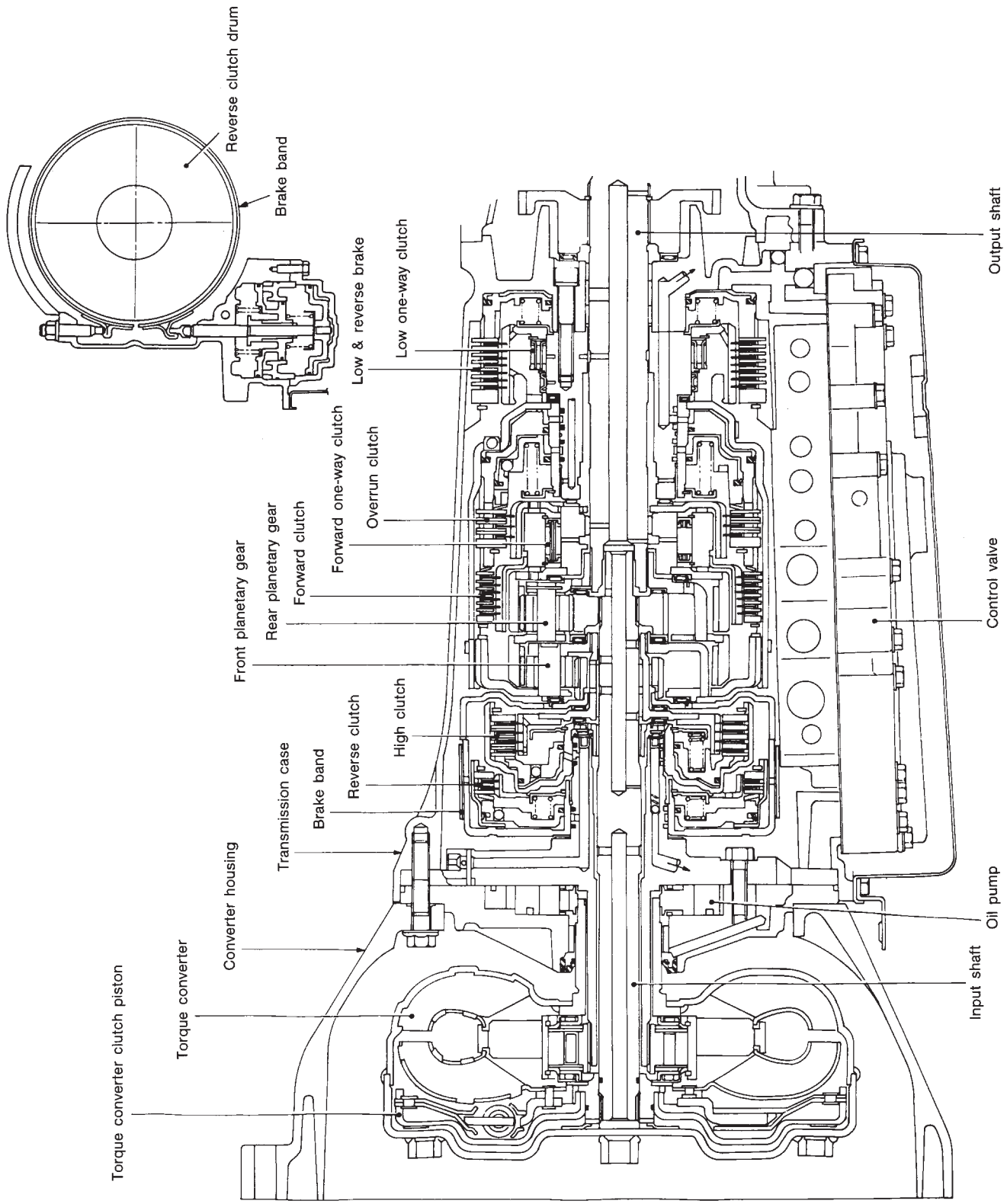

SAT125BA

Hydraulic Control Circuit

NBAT0011

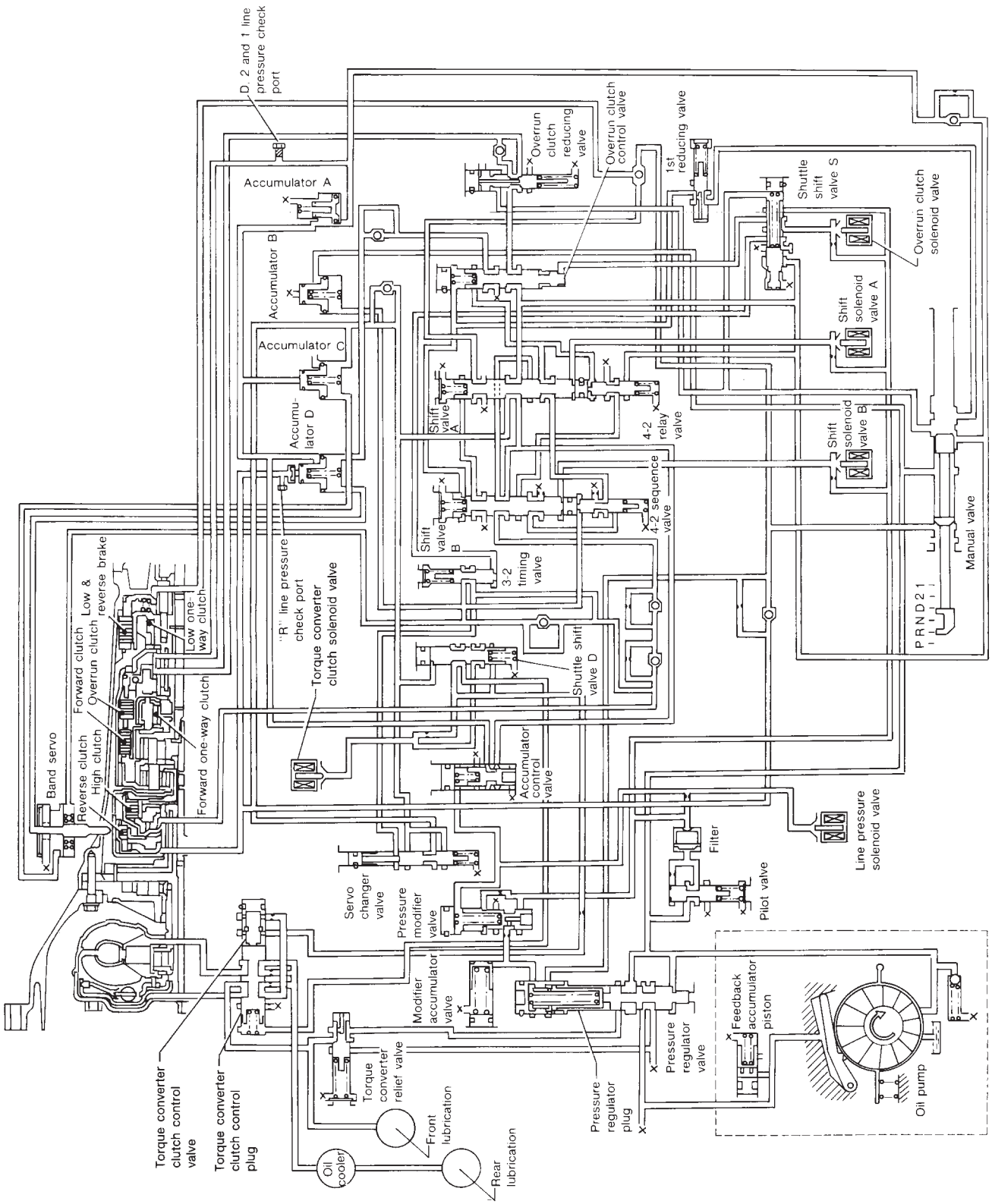

SAT624GA

Shift Mechanism

NBAT0012

The automatic transmission uses compact, dual planetary gear systems to improve power-transmission efficiency, simplify construction and reduce weight.
It also employs an optimum shift control and superwide gear ratios. They improve starting performance and acceleration during medium and high-speed operation.
Two one-way clutches are also employed: one is used for the forward clutch and the other for the low clutch. These one-way clutches, combined with four accumulators, reduce shifting shock to a minimum.

CONSTRUCTION

NBAT0012S01

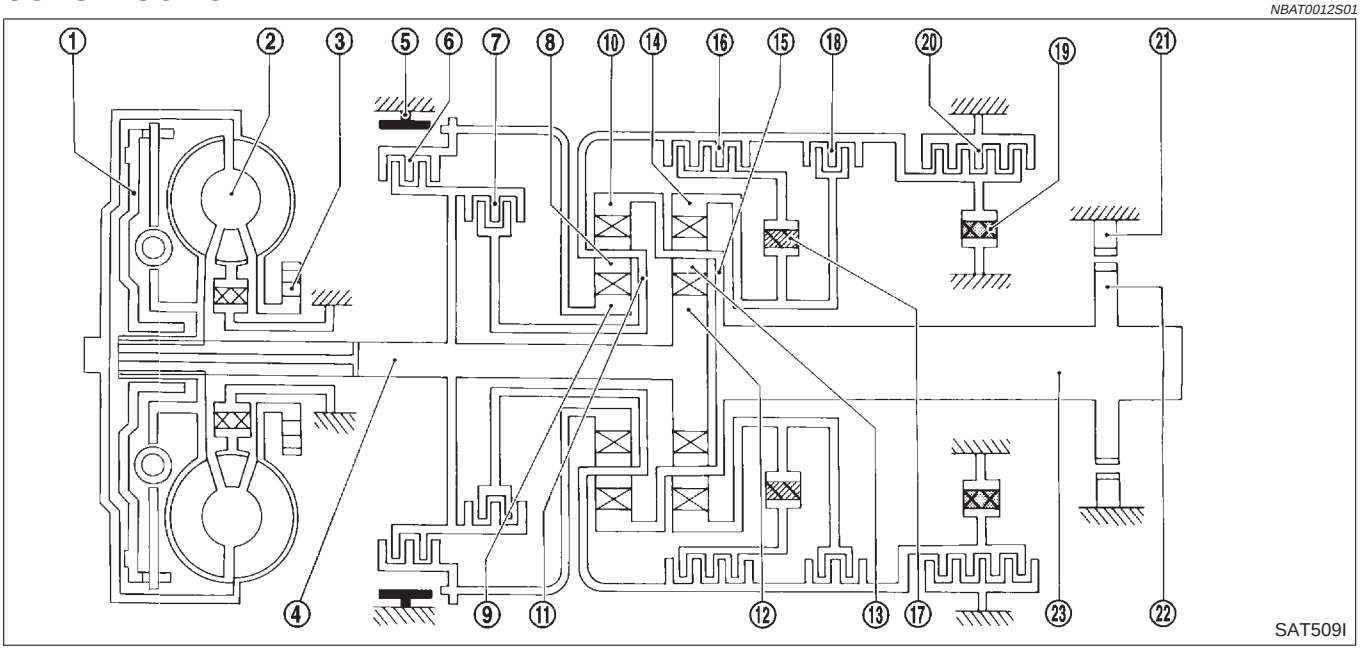

1. Torque converter clutch piston
2. Torque converter
3. Oil pump
4. Input shaft
5. Brake band
6. Reverse clutch
7. High clutch
8. Front pinion gear
9. Front sun gear
10. Front internal gear
11. Front planetary carrier
12. Rear sun gear
13. Rear pinion gear
14. Rear internal gear
15. Rear planetary carrier
16. Forward clutch
17. Forward one-way clutch
18. Overrun clutch
19. Low one-way clutch
20. Low & reverse brake
21. Parking pawl
22. Parking gear
23. Output shaft

FUNCTION OF CLUTCH AND BRAKE

NBAT0012S02

Clutch and brake components	Abbr.	Function
Reverse clutch **6**	R/C	To transmit input power to front sun gear **9**.
High clutch **7**	H/C	To transmit input power to front planetary carrier **11**.
Forward clutch **16**	F/C	To connect front planetary carrier **11** with forward one-way clutch **17**.
Overrun clutch **18**	O/C	To connect front planetary carrier **11** with rear internal gear **14**.
Brake band **5**	B/B	To lock front sun gear **9**.
Forward one-way clutch **17**	F/O.C	When forward clutch **16** is engaged, to stop rear internal gear **14** from rotating in opposite direction against engine revolution.
Low one-way clutch **19**	L/O.C	To stop front planetary carrier **11** from rotating in opposite direction against engine revolution.
Low & reverse brake **20**	L & R/B	To lock front planetary carrier **11**.

CLUTCH AND BAND CHART

NBAT0012S03

Shift position		Reverse clutch	High clutch	Forward clutch	Overrun clutch	Band servo 2nd apply	Band servo 3rd release	Band servo 4th apply	Forward one-way clutch	Low one-way clutch	Low & reverse brake	Lock-up	Remarks
P													PARK POSITION
R		◯									◯		REVERSE POSITION
N													NEUTRAL POSITION
D*4	1st			◯	*1D				B	B			Automatic shift 1 ⇔ 2 ⇔ 3 ⇔ 4
	2nd			◯	*1A	◯			B				
	3rd		◯	◯	*1A	*2C	C		B			*5◯	
	4th		◯	C		*3C	C	◯				◯	
2	1st			◯	◯				B	B			Automatic shift 1 ⇔ 2
	2nd			◯	◯	◯			B				
1	1st			◯	◯				B	B	◯		Locks (held stationary) in 1st speed 1 ⇐ 2
	2nd			◯	◯	◯			B				

*1: Operates when overdrive control switch is being set in "OFF" position.

*2: Oil pressure is applied to both 2nd "apply" side and 3rd "release" side of band servo piston. However, brake band does not contract because oil pressure area on the "release" side is greater than that on the "apply" side.

*3: Oil pressure is applied to 4th "apply" side in condition *2 above, and brake band contracts.

*4: A/T will not shift to 4th when overdrive control switch is set in "OFF" position.

*5: Operates when overdrive control switch is "OFF".

◯ : Operates.

A: Operates when throttle opening is less than 3/16, activating engine brake.

B: Operates during "progressive" acceleration.

C: Operates but does not affect power transmission.

D: Operates when throttle opening is less than 3/16, but does not affect engine brake.

POWER TRANSMISSION

=NBAT0012S04

"N" and "P" Positions

NBAT0012S0401

- "N" position
  No control members operate. Power from the input shaft is not transmitted to the output shaft since the clutch does not operate.
- "P" position
  Similar to the "N" position, no control members operate. The parking pawl interconnected with the select lever engages with the parking gear to mechanically hold the output shaft so that the power train is locked.

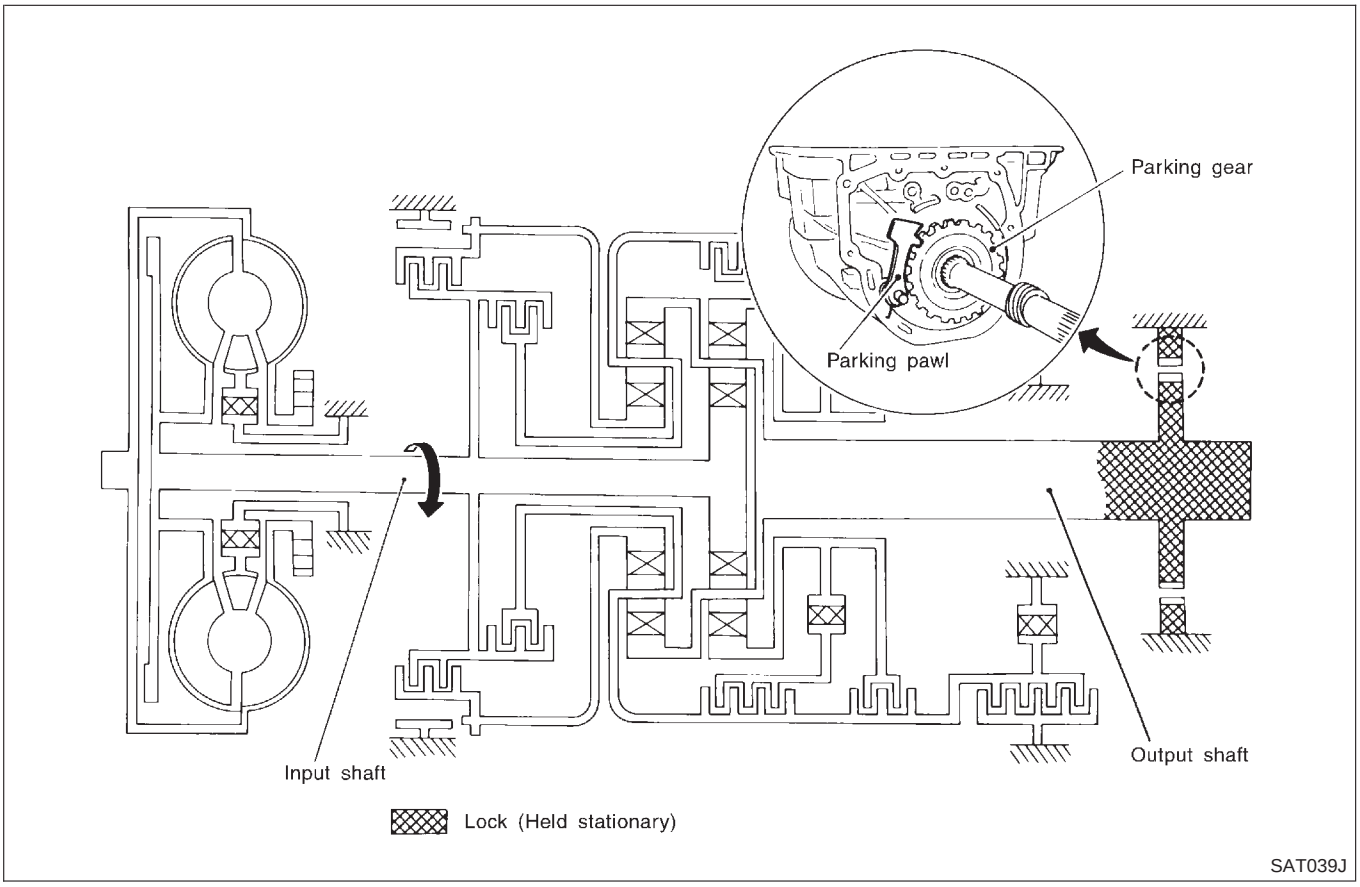

"1_1" Position

=NBAT0012S0406

Forward clutch **Forward one-way clutch** **Overrun clutch** **Low and reverse brake**	As overrun clutch engages, rear internal gear is locked by the operation of low and reverse brake. This is different from that of D_1 and 2_1.
Engine brake	Overrun clutch always engages, therefore engine brake can be obtained when decelerating.

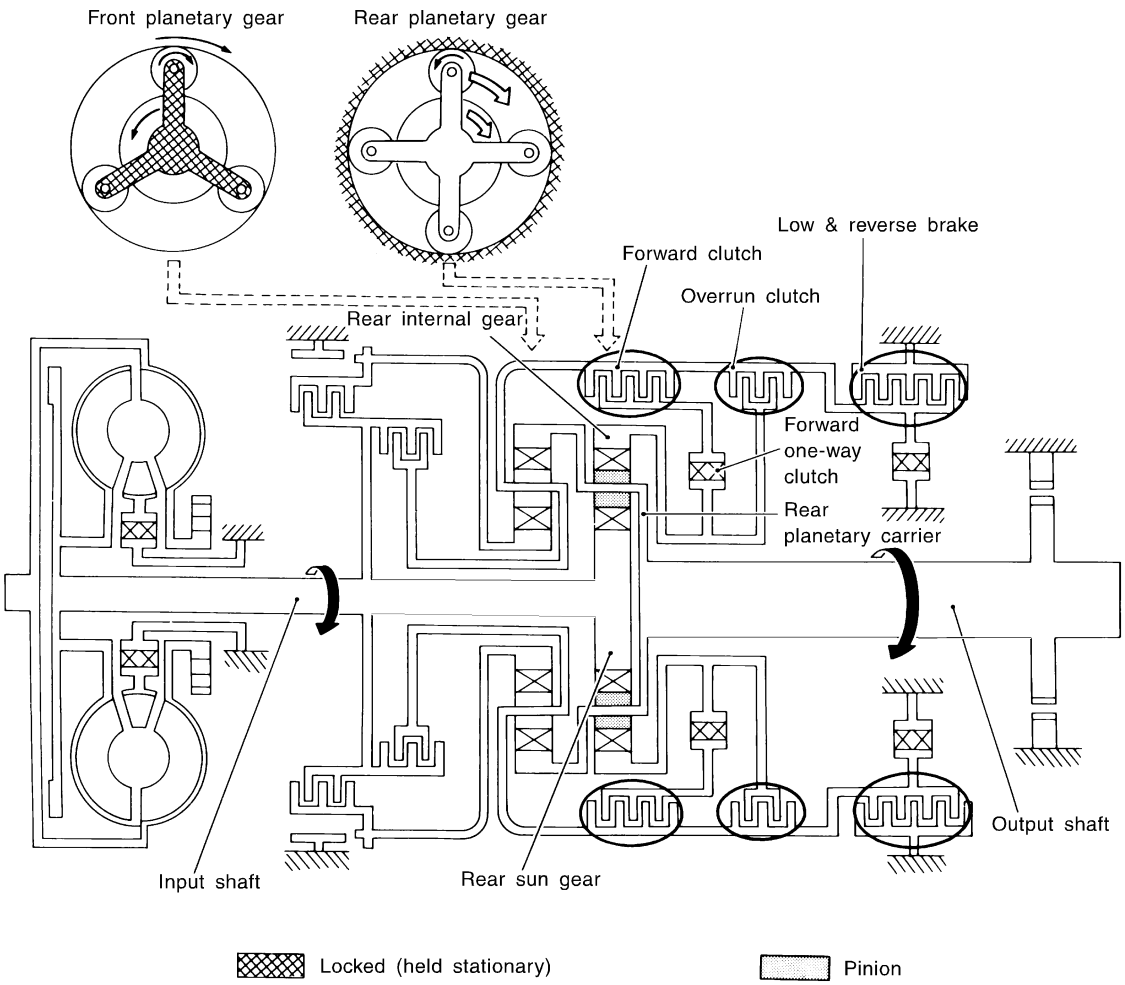

Power flow

Input shaft
⇩
Rear sun gear
⇩
Rear planetary gear ⇨ Output shaft

SAT100J

"D_1" and "2_1" Positions

=NBAT0012S0402

Forward one-way clutch **Forward clutch** **Low one-way clutch**	Rear internal gear is locked to rotate counterclockwise because of the functioning of these three clutches. (Start-up at D_1)
Overrun clutch engagement conditions (Engine brake)	D_1: Overdrive control switch in "OFF" Throttle opening less than 3/16 2_1: Throttle opening less than 3/16 At D_1 and 2_1 positions, engine brake is not activated due to free turning of low one-way clutch.

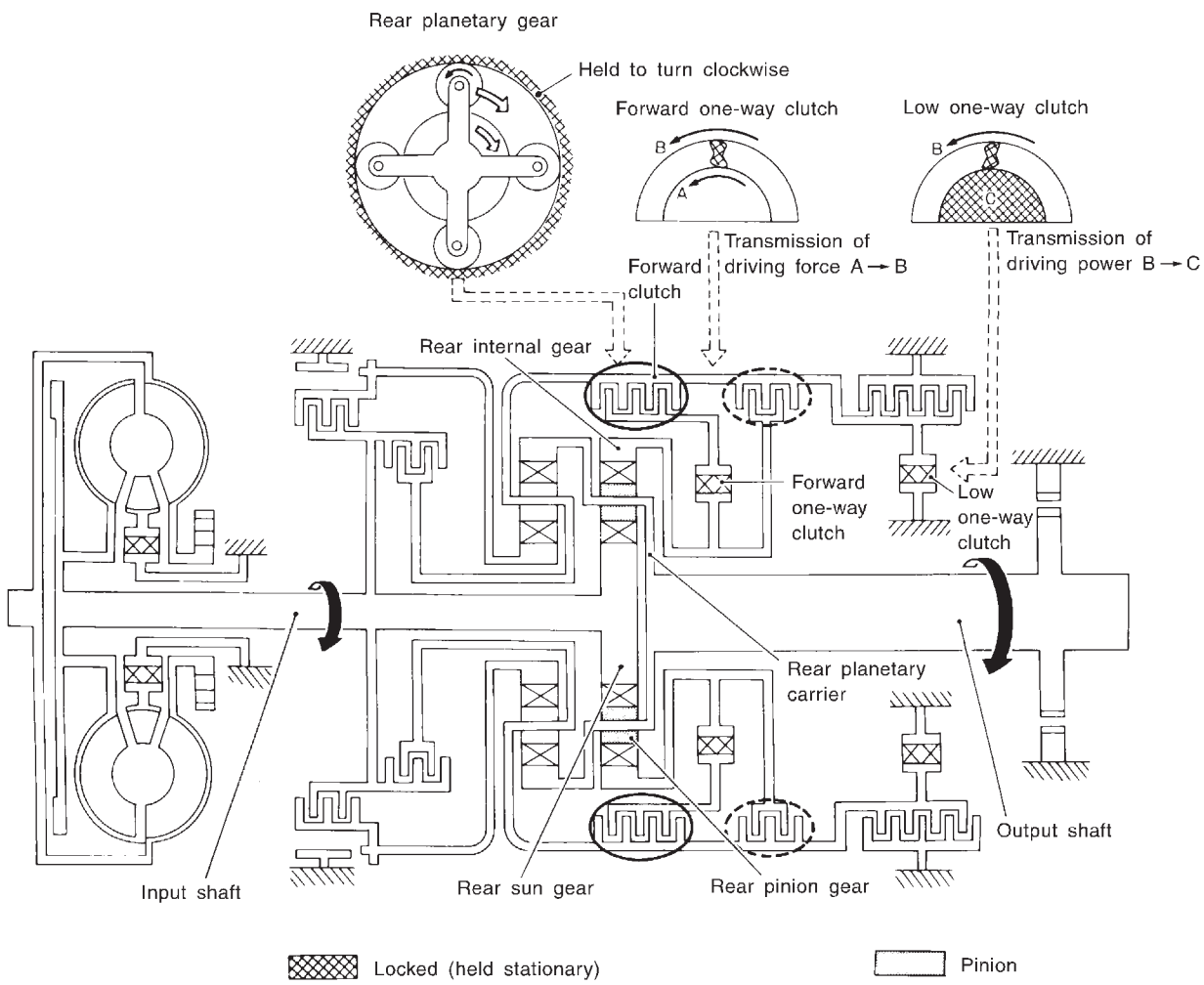

Power flow

Input shaft
⇩
Rear sun gear
⇩
Rear pinion gear
⇩
Rear planetary carrier → Output shaft

SAT096J

"D_2", "2_2" and "1_2" Positions

=NBAT0012S0403

Forward clutch **Forward one-way clutch** **Brake band**	Rear sun gear drives rear planetary carrier and combined front internal gear. Front internal gear now rotates around front sun gear accompanying front planetary carrier. As front planetary carrier transfers the power to rear internal gear through forward clutch and forward one-way clutch, this rotation of rear internal gear increases the speed of rear planetary carrier compared with that of the 1st speed.
Overrun clutch engagement conditions	D_2: Overdrive control switch in "OFF" Throttle opening less than 3/16 2_2: Throttle opening less than 3/16 1_2: Always engaged

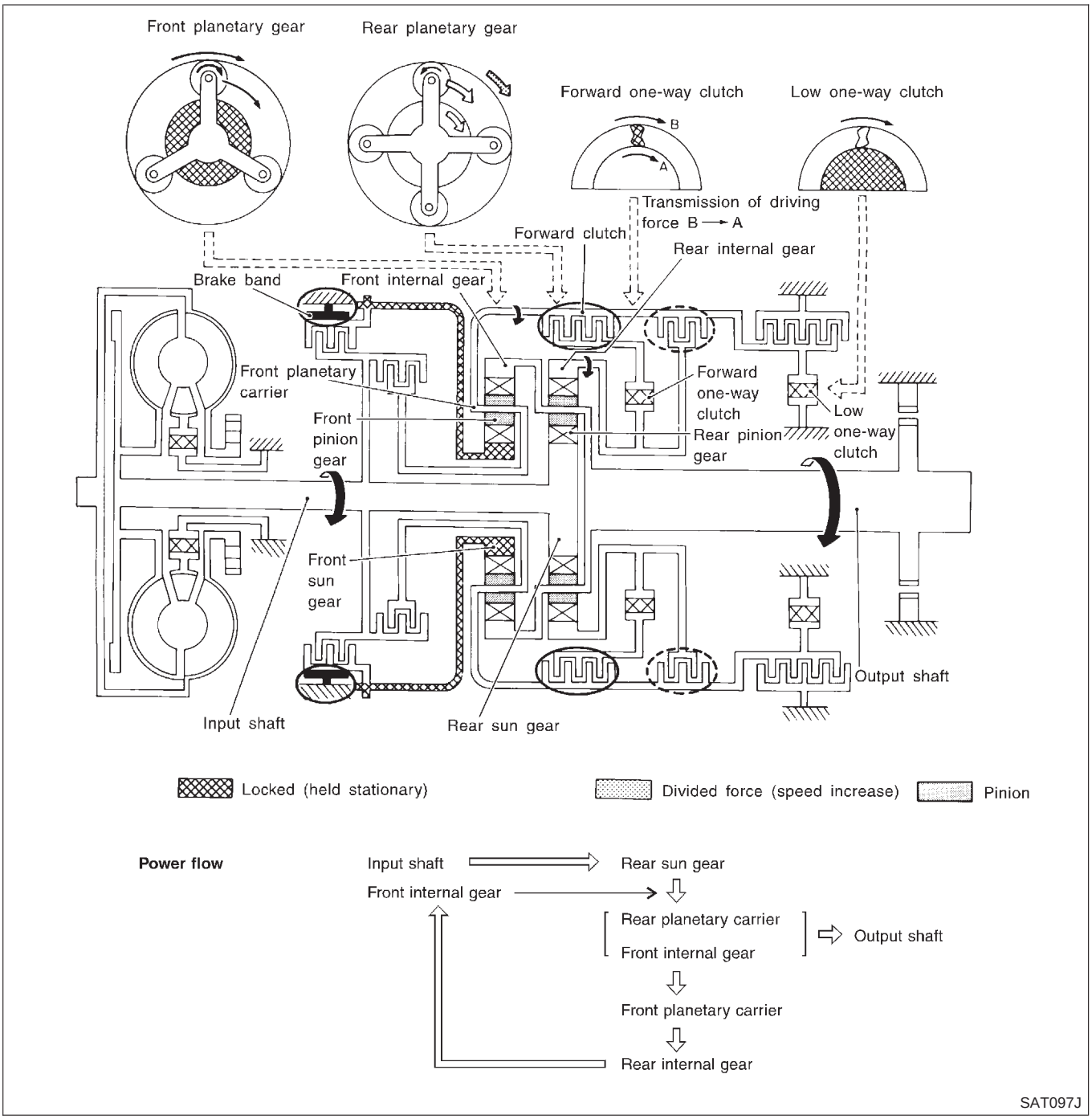

"D_3" Position

=NBAT0012S0404

High clutch **Forward clutch** **Forward one-way clutch**	Input power is transmitted to front planetary carrier through high clutch. And front planetary carrier is connected to rear internal gear by operation of forward clutch and forward one-way clutch. This rear internal gear rotation and another input (the rear sun gear) accompany rear planetary carrier to turn at the same speed.
Overrun clutch engagement conditions	D_3: Overdrive control switch in "OFF" Throttle opening less than 3/16

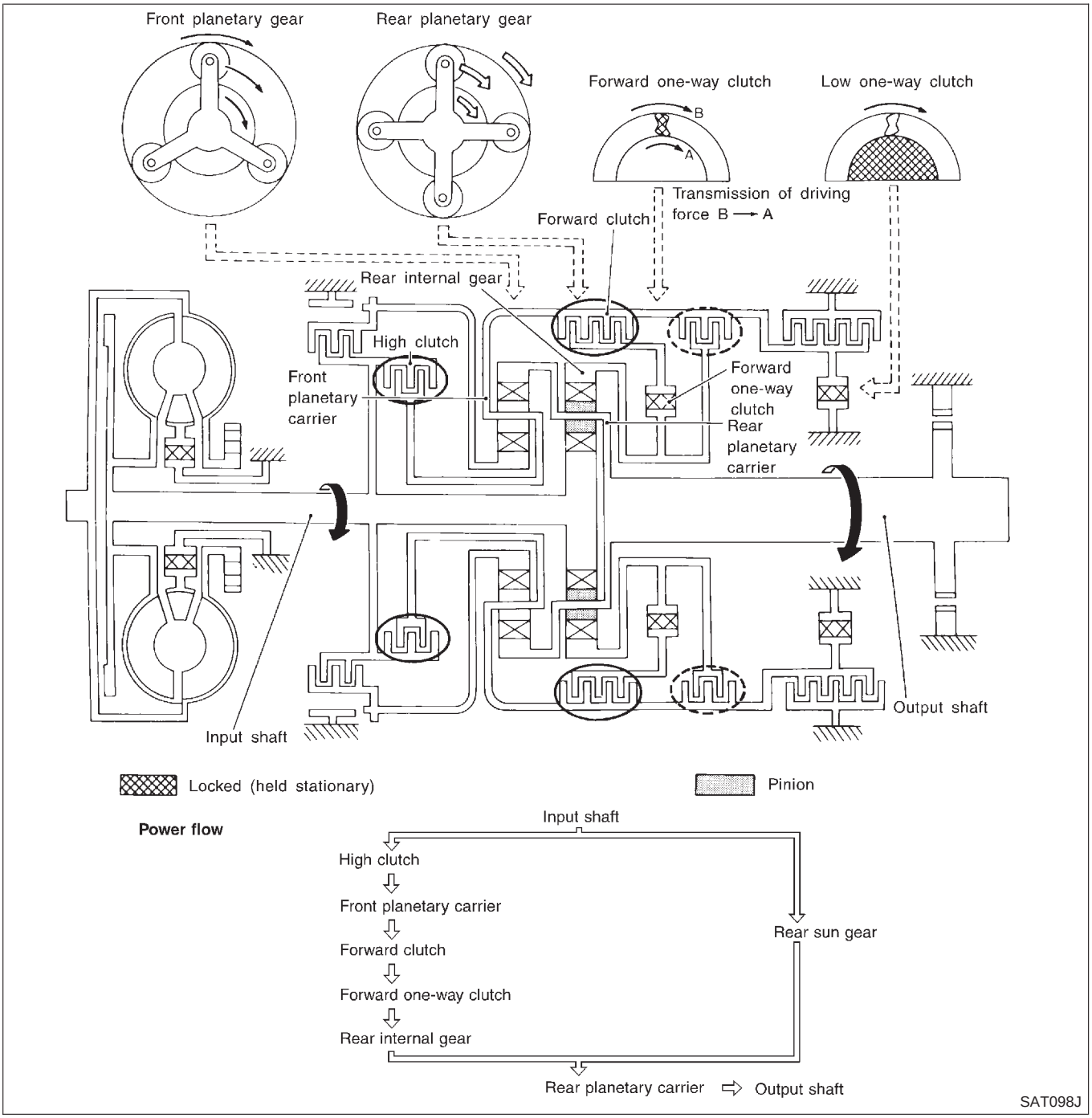

"D_4" (OD) Position

=NBAT0012S0405

High clutch **Brake band** **Forward clutch** (Does not affect power transmission)	Input power is transmitted to front carrier through high clutch. This front planetary carrier turns around the sun gear which is fixed by brake band and makes front internal gear (output) turn faster.
Engine brake	At D_4 position, there is no one-way clutch in the power transmission line and engine brake can be obtained when decelerating.

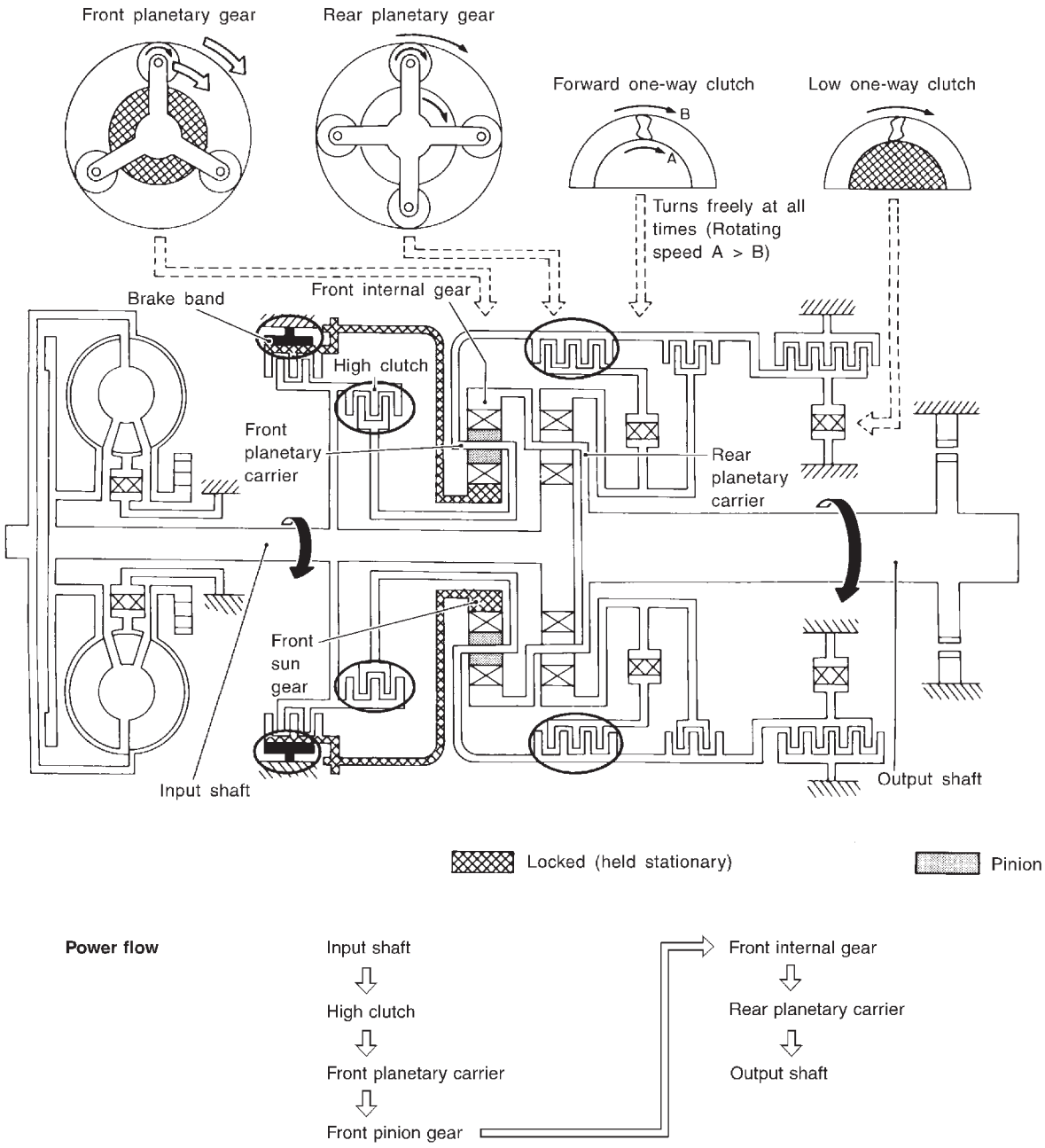

SAT099J

"R" Position

=NBAT0012S0407

Reverse clutch **Low and reverse brake**	Front planetary carrier is stationary because of the operation of low and reverse brake. Input power is transmitted to front sun gear through reverse clutch, which drives front internal gear in the opposite direction.
Engine brake	As there is no one-way clutch in the power transmission line, engine brake can be obtained when decelerating.

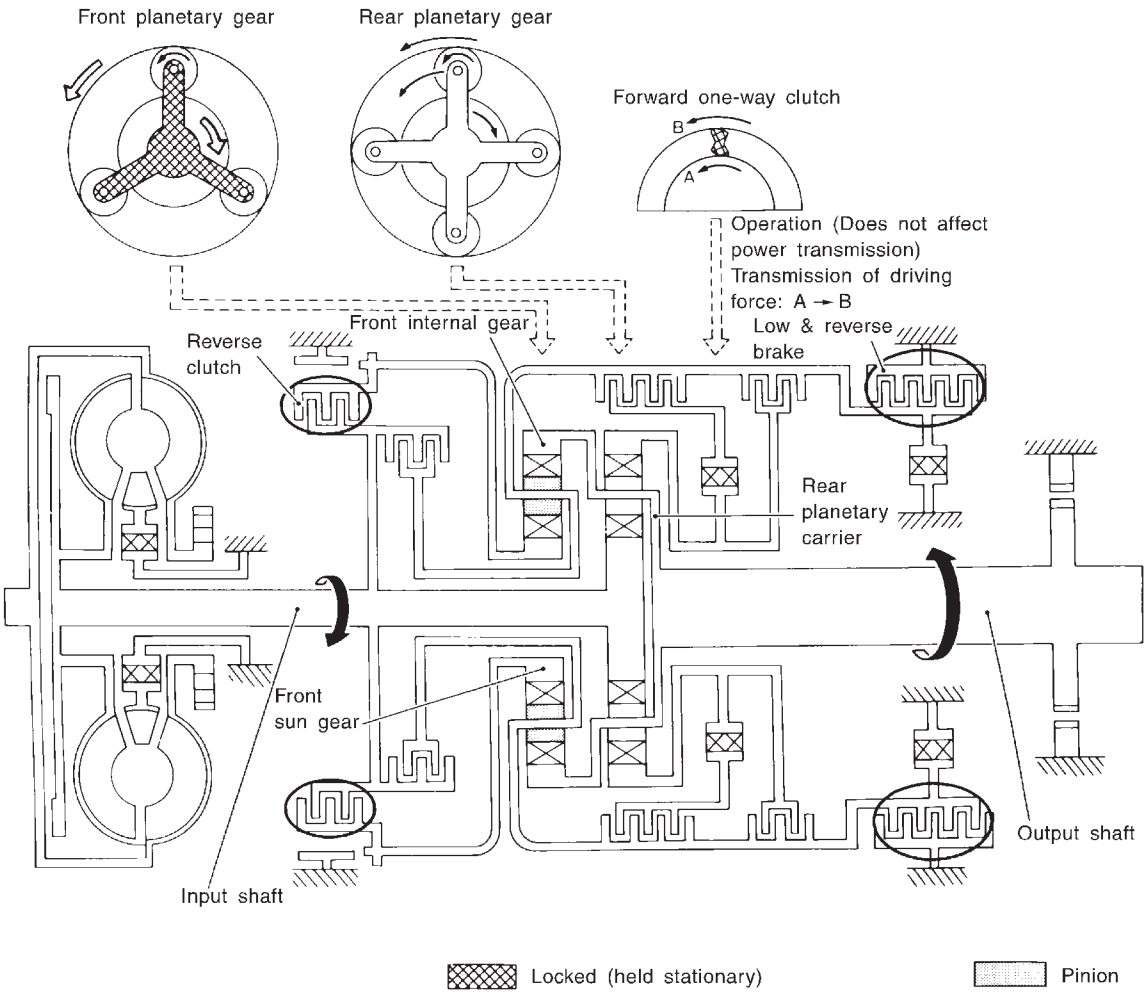

Power flow

Input shaft
⇩
Reverse clutch
⇩
Front pinion gear ⇦ Front sun gear
⇩
Front internal gear ⇨ Output shaft

SAT101J

Control System

=NBAT0013

OUTLINE

NBAT0013S01

The automatic transmission senses vehicle operating conditions through various sensors. It always controls the optimum shift position and reduces shifting and lock-up shocks.

SENSORS		TCM		ACTUATORS
PNP switch Throttle position sensor Closed throttle position switch Wide open throttle position switch Engine speed signal A/T fluid temperature sensor Revolution sensor Vehicle speed sensor Overdrive control switch ASCD control unit	▶	Shift control Line pressure control Lock-up control Overrun clutch control Timing control Fail-safe control Self-diagnosis CONSULT communication line Duet-EU control	▶	Shift solenoid valve A Shift solenoid valve B Overrun clutch solenoid valve Torque converter clutch sole-noid valve Line pressure solenoid valve O/D OFF indicator lamp

CONTROL SYSTEM

NBAT0013S02

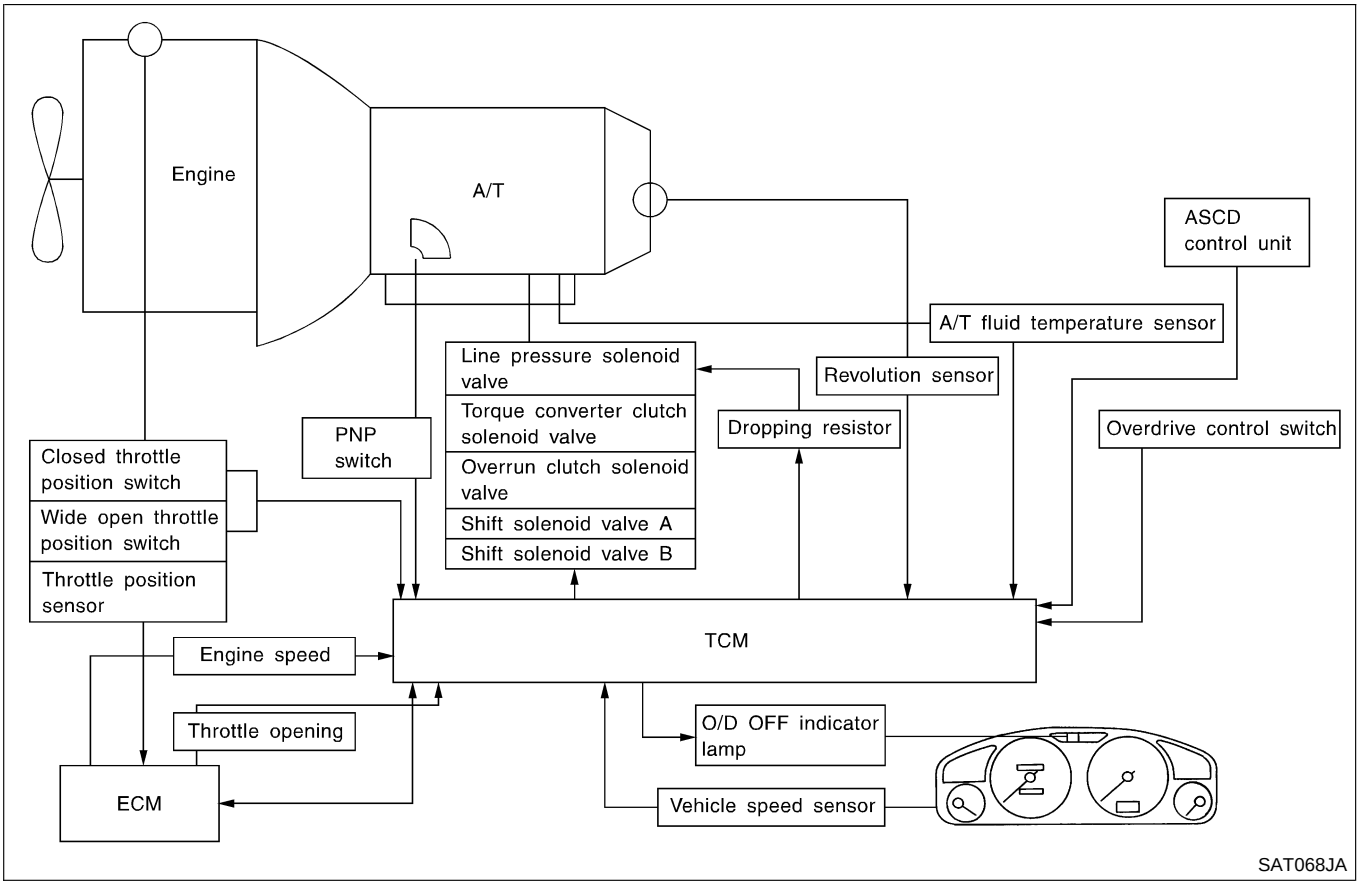

TCM FUNCTION

=NBAT0013S03

The function of the TCM is to:

- Receive input signals sent from various switches and sensors.
- Determine required line pressure, shifting point, lock-up operation, and engine brake operation.
- Send required output signals to the respective solenoids.

INPUT/OUTPUT SIGNAL OF TCM

NBAT0013S04

	Sensors and solenoid valves	Function
Input	PNP switch	Detects select lever position and sends a signal to TCM.
	Throttle position sensor	Detects throttle valve position and sends a signal to TCM.
	Closed throttle position switch	Detects throttle valve's fully-closed position and sends a signal to TCM.
	Wide open throttle position switch	Detects a throttle valve position of greater than 1/2 of full throttle and sends a signal to TCM.
	Engine speed signal	From ECM.
	A/T fluid temperature sensor	Detects transmission fluid temperature and sends a signal to TCM.
	Revolution sensor	Detects output shaft rpm and sends a signal to TCM.
	Vehicle speed sensor	Used as an auxiliary vehicle speed sensor. Sends a signal when revolution sensor (installed on transmission) malfunctions.
	Overdrive control switch	Sends a signal, which prohibits a shift to "D_4" (overdrive) position, to the TCM.
	ASCD control unit	Sends the cruise signal and "D_4" (overdrive) cancellation signal from ASCD control unit to TCM.
Output	Shift solenoid valve A/B	Selects shifting point suited to driving conditions in relation to a signal sent from TCM.
	Line pressure solenoid valve	Regulates (or decreases) line pressure suited to driving conditions in relation to a signal sent from TCM.
	Torque converter clutch solenoid valve	Regulates (or decreases) lock-up pressure suited to driving conditions in relation to a signal sent from TCM.
	Overrun clutch solenoid valve	Controls an "engine brake" effect suited to driving conditions in relation to a signal sent from TCM.
	O/D OFF indicator lamp	Shows TCM faults, when A/T control components malfunction.

Control Mechanism

NBAT0180

LINE PRESSURE CONTROL

NBAT0180S01

TCM has the various line pressure control characteristics to meet the driving conditions.

An ON-OFF duty signal is sent to the line pressure solenoid valve based on TCM characteristics.

Hydraulic pressure on the clutch and brake is electronically controlled through the line pressure solenoid valve to accommodate engine torque. This results in smooth shift operation.

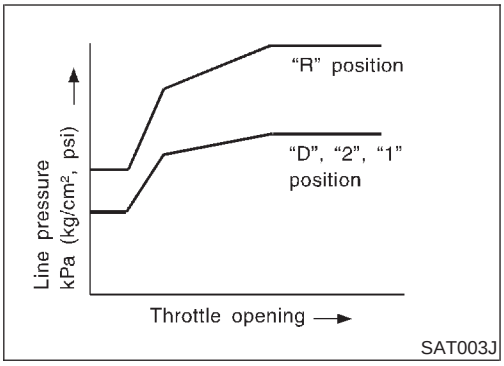

Normal Control

NBAT0180S0101

The line pressure to throttle opening characteristics is set for suitable clutch operation.

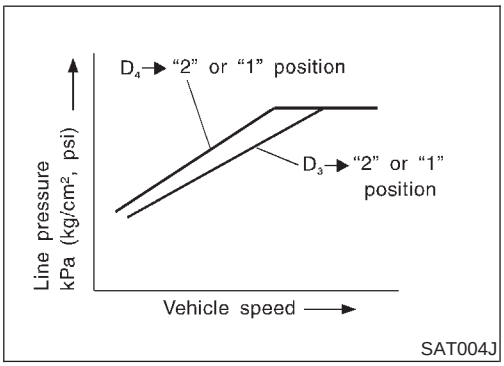

Back-up Control (Engine brake)

NBAT0180S0102

If the selector lever is shifted to "2" position while driving in D_4 (OD) or D_3, great driving force is applied to the clutch inside the transmission. Clutch operating pressure (line pressure) must be increased to deal with this driving force.

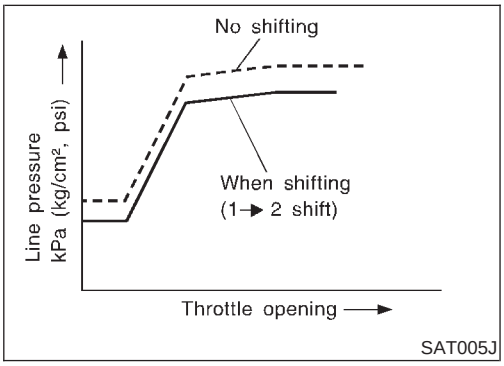

During Shift Change

NBAT0180S0103

The line pressure is temporarily reduced corresponding to a change in engine torque when shifting gears (that is, when the shift solenoid valve is switched for clutch operation) to reduce shifting shock.

At Low Fluid Temperature

NBAT0180S0104

- Fluid viscosity and frictional characteristics of the clutch facing change with fluid temperature. Clutch engaging or band-contacting pressure is compensated for, according to fluid temperature, to stabilize shifting quality.

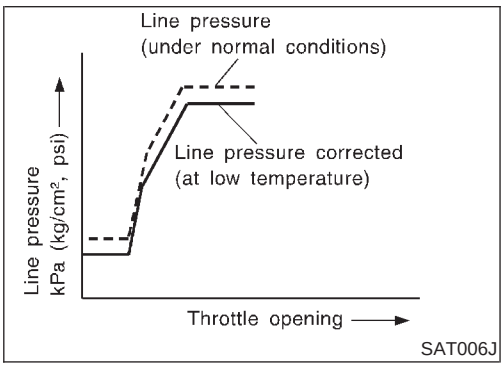

- The line pressure is reduced below 60°C (140°F) to prevent shifting shock due to low viscosity of automatic transmission fluid when temperature is low.

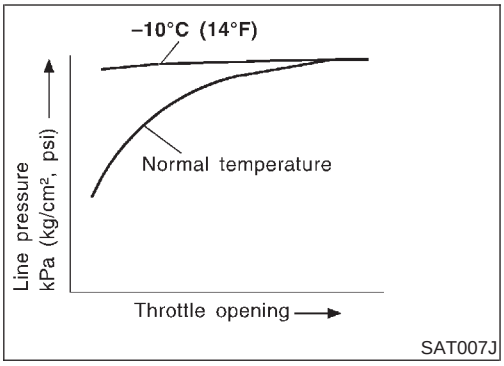

- Line pressure is increased to a maximum irrespective of the throttle opening when fluid temperature drops to −10°C (14°F). This pressure rise is adopted to prevent a delay in clutch and brake operation due to extreme drop of fluid viscosity at low temperature.

SHIFT CONTROL

NBAT0180S02

The shift is regulated entirely by electronic control to accommodate vehicle speed and varying engine operations. This is accomplished by electrical signals transmitted by the revolution sensor and throttle position sensor. This results in improved acceleration performance and fuel economy.

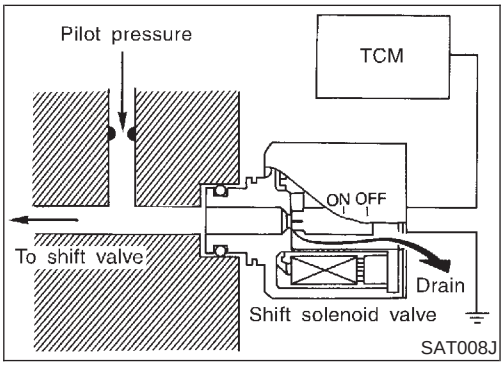

Control of Shift Solenoid Valves A and B

NBAT0180S0201

The TCM activates shift solenoid valves A and B according to signals from the throttle position sensor and revolution sensor to select the optimum gear position on the basis of the shift schedule memorized in the TCM.

The shift solenoid valve performs simple ON-OFF operation. When set to "ON", the drain circuit closes and pilot pressure is applied to the shift valve.

[Relation between shift solenoid valves A and B and gear positions]

Shift solenoid valve	Gear position				
	D_1, 2_1, 1_1	D_2, 2_2, 1_2	D_3	D_4 (OD)	N-P
A	ON (Closed)	OFF (Open)	OFF (Open)	ON (Closed)	ON (Closed)
B	ON (Closed)	ON (Closed)	OFF (Open)	OFF (Open)	ON (Closed)

Control of Shift Valves A and B

NBAT0180S0202

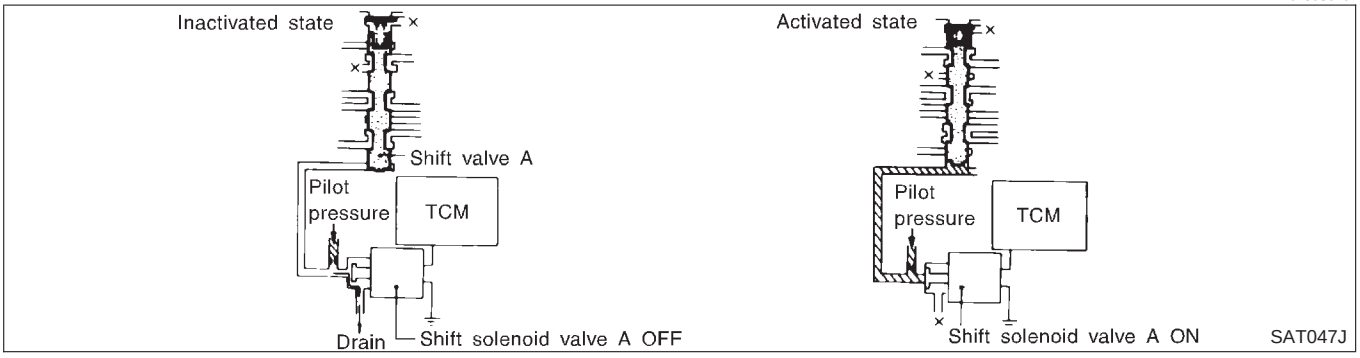

Pilot pressure generated by the operation of shift solenoid valves A and B is applied to the end face of shift valves A and B.
The drawing above shows the operation of shift valve B. When the shift solenoid valve is "ON", pilot pressure applied to the end face of the shift valve overcomes spring force, moving the valve upward.

LOCK-UP CONTROL

NBAT0180S03

The torque converter clutch piston in the torque converter is locked to eliminate torque converter slip to increase power transmission efficiency. The solenoid valve is controlled by an ON-OFF duty signal sent from the TCM. The signal is converted to oil pressure signal which controls the torque converter clutch piston.

Conditions for Lock-up Operation

NBAT0180S0301

When vehicle is driven in 4th gear position, vehicle speed and throttle opening are detected. If the detected values fall within the lock-up zone memorized in the TCM, lock-up is performed.

Overdrive control switch	ON	OFF
Selector lever	"D" position	
Gear position	D_4	D_3
Vehicle speed sensor	More than set value	
Throttle position sensor	Less than set opening	
Closed throttle position switch	OFF	
A/T fluid temperature sensor	More than 40°C (104°F)	

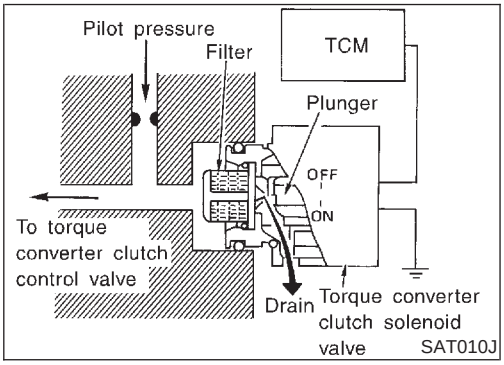

Torque Converter Clutch Solenoid Valve Control

NBAT0180S0302

The torque converter clutch solenoid valve is controlled by the TCM. The plunger closes the drain circuit during the "OFF" period, and opens the circuit during the "ON" period. If the percentage of OFF-time increases in one cycle, the pilot pressure drain time is reduced and pilot pressure remains high.
The torque converter clutch piston is designed to slip to adjust the ratio of ON-OFF, thereby reducing lock-up shock.

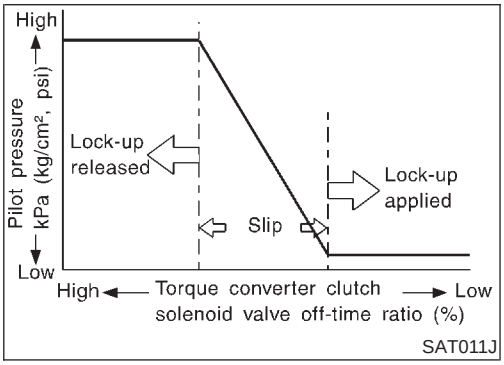

OFF-time INCREASING
↓
Amount of drain DECREASING
↓
Pilot pressure HIGH
↓
Lock-up RELEASING

Torque Converter Clutch Control Valve Operation

NBAT0180S0303

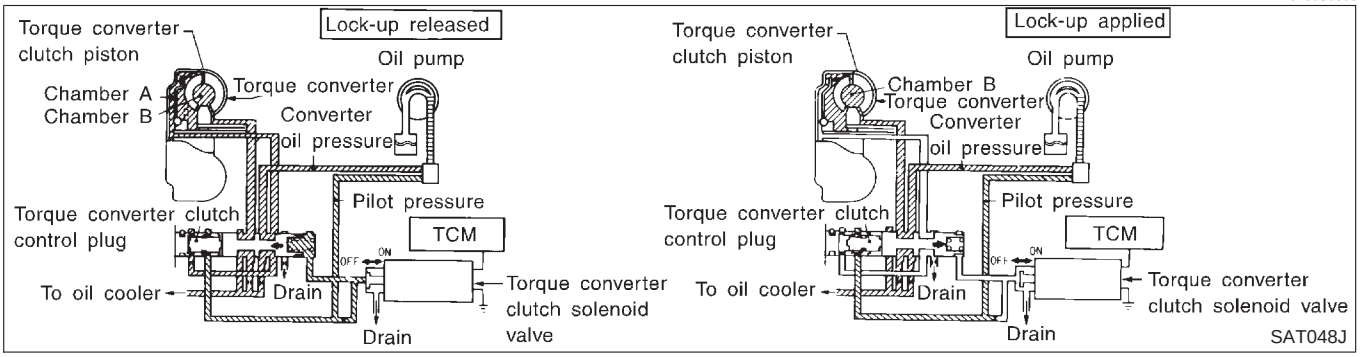

Lock-up Released

The OFF-duration of the torque converter clutch solenoid valve is long, and pilot pressure is high. The pilot pressure pushes the end face of the torque converter clutch control valve in combination with spring force to move the valve to the left. As a result, converter pressure is applied to chamber A (torque converter clutch piston release side). Accordingly, the torque converter clutch piston remains unlocked.

Lock-up Applied

When the OFF-duration of the torque converter clutch solenoid valve is short, pilot pressure drains and becomes low. Accordingly, the control valve moves to the right by the pilot pressure of the other circuit and converter pressure. As a result, converter pressure is applied to chamber B, keeping the torque converter clutch piston applied.

Also smooth lock-up is provided by transient application and release of the lock-up.

OVERRUN CLUTCH CONTROL (ENGINE BRAKE CONTROL)

NBAT0180S04

Forward one-way clutch is used to reduce shifting shocks in down-shifting operations. This clutch transmits engine torque to the wheels. However, drive force from the wheels is not transmitted to the engine because the one-way clutch rotates idle. This means the engine brake is not effective.

The overrun clutch operates when the engine brake is needed.

Overrun Clutch Operating Conditions

NBAT0180S0401

	Gear position	Throttle opening
"D" position	D_1, D_2, D_3 gear position	Less than 3/16
"2" position	2_1, 2_2 gear position	
"1" position	1_1, 1_2 gear position	At any position

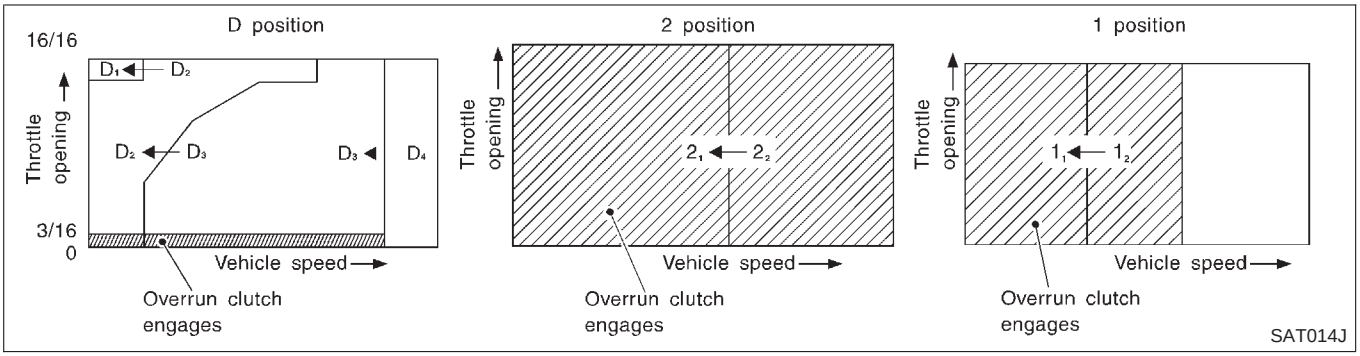

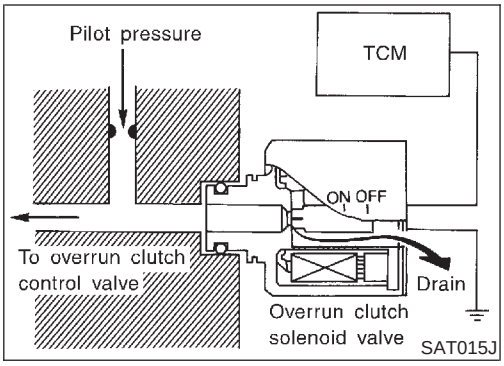

Overrun Clutch Solenoid Valve Control

NBAT0180S0402

The overrun clutch solenoid valve is operated by an ON-OFF signal transmitted by the TCM to provide overrun clutch control (engine brake control).

When this solenoid valve is "ON", the pilot pressure drain port closes. When it is "OFF", the drain port opens.

During the solenoid valve "ON" pilot pressure is applied to the end face of the overrun clutch control valve.

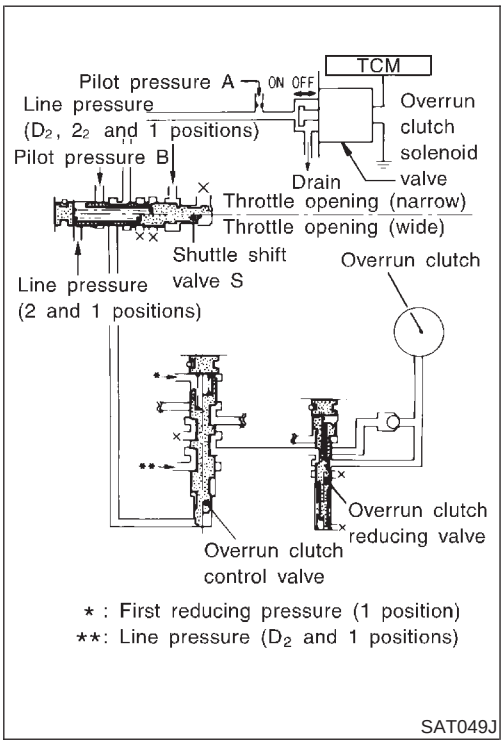

Overrun Clutch Control Valve Operation

NBAT0180S0403

When the solenoid valve is "ON", pilot pressure A is applied to the overrun clutch control valve. This pushes up the overrun clutch control valve. The line pressure is then shut off so that the clutch does not engage.

When the solenoid valve is "OFF", pilot pressure A is not generated. At this point, the overrun clutch control valve moves downward by spring force. As a result, overrun clutch operation pressure is provided by the overrun clutch reducing valve. This causes the overrun clutch to engage.

In the "1" position, the overrun clutch control valve remains pushed down so that the overrun clutch is engaged at all times.

Control Valve

NBAT0181

FUNCTION OF CONTROL VALVE

NBAT0181S01

Valve name	Function
• Pressure regulator valve • Pressure regulator plug • Pressure regulator sleeve plug	Regulate oil discharged from the oil pump to provide optimum line pressure for all driving conditions.
Pressure modifier valve	Used as a signal supplementary valve to the pressure regulator valve. Regulates pressure-modifier pressure (signal pressure) which controls optimum line pressure for all driving conditions.
Modifier accumulator piston	Smooths hydraulic pressure regulated by the pressure modifier valve to prevent pulsations.
Pilot valve	Regulates line pressure to maintain a constant pilot pressure level which controls lock-up mechanism, overrun clutch, 3-2 timing required for shifting.
Accumulator control valve Accumulator control sleeve	Regulate accumulator backpressure to pressure suited to driving conditions.
Manual valve	Directs line pressure to oil circuits corresponding to select positions. Hydraulic pressure drains when the shift lever is in Neutral.

Control Valve (Cont'd)

Valve name	Function
Shift valve A	Simultaneously switches three oil circuits using output pressure of shift solenoid valve A to meet driving conditions (vehicle speed, throttle opening, etc.). Provides automatic downshifting and up-shifting (1st → 2nd → 3rd → 4th gears/4th → 3rd → 2nd → 1st gears) in combination with shift valve B.
Shift valve B	Simultaneously switches three oil circuits using output pressure of shift solenoid valve B in relation to driving conditions (vehicle speed, throttle opening, etc.). Provides automatic downshifting and up-shifting (1st → 2nd → 3rd → 4th gears/4th → 3rd → 2nd → 1st gears) in combination with shift valve A.
Shuttle shift valve S	Switches hydraulic circuits to provide 3-2 timing control and overrun clutch control in relation to the throttle opening. Inactivates the overrun clutch to prevent interlocking in 4th gear when the throttle is wide open.
Overrun clutch control valve	Switches hydraulic circuits to prevent engagement of the overrun clutch simultaneously with application of the brake band in 4th gear. (Interlocking occurs if the overrun clutch engages during D_4 gear operation.)
4-2 relay valve	Memorizes that the transmission is in 4th gear. Prevents the transmission from downshifting from 4th gear to 3rd and then to 2nd in combination with 4-2 sequence valve and shift valves A and B when downshifting from 4th to 2nd gear.
4-2 sequence valve	Prevents band servo pressure from draining before high clutch operating pressure and band servo releasing pressure drain (from the same circuit) during downshifting from 4th to 2nd gear.
Servo charger valve	An accumulator and a one-way orifice are used in the 2nd gear band servo oil circuit to dampen shifting shock when shifting from 1st to 2nd gear. To maintain adequate flowrate when downshifting from 4th or 3rd gear to 2nd gear, the servo charger valve directs 2nd gear band servo hydraulic pressure to the circuit without going through the one-way orifice when downshifting from 3rd or a higher gear.
3-2 timing valve	Prevents a late operation of the brake band when shifting selector lever from "D" to "1" or "2" position while driving in D_3.
"1" reducing valve	Reduces low & reverse brake pressure to dampen engine-brake shock when downshifting from the "1" position 2nd gear to 1st gear.
Overrun clutch reducing valve	Reduces oil pressure directed to the overrun clutch and prevents engine-brake shock. In "1" and "2" positions, line pressure acts on the overrun clutch reducing valve to increase the pressure-regulating point, with resultant engine brake capability.
Torque converter relief valve	Prevents an excessive rise in torque converter pressure.
Torque converter clutch control valve, torque converter clutch control plug and torque converter clutch control sleeve	Activate or inactivate the lock-up function. Also provide smooth lock-up through transient application and release of the lock-up system.
Shuttle shift valve D	Switches hydraulic circuits so that output pressure of the torque converter clutch solenoid valve acts on the lock-up valve in the "D" position of 2nd, 3rd and 4th gears. (In the "D" position 1st gear, lock-up is inhibited.) ● Lock-up control is not affected in "D" position 2nd, 3rd or 4th gears, unless output pressure of the torque converter clutch solenoid valve is generated by a signal from the control unit.

Introduction

NBAT0014

The A/T system has two self-diagnostic systems.
The first is the emission-related on board diagnostic system (OBD-II) performed by the TCM in combination with the ECM. The malfunction is indicated by the MIL (malfunction indicator lamp) and is stored as a DTC in the ECM memory but not the TCM memory.
The second is the TCM original self-diagnosis indicated by the O/D OFF indicator lamp. The malfunction is stored in the TCM memory. The detected items are overlapped with OBD-II self-diagnostic items. For detail, refer to AT-50.

OBD-II Function for A/T System

NBAT0182

The ECM provides emission-related on board diagnostic (OBD-II) functions for the A/T system. One function is to receive a signal from the TCM used with OBD-related parts of the A/T system. The signal is sent to the ECM when a malfunction occurs in the corresponding OBD-related part. The other function is to indicate a diagnostic result by means of the MIL (malfunction indicator lamp) on the instrument panel. Sensors, switches and solenoid valves are used as sensing elements.
The MIL automatically illuminates in One or Two Trip Detection Logic when a malfunction is sensed in relation to A/T system parts.

One or Two Trip Detection Logic of OBD-II

NBAT0015

ONE TRIP DETECTION LOGIC

NBAT0015S01

If a malfunction is sensed during the first test drive, the MIL will illuminate and the malfunction will be stored in the ECM memory as a DTC. The TCM is not provided with such a memory function.

TWO TRIP DETECTION LOGIC

NBAT0015S02

When a malfunction is sensed during the first test drive, it is stored in the ECM memory as a 1st trip DTC (diagnostic trouble code) or 1st trip freeze frame data. At this point, the MIL will not illuminate. — First Trip
If the same malfunction as that experienced during the first test drive is sensed during the second test drive, the MIL will illuminate. — Second Trip
A/T-related parts for which the MIL illuminates during the first or second test drive are listed below.

Items	MIL	
	One trip detection	Two trip detection
Shift solenoid valve A — DTC: P0750 (1108)	X	
Shift solenoid valve B — DTC: P0755 (1201)	X	
Throttle position sensor or switch — DTC: P1705 (1206)	X	
Except above		X

The “trip” in the “One or Two Trip Detection Logic” means a driving mode in which self-diagnosis is performed during vehicle operation.

OBD-II Diagnostic Trouble Code (DTC)

NBAT0016

HOW TO READ DTC AND 1ST TRIP DTC

NBAT0016S01

DTC and 1st trip DTC can be read by the following methods.

1. **(NO TOOLS No Tools)** The number of blinks of the malfunction indicator lamp in the Diagnostic Test Mode II (Self-Diagnostic Results) Examples: 1101, 1102, 1103, 1104, etc. For details, refer to EC-70, “DESCRIPTION”.
   These DTCs are controlled by NISSAN.
2. **(with CONSULT or GST GST)** CONSULT or GST (Generic Scan Tool) Examples: P0705, P0710, P0720, P0725, etc.
   These DTCs are prescribed by SAE J2012.
   (CONSULT also displays the malfunctioning component or system.)

- **1st trip DTC No. is the same as DTC No.**
- **Output of the diagnostic trouble code indicates that the indicated circuit has a malfunction. However, in case of the Mode II and GST they do not indicate whether the malfunction is still occurring or occurred in the past and returned to normal.**
  CONSULT can identify them as shown below. Therefore, using CONSULT (if available) is recommended.

A sample of CONSULT display for DTC is shown at left. DTC or 1st trip DTC of a malfunction is displayed in SELF-DIAGNOSTIC RESULTS mode for "ENGINE" with CONSULT. Time data indicates how many times the vehicle was driven after the last detection of a DTC.

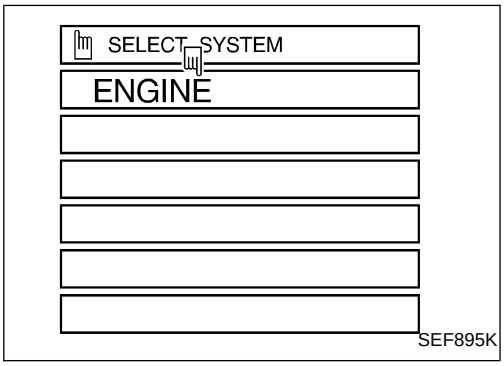

If the DTC is being detected currently, the time data will be "0".

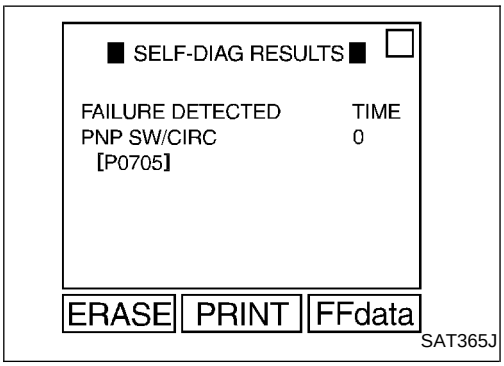

If a 1st trip DTC is stored in the ECM, the time data will be "[1t]".

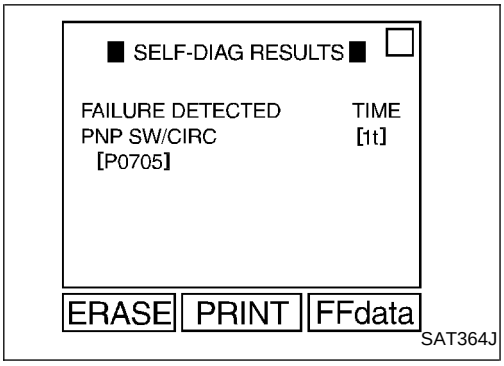

Freeze Frame Data and 1st Trip Freeze Frame Data

NBAT0016S0101

The ECM has a memory function, which stores the driving condition such as fuel system status, calculated load value, engine coolant temperature, short term fuel trim, long term fuel trim, engine speed and vehicle speed at the moment the ECM detects a malfunction.

Data which are stored in the ECM memory, along with the 1st trip DTC, are called 1st trip freeze frame data, and the data, stored together with the DTC data, are called freeze frame data and displayed on CONSULT or GST. The 1st trip freeze frame data can only be displayed on the CONSULT screen, not on the GST. For detail, refer to EC-80, "CONSULT".

Only one set of freeze frame data (either 1st trip freeze frame data of freeze frame data) can be stored in the ECM. 1st trip freeze frame data is stored in the ECM memory along with the 1st trip DTC. There is no priority for 1st trip freeze frame data and it is updated each time a different 1st trip DTC is detected. However, once freeze frame data (2nd trip detection/MIL on) is stored in the ECM memory, 1st trip freeze frame data is no longer stored. Remember, only one set of freeze frame data can be stored in the ECM. The ECM has the following priorities to update the data.

Priority	Items	
1	Freeze frame data	Misfire — DTC: P0300 - P0306 (0701, 0603 - 0608) Fuel Injection System Function — DTC: P0171 (0115), P0172 (0114), P0174 (0209), P0175 (0210)
2		Except the above items (Includes A/T related items)
3	1st trip freeze frame data	

Both 1st trip freeze frame data and freeze frame data (along with the DTCs) are cleared when the ECM memory is erased.

HOW TO ERASE DTC

NBAT0016S02

The diagnostic trouble code can be erased by CONSULT, GST or ECM DIAGNOSTIC TEST MODE as described following.

- **If the battery terminal is disconnected, the diagnostic trouble code will be lost within 24 hours.**
- **When you erase the DTC, using CONSULT or GST is easier and quicker than switching the mode selector on the ECM.**

The following emission-related diagnostic information is cleared from the ECM memory when erasing DTC related to OBD-II. For details, refer to EC-55, "Emission-related Diagnostic Information".

- **Diagnostic trouble codes (DTC)**
- **1st trip diagnostic trouble codes (1st trip DTC)**
- **Freeze frame data**
- **1st trip freeze frame data**
- **System readiness test (SRT) codes**
- **Test values**

HOW TO ERASE DTC (WITH CONSULT)

NBAT0016S03

- **If a DTC is displayed for both ECM and TCM, it needs to be erased for both ECM and TCM.**

1. If the ignition switch stays "ON" after repair work, be sure to turn ignition switch "OFF" once. Wait at least 5 seconds and then turn it "ON" (engine stopped) again.
2. Turn CONSULT "ON" and touch "A/T".
3. Touch "SELF-DIAG RESULTS".
4. Touch "ERASE". (The DTC in the TCM will be erased.) Then touch "BACK" twice.
5. Touch "ENGINE".
6. Touch "SELF-DIAG RESULTS".
7. Touch "ERASE". (The DTC in the ECM will be erased.)

How to erase DTC (With CONSULT)

1. If the ignition switch stays "ON" after repair work, be sure to turn ignition switch "OFF" once. Wait at least 5 seconds and then turn it "ON" (engine stopped) again.

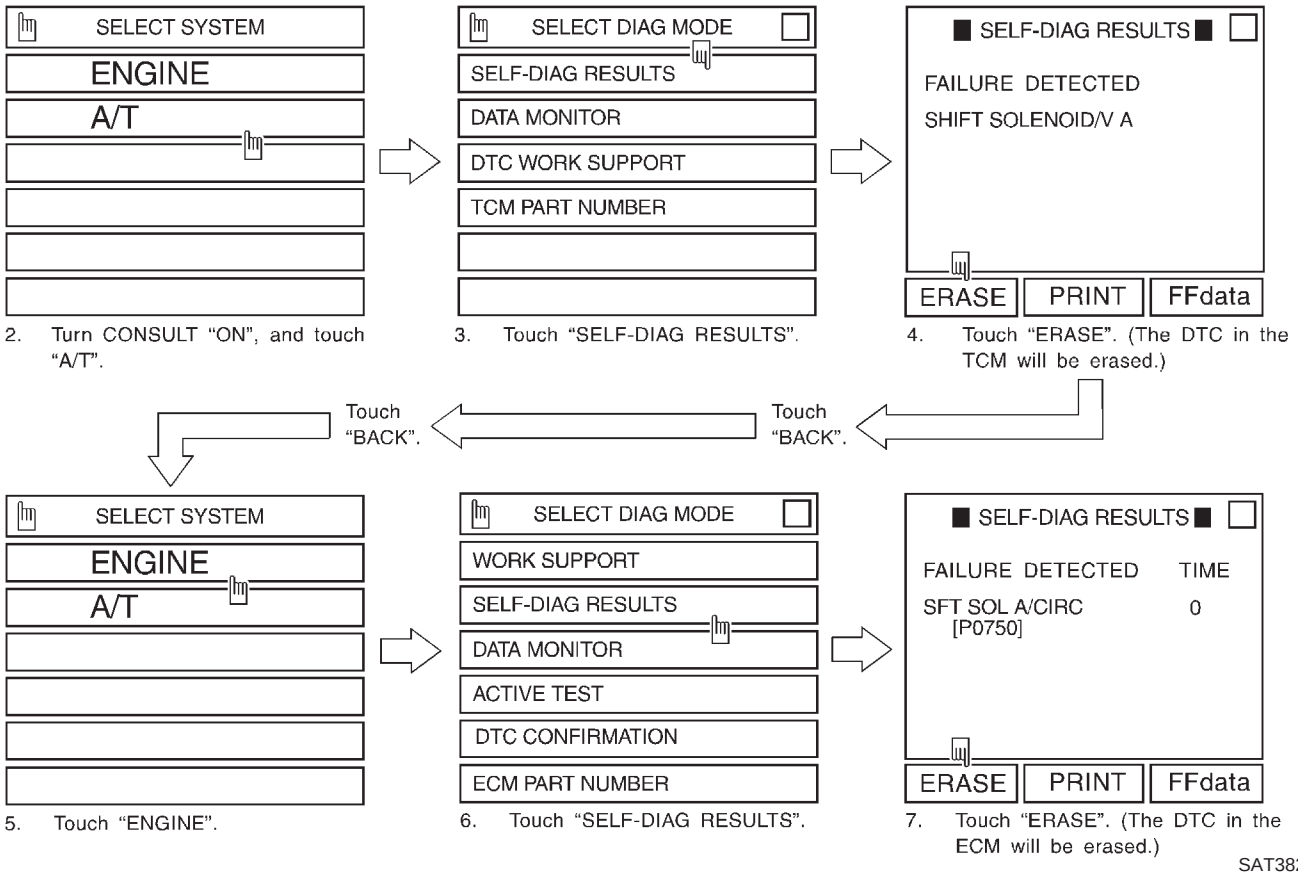

2. Turn CONSULT "ON", and touch "A/T".
3. Touch "SELF-DIAG RESULTS".
4. Touch "ERASE". (The DTC in the TCM will be erased.)
5. Touch "ENGINE".
6. Touch "SELF-DIAG RESULTS".
7. Touch "ERASE". (The DTC in the ECM will be erased.)

HOW TO ERASE DTC (WITH GST)

NBAT0016S04

1. If the ignition switch stays "ON" after repair work, be sure to turn ignition switch "OFF" once. Wait at least 5 seconds and then turn it "ON" (engine stopped) again.
2. Perform "OBD-II SELF-DIAGNOSTIC PROCEDURE (No Tools)". Refer to AT-46. (The engine warm-up step can be skipped when performing the diagnosis only to erase the DTC.)
3. Select Mode 4 with Generic Scan Tool (GST). For details, refer to EC-93, "DESCRIPTION".

HOW TO ERASE DTC (NO TOOLS)

NBAT0016S05

1. If the ignition switch stays "ON" after repair work, be sure to turn ignition switch "OFF" once. Wait at least 5 seconds and then turn it "ON" (engine stopped) again.
2. Perform "TCM SELF-DIAGNOSTIC PROCEDURE (No Tools)". Refer to AT-46. (The engine warm-up step can be skipped when performing the diagnosis only to erase the DTC.)
3. Change the diagnostic test mode from Mode II to Mode I by turning the mode selector on the ECM. Refer to EC-72, "How to Switch Diagnostic Test Modes".

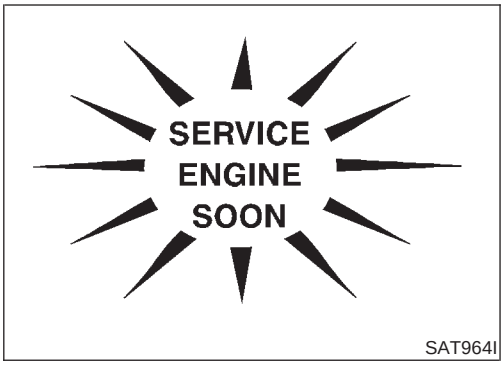

Malfunction Indicator Lamp (MIL)

=NBAT0183

1. The malfunction indicator lamp will light up when the ignition switch is turned ON without the engine running. This is for checking the blown lamp.
   - If the malfunction indicator lamp does not light up, refer to EL-100, “Schematic”.
     (Or see MIL & Data Link Connectors in EC-582.)
2. When the engine is started, the malfunction indicator lamp should go off.
   If the lamp remains on, the on board diagnostic system has detected an emission-related (OBD-II) malfunction. For detail, refer to EC-54, “Introduction”.

CONSULT

NBAT0184

After performing “SELF-DIAGNOSTIC PROCEDURE (WITH CONSULT)” (AT-38), place check marks for results on the “DIAGNOSTIC WORKSHEET”, AT-55. Reference pages are provided following the items.

NOTICE:

1) The CONSULT electrically displays shift timing and lock-up timing (that is, operation timing of each solenoid).
   Check for time difference between actual shift timing and the CONSULT display. If the difference is noticeable, mechanical parts (except solenoids, sensors, etc.) may be malfunctioning. Check mechanical parts using applicable diagnostic procedures.
2) Shift schedule (which implies gear position) displayed on CONSULT and that indicated in Service Manual may differ slightly. This occurs because of the following reasons:
   - Actual shift schedule has more or less tolerance or allowance,
   - Shift schedule indicated in Service Manual refers to the point where shifts start, and
   - Gear position displayed on CONSULT indicates the point where shifts are completed.
3) Shift solenoid valve “A” or “B” is displayed on CONSULT at the start of shifting. Gear position is displayed upon completion of shifting (which is computed by TCM).
4) Additional CONSULT information can be found in the Operation Manual supplied with the CONSULT unit.

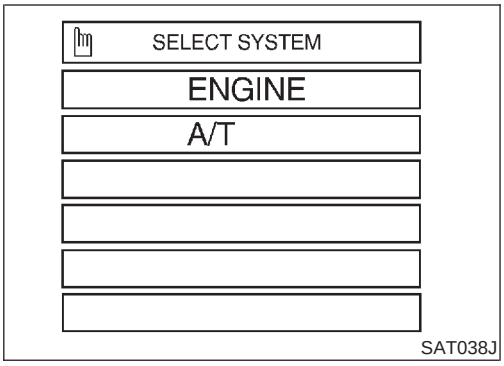

SELF-DIAGNOSTIC PROCEDURE (WITH CONSULT)

NBAT0184S01

1. Turn on CONSULT and touch "ENGINE" for OBD-II detected items or touch "A/T" for TCM self-diagnosis.
   If A/T is not displayed, check TCM power supply and ground circuit. Refer to AT-92. If result is NG, refer to EL-9, "Schematic".

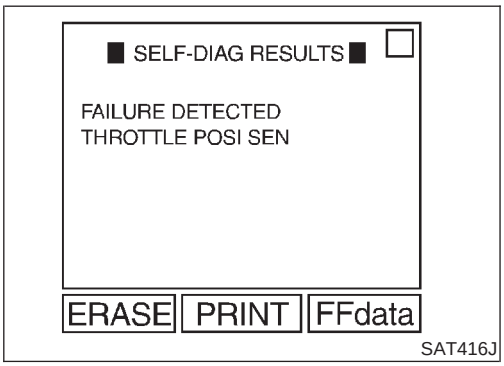

2. Touch "SELF-DIAG RESULTS".
   Display shows malfunction experienced since the last erasing operation.
   CONSULT performs REAL-TIME SELF-DIAGNOSIS.
   Also, any malfunction detected while in this mode will be displayed at real time.

SELF-DIAGNOSTIC RESULT TEST MODE

NBAT0184S02

Detected items (Screen terms for CONSULT, "SELF-DIAG RESULTS" test mode)		Malfunction is detected when ...	TCM self-diagnosis	OBD-II (DTC)
"A/T"	"ENGINE"		O/D OFF Available by O/D OFF indicator lamp or "A/T" on CONSULT	SERVICE ENGINE SOON Available by malfunction indicator lamp*2, "ENGINE" on CONSULT or GST
PNP switch circuit		• TCM does not receive the correct voltage signal (based on the gear position) from the switch.	—	P0705
—	PNP SW/CIRC			
Revolution sensor		• TCM does not receive the proper voltage signal from the sensor.	X	P0720
VHCL SPEED SEN·A/T	VEH SPD SEN/CIR AT			
Vehicle speed sensor (Meter)		• TCM does not receive the proper voltage signal from the sensor.	X	—
VHCL SPEED SEN·MTR	—			
A/T 1st gear function		• A/T cannot be shifted to the 1st gear position even if electrical circuit is good.	—	P0731*1
—	A/T 1ST GR FNCTN			
A/T 2nd gear function		• A/T cannot be shifted to the 2nd gear position even if electrical circuit is good.	—	P0732*1
—	A/T 2ND GR FNCTN			
A/T 3rd gear function		• A/T cannot be shifted to the 3rd gear position even if electrical circuit is good.	—	P0733*1
—	A/T 3RD GR FNCTN			
A/T 4th gear function		• A/T cannot be shifted to the 4th gear position even if electrical circuit is good.	—	P0734*1
—	A/T 4TH GR FNCTN			

Detected items (Screen terms for CONSULT, "SELF-DIAG RESULTS" test mode)		Malfunction is detected when ...	TCM self-diagnosis	OBD-II (DTC)
"A/T"	"ENGINE"		O/D OFF Available by O/D OFF indicator lamp or "A/T" on CONSULT	SERVICE ENGINE SOON Available by malfunction indicator lamp*2, "ENGINE" on CONSULT or GST
A/T TCC S/V function (lock-up)		• A/T cannot perform lock-up even if electrical circuit is good.	—	P0744*1
—	A/T TCC S/V FNCTN			
Shift solenoid valve A		• TCM detects an improper voltage drop when it tries to operate the solenoid valve.	X	P0750
SHIFT SOLENOID/V A	SFT SOL A/CIRC			
Shift solenoid valve B		• TCM detects an improper voltage drop when it tries to operate the solenoid valve.	X	P0755
SHIFT SOLENOID/V B	SFT SOL B/CIRC			
Overrun clutch solenoid valve		• TCM detects an improper voltage drop when it tries to operate the solenoid valve.	X	P1760
OVERRUN CLUTCH S/V	O/R CLUCH SOL/ CIRC			
T/C clutch solenoid valve		• TCM detects an improper voltage drop when it tries to operate the solenoid valve.	X	P0740
T/C CLUTCH SOL/V	TCC SOLENOID/ CIRC			
Line pressure solenoid valve		• TCM detects an improper voltage drop when it tries to operate the solenoid valve.	X	P0745
LINE PRESSURE S/V	L/PRESS SOL/CIRC			
Throttle position sensor Throttle position switch		• TCM receives an excessively low or high voltage from the sensor.	X	P1705
THROTTLE POSI SEN	TP SEN/CIRC A/T			
Engine speed signal		• TCM does not receive the proper voltage signal from the ECM.	X	P0725
ENGINE SPEED SIG				
A/T fluid temperature sensor		• TCM receives an excessively low or high voltage from the sensor.	X	P0710
BATT/FLUID TEMP SEN	ATF TEMP SEN/ CIRC			
TCM (RAM)		• TCM memory (RAM) is malfunctioning.	—	—
CONTROL UNIT (RAM)	—			
TCM (ROM)		• TCM memory (ROM) is malfunctioning.	—	—
CONTROL UNIT (ROM)	—			
TCM (EEPROM)		• TCM memory (EEROM) is malfunctioning.	—	—
CONTROL UNIT (EEPROM)	—			

CONSULT (Cont'd)

Detected items (Screen terms for CONSULT, "SELF-DIAG RESULTS" test mode)		Malfunction is detected when ...	TCM self-diagnosis	OBD-II (DTC)
"A/T"	"ENGINE"		O/D OFF Available by O/D OFF indicator lamp or "A/T" on CONSULT	SERVICE ENGINE SOON Available by malfunction indicator lamp*2, "ENGINE" on CONSULT or GST
Initial start		● This is not a malfunction message (Whenever shutting off a power supply to the TCM, this message appears on the screen.)	X	—
INITIAL START	—			
No failure (NO SELF DIAGNOSTIC FAILURE INDICATED FURTHER TESTING MAY BE REQUIRED**)		● No failure has been detected.	X	X

X: Applicable
—: Not applicable
*1: These malfunctions cannot be displayed by MIL SERVICE ENGINE SOON if another malfunction is assigned to MIL.
*2: Refer to EC-70, "DESCRIPTION".

DATA MONITOR MODE (A/T)

NBAT0184S03

Item	Display	Monitor item		Description	Remarks
		ECU input signals	Main signals		
Vehicle speed sensor 1 (A/T) (Revolution sensor)	VHCL/S SE·A/T [km/h] or [mph]	X	—	● Vehicle speed computed from signal of revolution sensor is displayed.	When racing engine in "N" or "P" position with vehicle stationary, CONSULT data may not indicate 0 km/h (0 mph).
Vehicle speed sensor 2 (Meter)	VHCL/S SE·MTR [km/h] or [mph]	X	—	● Vehicle speed computed from signal of vehicle speed sensor is displayed.	Vehicle speed display may not be accurate under approx. 10 km/h (6 mph). It may not indicate 0 km/h (0 mph) when vehicle is stationary.
Throttle position sensor	THRTL POS SEN [V]	X	—	● Throttle position sensor signal voltage is displayed.	
A/T fluid temperature sensor	FLUID TEMP SE [V]	X	—	● A/T fluid temperature sensor signal voltage is displayed. ● Signal voltage lowers as fluid temperature rises.	
Battery voltage	BATTERY VOLT [V]	X	—	● Source voltage of TCM is displayed.	
Engine speed	ENGINE SPEED [rpm]	X	X	● Engine speed, computed from engine speed signal, is displayed.	Engine speed display may not be accurate under approx. 800 rpm. It may not indicate 0 rpm even when engine is not running.
Overdrive control switch	OVERDRIVE SW [ON/OFF]	X	—	● ON/OFF state computed from signal of overdrive control SW is displayed.	

Item	Display	Monitor item		Description	Remarks
		ECU input signals	Main signals		
P/N position switch	P/N POSI SW [ON/OFF]	X	—	• ON/OFF state computed from signal of P/N position SW is displayed.	
R position switch	R POSITION SW [ON/OFF]	X	—	• ON/OFF state computed from signal of R position SW is displayed.	
D position switch	D POSITION SW [ON/OFF]	X	—	• ON/OFF state computed from signal of D position SW is displayed.	
2 position switch	2 POSITION SW [ON/OFF]	X	—	• ON/OFF status, computed from signal of 2 position SW, is displayed.	
1 position switch	1 POSITION SW [ON/OFF]	X	—	• ON/OFF status, computed from signal of 1 position SW, is displayed.	
ASCD cruise signal	ASCD·CRUISE [ON/OFF]	X	—	• Status of ASCD cruise signal is displayed. ON ... Cruising state OFF ... Normal running state	• This is displayed even when no ASCD is mounted.
ASCD OD cut signal	ASCD OD CUT [ON/OFF]	X	—	• Status of ASCD OD release signal is displayed. ON ... OD released OFF ... OD not released	• This is displayed even when no ASCD is mounted.
Kickdown switch	KICKDOWN SW [ON/OFF]	X	—	• ON/OFF status, computed from signal of kickdown SW, is displayed.	• This is displayed even when no kickdown switch is equipped.
Closed throttle position switch	CLOSED THL/SW [ON/OFF]	X	—	• ON/OFF status, computed from signal of closed throttle position SW, is displayed.	
Wide open throttle position switch	W/O THRL/ P-SW [ON/OFF]	X	—	• ON/OFF status, computed from signal of wide open throttle position SW, is displayed.	
Gear position	GEAR	—	X	• Gear position data used for computation by TCM, is displayed.	
Selector lever position	SLCT LVR POSI	—	X	• Selector lever position data, used for computation by TCM, is displayed.	• A specific value used for control is displayed if fail-safe is activated due to error.
Vehicle speed	VEHICLE SPEED [km/h] or [mph]	—	X	• Vehicle speed data, used for computation by TCM, is displayed.	
Throttle position	THROTTLE POSI [/8]	—	X	• Throttle position data, used for computation by TCM, is displayed.	• A specific value used for control is displayed if fail-safe is activated due to error.

CONSULT (Cont'd)

Item	Display	Monitor item		Description	Remarks
		ECU input signals	Main signals		
Line pressure duty	LINE PRES DTY [%]	—	X	● Control value of line pressure solenoid valve, computed by TCM from each input signal, is displayed.	
Torque converter clutch solenoid valve duty	TCC S/V DUTY [%]	—	X	● Control value of torque converter clutch solenoid valve, computed by TCM from each input signal, is displayed.	
Shift solenoid valve A	SHIFT S/V A [ON/OFF]	—	X	● Control value of shift solenoid valve A, computed by TCM from each input signal, is displayed.	Control value of solenoid is displayed even if solenoid circuit is disconnected. The "OFF" signal is displayed if solenoid circuit is shorted.
Shift solenoid valve B	SHIFT S/V B [ON/OFF]	—	X	● Control value of shift solenoid valve B, computed by TCM from each input signal, is displayed.	
Overrun clutch solenoid valve	OVERRUN/C S/V [ON/OFF]	—	X	● Control value of overrun clutch solenoid valve computed by TCM from each input signal is displayed.	
Self-diagnosis display lamp (O/D OFF indicator lamp)	SELF-D DP LMP [ON/OFF]	—	X	● Control status of O/D OFF indicator lamp is displayed.	

X: Applicable
—: Not applicable

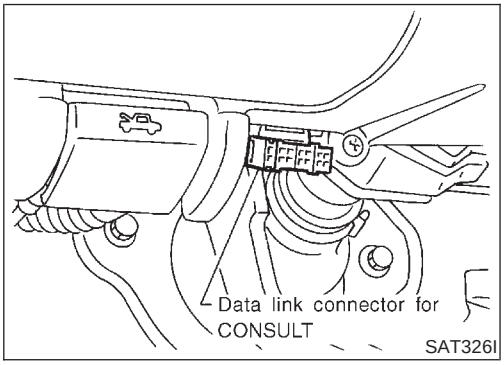

DTC WORK SUPPORT MODE WITH CONSULT

NBAT0184S04

CONSULT Setting Procedure

NBAT0184S0401

1. Turn ignition switch "OFF".
2. Connect CONSULT to Data link connector for CONSULT which is located in instrument lower panel on driver side.

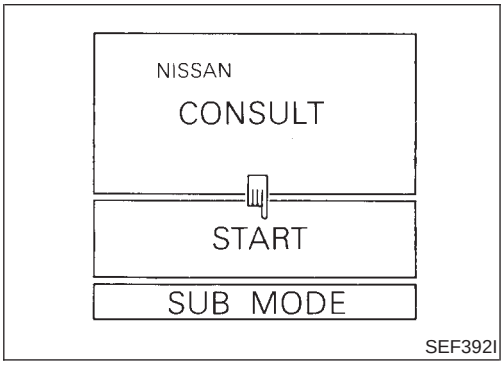

3. Turn ignition switch "ON".
4. Touch "START".

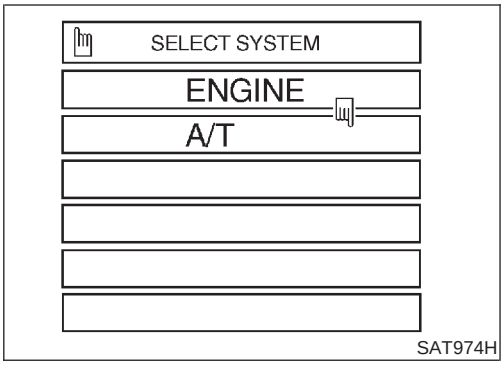

5. Touch "A/T".

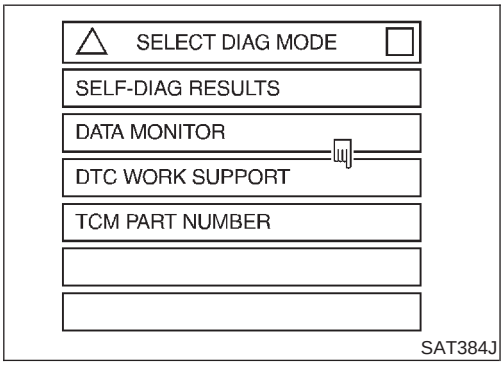

6. Touch "DTC WORK SUPPORT".

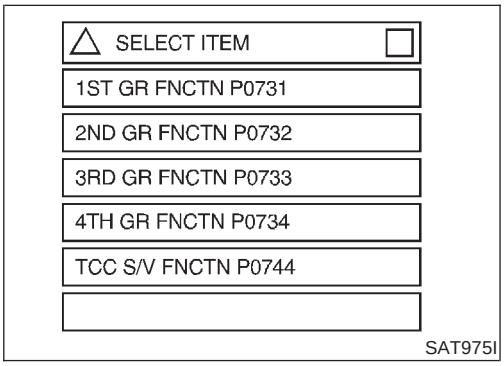

7. Touch select item menu (1ST, 2ND, etc.).

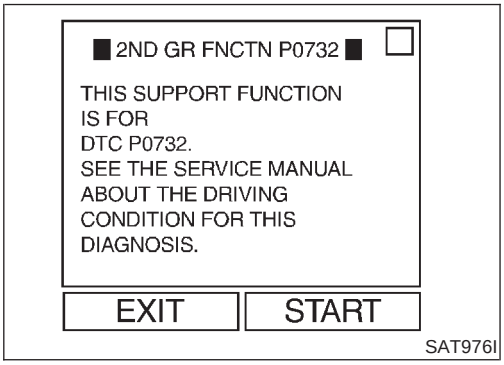

8. Touch "START".

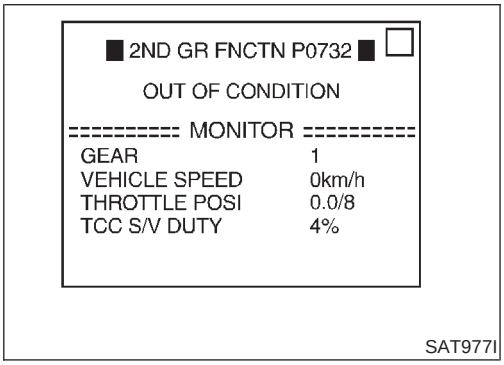

9. Perform driving test according to "DTC CONFIRMATION PROCEDURE" in "TROUBLE DIAGNOSIS FOR DTC".

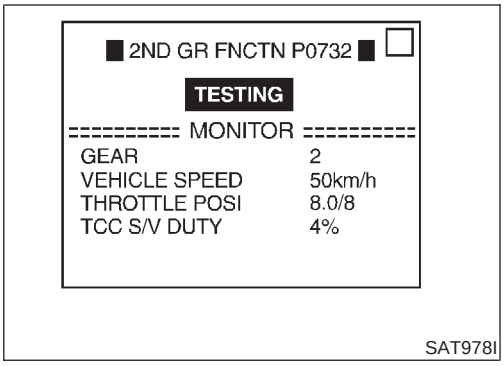

- **When testing conditions are satisfied, CONSULT screen changes from "OUT OF CONDITION" to "TESTING".**

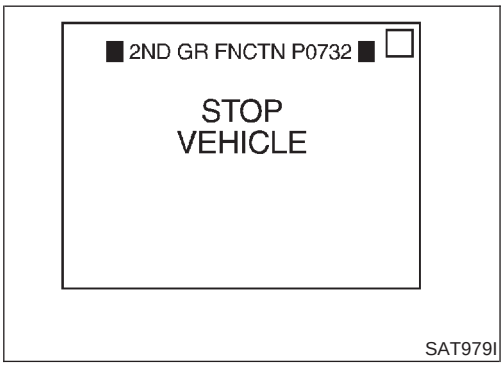

10. Stop vehicle. If "NG" appears on the screen, malfunction may exist. Go to "DIAGNOSTIC PROCEDURE".

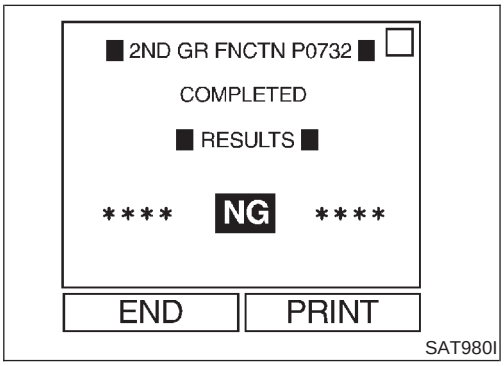

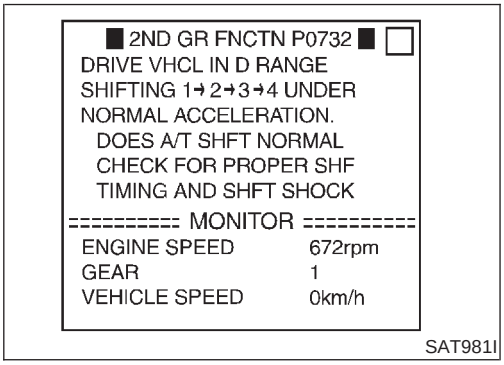

11. Perform test drive to check gear shift feeling in accordance with instructions displayed.

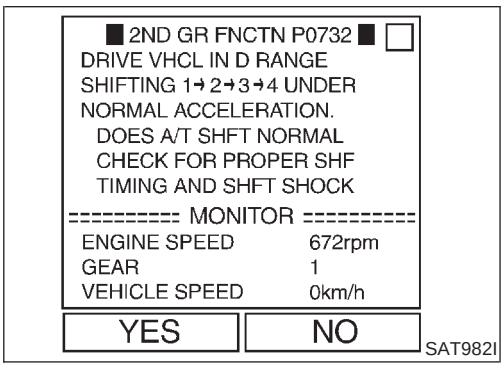

12. Touch "YES" or "NO".

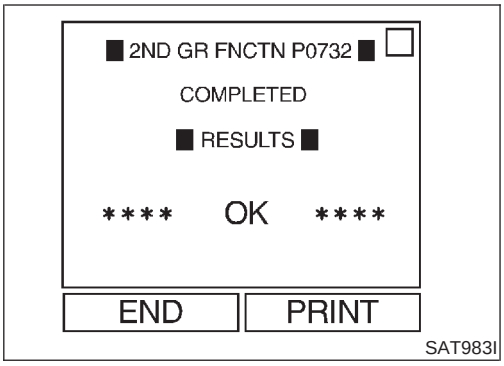

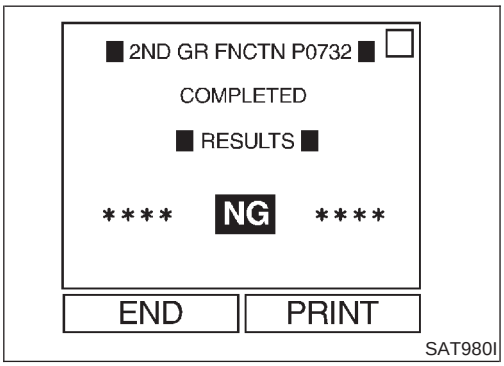

13. CONSULT procedure ended.
    If "NG" appears on the screen, a malfunction may exist. Go to "DIAGNOSTIC PROCEDURE".

DTC WORK SUPPORT MODE

NBAT0184S05

DTC work support item	Description	Check item
1ST GR FNCTN P0731	Following items for "A/T 1st gear function (P0731)" can be confirmed. ● Self-diagnosis status (whether the diagnosis is being conducted or not) ● Self-diagnosis result (OK or NG)	● Shift solenoid valve A ● Shift solenoid valve B ● Each clutch ● Hydraulic control circuit
2ND GR FNCTN P0732	Following items for "A/T 2nd gear function (P0732)" can be confirmed. ● Self-diagnosis status (whether the diagnosis is being conducted or not) ● Self-diagnosis result (OK or NG)	● Shift solenoid valve B ● Each clutch ● Hydraulic control circuit
3RD GR FNCTN P0733	Following items for "A/T 3rd gear function (P0733)" can be confirmed. ● Self-diagnosis status (whether the diagnosis is being conducted or not) ● Self-diagnosis result (OK or NG)	● Shift solenoid valve A ● Each clutch ● Hydraulic control circuit
4TH GR FNCTN P0734	Following items for "A/T 4th gear function (P0734)" can be confirmed. ● Self-diagnosis status (whether the diagnosis is being conducted or not) ● Self-diagnosis result (OK or NG)	● Shift solenoid valve A ● Shift solenoid valve B ● Overrun clutch solenoid valve ● Line pressure solenoid valve ● Each clutch ● Hydraulic control circuit
TCC S/V FNCTN P0744	Following items for "A/T TCC S/V function (lock-up) (P0744)" can be confirmed. ● Self-diagnosis status (whether the diagnosis is being conducted or not) ● Self-diagnosis result (OK or NG)	● Torque converter clutch solenoid valve ● Each clutch ● Hydraulic control circuit

Diagnostic Procedure Without CONSULT

NBAT0206

OBD-II SELF-DIAGNOSTIC PROCEDURE (WITH GST)

NBAT0206S01

Refer to EC-93, “DESCRIPTION”.

OBD-II SELF-DIAGNOSTIC PROCEDURE (NO TOOLS)

NBAT0206S02

Refer to EC-70, “DESCRIPTION”.

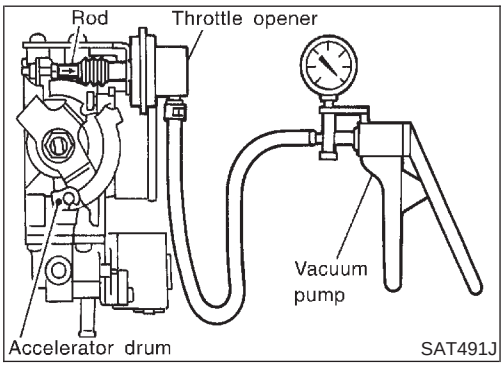

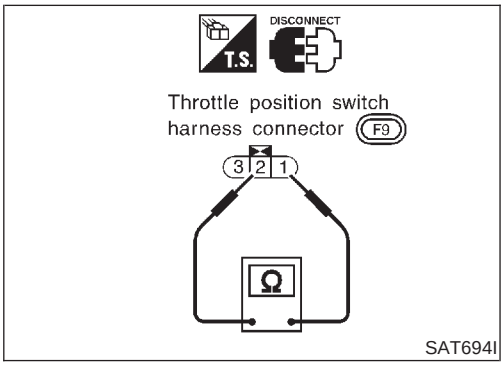

TCM SELF-DIAGNOSTIC PROCEDURE (NO TOOLS)

NBAT0206S03

Preparation

NBAT0206S0301

1. Turn ignition switch to “OFF” position.
2. Connect the handy type vacuum pump to the throttle opener and apply vacuum −25.3 kPa (−190 mmHg, −7.48 inHg).
3. Disconnect the throttle position switch harness connector.
4. Turn ignition switch to “ON” position.
5. Check continuity of the closed throttle position switch.
   Continuity should exist.
   (If continuity does not exist, check throttle opener and closed throttle position switch. Then increase vacuum until closed throttle position switch shows continuity.)
6. Go to “DIAGNOSIS START” on next page.

1	CHECK O/D OFF INDICATOR LAMP

1. Start the engine with selector lever in "P" position. Warm engine to normal operating temperature.
2. Turn ignition switch to "OFF" position.
3. Wait 5 seconds.

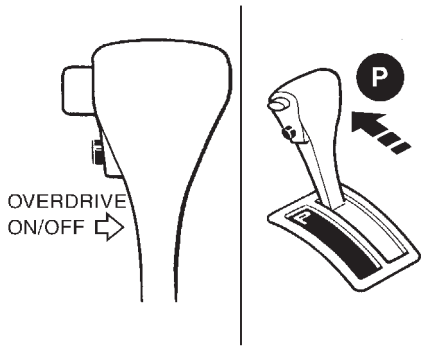

SAT967I

4. Turn ignition switch to "ON" position.
   (Do not start engine.)
5. Does O/D OFF indicator lamp come on for about 2 seconds?

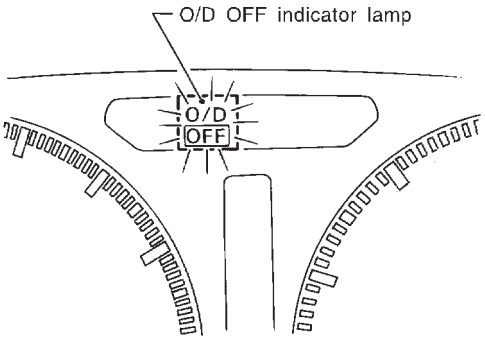

SAT325IA

Yes or No

Yes	▶	GO TO 2.
No	▶	Go to "1. O/D OFF Indicator Lamp Does Not Come On", AT-207.

2	JUDGEMENT PROCEDURE STEP 1

1. Turn ignition switch to "OFF" position.
2. Turn ignition switch to "ACC" position.
3. Move selector lever from "P" to "D" position.
4. Turn ignition switch to "ON" position. (Do not start engine.)
5. Depress and hold overdrive control switch in "OFF" position (the O/D OFF indicator lamp will be "ON") until directed to release the switch. (If O/D OFF indicator lamp does not come on, go to step 3 on AT-247).
6. Turn ignition switch to "OFF" position.

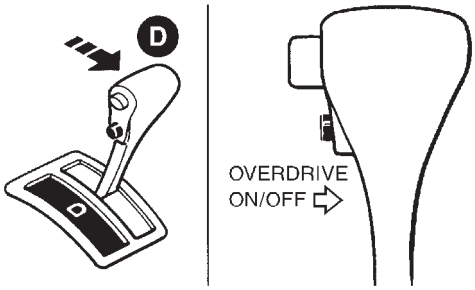

SAT968I

7. Turn ignition switch to "ON" position (Do not start engine.).
8. Release the overdrive control switch (the O/D OFF indicator lamp will be "OFF").
9. Wait 2 seconds.
10. Move selector lever to "2" position.
11. Depress and release the overdrive control switch (the O/D OFF indicator lamp will be "ON").
12. Depress and hold the overdrive control switch (the O/D OFF indicator lamp will be "OFF") until directed to release the switch.

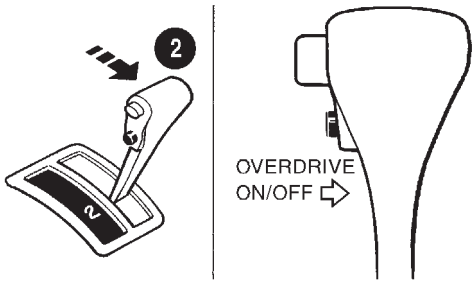

SAT969I

▶	GO TO 3.

3	JUDGEMENT PROCEDURE STEP 2

1. Move selector lever to "1" position.
2. Release the overdrive control switch.
3. Depress and release the overdrive control switch (the O/D OFF indicator lamp will be "ON").
4. Depress and release the overdrive control switch (the O/D OFF indicator lamp will be "OFF").
5. Depress and hold the overdrive control switch (the O/D OFF indicator lamp will be "ON") until directed to release the switch.

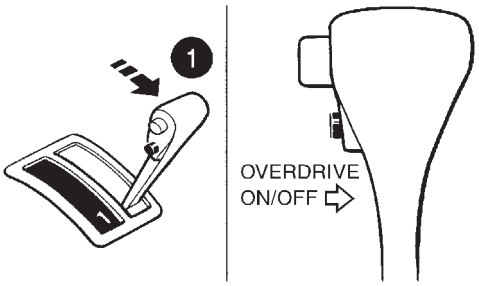

SAT970I

6. Depress accelerator pedal fully and release it.
7. Release the overdrive control switch (the O/D OFF indicator lamp will begin to flash "ON" and "OFF").

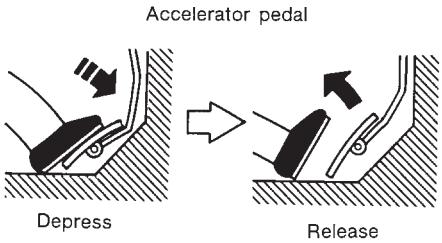

SAT981F

▶	GO TO 4.

4	CHECK SELF-DIAGNOSIS CODE

Check O/D OFF indicator lamp.
Refer to JUDGEMENT OF SELF-DIAGNOSIS CODE, AT-50.

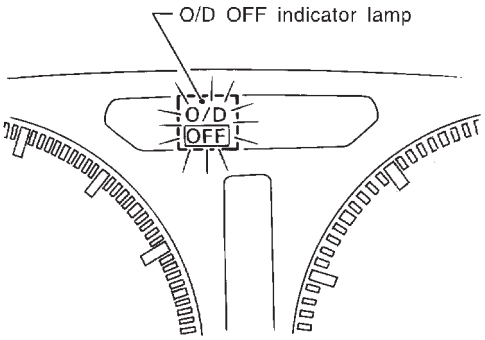

SAT325IA

▶	**DIAGNOSIS END**

JUDGEMENT OF SELF-DIAGNOSIS CODE

NBAT0206S04

O/D OFF indicator lamp:

All judgement flickers are same.

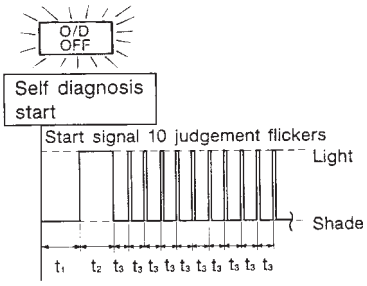

SAT436F

All circuits that can be confirmed by self-diagnosis are OK.

1st judgement flicker is longer than others.

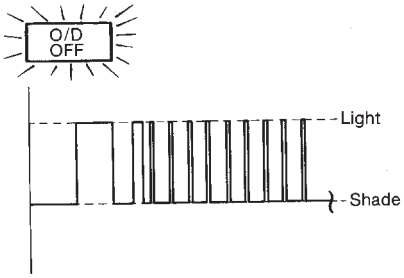

SAT437F

Revolution sensor circuit is short-circuited or disconnected.
⇒ **Go to VEHICLE SPEED SENSOR·A/T (REVOLUTION SENSOR), AT-110.**

2nd judgement flicker is longer than others.

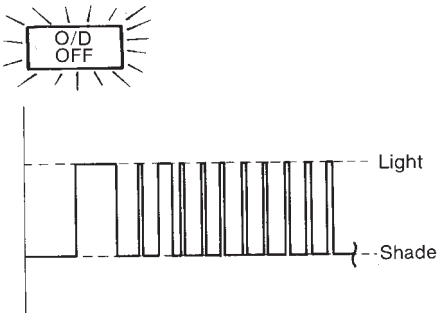

SAT439F

Vehicle speed sensor circuit is short-circuited or disconnected.
⇒ **Go to VEHICLE SPEED SENSOR·MTR, AT-195.**

3rd judgement flicker is longer than others.

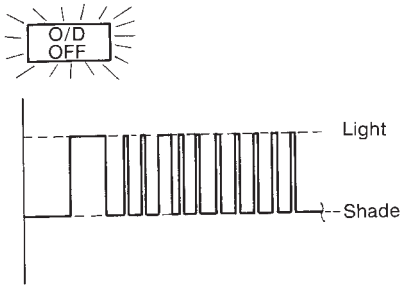

SAT441F

Throttle position sensor circuit is short-circuited or disconnected.
⇒ **Go to THROTTLE POSITION SENSOR, AT-175.**

4th judgement flicker is longer than others.

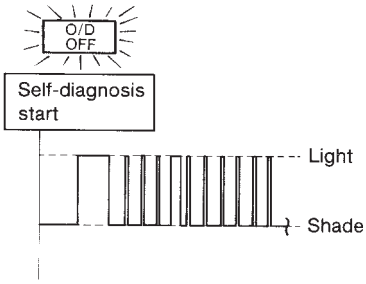

SAT443F

Shift solenoid valve A circuit is short-circuited or disconnected.
⇒ **Go to SHIFT SOLENOID VALVE A, AT-167.**

5th judgement flicker is longer than others.

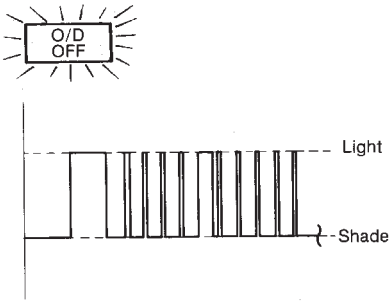

SAT445F

Shift solenoid valve B circuit is short-circuited or disconnected.
⇒ **Go to SHIFT SOLENOID VALVE B, AT-171.**

O/D OFF indicator lamp:

6th judgement flicker is longer than others.

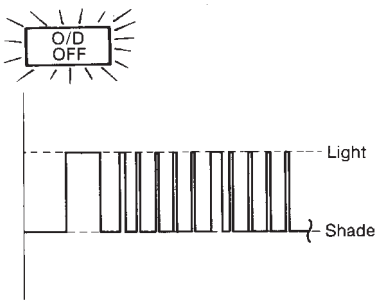

SAT447F

Overrun clutch solenoid valve circuit is short-circuited or disconnected.
⇒ **Go to OVERRUN CLUTCH SOLENOID VALVE, AT-184.**

7th judgement flicker is longer than others.

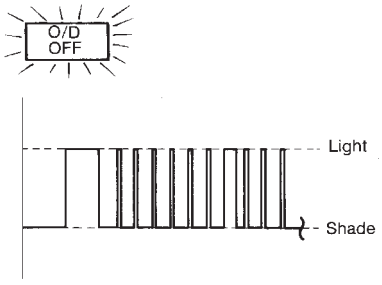

SAT449F

Torque converter clutch solenoid valve circuit is short-circuited or disconnected.
⇒ **Go to TORQUE CONVERTER CLUTCH SOLENOID VALVE, AT-147.**

8th judgement flicker is longer than others.

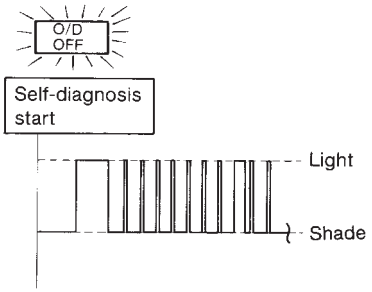

SAT451F

A/T fluid temperature sensor is disconnected or TCM power source circuit is damaged.
⇒ **Go to A/T FLUID TEMPERATURE SENSOR AND TCM POWER SOURCE, AT-189.**

9th judgement flicker is longer than others.

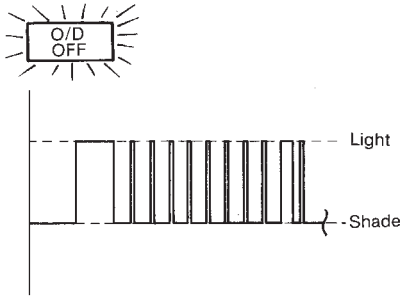

SAT453F

Engine speed signal circuit is short-circuited or disconnected.
⇒ **Go to ENGINE SPEED SIGNAL, AT-115.**

10th judgement flicker is longer than others.

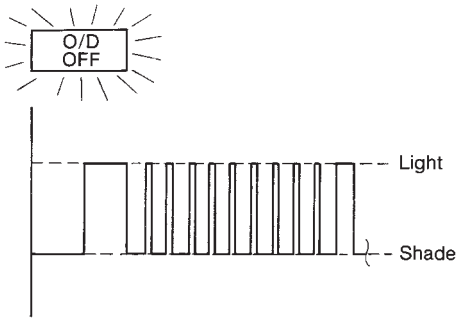

SAT455F

Line pressure solenoid valve circuit is short-circuited or disconnected.
⇒ **Go to LINE PRESSURE SOLENOID VALVE, AT-161.**

Flickers as shown below.

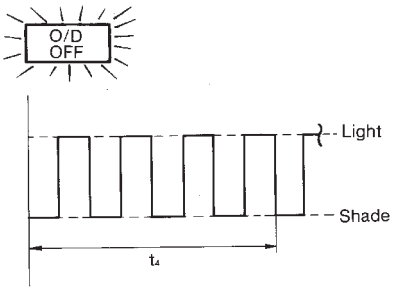

SAT457F

Battery power is low.
Battery has been disconnected for a long time.
Battery is connected conversely.
(When reconnecting TCM connectors. — This is not a problem.)

O/D OFF indicator lamp:	
Lamp comes on. 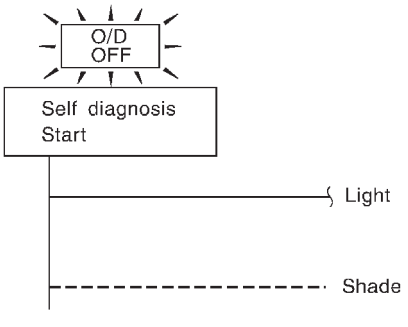 SAT367J PNP switch, overdrive control switch or throttle position switch circuit is disconnected or TCM is damaged. ⇒ **Go to 21. TCM Self-diagnosis Does Not Activate (PNP, OVERDRIVE CONTROL AND THROTTLE POSITION SWITCHES), AT-244.**	

t_1 = 2.5 seconds t_2 = 2.0 seconds t_3 = 1.0 second t_4 = 1.0 second

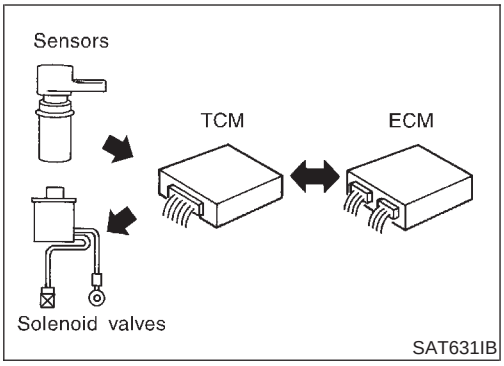

SAT631IB

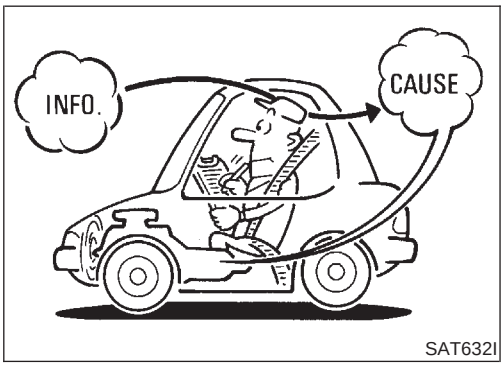

SAT632I

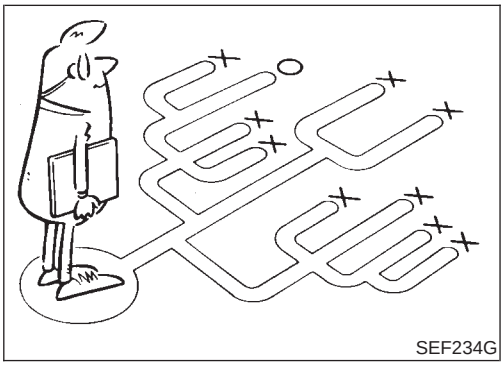
SEF234G

Introduction

NBAT0019

The TCM receives a signal from the vehicle speed sensor, throttle position sensor or PNP switch and provides shift control or lock-up control via A/T solenoid valves.

The TCM also communicates with the ECM by means of a signal sent from sensing elements used with the OBD-related parts of the A/T system for malfunction-diagnostic purposes. The TCM is capable of diagnosing malfunctioning parts while the ECM can store malfunctions in its memory.

Input and output signals must always be correct and stable in the operation of the A/T system. The A/T system must be in good operating condition and be free of valve seizure, solenoid valve malfunction, etc.

It is much more difficult to diagnose a problem that occurs intermittently rather than continuously. Most intermittent problems are caused by poor electric connections or improper wiring. In this case, careful checking of suspected circuits may help prevent the replacement of good parts.

A visual check only may not find the cause of the problems. A road test with CONSULT (or GST) or a circuit tester connected should be performed. Follow the “Work Flow”. Refer to AT-57.

Before undertaking actual checks, take a few minutes to talk with a customer who approaches with a driveability complaint. The customer can supply good information about such problems, especially intermittent ones. Find out what symptoms are present and under what conditions they occur. A “Diagnostic Worksheet” like the example (AT-55) should be used.

Start your diagnosis by looking for “conventional” problems first. This will help troubleshoot driveability problems on an electronically controlled engine vehicle.

Also check related Service bulletins.

DIAGNOSTIC WORKSHEET

=NBAT0019S01

Information From Customer

NBAT0019S0101

KEY POINTS

WHAT ..... Vehicle & A/T model
WHEN..... Date, Frequencies
WHERE..... Road conditions
HOW..... Operating conditions, Symptoms

Customer name MR/MS	Model & Year	VIN
Trans. model	Engine	Mileage
Incident Date	Manuf. Date	In Service Date
Frequency	☐ Continuous ☐ Intermittent (times a day)	
Symptoms	☐ Vehicle does not move. (☐ Any position ☐ Particular position)	
	☐ No up-shift (☐ 1st → 2nd ☐ 2nd → 3rd ☐ 3rd → O/D)	
	☐ No down-shift (☐ O/D → 3rd ☐ 3rd → 2nd ☐ 2nd → 1st)	
	☐ Lockup malfunction	
	☐ Shift point too high or too low.	
	☐ Shift shock or slip (☐ N → D ☐ Lockup ☐ Any drive position)	
	☐ Noise or vibration	
	☐ No kickdown	
	☐ No pattern select	
	☐ Others ( )	
O/D OFF indicator lamp	Blinks for about 8 seconds.	
	☐ Continuously lit	☐ Not lit
Malfunction indicator lamp (MIL)	☐ Continuously lit	☐ Not lit

Diagnostic Worksheet

=NBAT0019S0102

1.	☐ Read the Fail-safe Remarks and listen to customer complaints.			AT-8
2.	☐ CHECK A/T FLUID			AT-59
		☐ Leakage (Follow specified procedure) ☐ Fluid condition ☐ Fluid level		
3.	Perform STALL TEST and LINE PRESSURE TEST.			AT-59, AT-62
		☐ Stall test — Mark possible damaged components/others.		
			☐ Torque converter one-way clutch ☐ Reverse clutch ☐ Forward clutch ☐ Overrun clutch ☐ Forward one-way clutch	☐ Low & reverse brake ☐ Low one-way clutch ☐ Engine ☐ Line pressure is low ☐ Clutches and brakes except high clutch and brake band are OK
		☐ Pressure test — Suspected parts:		
4.	☐ Perform all ROAD TEST and mark required procedures.			AT-63
	4-1.	Check before engine is started.		AT-64
		☐ SELF-DIAGNOSTIC PROCEDURE - Mark detected items.		
			☐ PNP switch, AT-99. ☐ A/T fluid temperature sensor, AT-105. ☐ Vehicle speed sensor·A/T (Revolution sensor), AT-110. ☐ Engine speed signal, AT-115. ☐ Torque converter clutch solenoid valve, AT-147. ☐ Line pressure solenoid valve, AT-161. ☐ Shift solenoid valve A, AT-167. ☐ Shift solenoid valve B, AT-171. ☐ Throttle position sensor, AT-175. ☐ Overrun clutch solenoid valve, AT-184. ☐ A/T fluid temperature sensor and TCM power source, AT-189. ☐ Vehicle speed sensor·MTR, AT-195. ☐ Control unit (RAM), control unit (ROM), AT-199. ☐ Control unit (EEP ROM), AT-201. ☐ PNP, overdrive control and throttle position switches, AT-244. ☐ Battery ☐ Others	
	4-2.	Check at idle		AT-66
		☐ 1. O/D OFF Indicator Lamp Does Not Come On, AT-207. ☐ 2. Engine Cannot Be Started In "P" And "N" Position, AT-209. ☐ 3. In "P" Position, Vehicle Moves Forward Or Backward When Pushed, AT-210. ☐ 4. In "N" Position, Vehicle Moves, AT-211. ☐ 5. Large Shock. "N" → "R" Position, AT-213. ☐ 6. Vehicle Does Not Creep Backward In "R" Position, AT-215. ☐ 7. Vehicle Does Not Creep Forward In "D", "2" Or "1" Position, AT-218.		

4.	4-3.	Cruise test		AT-67 AT-71
		Part-1		
		☐ 8. Vehicle Cannot Be Started From D_1, AT-221. ☐ 9. A/T Does Not Shift: $D_1 \rightarrow D_2$ Or Does Not Kickdown: $D_4 \rightarrow D_2$, AT-224. ☐ 10. A/T Does Not Shift: $D_2 \rightarrow D_3$, AT-227. ☐ 11. A/T Does Not Shift: $D_3 \rightarrow D_4$, AT-230. ☐ 12. A/T Does Not Perform Lock-up, AT-233. ☐ 13. A/T Does Not Hold Lock-up Condition, AT-235. ☐ 14. Lock-up Is Not Released, AT-237. ☐ 15. Engine Speed Does Not Return To Idle (Light Braking $D_4 \rightarrow D_3$), AT-238.		
		Part-2		AT-75
		☐ 16. Vehicle Does Not Start From D_1, AT-240. ☐ 9. A/T Does Not Shift: $D_1 \rightarrow D_2$ Or Does Not Kickdown: $D_4 \rightarrow D_2$, AT-224. ☐ 10. A/T Does Not Shift: $D_2 \rightarrow D_3$, AT-227. ☐ 11. A/T Does Not Shift: $D_3 \rightarrow D_4$, AT-230.		
		Part-3		AT-77
		☐ 17. A/T Does Not Shift: $D_4 \rightarrow D_3$ When Overdrive Control Switch "ON" → "OFF", AT-241 ☐ 15. Engine Speed Does Not Return To Idle (Engine Brake In D_3), AT-238. ☐ 18. A/T Does Not Shift: $D_3 \rightarrow 2_2$, When Selector Lever "D" → "2" Position, AT-242. ☐ 15. Engine Speed Does Not Return To Idle (Engine Brake In 2_2), AT-238. ☐ 19. A/T Does Not Shift: $2_2 \rightarrow 1_1$, When Selector Lever "2" → "1" Position, AT-243. ☐ 20. Vehicle Does Not Decelerate By Engine Brake, AT-244. ☐ SELF-DIAGNOSTIC PROCEDURE — Mark detected items.		
			☐ PNP switch, AT-99. ☐ A/T fluid temperature sensor, AT-105. ☐ Vehicle speed sensor·A/T (Revolution sensor), AT-110. ☐ Engine speed signal, AT-115. ☐ Torque converter clutch solenoid valve, AT-147. ☐ Line pressure solenoid valve, AT-161. ☐ Shift solenoid valve A, AT-167. ☐ Shift solenoid valve B, AT-171. ☐ Throttle position sensor, AT-175. ☐ Overrun clutch solenoid valve, AT-184. ☐ A/T fluid temperature sensor and TCM power source, AT-189. ☐ Vehicle speed sensor·MTR, AT-195. ☐ Control unit (RAM), control unit (ROM), AT-199. ☐ Control unit (EEP ROM), AT-201. ☐ PNP, overdrive control and throttle position switches, AT-244. ☐ Battery ☐ Others	
5.	☐ For self-diagnosis NG items, inspect each component. Repair or replace the damaged parts.			AT-38
6.	☐ Perform all ROAD TEST and re-mark required procedures.			AT-63
7.	☐ Perform DTC CONFIRMATION PROCEDURE for following MIL indicating items and check out NG items. Refer to EC-55, "Emission-related Diagnostic Information".			EC-55
		☐ DTC (P0731, 1103) A/T 1st gear function, AT-119. ☐ DTC (P0732, 1104) A/T 2nd gear function, AT-125. ☐ DTC (P0733, 1105) A/T 3rd gear function, AT-131. ☐ DTC (P0734, 1106) A/T 4th gear function, AT-137. ☐ DTC (P0744, 1107) A/T TCC S/V function (lock-up), AT-152.		
8.	☐ Perform the Diagnostic Procedures for all remaining items marked NG. Repair or replace the damaged parts. Refer to the Symptom Chart when you perform the procedures. (The chart also shows some other possible symptoms and the component inspection orders.)			AT-92 AT-81
9.	☐ Erase DTC from TCM and ECM memories.			AT-35

Work Flow

NBAT0020

HOW TO PERFORM TROUBLE DIAGNOSES FOR QUICK AND ACCURATE REPAIR

NBAT0020S01

A good understanding of the malfunction conditions can make troubleshooting faster and more accurate.
In general, each customer feels differently about a problem. It is important to fully understand the symptoms or conditions for a customer complaint.
Make good use of the two sheets provided, “INFORMATION FROM CUSTOMER” (AT-54) and “DIAGNOSTIC WORKSHEET” (AT-55), to perform the best troubleshooting possible.

WORK FLOW CHART

NBAT0020S02

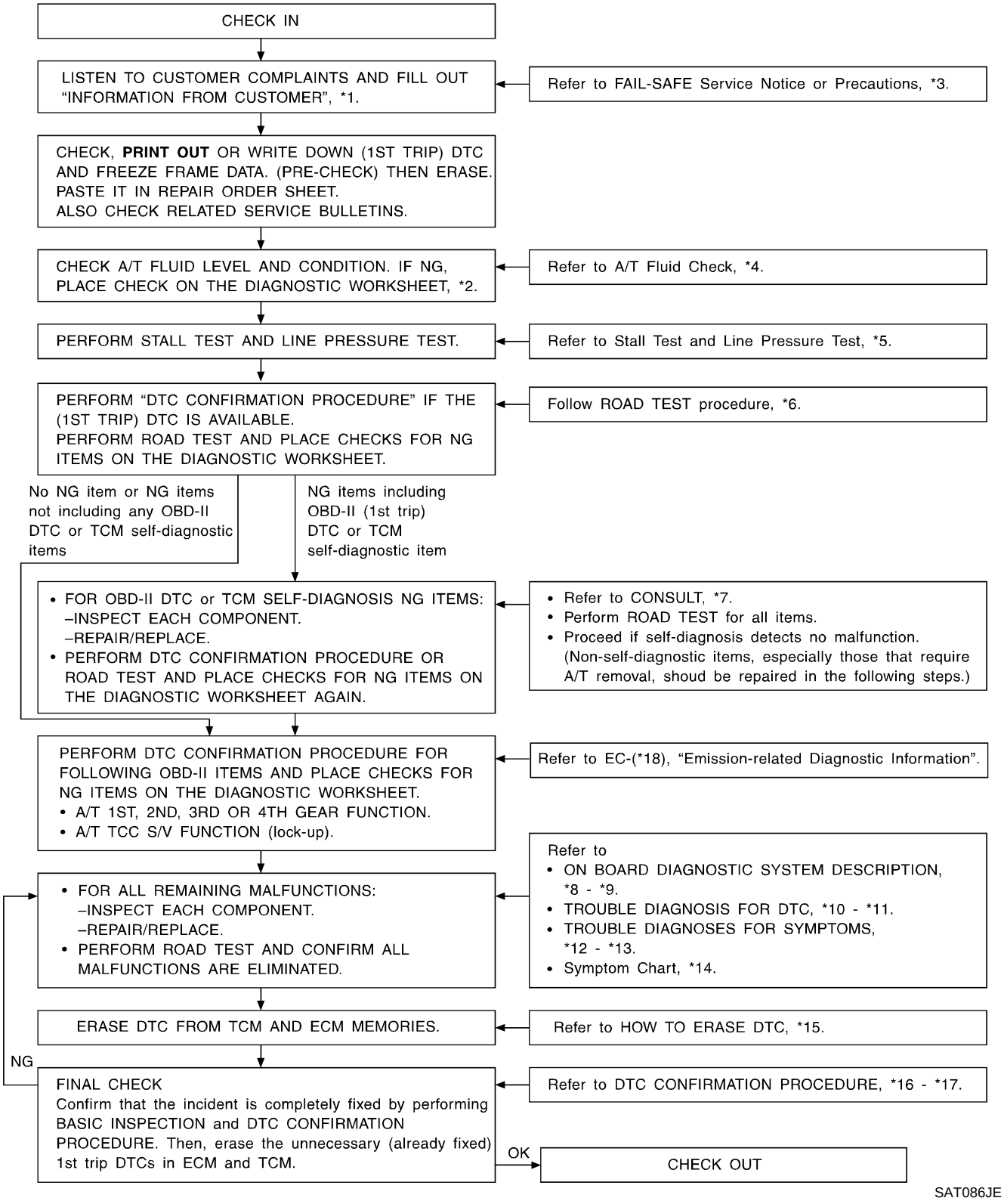

SAT086JE

*1: AT-54	*7: AT-37	*13: AT-244
*2: AT-55	*8: AT-33	*14: AT-81
*3: AT-8	*9: AT-50	*15: AT-35
*4: AT-59	*10: AT-99	*16: AT-100
*5: AT-59, 62	*11: AT-195	*17: AT-195
*6: AT-63	*12: AT-203	*18: EC-55

A/T Fluid Check

NBAT0021

FLUID LEAKAGE CHECK

NBAT0021S01

1. Clean area suspected of leaking. — for example, mating surface of converter housing and transmission case.
2. Start engine, apply foot brake, place selector lever in “D” position and wait a few minutes.
3. Stop engine.
4. Check for fresh leakage.

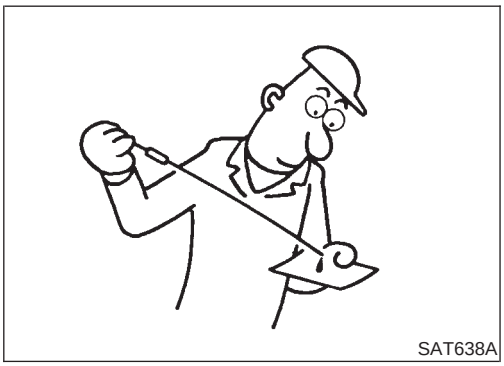
SAT638A

FLUID CONDITION CHECK

NBAT0021S02

Fluid color	Suspected problem
Dark or black with burned odor	Wear of frictional material
Milky pink	Water contamination — Road water entering through filler tube or breather
Varnished fluid, light to dark brown and tacky	Oxidation — Over or under filling, — Overheating

FLUID LEVEL CHECK

NBAT0021S03

Refer to MA-21, “Checking A/T Fluid”.

Stall Test

NBAT0022

STALL TEST PROCEDURE

NBAT0022S01

1. Check A/T fluid and engine oil levels. If necessary, add fluid and oil.
2. Drive vehicle for approx. 10 minutes or until fluid and oil reach operating temperature.

   ATF operating temperature:
   50 - 80°C (122 - 176°F)

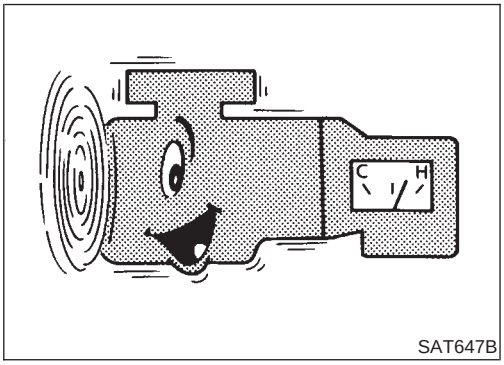

SAT647B

3. Set parking brake and block wheels.
4. Install a tachometer where it can be seen by driver during test.

- **It is good practice to put a mark on point of specified engine rpm on indicator.**

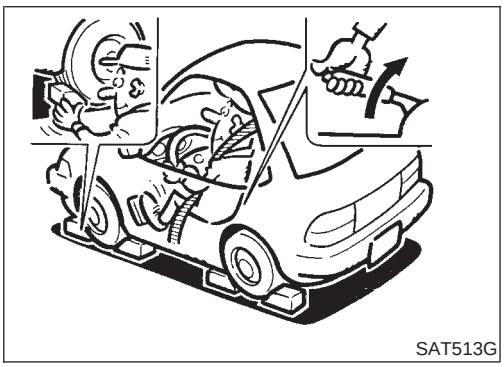
SAT513G

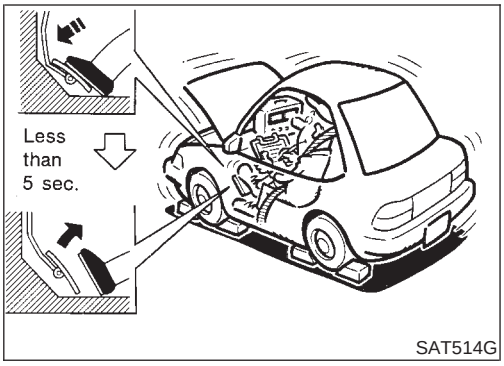

SAT514G

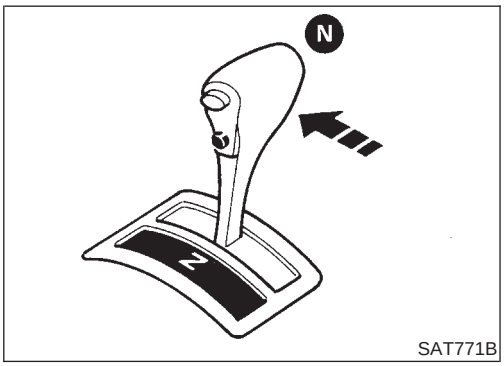

SAT771B

5. Start engine, apply foot brake, and place selector lever in "D" position.
6. Accelerate to wide open throttle gradually while applying foot brake.
7. Quickly note the engine stall revolution and immediately release throttle.

- **During test, never hold throttle wide open for less than 5 seconds.**

Stall revolution:
2,440 - 2,640 rpm

8. Move selector lever to "N" position.
9. Cool off ATF.

- **Run engine at idle for at least one minute.**

10. Repeat steps 5 through 9 with selector lever in "2", "1" and "R" positions.

JUDGEMENT OF STALL TEST

NBAT0022S02

The test result and possible damaged components relating to each result are shown in the illustration. In order to pinpoint the possible damaged components, follow the WORK FLOW shown in AT-57.

NOTE:

Stall revolution is too high in "D" or "2" position:

- Slippage occurs in 1st gear but not in 2nd and 3rd gears. ..... Low one-way clutch slippage
- Slippage occurs at the following gears:
  1st through 3rd gears in "D" position and engine brake functions.
  1st and 2nd gears in "2" position and engine brake functions with accelerator pedal released (fully closed throttle). ..... Forward clutch or forward one-way clutch slippage

Stall revolution is too high in "R" position:

- Engine brake does not function in "1" position. ..... Low & reverse brake slippage
- Engine brake functions in "1" position. ..... Reverse clutch slippage

Stall revolution within specifications:

- Vehicle does not achieve speed of more than 80 km/h (50 MPH). ..... One-way clutch seizure in torque converter housing

CAUTION:

Be careful since automatic fluid temperature increases abnormally.

- Slippage occurs in 3rd and 4th gears in "D" position. ..... High clutch slippage
- Slippage occurs in 2nd and 4th gear in "D" position. ..... Brake band slippage

Stall revolution less than specifications:

- Poor acceleration during starts. ..... One-way clutch seizure in torque converter

Selector lever position	Judgement		
D	L	O	H
2	L	O	H
1	L	O	O
R	L	H	H

O : Stall revolution is normal.
H : Stall revolution is higher than specified.
L : Stall revolution is lower than specified.

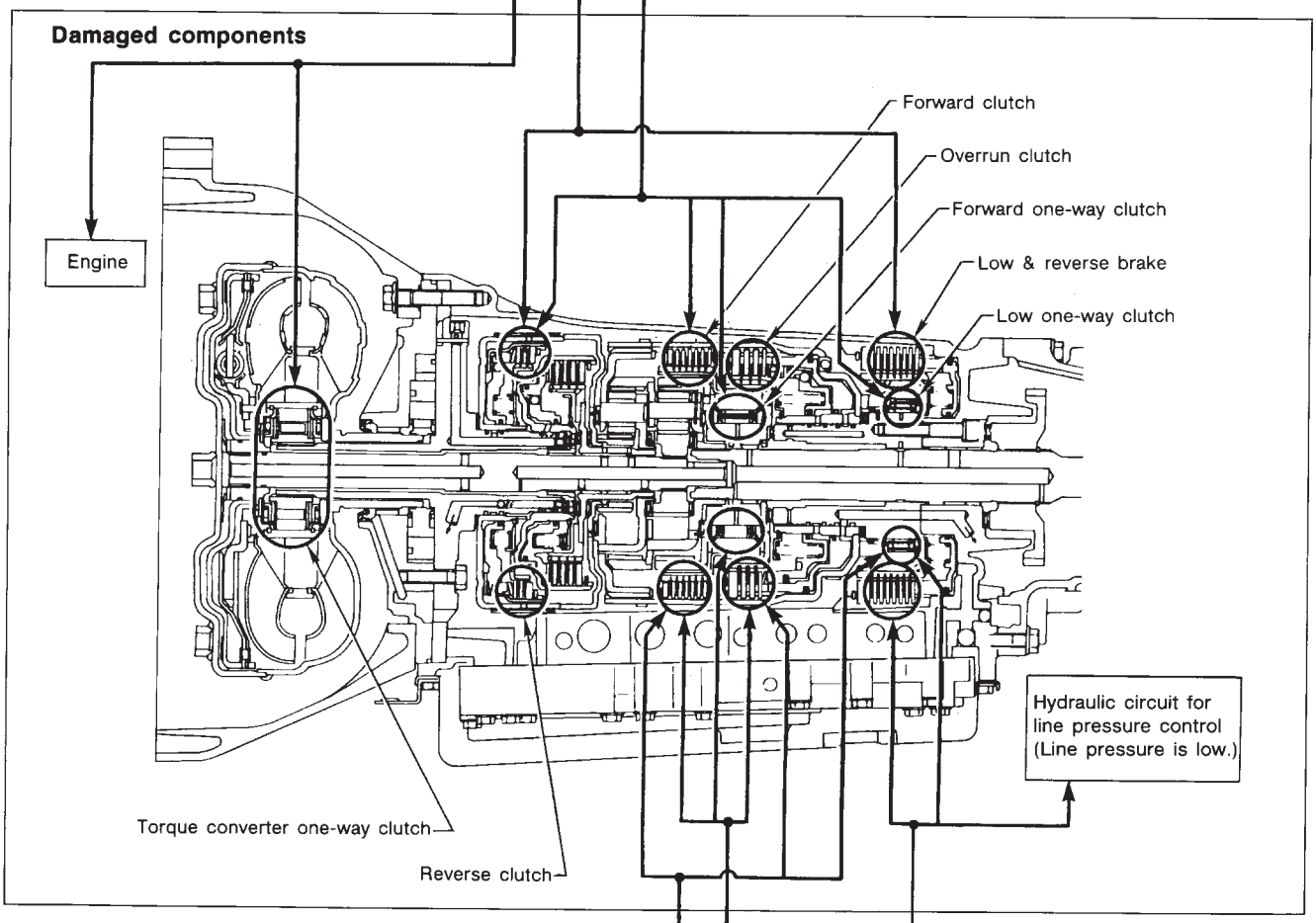

Clutches and brakes except high clutch and brake band are OK. (Condition of high clutch and brake band cannot be confirmed by stall test.)

Selector lever position	Judgement			
D	H	H	H	O
2	H	H	H	O
1	O	H	H	O
R	O	O	H	O

SAT392H

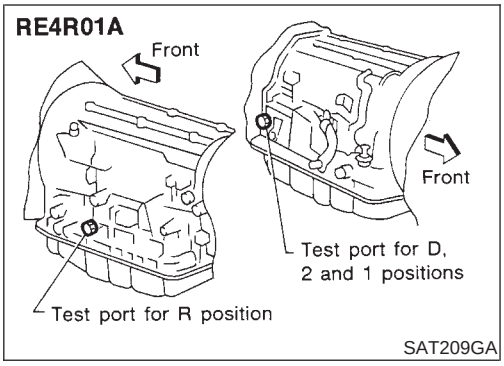

SAT209GA

Line Pressure Test

NBAT0023

- Location of line pressure test ports.
- **Always replace line pressure plugs as they are self-sealing bolts.**

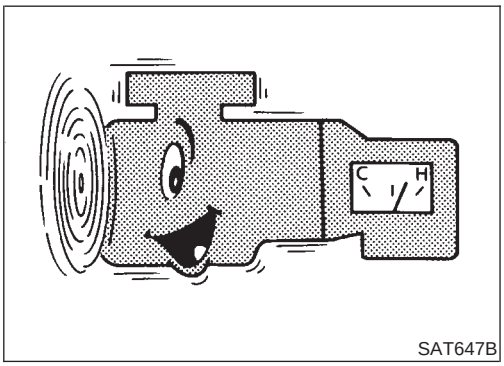

SAT647B

LINE PRESSURE TEST PROCEDURE

NBAT0023S01

1. Check A/T fluid and engine oil levels. If necessary, add fluid and oil.
2. Drive vehicle for approx. 10 minutes or until fluid and oil reach operating temperature.

   ATF operating temperature:
   50 - 80°C (122 - 176°F)

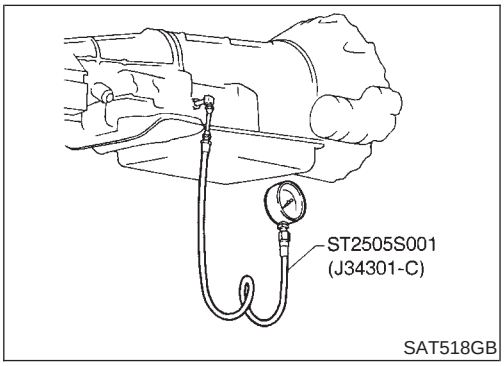

SAT518GB

3. Install pressure gauge to corresponding line pressure port.

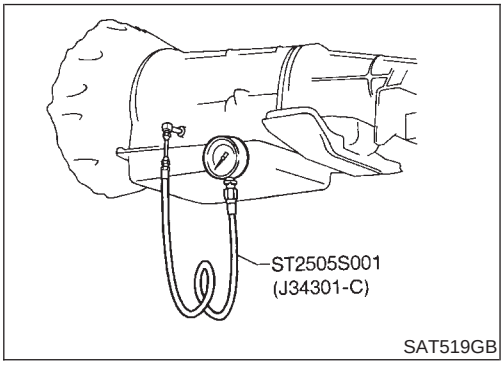

SAT519GB

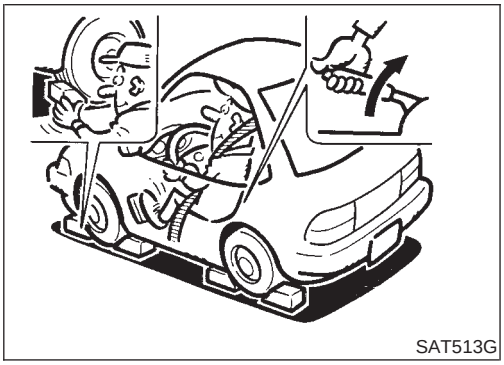
SAT513G

4. Set parking brake and block wheels.

- **Continue to depress brake pedal fully while line pressure test is being performed at stall speed.**

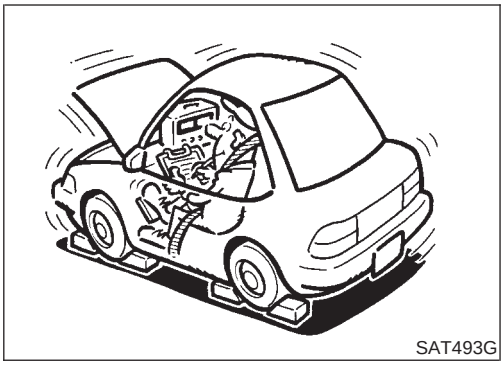
SAT493G

5. Start engine and measure line pressure at idle and stall speed.
- **When measuring line pressure at stall speed, follow the stall test procedure.**

Line pressure:
Refer to SDS, AT-339.

JUDGEMENT OF LINE PRESSURE TEST

NBAT0023S02

Judgement		Suspected parts
At idle	Line pressure is low in all positions.	• Oil pump wear • Control piston damage • Pressure regulator valve or plug sticking • Spring for pressure regulator valve damaged • Fluid pressure leakage between oil strainer and pressure regulator valve • Clogged strainer
	Line pressure is low in particular position.	• Fluid pressure leakage between manual valve and particular clutch • For example, line pressure is: — Low in "R" and "1" positions, but — Normal in "D" and "2" positions. Then, fluid leakage exists at or around low and reverse brake circuit. Refer to "CLUTCH AND BAND CHART", AT-17.
	Line pressure is high.	• Mal-adjustment of throttle position sensor • Fluid temperature sensor damaged • Line pressure solenoid valve sticking • Short circuit of line pressure solenoid valve circuit • Pressure modifier valve sticking • Pressure regulator valve or plug sticking • Open in dropping resistor circuit
At stall speed	Line pressure is low.	• Mal-adjustment of throttle position sensor • Line pressure solenoid valve sticking • Short circuit of line pressure solenoid valve circuit • Pressure regulator valve or plug sticking • Pressure modifier valve sticking • Pilot valve sticking

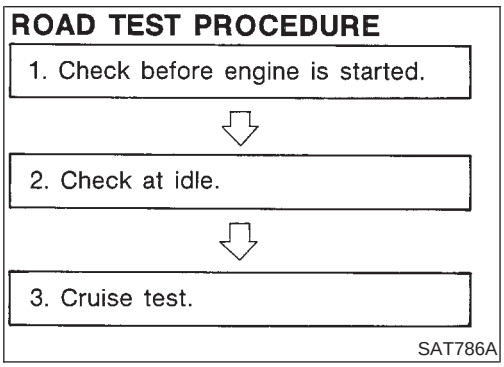

Road Test

NBAT0024

DESCRIPTION

NBAT0024S01

- The purpose of the test is to determine overall performance of A/T and analyze causes of problems.
- The road test consists of the following three parts:

1. Check before engine is started
2. Check at idle
3. Cruise test

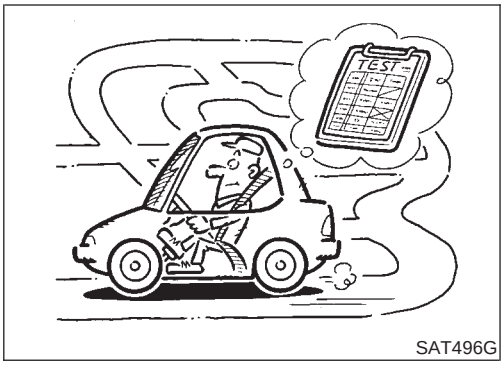

SAT496G

- Before road test, familiarize yourself with all test procedures and items to check.
- Conduct tests on all items until specified symptom is found. Troubleshoot items which check out No Good after road test. Refer to "ON BOARD DIAGNOSTIC SYSTEM DESCRIPTION" and "TROUBLE DIAGNOSES FOR SYMPTOMS", AT-33 - AT-50 and AT-203 - AT-244.

1. CHECK BEFORE ENGINE IS STARTED

NBAT0024S02

1	CHECK O/D OFF INDICATOR LAMP

1. Park vehicle on flat surface.
2. Move selector lever to "P" position.
3. Turn ignition switch to "OFF" position.
   Wait at least 5 seconds.

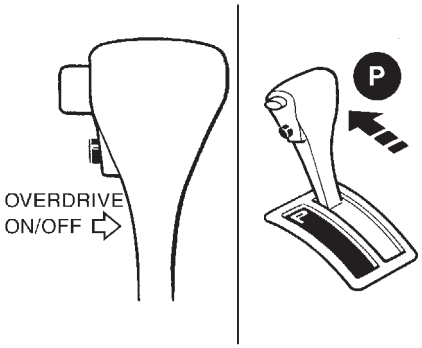

SAT967I

4. Turn ignition switch to "ON" position. (Do not start engine.)
5. Does O/D OFF indicator lamp come on for about 2 seconds?

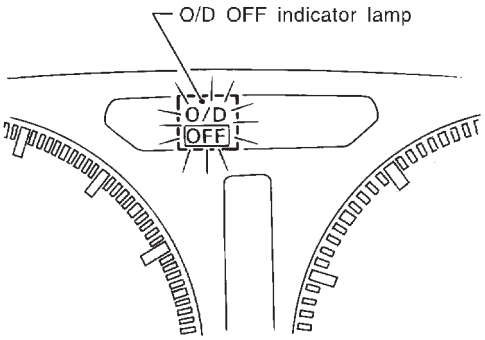

SAT325IA

Yes or No

Yes	▶	GO TO 2.
No	▶	Go to "1. O/D OFF Indicator Lamp Does Not Come On", AT-207.

2	CHECK O/D OFF INDICATOR LAMP
Does O/D OFF indicator lamp flicker for about 8 seconds?	

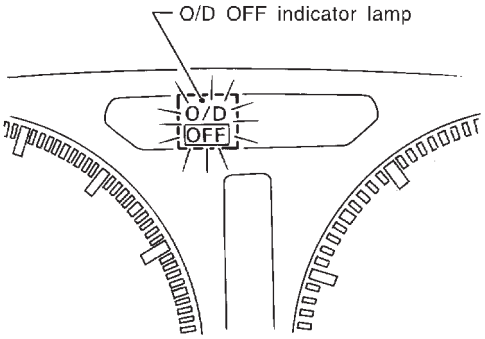

SAT325IA

Yes or No

Yes	▶	Perform self-diagnosis. Refer to TCM SELF-DIAGNOSIS PROCEDURE (No Tools), AT-46.
No	▶	GO TO 3.

3	CHECK NG ITEM
1. Turn ignition switch to "OFF" position. 2. Perform self-diagnosis and note NG items. Refer to TCM SELF-DIAGNOSIS PROCEDURE (No Tools), AT-46.	
▶	Go to "2. Check at idle", AT-66.

2. CHECK AT IDLE

=NBAT0024S03

1	CHECK ENGINE START
1. Park vehicle on flat surface. 2. Turn ignition switch to "OFF" position. 3. Move selector lever to "P" or "N" position. 4. Turn ignition switch to start position. 5. Is engine started?	
Yes or No	
Yes ▶	GO TO 2.
No ▶	Go to "2. Engine Cannot Be Started In "P" and "N" Position", AT-209.

2	CHECK ENGINE START
1. Turn ignition switch to "OFF" position. 2. Move selector lever to "D", "1", "2" or "R" position. 3. Turn ignition switch to start position. 4. Is engine started?	
Yes or No	
Yes ▶	Go to "2. Engine Cannot Be Started In "P" and "N" Position", AT-209.
No ▶	GO TO 3.

3	CHECK VEHICLE MOVE
1. Turn ignition switch to "OFF" position. 2. Move selector lever to "P" position. 3. Release parking brake. 4. Push vehicle forward or backward. 5. Does vehicle move when it is pushed forward or backward?	
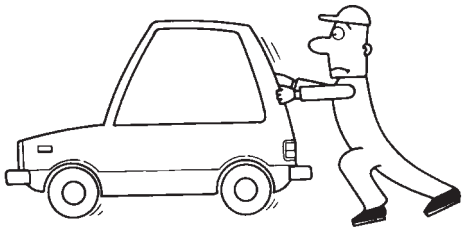 SAT796A	
Yes or No	
Yes ▶	Go to "3. In "P" Position, Vehicle Moves Forward Or Backward When Pushed", AT-210.
No ▶	GO TO 4.

4	CHECK VEHICLE MOVE
1. Apply parking brake. 2. Move selector lever to "N" position. 3. Turn ignition switch to "START" position and start engine. 4. Release parking brake. 5. Does vehicle move forward or backward?	
Yes or No	
Yes ▶	Go to "4. In "N" Position, Vehicle Moves", AT-211.
No ▶	GO TO 5.

5	CHECK SHIFT SHOCK

1. Apply foot brake.
2. Move selector lever to "R" position.
3. Is there large shock when changing from "N" to "R" position?

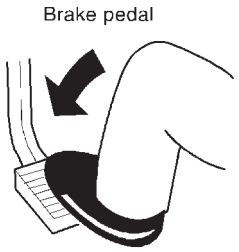

SAT082J

Yes or No

Yes	▶	Go to "5. Large Shock. "N" → "R" Position", AT-213.
No	▶	GO TO 6.

6	CHECK VEHICLE MOVE

1. Release foot brake for several seconds.
2. Does vehicle creep backward when foot brake is released?

Yes or No

Yes	▶	GO TO 7.
No	▶	Go to "6. Vehicle Does Not Creep Backward In "R" Position", AT-215.

7	CHECK VEHICLE MOVE

1. Move selector lever to "D", "2" and "1" position and check if vehicle creeps forward.
2. Does vehicle creep forward in all three positions?

Yes or No

Yes	▶	Go to "3. Cruise test", AT-67.
No	▶	Go to "7. Vehicle Does Not Creep Forward In "D", "2" Or "1" Position", AT-218.

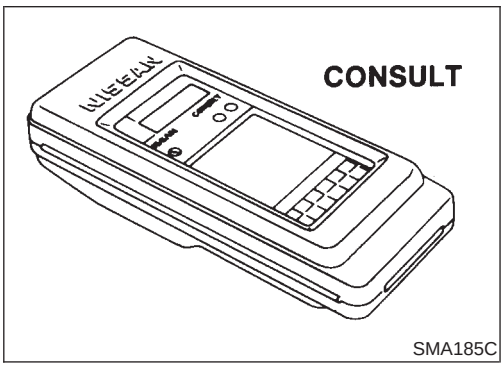

SMA185C

3. CRUISE TEST

NBAT0024S04

- Check all items listed in Parts 1 through 3.

With CONSULT

NBAT0024S0401

- Using CONSULT, conduct a cruise test and record the result.
- Print the result and ensure that shifts and lock-ups take place as per "Shift Schedule".

CONSULT Setting Procedure

NBAT0024S0402

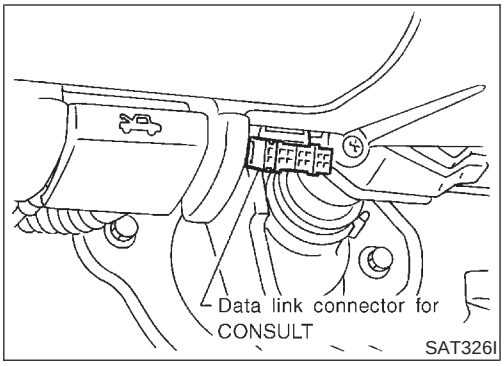

1. Turn ignition switch "OFF".
2. Connect "CONSULT" to Data link connector for CONSULT. Data link connector for CONSULT is located in instrument lower panel on driver side.

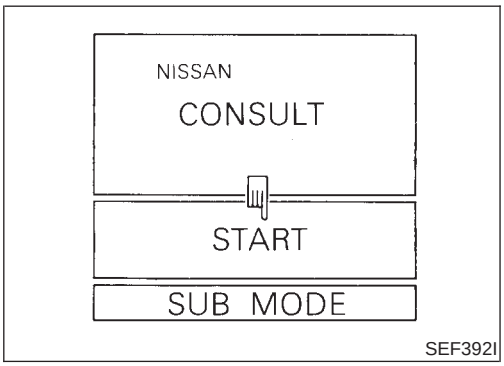

3. Turn ignition switch "ON".
4. Touch "START".

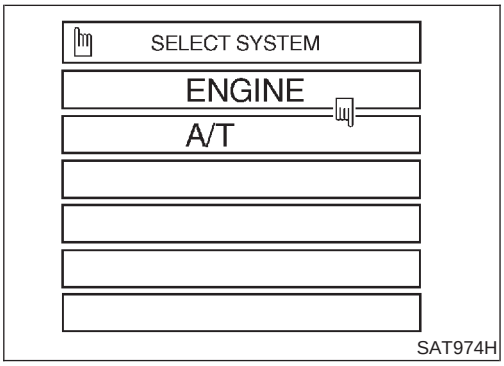

5. Touch "A/T".

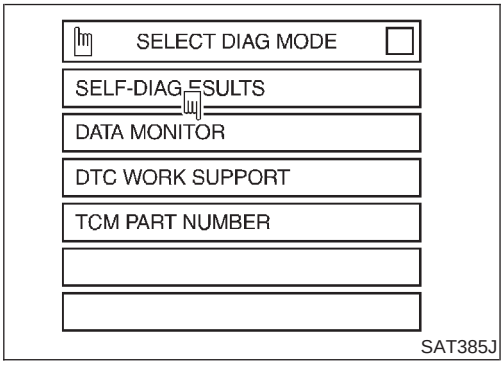

6. Touch "DATA MONITOR".

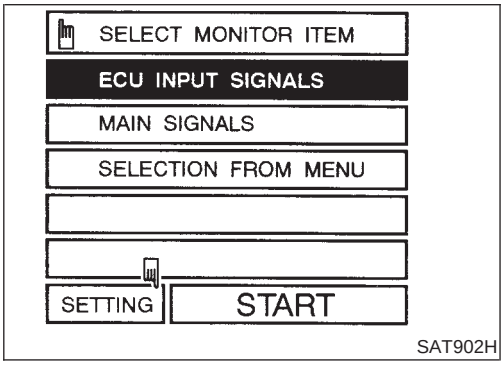

7. Touch "SETTING" to set recording condition.

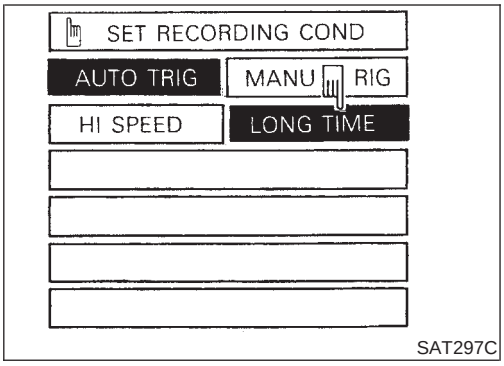

SAT297C

8. Touch "LONG TIME" and "ENTER" key.

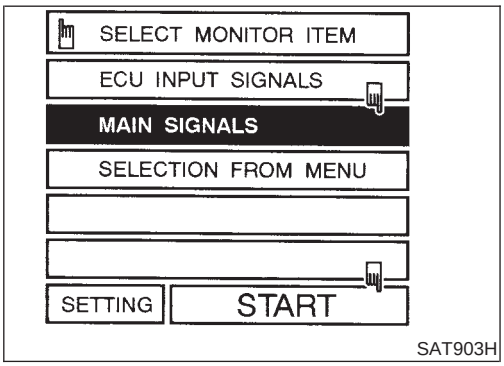

SAT903H

9. Go back to SELECT MONITOR ITEM and touch "MAIN SIGNALS".
10. Touch "START".

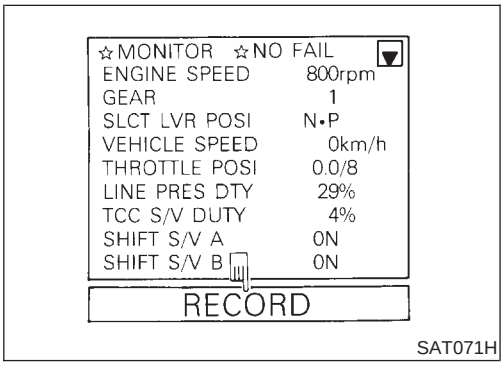

SAT071H

11. When performing cruise test, touch "RECORD".

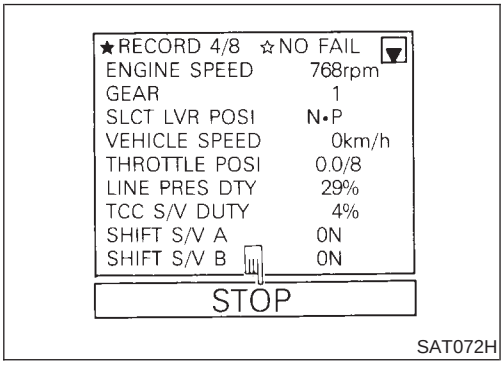

SAT072H

12. After finishing cruise test part 1, touch "STOP".

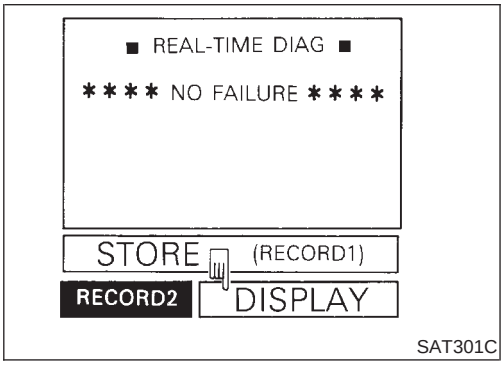

SAT301C

13. Touch "DISPLAY".

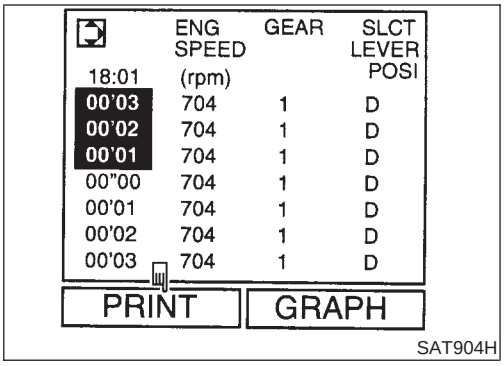

14. Touch "PRINT".

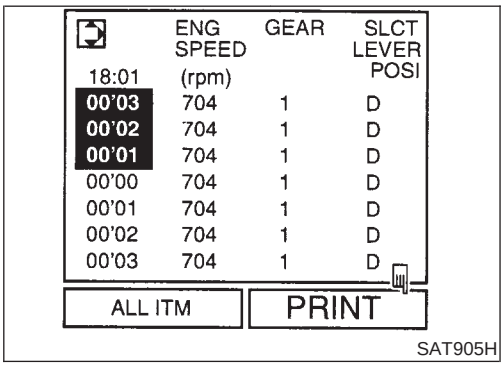

15. Touch "PRINT" again.

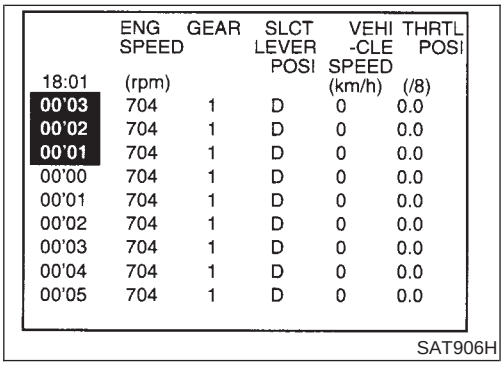

16. Check the monitor data printed out.
17. Continue cruise test part 2 and 3.

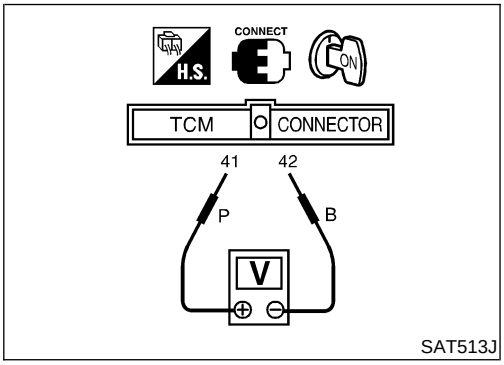

Without CONSULT

NBAT0024S0403

- Throttle position sensor can be checked by voltage across terminals 41 and 42 of TCM.

Cruise Test — Part 1

=NBAT0024S0404

1	CHECK STARTING GEAR (D_1) POSITION

1. Drive vehicle for approx. 10 minutes to warm engine oil and ATF up to operating temperature.
   ATF operating temperature:
   50 - 80°C (122 - 176°F)
2. Park vehicle on flat surface.
3. Set overdrive control switch to "ON" position.
4. Move selector lever to "P" position.

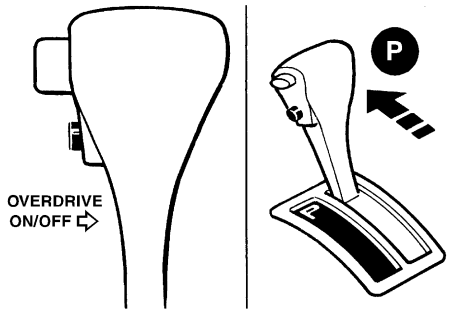

SAT001J

5. Start engine.
6. Move selector lever to "D" position.

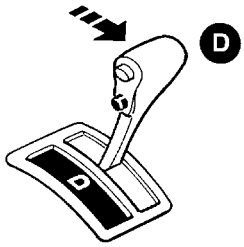

SAT952I

7. Accelerate vehicle by constantly depressing accelerator pedal halfway.

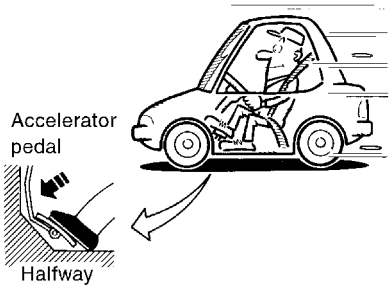

SAT953I

8. Does vehicle start from D_1?
   Read gear position.

Yes or No

Yes	▶	GO TO 2.
No	▶	Go to "8. Vehicle Cannot Be Started From D_1", AT-221.

2	CHECK SHIFT UP (D_1 TO D_2)

Does A/T shift from D_1 to D_2 at the specified speed?

Read gear position, throttle opening and vehicle speed.

Specified speed when shifting from D_1 to D_2:

Refer to Shift schedule, AT-339.

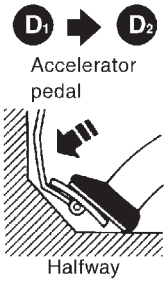

SAT954I

Yes or No

Yes	▶	GO TO 3.
No	▶	Go to "9. A/T Does Not Shift: $D_1 \rightarrow D_2$ or Does Not Kickdown: $D_4 \rightarrow D_2$", AT-224.

3	CHECK SHIFT UP (D_2 TO D_3)

Does A/T shift from D_2 to D_3 at the specified speed?

Read gear position, throttle opening and vehicle speed.

Specified speed when shifting from D_2 to D_3:

Refer to Shift schedule, AT-339.

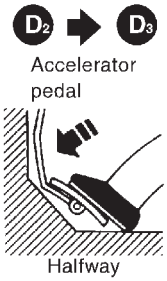

SAT955I

Yes or No

Yes	▶	GO TO 4.
No	▶	Go to "10. A/T Does Not Shift: $D_2 \rightarrow D_3$", AT-227.

4	CHECK SHIFT UP (D_3 TO D_4)

Does A/T shift from D_3 to D_4 at the specified speed?

Read gear position, throttle opening and vehicle speed.

Specified speed when shifting from D_3 to D_4:

Refer to Shift schedule, AT-339.

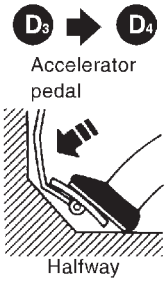

SAT956I

Yes or No

Yes	▶	GO TO 5.
No	▶	Go to "11. A/T Does Not Shift: $D_3 \rightarrow D_4$", AT-230.

5	CHECK LOCK-UP (D_4 TO D_4 L/U)

Does A/T perform lock-up at the specified speed?

Read vehicle speed, throttle position when lock-up duty becomes 94%.

Specified speed when lock-up occurs:

Refer to Shift schedule, AT-339.

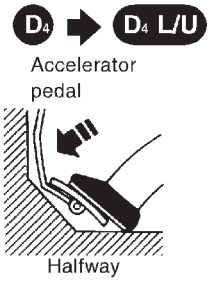

SAT957I

Yes or No

Yes	▶	GO TO 6.
No	▶	Go to "12. A/T Does Not Perform Lock-up", AT-233.

6	CHECK HOLD LOCK-UP

Does A/T hold lock-up condition for more than 30 seconds?

Yes or No

Yes	▶	GO TO 7.
No	▶	Go to "13. A/T Does Not Hold Lock-up Condition", AT-235.

7	CHECK LOCK-UP OFF (D_4 L/U TO D_4)

1. Release accelerator pedal.
2. Is lock-up released when accelerator pedal is released?

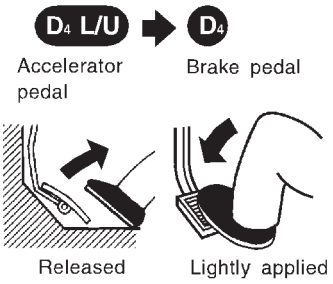

SAT958I

Yes or No

Yes	▶	GO TO 8.
No	▶	Go to "14. Lock-up Is Not Released", AT-237.

8	CHECK SHIFT DOWN (D_4 TO D_3)

1. Decelerate vehicle by applying foot brake lightly.
2. Does engine speed return to idle smoothly when A/T is shifted from D_4 to D_3?

Read gear position and engine speed.

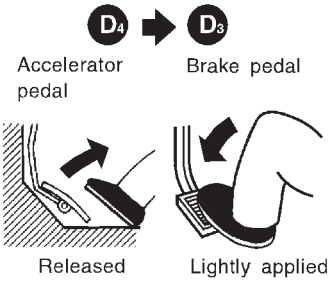

SAT959I

Yes or No

Yes	▶	1. Stop vehicle. 2. Go to "Cruise test — Part 2", AT-75.
No	▶	Go to "15. Engine Speed Does Not Return To Idle (Light Braking $D_4 \rightarrow D_3$)", AT-238.

Cruise Test — Part 2

=NBAT0024S0405

1	CHECK STARTING GEAR (D_1) POSITION

1. Confirm overdrive control switch is in "ON" position.
2. Confirm selector lever is in "D" position.
3. Accelerate vehicle by half throttle again.
4. Does vehicle start from D_1?

Read gear position.

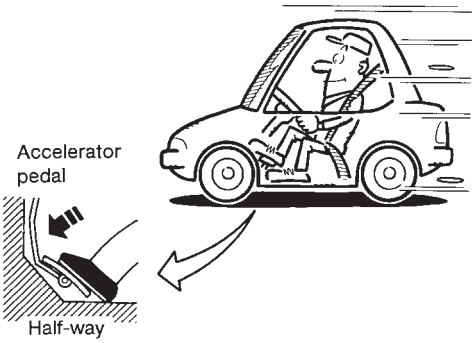

SAT495G

Yes or No

Yes	▶	GO TO 2.
No	▶	Go to "16. Vehicle Does Not Start From D_1", AT-240.

2	CHECK SHIFT UP AND SHIFT DOWN (D_3 TO D_4 TO D_2)

1. Accelerate vehicle to 80 km/h (50 MPH) as shown in illustration.
2. Release accelerator pedal and then quickly depress it fully.
3. Does A/T shift from D_4 to D_2 as soon as accelerator pedal is depressed fully?

Read gear position and throttle position.

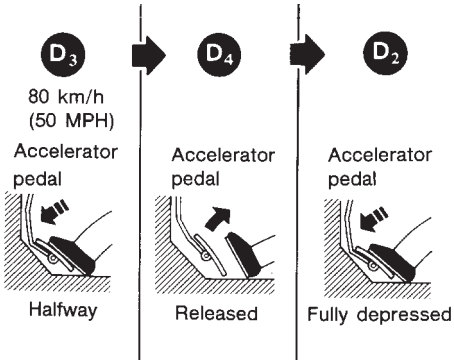

SAT404H

Yes or No

Yes	▶	GO TO 3.
No	▶	Go to "9. A/T Does Not Shift: $D_3 \rightarrow D_4$ Or Does Not Kickdown: $D_4 \rightarrow D_2$", AT-224.

3	CHECK SHIFT UP (D_2 TO D_3)

Does A/T shift from D_2 to D_3 at the specified speed?

Read gear position, throttle position and vehicle speed.

Specified speed when shifting from D_2 to D_3:

Refer to Shift schedule, AT-339.

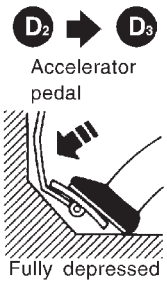

SAT960I

Yes or No

Yes	▶	GO TO 4.
No	▶	Go to "10. A/T Does Not Shift: $D_2 \rightarrow D_3$", AT-227.

4	CHECK SHIFT UP (D_3 TO D_4) AND ENGINE BRAKE

Release accelerator pedal after shifting from D_2 to D_3.

Does A/T shift from D_3 to D_4 and does vehicle decelerate by engine brake?

Read gear position, throttle position and vehicle speed.

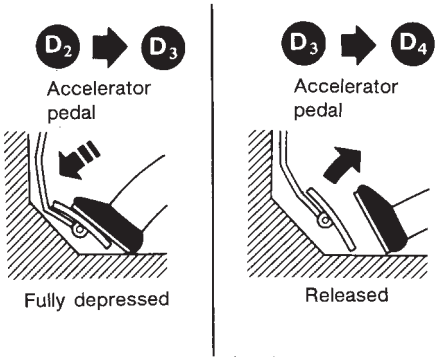

SAT405H

Yes or No

Yes	▶	1. Stop vehicle. 2. Go to "Cruise test — Part 3", AT-77.
No	▶	Go to "11. A/T Does Not Shift: $D_3 \rightarrow D_4$", AT-230.

Cruise Test — Part 3

=NBAT0024S0406

1	VEHICLE SPEED D_4 POSITION

1. Confirm overdrive control switch is in "ON" position.
2. Confirm selector lever is in "D" position.
3. Accelerate vehicle using half-throttle to D_4.

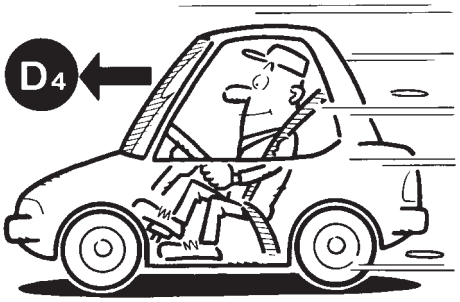

SAT812A

▶	GO TO 2.

2	CHECK SHIFT DOWN (D_4 TO D_3)

1. Release accelerator pedal.
2. Set overdrive control switch to "OFF" position while driving in D_4.
3. Does A/T shift from D_4 to D_3 (O/D OFF)?

Read gear position and vehicle speed.

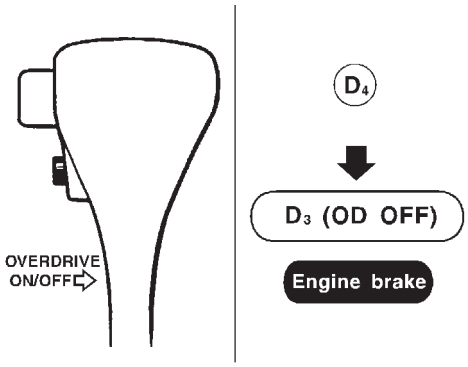

SAT999I

Yes or No

Yes	▶	GO TO 3.
No	▶	Go to "17. A/T Does Not Shift: $D_4 \rightarrow D_3$, When Overdrive Control Switch "ON" → "OFF", AT-241.

3	CHECK ENGINE BRAKE

Does vehicle decelerate by engine brake?

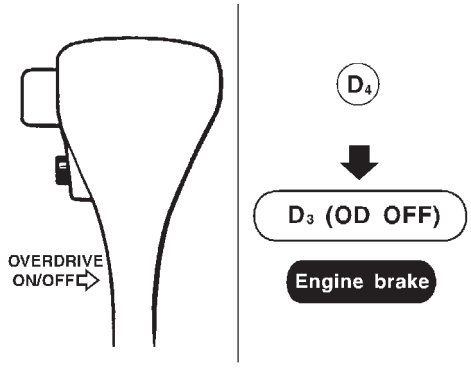

SAT999I

Yes or No

Yes	▶	GO TO 4.
No	▶	Go to "15. Engine Speed Does Not Return To Idle (Light Braking $D_4 \rightarrow D_3$)", AT-238.

4	CHECK SHIFT DOWN (D_3 TO D_2)

1. Move selector lever from "D" to "2" position while driving in D_3 (O/D OFF).
2. Does A/T shift from D_3 (O/D OFF) to 2_2?

Read gear position.

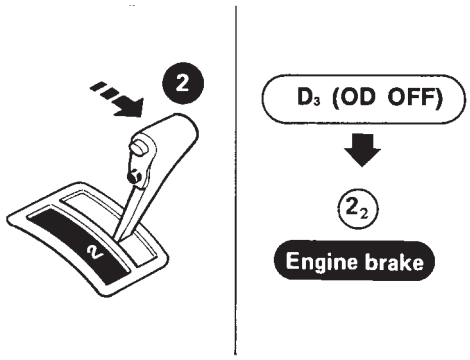

SAT791GA

Yes or No

Yes	▶	GO TO 5.
No	▶	Go to "18. A/T Does Not Shift: $D_3 \rightarrow D_2$, When Selector Lever "D" → "2" Position", AT-242.

5	CHECK ENGINE BRAKE

Does vehicle decelerate by engine brake?

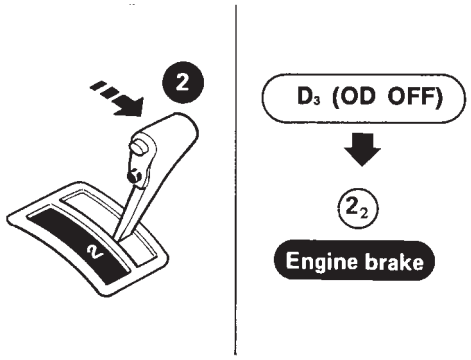

SAT791GA

Yes or No

Yes	▶	GO TO 6.
No	▶	Go to "15. Engine Speed Does Not Return To Idle (Light Braking $D_4 \rightarrow D_3$)", AT-238.

6	CHECK SHIFT DOWN (2_2 TO 1_1)

1. Move selector lever from "2" to "1" position while driving in 2_2.
2. Does A/T shift from 2_2 to 1_1 position?

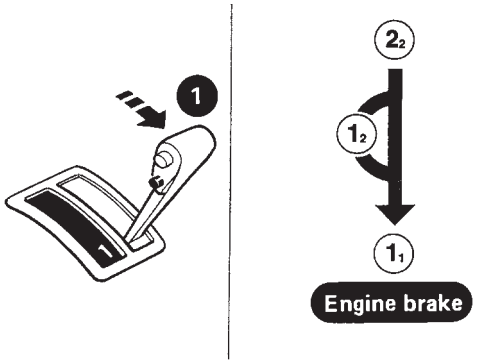

SAT778B

Yes or No

Yes	▶	GO TO 7.
No	▶	Go to "19. A/T Does Not Shift: $2_2 \rightarrow 1_1$, When Selector lever "2" → "1" Position", AT-243.

7	CHECK ENGINE BRAKE
Does vehicle decelerate by engine brake?	

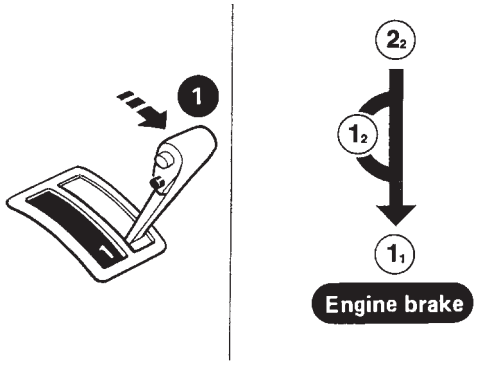

SAT778B

Yes or No

Yes	▶	1. Stop vehicle. 2. Perform self-diagnosis. Refer to TCM SELF-DIAGNOSTIC PROCEDURE (No Tools), AT-46.
No	▶	Go to "20. Vehicle Does Not Decelerate By Engine Brake", AT-244.

Symptom Chart

NBAT0026

Numbers are arranged in the order of inspection.
Perform inspections starting with number one and work up.

Symptom	Condition	Diagnostic Item	Reference Page
Engine does not start in “N”, “P” positions. AT-209	ON vehicle	1. Ignition switch and starter	EL-9, “Schematic” and SC-6, “System Description”
		2. Control linkage	AT-261
		3. PNP switch	AT-260
Engine starts in position other than “N” and “P” positions. AT-209	ON vehicle	1. Control linkage	AT-261
		2. PNP switch	AT-260
Transmission noise in “P” and “N” positions.	ON vehicle	1. Fluid level	AT-59
		2. Line pressure	AT-62
		3. Throttle position sensor (Adjustment)	EC-181, “Description”
		4. Revolution sensor and vehicle speed sensor	AT-110, AT-195
		5. Engine speed signal	AT-115
	OFF vehicle	6. Oil pump	AT-280
		7. Torque converter	AT-269
Vehicle moves when changing into “P” position or parking gear does not disengage when shifted out of “P” position. AT-209	ON vehicle	1. Control linkage	AT-261
	OFF vehicle	2. Parking components	AT-320
Vehicle runs in “N” position. AT-211	ON vehicle	1. Control linkage	AT-261
		2. Accumulator 3-4 (N-R)	AT-259
	OFF vehicle	3. Forward clutch	AT-303
		4. Reverse clutch	AT-297
		5. Overrun clutch	AT-303
Vehicle will not run in “R” position (but runs in “D”, “2” and “1” positions). Clutch slips. Very poor acceleration. AT-215	ON vehicle	1. Control linkage	AT-261
		2. Line pressure	AT-62
		3. Line pressure solenoid valve	AT-161
		4. Control valve assembly	AT-259
	OFF vehicle	5. Reverse clutch	AT-297
		6. High clutch	AT-301
		7. Forward clutch	AT-303
		8. Overrun clutch	AT-303
		9. Low & reverse brake	AT-307

Symptom Chart (Cont'd)

Symptom	Condition	Diagnostic Item	Reference Page
Vehicle braked when shifting into "R" position.	ON vehicle	1. Fluid level	AT-59
		2. Control linkage	AT-261
		3. Line pressure	AT-62
		4. Line pressure solenoid valve	AT-161
		5. Control valve assembly	AT-259
	OFF vehicle	6. High clutch	AT-301
		7. Brake band	AT-316
		8. Forward clutch	AT-303
		9. Overrun clutch	AT-303
Sharp shock in shifting from "N" to "D" position.	ON vehicle	1. Engine idling rpm	AT-62
		2. Throttle position sensor (Adjustment)	EC-181, "Description"
		3. Line pressure	AT-62
		4. A/T fluid temperature sensor	AT-105
		5. Engine speed signal	AT-115
		6. Line pressure solenoid valve	AT-161
		7. Control valve assembly	AT-259
		8. Accumulator N-D	AT-259
	OFF vehicle	9. Forward clutch	AT-303
Vehicle will not run in "D" and "2" positions (but runs in "1" and "R" positions).	ON vehicle	1. Control linkage	AT-261
	OFF vehicle	2. Low one-way clutch	AT-311
Vehicle will not run in "D", "1", "2" positions (but runs in "R" position). Clutch slips. Very poor acceleration. AT-218	ON vehicle	1. Fluid level	AT-59
		2. Line pressure	AT-62
		3. Line pressure solenoid valve	AT-161
		4. Control valve assembly	AT-259
		5. Accumulator N-D	AT-259
	OFF vehicle	6. Reverse clutch	AT-297
		7. High clutch	AT-301
		8. Forward clutch	AT-303
		9. Forward one-way clutch	AT-303
		10. Low one-way clutch	AT-311

Symptom Chart (Cont'd)

Symptom	Condition	Diagnostic Item	Reference Page
Clutches or brakes slip somewhat in starting.	ON vehicle	1. Fluid level	AT-59
		2. Control linkage	AT-261
		3. Throttle position sensor (Adjustment)	EC-181, "Description"
		4. Line pressure	AT-62
		5. Line pressure solenoid valve	AT-161
		6. Control valve assembly	AT-259
		7. Accumulator N-D	AT-259
		8. Accumulator 3-4 (N-R)	AT-259
	OFF vehicle	9. Forward clutch	AT-303
		10. Reverse clutch	AT-297
		11. Low & reverse brake	AT-307
		12. Oil pump	AT-280
		13. Torque converter	AT-269
Excessive creep.	ON vehicle	1. Engine idling rpm	EC-181, "Description"
No creep at all. AT-215, AT-218	ON vehicle	1. Fluid level	AT-59
		2. Line pressure	AT-62
		3. Control valve assembly	AT-259
	OFF vehicle	4. Forward clutch	AT-303
		5. Oil pump	AT-280
		6. Torque converter	AT-269
Failure to change gear from "D_1" to "D_2".	ON vehicle	1. PNP switch	AT-260
		2. Control linkage	AT-261
		3. Shift solenoid valve A	AT-167
		4. Control valve assembly	AT-259
		5. Revolution sensor and speed sensor	AT-110, AT-195
	OFF vehicle	6. Brake band	AT-316
Failure to change gear from "D_2" to "D_3".	ON vehicle	1. PNP switch	AT-260
		2. Control linkage	AT-261
		3. Shift solenoid valve B	AT-171
		4. Control valve assembly	AT-259
		5. Revolution sensor and speed sensor	AT-105, AT-195
	OFF vehicle	6. High clutch	AT-301
		7. Brake band	AT-316

Symptom Chart (Cont'd)

Symptom	Condition	Diagnostic Item	Reference Page
Failure to change gear from "D_3" to "D_4".	ON vehicle	1. PNP switch	AT-260
		2. Control linkage	AT-261
		3. Shift solenoid valve A	AT-167
		4. Revolution sensor and speed sensor	AT-110, AT-195
		5. A/T fluid temperature sensor	AT-105
	OFF vehicle	6. Brake band	AT-316
Too high a gear change point from "D_1" to "D_2", from "D_2" to "D_3", from "D_3" to "D_4". AT-224, AT-227, AT-230	ON vehicle	1. Throttle position sensor (Adjustment)	EC-181, "Description"
		2. Revolution sensor and speed sensor	AT-110, AT-195
		3. Shift solenoid valve A	AT-167
		4. Shift solenoid valve B	AT-171
Gear change directly from "D_1" to "D_3" occurs.	ON vehicle	1. Fluid level	AT-59
		2. Accumulator 1-2	AT-259
	OFF vehicle	3. Brake band	AT-316
Engine stops when shifting lever into "R", "D", "2" and "1".	ON vehicle	1. Engine idling rpm	AT-62
		2. Torque converter clutch solenoid valve	AT-147
		3. Control valve assembly	AT-259
	OFF vehicle	4. Torque converter	AT-269
Too sharp a shock in change from "D_1" to "D_2".	ON vehicle	1. Throttle position sensor (Adjustment)	EC-181, "Description"
		2. Line pressure	AT-62
		3. Accumulator 1-2	AT-259
		4. Control valve assembly	AT-259
		5. A/T fluid temperature sensor	AT-105
	OFF vehicle	6. Brake band	AT-316
Too sharp a shock in change from "D_2" to "D_3".	ON vehicle	1. Throttle position sensor (Adjustment)	EC-181, "Description"
		2. Line pressure	AT-62
		3. Accumulator 2-3	AT-259
		4. Control valve assembly	AT-259
	OFF vehicle	5. High clutch	AT-301
		6. Brake band	AT-316
Too sharp a shock in change from "D_3" to "D_4".	ON vehicle	1. Throttle position sensor (Adjustment)	EC-181, "Description"
		2. Line pressure	AT-62
		3. Accumulator 3-4 (N-R)	AT-259
		4. Control valve assembly	AT-259
	OFF vehicle	5. Brake band	AT-316
		6. Overrun clutch	AT-303

Symptom Chart (Cont'd)

Symptom	Condition	Diagnostic Item	Reference Page
Almost no shock or clutches slipping in change from "D_1" to "D_2".	ON vehicle	1. Fluid level	AT-59
		2. Throttle position sensor (Adjustment)	EC-181, "Description"
		3. Line pressure	AT-62
		4. Accumulator 1-2	AT-259
		5. Control valve assembly	AT-259
	OFF vehicle	6. Brake band	AT-316
Almost no shock or slipping in change from "D_2" to "D_3".	ON vehicle	1. Fluid level	AT-59
		2. Throttle position sensor (Adjustment)	EC-181, "Description"
		3. Line pressure	AT-62
		4. Accumulator 2-3	AT-259
		5. Control valve assembly	AT-259
	OFF vehicle	6. High clutch	AT-301
		7. Brake band	AT-316
Almost no shock or slipping in change from "D_3" to "D_4".	ON vehicle	1. Fluid level	AT-59
		2. Throttle position sensor (Adjustment)	EC-181, "Description"
		3. Line pressure	AT-62
		4. Accumulator 3-4 (N-R)	AT-259
		5. Control valve assembly	AT-259
	OFF vehicle	6. High clutch	AT-301
		7. Brake band	AT-316
Vehicle braked by gear change from "D_1" to "D_2".	ON vehicle	1. Fluid level	AT-59
	OFF vehicle	2. Reverse clutch	AT-297
		3. Low & reverse brake	AT-307
		4. High clutch	AT-301
		5. Low one-way clutch	AT-311
Vehicle braked by gear change from "D_2" to "D_3".	ON vehicle	1. Fluid level	AT-59
	OFF vehicle	2. Brake band	AT-316
Vehicle braked by gear change from "D_3" to "D_4".	ON vehicle	1. Fluid level	AT-59
	OFF vehicle	2. Overrun clutch	AT-303
		3. Forward one-way clutch	AT-303
		4. Reverse clutch	AT-297

Symptom Chart (Cont'd)

Symptom	Condition	Diagnostic Item	Reference Page
Maximum speed not attained. Acceleration poor.	ON vehicle	1. Fluid level	AT-59
		2. PNP switch	AT-260
		3. Shift solenoid valve A	AT-167
		4. Shift solenoid valve B	AT-171
		5. Control valve assembly	AT-259
	OFF vehicle	6. Reverse clutch	AT-297
		7. High clutch	AT-301
		8. Brake band	AT-316
		9. Low & reverse brake	AT-307
		10. Oil pump	AT-280
		11. Torque converter	AT-269
Failure to change gear from "D_4" to "D_3".	ON vehicle	1. Fluid level	AT-59
		2. Throttle position sensor (Adjustment)	EC-181, "Description"
		3. Overrun clutch solenoid valve	AT-184
		4. Shift solenoid valve A	AT-167
		5. Line pressure solenoid valve	AT-161
		6. Control valve assembly	AT-259
	OFF vehicle	7. Low & reverse brake	AT-307
		8. Overrun clutch	AT-303
Failure to change gear from "D_3" to "D_2" or from "D_4" to "D_2".	ON vehicle	1. Fluid level	AT-59
		2. Throttle position sensor (Adjustment)	EC-181, "Description"
		3. Shift solenoid valve A	AT-167
		4. Shift solenoid valve B	AT-171
		5. Control valve assembly	AT-259
	OFF vehicle	6. High clutch	AT-301
		7. Brake band	AT-316
Failure to change gear from "D_2" to "D_1" or from "D_3" to "D_1".	ON vehicle	1. Fluid level	AT-59
		2. Throttle position sensor (Adjustment)	EC-181, "Description"
		3. Shift solenoid valve A	AT-167
		4. Shift solenoid valve B	AT-171
		5. Control valve assembly	AT-259
	OFF vehicle	6. Low one-way clutch	AT-311
		7. High clutch	AT-301
		8. Brake band	AT-316
Gear change shock felt during deceleration by releasing accelerator pedal.	ON vehicle	1. Throttle position sensor (Adjustment)	EC-181, "Description"
		2. Line pressure	AT-62
		3. Overrun clutch solenoid valve	AT-184
		4. Control valve assembly	AT-259

Symptom Chart (Cont'd)

Symptom	Condition	Diagnostic Item	Reference Page
Too high a change point from "D_4" to "D_3", from "D_3" to "D_2", from "D_2" to "D_1".	ON vehicle	1. Throttle position sensor (Adjustment)	EC-181, "Description"
		2. Revolution sensor and speed sensor	AT-110, AT-195
Kickdown does not operate when depressing pedal in "D_4" within kick-down vehicle speed.	ON vehicle	1. Throttle position sensor (Adjustment)	EC-181, "Description"
		2. Revolution sensor and speed sensor	AT-110, AT-195
		3. Shift solenoid valve A	AT-167
		4. Shift solenoid valve B	AT-171
Kickdown operates or engine overruns when depressing pedal in "D_4" beyond kickdown vehicle speed limit.	ON vehicle	1. Revolution sensor and speed sensor	AT-110, AT-195
		2. Throttle position sensor (Adjustment)	EC-181, "Description"
		3. Shift solenoid valve A	AT-167
		4. Shift solenoid valve B	AT-171
Races extremely fast or slips in changing from "D_4" to "D_3" when depressing pedal.	ON vehicle	1. Fluid level	AT-59
		2. Throttle position sensor (Adjustment)	EC-181, "Description"
		3. Line pressure	AT-62
		4. Line pressure solenoid valve	AT-161
		5. Control valve assembly	AT-259
	OFF vehicle	6. High clutch	AT-301
		7. Forward clutch	AT-303
Races extremely fast or slips in changing from "D_4" to "D_2" when depressing pedal.	ON vehicle	1. Fluid level	AT-59
		2. Throttle position sensor (Adjustment)	EC-181, "Description"
		3. Line pressure	AT-62
		4. Line pressure solenoid valve	AT-161
		5. Shift solenoid valve A	AT-167
		6. Control valve assembly	AT-259
	OFF vehicle	7. Brake band	AT-316
		8. Forward clutch	AT-303
Races extremely fast or slips in changing from "D_3" to "D_2" when depressing pedal.	ON vehicle	1. Fluid level	AT-59
		2. Throttle position sensor (Adjustment)	EC-181, "Description"
		3. Line pressure	AT-62
		4. Line pressure solenoid valve	AT-161
		5. Control valve assembly	AT-259
		6. A/T fluid temperature sensor	AT-105
		7. Accumulator 2-3	AT-259
	OFF vehicle	8. Brake band	AT-316
		9. Forward clutch	AT-303
		10. High clutch	AT-301

Symptom Chart (Cont'd)

Symptom	Condition	Diagnostic Item	Reference Page
Races extremely fast or slips in changing from "D_4" or "D_3" to "D_1" when depressing pedal.	ON vehicle	1. Fluid level	AT-59
		2. Throttle position sensor (Adjustment)	EC-181, "Description"
		3. Line pressure	AT-62
		4. Line pressure solenoid valve	AT-161
		5. Control valve assembly	AT-259
	OFF vehicle	6. Forward clutch	AT-303
		7. Forward one-way clutch	AT-303
		8. Low one-way clutch	AT-311
Vehicle will not run in any position.	ON vehicle	1. Fluid level	AT-59
		2. Control linkage	AT-261
		3. Line pressure	AT-62
		4. Line pressure solenoid valve	AT-161
	OFF vehicle	5. Oil pump	AT-280
		6. High clutch	AT-301
		7. Brake band	AT-316
		8. Low & reverse brake	AT-307
		9. Torque converter	AT-269
Transmission noise in "D", "2", "1" and "R" positions.	ON vehicle	1. Fluid level	AT-59
	OFF vehicle	2. Torque converter	AT-269
Failure to change from "D_3" to "2" when changing lever into "2" position. AT-238	ON vehicle	1. PNP switch	AT-260
		2. Throttle position sensor (Adjustment)	EC-181, "Description"
		3. Torque converter clutch solenoid valve	AT-147
		4. Shift solenoid valve B	AT-171
		5. Shift solenoid valve A	AT-167
		6. Control valve assembly	AT-259
		7. Control linkage	AT-261
	OFF vehicle	8. Brake band	AT-316
		9. Overrun clutch	AT-303
Gear change from "2_2" to "2_3" in "2" position.	ON vehicle	1. PNP switch	AT-260

Symptom Chart (Cont'd)

Symptom	Condition	Diagnostic Item	Reference Page
Engine brake does not operate in "1" position. AT-240	ON vehicle	1. PNP switch	AT-260
		2. Control linkage	AT-261
		3. Throttle position sensor (Adjustment)	EC-181, "Description"
		4. Revolution sensor and speed sensor	AT-105, AT-195
		5. Shift solenoid valve A	AT-167
		6. Control valve assembly	AT-259
		7. Overrun clutch solenoid valve	AT-184
	OFF vehicle	8. Overrun clutch	AT-303
		9. Low & reverse brake	AT-307
Gear change from "1_1" to "1_2" in "1" position.	ON vehicle	1. PNP switch	AT-260
		2. Control linkage	AT-261
Does not change from "1_2" to "1_1" in "1" position.	ON vehicle	1. PNP switch	AT-260
		2. Revolution sensor and speed sensor	AT-110, AT-195
		3. Shift solenoid valve A	AT-167
		4. Control valve assembly	AT-259
		5. Overrun clutch solenoid valve	AT-184
	OFF vehicle	6. Overrun clutch	AT-303
		7. Low & reverse brake	AT-307
Large shock changing from "1_2" to "1_1" in "1" position.	ON vehicle	1. Control valve assembly	AT-259
	OFF vehicle	2. Low & reverse brake	AT-307
Transmission overheats.	ON vehicle	1. Fluid level	AT-59
		2. Engine idling rpm	AT-62
		3. Throttle position sensor (Adjustment)	EC-181, "Description"
		4. Line pressure	AT-62
		5. Line pressure solenoid valve	AT-161
		6. Control valve assembly	AT-259
	OFF vehicle	7. Oil pump	AT-280
		8. Reverse clutch	AT-297
		9. High clutch	AT-301
		10. Brake band	AT-316
		11. Forward clutch	AT-303
		12. Overrun clutch	AT-303
		13. Low & reverse brake	AT-307
		14. Torque converter	AT-269

Symptom Chart (Cont'd)

Symptom	Condition	Diagnostic Item	Reference Page
ATF shoots out during operation. White smoke emitted from exhaust pipe during operation.	ON vehicle	1. Fluid level	AT-59
	OFF vehicle	2. Reverse clutch	AT-297
		3. High clutch	AT-301
		4. Brake band	AT-316
		5. Forward clutch	AT-303
		6. Overrun clutch	AT-303
		7. Low & reverse brake	AT-307
Offensive smell at fluid charging pipe.	ON vehicle	1. Fluid level	AT-59
	OFF vehicle	2. Torque converter	AT-269
		3. Oil pump	AT-280
		4. Reverse clutch	AT-297
		5. High clutch	AT-301
		6. Brake band	AT-316
		7. Forward clutch	AT-303
		8. Overrun clutch	AT-303
		9. Low & reverse brake	AT-307
Torque converter is not locked up.	ON vehicle	1. Throttle position sensor (Adjustment)	EC-181, "Description"
		2. Revolution sensor and speed sensor	AT-110, AT-195
		3. PNP switch	AT-260
		4. Engine speed signal	AT-115
		5. A/T fluid temperature sensor	AT-105
		6. Line pressure	AT-62
		7. Torque converter clutch solenoid valve	AT-147
		8. Control valve assembly	AT-259
	OFF vehicle	9. Torque converter	AT-269
Torque converter clutch piston slip.	ON vehicle	1. Fluid level	AT-59
		2. Line pressure	AT-62
		3. Torque converter clutch solenoid valve	AT-147
		4. Line pressure solenoid valve	AT-161
		5. Line pressure solenoid valve	AT-161
		6. Control valve assembly	AT-259
	OFF vehicle	7. Torque converter	AT-269
Lock-up point is extremely high or low. AT-233	ON vehicle	1. Throttle position sensor (Adjustment)	EC-181, "Description"
		2. Revolution sensor and speed sensor	AT-110, AT-195
		3. Torque converter clutch solenoid valve	AT-147
		4. Control valve assembly	AT-259

Symptom Chart (Cont'd)

Symptom	Condition	Diagnostic Item	Reference Page
A/T does not shift to "D_4" when driving with overdrive control switch "ON".	ON vehicle	1. Throttle position sensor (Adjustment)	EC-181, "Description"
		2. PNP switch	AT-260
		3. Revolution sensor and speed sensor	AT-110, AT-195
		4. Shift solenoid valve A	AT-167
		5. Overrun clutch solenoid valve	AT-184
		6. Control valve assembly	AT-259
		7. A/T fluid temperature sensor	AT-105
		8. Line pressure	AT-62
	OFF vehicle	9. Brake band	AT-316
		10. Overrun clutch	AT-303
Engine is stopped at "R", "D", "2" and "1" positions.	ON vehicle	1. Fluid level	AT-59
		2. Torque converter clutch solenoid valve	AT-147
		3. Shift solenoid valve B	AT-171
		4. Shift solenoid valve A	AT-167
		5. Control valve assembly	AT-259

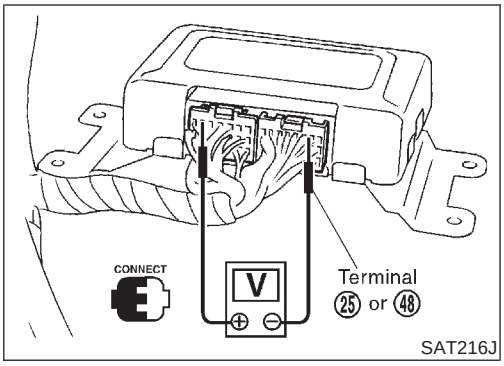

SAT216J

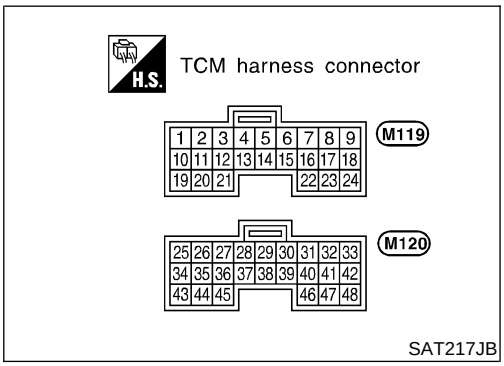

SAT217JB

TCM Terminals and Reference Value

=NBAT0027

PREPARATION

NBAT0027S01

- Measure voltage between each terminal and terminal 25 or 48 by following “TCM INSPECTION TABLE”.

TCM HARNESS CONNECTOR TERMINAL LAYOUT

NBAT0027S02

TCM INSPECTION TABLE

NBAT0027S03

(Data are reference values.)

Terminal No.	Wire color	Item	Condition		Judgement standard
1	G/Y	Line pressure solenoid valve	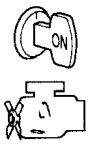	When releasing accelerator pedal after warming up engine.	1.5 - 3.0V
				When depressing accelerator pedal fully after warming up engine.	0.5V or less
2	BR/Y	Line pressure solenoid valve (with dropping resistor)		When releasing accelerator pedal after warming up engine.	5 - 14V
				When depressing accelerator pedal fully after warming up engine.	0.5V or less
3	G/OR	Torque converter clutch solenoid valve		When A/T performs lock-up.	8 - 15V
				When A/T does not perform lock- up.	1V or less
4	—	—	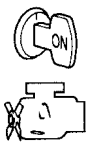	—	—
5*1	PU/W	DT1		—	—
6*1	P/B	DT2		—	—
7*1	P	DT3		—	—
8	—	—		—	—
9	—	—		—	—
10	W/R	Power source		When turning ignition switch to “ON”.	Battery voltage
				When turning ignition switch to “OFF”.	1V or less

Terminal No.	Wire color	Item	Condition		Judgement standard
11	L/W	Shift solenoid valve A		When shift solenoid valve A operates. (When driving in "D_1" or "D_4".)	Battery voltage
				When shift solenoid valve A does not operate. (When driving in "D_2" or "D_3".)	1V or less
12	L/R	Shift solenoid valve B		When shift solenoid valve B operates. (When driving in "D_1" or "D_2".)	Battery voltage
				When shift solenoid valve B does not operate. (When driving in "D_3" or "D_4".)	1V or less
13	GY	O/D OFF indicator lamp		When setting overdrive control switch in "ON" position.	Battery voltage
				When setting overdrive control switch in "OFF" position.	1V or less
14	—	—		—	—
15*1	Y/G	OBD-II output		—	—
16	OR/W	Closed throttle position switch (in throttle position switch)		When releasing accelerator pedal after warming up engine. Refer to "Preparation", "TCM SELF-DIAGNOSTIC PROCEDURE (No Tools)", AT-46.	Battery voltage
				When depressing accelerator pedal after warming up engine. Refer to "Preparation", "TCM SELF-DIAGNOSTIC PROCEDURE (No Tools)", AT-46.	1V or less
17	OR/B	Wide open throttle position switch (in throttle position switch)		When depressing accelerator pedal more than half-way after warming up engine.	Battery voltage
				When releasing accelerator pedal after warming up engine.	1V or less
18	B/Y	ASCD cruise signal		When ASCD cruise is being performed. ("CRUISE" light comes on.)	Battery voltage
				When ASCD cruise is not being performed. ("CRUISE" light does not comes on.)	1V or less
19	W/R	Power source		Same as No. 10	
20	L/B	Overrun clutch solenoid valve		When overrun clutch solenoid valve operates.	Battery voltage
				When overrun clutch solenoid valve does not operate.	1V or less
21	—	—		—	—
22	GY	Overdrive control switch		When setting overdrive control switch in "ON" position	Battery voltage
				When setting overdrive control switch in "OFF" position	1V or less
23	—	—		—	—

TCM Terminals and Reference Value (Cont'd)

Terminal No.	Wire color	Item	Condition		Judgement standard
24	W/G	ASCD OD cut signal		When "ACCEL" set switch on ASCD cruise is released.	More than 4.5V
				When "ACCEL" set switch on ASCD cruise is applied.	1V or less
25	B	Ground		—	—
26	G	PNP switch "1" position		When setting selector lever to "1" position.	Battery voltage
				When setting selector lever to other positions.	1V or less
27	G/W	PNP switch "2" position		When setting selector lever to "2" position.	Battery voltage
				When setting selector lever to other positions.	1V or less
28	R/Y	Power source (Memory back-up)	or	When turning ignition switch to "OFF".	Battery voltage
				When turning ignition switch to "ON".	Battery voltage
29	W	Revolution sensor (Measure in AC range)		When vehicle cruises at 30 km/h (19 MPH).	1V or more Voltage rises gradually in response to vehicle speed.
				When vehicle parks.	0V
30*2	W	—		—	—
31*2	L	—		—	—
32	P/B	Throttle position sensor (Power source)		—	4.5 - 5.5V
33	—	—		—	—
34	L	PNP switch "D" position		When setting selector lever to "D" position.	Battery voltage
				When setting selector lever to other positions.	1V or less
35	Y	PNP switch "R" position		When setting selector lever to "R" position.	Battery voltage
				When setting selector lever to other positions.	1V or less
36	P	PNP switch "N" or "P" position		When setting selector lever to "N" or "P" position.	Battery voltage
				When setting selector lever to other positions.	1V or less
37	—	—		—	—
38	—	—		—	—

Terminal No.	Wire color	Item	Condition		Judgement standard
39	W/B	Engine speed signal	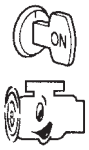	When engine runs at idle speed.	0.5 - 2.5V
40	W/L	Vehicle speed sensor		When moving vehicle at 2 to 3 km/h (1 to 2 MPH) for 1 m (3 ft) or more.	Voltage varies between less than 1.0V and more than 4.5V.
41	P	Throttle position sensor		When depressing accelerator pedal slowly after warming up engine. (Voltage rises gradually in response to throttle position.)	Fully-closed throttle: Approximately 0.5V Fully-open throttle: Approximately 4V
42	B	Throttle position sensor (Ground)		—	—
45	—	—		—	—
46	W	Vehicle speed signal (For transfer control unit)		When vehicle is running.	Outputs approx. 1V or 5V alternately.
				When vehicle is stopped.	Approximately 5V
47	R	A/T fluid temperature sensor		When ATF temperature is 20°C (68°F).	Approximately 1.5V
				When ATF temperature is 80°C (176°F).	Approximately 0.5V
48	B	Ground		—	—

*1: These terminals are connected to the ECM.

*2: These terminals are connected to the Data link connector for CONSULT.

Wiring Diagram — AT — MAIN

NBAT0185

AT-MAIN-01

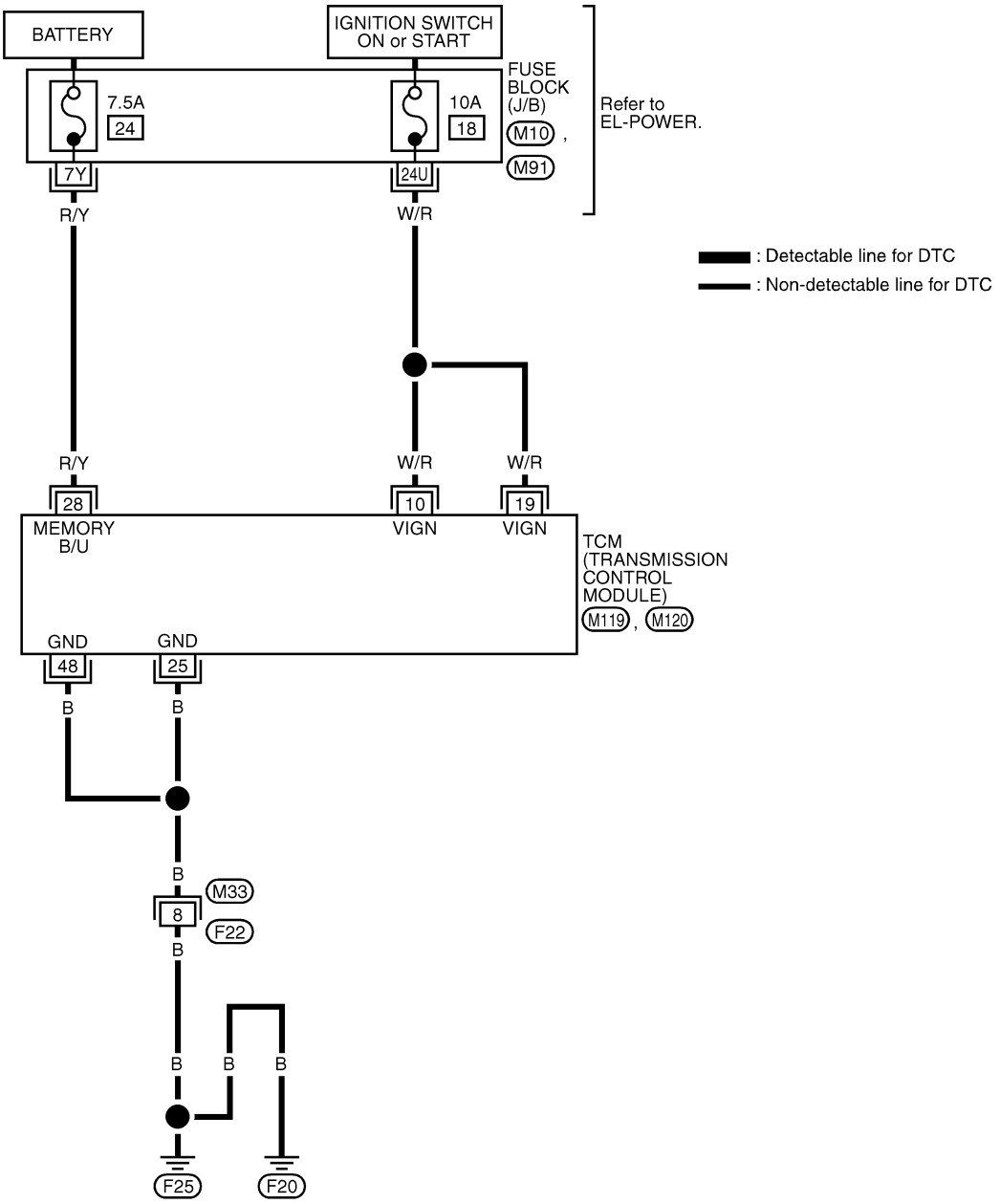

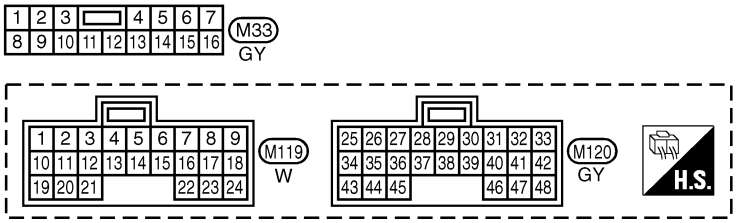

Refer to last page (Foldout page).

M10

M91

MAT726A

TCM TERMINALS AND REFERENCE VALUE

NBAT0185S01

Remarks: Specification data are reference values.

Terminal No.	Wire color	Item	Condition		Judgement standard
10	W/R	Power source	ON	When turning ignition switch to "ON".	Battery voltage
				When turning ignition switch to "OFF".	1V or less
19	W/R	Power source		Same as No. 10	
25	B	Ground	OFF	—	—
28	R/Y	Power source (Memory back-up)	ON or OFF	When turning ignition switch to "OFF".	Battery voltage
				When turning ignition switch to "ON".	Battery voltage
48	B	Ground	OFF	—	—

1 CHECK TCM POWER SOURCE

1. Turn ignition switch to "ON" position.
   (Do not start engine.)
2. Check voltage between TCM terminals 10, 19, 28 and ground.
   Voltage: Battery voltage

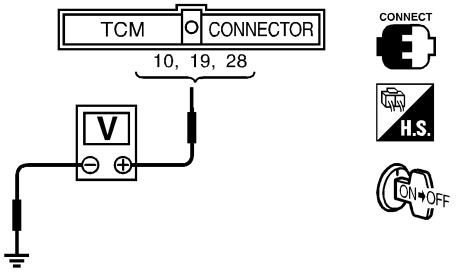

SAT514J

3. Turn ignition switch to "OFF" position.
4. Check voltage between TCM terminal 28 and ground.
   Voltage: Battery voltage

OK or NG

OK	▶	GO TO 2.
NG	▶	**Check the following items:** ● Harness for short or open between ignition switch and TCM terminals 10, 19 and 28 (Main harness) ● Ignition switch and fuse Refer to EL-9, "Schematic".

2	CHECK TCM GROUND CIRCUIT

1. Turn ignition switch to "OFF" position.
2. Disconnect TCM harness connector.
3. Check continuity between terminals 25, 48 and ground.
   Continuity should exist.

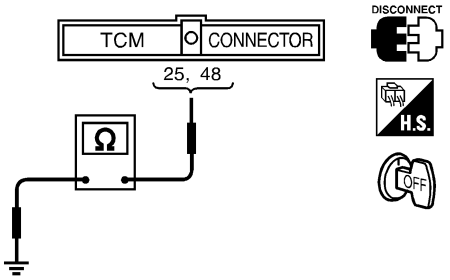

SAT515J

If OK, check harness for short to ground and short to power.

OK or NG

OK	▶	**INSPECTION END**
NG	▶	Repair open circuit or short to ground or short to power in harness or connectors.

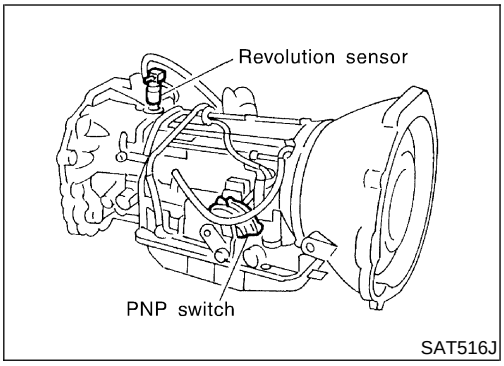

Description

NBAT0028

- The PNP switch assemble includes a transmission range switch.
- The transmission range switch detects the selector position and sends a signal to the TCM.

TCM TERMINALS AND REFERENCE VALUE

NBAT0028S02

Remarks: Specification data are reference values.

Terminal No.	Wire color	Item	Condition		Judgement standard
26	G	PNP switch “1” position	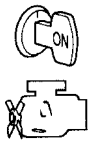	When setting selector lever to “1” position.	Battery voltage
				When setting selector lever to other positions.	1V or less
27	G/W	PNP switch “2” position		When setting selector lever to “2” position.	Battery voltage
				When setting selector lever to other positions.	1V or less
34	L	PNP switch “D” position		When setting selector lever to “D” position.	Battery voltage
				When setting selector lever to other positions.	1V or less
35	Y	PNP switch “R” position		When setting selector lever to “R” position.	Battery voltage
				When setting selector lever to other positions.	1V or less
36	P	PNP switch “N” or “P” position		When setting selector lever to “N” or “P” position.	Battery voltage
				When setting selector lever to other positions.	1V or less

ON BOARD DIAGNOSIS LOGIC

NBAT0028S03

Diagnostic trouble code	Malfunction is detected when ...	Check item (Possible cause)
: PNP SW/CIRC	TCM does not receive the correct voltage signal from the switch based on the gear position.	• Harness or connectors (The PNP switch circuit is open or shorted.) • PNP switch
: P0705		

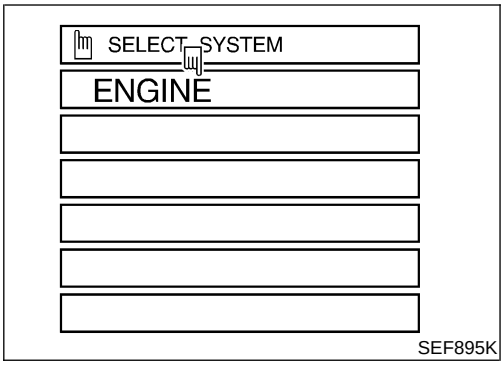

SEF895K

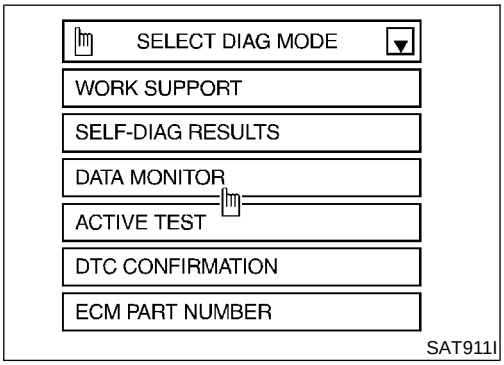

SAT911I

DIAGNOSTIC TROUBLE CODE (DTC) CONFIRMATION PROCEDURE

NBAT0028S01

CAUTION:

Always drive vehicle at a safe speed.

NOTE:

If "DIAGNOSTIC TROUBLE CODE CONFIRMATION PROCEDURE" has been previously conducted, always turn ignition switch "OFF" and wait at least 5 seconds before conducting the next test.

After the repair, perform the following procedure to confirm the malfunction is eliminated.

With CONSULT

1) Turn ignition switch "ON".
2) Select "DATA MONITOR" mode for "ENGINE" with CONSULT.
3) Start engine and maintain the following conditions for at least 5 consecutive seconds.
   VHCL SPEED SE: 10 km/h (6 MPH) or more
   THRTL POS SEN: More than 1.3V
   Selector lever: D position (OD "ON" or "OFF")

With GST

Follow the procedure "With CONSULT".

Wiring Diagram — AT — PNP/SW

NBAT0186

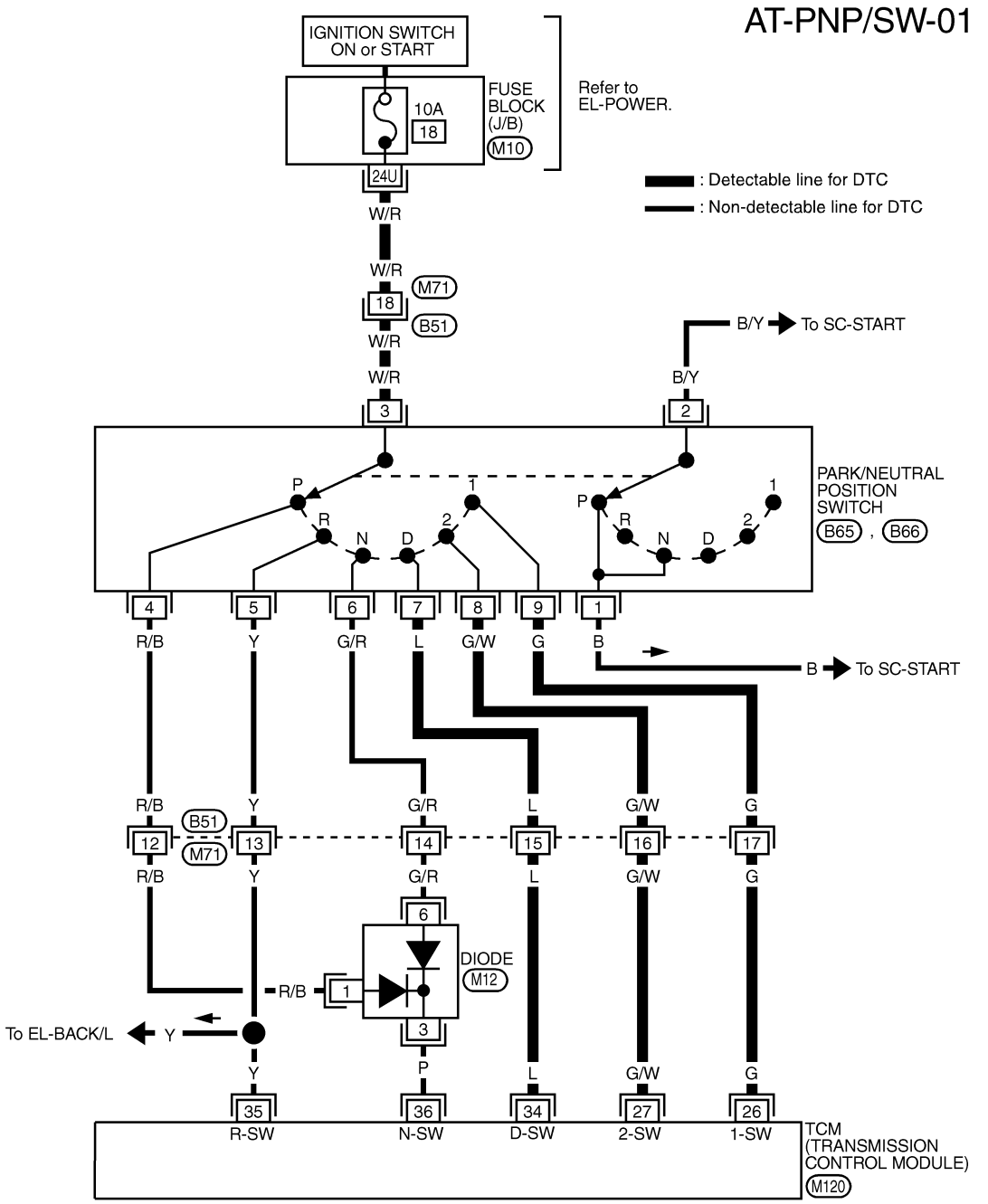

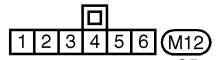

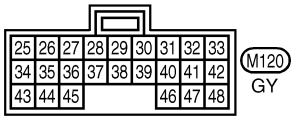

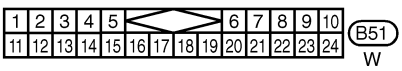

Refer to last page (Foldout page).
M10

MAT727A

Diagnostic Procedure

NBAT0029

1	CHECK PNP SWITCH CIRCUIT (With CONSULT)

With CONSULT

1. Turn ignition switch to “ON” position.
   (Do not start engine.)
2. Select “ECU INPUT SIGNALS” in “DATA MONITOR” mode for “A/T” with CONSULT.
3. Read out “P”, “R”, “N”, “D”, “2” and “1” position switches moving selector lever to each position. Check the signal of the selector lever position is indicated properly.

☆ MONITOR	☆ NO FAIL
R POSITION SW	OFF
D POSITION SW	OFF
2 POSITION SW	OFF
1 POSITION SW	OFF
ASCD•CRUISE	OFF
ASCD•OD CUT	OFF
KICKDOWN SW	OFF
POWER SHIFT SW	OFF
CLOSED THL/SW	OFF

RECORD

SAT761I

OK or NG

OK	▶	GO TO 3.
NG	▶	**Check the following items:** ● PNP switch Refer to “Component Inspection”, AT-104. ● Harness for short or open between ignition switch and PNP switch (Main harness) ● Harness for short or open between PNP switch and TCM (Main harness) ● Diode (P, N position)

2	CHECK PNP SWITCH CIRCUIT (Without CONSULT)

Without CONSULT

1. Turn ignition switch to "ON" position.
   (Do not start engine.)
2. Check voltage between TCM terminals 26, 27, 34, 35, 36 and ground while moving selector lever through each position.

Lever position	Terminals				
	36	35	34	27	26
P, N	**B**	0	0	0	0
R	0	**B**	0	0	0
D	0	0	**B**	0	0
2	0	0	0	**B**	0
1	0	0	0	0	**B**

MTBL0205

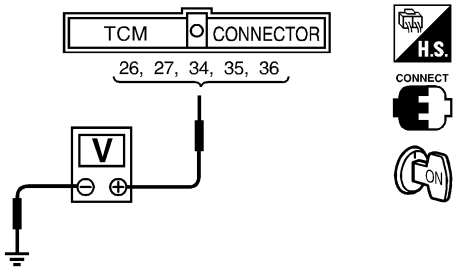

SAT517J

Does battery voltage exist (B) or non-existent (0)?

Yes	▶	GO TO 3.
No	▶	**Check the following items:** ● PNP switch Refer to "Component Inspection", AT-104. ● Harness for short or open between ignition switch and PNP switch (Main harness) ● Harness for short or open between PNP switch and TCM (Main harness) ● Diode (P, N position)

3	CHECK DTC

Perform Diagnostic Trouble Code (DTC) confirmation procedure, AT-100.

OK or NG

OK	▶	**INSPECTION END**
NG	▶	1. Perform TCM input/output signal inspection. 2. If NG, recheck TCM pin terminals for damage or loose connection with harness connector.

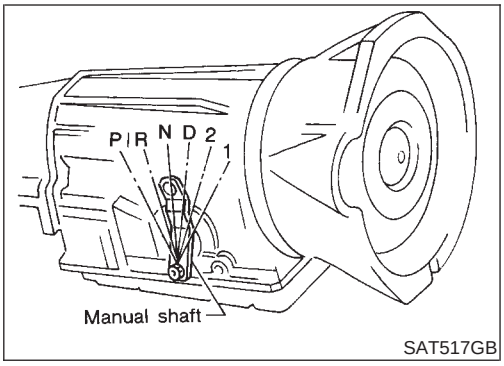

SAT517GB

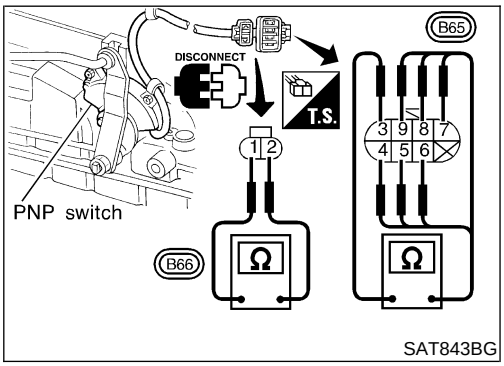

SAT843BG

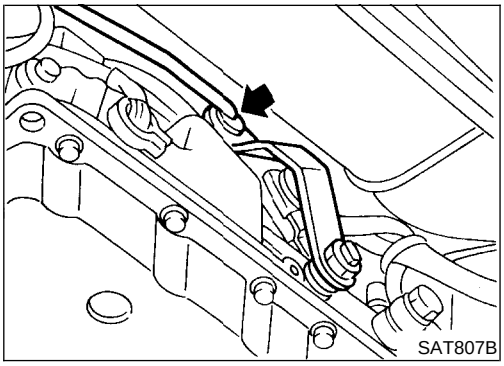
SAT807B

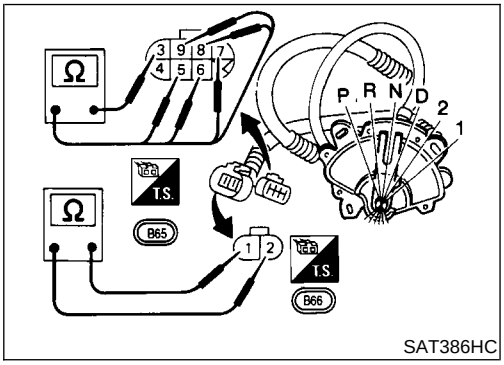

SAT386HC

Component Inspection

NBAT0030

PARK/NEUTRAL POSITION SWITCH

NBAT0030S02

1. Check continuity between terminals 1 and 2 and between terminals 3 and 4, 5, 6, 7, 8, 9 while moving manual shaft through each position.

Lever position	Terminal No.	
P	1 - 2	3 - 4
R	3 - 5	
N	1 - 2	3 - 6
D	3 - 7	
2	3 - 8	
1	3 - 9	

2. If NG, check again with manual control linkage disconnected from manual shaft of A/T assembly. Refer to step 1.
3. If OK on step 2, adjust manual control linkage. Refer to AT-261.
4. If NG on step 2, remove PNP switch from A/T and check continuity of PNP switch terminals. Refer to step 1.
5. If OK on step 4, adjust PNP switch. Refer to AT-260.
6. If NG on step 4, replace PNP switch.

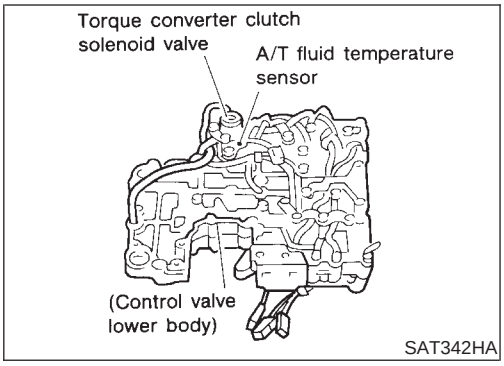

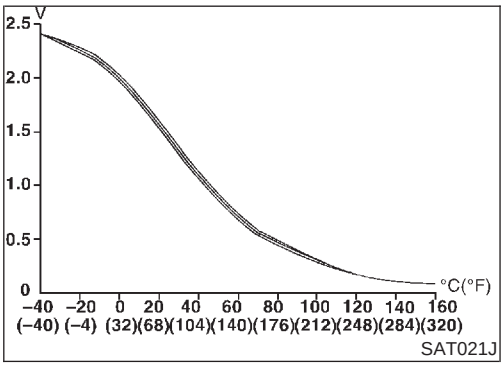

Description

NBAT0031

The A/T fluid temperature sensor detects the A/T fluid temperature and sends a signal to the TCM.

CONSULT REFERENCE VALUE IN DATA MONITOR MODE

NBAT0031S04

Remarks: Specification data are reference values.

Monitor item	Condition	Specification
A/T fluid temperature sensor	Cold [20°C (68°F)] ↓ Hot [80°C (176°F)]	Approximately 1.5V ↓ Approximately 0.5V

TCM TERMINALS AND REFERENCE VALUE

NBAT0031S02

Remarks: Specification data are reference values.

Terminal No.	Wire color	Item	Condition		Judgement standard
42	B	Throttle position sensor (Ground)		—	—
47	R	A/T fluid temperature sensor		When ATF temperature is 20°C (68°F).	Approximately 1.5V
				When ATF temperature is 80°C (176°F).	Approximately 0.5V

ON BOARD DIAGNOSIS LOGIC

NBAT0031S03

Diagnostic trouble code	Malfunction is detected when ...	Check item (Possible cause)
: ATF TEMP SEN/CIRC	TCM receives an excessively low or high voltage from the sensor.	• Harness or connectors (The sensor circuit is open or shorted.) • A/T fluid temperature sensor
: P0710		

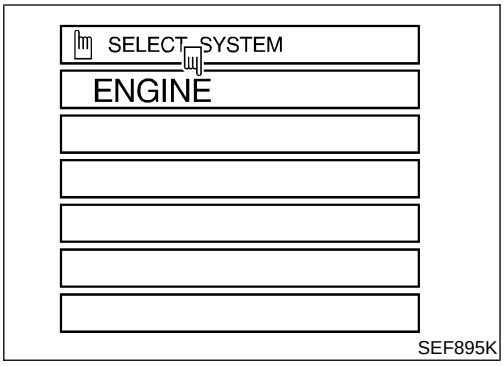

SEF895K

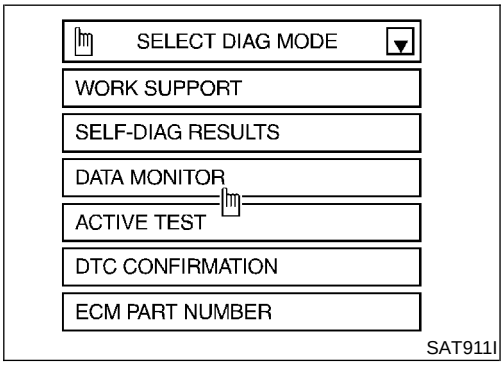

SAT911I

DIAGNOSTIC TROUBLE CODE (DTC) CONFIRMATION PROCEDURE

NBAT0031S01

CAUTION:

Always drive vehicle at a safe speed.

NOTE:

If "DIAGNOSTIC TROUBLE CODE CONFIRMATION PROCEDURE" has been previously conducted, always turn ignition switch "OFF" and wait at least 5 seconds before conducting the next test.

After the repair, perform the following procedure to confirm the malfunction is eliminated.

With CONSULT

1) Turn ignition switch "ON" and select "DATA MONITOR" mode for "ENGINE" with CONSULT.
2) Start engine and maintain the following conditions for at least 10 minutes (Total). (It is not necessary to maintain continuously.)
   CMPS·RPM (REF): 450 rpm or more
   VHCL SPEED SE: 10 km/h (6 MPH) or more
   THRTL POS SEN: More than 1.2V
   Selector lever: D position (OD "ON")

With GST

Follow the procedure "With CONSULT".

Wiring Diagram — AT — FTS

NBAT0187

AT-FTS-01

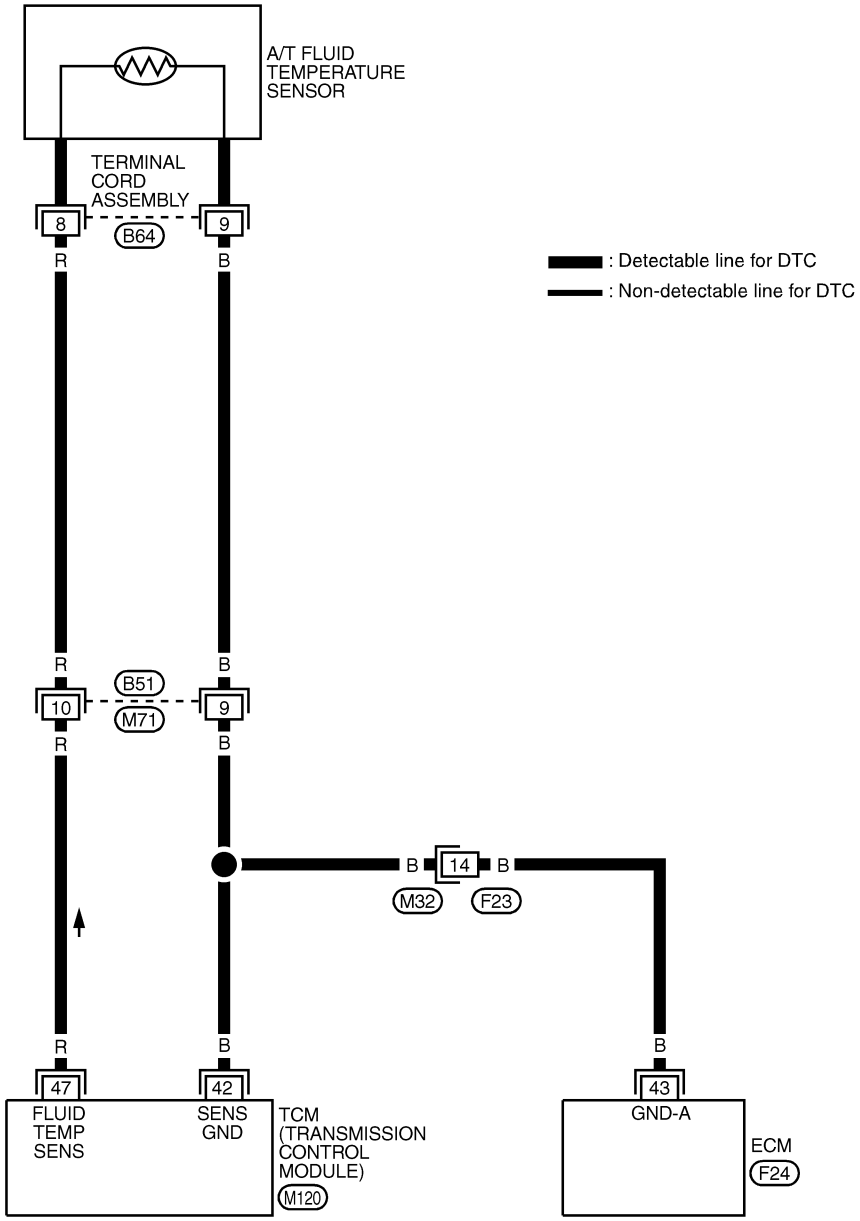

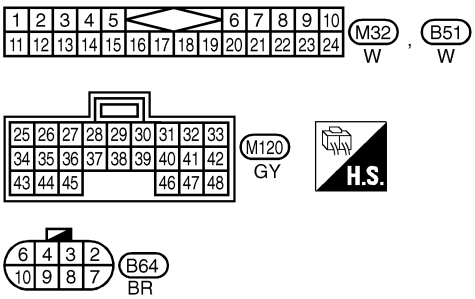

Refer to last page (Foldout page).
F24

MAT728A

Diagnostic Procedure

NBAT0032

1	CHECK A/T FLUID TEMPERATURE SENSOR WITH TERMINAL CORD ASSEMBLY

1. Turn ignition switch to “OFF” position.
2. Disconnect terminal cord assembly connector on the right side of transfer assmebly.
3. Check resistance between terminals 8 and 9 when A/T is cold [20°C (68°F)].

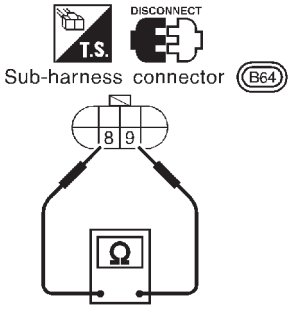

SAT697I

Is resistance approx. 2.5 kΩ?

Yes (With CONSULT) ▶	GO TO 2.
Yes (Without CONSULT) ▶	GO TO 3.
No ▶	1. Remove oil pan. 2. Check the following items: ● A/T fluid temperature sensor Refer to “Component Inspection”, AT-109. ● Harness of terminal cord assembly for short or open

2	CHECK INPUT SIGNAL OF A/T FLUID TEMPERATURE SENSOR (With CONSULT)

With CONSULT

1. Start engine.
2. Select “ECU INPUT SIGNALS” in “DATA MONITOR” mode for “A/T” with CONSULT.
3. Read out the value of “FLUID TEMP SE”.

Voltage:
Cold [20°C (68°F)] → Hot [80°C (176°F)]:
Approximately 1.5V → 0.5V

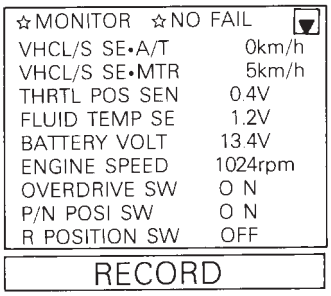

SAT076H

OK or NG

OK ▶	GO TO 4.
NG ▶	**Check the following item:** ● Harness for short or open between TCM and terminal cord assembly (Main harness)

3	CHECK INPUT SIGNAL OF A/T FLUID TEMPERATURE SENSOR (Without CONSULT)

Without CONSULT
1. Start engine.
2. Check voltage between TCM terminal 47 and ground while warming up A/T.

Voltage:
Cold [20°C (68°F)] → Hot [80°C (176°F)]:
Approximately 1.5V → 0.5V

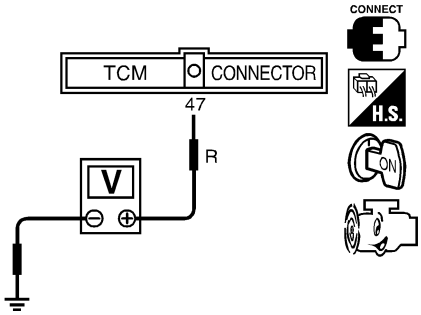

SAT518J

OK or NG

OK	▶	GO TO 4.
NG	▶	**Check the following item:** ● Harness for short or open between TCM and terminal cord assembly (Main harness)

4	CHECK DTC

Perform Diagnostic Trouble Code (DTC) confirmation procedure, AT-106.

OK or NG

OK	▶	**INSPECTION END**
NG	▶	1. Perform TCM input/output signal inspection. 2. If NG, recheck TCM pin terminals for damage or loose connection with harness connector.

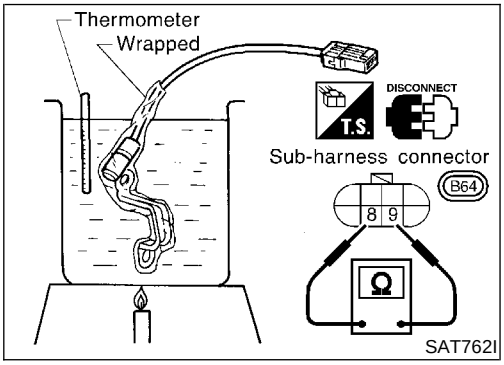

SAT762I

Component Inspection

NBAT0033

A/T FLUID TEMPERATURE SENSOR

NBAT0033S01

- For removal, refer to AT-259.
- Check resistance between terminals 8 and 9 while changing temperature as shown at left.

Temperature °C (°F)	Resistance
20 (68)	Approximately 2.5 kΩ
80 (176)	Approximately 0.3 kΩ

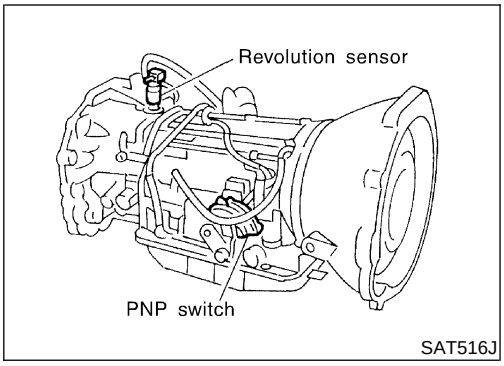

Description

NBAT0034

The revolution sensor detects the revolution of the out put shaft parking pawl lock gear and emits a pulse signal. The pulse signal is sent to the TCM which converts it into vehicle speed.

TCM TERMINALS AND REFERENCE VALUE

NBAT0034S02

Remarks: Specification data are reference values.

Terminal No.	Wire color	Item	Condition		Judgement standard
29	W	Revolution sensor (Measure in AC range)		When vehicle cruises at 30 km/h (19 MPH).	1V or more Voltage rises gradually in response to vehicle speed.
				When vehicle parks.	0V
42	B	Throttle position sensor (Ground)	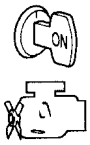	—	—

ON BOARD DIAGNOSIS LOGIC

NBAT0034S03

Diagnostic trouble code	Malfunction is detected when ...	Check item (Possible cause)
: VEH SPD SEN/CIR AT	TCM does not receive the proper voltage signal from the sensor.	• Harness or connectors (The sensor circuit is open or shorted.) • Revolution sensor
: P0720		

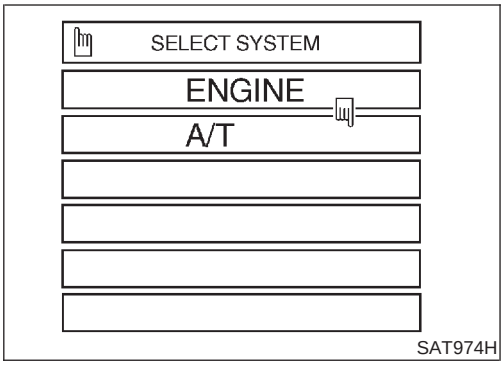

SAT974H

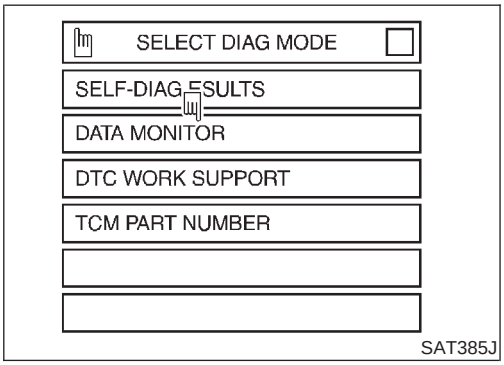

SAT385J

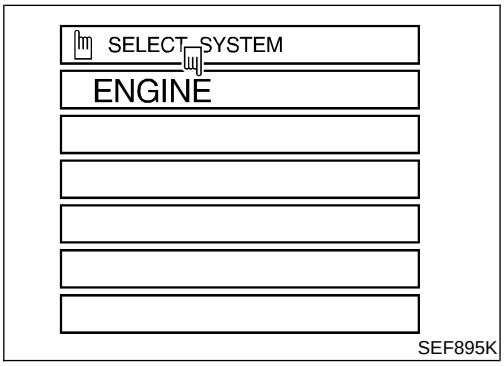

SEF895K

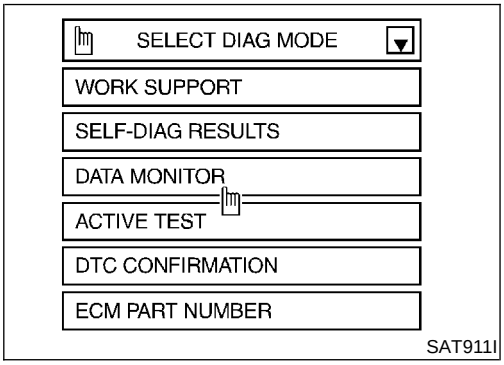

SAT911I

DIAGNOSTIC TROUBLE CODE (DTC) CONFIRMATION PROCEDURE

NBAT0034S01

CAUTION:

- **Always drive vehicle at a safe speed.**
- **Be careful not to rev engine into the red zone on the tachometer.**

NOTE:

If "DIAGNOSTIC TROUBLE CODE CONFIRMATION PROCEDURE" has been previously conducted, always turn ignition switch "OFF" and wait at least 5 seconds before conducting the next test.

After the repair, perform the following procedure to confirm the malfunction is eliminated.

With CONSULT

1) Turn ignition switch "ON" and select "DATA MONITOR" mode for "A/T" with CONSULT.
2) Drive vehicle and check for an increase of "VHCL/S SE·MTR" value.
   If the check result is NG, go to "DIAGNOSTIC PROCEDURE", AT-198.
   If the check result is OK, go to following step.
3) Select "DATA MONITOR" mode for "ENGINE" with CONSULT.
4) Start engine and maintain the following conditions for at least 5 consecutive seconds.
   VHCL SPEED SE: 30 km/h (19 MPH) or more
   THRTL POS SEN: More than 1.2V
   Selector lever: D position (OD "ON")
   Driving pattern: Driving the vehicle uphill (increased engine load) will help maintain the driving conditions required for this test.
   If the check result is NG, go to "DIAGNOSTIC PROCEDURE", AT-113.
   If the check result is OK, go to following step.
5) Maintain the following conditions for at least 5 consecutive seconds.
   CMPS·RPM (REF): 3,500 rpm or more
   THRTL POS SEN: More than 1.2V
   Selector lever: D position (OD "ON")
   Driving pattern: Driving the vehicle uphill (increased engine load) will help maintain the driving conditions required for this test.

With GST

Follow the procedure "With CONSULT".

Wiring Diagram — AT — VSSA/T

NBAT0188

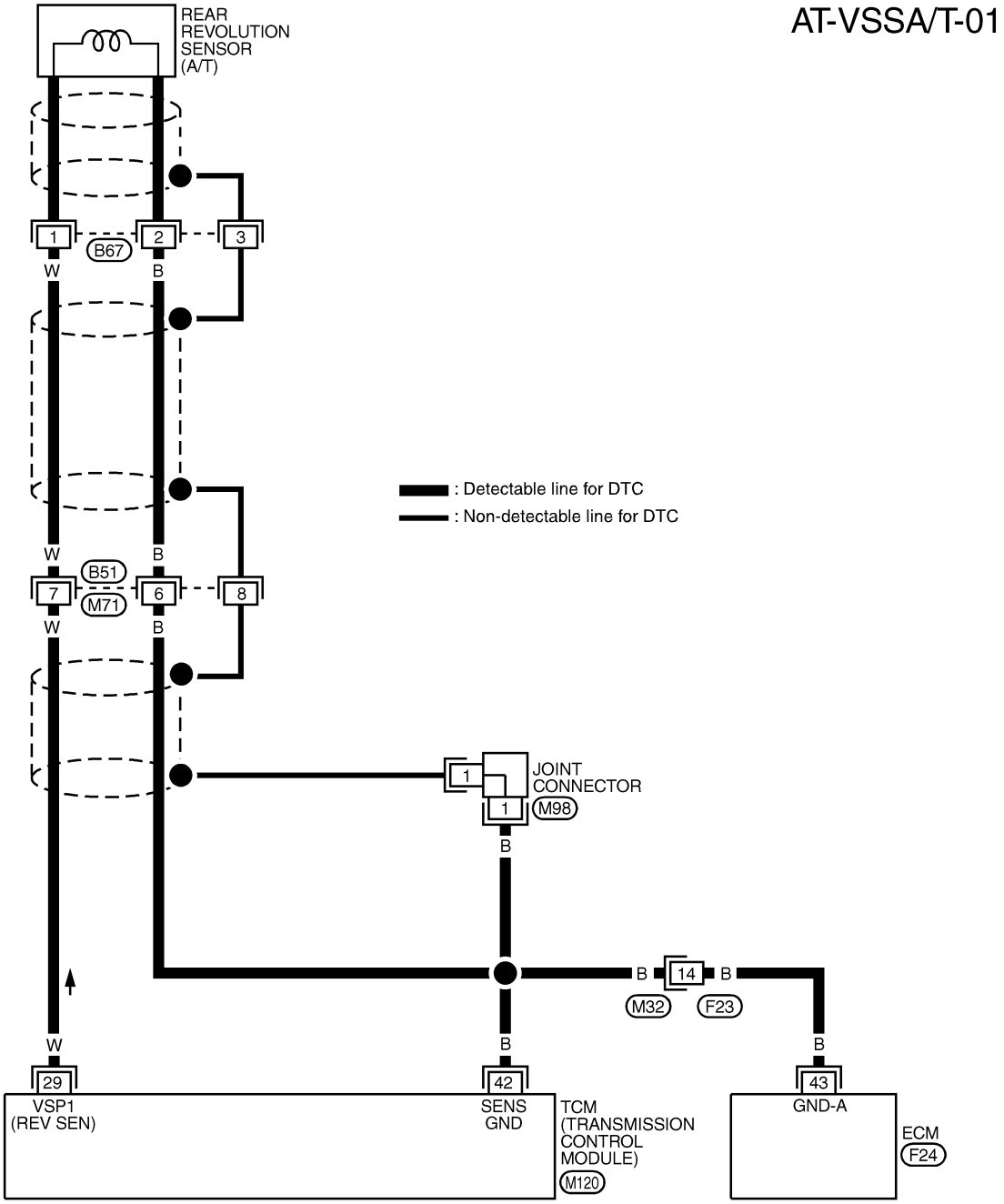

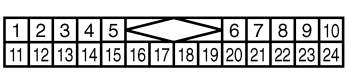

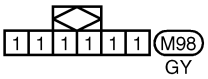

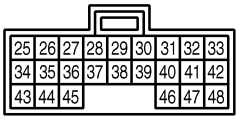

Refer to last page (Foldout page).
F24

MAT729A

Diagnostic Procedure

NBAT0035

1	CHECK REVOLUTION SENSOR	
Refer to “Component Inspection”, AT-114.		
OK or NG		
OK (With CONSULT)	▶	GO TO 2.
OK (Without CONSULT)	▶	GO TO 3.
NG	▶	Repair or replace revolution sensor.

2	CHECK INPUT SIGNAL (WITH CONSULT)	
With CONSULT 1. Start engine. 2. Select “ECU INPUT SIGNALS” in “DATA MONITOR” mode for “A/T” with CONSULT. 3. Read out the value of “VHCL/S SE·A/T” while driving. Check the value changes according to driving speed.		

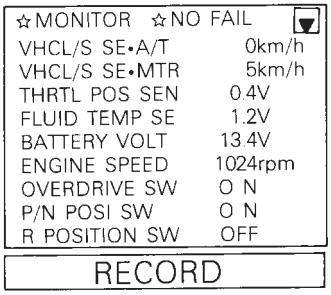

SAT076H

OK or NG		
OK	▶	GO TO 4.
NG	▶	**Check the following items:** ● Harness for short or open between TCM and revolution sensor (Main harness) ● Harness for short or open between revolution sensor and ECM (Main harness) ● Ground circuit for ECM Refer to EC-137, “WIRING DIAGRAM”.

3	CHECK INPUT SIGNAL (WITHOUT CONSULT)

Without CONSULT

1. Start engine.
2. Check voltage between TCM terminal 29 and ground while driving.
   (Measure with AC range.)

Voltage:
At 0 km/h (0 MPH):
0V
At 30 km/h (19 MPH):
1V or more
(Voltage rises gradually in response to vehicle speed.)

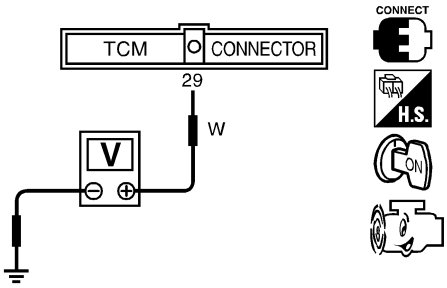

SAT519J

OK or NG

OK	▶	GO TO 4.
NG	▶	**Check the following items:** ● Harness for short or open between TCM and revolution sensor (Main harness) ● Harness for short or open between revolution sensor and ECM (Main harness) ● Ground circuit for ECM Refer to EC-137, "WIRING DIAGRAM".

4	CHECK DTC

Perform Diagnostic Trouble Code (DTC) confirmation procedure, AT-111.

OK or NG

OK	▶	**INSPECTION END**
NG	▶	1. Perform TCM input/output signal inspection. 2. If NG, recheck TCM pin terminals for damage or loose connection with harness connector.

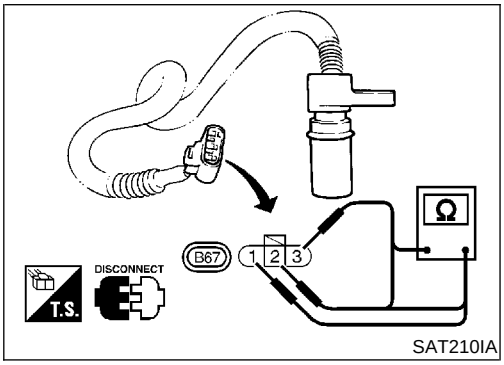

SAT210IA

Component Inspection

NBAT0036

REVOLUTION SENSOR

NBAT0036S01

- For removal, refer to AT-259.
- Check resistance between terminals 1, 2 and 3.

Terminal No.		Resistance
1	2	500 - 650Ω
2	3	No continuity
1	3	No continuity

Description

NBAT0037

The engine speed signal is sent from the ECM to the TCM.

TCM TERMINALS AND REFERENCE VALUE

NBAT0037S02

Remarks: Specification data are reference values.

Terminal No.	Wire color	Item	Condition		Judgement standard
39	W/B	Engine speed signal	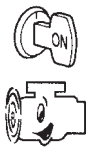	When engine runs at idle speed.	0.5 - 2.5V

ON BOARD DIAGNOSIS LOGIC

NBAT0037S03

Diagnostic trouble code	Malfunction is detected when ...	Check item (Possible cause)
: ENGINE SPEED SIG	TCM does not receive the proper voltage signal from ECM.	● Harness or connectors (The sensor circuit is open or shorted.)
: P0725		

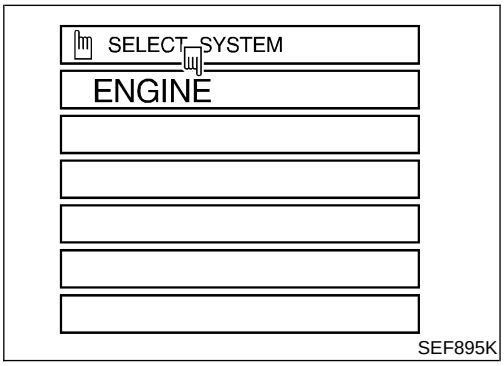

SEF895K

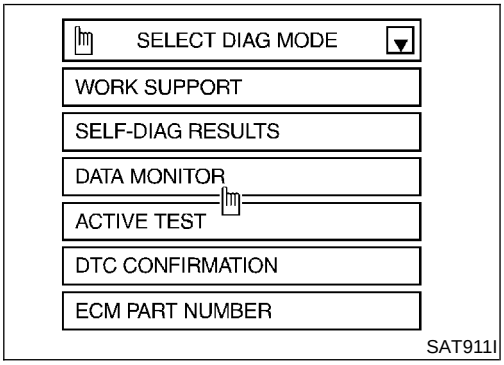

SAT911I

DIAGNOSTIC TROUBLE CODE (DTC) CONFIRMATION PROCEDURE

NBAT0037S01

CAUTION:

Always drive vehicle at a safe speed.

NOTE:

If "DIAGNOSTIC TROUBLE CODE CONFIRMATION PROCEDURE" has been previously conducted, always turn ignition switch "OFF" and wait at least 5 seconds before conducting the next test.

After the repair, perform the following procedure to confirm the malfunction is eliminated.

With CONSULT

1) Turn ignition switch "ON" and select "DATA MONITOR" mode for "ENGINE" with CONSULT.
2) Start engine and maintain the following conditions for at least 10 consecutive seconds.
   VHCL SPEED SE: 10 km/h (6 MPH) or more
   THRTL POS SEN: More than 1.2V
   Selector lever: D position (OD "ON")

With GST

Follow the procedure "With CONSULT".

Wiring Diagram — AT — ENGSS

NBAT0189

AT-ENGSS-01

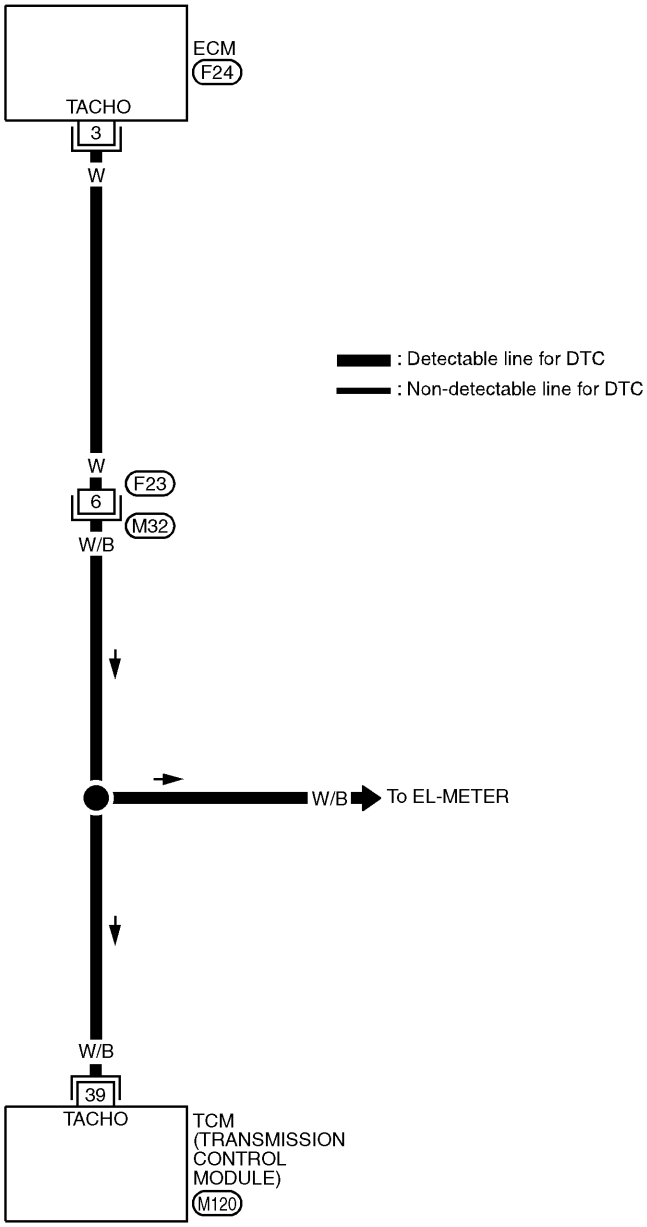

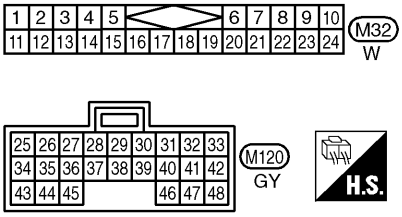

Refer to last page (Foldout page).
F24

MAT730A

Diagnostic Procedure

NBAT0038

1	CHECK DTC WITH ECM	
Perform diagnostic test mode II (self-diagnostic results) for engine control. Check ignition signal circuit condition.		
OK or NG		
OK (With CONSULT)	▶	GO TO 2.
OK (Without CONSULT)	▶	GO TO 3.
NG	▶	Check ignition signal circuit for engine control. Refer to EC-451, “IGNITION COIL & POWER TRANSISTOR”.

2	CHECK INPUT SIGNAL (WITH CONSULT)	
With CONSULT 1. Start engine. 2. Select “ECU INPUT SIGNALS” in “DATA MONITOR” mode for “A/T” with CONSULT. 3. Read out the value of “ENGINE SPEED”. Check engine speed changes according to throttle position.		

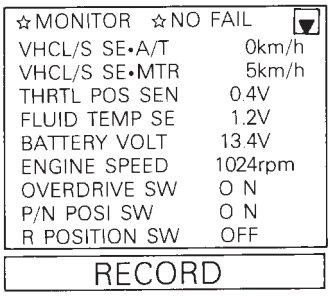

SAT076H

Does battery voltage (idle speed) 0.5 - 2.5V?		
Yes	▶	GO TO 4.
No	▶	**Check the following items:** ● Harness for short or open between TCM and ECM ● Resistor ● Ignition coil Refer to EC-451, “IGNITION COIL & POWER TRANSISTOR”.

3	CHECK INPUT SIGNAL (WITHOUT CONSULT)

Without CONSULT

1. Start engine.
2. Check voltage between TCM terminal 39 and ground.

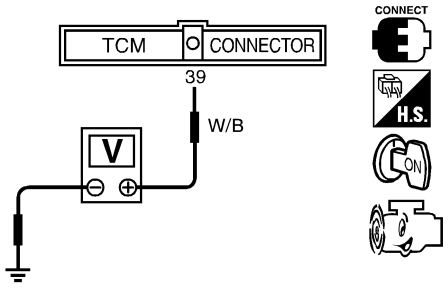

SAT520J

Does battery voltage (idle speed) 0.5 - 2.5V?

Yes	▶	GO TO 4.
No	▶	**Check the following items:** ● Harness for short or open between TCM and ECM ● Resistor ● Ignition coil Refer to EC-451, "IGNITION COIL & POWER TRANSISTOR".

4	CHECK DTC

Perform Diagnostic Trouble Code (DTC) confirmation procedure, AT-115.

OK or NG

OK	▶	**INSPECTION END**
NG	▶	1. Perform TCM input/output signal inspection. 2. If NG, recheck TCM pin terminals for damage or loose connection with harness connector.

Description

NBAT0039

- This is an OBD-II self-diagnostic item and not available in TCM self-diagnosis.
- This malfunction will not be detected while the O/D OFF indicator lamp is indicating another self-diagnosis malfunction.
- This malfunction is detected when the A/T does not shift into first gear position as instructed by the TCM. This is not caused by electrical malfunction (circuits open or shorted) but by mechanical malfunction such as control valve sticking, improper solenoid valve operation, etc.

Gear position	1	2	3	4
Shift solenoid valve A	ON (Closed)	OFF (Open)	OFF (Open)	ON (Closed)
Shift solenoid valve B	ON (Closed)	ON (Closed)	OFF (Open)	OFF (Open)

TCM TERMINALS AND REFERENCE VALUE

NBAT0039S02

Remarks: Specification data are reference values.

Terminal No.	Wire color	Item	Condition		Judgement standard
11	L/W	Shift solenoid valve A		When shift solenoid valve A operates. (When driving in “D_1” or “D_4”.)	Battery voltage
				When shift solenoid valve A does not operate. (When driving in “D_2” or “D_3”.)	1V or less
12	L/R	Shift solenoid valve B		When shift solenoid valve B operates. (When driving in “D_1” or “D_2”.)	Battery voltage
				When shift solenoid valve B does not operate. (When driving in “D_3” or “D_4”.)	1V or less

ON BOARD DIAGNOSIS LOGIC

NBAT0039S03

This diagnosis monitors actual gear position by checking the torque converter slip ratio calculated by TCM as follows:
Torque converter slip ratio = A x C/B
A: Output shaft revolution signal from revolution sensor
B: Engine speed signal from ECM
C: Gear ratio determined as gear position which TCM supposes
If the actual gear position is higher than the position (1st) supposed by TCM, the slip ratio will be more than normal. In case the ratio exceeds the specified value, TCM judges this diagnosis malfunction.
This malfunction will be caused when either shift solenoid valve A is stuck open or shift solenoid valve B is stuck open.

Gear position supposed by TCM	1	2	3	4
In case of gear position with no malfunctions	1	2	3	4
In case of gear position with shift solenoid valve A stuck open	2*	2	3	3
In case of gear position with shift solenoid valve B stuck open	4*	3	3	4

*: P0731 is detected.

Diagnostic trouble code	Malfunction is detected when ...	Check item (Possible cause)
: A/T 1ST GR FNCTN	A/T cannot be shifted to the 1st gear position even if electrical circuit is good.	• Shift solenoid valve A • Shift solenoid valve B • Each clutch • Hydraulic control circuit
GST : P0731		

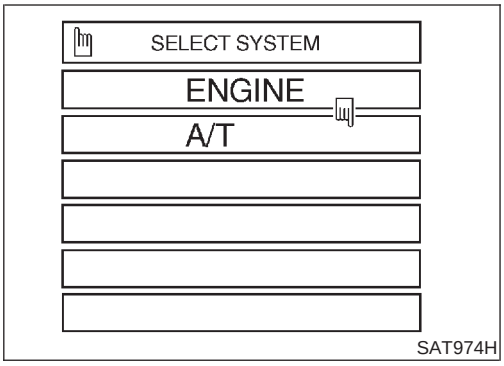

SAT974H

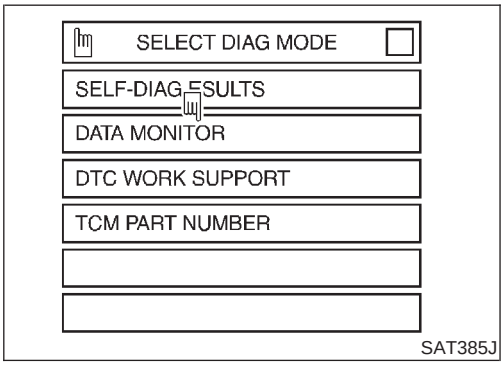

SAT385J

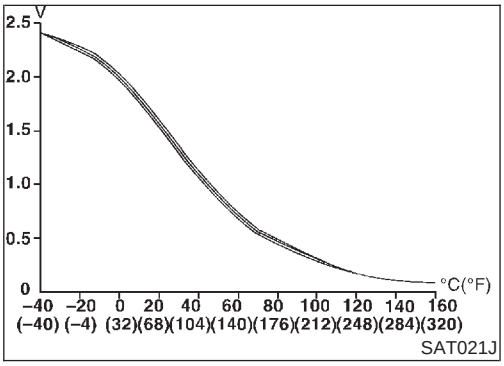

SAT021J

DIAGNOSTIC TROUBLE CODE (DTC) CONFIRMATION PROCEDURE

NBAT0039S01

CAUTION:

- **Always drive vehicle at a safe speed.**
- **Be careful not to rev engine into the red zone on the tachometer.**

NOTE:

If "DIAGNOSTIC TROUBLE CODE CONFIRMATION PROCEDURE" has been previously conducted, always turn ignition switch "OFF" and wait at least 5 seconds before conducting the next test.

TESTING CONDITIONS:

Always drive vehicle on a level road to improve the accuracy of test.

After the repair, perform the following procedure to confirm the malfunction is eliminated.

With CONSULT

1) Start engine and select "DATA MONITOR" mode for "A/T" with CONSULT.
2) Make sure that output voltage of A/T fluid temperature sensor is within the range below.
   FLUID TEMP SEN: 0.4 - 1.5V
   If out of range, drive the vehicle to decrease the voltage (warm up the fluid) or stop engine to increase the voltage (cool down the fluid).
3) Select "1ST GR FNCTN P0731" of "DTC WORK SUPPORT" mode for "A/T" with CONSULT and touch "START".
4) Accelerate vehicle to 20 to 25 km/h (12 to 16 MPH) under the following condition and release the accelerator pedal completely.
   THROTTLE POSI: Less than 1.0/8 (at all times during step 4)
   Selector lever: D position (OD "ON")

- **Check that "GEAR" shows "2" after releasing pedal.**

5) Depress accelerator pedal to WOT (more than 7.0/8 of "THROTTLE POSI") quickly from a speed of 20 to 25 km/h (12 to 16 MPH) until "TESTING" changes to "STOP VEHICLE" or "COMPLETED". (It will take approximately 3 seconds.)
   If the check result NG appears on CONSULT screen, go to "DIAGNOSTIC PROCEDURE", AT-123.
   If "STOP VEHICLE" appears on CONSULT screen, go to the following step.

- **Check that "GEAR" shows "1" when depressing accelerator pedal to WOT.**
- **If "TESTING" does not appear on CONSULT for a long time, select "SELF-DIAG RESULTS" for "ENGINE". In case a 1st trip DTC other than P0731 is shown, refer to applicable "TROUBLE DIAGNOSIS FOR DTC".**

6) Stop vehicle.
7) Follow the instruction displayed. (Check for normal shifting referring to the table below.)

Vehicle condition	Gear on actual transmission shift pattern when screen is changed to 1 → 2 → 3 → 4
No malfunction exists	1 → 2 → 3 → 4

Malfunction for P0731 exists.	2 → 2 → 3 → 3
	4 → 3 → 3 → 4

8) Make sure that "OK" is displayed. (If "NG" is displayed, refer to "DIAGNOSTIC PROCEDURE".)
   Refer to "DIAGNOSTIC PROCEDURE", AT-123.
   Refer to shift schedule, AT-339.

With GST

Follow the procedure "With CONSULT".

Wiring Diagram — AT — 1ST

NBAT0190

AT-1STSIG-01

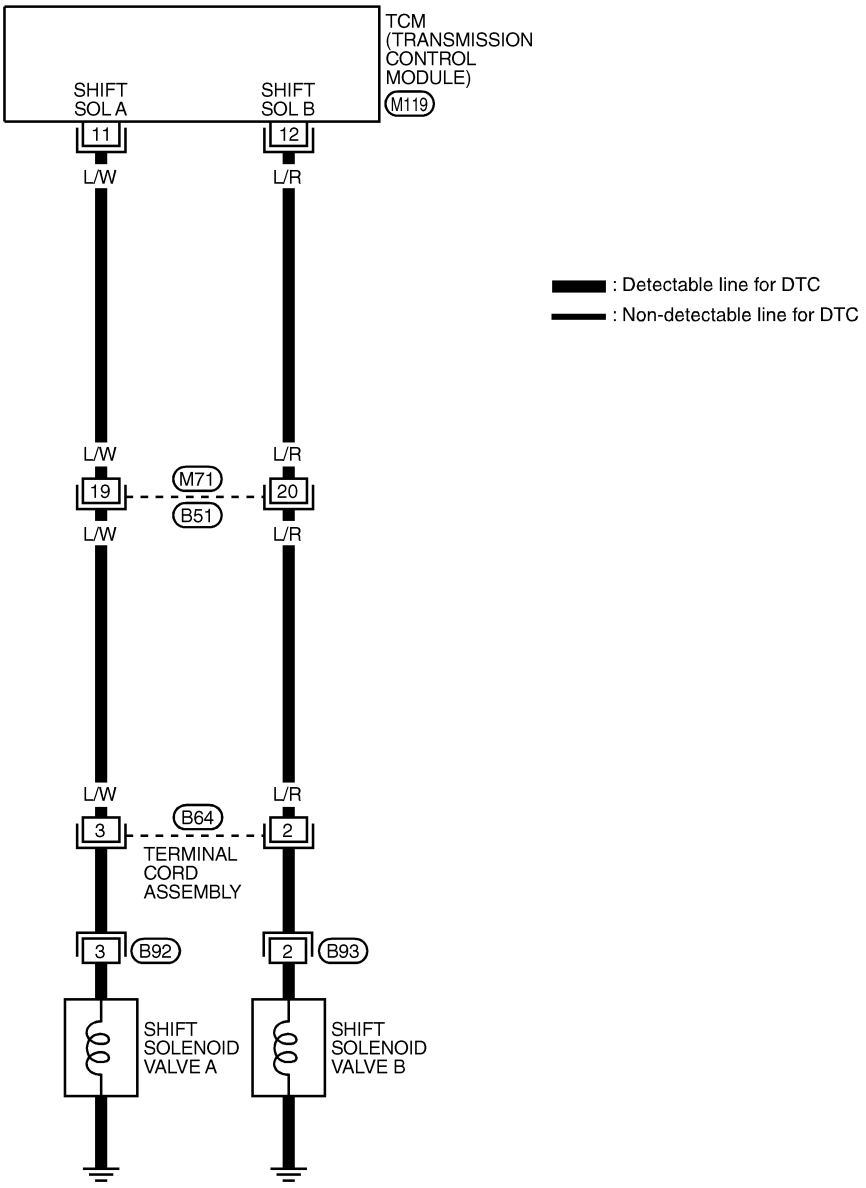

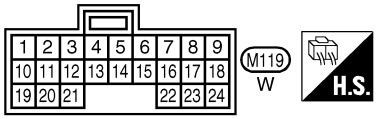

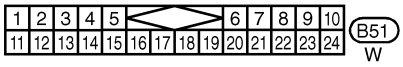

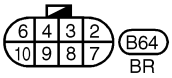

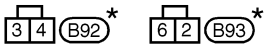

★ : This connector is not shown in "HARNESS LAYOUT" in EL section.

MAT731A

Diagnostic Procedure

NBAT0040

1	CHECK SHIFT SOLENOID VALVE

1. Remove control valve assembly. Refer to AT-259.
2. Check shift solenoid valve operation.
- Shift solenoid valve A
- Shift solenoid valve B

Refer to “Component Inspection”, AT-124.

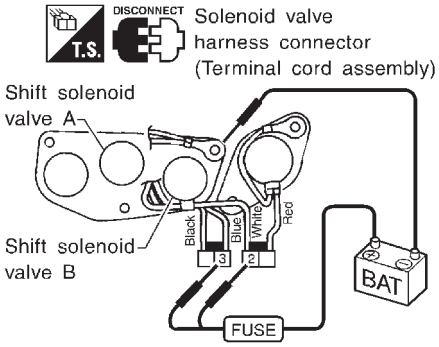

SAT648I

OK or NG

OK	▶	GO TO 2.
NG	▶	Repair or replace shift solenoid valve assembly.

2	CHECK CONTROL VALVE

1. Disassemble control valve assembly.
   Refer to “Control Valve Assembly”, AT-284.
2. Check to ensure that:
- Valve, sleeve and plug slide along valve bore under their own weight.
- Valve, sleeve and plug are free from burrs, dents and scratches.
- Control valve springs are free from damage, deformation and fatigue.
- Hydraulic line is free from obstacles.

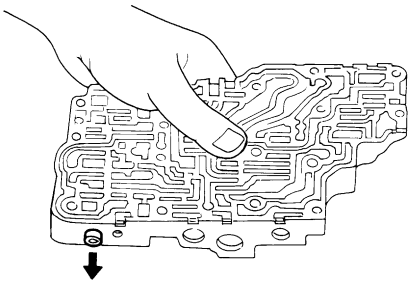

SAT367H

OK or NG

OK	▶	GO TO 3.
NG	▶	Repair control valve assembly.

3	CHECK DTC

Perform Diagnostic Trouble Code (DTC) confirmation procedure, AT-120.

OK or NG

OK	▶	**INSPECTION END**
NG	▶	Check control valve again. Repair or replace control valve assembly.

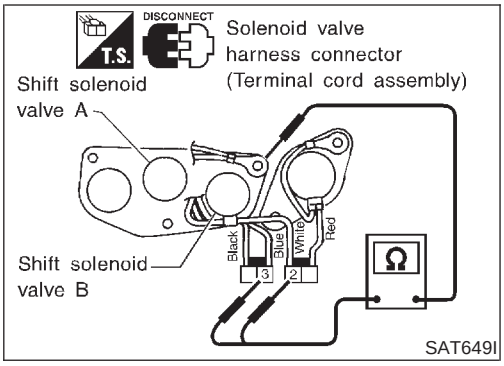

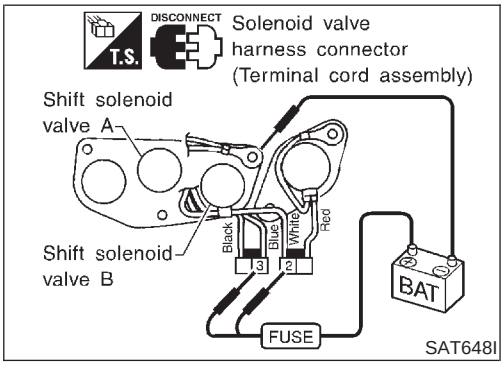

Component Inspection

=NBAT0041

SHIFT SOLENOID VALVE A AND B

NBAT0041S01

- For removal, refer to AT-259.

Resistance Check

NBAT0041S0101

- Check resistance between terminals (3 or 2) and ground.

Solenoid valve	Terminal No.		Resistance (Approx.)
Shift solenoid valve A	3	Ground	20 - 40Ω
Shift solenoid valve B	2		

Operation Check

NBAT0041S0102

- Check solenoid valve by listening for its operating sound while applying battery voltage to the terminals (3 or 2) and ground.

Description

NBAT0042

- This is an OBD-II self-diagnostic item and not available in TCM self-diagnosis.
- This malfunction will not be detected while the O/D OFF indicator lamp is indicating another self-diagnosis malfunction.
- This malfunction is detected when the A/T does not shift into second gear position as instructed by the TCM. This is not caused by electrical malfunction (circuits open or shorted) but by mechanical malfunction such as control valve sticking, improper solenoid valve operation, etc.

Gear position	1	2	3	4
Shift solenoid valve A	ON (Closed)	OFF (Open)	OFF (Open)	ON (Closed)
Shift solenoid valve B	ON (Closed)	ON (Closed)	OFF (Open)	OFF (Open)

TCM TERMINALS AND REFERENCE VALUE

NBAT0042S02

Remarks: Specification data are reference values.

Terminal No.	Wire color	Item	Condition		Judgement standard
12	L/R	Shift solenoid valve B		When shift solenoid valve B operates. (When driving in “D_1” or “D_2”.)	Battery voltage
				When shift solenoid valve B does not operate. (When driving in “D_3” or “D_4”.)	1V or less

ON BOARD DIAGNOSIS LOGIC

NBAT0042S03

This diagnosis monitors actual gear position by checking the torque converter slip ratio calculated by TCM as follows:
Torque converter slip ratio = A x C/B
A: Output shaft revolution signal from revolution sensor
B: Engine speed signal from ECM
C: Gear ratio determined as gear position which TCM supposes
If the actual gear position is higher than the position (2nd) supposed by TCM, the slip ratio will be more than normal. In case the ratio exceeds the specified value, TCM judges this diagnosis malfunction.
This malfunction will be caused when shift solenoid valve B is stuck open.

Gear position supposed by TCM	1	2	3	4
In case of gear position with no malfunctions	1	2	3	4
In case of gear position with shift solenoid valve B stuck open	4	3*	3	4

*: P0732 is detected.

Diagnostic trouble code	Malfunction is detected when ...	Check item (Possible cause)
: A/T 2ND GR FNCTN	A/T cannot be shifted to the 2nd gear position even if electrical circuit is good.	• Shift solenoid valve B • Each clutch • Hydraulic control circuit
GST : P0732		

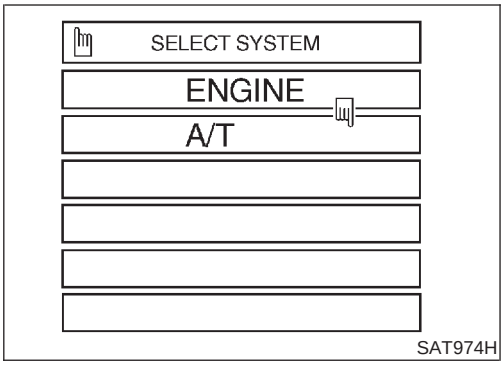

SAT974H

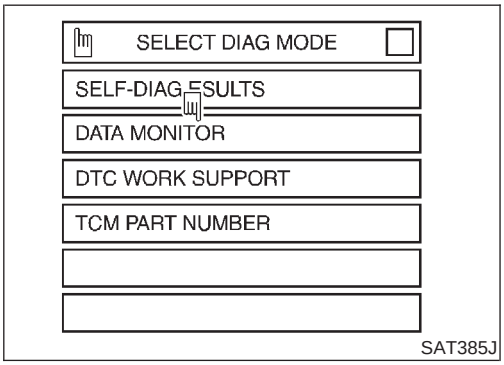

SAT385J

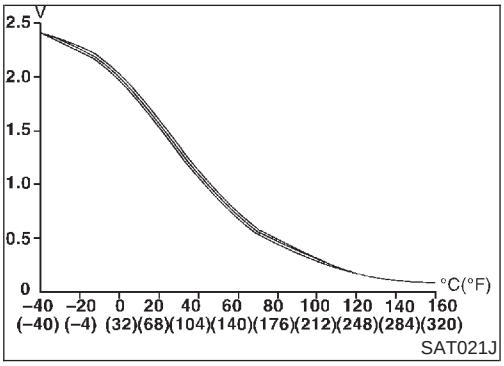

SAT021J

DIAGNOSTIC TROUBLE CODE (DTC) CONFIRMATION PROCEDURE

NBAT0042S01

CAUTION:

- **Always drive vehicle at a safe speed.**
- **Be careful not to rev engine into the red zone on the tachometer.**

NOTE:

If "DIAGNOSTIC TROUBLE CODE CONFIRMATION PROCEDURE" has been previously conducted, always turn ignition switch "OFF" and wait at least 5 seconds before conducting the next test.

TESTING CONDITIONS:

Always drive vehicle on a level road to improve the accuracy of test.

After the repair, perform the following procedure to confirm the malfunction is eliminated.

With CONSULT

1) Start engine and select "DATA MONITOR" mode for "A/T" with CONSULT.
2) Make sure that output voltage of A/T fluid temperature sensor is within the range below.
   FLUID TEMP SEN: 0.4 - 1.5V
   If out of range, drive the vehicle to decrease the voltage (warm up the fluid) or stop engine to increase the voltage (cool down the fluid).
3) Select "2ND GR FNCTN P0732" of "DTC WORK SUPPORT" mode for "A/T" with CONSULT and touch "START".
4) Accelerate vehicle to 52 to 57 km/h (32 to 35 MPH) under the following condition and release the accelerator pedal completely.
   THROTTLE POSI: Less than 1.0/8 (at all times during step 4)
   Selector lever: D position (OD "ON")

- **Check that "GEAR" shows "3" or "4" after releasing pedal.**

5) Depress accelerator pedal to WOT (more than 7.0/8 of "THROTTLE POSI") quickly from a speed of 52 to 57 km/h (32 to 35 MPH) until "TESTING" changes to "STOP VEHICLE" or "COMPLETED". (It will take approximately 3 seconds.)
   If the check result NG appears on CONSULT screen, go to "DIAGNOSTIC PROCEDURE", AT-129.
   If "STOP VEHICLE" appears on CONSULT screen, go to following step.

- **Check that "GEAR" shows "2" when depressing accelerator pedal to WOT.**
- **If "TESTING" does not appear on CONSULT for a long time, select "SELF-DIAG RESULTS" for "ENGINE". In case a 1st trip DTC other than P0732 is shown, refer to applicable "TROUBLE DIAGNOSIS FOR DTC".**

6) Stop vehicle.
7) Follow the instruction displayed. (Check for normal shifting referring to the table below.)

Vehicle condition	Gear on actual transmission shift pattern when screen is changed to 1 → 2 → 3 → 4
No malfunction exists	1 → 2 → 3 → 4
Malfunction for P0732 exists.	4 → 3 → 3 → 4

8) Make sure that "OK" is displayed. (If "NG" is displayed, refer to "DIAGNOSTIC PROCEDURE".) Refer to "DIAGNOSTIC PROCEDURE", AT-129. Refer to shift schedule, AT-339.

With GST

Follow the procedure "With CONSULT".

Wiring Diagram — AT — 2ND

NBAT0191

AT-2NDSIG-01

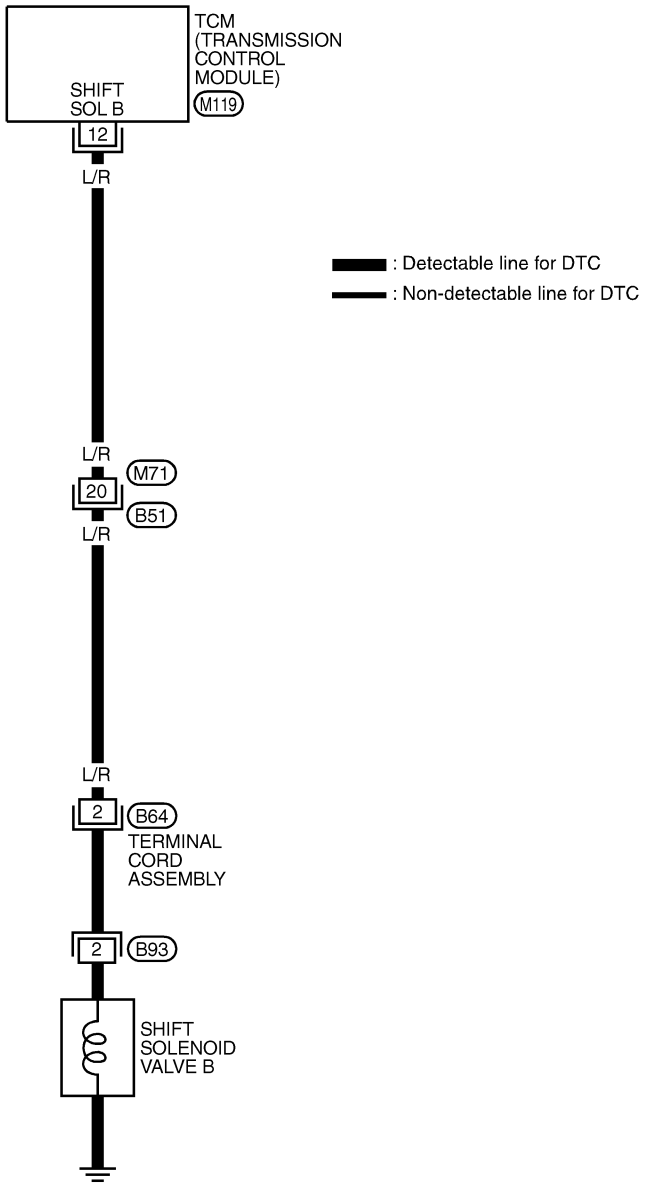

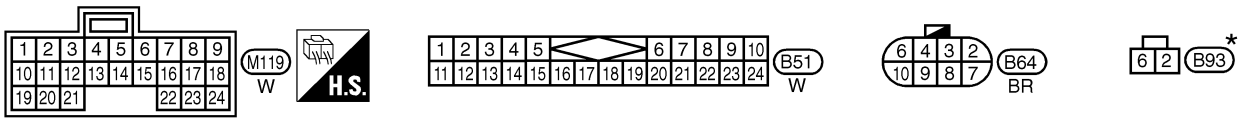

* : This connector is not shown in "HARNESS LAYOUT" in EL section.

MAT732A

Diagnostic Procedure

NBAT0043

1	CHECK SHIFT SOLENOID VALVE

1. Remove control valve assembly. Refer to AT-259.
2. Check shift solenoid valve operation.
- Shift solenoid valve B

Refer to “Component Inspection”, AT-130.

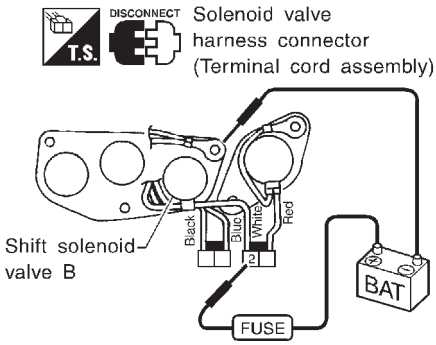

SAT650I

OK or NG

OK	▶	GO TO 2.
NG	▶	Repair or replace shift solenoid valve assembly.

2	CHECK CONTROL VALVE

1. Disassemble control valve assembly.
   Refer to “Control Valve Assembly”, AT-284.
2. Check to ensure that:
- Valve, sleeve and plug slide along valve bore under their own weight.
- Valve, sleeve and plug are free from burrs, dents and scratches.
- Control valve springs are free from damage, deformation and fatigue.
- Hydraulic line is free from obstacles.

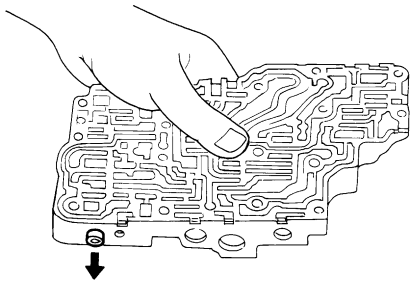

SAT367H

OK or NG

OK	▶	GO TO 3.
NG	▶	Repair control valve assembly.

3	CHECK DTC

Perform Diagnostic Trouble Code (DTC) confirmation procedure, AT-126.

OK or NG

OK	▶	**INSPECTION END**
NG	▶	Check control valve again. Repair or replace control valve assembly.

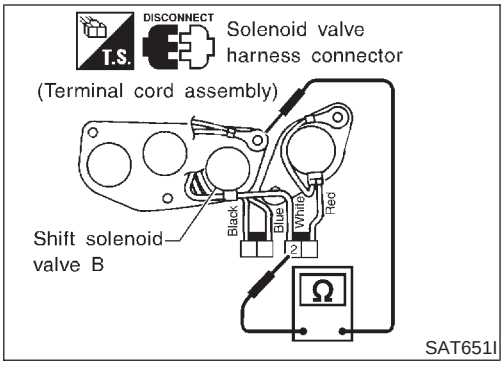

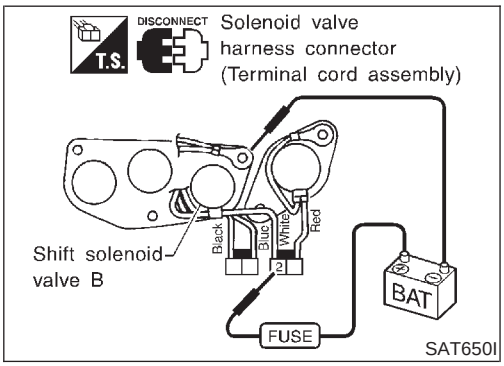

Component Inspection

NBAT0044

SHIFT SOLENOID VALVE B

NBAT0044S01

- For removal, refer to AT-259.

Resistance Check

NBAT0044S0101

- Check resistance between terminal 2 and ground.

Solenoid valve	Terminal No.		Resistance (Approx.)
Shift solenoid valve B	2	Ground	20 - 40Ω

Operation Check

NBAT0044S0102

- Check solenoid valve by listening for its operating sound while applying battery voltage to the terminal 2 and ground.

Description

NBAT0045

- This is an OBD-II self-diagnostic item and not available in TCM self-diagnosis.
- This malfunction will not be detected while the O/D OFF indicator lamp is indicating another self-diagnosis malfunction.
- This malfunction is detected when the A/T does not shift into third gear position as instructed by the TCM. This is not caused by electrical malfunction (circuits open or shorted) but by mechanical malfunction such as control valve sticking, improper solenoid valve operation, malfunctioning servo piston or brake band, etc.

Gear position	1	2	3	4
Shift solenoid valve A	ON (Closed)	OFF (Open)	OFF (Open)	ON (Closed)
Shift solenoid valve B	ON (Closed)	ON (Closed)	OFF (Open)	OFF (Open)

TCM TERMINALS AND REFERENCE VALUE

NBAT0045S02

Remarks: Specification data are reference values.

Terminal No.	Wire color	Item	Condition		Judgement standard
11	L/W	Shift solenoid valve A		When shift solenoid valve A operates. (When driving in “D_1” or “D_4”.)	Battery voltage
				When shift solenoid valve A does not operate. (When driving in “D_2” or “D_3”.)	1V or less

ON BOARD DIAGNOSIS LOGIC

NBAT0045S03

This diagnosis monitors actual gear position by checking the torque converter slip ratio calculated by TCM as follows:
Torque converter slip ratio = A x C/B
A: Output shaft revolution signal from revolution sensor
B: Engine speed signal from ECM
C: Gear ratio determined as gear position which TCM supposes
If the actual gear position is higher than the position (3rd) supposed by TCM, the slip ratio will be more than normal. In case the ratio exceeds the specified value, TCM judges this diagnosis malfunction.
This malfunction will be caused when shift solenoid valve A is stuck closed.

Gear position supposed by TCM	1	2	3	4
In case of gear position with no malfunctions	1	2	3	4
In case of gear position with shift solenoid valve A stuck closed	1	1	4*	4

*: P0733 is detected.

Diagnostic trouble code	Malfunction is detected when ...	Check item (Possible cause)
: A/T 3RD GR FNCTN	A/T cannot be shifted to the 3rd gear position even if electrical circuit is good.	• Shift solenoid valve A • Each clutch • Hydraulic control circuit
GST : P0733		

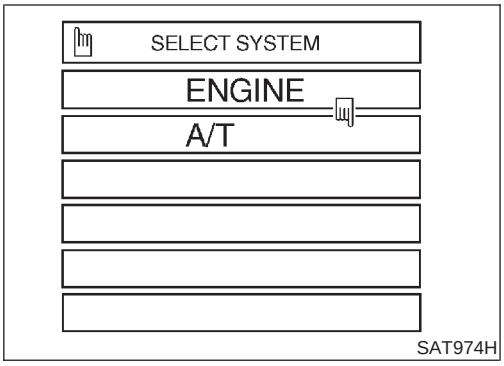

SAT974H

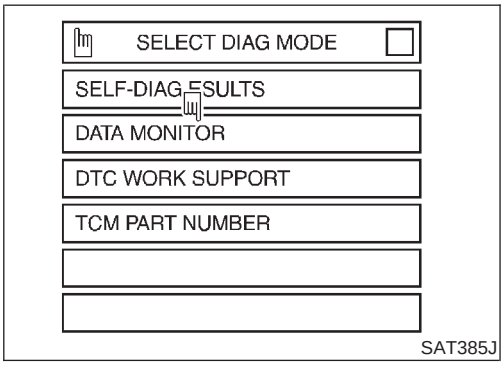

SAT385J

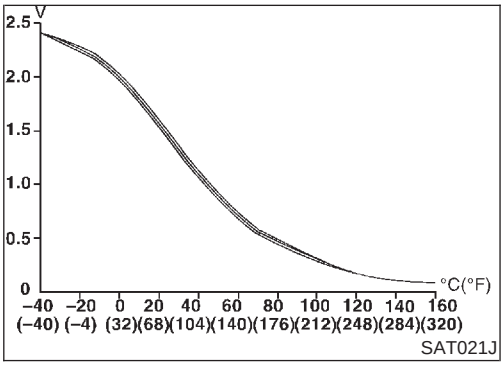

SAT021J

DIAGNOSTIC TROUBLE CODE (DTC) CONFIRMATION PROCEDURE

NBAT0045S01

CAUTION:

- **Always drive vehicle at a safe speed.**
- **Be careful not to rev engine into the red zone on the tachometer.**

NOTE:

If "DIAGNOSTIC TROUBLE CODE CONFIRMATION PROCEDURE" has been previously conducted, always turn ignition switch "OFF" and wait at least 5 seconds before conducting the next test.

TESTING CONDITIONS:

Always drive vehicle on a level road to improve the accuracy of test.

After the repair, perform the following procedure to confirm the malfunction is eliminated.

With CONSULT

1) Start engine and select "DATA MONITOR" mode for "A/T" with CONSULT.
2) Make sure that output voltage of A/T fluid temperature sensor is within the range below.
   FLUID TEMP SEN: 0.4 - 1.5V
   If out of range, drive the vehicle to decrease the voltage (warm up the fluid) or stop engine to increase the voltage (cool down the fluid).
3) Select "3RD GR FNCTN P0733" of "DTC WORK SUPPORT" mode for "A/T" with CONSULT and touch "START".
4) Accelerate vehicle to 75 to 90 km/h (47 to 56 MPH) under the following condition and release the accelerator pedal completely.
   THROTTLE POSI: Less than 1.0/8 (at all times during step 4)
   Selector lever: D position (OD "ON")

- **Check that "GEAR" shows "4" after releasing pedal.**

5) Depress accelerator pedal steadily with 3.5/8 - 4.5/8 of "THROTTLE POSI" from a speed of 75 to 90 km/h (47 to 56 MPH) until "TESTING" changes to "STOP VEHICLE" or "COMPLETED". (It will take approximately 3 seconds.)
   If the check result NG appears on CONSULT screen, go to "DIAGNOSTIC PROCEDURE", AT-135.
   If "STOP VEHICLE" appears on CONSULT screen, go to following step.

- **Check that "GEAR" shows "3" when depressing accelerator pedal with 3.5/8 - 4.5/8 of "THROTTLE POSI".**
- **If "TESTING" does not appear on CONSULT for a long time, select "SELF-DIAG RESULTS" for "ENGINE". In case a 1st trip DTC other than P0733 is shown, refer to applicable "TROUBLE DIAGNOSIS FOR DTC".**

6) Stop vehicle.
7) Follow the instruction displayed. (Check for normal shifting referring to the table below.)

Vehicle condition	Gear on actual transmission shift pattern when screen is changed to 1 → 2 → 3 → 4
No malfunction exists.	1 → 2 → 3 → 4
Malfunction for P0733 exists.	1 → 1 → 4 → 4

8) Make sure that "OK" is displayed. (If "NG" is displayed, refer to "DIAGNOSTIC PROCEDURE".) Refer to "DIAGNOSTIC PROCEDURE", AT-135.
   Refer to shift schedule, AT-339.

With GST

Follow the procedure "With CONSULT".

Wiring Diagram — AT — 3RD

NBAT0192

AT-3RDSIG-01

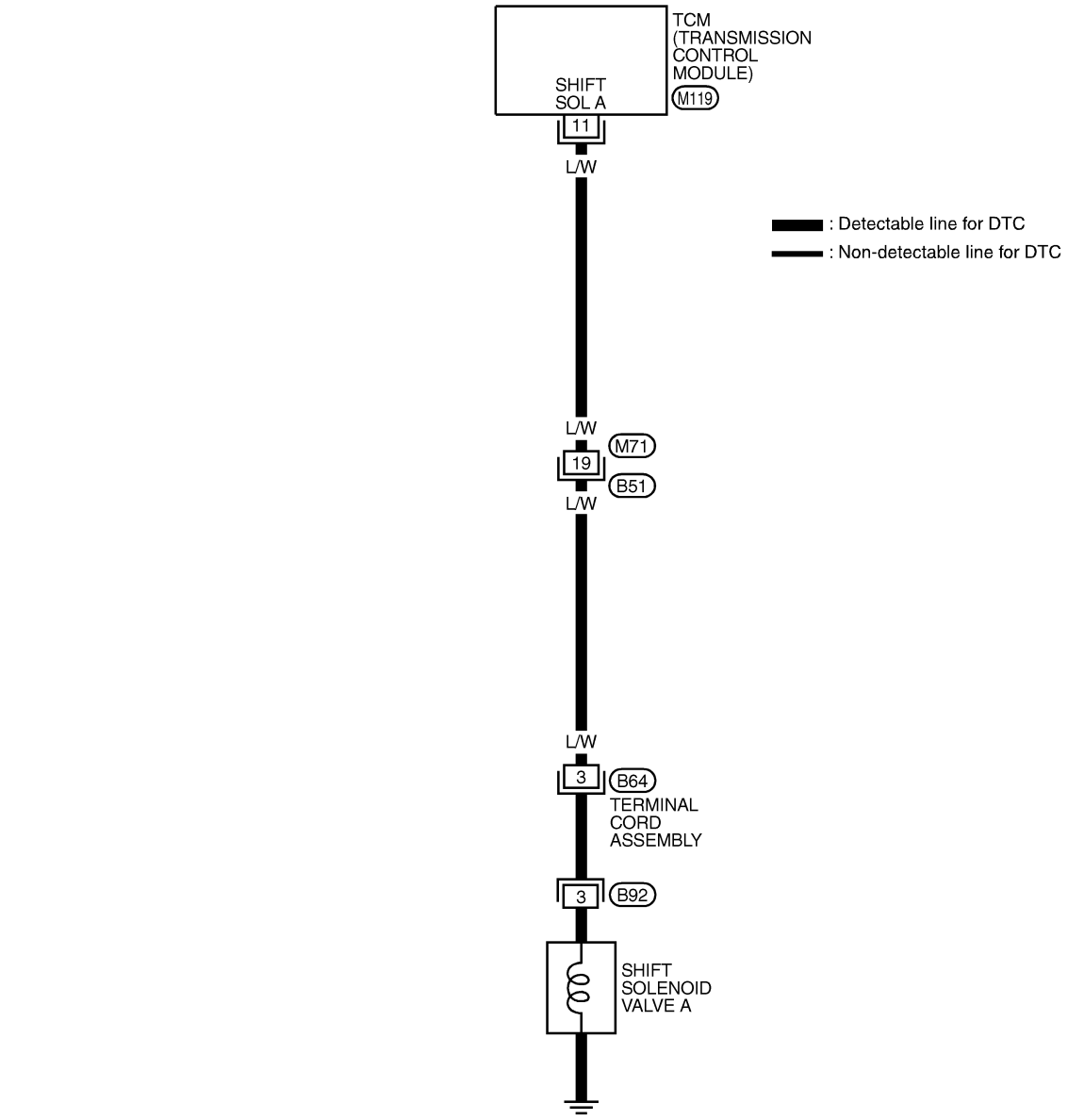

* : This connector is not shown in "HARNESS LAYOUT" in EL section.

MAT733A

Diagnostic Procedure

NBAT0046

1	CHECK SHIFT SOLENOID VALVE

1. Remove control valve assembly. Refer to AT-259.
2. Check shift solenoid valve operation.
- Shift solenoid valve A

Refer to “Component Inspection”, AT-136.

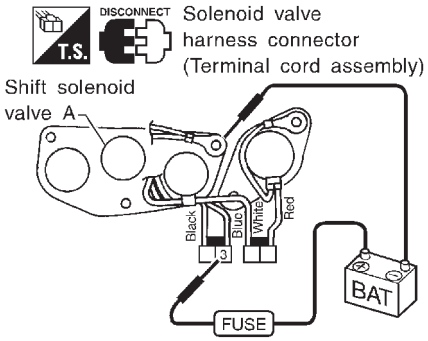

SAT653I

OK or NG

OK	▶	GO TO 2.
NG	▶	Repair or replace shift solenoid valve assembly.

2	CHECK CONTROL VALVE

1. Disassemble control valve assembly.
   Refer to “Control Valve Assembly”, AT-284.
2. Check to ensure that:
- Valve, sleeve and plug slide along valve bore under their own weight.
- Valve, sleeve and plug are free from burrs, dents and scratches.
- Control valve springs are free from damage, deformation and fatigue.
- Hydraulic line is free from obstacles.

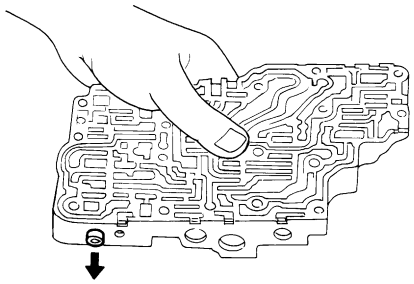

SAT367H

OK or NG

OK	▶	GO TO 3.
NG	▶	Repair control valve assembly.

3	CHECK DTC

Perform Diagnostic Trouble Code (DTC) confirmation procedure, AT-132.

OK or NG

OK	▶	**INSPECTION END**
NG	▶	Check control valve again. Repair or replace control valve assembly.

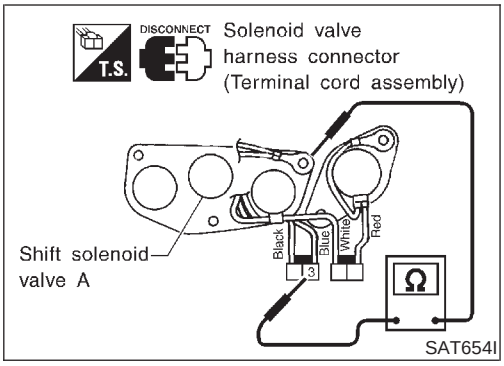

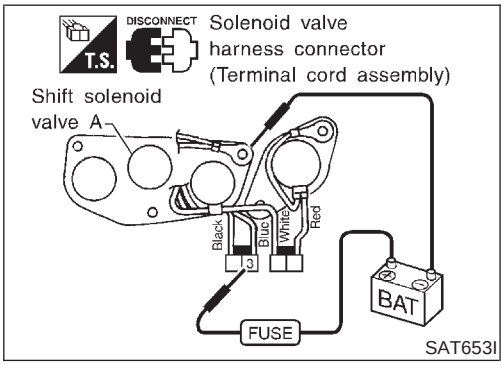

Component Inspection

NBAT0047

SHIFT SOLENOID VALVE A

NBAT0047S01

- For removal, refer to AT-259.

Resistance Check

NBAT0047S0101

- Check resistance between terminal 3 and ground.

Solenoid valve	Terminal No.		Resistance (Approx.)
Shift solenoid valve A	3	Ground	20 - 40Ω

Operation Check

NBAT0047S0102

- Check solenoid valve by listening for its operating sound while applying battery voltage to the terminal 3 and ground.

Description

NBAT0048

- This is an OBD-II self-diagnostic item and not available in TCM self-diagnosis.
- This malfunction will not be detected while the O/D OFF indicator lamp is indicating another self-diagnosis malfunction.
- This malfunction is detected when the A/T does not shift into fourth gear position or the torque converter clutch does not lock up as instructed by the TCM. This is not caused by electrical malfunction (circuits open or shorted) but by mechanical malfunction such as control valve sticking, improper solenoid valve operation, malfunctioning oil pump or torque converter clutch, etc.

CONSULT REFERENCE VALUE IN DATA MONITOR MODE

NBAT0048S04

Remarks: Specification data are reference values.

Monitor item	Condition	Specification
Torque converter clutch solenoid valve duty	Lock-up “OFF” ↓ Lock-up “ON”	Approximately 4% ↓ Approximately 94%
Line pressure solenoid valve duty	Small throttle opening (Low line pressure) ↓ Large throttle opening (High line pressure)	Approximately 24% ↓ Approximately 95%

Gear position	1	2	3	4
Shift solenoid valve A	ON (Closed)	OFF (Open)	OFF (Open)	ON (Closed)
Shift solenoid valve B	ON (Closed)	ON (Closed)	OFF (Open)	OFF (Open)

TCM TERMINALS AND REFERENCE VALUE

NBAT0048S02

Remarks: Specification data are reference values.

Terminal No.	Wire color	Item	Condition		Judgement standard
1	G/Y	Line pressure solenoid valve		When releasing accelerator pedal after warming up engine.	1.5 - 2.5V
				When depressing accelerator pedal fully after warming up engine.	0.5V or less
2	BR/Y	Line pressure solenoid valve (with dropping resistor)		When releasing accelerator pedal after warming up engine.	5 - 14V
				When depressing accelerator pedal fully after warming up engine.	0.5V or less
11	L/W	Shift solenoid valve A		When shift solenoid valve A operates. (When driving in “D_1” or “D_4”.)	Battery voltage
				When shift solenoid valve A does not operate. (When driving in “D_2” or “D_3”.)	1V or less
12	L/R	Shift solenoid valve B		When shift solenoid valve B operates. (When driving in “D_1” or “D_2”.)	Battery voltage
				When shift solenoid valve B does not operate. (When driving in “D_3” or “D_4”.)	1V or less

ON BOARD DIAGNOSIS LOGIC

=NBAT0048S03

This diagnosis monitors actual gear position by checking the torque converter slip ratio calculated by TCM as follows:
Torque converter slip ratio = A x C/B
A: Output shaft revolution signal from revolution sensor
B: Engine speed signal from ECM
C: Gear ratio determined as gear position which TCM supposes
If the actual gear position is much lower than the position (4th) supposed by TCM, the slip ratio will be much less than normal. In case the ratio does not reach the specified value, TCM judges this diagnosis malfunction.
This malfunction will be caused when shift solenoid valve B is stuck closed.

Gear position supposed by TCM	1	2	3	4
In case of gear position with no malfunctions	1	2	3	4
In case of gear position with shift solenoid valve B stuck closed	1	2	2	1*

*: P0734 is detected.

Diagnostic trouble code	Malfunction is detected when ...	Check item (Possible cause)
: A/T 4TH GR FNCTN	A/T cannot be shifted to the 4th gear position even if electrical circuit is good.	• Shift solenoid valve A • Shift solenoid valve B • Line pressure solenoid valve • Each clutch • Hydraulic control circuit
: P0734		

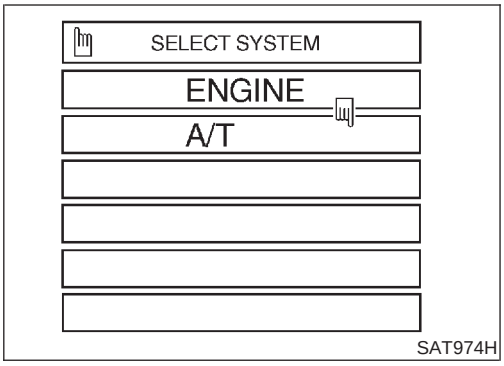

SAT974H

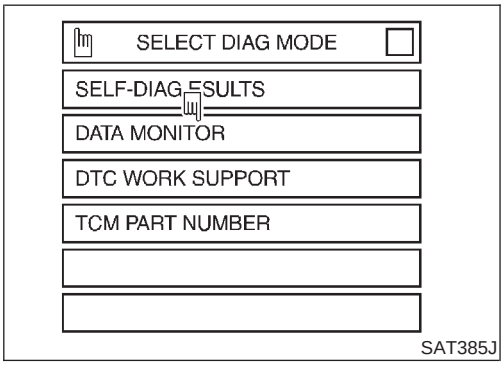

SAT385J

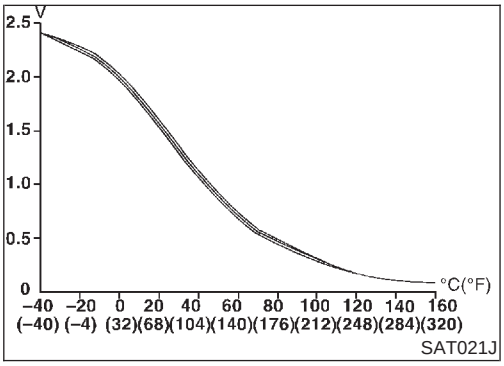

SAT021J

DIAGNOSTIC TROUBLE CODE (DTC) CONFIRMATION PROCEDURE

NBAT0048S01

CAUTION:

- **Always drive vehicle at a safe speed.**
- **Be careful not to rev engine into the red zone on the tachometer.**

NOTE:

If "DIAGNOSTIC TROUBLE CODE CONFIRMATION PROCEDURE" has been previously conducted, always turn ignition switch "OFF" and wait at least 5 seconds before conducting the next test.

TESTING CONDITIONS:

Always drive vehicle on a level road to improve the accuracy of test.

After the repair, perform the following procedure to confirm the malfunction is eliminated.

With CONSULT

1) Start engine and select "DATA MONITOR" mode for "A/T" with CONSULT.
2) Make sure that output voltage of A/T fluid temperature sensor is within the range below.
   FLUID TEMP SEN: 0.4 - 1.5V
   If out of range, drive the vehicle to decrease the voltage (warm up the fluid) or stop engine to increase the voltage (cool down the fluid).
3) Select "4TH GR FNCTN P0734" of "DTC WORK SUPPORT" mode for "A/T" with CONSULT and touch "START".
4) Accelerate vehicle to 45 to 55 km/h (28 to 34 MPH) under the following condition and release the accelerator pedal completely.
   THROTTLE POSI: Less than 5.5/8 (at all times during step 4)
   Selector lever: D position (OD "ON")
   - **Check that "GEAR" shows "3" after releasing pedal.**
5) Depress accelerator pedal steadily with 1.0/8 - 2.0/8 of "THROTTLE POSI" from a speed of 45 to 55 km/h (28 to 34 MPH) until "TESTING" has turned to "STOP VEHICLE" or "COMPLETED". (It will take approximately 3 seconds.)
   If the check result NG appears on CONSULT screen, go to "DIAGNOSTIC PROCEDURE", AT-142.
   If "STOP VEHICLE" appears on CONSULT screen, go to following step.
   - **Check that "GEAR" shows "4" when depressing accelerator pedal with 1.0/8 - 2.0/8 of "THROTTLE POSI".**
   - **If "TESTING" does not appear on CONSULT for a long time, select "SELF-DIAG RESULTS" for "ENGINE". In case a 1st trip DTC other than P0734 is shown, refer to applicable "TROUBLE DIAGNOSIS FOR DTC".**
6) Stop vehicle.
7) Follow the instruction displayed. (Check for normal shifting referring to the table below.)

Vehicle condition	Gear on actual transmission shift pattern when screen is changed to 1 → 2 → 3 → 4
No malfunction exists	1 → 2 → 3 → 4
Malfunction for P0734 exists.	1 → 2 → 2 → 1

8) Make sure that "OK" is displayed. (If "NG" is displayed, refer to "DIAGNOSTIC PROCEDURE".) Refer to "DIAGNOSTIC PROCEDURE", AT-142.
   Refer to shift schedule, AT-339.

With GST

Follow the procedure "With CONSULT".

Wiring Diagram — AT — 4TH

NBAT0193

AT-4THSIG-01

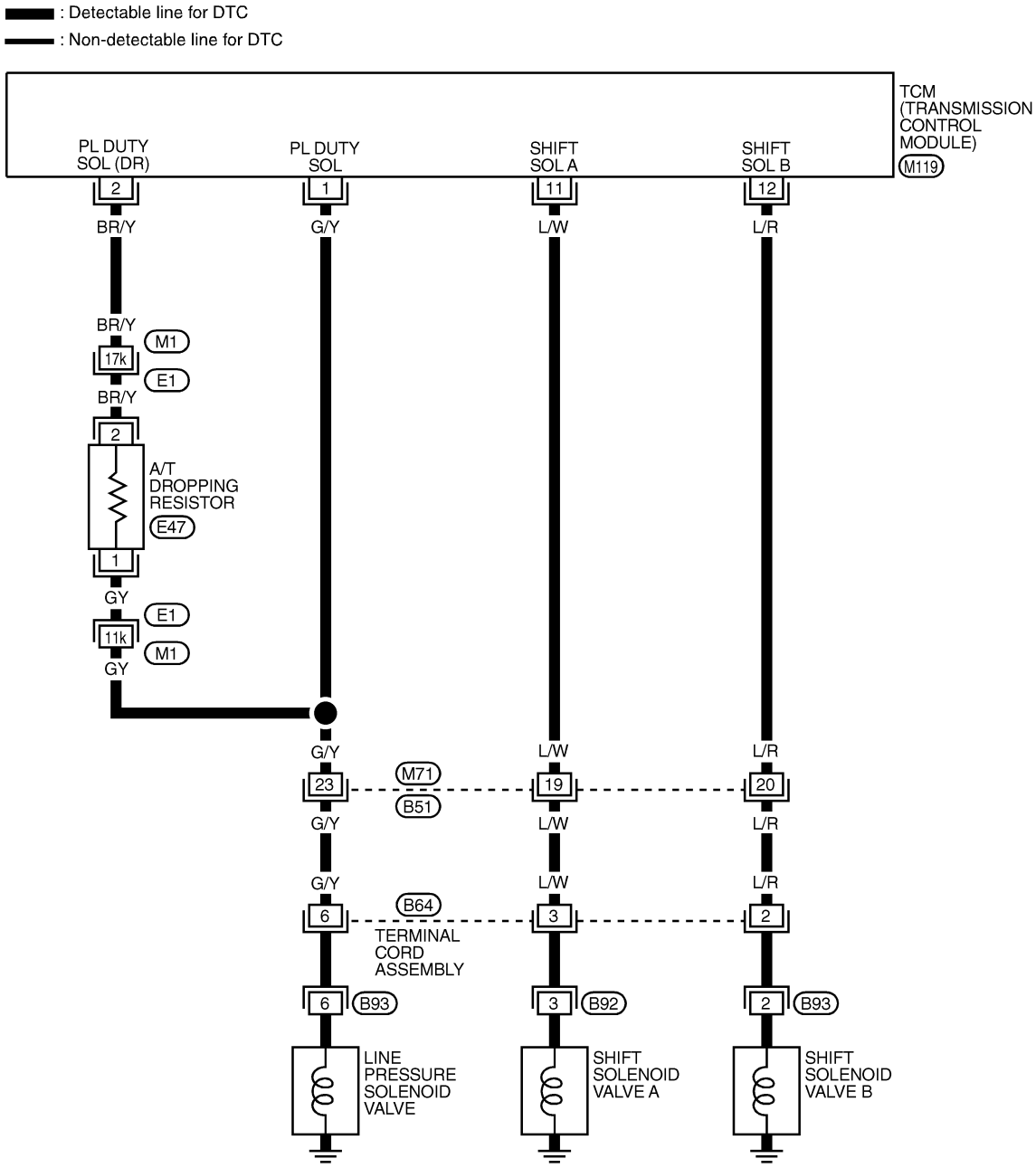

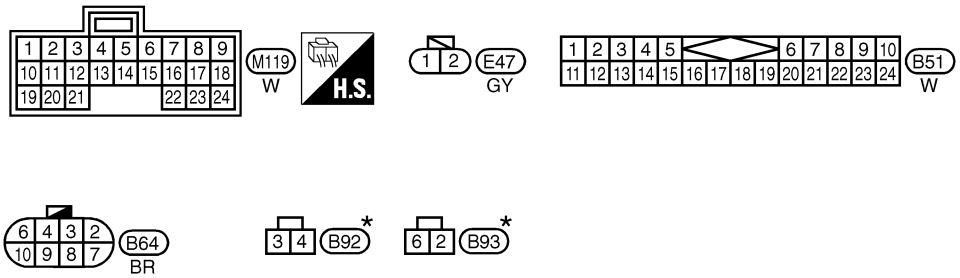

★ : This connector is not shown in "HARNESS LAYOUT" in EL section.

Refer to last page (Foldout page).
M1 , E1

MAT734A

Diagnostic Procedure

NBAT0049

1	CHECK SHIFT UP (D_3 TO D_4)

During “Cruise test − Part 1”, AT-71.
Does A/T shift from D_3 to D_4 at the specified speed?

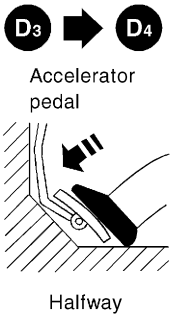

SAT988H

Yes or No

Yes	▶	GO TO 9.
No	▶	GO TO 2.

2	CHECK LINE PRESSURE

Perform line pressure test. Refer to AT-62.

OK or NG

OK	▶	GO TO 3.
NG	▶	GO TO 6.

3	CHECK SOLENOID VALVES

1. Remove control valve assembly. Refer to AT-259.
2. Refer to "Component Inspection", AT-146.

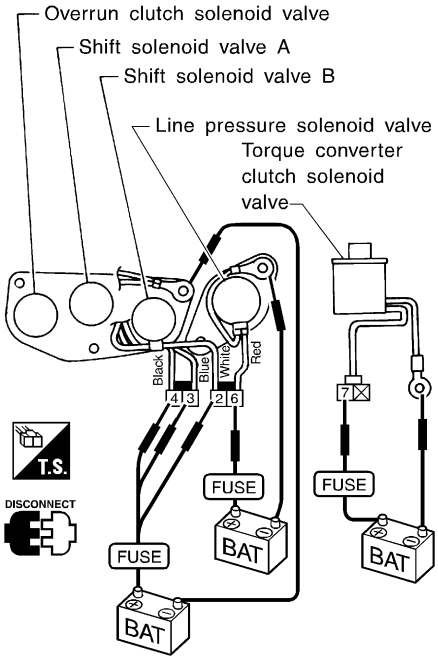

SAT158J

OK or NG

OK	▶	GO TO 4.
NG	▶	Replace solenoid valve assembly.

4	CHECK CONTROL VALVE

1. Disassemble control valve assembly. Refer to AT-284.
2. Check to ensure that:
- Valve, sleeve and plug slide along valve bore under their own weight.
- Valve, sleeve and plug are free from burrs, dents and scratches.
- Control valve springs are free from damage, deformation and fatigue.
- Hydraulic line is free from obstacles.

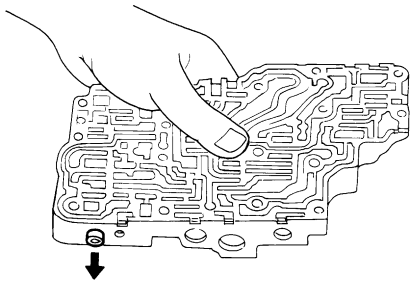

SAT367H

OK or NG

OK	▶	GO TO 5.
NG	▶	Repair control valve.

5	CHECK SHIFT UP (D_3 TO D_4)	
Does A/T shift from D_3 to D_4 at the specified speed?		
	Yes or No	
Yes	▶	GO TO 9.
No	▶	Check control valve again. Repair or replace control valve assembly.

6	CHECK LINE PRESSURE SOLENOID VALVE	
1. Remove control valve assembly. Refer to AT-259. 2. Refer to "Component Inspection", AT-146.		

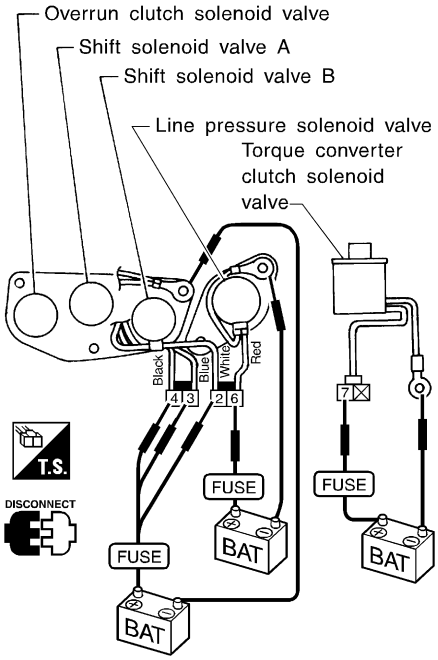

SAT158J

	OK or NG	
OK	▶	GO TO 7.
NG	▶	Replace solenoid valve assembly.

7	CHECK CONTROL VALVE

1. Disassemble control valve assembly. Refer to AT-284.
2. Check line pressure circuit valves for sticking.
- Pressure regulator valve
- Pilot valve
- Pressure modifier valve

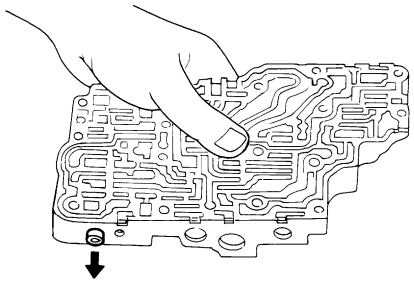

SAT367H

OK or NG

OK	▶	GO TO 8.
NG	▶	Repair control valve.

8	CHECK SHIFT UP (D_3 TO D_4)

Does A/T shift from D_3 to D_4 at the specified speed?

OK or NG

OK	▶	GO TO 9.
NG	▶	Check control valve again. Repair or replace control valve assembly.

9	CHECK DTC

Perform Diagnostic Trouble Code (DTC) confirmation procedure, AT-139.

OK or NG

OK	▶	**INSPECTION END**
NG	▶	Perform "Cruise test — Part 1" again and return to the start point of this flow chart.

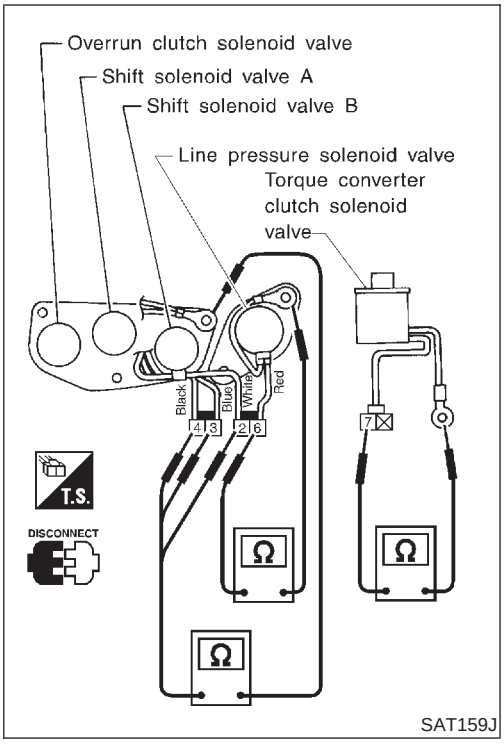

SAT159J

Component Inspection

NBAT0050

SOLENOID VALVES

NBAT0050S01

- For removal, refer to AT-259.

Resistance Check

NBAT0050S0101

- Check resistance between terminals (3, 2 or 6) and ground.

Solenoid valve	Terminal No.		Resistance (Approx.)
Shift solenoid valve A	3	Ground	20 - 40Ω
Shift solenoid valve B	2		
Line pressure solenoid valve	6		2.5 - 5Ω

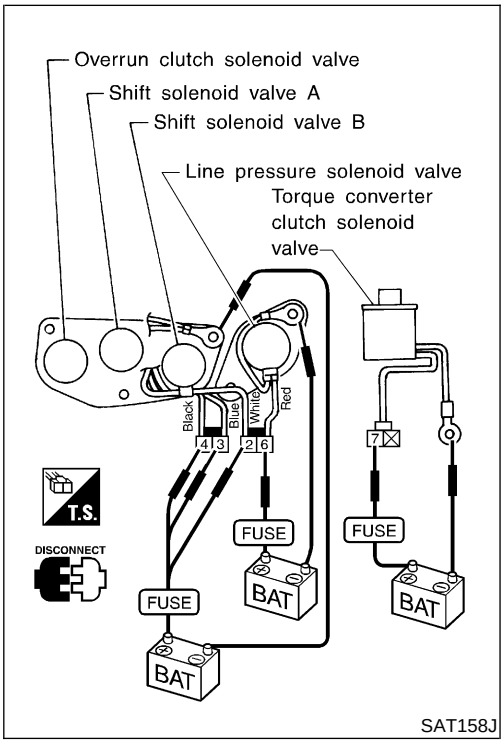

SAT158J

Operation Check

NBAT0050S0102

- Check solenoid valve by listening for its operating sound while applying battery voltage to the terminals (3, 2 or 6) and ground.

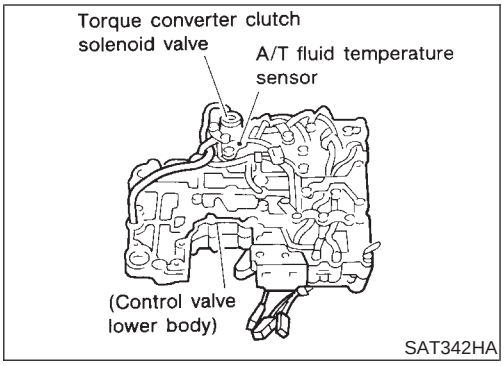

Description

NBAT0051

The torque converter clutch solenoid valve is activated, with the gear in "D_4", by the TCM in response to signals sent from the vehicle speed and throttle position sensors. Lock-up piston operation will then be controlled.
Lock-up operation, however, is prohibited when A/T fluid temperature is too low.
When the accelerator pedal is depressed (less than 2/8) in lock-up condition, the engine speed should not change abruptly. If there is a big jump in engine speed, there is no lock-up.

CONSULT REFERENCE VALUE IN DATA MONITOR MODE

NBAT0051S02

Remarks: Specification data are reference values.

Monitor item	Condition	Specification
Torque converter clutch solenoid valve duty	Lock-up "OFF" ↓ Lock-up "ON"	Approximately 4% ↓ Approximately 94%

TCM TERMINALS AND REFERENCE VALUE

NBAT0051S03

Remarks: Specification data are reference values.

Terminal No.	Wire color	Item	Condition		Judgement standard
3	G/OR	Torque converter clutch solenoid valve		When A/T performs lock-up.	8 - 15V
				When A/T does not perform lock-up.	1V or less

ON BOARD DIAGNOSIS LOGIC

NBAT0051S04

Diagnostic trouble code	Malfunction is detected when ...	Check item (Possible cause)
: TCC SOLENOID/CIRC	TCM detects an improper voltage drop when it tires to operate the solenoid valve.	• Harness or connectors (The solenoid circuit is open or shorted.) • Torque converter clutch solenoid valve
: P0740		

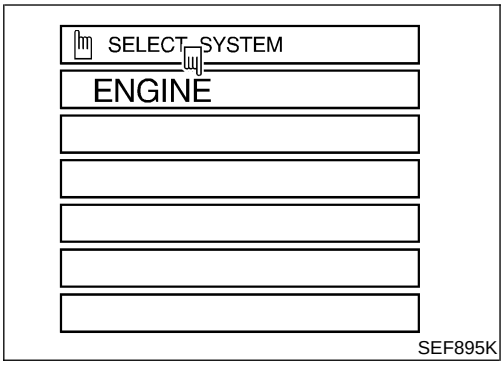

SEF895K

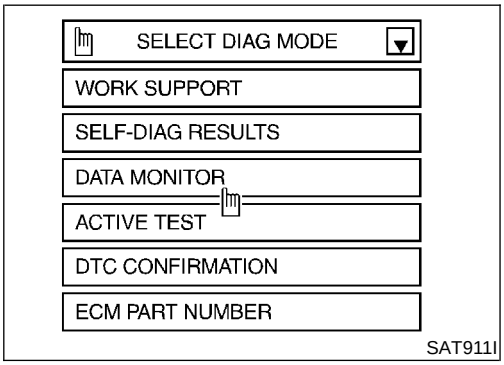

SAT911I

DIAGNOSTIC TROUBLE CODE (DTC) CONFIRMATION PROCEDURE

NBAT0051S01

NOTE:

If "DIAGNOSTIC TROUBLE CODE CONFIRMATION PROCEDURE" has been previously conducted, always turn ignition switch "OFF" and wait at least 5 seconds before conducting the next test.

After the repair, perform the following procedure to confirm the malfunction is eliminated.

With CONSULT

1) Turn ignition switch "ON".
2) Select "DATA MONITOR" mode for "ENGINE" with CONSULT and wait at least 1 second.

With GST

Follow the procedure "With CONSULT".

Wiring Diagram — AT — TCV

NBAT0194

AT-TCV-01

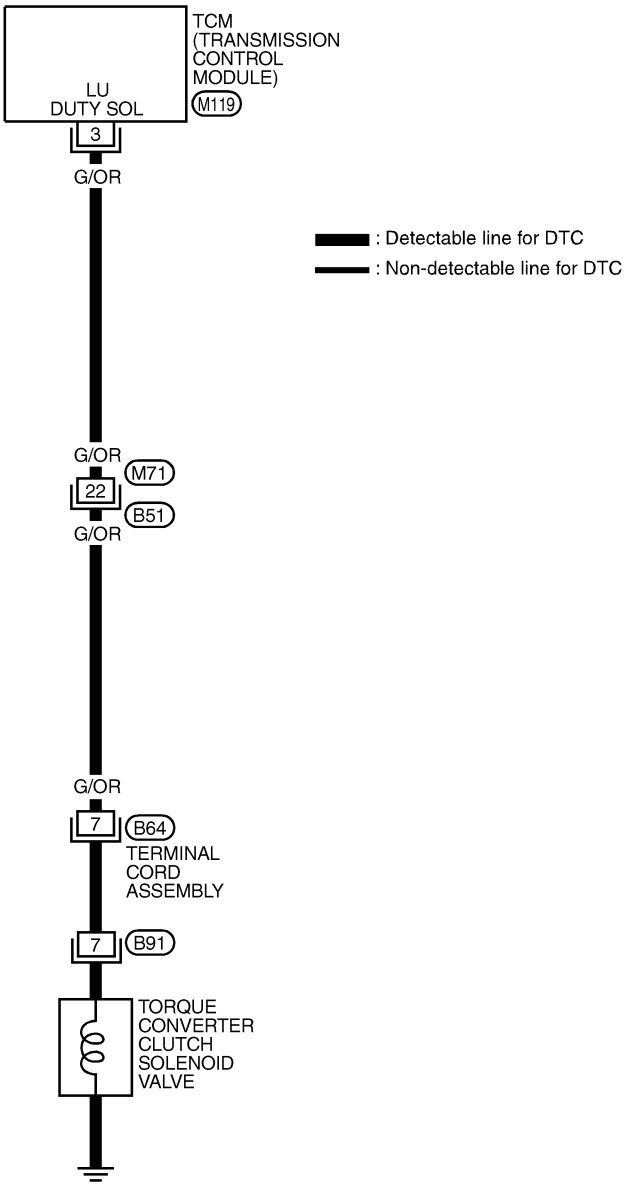

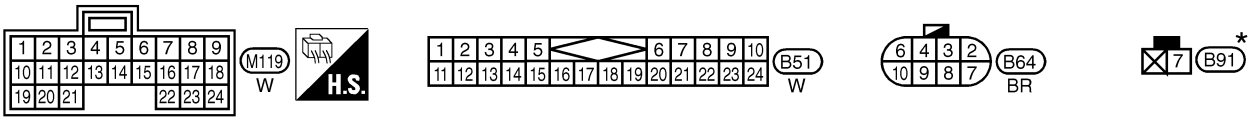

★ : This connector is not shown in "HARNESS LAYOUT" in EL section.

MAT735A

Diagnostic Procedure

NBAT0052

1	CHECK GROUND CIRCUIT

1. Turn ignition switch to “OFF” position.
2. Disconnect terminal cord assembly connector on the right side of transfer assembly.
3. Check resistance between terminal 7 and ground.

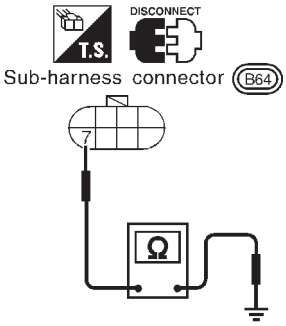

SAT156J

Is resistance approx. 10 - 20 Ω?

Yes	▶	GO TO 2.
No	▶	1. Remove oil pan. Refer to AT-259. 2. Check the following items: ● Torque converter clutch solenoid valve Refer to “Component Inspection”, AT-151. ● Harness of terminal cord assembly for short or open

2	CHECK RESISTANCE

1. Turn ignition switch to “OFF” position.
2. Disconnect TCM harness connector.
3. Check resistance between terminal 7 and TCM harness connector terminal 3.

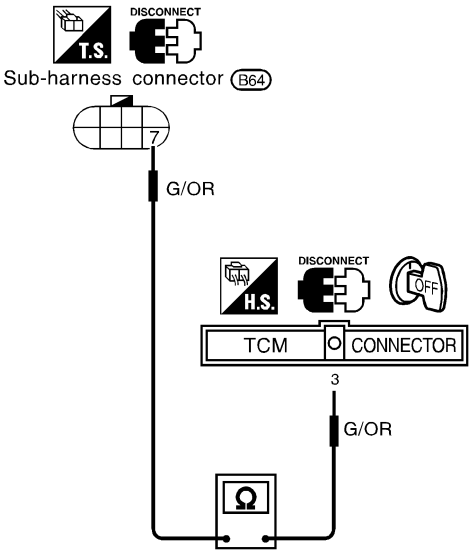

SAT521J

If OK, check harness for short to ground and short to power.

Is resistance approx. 0Ω?

Yes	▶	GO TO 3.
No	▶	Repair open circuit or short to ground or short to power in harness or connectors.

3	CHECK DTC	
Perform Diagnostic Trouble Code (DTC) confirmation procedure, AT-148.		
OK or NG		
OK	▶	**INSPECTION END**
NG	▶	1. Perform TCM input/output signal inspection. 2. If NG, recheck TCM pin terminals for damage or loose connection with harness connector.

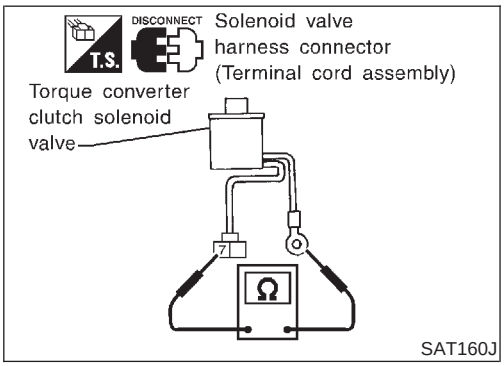

SAT160J

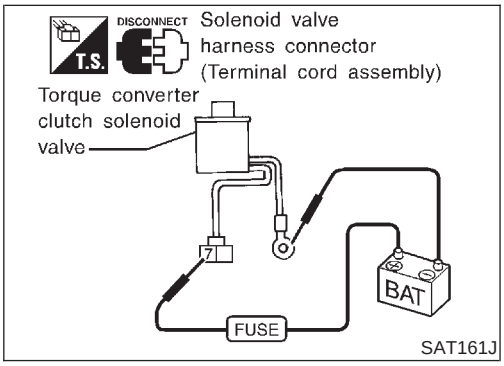

SAT161J

Component Inspection

TORQUE CONVERTER CLUTCH SOLENOID VALVE

NBAT0053
NBAT0053S01

- For removal, refer to AT-259.

Resistance Check

NBAT0053S0101

- Check resistance between terminal 7 and ground.

Solenoid valve	Terminal No.		Resistance (Approx.)
Torque converter clutch solenoid valve	7	Ground	10 - 20Ω

Operation Check

NBAT0053S0102

- Check solenoid valve by listening for its operating sound while applying battery voltage to the terminal 7 and ground.

Description

NBAT0054

- This is an OBD-II self-diagnostic item and not available in TCM self-diagnosis.
- This malfunction will not be detected while the O/D OFF indicator lamp is indicating another self-diagnosis malfunction.
- This malfunction is detected when the A/T does not shift into fourth gear position or the torque converter clutch does not lock up as instructed by the TCM. This is not caused by electrical malfunction (circuits open or shorted) but by mechanical malfunction such as control valve sticking, improper solenoid valve operation, malfunctioning oil pump or torque converter clutch, etc.

CONSULT REFERENCE VALUE IN DATA MONITOR MODE

NBAT0054S02

Remarks: Specification data are reference values.

Monitor item	Condition	Specification
Torque converter clutch solenoid valve duty	Lock-up “OFF” ↓ Lock-up “ON”	Approximately 4% ↓ Approximately 94%

TCM TERMINALS AND REFERENCE VALUE

NBAT0054S03

Remarks: Specification data are reference values.

Terminal No.	Wire color	Item	Condition		Judgement standard
1	G/Y	Line pressure solenoid valve		When releasing accelerator pedal after warming up engine.	1.5 - 2.5V
				When depressing accelerator pedal fully after warming up engine.	0.5V or less
2	BR/Y	Line pressure solenoid valve (with dropping resistor)		When releasing accelerator pedal after warming up engine.	5 - 14V
				When depressing accelerator pedal fully after warming up engine.	0.5V or less
3	G/OR	Torque converter clutch solenoid valve		When A/T performs lock-up.	8 - 15V
				When A/T does not perform lock- up.	1V or less

ON BOARD DIAGNOSIS LOGIC

NBAT0054S04

This diagnosis monitors actual gear position by checking the torque converter slip ratio calculated by TCM as follows:
Torque converter slip ratio = A x C/B
A: Output shaft revolution signal from revolution sensor
B: Engine speed signal from ECM
C: Gear ratio determined as gear position which TCM supposes
If the actual gear position is much lower than the position (4th) supposed by TCM, the slip ratio will be much less than normal. In case the ratio does not reach the specified value, TCM judges this diagnosis malfunction.
This malfunction will be caused when shift solenoid valve B is stuck closed.

Gear position supposed by TCM	1	2	3	4
In case of gear position with no malfunctions	1	2	3	4
In case of gear position with shift solenoid valve B stuck closed	1	2	2	1*

*: P0744 is detected.

Diagnostic trouble code	Malfunction is detected when ...	Check item (Possible cause)
: A/T TCC S/V FNCTN	A/T cannot perform lock-up even if electrical circuit is good.	• Line pressure solenoid valve • Torque converter clutch solenoid valve • Each clutch • Hydraulic control circuit
: P0744		

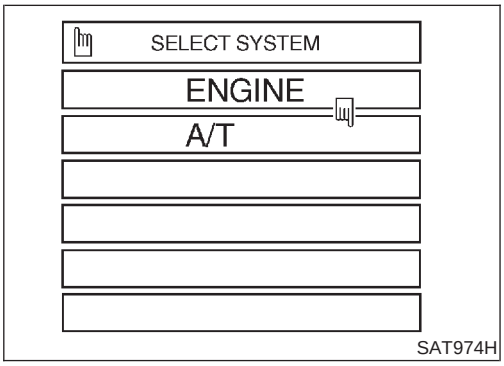

SAT974H

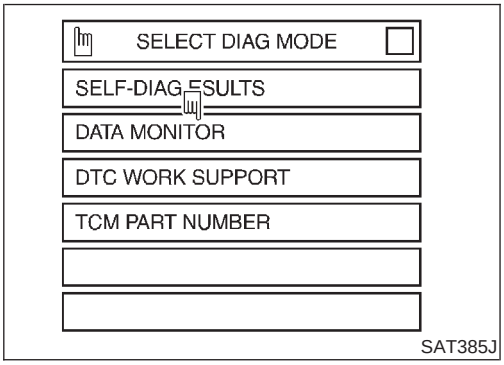

SAT385J

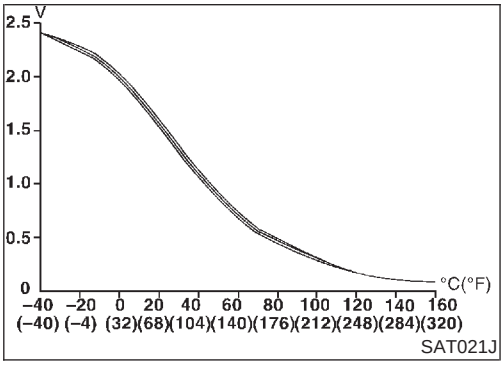

SAT021J

DIAGNOSTIC TROUBLE CODE (DTC) CONFIRMATION PROCEDURE

NBAT0054S01

CAUTION:

Always drive vehicle at a safe speed.

NOTE:

If "DIAGNOSTIC TROUBLE CODE CONFIRMATION PROCEDURE" has been previously conducted, always turn ignition switch "OFF" and wait at least 5 seconds before conducting the next test.

After the repair, perform the following procedure to confirm the malfunction is eliminated.

With CONSULT

1) Start engine and select "DATA MONITOR" mode for "A/T" with CONSULT.
2) Make sure that output voltage of A/T fluid temperature sensor is within the range below.
   FLUID TEMP SEN: 0.4 - 1.5V
   If out of range, drive the vehicle to decrease the voltage (warm up the fluid) or stop engine to increase the voltage (cool down the fluid).
3) Select "TCC S/V FNCTN P0744" of "DTC WORK SUPPORT" mode for "A/T" with CONSULT and touch "START".
4) Accelerate vehicle to more than 80 km/h (50 MPH) and maintain the following condition continuously until "TESTING" has turned to "COMPLETED". (It will take approximately 30 seconds after "TESTING" shows.)
   THROTTLE POSI: 1.0/8 - 2.0/8 (at all times during step 4)
   Selector lever: D position (OD "ON")
   TCC S/V DUTY: More than 94%
   VHCL/S SE·A/T: Constant speed of more than 80 km/h (50 MPH)

- **Check that "GEAR" shows "4".**
- **For shift schedule, refer to SDS, AT-339.**

- **If "TESTING" does not appear on CONSULT for a long time, select "SELF-DIAG RESULTS". In case a 1st trip DTC other than P0744 is shown, refer to applicable "TROUBLE DIAGNOSIS FOR DTC".**

5) Make sure that "OK" is displayed. (If "NG" is displayed, refer to "DIAGNOSTIC PROCEDURE".)
   Refer to "DIAGNOSTIC PROCEDURE", AT-156.
   Refer to shift schedule, AT-339.

With GST

Follow the procedure "With CONSULT".

Wiring Diagram — AT — TCCSIG

NBAT0195

AT-TCCSIG-01

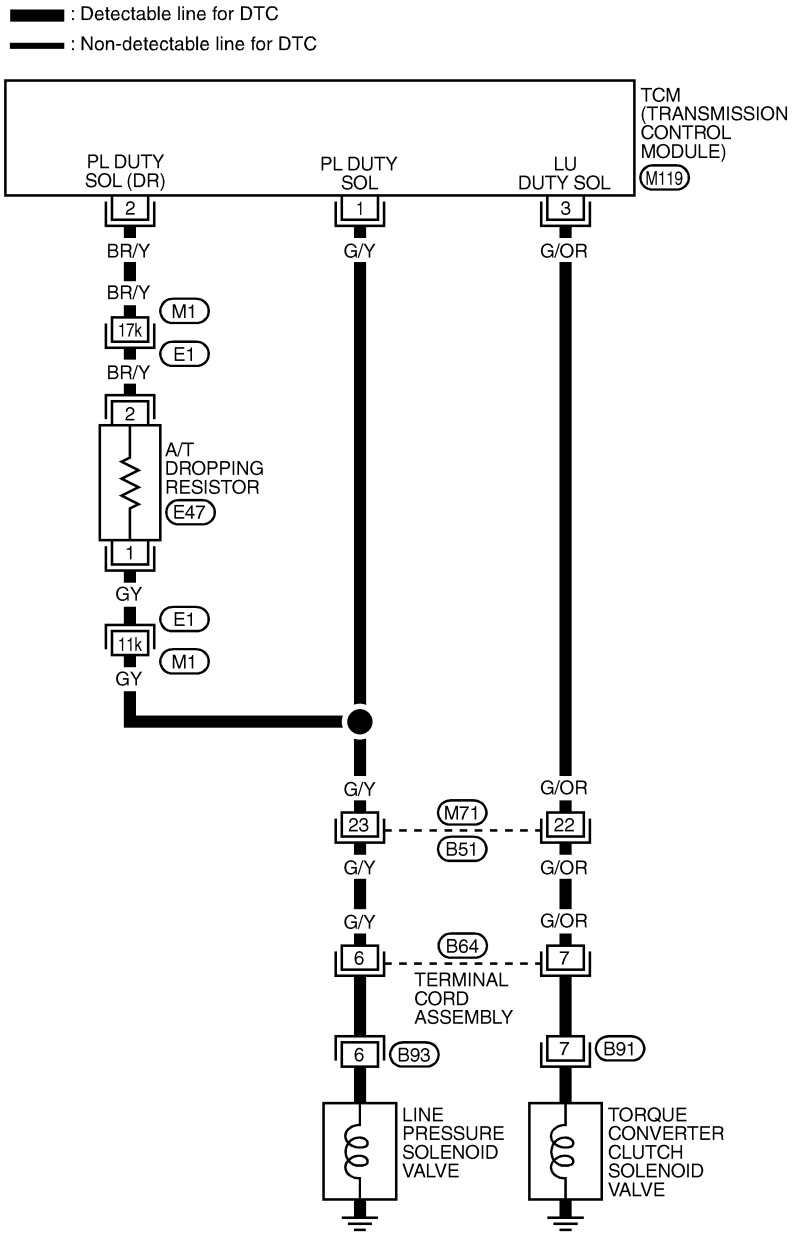

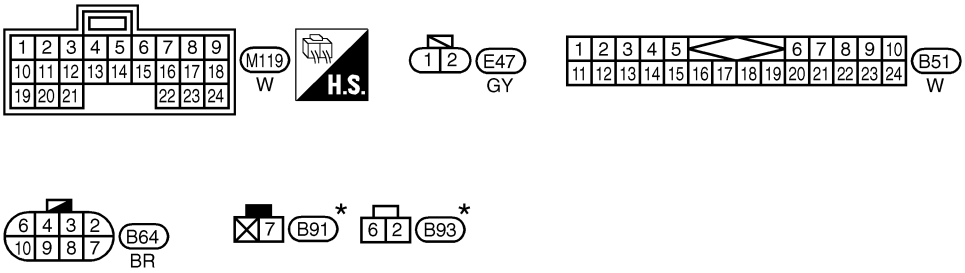

★ : This connector is not shown in "HARNESS LAYOUT" in EL section.

Refer to last page (Foldout page).
M1 , E1

MAT736A

Diagnostic Procedure

=NBAT0055

1	CHECK SHIFT UP (D_3 TO D_4)

During “Cruise test − Part 1”, AT-71.
Does A/T shift from D_3 to D_4 at the specified speed?

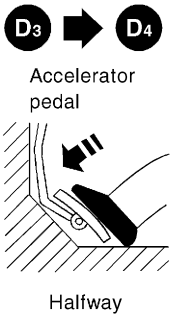

SAT988H

Yes or No

Yes	▶	• GO TO 10. • And check for proper lock-up.
No	▶	GO TO 2.

2	CHECK LINE PRESSURE

Perform line pressure test. Refer to AT-62.

OK or NG

OK	▶	GO TO 3.
NG	▶	GO TO 6.

3	CHECK CONTROL VALVE

1. Disassemble control valve assembly. Refer to AT-284.
2. Check to ensure that:
- Valve, sleeve and plug slide along valve bore under their own weight.
- Valve, sleeve and plug are free from burrs, dents and scratches.
- Control valve springs are free from damage, deformation and fatigue.
- Hydraulic line is free from obstacles.

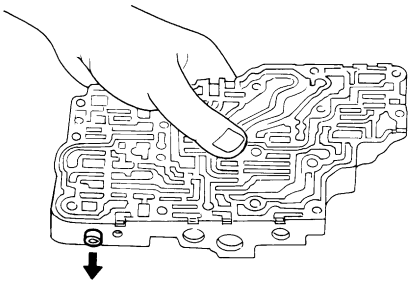

SAT367H

OK or NG

OK	▶	GO TO 4.
NG	▶	Repair control valve.

4	CHECK SHIFT UP (D_3 TO D_4)	
Does A/T shift from D_3 to D_4 at the specified speed?		
Yes or No		
Yes	▶	GO TO 5.
No	▶	Check control valve again. Repair or replace control valve assembly.

5	CHECK DTC	
Perform Diagnostic Trouble Code (DTC) confirmation procedure, AT-153.		
OK or NG		
OK	▶	**INSPECTION END**
NG	▶	• GO TO 10. • And check for proper lock-up.

6	CHECK LINE PRESSURE SOLENOID VALVE	
1. Remove control valve assembly. Refer to AT-259. 2. Check line pressure solenoid valve operation. Refer to AT-160.		

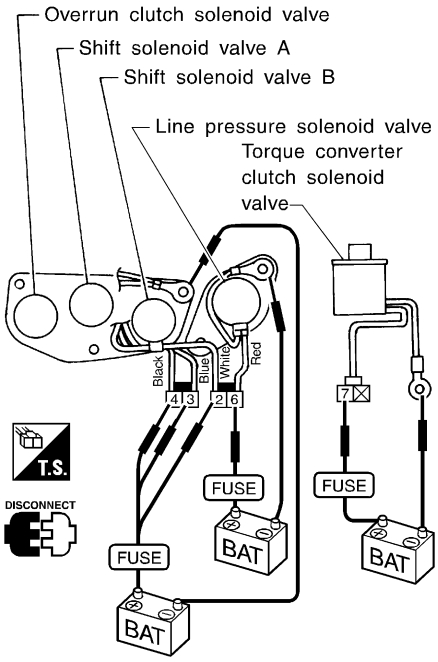

SAT158J

OK or NG		
OK	▶	GO TO 7.
NG	▶	Replace solenoid valve assembly.

7	CHECK CONTROL VALVE

1. Disassemble control valve assembly. Refer to AT-284.
2. Check line pressure circuit valves for sticking.
- Pressure regulator valve
- Pilot valve
- Pressure modifier valve

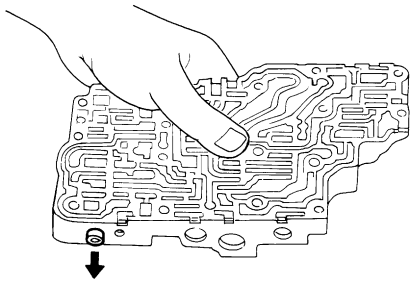

SAT367H

OK or NG

OK	▶	GO TO 8.
NG	▶	Repair control valve.

8	CHECK SHIFT UP (D_3 TO D_4)

Does A/T shift from D_3 to D_4 at the specified speed?

Yes or No

Yes	▶	GO TO 9.
No	▶	Check control valve again. Repair or replace control valve assembly.

9	CHECK DTC

Perform Diagnostic Trouble Code (DTC) confirmation procedure, AT-153.

OK or NG

OK	▶	**INSPECTION END**
NG	▶	• GO TO 10. • And check for proper lock-up.

10	CHECK LOCK-UP CONDITION

During "Cruise test − Part 1", AT-71,
Does A/T perform lock-up at the specified speed?

Yes or No

Yes	▶	Perform "Cruise test − Part 1" again and return to the start point of this flow chart.
No	▶	GO TO 11.

11	CHECK TORQUE CONVERTER CLUTCH SOLENOID VALVE

1. Remove control valve assembly. Refer to AT-259.
2. Check torque converter clutch solenoid valve operation.
   Refer to AT-160.

OK or NG

OK	▶	GO TO 12.
NG	▶	Replace solenoid valve assembly.

12	CHECK CONTROL VALVE

1. Disassemble control valve assembly. Refer to AT-284.
2. Check control valves for sticking.
- Torque converter clutch control valve
- Torque converter clutch relief valve

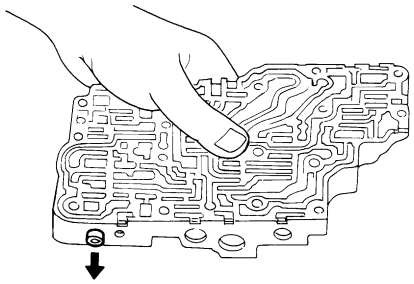

SAT367H

OK or NG

OK	▶	GO TO 13.
NG	▶	Repair control valve

13	CHECK LOCK-UP CONDITION

Does A/T perform lock-up at the specified speed?

Yes or No

Yes	▶	GO TO 14.
No	▶	Check control valve again. Repair or replace control valve assembly.

14	CHECK DTC

Perform Diagnostic Trouble Code (DTC) confirmation procedure, AT-153.

OK or NG

OK	▶	**INSPECTION END**
NG	▶	Perform "Cruise test — Part 1" again and return to the start point of this flow chart.

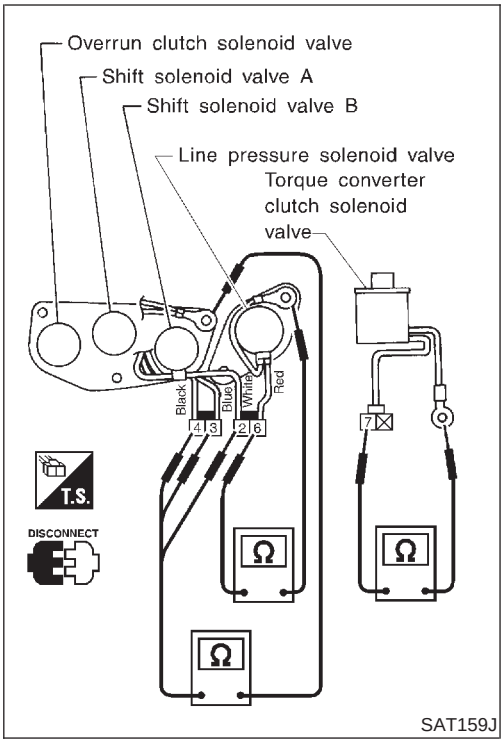

SAT159J

Component Inspection

NBAT0056

SOLENOID VALVES

NBAT0056S01

- For removal, refer to AT-259.

Resistance Check

NBAT0056S0101

- Check resistance between terminals (6 or 7) and ground.

Solenoid valve	Terminal No.		Resistance (Approx.)
Line pressure solenoid valve	6	Ground	2.5 - 5Ω
Torque converter clutch solenoid valve	7		10 - 20Ω

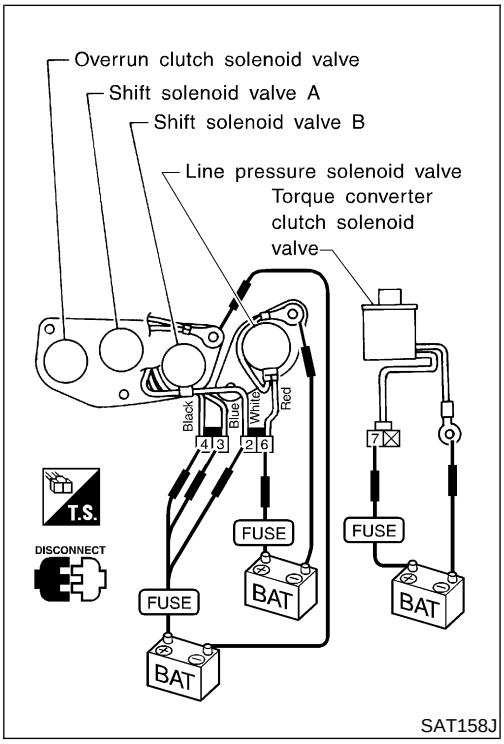

SAT158J

Operation Check

NBAT0056S0102

- Check solenoid valve by listening for its operating sound while applying battery voltage to the terminals (6 or 7) and ground.

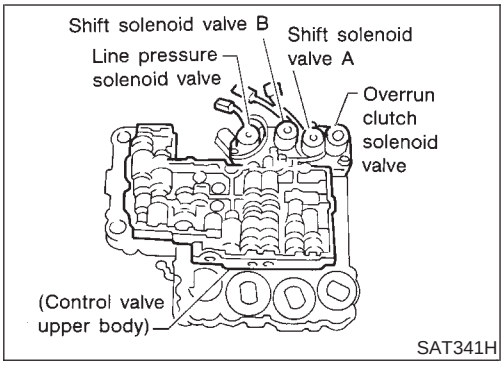

Description

NBAT0057

The line pressure solenoid valve regulates the oil pump discharge pressure to suit the driving condition in response to a signal sent from the TCM.

The line pressure duty cycle value is not consistent when the closed throttle position switch is "ON". To confirm the line pressure duty cycle at low pressure, the accelerator (throttle) should be open until the closed throttle position switch is "OFF".

CONSULT REFERENCE VALUE IN DATA MONITOR MODE

NBAT0057S02

Remarks: Specification data are reference values.

Monitor item	Condition	Specification
Line pressure solenoid valve duty	Small throttle opening (Low line pressure) ↓ Large throttle opening (High line pressure)	Approximately 24% ↓ Approximately 95%

NOTE:

The line pressure duty cycle value is not consistent when the closed throttle position switch is "ON". To confirm the line pressure duty cycle at low pressure, the accelerator (throttle) should be open until the closed throttle position switch is "OFF".

TCM TERMINALS AND REFERENCE VALUE

NBAT0057S03

Remarks: Specification data are reference values.

Terminal No.	Wire color	Item	Condition		Judgement standard
1	G/Y	Line pressure solenoid valve		When releasing accelerator pedal after warming up engine.	1.5 - 2.5V
				When depressing accelerator pedal fully after warming up engine.	0.5V or less
2	BR/Y	Line pressure solenoid valve (with dropping resistor)		When releasing accelerator pedal after warming up engine.	5 - 14V
				When depressing accelerator pedal fully after warming up engine.	0.5V or less

ON BOARD DIAGNOSIS LOGIC

NBAT0057S04

Diagnostic trouble code	Malfunction is detected when ...	Check item (Possible cause)
: L/PRESS SOL/CIRC	TCM detects an improper voltage drop when it tries to operate the solenoid valve.	• Harness or connectors (The solenoid circuit is open or shorted.) • Line pressure solenoid valve
: P0745		

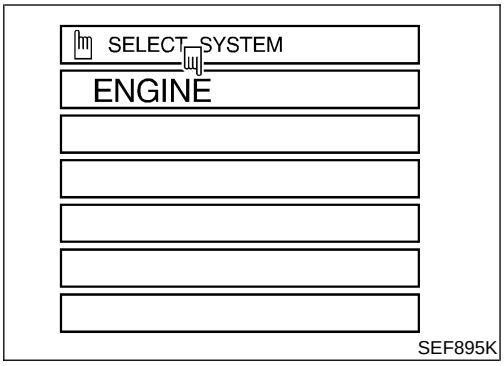

SEF895K

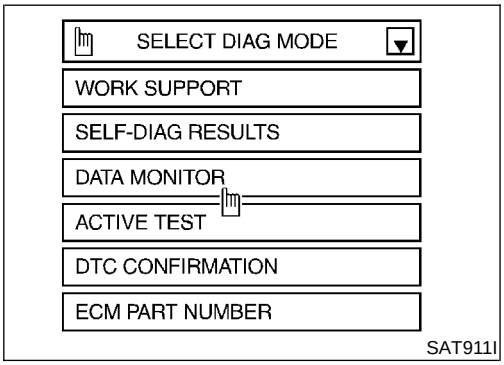

SAT911I

DIAGNOSTIC TROUBLE CODE (DTC) CONFIRMATION PROCEDURE

NBAT0057S01

NOTE:

If "DIAGNOSTIC TROUBLE CODE CONFIRMATION PROCEDURE" has been previously conducted, always turn ignition switch "OFF" and wait at least 5 seconds before conducting the next test.

After the repair, perform the following procedure to confirm the malfunction is eliminated.

With CONSULT

1) Turn ignition switch "ON" and select "DATA MONITOR" mode for "ENGINE" with CONSULT.
2) Depress accelerator pedal completely and wait at least 1 second.

With GST

Follow the procedure "With CONSULT".

Wiring Diagram — AT — LPSV

NBAT0196

AT-LPSV-01

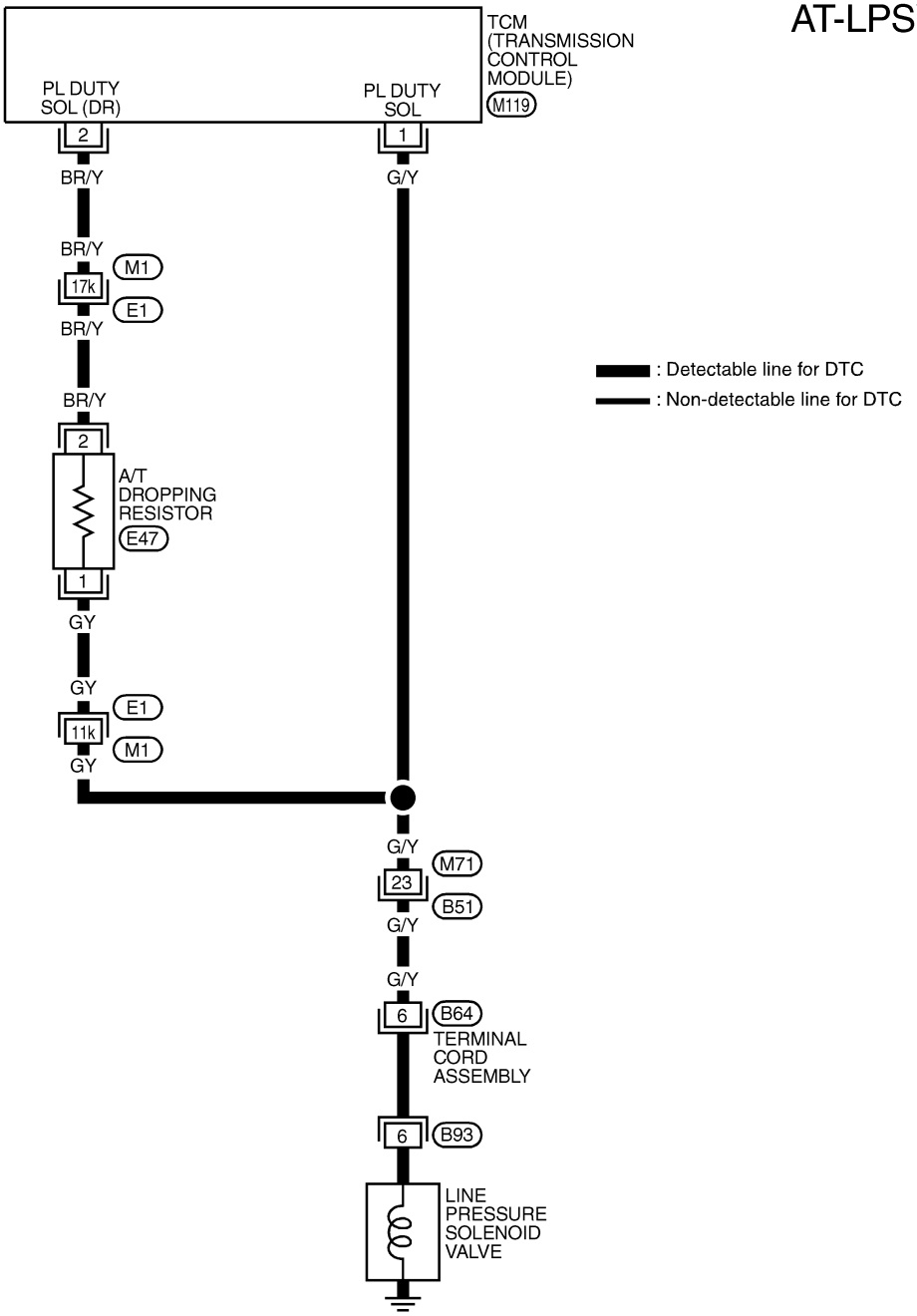

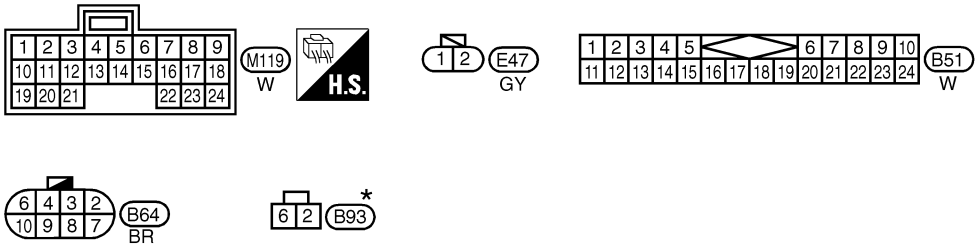

* : This connector is not shown in "HARNESS LAYOUT" in EL section.

Refer to last page (Foldout page).
M1 , E1

MAT737A

Diagnostic Procedure

NBAT0058

1	CHECK GROUND CIRCUIT

1. Turn ignition switch to “OFF” position.
2. Disconnect terminal cord assembly connector on the right side of transfer assembly.
3. Check resistance between terminal 6 and ground.

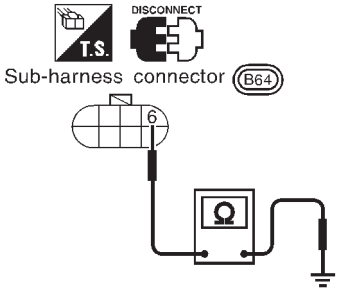

SAT162J

Is resistance approx. 2.5 - 5Ω?

Yes	▶	GO TO 2.
No	▶	1. Remove control valve assembly. Refer to AT-259. 2. Check the following items: ● Line pressure solenoid valve Refer to “Component Inspection”, AT-165. ● Harness of terminal cord assembly for short or open

2	CHECK POWER SOURCE CIRCUIT

1. Turn ignition switch to “OFF” position.
2. Disconnect TCM harness connector.
3. Check resistance between terminal 6 and TCM harness connector terminal 2.

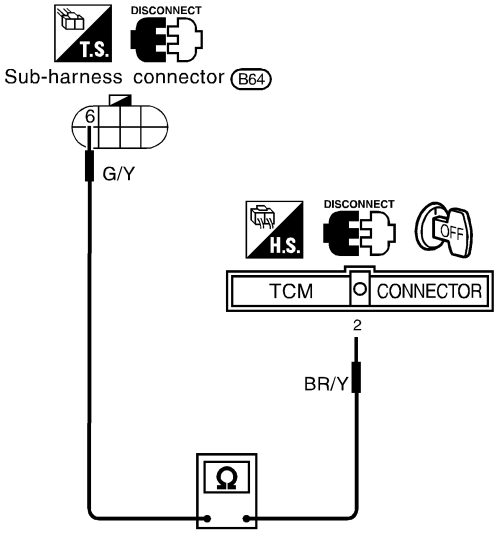

SAT522J

Is resistance approx. 11.2 - 12.8Ω?

Yes	▶	GO TO 3.
No	▶	**Check the following items:** ● Dropping resistor Refer to “Component Inspection”, AT-165. ● Harness for short or open between TCM terminal 2 and terminal cord assembly (Main harness)

3	CHECK POWER SOURCE CIRCUIT

1. Turn ignition switch to "OFF" position.
2. Check resistance between terminal 6 and TCM harness connector terminal 1.

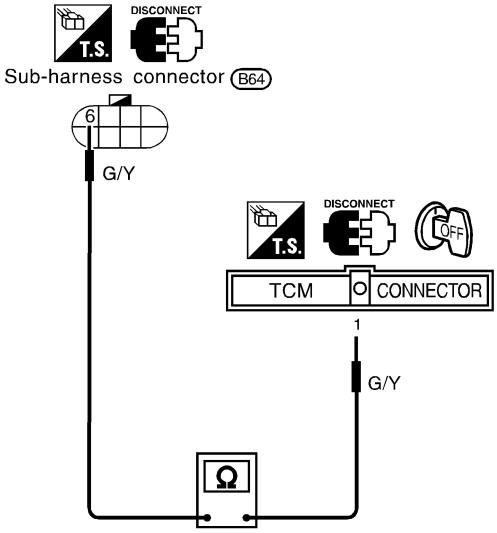

SAT523J

Is resistance approx. 0Ω?

Yes	▶	GO TO 4.
No	▶	Repair or replace harness between TCM terminal 1 and terminal cord assembly.

4	CHECK DTC

Perform Diagnostic Trouble Code (DTC) confirmation procedure, AT-162.

OK or NG

OK	▶	**INSPECTION END**
NG	▶	1. Perform TCM input/output signal inspection. 2. If NG, recheck TCM pin terminals for damage or loose connection with harness connector.

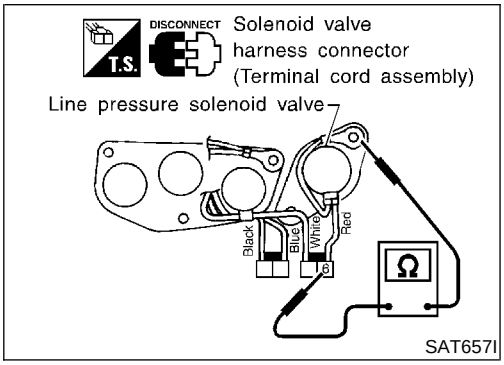

SAT657I

Component Inspection

NBAT0059

LINE PRESSURE SOLENOID VALVE

NBAT0059S01

- For removal, refer to AT-259.

Resistance Check

NBAT0059S0101

- Check resistance between terminal 6 and ground.

Solenoid valve	Terminal No.		Resistance (Approx.)
Line pressure solenoid valve	6	Ground	2.5 - 5Ω

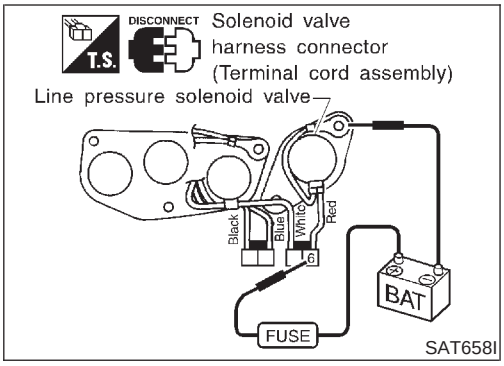

Operation Check

NBAT0059S0102

- Check solenoid valve by listening for its operating sound while applying battery voltage to the terminal 6 and ground.

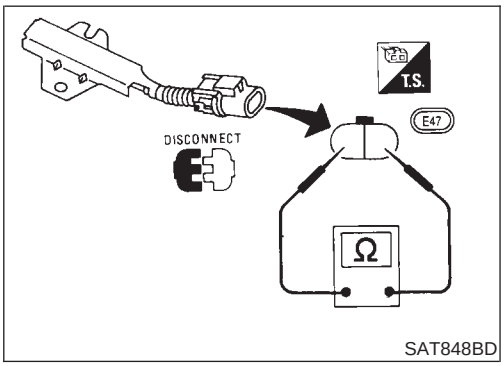

DROPPING RESISTOR

NBAT0059S02

- Check resistance between two terminals.

  Resistance: 11.2 - 12.8Ω

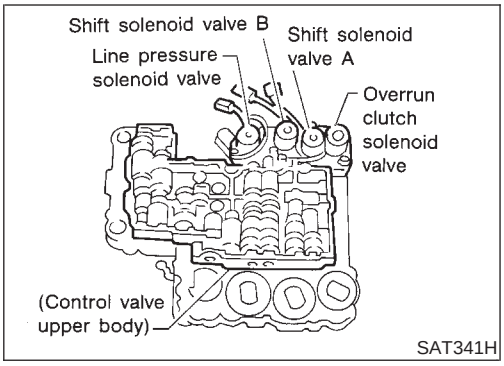

Description

NBAT0060

Shift solenoid valves A and B are turned "ON" or "OFF" by the TCM in response to signals sent from the PNP switch, vehicle speed and throttle position sensors. Gears will then be shifted to the optimum position.

Gear position	1	2	3	4
Shift solenoid valve A	ON (Closed)	OFF (Open)	OFF (Open)	ON (Closed)
Shift solenoid valve B	ON (Closed)	ON (Closed)	OFF (Open)	OFF (Open)

TCM TERMINALS AND REFERENCE VALUE

NBAT0060S02

Remarks: Specification data are reference values.

Terminal No.	Wire color	Item	Condition		Judgement standard
11	L/W	Shift solenoid valve A		When shift solenoid valve A operates. (When driving in "D_1" or "D_4".)	Battery voltage
				When shift solenoid valve A does not operate. (When driving in "D_2" or "D_3".)	1V or less

ON BOARD DIAGNOSIS LOGIC

NBAT0060S03

Diagnostic trouble code	Malfunction is detected when ...	Check item (Possible cause)
: SFT SOL A/CIRC : P0750	TCM detects an improper voltage drop when it tires to operate the solenoid valve.	• Harness or connectors (The solenoid circuit is open or shorted.) • Shift solenoid valve A

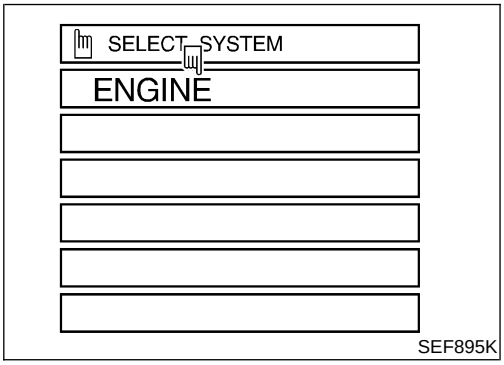

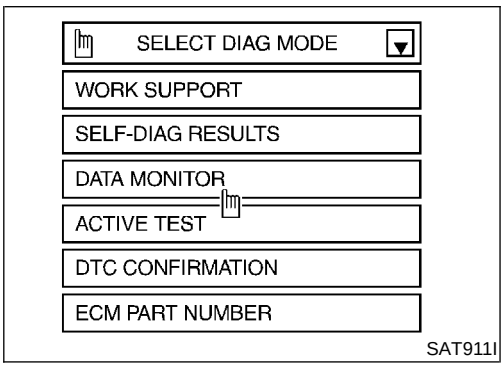

DIAGNOSTIC TROUBLE CODE (DTC) CONFIRMATION PROCEDURE

NBAT0060S01

CAUTION:

Always drive vehicle at a safe speed.

NOTE:

If "DIAGNOSTIC TROUBLE CODE CONFIRMATION PROCEDURE" has been previously conducted, always turn ignition switch "OFF" and wait at least 5 seconds before conducting the next test.

After the repair, perform the following procedure to confirm the malfunction is eliminated.

With CONSULT

1) Turn ignition switch "ON" and select "DATA MONITOR" mode for "ENGINE" with CONSULT.
2) Start engine.
3) Drive vehicle in "D" position and allow the transmission to shift "1" → "2" ("GEAR").

With GST

Follow the procedure "With CONSULT".

Wiring Diagram — AT — SSV/A

NBAT0197

AT-SSV/A-01

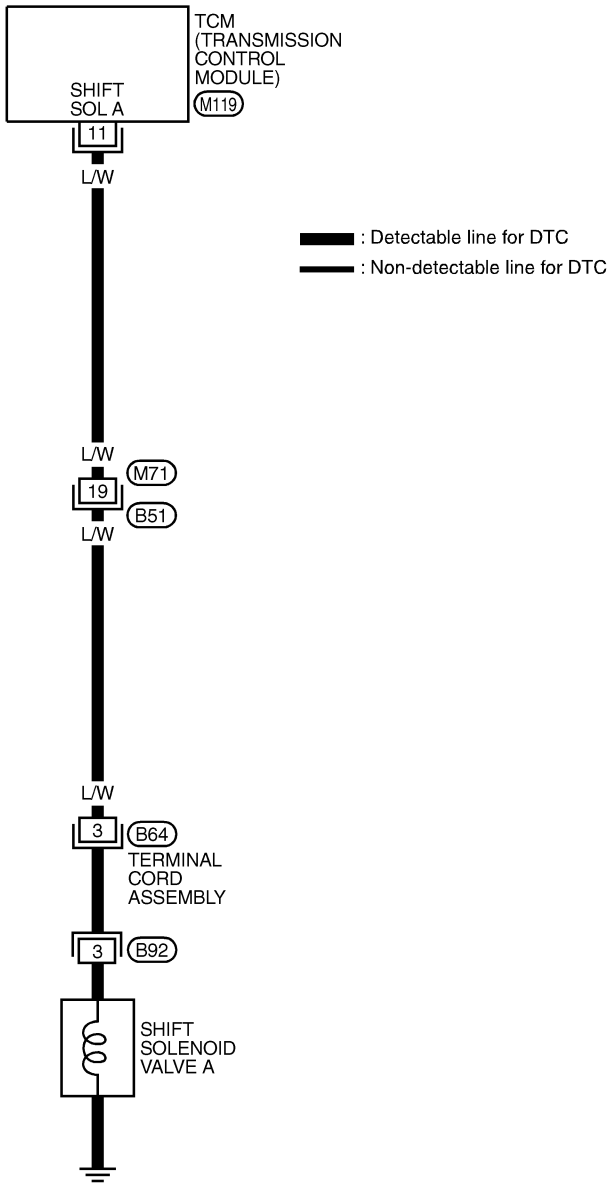

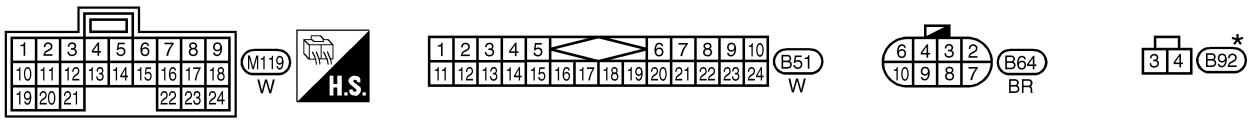

* : This connector is not shown in "HARNESS LAYOUT" in EL section.

MAT738A

Diagnostic Procedure

NBAT0061

1	CHECK GROUND CIRCUIT	
1. Turn ignition switch to “OFF” position. 2. Disconnect terminal cord assembly connector on the right side of transfer assembly. 3. Check resistance between terminal 3 and ground. 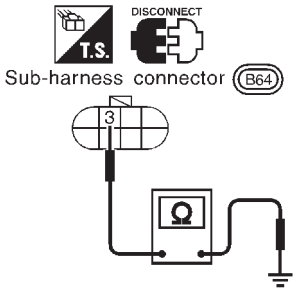 SAT164J **Is resistance approx. 20 - 40Ω?**		
Yes	▶	GO TO 2.
No	▶	1. Remove control valve assembly. Refer to AT-259. 2. Check the following items: ● Shift solenoid valve A Refer to “Component Inspection”, AT-170. ● Harness of terminal cord assembly for short or open

2	CHECK POWER SOURCE CIRCUIT	
1. Turn ignition switch to “OFF” position. 2. Disconnect TCM harness connector. 3. Check resistance between terminal 3 and TCM harness connector terminal 11. 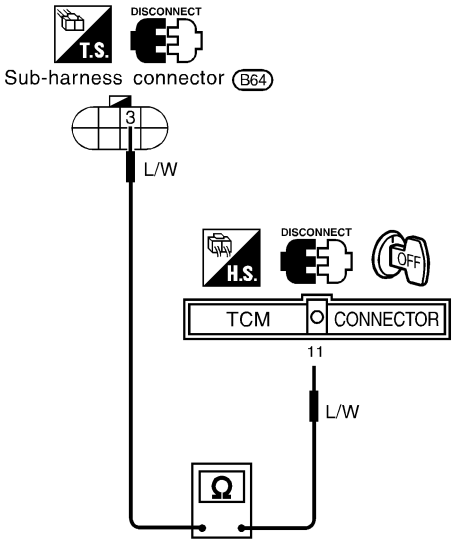 SAT524J If OK, check harness for short to ground and short to power. **Is resistance approx. 0Ω?**		
Yes	▶	GO TO 3.
No	▶	Repair open circuit or short to ground or short to power in harness or connectors.

3	CHECK DTC	
Perform Diagnostic Trouble Code (DTC) confirmation procedure, AT-167.		
OK or NG		
OK	▶	**INSPECTION END**
NG	▶	1. Perform TCM input/output signal inspection. 2. If NG, recheck TCM pin terminals for damage or loose connection with harness connector.

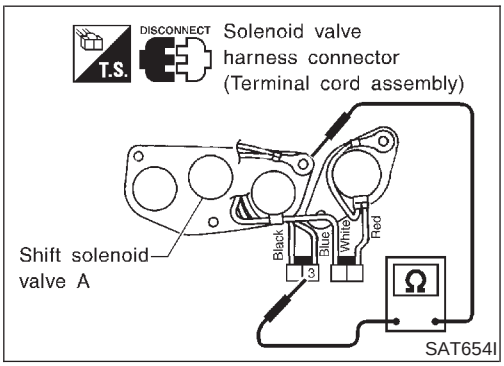

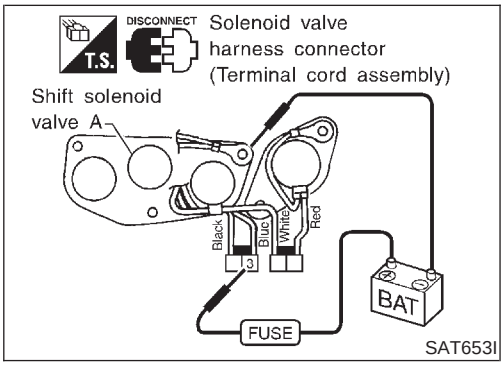

Component Inspection

NBAT0062

SHIFT SOLENOID VALVE A

NBAT0062S01

- For removal, refer to AT-259.

Resistance Check

NBAT0062S0101

- Check resistance between terminal 3 and ground.

Solenoid valve	Terminal No.		Resistance (Approx.)
Shift solenoid valve A	3	Ground	20 - 40Ω

Operation Check

NBAT0062S0102

- Check solenoid valve by listening for its operating sound while applying battery voltage to the terminal 3 and ground.

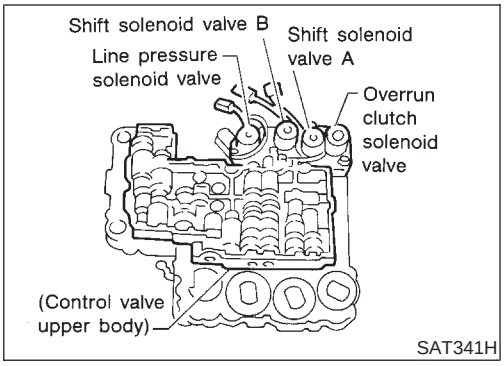

SAT341H

Description

NBAT0063

Shift solenoid valves A and B are turned "ON" or "OFF" by the TCM in response to signals sent from the PNP switch, vehicle speed and throttle position sensors. Gears will then be shifted to the optimum position.

Gear position	1	2	3	4
Shift solenoid valve A	ON (Closed)	OFF (Open)	OFF (Open)	ON (Closed)
Shift solenoid valve B	ON (Closed)	ON (Closed)	OFF (Open)	OFF (Open)

TCM TERMINALS AND REFERENCE VALUE

NBAT0063S02

Remarks: Specification data are reference values.

Terminal No.	Wire color	Item	Condition		Judgement standard
12	L/R	Shift solenoid valve B		When shift solenoid valve B operates. (When driving in "D_1" or "D_2".)	Battery voltage
				When shift solenoid valve B does not operate. (When driving in "D_3" or "D_4".)	1V or less

ON BOARD DIAGNOSIS LOGIC

NBAT0063S03

Diagnostic trouble code	Malfunction is detected when ...	Check item (Possible cause)
: SFT SOL B/CIRC	TCM detects an improper voltage drop when it tires to operate the solenoid valve.	• Harness or connectors (The solenoid circuit is open or shorted.) • Shift solenoid valve B
: P0755		

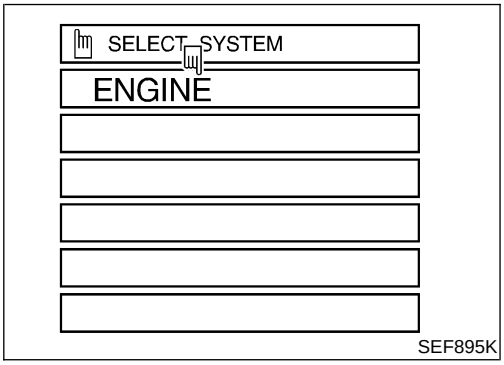

SEF895K

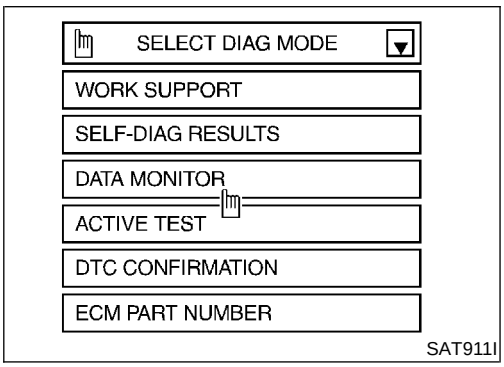

SAT911I

DIAGNOSTIC TROUBLE CODE (DTC) CONFIRMATION PROCEDURE

NBAT0063S01

CAUTION:

Always drive vehicle at a safe speed.

NOTE:

If "DIAGNOSTIC TROUBLE CODE CONFIRMATION PROCEDURE" has been previously conducted, always turn ignition switch "OFF" and wait at least 5 seconds before conducting the next test.

After the repair, perform the following procedure to confirm the malfunction is eliminated.

With CONSULT

1) Turn ignition switch "ON" and select "DATA MONITOR" mode for "ENGINE" with CONSULT.
2) Drive vehicle in "D" position and allow the transmission to shift 1 → 2 → 3 ("GEAR").

With GST

Follow the procedure "With CONSULT".

Wiring Diagram — AT — SSV/B

NBAT0198

AT-SSV/B-01

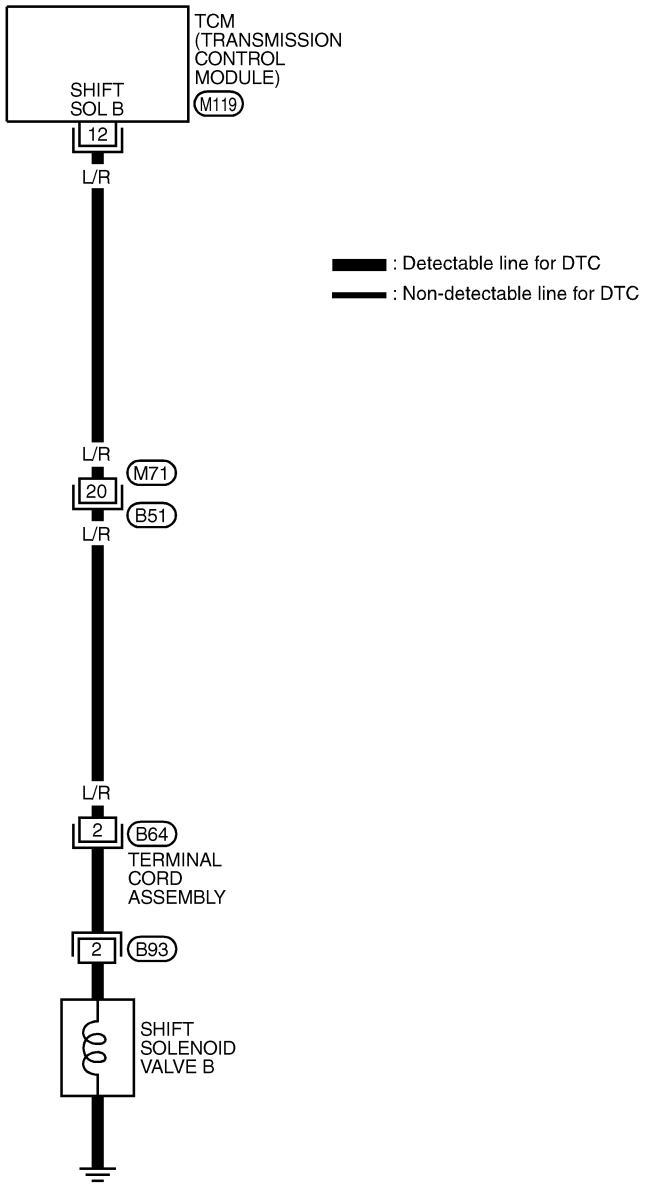

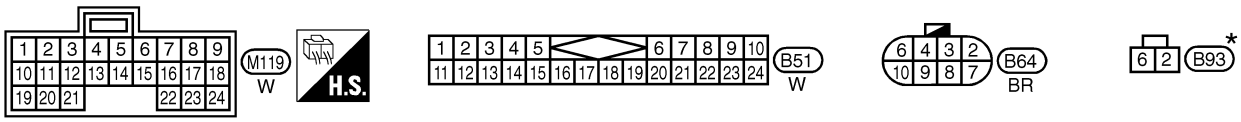

* : This connector is not shown in "HARNESS LAYOUT" in EL section.

MAT739A

Diagnostic Procedure

NBAT0064

1	CHECK GROUND CIRCUIT

1. Turn ignition switch to “OFF” position.
2. Disconnect terminal cord assembly connector on the right side of transfer assembly.
3. Check resistance between terminal 2 and ground.

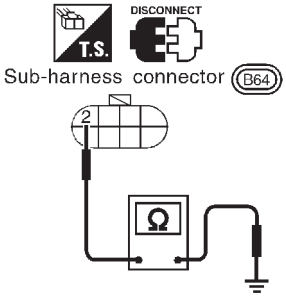

SAT166J

Is resistance approx. 20 - 40Ω?

Yes	▶	GO TO 2.
No	▶	1. Remove control valve assembly. Refer to AT-259. 2. Check the following items: ● Shift solenoid valve B Refer to “Component Inspection”, AT-174. ● Harness of terminal cord assembly for short or open

2	CHECK POWER SOURCE CIRCUIT

1. Turn ignition switch to “OFF” position.
2. Disconnect TCM harness connector.
3. Check resistance between terminal 2 and TCM harness connector terminal 12.

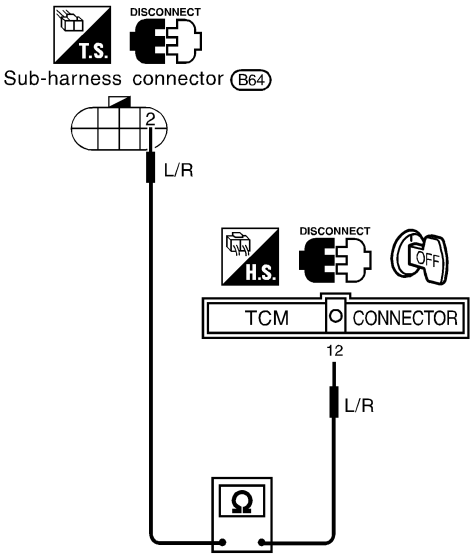

SAT525J

If OK, check harness for short to ground and short to power.

Is resistance approx. 0Ω?

Yes	▶	GO TO 3.
No	▶	Repair open circuit or short to ground or short to power in harness or connectors.

3	CHECK DTC	
Perform Diagnostic Trouble Code (DTC) confirmation procedure, AT-171.		
OK or NG		
OK	▶	**INSPECTION END**
NG	▶	1. Perform TCM input/output signal inspection. 2. If NG, recheck TCM pin terminals for damage or loose connection with harness connector.

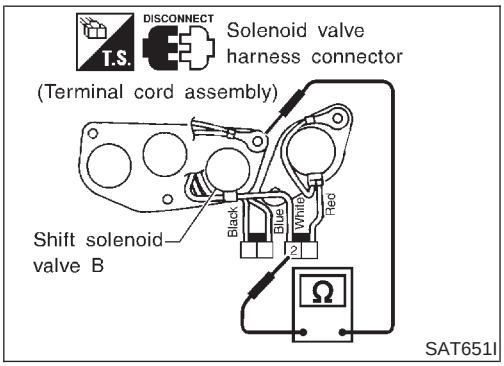

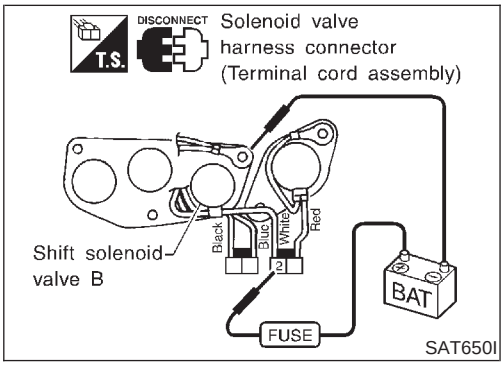

Component Inspection

NBAT0065

SHIFT SOLENOID VALVE B

NBAT0065S01

- For removal, refer to AT-259.

Resistance Check

NBAT0065S0101

- Check resistance between terminal 2 and ground.

Solenoid valve	Terminal No.		Resistance (Approx.)
Shift solenoid valve B	2	Ground	20 - 40Ω

Operation Check

NBAT0065S0102

- Check solenoid valve by listening for its operating sound while applying battery voltage to the terminal 2 and ground.

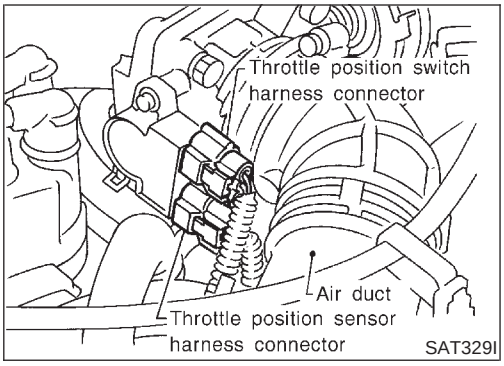

Description

NBAT0066

- Throttle position sensor
  The throttle position sensor detects the throttle valve position and sends a signal to the TCM.
- Throttle position switch
  Consists of a wide open throttle position switch and a closed throttle position switch. The wide open position switch sends a signal to the TCM when the throttle valve is open at least 1/2 of the full throttle position. The closed throttle position switch sends a signal to the TCM when the throttle valve is fully closed.

CONSULT REFERENCE VALUE IN DATA MONITOR MODE

NBAT0066S02

Remarks: Specification data are reference values.

Monitor item	Condition	Specification
Throttle position sensor	Fully-closed throttle	Approximately 0.5V
	Fully-open throttle	Approximately 4V

TCM TERMINALS AND REFERENCE VALUE

NBAT0066S03

Remarks: Specification data are reference values.

Terminal No.	Wire color	Item	Condition		Judgement standard
16	OR/W	Closed throttle position switch (in throttle position switch)		When releasing accelerator pedal after warming up engine. [Refer to “Preparation”, “TCM SELF-DIAGNOSTIC PROCEDURE (No Tools)”, AT-46.]	Battery voltage
				When depressing accelerator pedal after warming up engine. [Refer to “Preparation”, “TCM SELF-DIAGNOSTIC PROCEDURE (No Tools)”, AT-46.]	1V or less
17	OR/B	Wide open throttle position switch (in throttle position switch)		When depressing accelerator pedal more than half-way after warming up engine.	Battery voltage
				When releasing accelerator pedal after warming up engine.	1V or less
32	P/B	Throttle position sensor (Power source)		—	4.5 - 5.5V
41	P	Throttle position sensor		When depressing accelerator pedal slowly after warming up engine. (Voltage rises gradually in response to throttle position.)	Fully-closed throttle: Approximately 0.5V Fully-open throttle: Approximately 4V
42	B	Throttle position sensor (Ground)		—	—

ON BOARD DIAGNOSIS LOGIC

NBAT0066S04

Diagnostic trouble code	Malfunction is detected when ...	Check item (Possible cause)
: TP SEN/CIRC A/T	TCM receives an excessively low or high voltage from the sensor.	• Harness or connectors (The solenoid circuit is open or shorted.) • Throttle position sensor • Throttle position switch
: P1705		

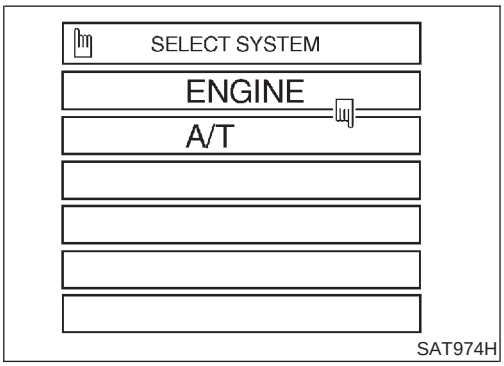

SAT974H

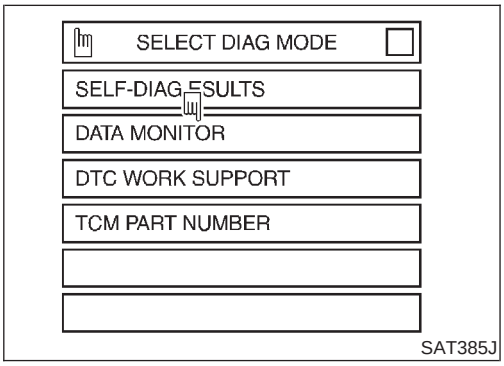

SAT385J

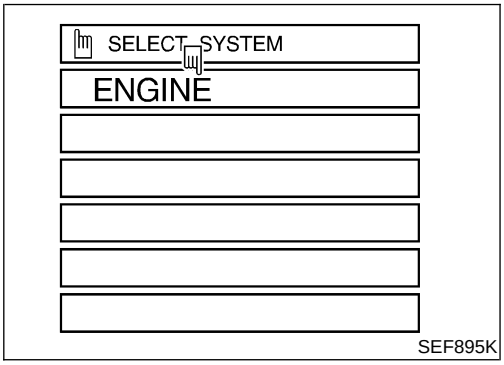

SEF895K

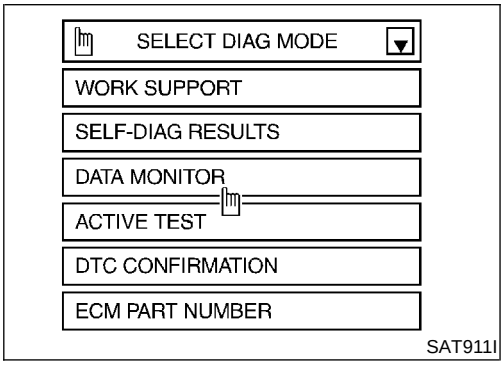

SAT911I

DIAGNOSTIC TROUBLE CODE (DTC) CONFIRMATION PROCEDURE

NBAT0066S01

CAUTION:

Always drive vehicle at a safe speed.

NOTE:

If "DIAGNOSTIC TROUBLE CODE CONFIRMATION PROCEDURE" has been previously conducted, always turn ignition switch "OFF" and wait at least 5 seconds before conducting the next test.

After the repair, perform the following procedure to confirm the malfunction is eliminated.

With CONSULT

1) Turn ignition switch "ON" and select "DATA MONITOR" mode for "A/T" with CONSULT.
2) Apply vacuum to the throttle opener, then check the following. Refer to steps 1 and 2 of "Preparation", "TCM SELF-DIAGNOSTIC PROCEDURE (No Tools)", AT-46.

Accelerator pedal condition	THRTL POS SEN	CLOSED THL/SW	W/O THRL/P·SW
Fully released	Less than 4.7V	ON	OFF
Partially depressed	0.1 - 4.6V	OFF	OFF
Fully depressed	More than 1.9 - 4.6V	OFF	ON

If the check result is NG, go to "DIAGNOSTIC PROCEDURE", AT-179.
If the check result is OK, go to following step.

3) Turn ignition switch "ON" and select "DATA MONITOR" mode for "ENGINE" with CONSULT.
4) Start engine and maintain the following conditions for at least 3 consecutive seconds. Then release accelerator pedal completely.
VHCL SPEED SE: 10 km/h (6 MPH) or more
THRTL POS SEN: Approximately 3V or less
Selector lever: D position (OD "ON")
If the check result is NG, go to "DIAGNOSTIC PROCEDURE", AT-179.
If the check result is OK, go to following step.
5) Maintain the following conditions for at least 3 consecutive seconds. Then release accelerator pedal completely.
VHCL SPEED SE: 10 km/h (6 MPH) or more
Accelerator pedal: Wide open throttle
Selector lever: D position (OD "ON")

With GST

Follow the procedure "With CONSULT".

Wiring Diagram — AT — TPS

NBAT0199

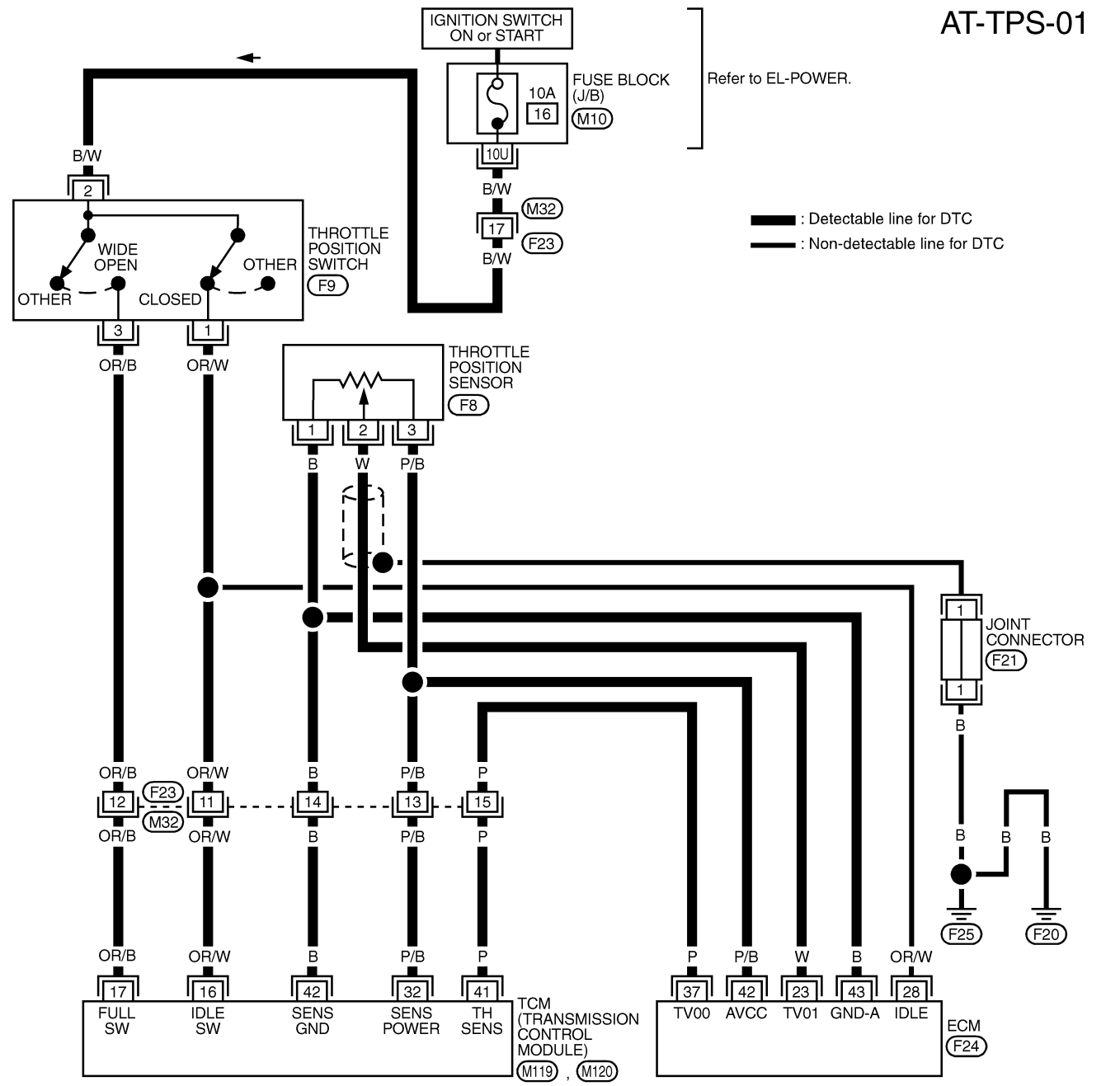

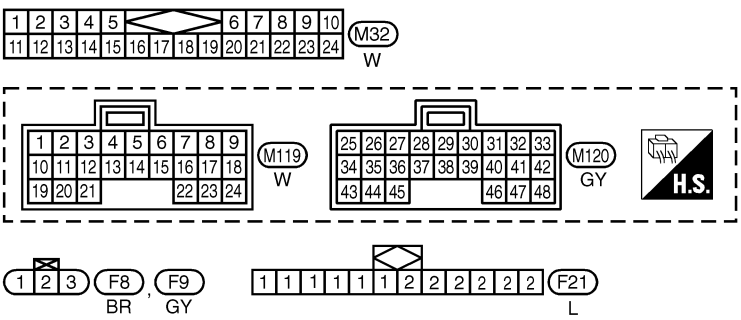

Refer to last page (Foldout page).

M10

F24

MAT740A

Diagnostic Procedure

NBAT0067

1	CHECK DTC WITH ECM	
Perform diagnostic test mode II (self-diagnostic results) for engine control. Refer to EC-70, “DESCRIPTION”.		
OK or NG		
OK	▶	GO TO 2.
NG	▶	Check throttle position sensor circuit for engine control. Refer to EC-181, “Description”.

2	CHECK INPUT SIGNAL

With CONSULT

1. Turn ignition switch to "ON" position.
   (Do not start engine.)
2. Select "ECU INPUT SIGNALS" in "DATA MONITOR" mode for "A/T" with CONSULT.
3. Read out the value of "THRTL POS SEN".

Voltage:

Fully-closed throttle:

Approximately 0.5V

Fully-open throttle:

Approximately 4V

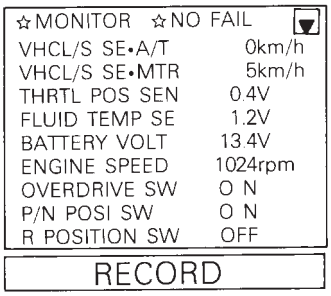

SAT076H

Without CONSULT

1. Turn ignition switch to "ON" position.
   (Do not start engine.)
2. Check voltage between TCM terminals 41 and 42 while accelerator pedal is depressed slowly.

Voltage:

Fully-closed throttle valve:

Approximately 0.5V

Fully-open throttle valve:

Approximately 4V

(Voltage rises gradually in response to throttle position.)

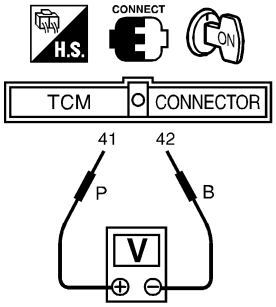

SAT513J

OK or NG

OK (With CONSULT)	▶	GO TO 3.
OK (Without CONSULT)	▶	GO TO 4.
NG	▶	Check harness for short or open between ECM and TCM regarding throttle position sensor circuit. (Main harness)

3	CHECK THROTTLE POSITION SWITCH CIRCUIT (With CONSULT)

With CONSULT

1. Turn ignition switch to "ON" position.
   (Do not start engine.)
2. Select "ECU INPUT SIGNALS" in "DATA MONITOR" mode for "A/T" with CONSULT.
3. Apply vacuum to the throttle opener, then check the following. Refer to steps 1 and 2 of "Preparation", "TCM SELF-DIAGNOSTIC PROCEDURE (No Tools)", AT-46.
4. Read out "CLOSED THL/SW" and "W/O THRL/P-SW" depressing and releasing accelerator pedal.
   Check the signal of throttle position switch is indicated properly.

Accelerator pedal condition	Data monitor	
	CLOSED THL/SW	W/O THRL/P-SW
Released	ON	OFF
Fully depressed	OFF	ON

MTBL0011

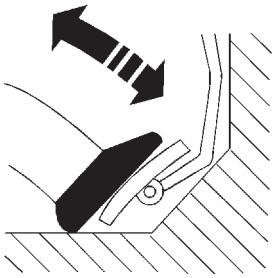

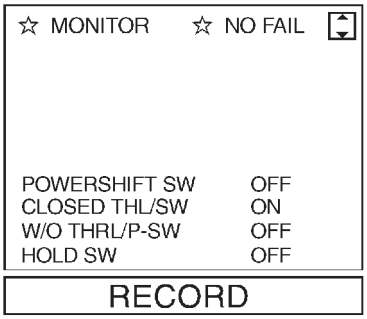

SAT052I

OK or NG

OK	▶	GO TO 5.
NG	▶	**Check the following items:** ● Throttle position switch Refer to "Component Inspection", AT-183. ● Harness for short or open between ignition switch and throttle position switch (Main harness) ● Harness for short or open between throttle position switch and TCM (Main harness)

4	CHECK THROTTLE POSITION SWITCH CIRCUIT (Without CONSULT)

Without CONSULT

1. Turn ignition switch to "ON" position.
   (Do not start engine.)
2. Check voltage between TCM terminals 16, 17 and ground while depressing, and releasing accelerator pedal slowly. (after warming up engine)
   [Refer to "Preparation", "TCM SELF-DIAGNOSTIC PROCEDURE (No Tools)", AT-46.]

Accelerator pedal condition	Voltage	
	Terminal No. 16	Terminal No. 17
Released	Battery voltage	1V or less
Fully depressed	1V or less	Battery voltage

MTBL0206

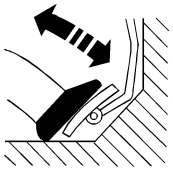

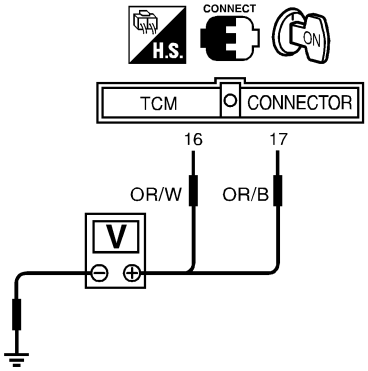

SAT526J

OK or NG

OK	▶	GO TO 5.
NG	▶	**Check the following items:** ● Throttle position switch Refer to "Component Inspection", AT-183. ● Harness for short or open between ignition switch and throttle position switch (Main harness) ● Harness for short or open between throttle position switch and TCM (Main harness)

5	CHECK DTC

Perform Diagnostic Trouble Code (DTC) confirmation procedure, AT-176.

OK or NG

OK	▶	**INSPECTION END**
NG	▶	1. Perform TCM input/output signal inspection. 2. If NG, recheck TCM pin terminals for damage or loose connection with harness connector.

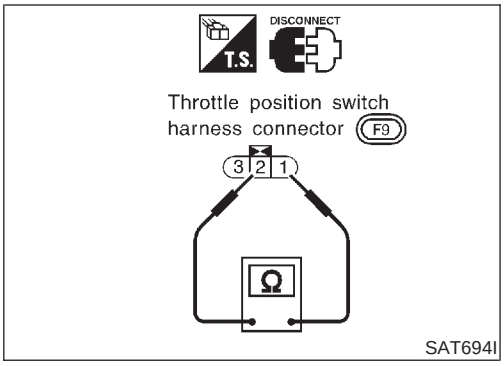

Component Inspection

NBAT0205

THROTTLE POSITION SWITCH

NBAT0205S01

Closed Throttle Position Switch (Idle position)

NBAT0205S0101

- Check continuity between terminals 1 and 2.
  [Refer to “Preparation”, “TCM SELF-DIAGNOSTIC PROCEDURE (No Tools)”, AT-46.]

Accelerator pedal condition	Continuity
Released	Yes
Depressed	No

- To adjust closed throttle position switch, refer to EC-99, “Basic Inspection”.

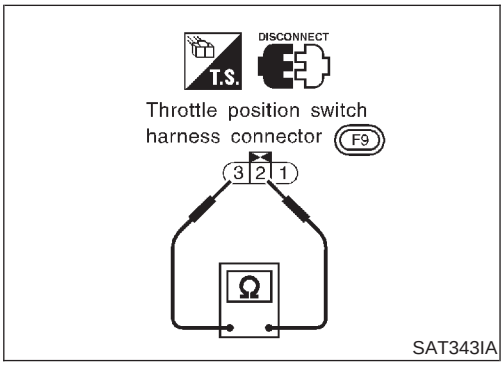

Wide Open Throttle Position Switch

NBAT0205S0102

- Check continuity between terminals 2 and 3.

Accelerator pedal condition	Continuity
Released	No
Depressed	Yes

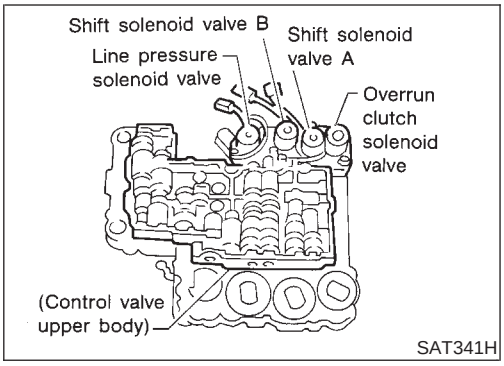

Description

NBAT0068

The overrun clutch solenoid valve is activated by the TCM in response to signals sent from the inhibitor switch, overdrive control switch, vehicle speed and throttle position sensors. The overrun clutch operation will then be controlled.

TCM TERMINALS AND REFERENCE VALUE

NBAT0068S02

Remarks: Specification data are reference values.

Terminal No.	Wire color	Item	Condition		Judgement standard
20	L/B	Overrun clutch solenoid valve		When overrun clutch solenoid valve operates.	Battery voltage
				When overrun clutch solenoid valve does not operate.	1V or less

ON BOARD DIAGNOSIS LOGIC

NBAT0068S03

Diagnostic trouble code	Malfunction is detected when ...	Check item (Possible cause)
: O/R CLTCH SOL/CIRC	TCM detects an improper voltage drop when it tries to operate the solenoid valve.	• Harness or connectors (The solenoid circuit is open or shorted.) • Overrun clutch solenoid valve
: P1760		

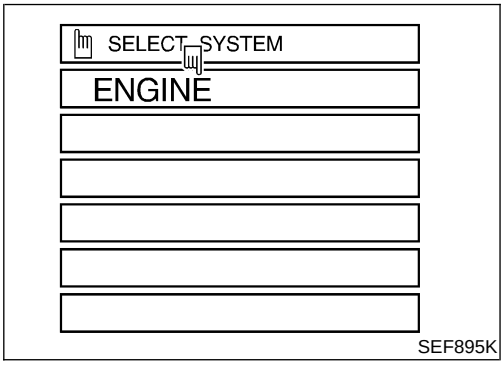

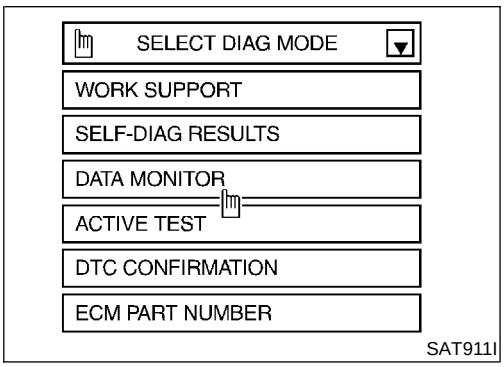

DIAGNOSTIC TROUBLE CODE (DTC) CONFIRMATION PROCEDURE

NBAT0068S01

CAUTION:

Always drive vehicle at a safe speed.

NOTE:

If "DIAGNOSTIC TROUBLE CODE CONFIRMATION PROCEDURE" has been previously conducted, always turn ignition switch "OFF" and wait at least 5 seconds before conducting the next test.

TESTING CONDITION:

Always drive vehicle on a level road to improve accuracy of test.

After the repair, perform the following procedure to confirm the malfunction is eliminated.

With CONSULT

1) Turn ignition switch "ON" and select "DATA MONITOR" mode for "ENGINE" with CONSULT.
2) Start engine.
3) Accelerate vehicle to a speed of more than 10 km/h (6MPH) in "D" position (OD "ON").
4) Release accelerator pedal completely in "D" position (OD "OFF").

With GST

Follow the procedure "With CONSULT".

Wiring Diagram — AT — OVRCSV

NBAT0200

AT-OVRCSV-01

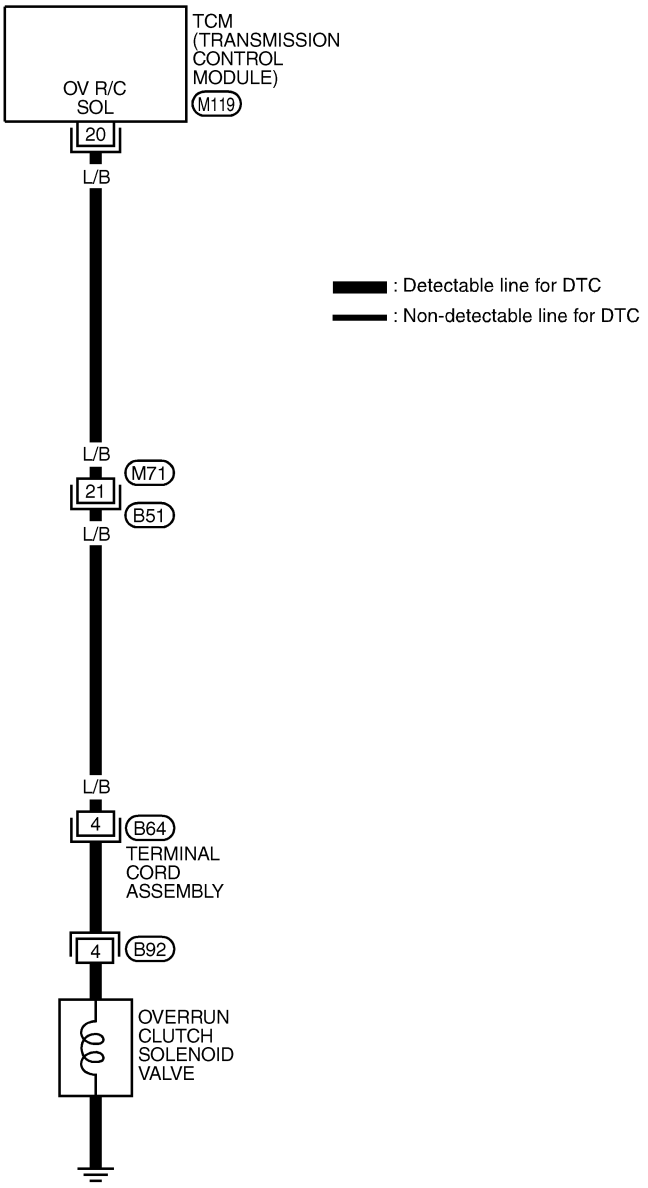

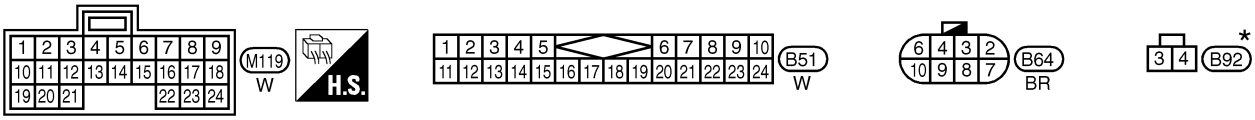

★ : This connector is not shown in "HARNESS LAYOUT" in EL section.

MAT741A

Diagnostic Procedure

NBAT0069

1	CHECK GROUND CIRCUIT	
1. Turn ignition switch to “OFF” position. 2. Disconnect terminal cord assembly connector on the right side of transfer assembly. 3. Check resistance between terminal 4 and ground. 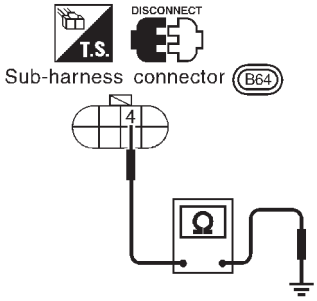 SAT170J **Is resistance approx. 20 - 40Ω?**		
Yes	▶	GO TO 2.
No	▶	1. Remove control valve assembly. Refer to AT-259. 2. Check the following items: ● Overrun clutch solenoid valve Refer to “Component Inspection”, AT-188. ● Harness of terminal cord assembly for short or open

2	CHECK POWER SOURCE CIRCUIT	
1. Turn ignition switch to “OFF” position. 2. Disconnect TCM harness connector. 3. Check resistance between terminal 4 and TCM harness connector terminal 20. 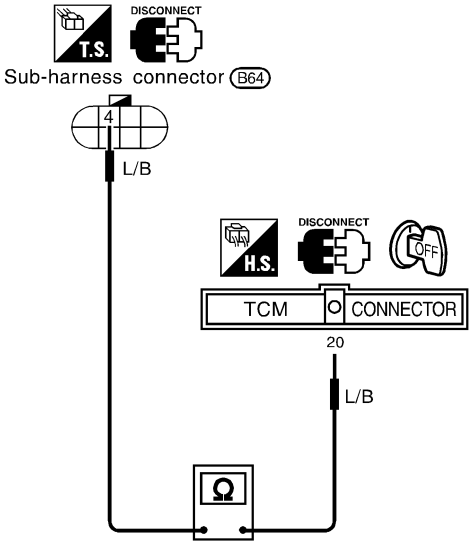 SAT527J If OK, check harness for short to ground and short to power. **Is resistance approx 0Ω?**		
Yes	▶	GO TO 3.
No	▶	Repair open circuit or short to ground or short to power in harness or connectors.

3	CHECK DTC	
Perform Diagnostic Trouble Code (DTC) confirmation procedure, AT-184.		
OK or NG		
OK	▶	**INSPECTION END**
NG	▶	1. Perform TCM input/output signal inspection. 2. If NG, recheck TCM pin terminals for damage or loose connection with harness connector.

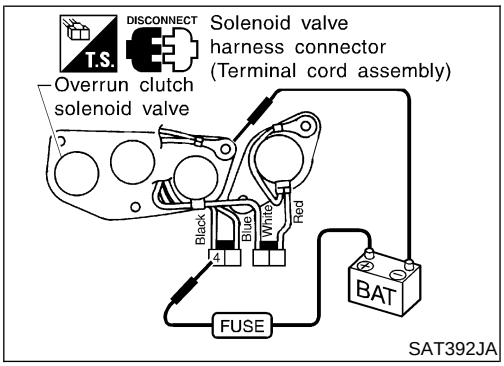

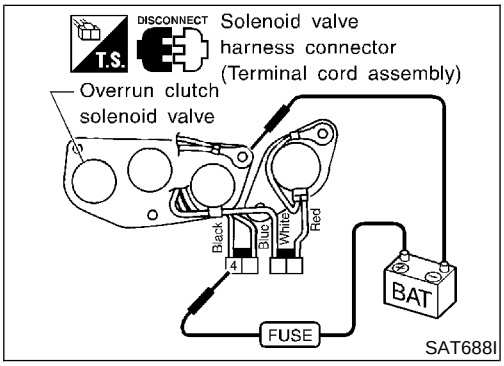

Component Inspection

NBAT0070

OVERRUN CLUTCH SOLENOID VALVE

NBAT0070S01

- For removal, refer to AT-259.

Resistance Check

NBAT0070S0101

- Check resistance between terminal 4 and ground.

Solenoid valve	Terminal No.		Resistance (Approx.)
Overrun clutch solenoid valve	4	Ground	20 - 40Ω

Operation Check

NBAT0070S0102

- Check solenoid valve by listening for its operating sound while applying battery voltage to the terminal 4 and ground.

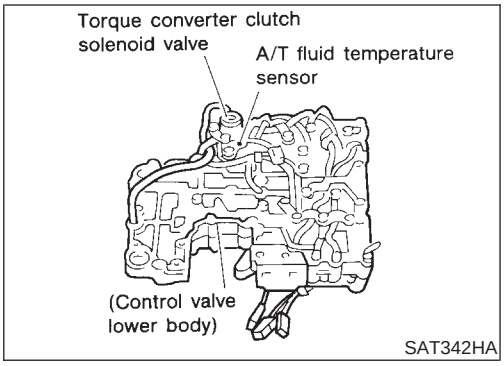

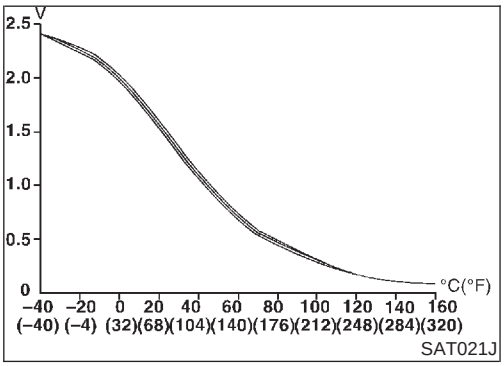

Description

NBAT0172

The A/T fluid temperature sensor detects the A/T fluid temperature and sends a signal to the TCM.

CONSULT REFERENCE VALUE IN DATA MONITOR MODE

NBAT0172S02

Remarks: Specification data are reference values.

Monitor item	Condition	Specification
A/T fluid temperature sensor	Cold [20°C (68°F)] ↓ Hot [80°C (176°F)]	Approximately 1.5V ↓ Approximately 0.5V

TCM TERMINALS AND REFERENCE VALUE

NBAT0172S03

Remarks: Specification data are reference values.

Terminal No.	Wire color	Item	Condition		Judgement standard
10	W/R	Power source	ON	When turning ignition switch to “ON”.	Battery voltage
				When turning ignition switch to “OFF”.	1V or less
19	W/R	Power source		Same as No. 10	
28	R/Y	Power source (Memory back-up)	ON or OFF	When turning ignition switch to “OFF”.	Battery voltage
				When turning ignition switch to “ON”.	Battery voltage
42	B	Throttle position sensor (Ground)	ON	—	—
47	R	A/T fluid temperature sensor		When ATF temperature is 20°C (68°F).	Approximately 1.5V
				When ATF temperature is 80°C (176°F).	Approximately 0.5V

Description (Cont'd)

ON BOARD DIAGNOSIS LOGIC

NBAT0172S04

Diagnostic trouble code	Malfunction is detected when ...	Check item (Possible cause)
: BATT/FLUID TEMP SEN	TCM receives an excessively low or high voltage from the sensor.	• Harness or connectors (The sensor circuit is open or shorted.) • A/T fluid temperature sensor
: 8th judgement flicker		

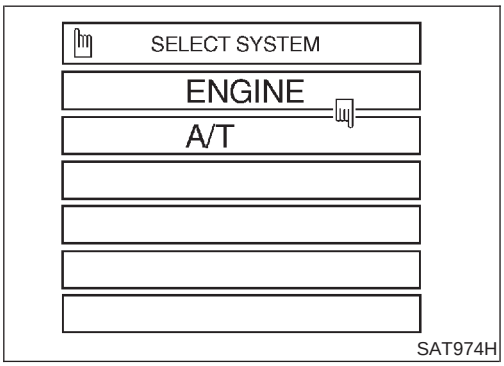

SAT974H

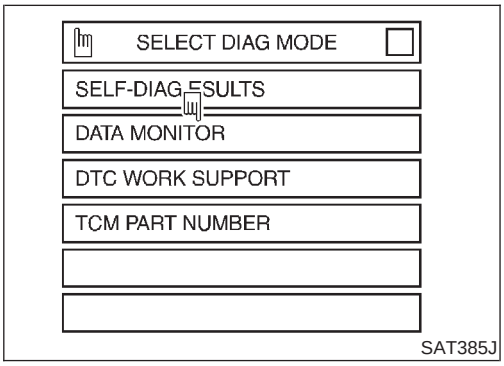

SAT385J

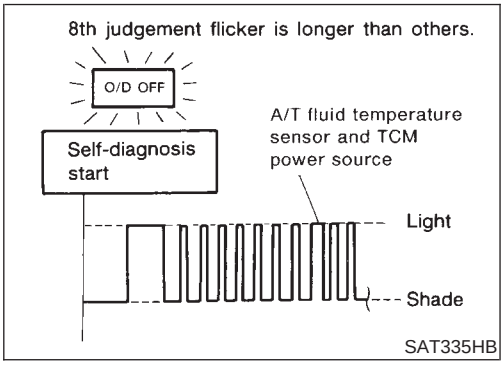

SAT335HB

DIAGNOSTIC TROUBLE CODE (DTC) CONFIRMATION PROCEDURE

NBAT0172S01

After the repair, perform the following procedure to confirm the malfunction is eliminated.

With CONSULT

1) Start engine.
2) Select "DATA MONITOR" mode for "A/T" with CONSULT.
3) Drive vehicle under the following conditions:
   Selector lever in "D" position, vehicle speed higher than 20 km/h (12 MPH).

No Tools

1) Start engine.
2) Drive vehicle under the following conditions:
   Selector lever in "D" position, vehicle speed higher than 20 km/h (12 MPH).
3) Perform self-diagnosis.
   Refer to TCM SELF-DIAGNOSTIC PROCEDURE (No Tools), AT-46.

Wiring Diagram — AT — BA/FTS

NBAT0201

AT-BA/FTS-01

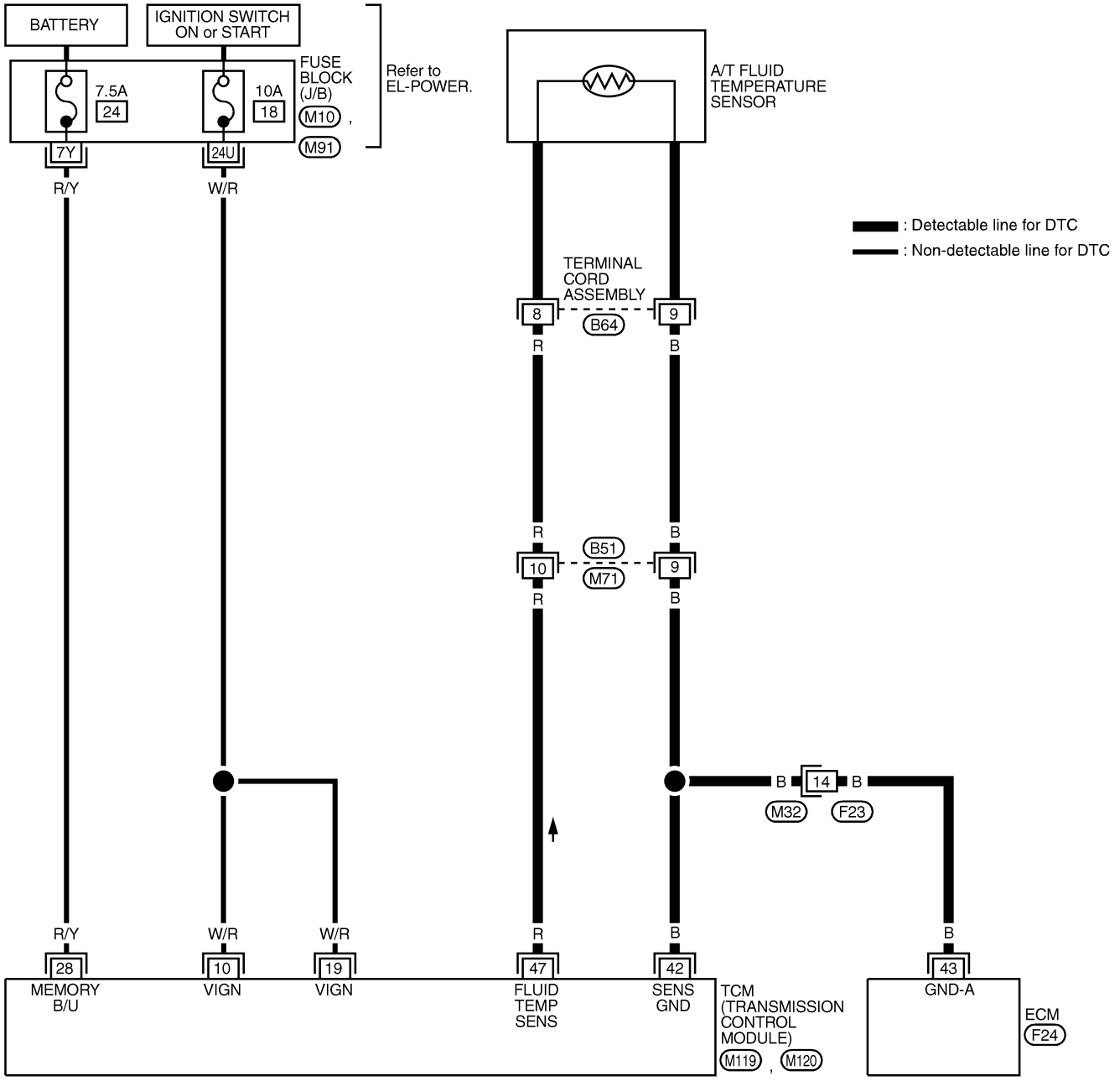

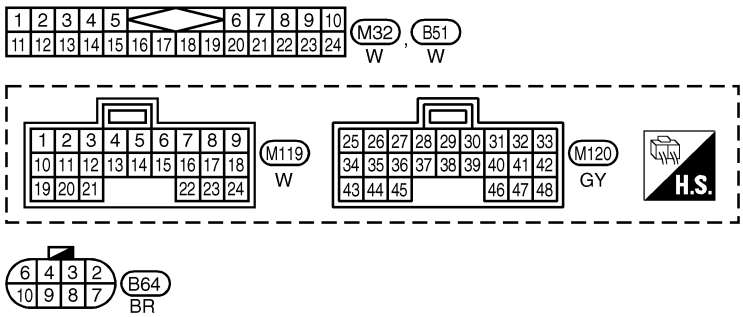

Refer to last page (Foldout page).

M10

M91

F24

MAT955A

Diagnostic Procedure

NBAT0173

1	CHECK TCM POWER SOURCE

1. Turn ignition switch to “ON” position.
   (Do not start engine.)
2. Check voltage between TCM terminals 10, 19, 28 and ground.
   Voltage: Battery voltage

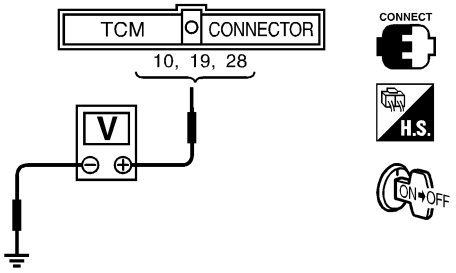

SAT514J

3. Turn ignition switch to “OFF” position.
4. Check voltage between TCM terminal 42 and ground.
   Voltage: Battery voltage

OK or NG

OK	▶	GO TO 2.
NG	▶	**Check the following items:** ● Harness for short or open between ignition switch and TCM terminals 10, 19 and 28 (Main harness) ● Ignition switch and fuse Refer to EL-9, “Schematic”.

2	CHECK A/T FLUID TEMPERATURE SENSOR WITH TERMINAL CORD ASSEMBLY

1. Turn ignition switch to “OFF” position.
2. Disconnect terminal cord assembly connector on the right side of transfer assembly.
3. Check resistance between terminals 8 and 9 when A/T is cold [20°C (68°F)].

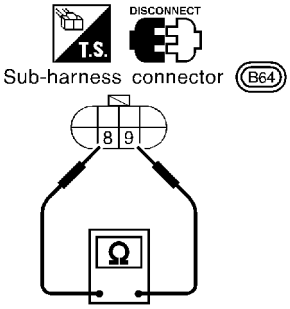

SAT697I

Is resistance approx. 2.5kΩ?

Yes	▶	GO TO 3.
No	▶	1. Remove oil pan. 2. Check the following items: ● A/T fluid temperature sensor Refer to “Component Inspection”, AT-194. ● Harness of terminal cord assembly for short or open

3	CHECK INPUT SIGNAL OF A/T FLUID TEMPERATURE SENSOR

With CONSULT

1. Start engine.
2. Select "ECU INPUT SIGNALS" in "DATA MONITOR" mode for "A/T" with CONSULT.
3. Read out the value of "FLUID TEMP SE".

Voltage:

Cold [20°C (68°F)] → Hot [80°C (176°F)]:

Approximately 1.5V → 0.5V

DATA MONITOR	
MONITORING	
VHCL/S SE-A/T	XXX km/h
VHCL/S SE-MTR	XXX km/h
THRTL POS SEN	XXX V
FLUID TEMP SE	XXX V
BATTERY VOLT	XXX V

SAT738J

Without CONSULT

1. Start engine.
2. Check voltage between TCM terminal 47 and ground while warming up A/T.

Voltage:

Cold [20°C (68°F)] → Hot [80°C (176°F)]:

Approximately 1.5V → 0.5V

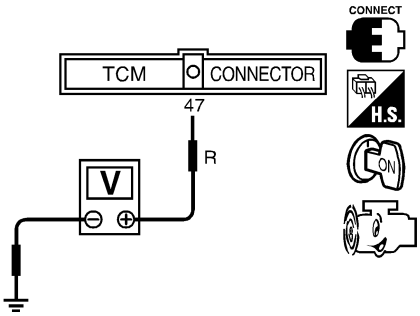

SAT518J

OK or NG

OK	▶	GO TO 4.
NG	▶	**Check the following item:** ● Harness for short or open between TCM and terminal cord assembly (Main harness)

4	CHECK DTC

Perform Diagnostic Trouble Code (DTC) confirmation Procedure, AT-190.

OK or NG

OK	▶	**INSPECTION END**
NG	▶	● Perform TCM input/output signal inspection. ● If NG, recheck TCM pin terminals for damage or loose connection with harness connector.

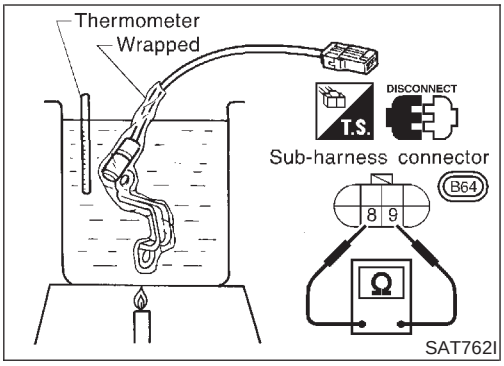

Component Inspection

NBAT0174

A/T FLUID TEMPERATURE SENSOR

NBAT0174S01

- For removal, refer to AT-259.
- Check resistance between terminals 8 and 9 while changing temperature as shown at left.

Temperature °C (°F)	Resistance
20 (68)	Approximately 2.5 kΩ
80 (176)	Approximately 0.3 kΩ

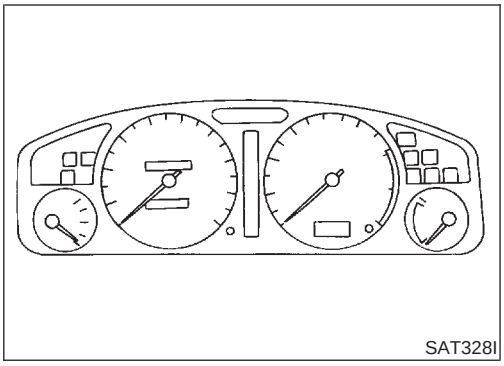
SAT328I

Description

NBAT0071

The vehicle speed sensor·MTR is built into the speedometer assembly. The sensor functions as an auxiliary device to the revolution sensor when it is malfunctioning. The TCM will then use a signal sent from the vehicle speed sensor·MTR.

TCM TERMINALS AND REFERENCE VALUE

NBAT0071S02

Remarks: Specification data are reference values.

Terminal No.	Wire color	Item	Condition		Judgement standard
40	W/L	Vehicle speed sensor		When moving vehicle at 2 to 3 km/h (1 to 2 MPH) for 1 m (3 ft) or more.	Voltage varies between less than 1V and more than 4.5V

ON BOARD DIAGNOSIS LOGIC

NBAT0071S03

Diagnostic trouble code	Malfunction is detected when ...	Check item (Possible cause)
: VHCL SPEED SEN·MTR	TCM does not receive the proper voltage signal from the sensor.	• Harness or connectors (The sensor circuit is open or shorted.) • Vehicle speed sensor
: 2nd judgement flicker		

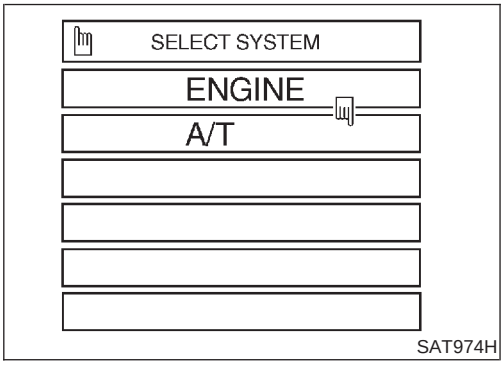

SAT974H

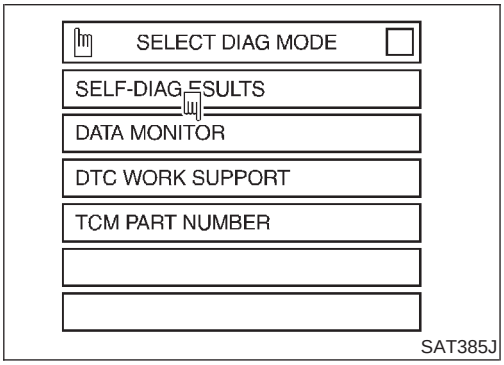

SAT385J

DIAGNOSTIC TROUBLE CODE (DTC) CONFIRMATION PROCEDURE

NBAT0071S01

CAUTION:

- **Always drive vehicle at a safe speed.**
- **If conducting this "DTC CONFIRMATION PROCEDURE" again, always turn ignition switch "OFF" and wait at least 5 seconds before continuing.**

After the repair, perform the following procedure to confirm the malfunction is eliminated.

With CONSULT

1) Turn ignition switch "ON" and select "DATA MONITOR" mode for "A/T" with CONSULT.
2) Start engine and accelerate vehicle from 0 to 25 km/h (0 to 6 MPH).

Description (Cont'd)

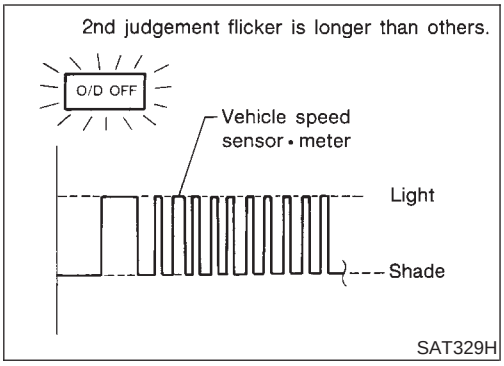

No Tools

1) Start engine.
2) Drive vehicle under the following conditions:
   Selector lever in "D" position and vehicle speed higher than 25 km/h (16 MPH).
3) Perform self-diagnosis.
   Refer to TCM SELF-DIAGNOSTIC PROCEDURE (No Tools), AT-46.

Wiring Diagram — AT — VSSMTR

NBAT0202

AT-VSSMTR-01

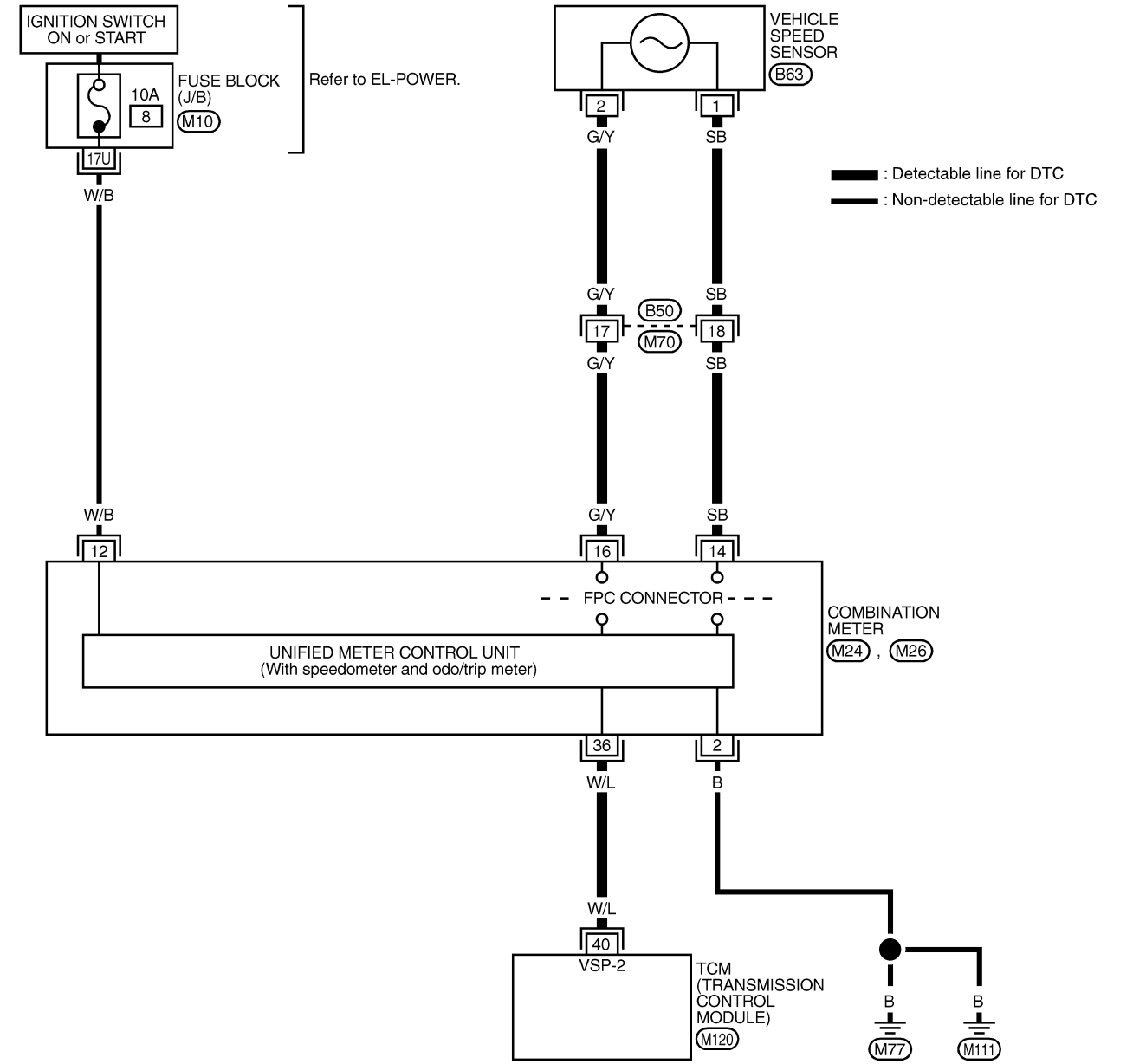

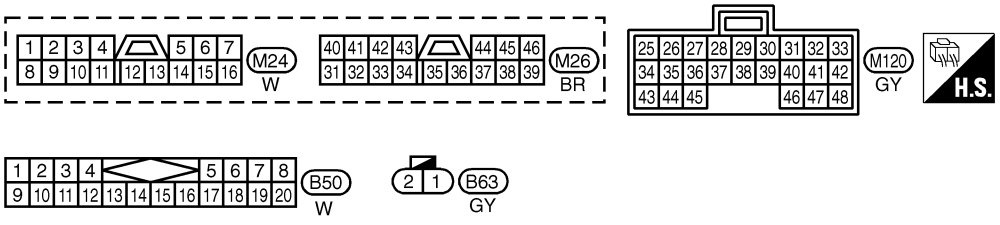

Refer to last page (Foldout page).
M10

MAT743A

Diagnostic Procedure

NBAT0072

1	CHECK INPUT SIGNAL.

With CONSULT
1. Start engine.
2. Select “ECU INPUT SIGNALS” in “DATA MONITOR” mode for “A/T” with CONSULT.
3. Read out the value of “VHCL/S SE·MTR” while driving.
   Check the value changes according to driving speed.

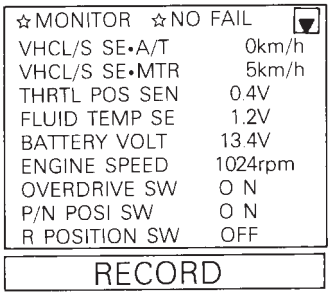

SAT076H

Without CONSULT
1. Start engine.
2. Check voltage between TCM terminal 40 and ground while driving at 2 to 3 km/h (1 to 2 MPH) for 1 m (3 ft) or more.

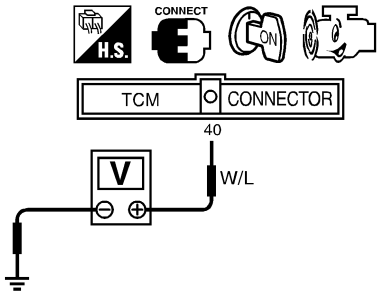

SAT528J

Does battery voltage vary between less than 1V and more than 4.5V?

Yes	▶	GO TO 2.
No	▶	**Check the following items:** ● Vehicle speed sensor and ground circuit for vehicle speed sensor Refer to EL-80, “Components Parts and Harness Connector Location”. ● Harness for short or open between TCM and vehicle speed sensor (Main harness)

2	CHECK DTC

Perform Diagnostic Trouble Code (DTC) confirmation procedure, AT-195.

OK or NG

OK	▶	**INSPECTION END**
NG	▶	1. Perform TCM input/output signal inspection. 2. If NG, recheck TCM pin terminals for damage or loose connection with harness connector.

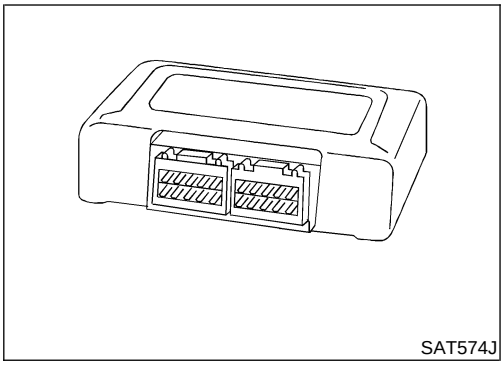

Description

NBAT0207

The TCM consists of a microcomputer and connectors for signal input and output and for power supply. The unit controls the A/T.

ON BOARD DIAGNOSIS LOGIC

NBAT0207S01

Diagnostic trouble code	Malfunction is detected when ...	Check item (Possible cause)
: CONTROL UNIT (RAM) : CONTROL UNIT (ROM)	TCM memory (RAM) or (ROM) is malfunctioning.	TCM

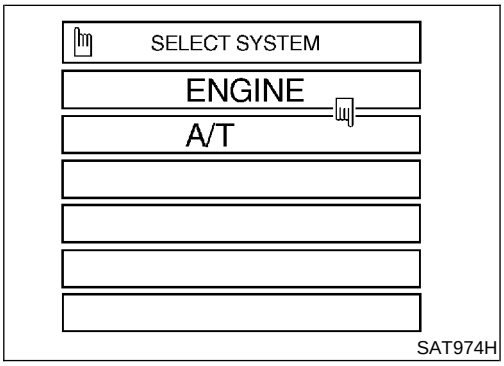

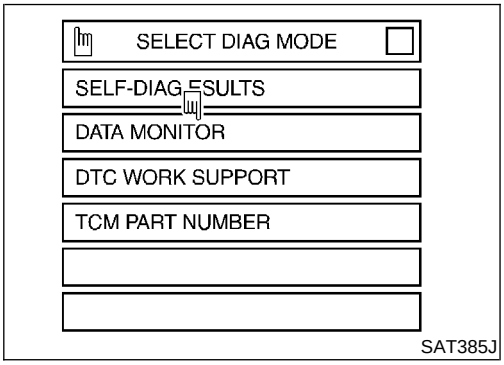

DIAGNOSTIC TROUBLE CODE (DTC) CONFIRMATION PROCEDURE

NBAT0207S02

NOTE:

If "DIAGNOSTIC TROUBLE CODE CONFIRMATION PROCEDURE" has been previously conducted, always turn ignition switch "OFF" and wait at least 5 seconds before conducting the next test.

With CONSULT

1) Turn ignition switch "ON" and select "DATA MONITOR" mode for A/T with CONSULT.
2) Start engine.
3) Run engine for at least 2 seconds at idle speed.

Diagnostic Procedure

=NBAT0208

1	CHECK DTC	
With CONSULT 1. Turn ignition switch “ON” and select “SELF DIAG RESULTS” mode for A/T with CONSULT. 2. Touch “ERASE”. PERFORM DIAGNOSTIC TROUBLE CODE (DTC) CONFIRMATION PROCEDURE. See previous page. **Is the “CONTROL UNIT (RAM) or CONTROL UNIT (ROM)” displayed again?**		
Yes	▶	Replace TCM.
No	▶	**INSPECTION END**

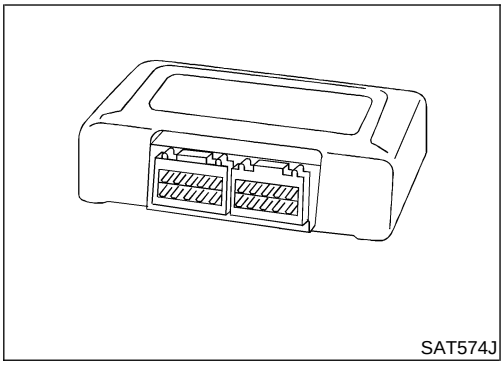
SAT574J

Description

NBAT0210

The TCM consists of a microcomputer and connectors for signal input and output and for power supply. The unit controls the A/T.

ON BOARD DIAGNOSIS LOGIC

NBAT0210S01

Diagnostic trouble code	Malfunction is detected when ...	Check item (Possible cause)
: CONT UNIT (EEP ROM)	TCM memory (EEP ROM) is malfunctioning.	TCM

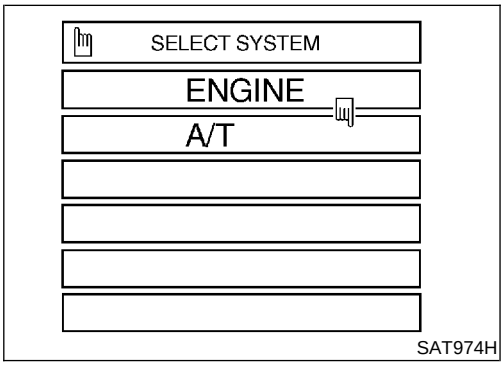

SAT974H

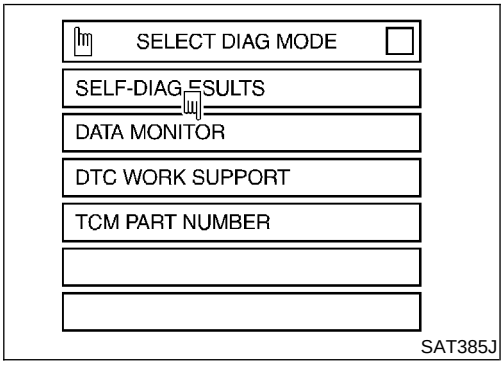

SAT385J

DIAGNOSTIC TROUBLE CODE (DTC) CONFIRMATION PROCEDURE

NBAT0210S02

NOTE:

If "DIAGNOSTIC TROUBLE CODE CONFIRMATION PROCEDURE" has been previously conducted, always turn ignition switch "OFF" and wait at least 5 seconds before conducting the next test.

With CONSULT

1) Turn ignition switch "ON" and select "DATA MONITOR" mode for A/T with CONSULT.
2) Start engine.
3) Run engine for at least 2 seconds at idle speed.

Diagnostic Procedure

=NBAT0211

1	CHECK DTC	
With CONSULT 1. Turn ignition switch “ON” and select “SELF DIAG RESULTS” mode for A/T with CONSULT. 2. Move selector lever to “R” position. 3. Depress accelerator pedal (Full throttle position). 4. Touch “ERASE”. 5. Turn ignition switch “OFF” position for 10 seconds. PERFORM DIAGNOSTIC TROUBLE CODE (DTC) CONFIRMATION PROCEDURE. See previous page. **Is the “CONTROL UNIT (EEP ROM)” displayed again?**		
Yes	▶	Replace TCM.
No	▶	**INSPECTION END**

Wiring Diagram — AT — NONDTC

NBAT0203

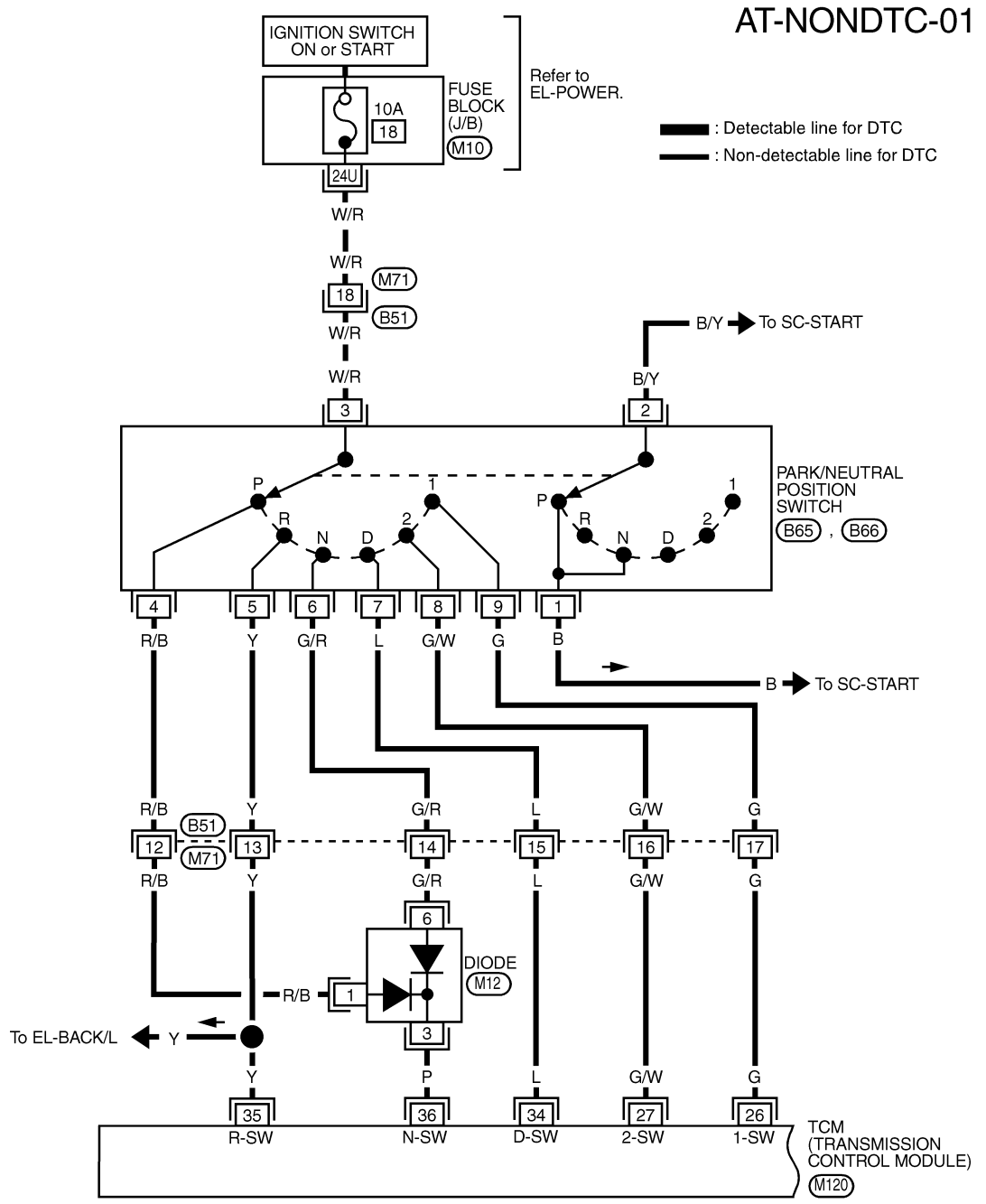

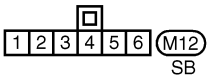

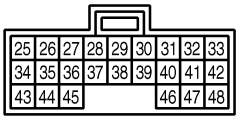

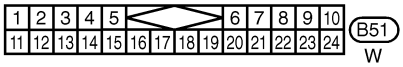

Refer to last page (Foldout page).
M10

MAT744A

AT-NONDTC-02

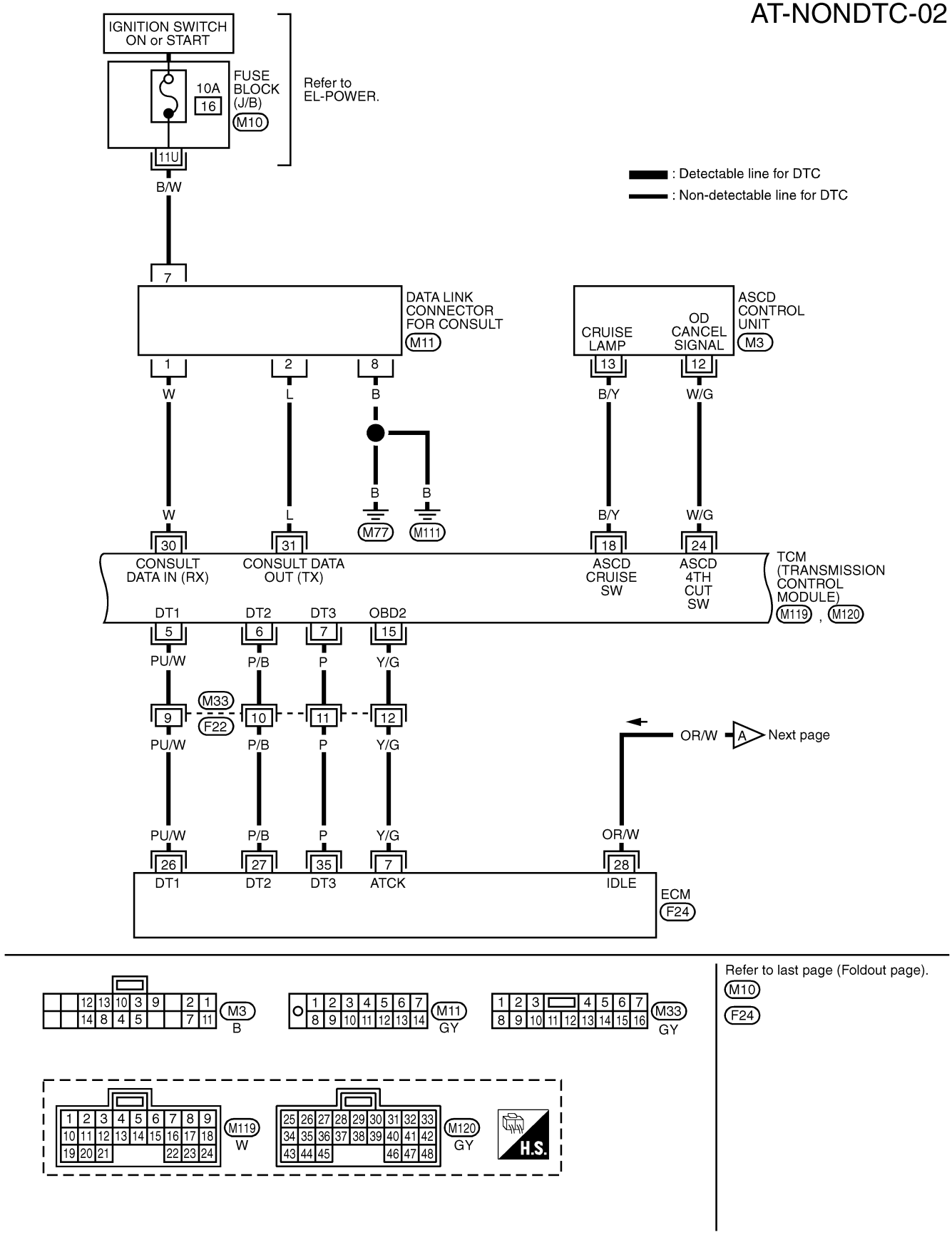

MAT745A

AT-NONDTC-03

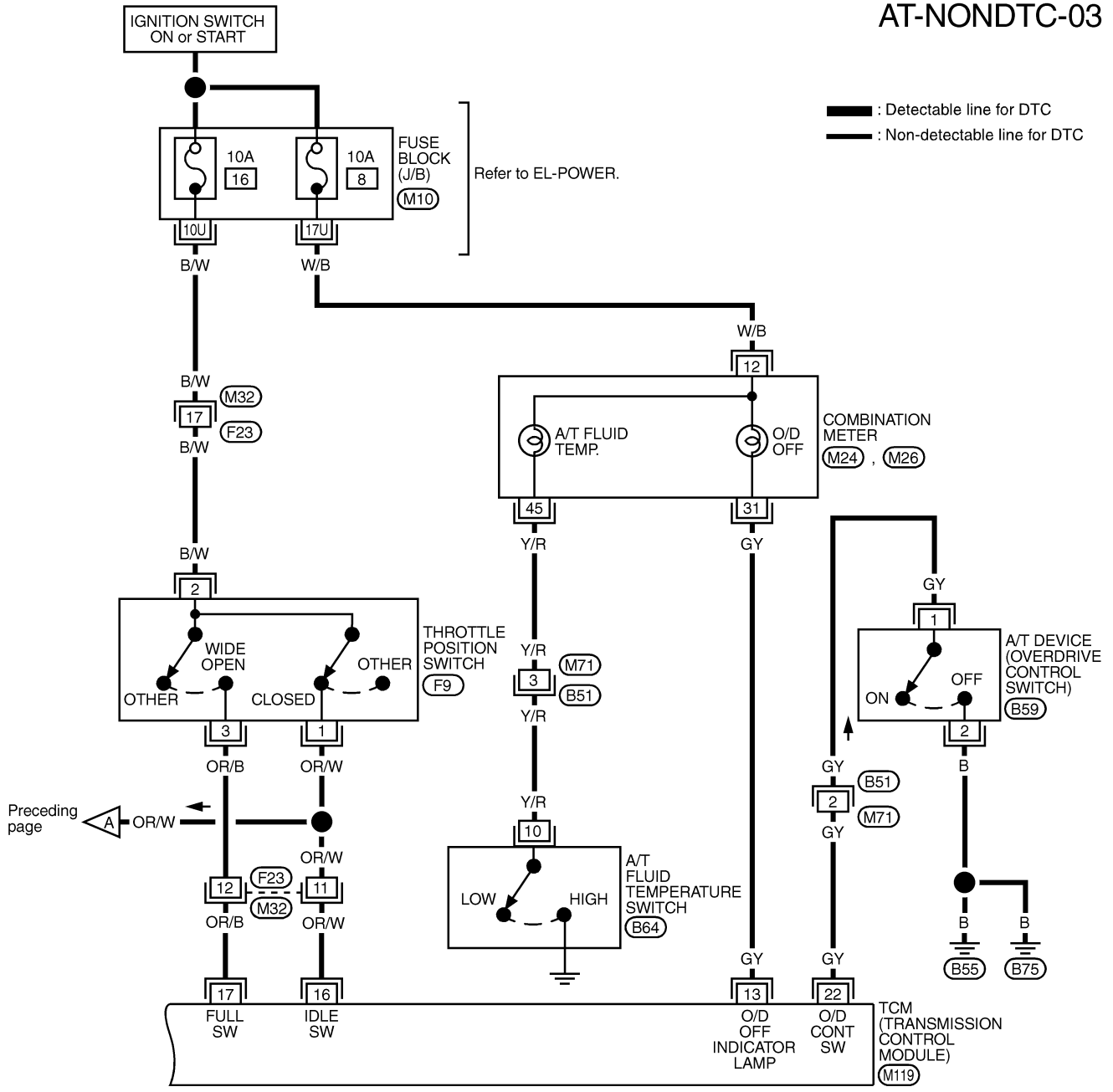

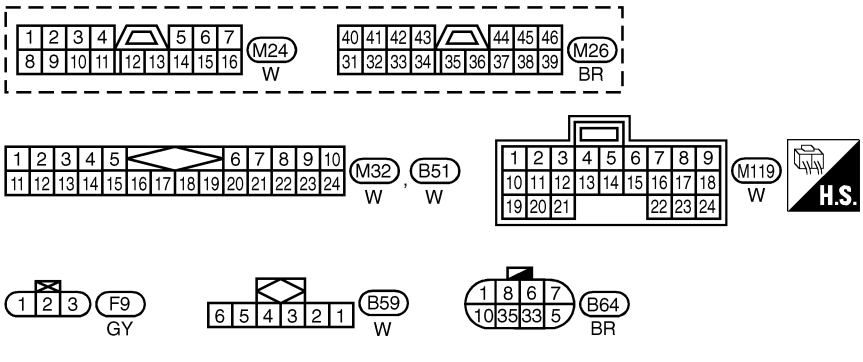

Refer to last page (Foldout page).

M10

MAT746A

AT-NONDTC-04

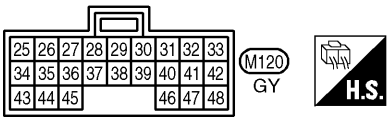

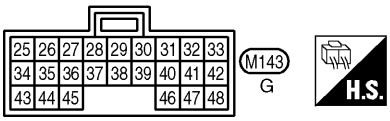

MAT747A

1. O/D OFF Indicator Lamp Does Not Come On

NBAT0073

SYMPTOM:

O/D OFF indicator lamp does not come on for about 2 seconds when turning ignition switch to “ON”.

1	CHECK TCM POWER SOURCE

1. Turn ignition switch to “ON” position.
   (Do not start engine.)
2. Check voltage between TCM terminals 10, 19, 28 and ground.
   Voltage: Battery voltage

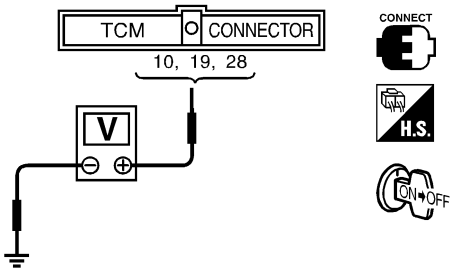

SAT514J

3. Turn ignition switch to “OFF” position.
4. Check voltage between TCM terminal 28 and ground.
   Voltage: Battery voltage

OK or NG

OK	▶	GO TO 2.
NG	▶	**Check the following items:** ● Harness for short or open between ignition switch and TCM terminals 10, 19 and 28 (Main harness) ● Refer to “Wiring Diagram — AT — MAIN”, AT-96. ● Ignition switch and fuse Refer to EL-9, “Schematic”.

2	CHECK TCM GROUND CIRCUIT

1. Turn ignition switch to “OFF” position.
2. Disconnect TCM harness connector.
3. Check resistance between TCM terminals 25, 48 and ground.

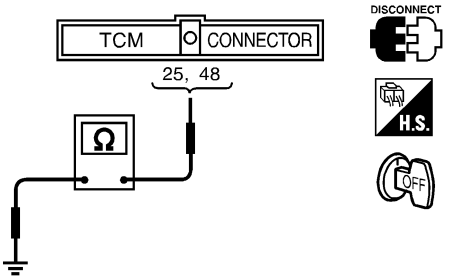

SAT515J

If OK, check harness for short to ground and short to power.

Is resistance approx. 0Ω?

Yes	▶	GO TO 3.
No	▶	● Repair open circuit or short to ground or short to power in harness or connectors. ● Refer to “Wiring Diagram — AT — MAIN”, AT-96.

3	CHECK LAMP CIRCUIT

1. Turn ignition switch to "ON" position.
2. Set overdrive control switch to "ON" position.
3. Check voltage between TCM terminals 13 and ground.

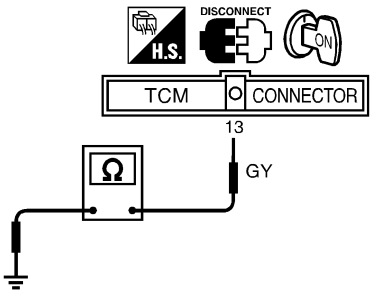

SAT529J

Does battery voltage exist?

Yes	▶	GO TO 4.
No	▶	**Check the following items.** ● Fuse ● O/D OFF indicator lamp Refer to EL-100, "Schematic". ● Harness for short or open between ignition switch and O/D OFF indicator lamp (Main harness) ● Refer to EL-9, "Schematic". ● Harness for short or open between O/D OFF indicator lamp and TCM

4	CHECK SYMPTOM

Check again.

OK or NG

OK	▶	**INSPECTION END**
NG	▶	1. Perform TCM input/output signal inspection. 2. If NG, recheck TCM pin terminals for damage or loose connection with harness connector.

2. Engine Cannot Be Started In “P” and “N” Position

=NBAT0074

SYMPTOM:

Engine cannot be started with selector lever in “P” or “N” position.

Engine cannot be started with selector lever in “P”Engine can be started with selector lever in “D”, “2”, “1” or “R” position.

1	CHECK PNP SWITCH CIRCUIT	
With CONSULT Does “ECU INPUT SIGNALS” in Data Monitor show damage to PNP switch circuit?		
Without CONSULT Does self-diagnosis show damage to PNP switch circuit? 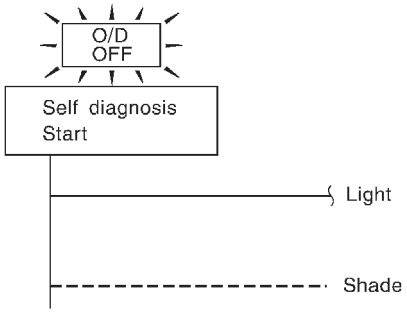 SAT367J		
Yes or No		
Yes	▶	Check PNP switch circuit. Refer to “DTC P0705”, AT-99.
No	▶	GO TO 2.

2	CHECK PNP SWITCH INSPECTION	
Check for short or open of PNP switch 2-pin connector. Refer to “Components Inspection”, AT-104. 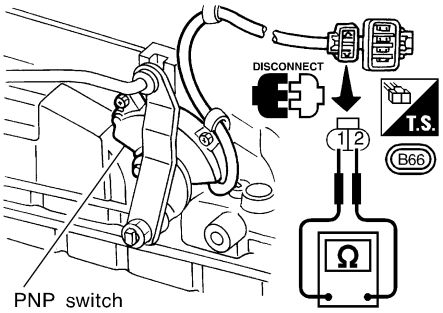 SAT838BB		
OK or NG		
OK	▶	GO TO 3.
NG	▶	Repair or replace PNP switch.

3	CHECK STARTING SYSTEM	
Check starting system. Refer to SC-6, “System Description”.		
OK or NG		
OK	▶	**INSPECTION END**
NG	▶	Repair or replace damaged parts.

3. In “P” Position, Vehicle Moves Forward Or Backward When Pushed

=NBAT0075

SYMPTOM:

Vehicle moves when it is pushed forward or backward with selector lever in “P” position.

1	CHECK PARKING COMPONENTS	
Check parking components. Refer to “Parking Pawl Components”, AT-320. 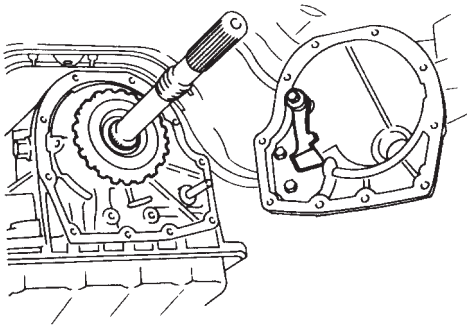 SAT133B		
OK or NG		
OK	▶	**INSPECTION END**
NG	▶	Repair or replace damaged parts.

4. In “N” Position, Vehicle Moves

=NBAT0076

SYMPTOM:

Vehicle moves forward or backward when selecting “N” position.

1	CHECK PNP SWITCH CIRCUIT
With CONSULT Does “ECU INPUT SIGNALS” in Data Monitor show damage to PNP switch circuit?	
Without CONSULT Does self-diagnosis show damage to PNP switch circuit?	

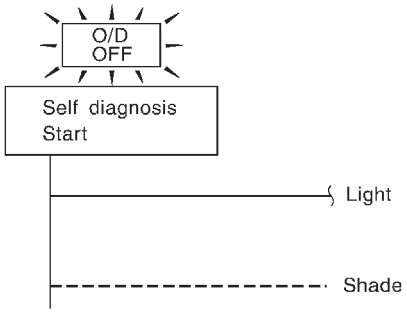

SAT367J

Yes or No

Yes	▶	Check PNP switch circuit. Refer to “DTC P0705”, AT-99.
No	▶	GO TO 2.

2	CHECK CONTROL LINKAGE
Check control linkage. Refer to AT-261.	

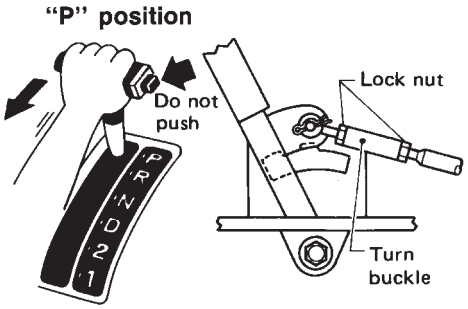

SAT032G

OK or NG

OK	▶	GO TO 3.
NG	▶	Adjust control linkage. Refer to AT-261.

3	CHECK A/T FLUID LEVEL	
Check A/T fluid level again.		
	OK or NG	
OK	▶	GO TO 4.
NG	▶	Refill ATF.

SAT638A

4	CHECK A/T FLUID CONDITION	
1. Remove oil pan. 2. Check A/T fluid condition.		
	OK or NG	
OK	▶	GO TO 5.
NG	▶	1. Disassemble A/T. 2. Check the following items: ● Forward clutch assembly ● Overrun clutch assembly ● Reverse clutch assembly

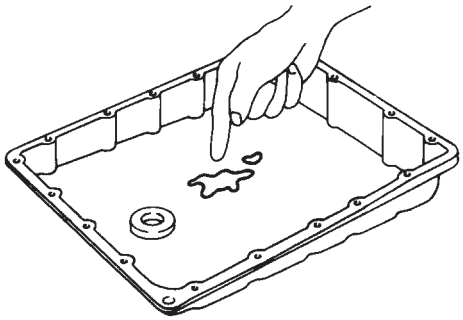

SAT171B

5	CHECK SYMPTOM	
Check again.		
	OK or NG	
OK	▶	**INSPECTION END**
NG	▶	1. Perform TCM input/output signal inspection. 2. If NG, recheck TCM pin terminals for damage or loose connection with harness connector.

5. Large Shock. “N” → “R” Position

=NBAT0077

SYMPTOM:

There is large shock when changing from “N” to “R” position.

1	CHECK SELF-DIAGNOSTIC RESULTS

Does self-diagnosis show damage to A/T fluid temperature sensor, line pressure solenoid valve or throttle position sensor circuit?

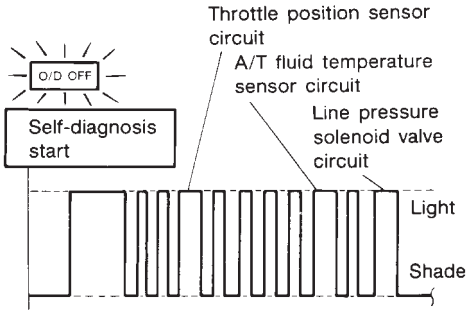

SAT345HA

Yes or No

Yes	▶	Check damaged circuit. Refer to “DTC P0710, DTC P0745 or DTC P1705”, AT-108, 164 or 179.
No	▶	GO TO 2.

2	CHECK THROTTLE POSITION SENSOR

Check throttle position sensor. Refer to EC-181, “Description”.

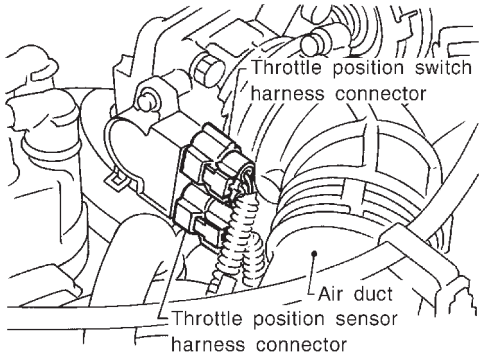

SAT329I

OK or NG

OK	▶	GO TO 3.
NG	▶	Repair or replace throttle position sensor.

3	CHECK LINE PRESSURE
Check line pressure at idle with selector lever in "D" position. Refer to "LINE PRESSURE TEST", AT-62.	

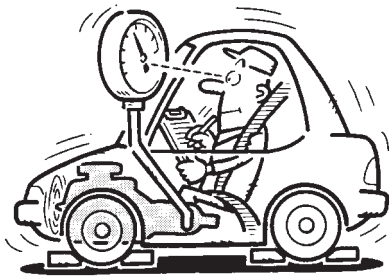

SAT494G

OK or NG

OK	▶	GO TO 4.
NG	▶	1. Remove control valve assembly. Refer to AT-259. 2. Check the following items: ● Valves to control line pressure (Pressure regulator valve, pressure modifier valve, pilot valve and pilot filter) ● Line pressure solenoid valve

4	CHECK SYMPTOM
Check again.	

OK or NG

OK	▶	**INSPECTION END**
NG	▶	1. Perform TCM input/output signal inspection. 2. If NG, recheck TCM pin terminals for damage or loose connection with harness connector.

6. Vehicle Does Not Creep Backward In “R” Position

=NBAT0078

SYMPTOM:

Vehicle does not creep backward when selecting “R” position.

1	CHECK A/T FLUID LEVEL
Check A/T fluid level again.	

SAT638A

OK or NG

OK	▶	GO TO 2.
NG	▶	Refill ATF.

2	CHECK STALL TEST
Check stall revolution with selector lever in “1” and “R” positions. Refer to AT-339.	

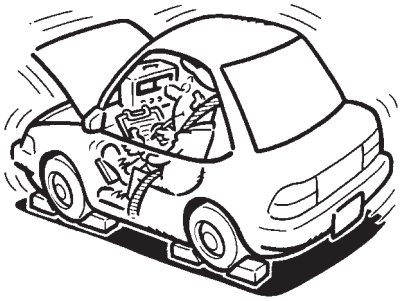

SAT493G

OK or NG

OK	▶	GO TO 3.
OK in “1” position, NG in “R” position	▶	1. Remove control valve assembly. Refer to “ON-VEHICLE SERVICE”, AT-259. 2. Check the following items: ● Valves to control line pressure (Pressure regulator valve, pressure modifier valve, pilot valve and pilot filter) ● Line pressure solenoid valve 3. Disassemble A/T. 4. Check the following items: ● Oil pump assembly ● Torque converter ● Reverse clutch assembly ● High clutch assembly
NG in both “1” and “R” positions	▶	GO TO 6.

3	CHECK LINE PRESSURE

Check line pressure at idle with selector lever in “R” position. Refer to “LINE PRESSURE TEST”, AT-62.

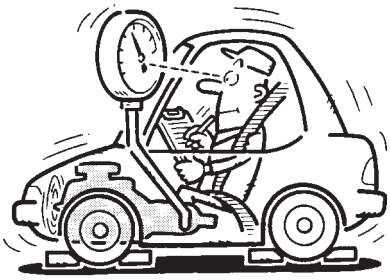

SAT494G

OK or NG

OK	▶	GO TO 4.
NG	▶	1. Remove control valve assembly. Refer to “ON-VEHICLE SERVICE”, AT-259. 2. Check the following items: ● Valves to control line pressure (Pressure regulator valve, pressure modifier valve, pilot valve and pilot filter) ● Line pressure solenoid valve 3. Disassemble A/T. 4. Check the following items: ● Oil pump assembly

4	CHECK A/T FLUID CONDITION

1. Remove oil pan.
2. Check A/T fluid condition.

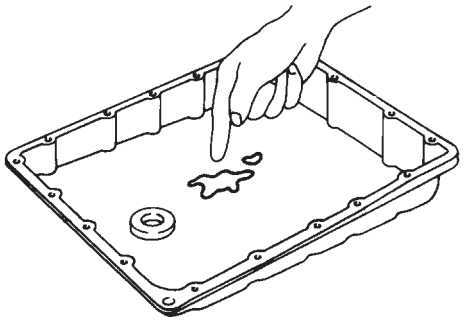

SAT171B

OK or NG

OK	▶	GO TO 5.
NG	▶	GO TO 6.

5	CHECK SYMPTOM

Check again.

OK or NG

OK	▶	**INSPECTION END**
NG	▶	1. Perform TCM input/output signal inspection. 2. If NG, recheck TCM pin terminals for damage or loose connection with harness connector.

6	DETECT MALFUNCTIONING ITEM
1. Remove control valve assembly. Refer to “ON-VEHICLE SERVICE”, AT-259. 2. Check the following items: ● Valves to control line pressure (Pressure regulator valve, pressure modifier valve, pilot valve and pilot filter) ● Line pressure solenoid valve 3. Disassemble A/T. 4. Check the following items: ● Oil pump assembly ● Torque converter ● Reverse clutch assembly ● High clutch assembly ● Low & reverse brake assembly ● Low one-way clutch	
▶	Repair or replace damaged parts.

7. Vehicle Does Not Creep Forward In “D”, “2” Or “1” Position

=NBAT0079

SYMPTOM:

Vehicle does not creep forward when selecting “D”, “2” or “1” position.

1	CHECK A/T FLUID LEVEL	
Check A/T fluid level again.		
	OK or NG	
OK	▶	GO TO 2.
NG	▶	Refill ATF.

SAT638A

2	CHECK STALL TEST	
Check stall revolution with selector lever in “D” position. Refer to “STALL TEST”, AT-59.		
	OK or NG	
OK	▶	GO TO 3.
NG	▶	GO TO 6.

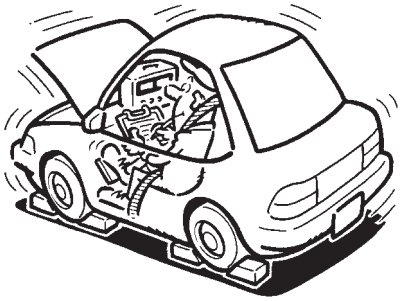

SAT493G

3	CHECK LINE PRESSURE
Check line pressure at idle with selector lever in “R” position. Refer to “LINE PRESSURE TEST”, AT-62. 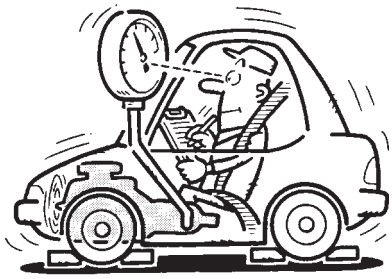 SAT494G	
OK or NG	
OK ▶	GO TO 4.
NG ▶	1. Remove control valve assembly. Refer to AT-259. 2. Check the following items: ● Valves to control line pressure (Pressure regulator valve, pressure modifier valve, pilot valve and pilot filter) ● Line pressure solenoid valve 3. Disassemble A/T. 4. Check the following items: ● Oil pump assembly

4	CHECK A/T FLUID CONDITION
1. Remove oil pan. 2. Check A/T fluid condition. 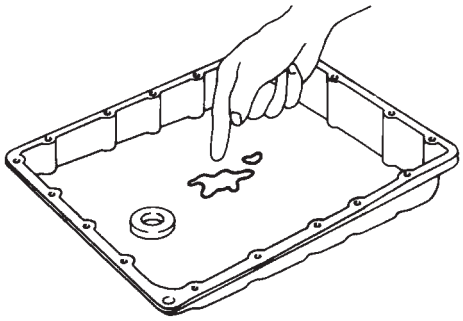 SAT171B	
OK or NG	
OK ▶	GO TO 5.
NG ▶	GO TO 6.

5	CHECK SYMPTOM
Check again.	
OK or NG	
OK ▶	**INSPECTION END**
NG ▶	1. Perform TCM input/output signal inspection. 2. If NG, recheck TCM pin terminals for damage or loose connection with harness connector.

6	DETECT MALFUNCTIONING ITEM
1. Remove control valve assembly. Refer to “ON-VEHICLE SERVICE”, AT-259. 2. Check the following items: ● Valves to control line pressure (Pressure regulator valve, pressure modifier valve, pilot valve and pilot filter) ● Line pressure solenoid valve 3. Disassemble A/T. 4. Check the following items: ● Oil pump assembly ● Forward clutch assembly ● Forward one-way clutch ● Low one-way clutch ● Low & reverse brake assembly ● Torque converter	
▶	Repair or replace damaged parts.

8. Vehicle Cannot Be Started From D_1

=NBAT0080

SYMPTOM:

Vehicle cannot be started from D_1on Cruise test — Part 1.

1	CHECK SYMPTOM	
Is “6. Vehicle Does Not Creep Backward In “R” Position” OK?		
Yes or No		
Yes	▶	GO TO 2.
No	▶	Go to “6. Vehicle Does Not Creep Backward In “R” Position”, AT-215.

2	CHECK SELF-DIAGNOSTIC RESULTS	
Does self-diagnosis show damage to vehicle speed sensor·A/T (revolution sensor), shift solenoid valve A, B or vehicle speed sensor·MTR after cruise test?		
Yes or No		
Yes	▶	Check damaged circuit. Refer to “DTC P0720, DTC P0750, DTC P0755 or VEHICLE SPEED SENSOR. MTR”, AT-113, 169, 173 or 198.
No	▶	GO TO 3.

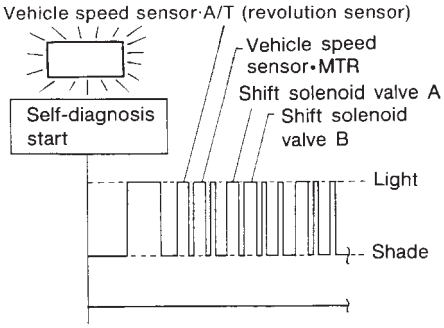

SAT934FB

3	CHECK THROTTLE POSITION SENSOR	
Check throttle position sensor. Refer to EC-181, “Description”.		
OK or NG		
OK	▶	GO TO 4.
NG	▶	Repair or replace throttle position sensor.

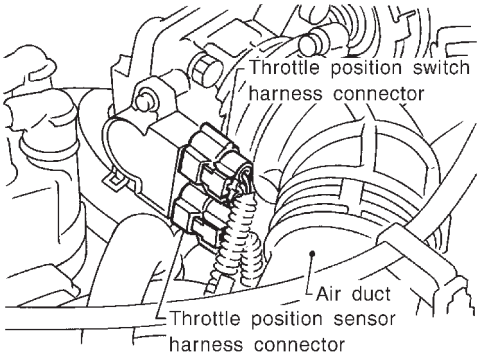

SAT329I

4	CHECK LINE PRESSURE

Check line pressure at stall point with selector lever in "D" position.
Refer to "LINE PRESSURE TEST", AT-62.

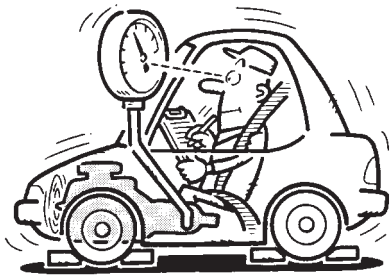

SAT494G

OK or NG

OK	▶	GO TO 5.
NG	▶	GO TO 8.

5	CHECK A/T FLUID CONDITION

1. Remove oil pan.
2. Check A/T fluid condition.

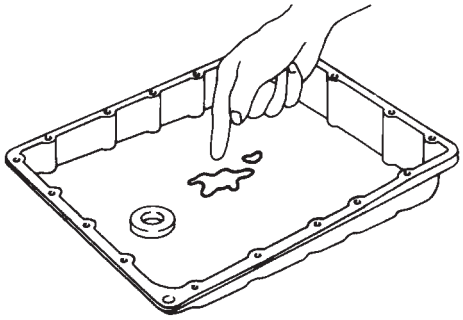

SAT171B

OK or NG

OK	▶	GO TO 6.
NG	▶	GO TO 8.

6	DETECT MALFUNCTIONING ITEM

1. Remove control valve assembly.
   Refer to AT-259.
2. Check the following items:

- Shift valve A
- Shift valve B
- Shift solenoid valve A
- Shift solenoid valve B
- Pilot valve
- Pilot filter

OK or NG

OK	▶	GO TO 7.
NG	▶	Repair or replace damaged parts.

7	CHECK SYMPTOM	
Check again.		
	OK or NG	
OK	▶	**INSPECTION END**
NG	▶	1. Perform TCM input/output signal inspection. 2. If NG, recheck TCM pin terminals for damage or loose connection with harness connector.

8	DETECT MALFUNCTIONING ITEM	
1. Remove control valve assembly. Refer to AT-259. 2. Check the following items: ● Shift valve A ● Shift valve B ● Shift solenoid valve A ● Shift solenoid valve B ● Pilot valve ● Pilot filter 3. Disassemble A/T. 4. Check the following items: ● Forward clutch assembly ● Forward one-way clutch ● Low one-way clutch ● High clutch assembly ● Torque converter ● Oil pump assembly		
	OK or NG	
OK	▶	GO TO 7.
NG	▶	Repair or replace damaged parts.

9. A/T Does Not Shift: $D_1 \rightarrow D_2$ Or Does Not Kickdown: $D_4 \rightarrow D_2$

=NBAT0081

SYMPTOM:

A/T does not shift from D_1 to D_2 at the specified speed.
A/T does not shift from D_4 to D_2 when depressing accelerator pedal fully at the specified speed.

1	CHECK SYMPTOM	
Are “7. Vehicle Does Not Creep Forward In “D”, “2” Or “1” Position” and “8. Vehicle Cannot Be Started From D_1” OK?		
Yes or No		
Yes	▶	GO TO 2.
No	▶	Go to “7. Vehicle Does Not Creep Forward In “D”, “2” Or “1” Position” and “8. Vehicle Cannot Be Started From D_1”, AT-218, 221.

2	CHECK PNP SWITCH CIRCUIT	
With CONSULT Does “ECU INPUT SIGNALS” in Data Monitor show damage to PNP switch circuit?		
Without CONSULT Does self-diagnosis show damage to PNP switch circuit?		
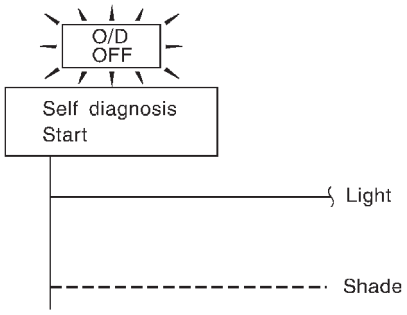 SAT367J		
Yes or No		
Yes	▶	Check PNP switch circuit. Refer to “DTC P0705”, AT-102.
No	▶	GO TO 3.

3	CHECK VEHICLE SPEED SENSOR·A/T AND VEHICLE SPEED SENSOR·MTR CIRCUIT	
Check vehicle speed sensor·A/T (revolution sensor) and vehicle speed sensor·MTR circuit. Refer to “DTC P0720 and VEHICLE SPEED SENSOR·MTR”, AT-113, 198.		
OK or NG		
OK	▶	GO TO 4.
NG	▶	Repair or replace vehicle speed sensor·A/T (revolution sensor) and vehicle speed sensor·MTR circuits.

4	CHECK THROTTLE POSITION SENSOR

Check throttle position sensor. Refer to EC-181, "Description".

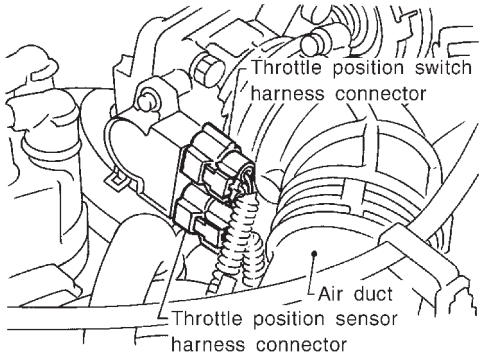

SAT329I

OK or NG

OK	▶	GO TO 5.
NG	▶	Repair or replace throttle position sensor.

5	CHECK A/T FLUID CONDITION

1. Remove oil pan.
2. Check A/T fluid condition.

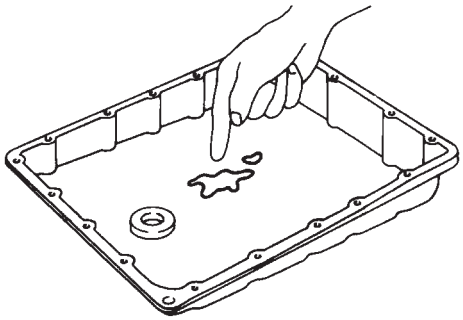

SAT171B

OK or NG

OK	▶	GO TO 6.
NG	▶	GO TO 8.

6	DETECT MALFUNCTIONING ITEM

1. Remove control valve. Refer to AT-259.
2. Check the following items:
- Shift valve A
- Shift solenoid valve A
- Pilot valve
- Pilot filter

OK or NG

OK	▶	GO TO 7.
NG	▶	Repair or replace damaged parts.

7	CHECK SYMPTOM	
Check again.		
	OK or NG	
OK	▶	**INSPECTION END**
NG	▶	1. Perform TCM input/output signal inspection. 2. If NG, recheck TCM pin terminals for damage or loose connection with harness connector.

8	DETECT MALFUNCTIONING ITEM	
1. Remove control valve. Refer to AT-259. 2. Check the following items: ● Shift valve A ● Shift solenoid valve A ● Pilot valve ● Pilot filter 3. Disassemble A/T. 4. Check the following items: ● Servo piston assembly ● Brake band ● Oil pump assembly		
	OK or NG	
OK	▶	GO TO 7.
NG	▶	Repair or replace damaged parts.

10. A/T Does Not Shift: $D_2 \rightarrow D_3$

=NBAT0082

SYMPTOM:

A/T does not shift from D_2 to D_3 at the specified speed.

1	CHECK SYMPTOM	
Are “7. Vehicle Does Not Creep Forward In “D”, “2” Or “1” Position” and “8. Vehicle Cannot Be Started From D_1” OK?		
Yes or No		
Yes	▶	GO TO 2.
No	▶	Go to “7. Vehicle Does Not Creep Forward In “D”, “2” Or “1” Position” and “8. Vehicle Cannot Be Started From D_1”, AT-218, 221.

2	CHECK PNP SWITCH CIRCUIT	
With CONSULT Does “ECU INPUT SIGNALS” in Data Monitor show damage to PNP switch circuit?		
Without CONSULT Does self-diagnosis show damage to PNP switch circuit?		
Yes or No		
Yes	▶	Check PNP switch circuit. Refer to “DTC P0705”, AT-102.
No	▶	GO TO 3.

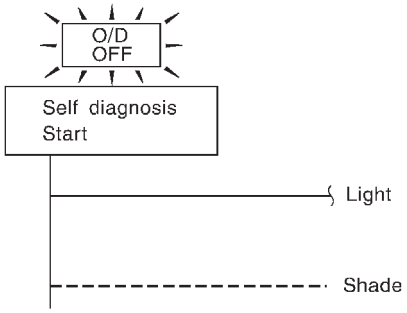

SAT367J

3	CHECK THROTTLE POSITION SENSOR	
Check throttle position sensor. Refer to EC-181, “Description”.		
OK or NG		
OK	▶	GO TO 4.
NG	▶	Repair or replace throttle position sensor.

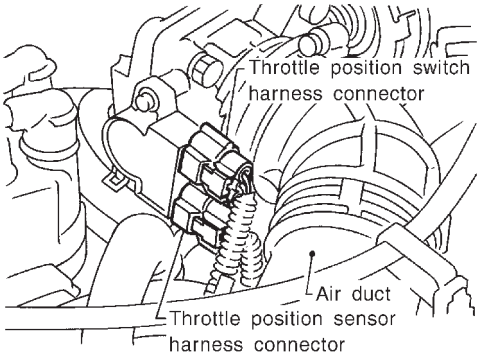

SAT329I

4	CHECK A/T FLUID CONDITION

1. Remove oil pan.
2. Check A/T fluid condition.

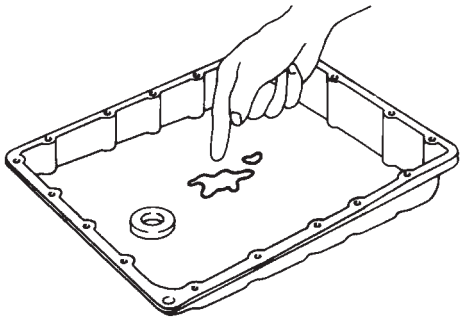

SAT171B

OK or NG

OK	▶	GO TO 5.
NG	▶	GO TO 7.

5	DETECT MALFUNCTIONING ITEM

1. Remove control valve Assembly. Refer to AT-259.
2. Check the following items:
- Shift valve B
- Shift solenoid valve B
- Pilot valve
- Pilot filter

OK or NG

OK	▶	GO TO 6.
NG	▶	Repair or replace damaged parts.

6	CHECK SYMPTOM

Check again.

OK or NG

OK	▶	**INSPECTION END**
NG	▶	1. Perform TCM input/output signal inspection. 2. If NG, recheck TCM pin terminals for damage or loose connection with harness connector.

7	DETECT MALFUNCTIONING ITEM	
1. Remove control valve Assembly. Refer to AT-259. 2. Check the following items: ● Shift valve B ● Shift solenoid valve B ● Pilot valve ● Pilot filter 3. Disassemble A/T. 4. Check the following items: ● Servo piston assembly ● High clutch assembly ● Oil pump assembly		
	OK or NG	
OK	▶	GO TO 6.
NG	▶	Repair or replace damaged parts.

11. A/T Does Not Shift: $D_3 \rightarrow D_4$

=NBAT0083

SYMPTOM:

- **A/T does not shift from D_3 to D_4 at the specified speed.**
- **A/T must be warm before D_3 to D_4 shift will occur.**

1	CHECK SYMPTOM	
Are “7. Vehicle Does Not Creep Forward In “D”, “2” Or “1” Position” and “8. Vehicle Cannot Be Started From D_1” OK?		
Yes or No		
Yes	▶	GO TO 2.
No	▶	Go to “7. Vehicle Does Not Creep Forward In “D”, “2” Or “1” Position” and “8. Vehicle Cannot Be Started From D_1”, AT-218, 221.

2	CHECK SELF-DIAGNOSTIC RESULTS	
With CONSULT Does self-diagnosis, after cruise test, show damage to any of the following circuits? ● Inhibitor switch ● Overdrive control switch ● A/T fluid temperature sensor ● Revolution sensor ● Shift solenoid valve A or B ● Vehicle speed sensor		
Yes or No		
Yes	▶	Check damaged circuit. Refer to “DTC P0705, P0710, P0720, P0750, P0755 or VHCL SPEED SEN·MTR”, AT-102, 108, 113, 169, 173 or 198.
No	▶	GO TO 3.

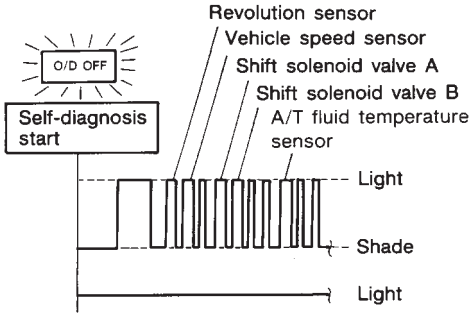

SAT363HA

3	CHECK THROTTLE POSITION SENSOR

Check throttle position sensor. Refer to EC-181, "Description".

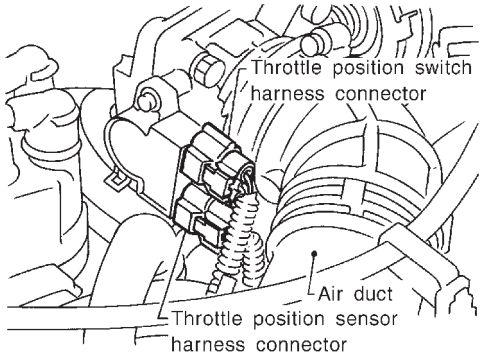

SAT329I

OK or NG

OK	▶	GO TO 4.
NG	▶	Repair or replace throttle position sensor.

4	CHECK A/T FLUID CONDITION

1. Remove oil pan.
2. Check A/T fluid condition.

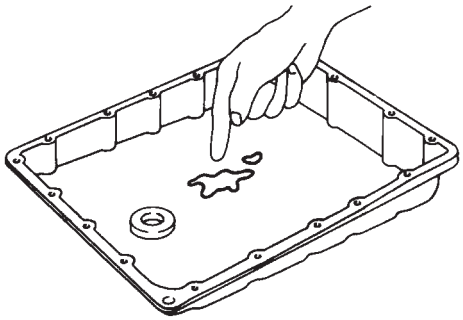

SAT171B

OK or NG

OK	▶	GO TO 5.
NG	▶	GO TO 7.

5	DETECT MALFUNCTIONING ITEM

1. Remove control valve Assembly. Refer to AT-259.
2. Check the following items:
- Shift valve B
- Overrun clutch control valve
- Shift solenoid valve B
- Pilot valve
- Pilot filter

OK or NG

OK	▶	GO TO 6.
NG	▶	Repair or replace damaged parts.

6	CHECK SYMPTOM	
Check again.		
	OK or NG	
OK	▶	**INSPECTION END**
NG	▶	1. Perform TCM input/output signal inspection. 2. If NG, recheck TCM pin terminals for damage or loose connection with harness connector.

7	DETECT MALFUNCTIONING ITEM	
1. Remove control valve Assembly. Refer to AT-259. 2. Check the following items: ● Shift valve B ● Overrun clutch control valve ● Shift solenoid valve B ● Pilot valve ● Pilot filter 3. Disassemble A/T. 4. Check the following items: ● Servo piston assembly ● Brake band ● Torque converter ● Oil pump assembly		
	OK or NG	
OK	▶	GO TO 6.
NG	▶	Repair or replace damaged parts.

12. A/T Does Not Perform Lock-up

=NBAT0084

SYMPTOM:

A/T does not perform lock-up at the specified speed.

1	CHECK SELF-DIAGNOSTIC RESULTS	
Does self-diagnosis show damage to torque converter clutch solenoid valve circuit after cruise test?		
Yes or No		
Yes	▶	Check torque converter clutch solenoid valve circuit. Refer to “DTC P0740”, AT-150.
No	▶	GO TO 2.

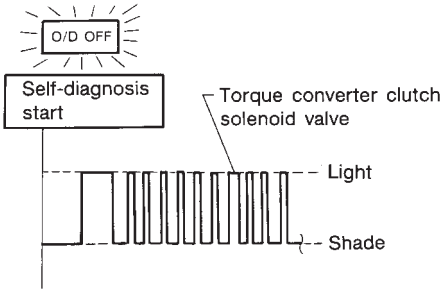

SAT346H

2	CHECK THROTTLE POSITION SENSOR	
Check throttle position sensor. Refer to EC-181, “Description”.		
OK or NG		
OK	▶	GO TO 3.
NG	▶	Repair or replace throttle position sensor.

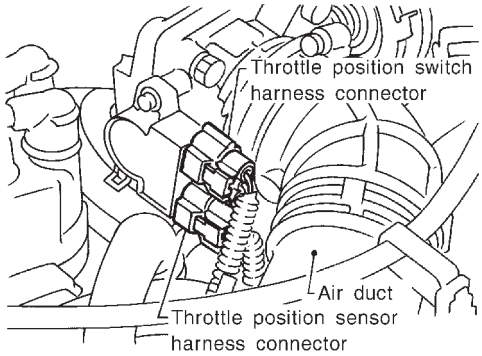

SAT329I

3	DETECT MALFUNCTIONING ITEM	
1. Remove control valve. Refer to AT-259. 2. Check following items: ● Torque converter clutch control valve ● Torque converter relief valve ● Torque converter clutch solenoid valve ● Pilot valve ● Pilot filter		
OK or NG		
OK	▶	GO TO 4.
NG	▶	Repair or replace damaged parts.

4	CHECK SYMPTOM	
Check again.		
	OK or NG	
OK	▶	**INSPECTION END**
NG	▶	1. Perform TCM input/output signal inspection. 2. If NG, recheck TCM pin terminals for damage or loose connection with harness connector.

13. A/T Does Not Hold Lock-up Condition

=NBAT0085

SYMPTOM:

A/T does not hold lock-up condition for more than 30 seconds.

1	CHECK DIAGNOSTIC RESULTS	
Does self-diagnosis show damage to engine speed signal circuit after cruise test?		

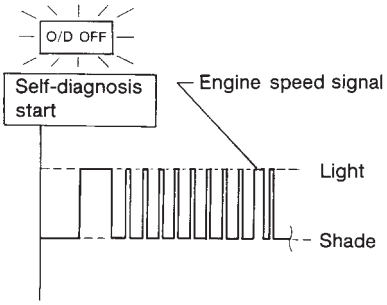

SAT347H

Yes or No

Yes	▶	Check engine speed signal circuit. Refer to “DTC P0725”, AT-117.
No	▶	GO TO 2.

2	CHECK A/T FLUID CONDITION	

1. Remove oil pan.
2. Check A/T fluid condition.

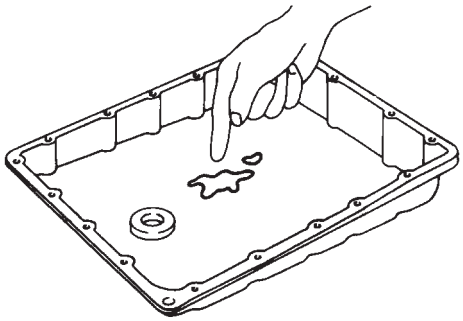

SAT171B

OK or NG

OK	▶	GO TO 3.
NG	▶	GO TO 5.

3	DETECT MALFUNCTIONING ITEM	

1. Remove control valve assembly. Refer to AT-259.
2. Check the following items:
- Torque converter clutch control valve
- Pilot valve
- Pilot filter

OK or NG

OK	▶	GO TO 4.
NG	▶	Repair or replace damaged parts.

4	CHECK SYMPTOM	
Check again.		
	OK or NG	
OK	▶	**INSPECTION END**
NG	▶	1. Perform TCM input/output signal inspection. 2. If NG, recheck TCM pin terminals for damage or loose connection with harness connector.

5	DETECT MALFUNCTIONING ITEM	
1. Remove control valve assembly. Refer to AT-259. 2. Check the following items: ● Torque converter clutch control valve ● Pilot valve ● Pilot filter 3. Disassemble A/T. 4. Check torque converter and oil pump assembly.		
	OK or NG	
OK	▶	GO TO 4.
NG	▶	Repair or replace damaged parts.

14. Lock-up Is Not Released

=NBAT0086

SYMPTOM:

Lock-up is not released when accelerator pedal is released.

1	CHECK THROTTLE POSITION SWITCH CIRCUIT
With CONSULT Does “ECU INPUT SIGNALS” in Data Monitor show damage to closed throttle position switch circuit?	
Without CONSULT Does self-diagnosis show damage to closed throttle position switch circuit?	

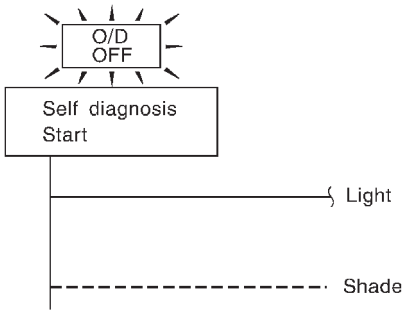

SAT367J

Yes or No

Yes	▶	Check closed throttle position switch circuit. Refer to “DTC P1705”, AT-179.
No	▶	GO TO 2.

2	CHECK SYMPTOM
Check again.	

OK or NG

OK	▶	**INSPECTION END**
NG	▶	1. Perform TCM input/output signal inspection. 2. If NG, recheck TCM pin terminals for damage or loose connection with harness connector.

15. Engine Speed Does Not Return To Idle (Light Braking $D_4 \rightarrow D_3$)

=NBAT0087

SYMPTOM:

- **Engine speed does not smoothly return to idle when A/T shifts from D_4 to D_3.**
- **Vehicle does not decelerate by engine brake when turning overdrive control switch OFF.**
- **Vehicle does not decelerate by engine brake when shifting A/T from "D" to "2" position.**

1	CHECK SELF-DIAGNOSTIC RESULTS	
Does self-diagnosis show damage to overrun clutch solenoid valve circuit after cruise test?		
Yes or No		
Yes	▶	Check overrun clutch solenoid valve circuit. Refer to "DTC P1760", AT-187.
No	▶	GO TO 2.

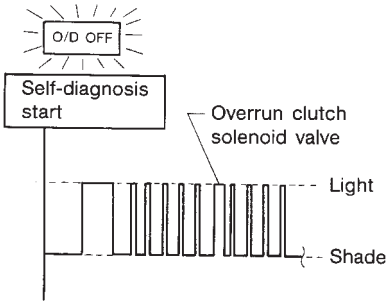

SAT348H

2	CHECK THROTTLE POSITION SENSOR	
Check throttle position sensor. Refer to EC-181, "Description".		
OK or NG		
OK	▶	GO TO 3.
NG	▶	Repair or replace throttle position sensor.

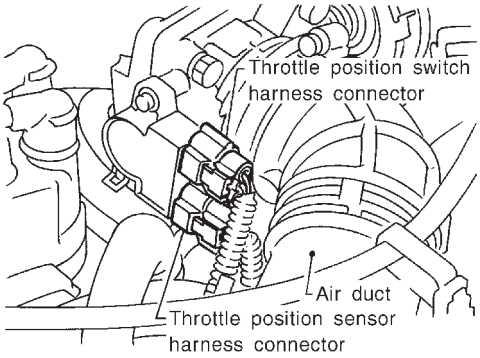

SAT329I

3	CHECK A/T FLUID CONDITION

1. Remove oil pan.
2. Check A/T fluid condition.

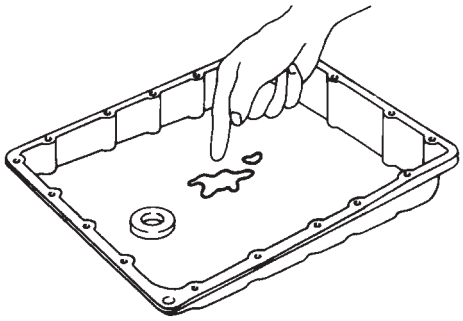

SAT171B

OK or NG

OK	▶	GO TO 4.
NG	▶	GO TO 6.

4	DETECT MALFUNCTIONING ITEM

1. Remove control valve assembly. Refer to AT-259.
2. Check the following items:
- Overrun clutch control valve
- Overrun clutch reducing valve
- Overrun clutch solenoid valve

OK or NG

OK	▶	GO TO 5.
NG	▶	Repair or replace damaged parts.

5	CHECK SYMPTOM

Check again.

OK or NG

OK	▶	**INSPECTION END**
NG	▶	1. Perform TCM input/output signal inspection. 2. If NG, recheck TCM pin terminals for damage or loose connection with harness connector.

6	DETECT MALFUNCTIONING ITEM

1. Remove control valve assembly. Refer to AT-259.
2. Check the following items:
- Overrun clutch control valve
- Overrun clutch reducing valve
- Overrun clutch solenoid valve
3. Disassemble A/T.
4. Check the following items:
- Overrun clutch assembly
- Oil pump assembly

OK or NG

OK	▶	GO TO 5.
NG	▶	Repair or replace damaged parts.

16. Vehicle Does Not Start From D_1

NBAT0088

SYMPTOM:

Vehicle does not start from D_1 on Cruise test — Part 2.

1	CHECK SELF-DIAGNOSTIC RESULTS	
Does self-diagnosis show damage to vehicle speed sensor·A/T (revolution sensor), shift solenoid valve A, B or vehicle speed sensor·MTR after cruise test?		
	Yes or No	
Yes	▶	Check damaged circuit. Refer to “DTC P0720, P0750, P0755 or VHCL SPEED SEN·MTR”, AT-113, 169, 173 or 198.
No	▶	GO TO 2.

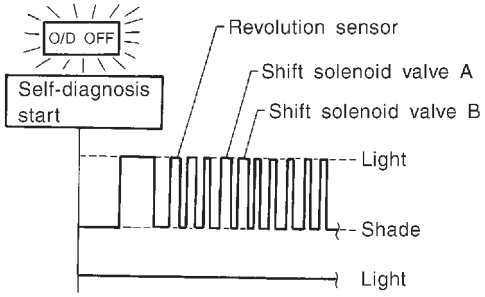

SAT633I

2	CHECK SYMPTOM	
Check again.		
	OK or NG	
OK	▶	Go to “8. Vehicle Cannot Be Started From D_1”, AT-221.
NG	▶	1. Perform TCM input/output signal inspection. 2. If NG, recheck TCM pin terminals for damage or loose connection with harness connector.

17. A/T Does Not Shift: $D_4 \rightarrow D_3$, When Overdrive Control Switch "ON" → "OFF"

=NBAT0089

SYMPTOM:

A/T does not shift from D_4 to D_3 when changing overdrive control switch to "OFF" position.

1	CHECK OVERDRIVE CONTROL SWITCH CIRCUIT
With CONSULT Does "ECU INPUT SIGNALS" in Data Monitor show damage to overdrive control switch circuit?	
Without CONSULT Does self-diagnosis show damage to overdrive control switch circuit?	

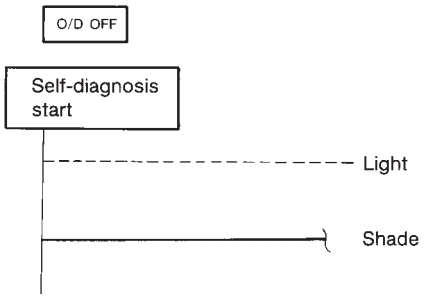

SAT344H

Yes or No

Yes	▶	Check overdrive control switch circuit. Refer to AT-245.
No	▶	Go to "10. A/T Does Not Shift: $D_2 \rightarrow D_3$", AT-227.

18. A/T Does Not Shift: $D_3 \rightarrow 2_2$, When Selector Lever "D" $\rightarrow$ "2" Position

=NBAT0090

SYMPTOM:

A/T does not shift from D_3 to 2_2 when changing selector lever from "D" to "2" position.

1	CHECK PNP SWITCH CIRCUIT
With CONSULT Does "ECU INPUT SIGNALS" in Data Monitor show damage to PNP switch circuit?	
Without CONSULT Does self-diagnosis show damage to PNP switch circuit? 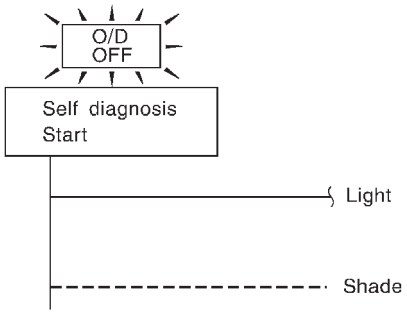 SAT367J	
Yes or No	
Yes ▶	Check PNP switch circuit. Refer to "DTC P0705", AT-102.
No ▶	Go to "9. A/T Does Not Shift: $D_1 \rightarrow D_2$ Or Does Not Kickdown: $D_4 \rightarrow D_2$", AT-224.

19. A/T Does Not Shift: $2_2 \rightarrow 1_1$, When Selector Lever "2" → "1" Position

=NBAT0091

SYMPTOM:

A/T does not shift from 2_2 to 1_1 when changing selector lever from "2" to "1" position.

1	CHECK PNP SWITCH CIRCUIT
With CONSULT Does "ECU INPUT SIGNALS" in Data Monitor show damage to PNP switch circuit?	
Without CONSULT Does self-diagnosis show damage to PNP switch circuit?	

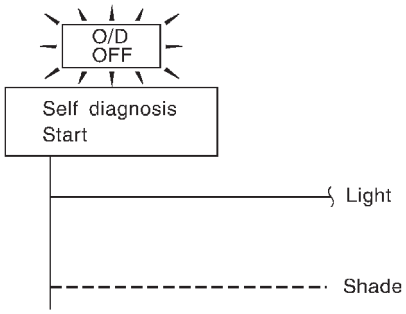

SAT367J

Yes or No

Yes	▶	Check PNP switch circuit. Refer to "DTC P0705", AT-102.
No	▶	GO TO 2.

2	CHECK SYMPTOM
Check again.	

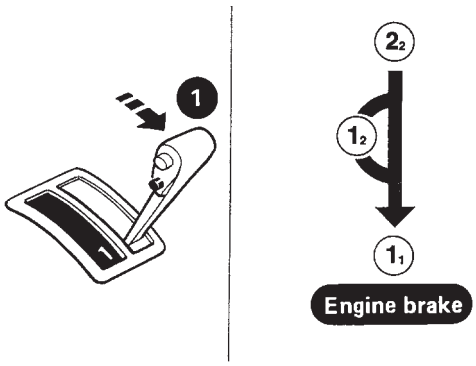

SAT778B

OK or NG

OK	▶	**INSPECTION END**
NG	▶	1. Perform TCM input/output signal inspection. 2. If NG, recheck TCM pin terminals for damage or loose connection with harness connector.

20. Vehicle Does Not Decelerate By Engine Brake

NBAT0092

SYMPTOM:

Vehicle does not decelerate by engine brake when shifting from 2_2 (1_2) to 1_1.

1	CHECK SYMPTOM	
Is “6. Vehicle Does Not Creep Backward In “R” Position” OK?		
	Yes or No	
Yes	▶	Go to “15. Engine Speed Does Not Return To Idle (Light Braking $D_4 \rightarrow D_3$)”, AT-238.
No	▶	Go to “6. Vehicle Does Not Creep Backward In “R” Position”, AT-215.

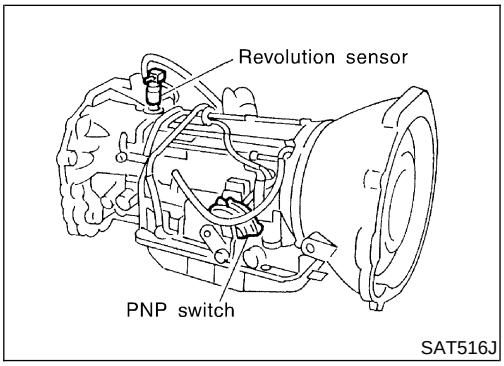

SAT516J

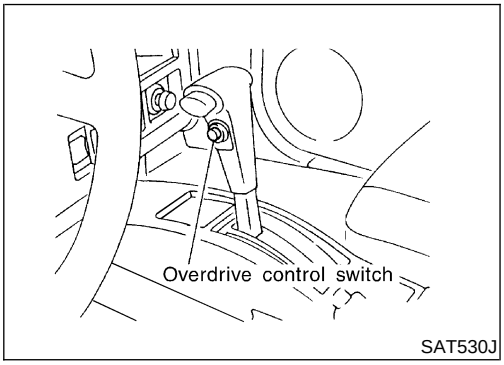

SAT530J

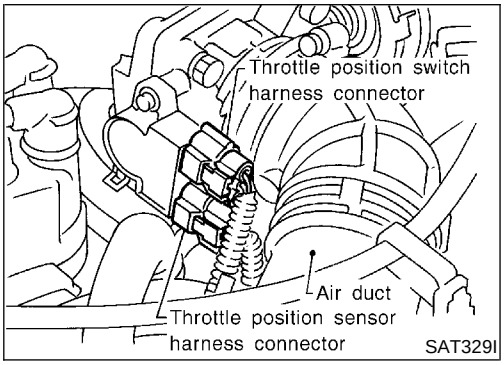

SAT329I

21. TCM Self-diagnosis Does Not Activate (PNP, Overdrive Control and Throttle Position Switches Circuit Checks)

NBAT0204

SYMPTOM:

O/D OFF indicator lamp does not come on in TCM self-diagnostic procedure even the lamp circuit is good.

DESCRIPTION

NBAT0204S01

- PNP switch
  The PNP switch assemble includes a transmission range switch. The transmission range switch detects the selector position and sends a signal to the TCM.
- Overdrive control switch
  Detects the overdrive control switch position (ON or OFF) and sends a signal to the TCM.
- Throttle position switch
  Consists of a wide open throttle position switch and a closed throttle position switch.
  The wide open throttle position switch sends a signal to the TCM when the throttle valve is open at least 1/2 of the full throttle position. The closed throttle position switch sends a signal to the TCM when the throttle valve is fully closed.

DIAGNOSTIC PROCEDURE

=NBAT0204S03

NOTE:
The diagnostic procedure includes inspections for the overdrive control and throttle position switch circuits.

1	CHECK PNP SWITCH CIRCUIT (With CONSULT)

With CONSULT

1. Turn ignition switch to "ON" position.
   (Do not start engine.)
2. Select "ECU INPUT SIGNALS" in "DATA MONITOR" mode for "A/T" with CONSULT.
3. Read out "P", "R", "N", "D", "2" and "1" position switches moving selector lever to each position. Check the signal of the selector lever position is indicated properly.

☆ MONITOR	☆ NO FAIL
R POSITION SW	OFF
D POSITION SW	OFF
2 POSITION SW	OFF
1 POSITION SW	OFF
ASCD•CRUISE	OFF
ASCD•OD CUT	OFF
KICKDOWN SW	OFF
POWER SHIFT SW	OFF
CLOSED THL/SW	OFF

RECORD

SAT761I

OK or NG

OK	▶	GO TO 3.
NG	▶	**Check the following items:** ● PNP switch Refer to "Component Inspection", AT-250. ● Harness for short or open between ignition switch and PNP switch (Main harness) ● Harness for short or open between PNP switch and TCM (Main harness)

2	CHECK PNP SWITCH CIRCUIT (Without CONSULT)

Without CONSULT

1. Turn ignition switch to "ON" position.
   (Do not start engine.)
2. Check voltage between TCM terminals 26, 27, 34, 35, 36 and ground while moving selector lever through each position.

Lever position	Terminals				
	36	35	34	27	26
P, N	**B**	0	0	0	0
R	0	**B**	0	0	0
D	0	0	**B**	0	0
2	0	0	0	**B**	0
1	0	0	0	0	**B**

MTBL0205

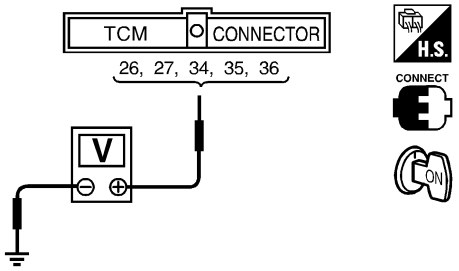

SAT517J

Does battery voltage exist (B) or non-existent (0)?

Yes ▶	GO TO 3.
No ▶	**Check the following items:** ● PNP switch Refer to "Component Inspection", AT-250. ● Harness for short or open between ignition switch and PNP switch (Main harness) ● Harness for short or open between PNP switch and TCM (Main harness)

3	CHECK OVERDRIVE CONTROL SWITCH CIRCUIT

With CONSULT

1. Turn ignition switch to "ON" position.
   (Do not start engine.)
2. Select "ECU INPUT SIGNALS" in "DATA MONITOR" mode for "A/T" with CONSULT.
3. Read out "OVERDRIVE SWITCH". Check the signal of the overdrive control switch is indicated properly.
   (Overdrive control switch "ON" displayed on CONSULT means overdrive "OFF".)

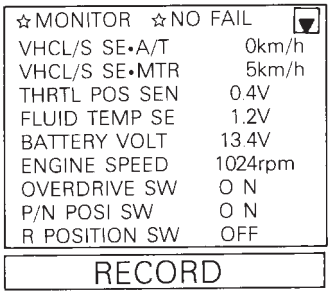

SAT076H

Without CONSULT

1. Turn ignition switch to "ON" position.
   (Do not start engine.)
2. Check voltage between TCM terminal 22 and ground when overdrive control switch is "ON" and "OFF".

   Voltage:
   - **Switch position "ON":**
     Battery voltage
   - **Switch position "OFF":**
     1V or less

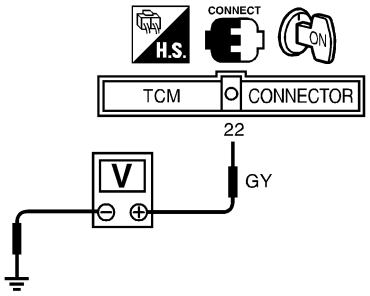

SAT531J

OK or NG

OK (With CONSULT)	▶	GO TO 4.
OK (Without CONSULT)	▶	GO TO 5.
NG	▶	**Check the following items:** ● Overdrive control switch Refer to "Component Inspection", AT-250. ● Harness for short or open between TCM and overdrive control switch (Main harness) ● Harness for short or open of ground circuit for overdrive control switch (Main harness)

4	CHECK THROTTLE POSITION SWITCH CIRCUIT (With CONSULT)

With CONSULT

1. Turn ignition switch to "ON" position.
   (Do not start engine.)
2. Select "ECU INPUT SIGNALS" in "DATA MONITOR" mode for "A/T" with CONSULT.
3. Apply vacuum to the throttle opener, then check the following. Refer to steps 1 and 2 of "Preparation", "TCM SELF-DIAGNOSTIC PROCEDURE (No Tools)", AT-46.
4. Read out "CLOSED THL/SW" and "W/O THRL/P-SW" depressing and releasing accelerator pedal.
   Check the signal of throttle position switch is indicated properly.

Accelerator pedal condition	Data monitor	
	CLOSED THL/SW	W/O THRL/P-SW
Released	ON	OFF
Fully depressed	OFF	ON

MTBL0011

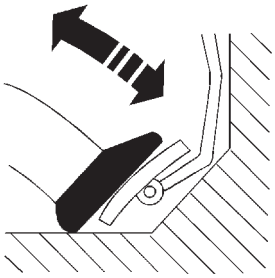

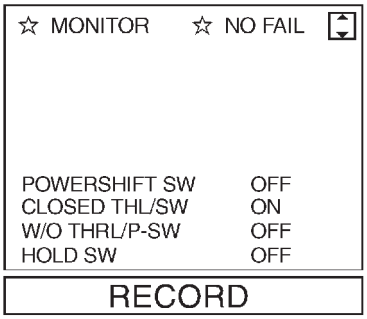

SAT052I

OK or NG

OK	▶	GO TO 6.
NG	▶	**Check the following items:** ● Throttle position switch Refer to "Component Inspection", AT-251. ● Harness for short or open between ignition switch and throttle position switch (Main harness) ● Harness for short or open between throttle position switch and TCM (Main harness)

5	CHECK THROTTLE POSITION SWITCH CIRCUIT (Without CONSULT)

Without CONSULT

1. Turn ignition switch to "ON" position.
   (Do not start engine.)
2. Check voltage between TCM terminals 16, 17 and ground while depressing, and releasing accelerator pedal slowly. (after warming up engine)
   [Refer to "Preparation", "TCM SELF-DIAGNOSTIC PROCEDURE (No Tools)", AT-46.]

Accelerator pedal condition	Voltage	
	Terminal No. 16	Terminal No. 17
Released	Battery voltage	1V or less
Fully depressed	1V or less	Battery voltage

MTBL0206

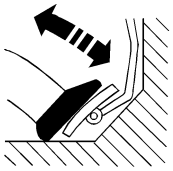

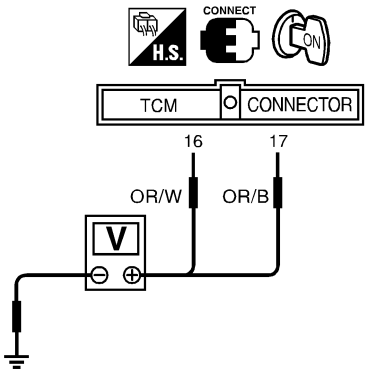

SAT526J

OK or NG

OK	▶	GO TO 6.
NG	▶	**Check the following items:** ● Throttle position switch Refer to "Component Inspection", AT-251. ● Harness for short or open between ignition switch and throttle position switch (Main harness) ● Harness for short or open between throttle position switch and TCM (Main harness)

6	CHECK DTC

Perform Diagnostic procedure, AT-245.

OK or NG

OK	▶	**INSPECTION END**
NG	▶	1. Perform TCM input/output signal inspection. 2. If NG, recheck TCM pin terminals for damage or loose connection with harness connector.

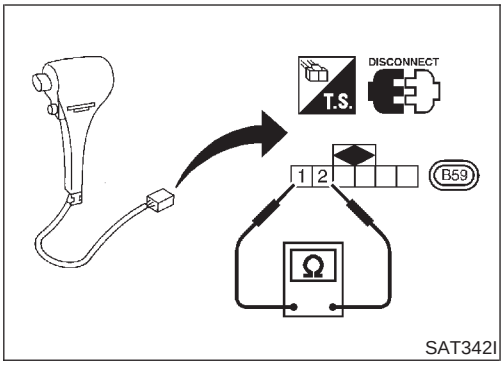

SAT342I

COMPONENT INSPECTION

NBAT0204S04

Overdrive Control Switch

NBAT0204S0401

- Check continuity between two terminals.

Continuity:

Switch position "ON":

No

Switch position "OFF":

Yes

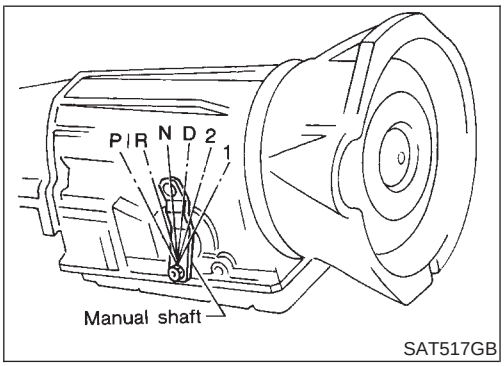

SAT517GB

Park/Neutral Position Switch

NBAT0204S0402

1. Check continuity between terminals 1 and 2 and between terminals 3 and 4, 5, 6, 7, 8, 9 while moving manual shaft through each position.

Lever position	Terminal No.	
P	1 - 2	3 - 4
R	3 - 5	
N	1 - 2	3 - 6
D	3 - 7	
2	3 - 8	
1	3 - 9	

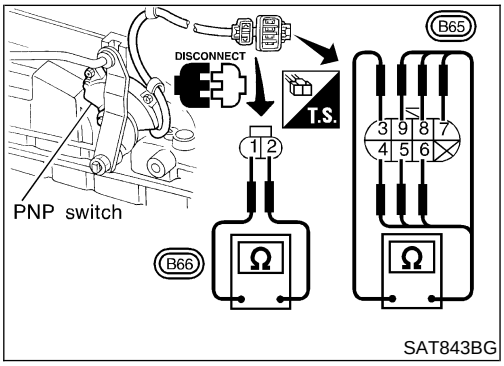

SAT843BG

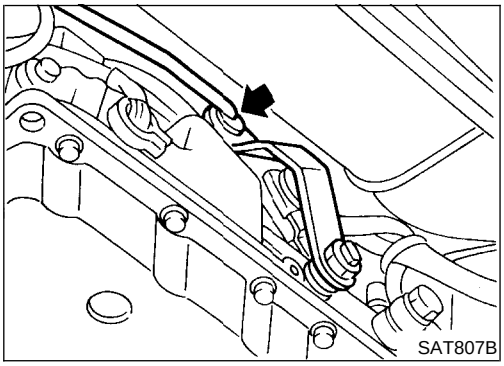
SAT807B

2. If NG, check again with manual control linkage disconnected from manual shaft of A/T assembly. Refer to step 1.
3. If OK on step 2, adjust manual control linkage. Refer to AT-261.

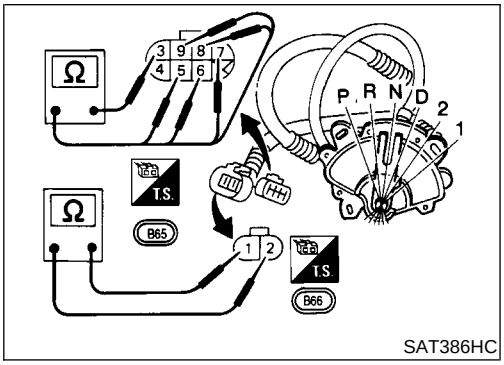

SAT386HC

4. If NG on step 2, remove PNP switch from A/T and check continuity of PNP switch terminals. Refer to step 1.
5. If OK on step 4, adjust PNP switch. Refer to AT-260.
6. If NG on step 4, replace PNP switch.

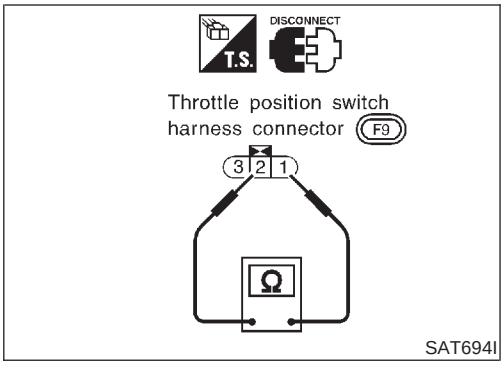

Throttle Position Switch

NBAT0204S0403

Closed Throttle Position Switch (Idle Position)

- Check continuity between terminals 1 and 2.
  [Refer to "Preparation", "TCM SELF-DIAGNOSTIC PROCEDURE (No Tools)", AT-46.]

Accelerator pedal condition	Continuity
Released	Yes
Depressed	No

- To adjust closed throttle position switch, refer to EC-99, "Basic Inspection".

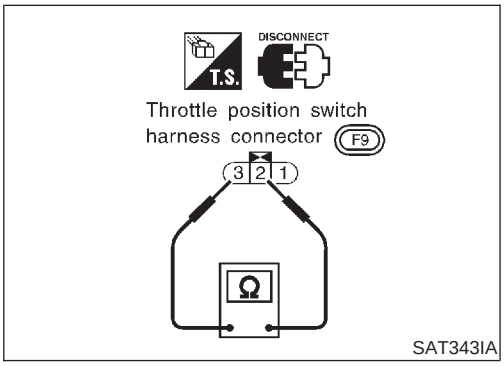

Wide Open Throttle Position Switch

- Check continuity between terminals 2 and 3.

Accelerator pedal condition	Continuity
Released	No
Depressed	Yes

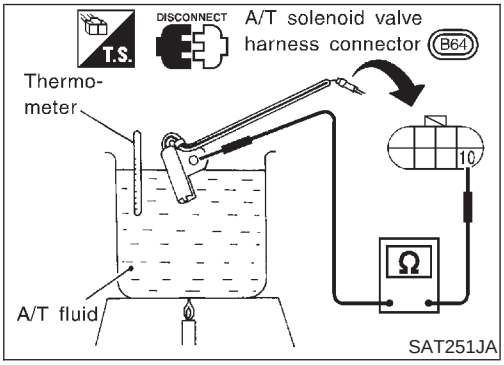

A/T Fluid Temperature Switch

NBAT0204S0404

1. Make sure the A/T fluid warning lamp lights when the key is inserted and turned to "ON".
2. Make sure the A/T fluid warning lamp goes off when turning the ignition switch to "ON".
3. Check resistance between terminal 10 and ground while changing temperature as shown at left.

Temperature °C (°F)	Resistance
140 (284) or more	Yes
140 (284) or less	No

Description

NBAT0093

- The mechanical key interlock mechanism also operates as a shift lock:
  With the key switch turned to “ON”, the selector lever cannot be shifted from “P” (parking) to any other position unless the brake pedal is depressed.
  With the key removed, the selector lever cannot be shifted from “P” to any other position.
  The key cannot be removed unless the selector lever is placed in “P”.
- The shift lock and key interlock mechanisms are controlled by the ON-OFF operation of the shift lock solenoid and by the operation of the rotator and slider located inside the key cylinder, respectively.

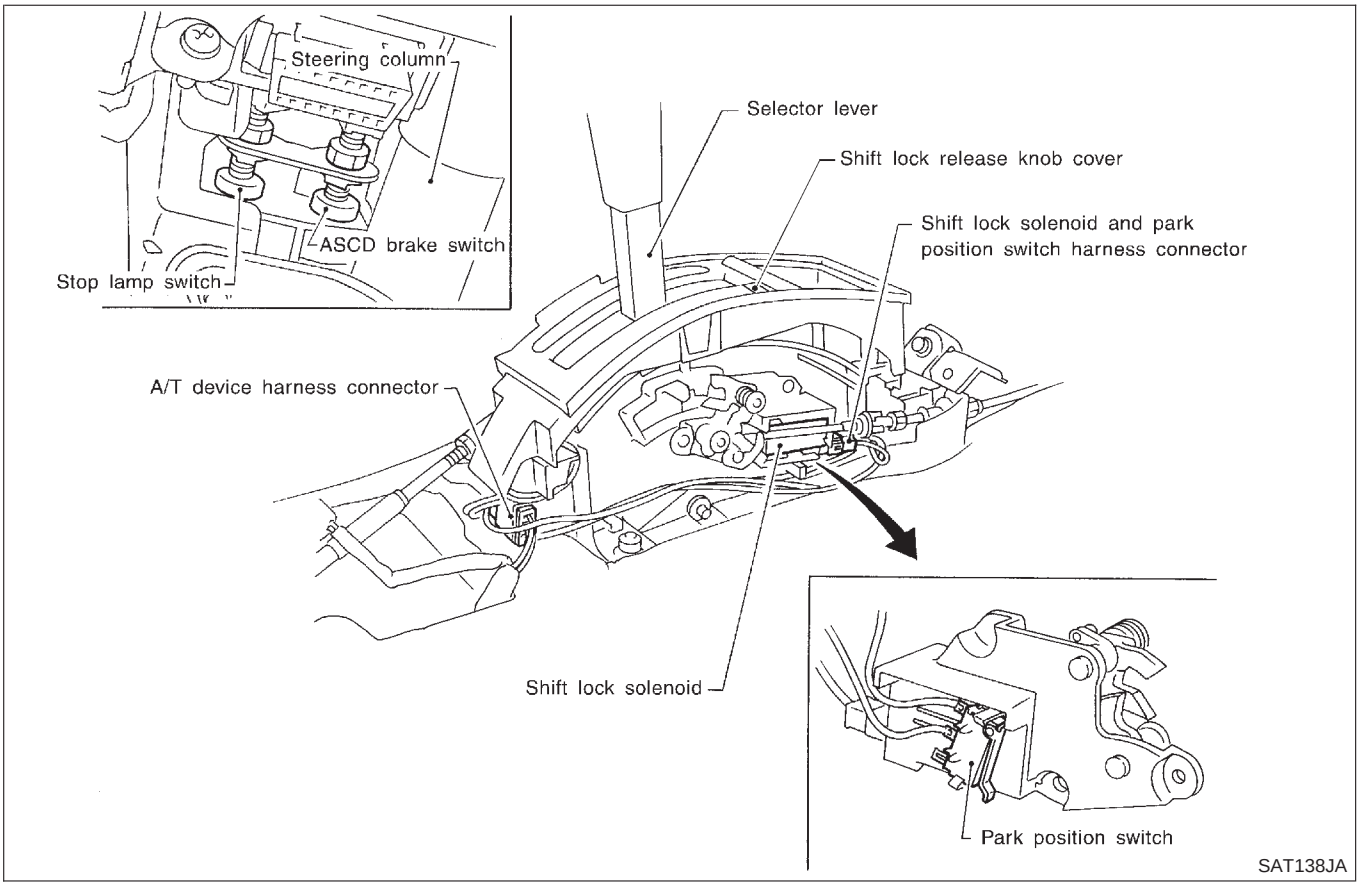

Wiring Diagram — SHIFT —

NBAT0094

AT-SHIFT-01

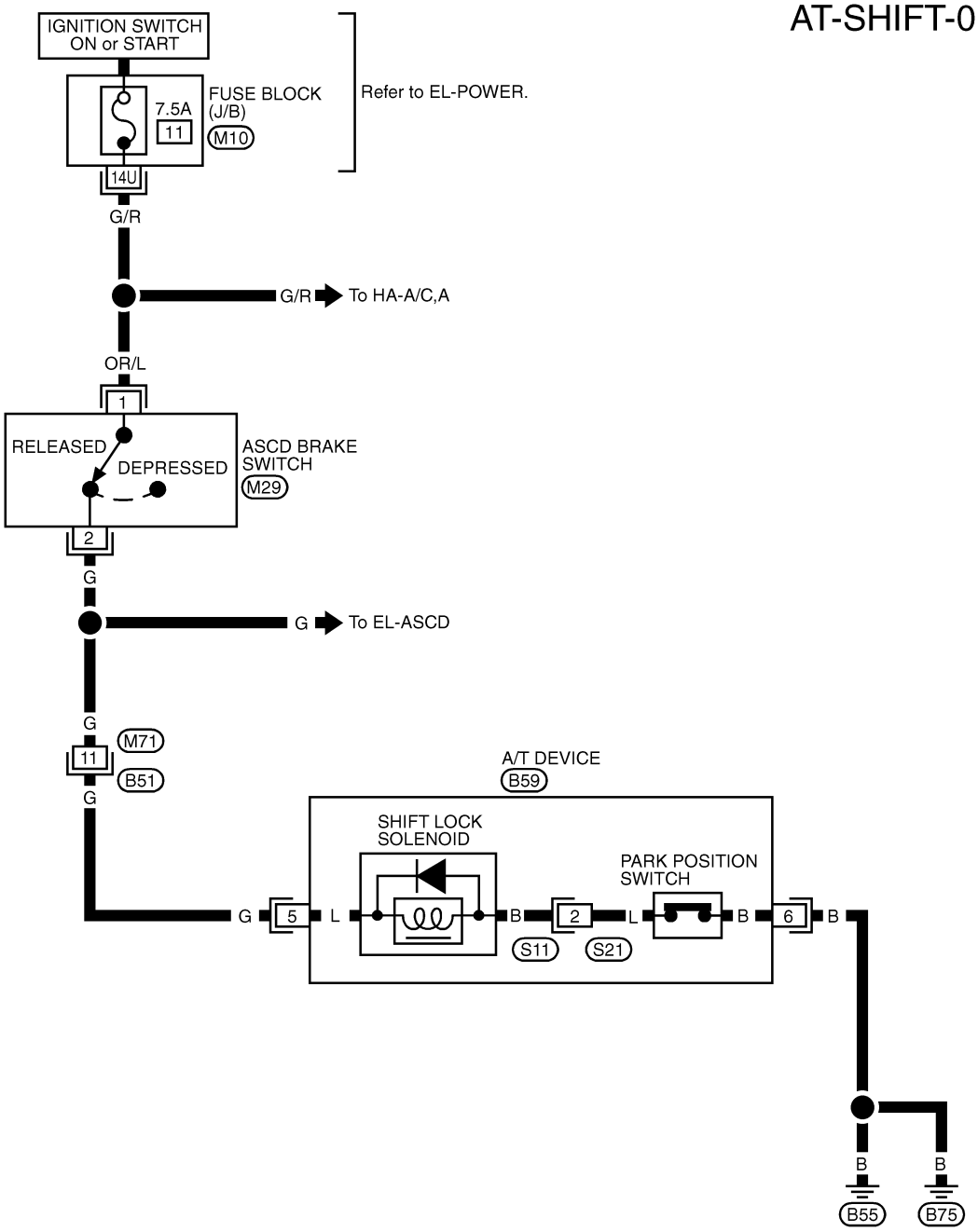

Refer to last page (Foldout page).
M10

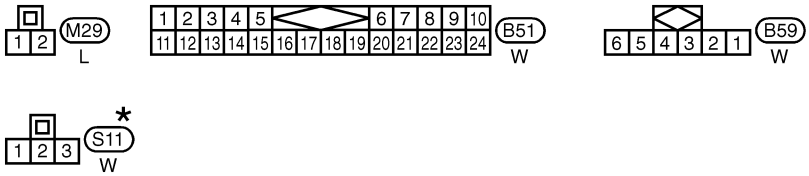

* : This connector is not shown in "HARNESS LAYOUT" in EL section.

MAT748A

Diagnostic Procedure

NBAT0095

SYMPTOM 1:

- **Selector lever cannot be moved from “P” position with key in “ON” position and brake pedal applied.**
- **Selector lever can be moved from “P” position with key in “ON” position and brake pedal released.**
- **Selector lever can be moved from “P” position when key is removed from key cylinder.**

SYMPTOM 2:

Ignition key cannot be removed when selector lever is set to “P” position. It can be removed when selector lever is set to any position except “P”.

1	CHECK KEY INTERLOCK CABLE	
Check key interlock cable for damage.		
	OK or NG	
OK	▶	GO TO 2.
NG	▶	Repair key interlock cable. Refer to “Key Interlock Cable”, AT-257.

2	CHECK SELECTOR LEVER POSITION	
Check selector lever position for damage.		
	OK or NG	
OK	▶	GO TO 3.
NG	▶	Check selector lever. Refer to “ON-VEHICLE SERVICE — Inhibitor Switch and Manual Control Linkage Adjustment”, AT-260 and AT-261.

3	CHECK POWER SOURCE	
1. Turn ignition switch to “ON” position. (Do not start engine.) 2. Check voltage between ASCD brake switch harness terminal 1 and ground.		

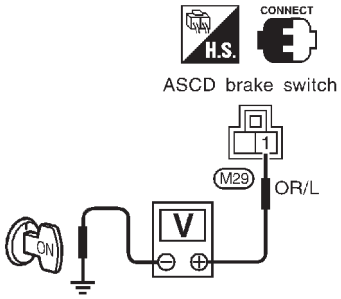

SAT917HJ

	Does battery voltage exist?	
Yes	▶	GO TO 4.
No	▶	**Check the following items:** ● Harness for short or open between battery and ASCD brake switch harness terminal 1 ● Fuse ● Ignition switch (Refer to EL section.)

4	CHECK INPUT SIGNAL (BRAKE SWITCH)

Turn ignition switch to "ON" position.
(Do not start engine.)

- Check voltage between A/T device harness terminal 5 and ground.

Voltage:

Brake pedal depressed:

0V

Brake pedal released:

Battery voltage

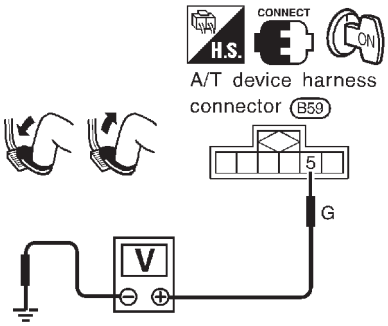

SAT346IA

OK or NG

OK	▶	GO TO 5.
NG	▶	**Check the following items:** • Harness for short or open between A/T device harness connector 5 and ASCD brake switch harness connector 2 • ASCD brake switch (Refer to "Component Check", AT-256.)

5	CHECK GROUND CIRCUIT

1. Turn ignition switch to "OFF" position.
2. Disconnect A/T device harness connector.
3. Check continuity between A/T device harness terminal 6 and ground.

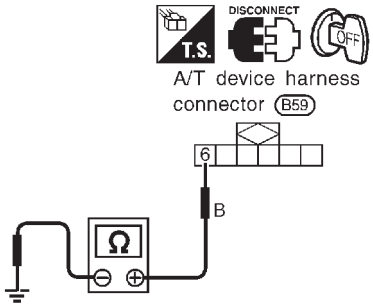

SAT347I

OK or NG

OK	▶	GO TO 6.
NG	▶	Repair harness or connector.

6	CHECK PARK POSITION SWITCH

(Refer to "Component Check", AT-256.)

OK or NG

OK	▶	GO TO 7.
NG	▶	Replace park position switch.

7	CHECK SHIFT LOCK SOLENOID	
(Refer to "Component Check", AT-256.)		
	OK or NG	
OK	▶	GO TO 8.
NG	▶	Replace shift lock solenoid.

8	CHECK SHIFT LOCK OPERATION	
1. Reconnect shift lock harness connector. 2. Turn ignition switch from "OFF" to "ON" position. (Do not start engine.) 3. Recheck shift lock operation.		
	OK or NG	
OK	▶	**INSPECTION END**
NG	▶	1. Perform A/T device input/output signal inspection test. 2. If NG, recheck harness connector connection.

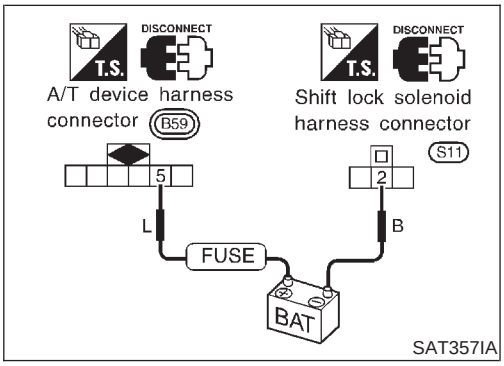

SAT357IA

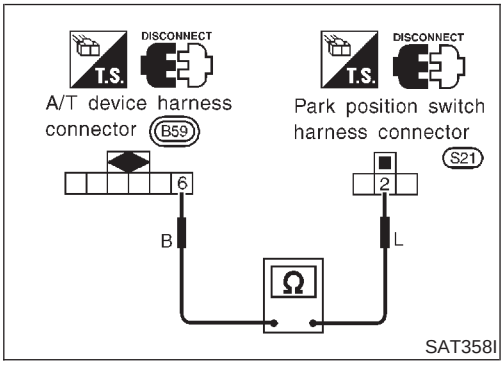

SAT358I

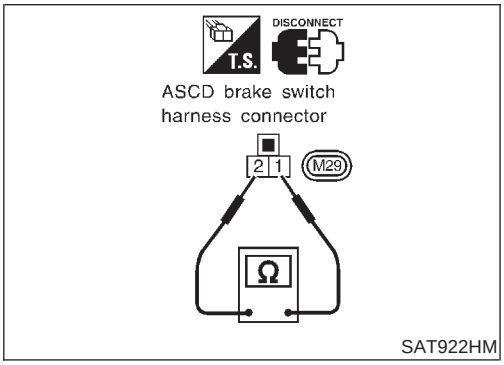

SAT922HM

Component Check

NBAT0096

SHIFT LOCK SOLENOID

NBAT0096S01

- Check operation by applying battery voltage between shift lock solenoid harness connector terminal 2 and A/T device harness connector terminal 5.

PARK POSITION SWITCH

NBAT0096S02

- heck continuity between park position switch harness connector terminal 2 and A/T device harness connector terminal 6.

Condition	Continuity
When selector lever is set in "P" position and selector lever button is released	Yes
Except above	No

ASCD BRAKE SWITCH

NBAT0096S03

- Check continuity between ASCD brake switch harness connector terminals 1 and 2.

Condition	Continuity
When brake pedal is depressed	No
When brake pedal is released	Yes

Check ASCD brake switch after adjusting brake pedal — refer to BR-13, "Removal and Installation".

Components

NBAT0097

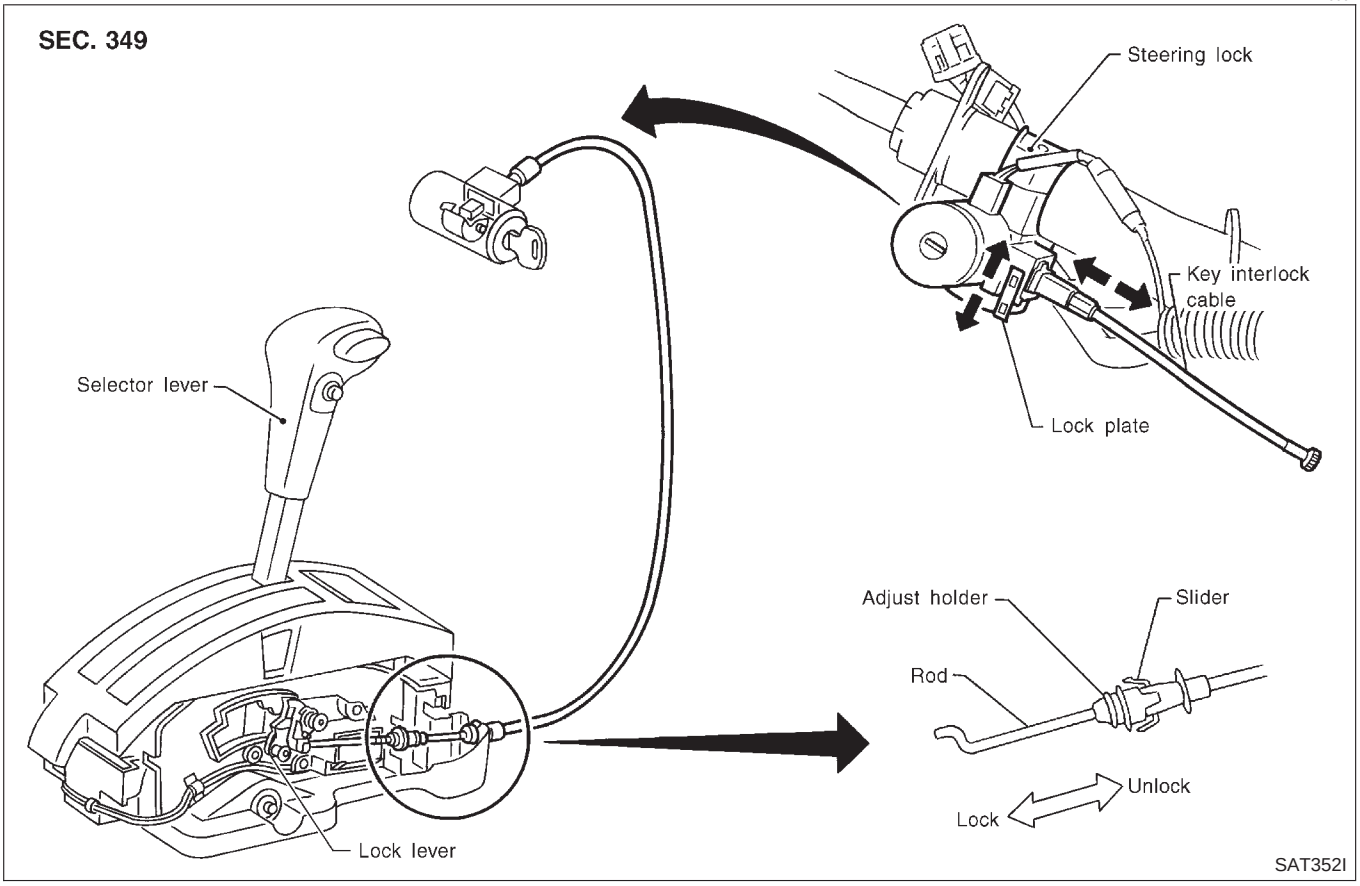

CAUTION:

- **Install key interlock cable in such a way that it will not be damaged by sharp bends, twists or interference with adjacent parts.**
- **After installing key interlock cable to control device, make sure that casing cap and bracket are firmly secured in their positions. If casing cap can be removed with an external load of less than 39.2 N (4.0 kg, 8.8 lb), replace key interlock cable with new one.**

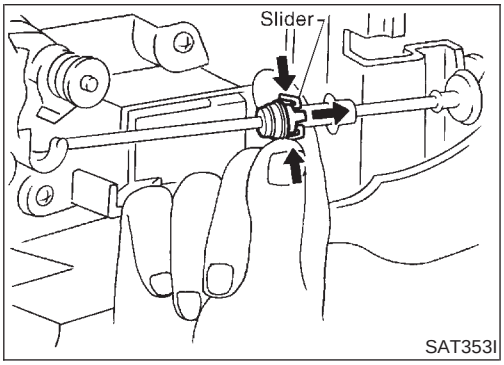

Removal

NBAT0098

Unlock slider from adjuster holder and remove rod from cable.

Installation

NBAT0099

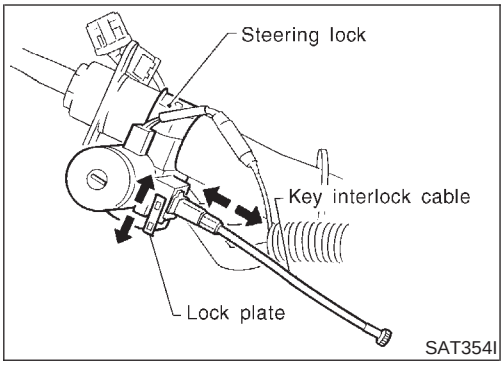

1. Set key interlock cable to steering lock assembly and install lock plate.
2. Clamp cable to steering column and fix to control cable with band.
3. Set selector lever to P position.

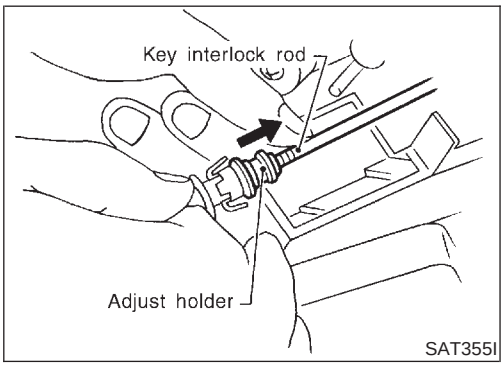

4. Insert interlock rod into adjuster holder.

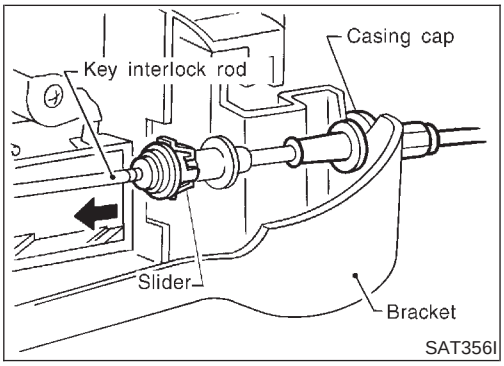

5. Install casing cap to bracket.
6. Move slider in order to fix adjuster holder to interlock rod.

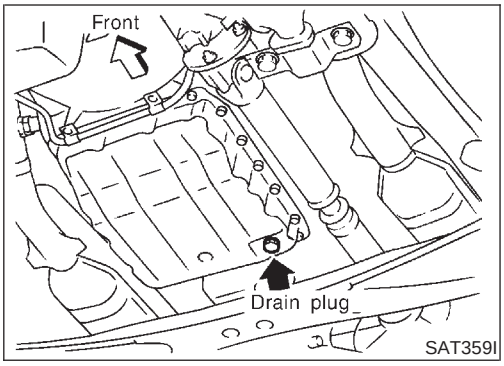

SAT359I

Control Valve Assembly and Accumulators

NBAT0100

REMOVAL

NBAT0100S01

1. Remove exhaust front tube.
2. Remove oil pan and gasket and drain ATF.

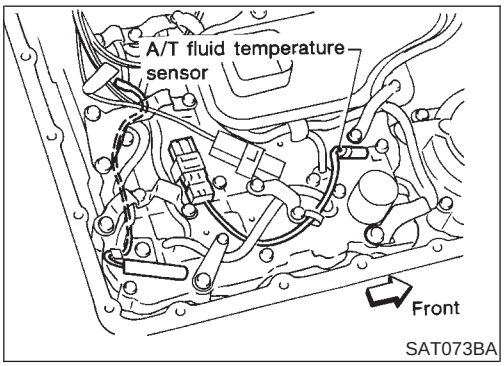

SAT073BA

3. Remove A/T fluid temperature sensor if necessary.
4. Remove oil strainer.

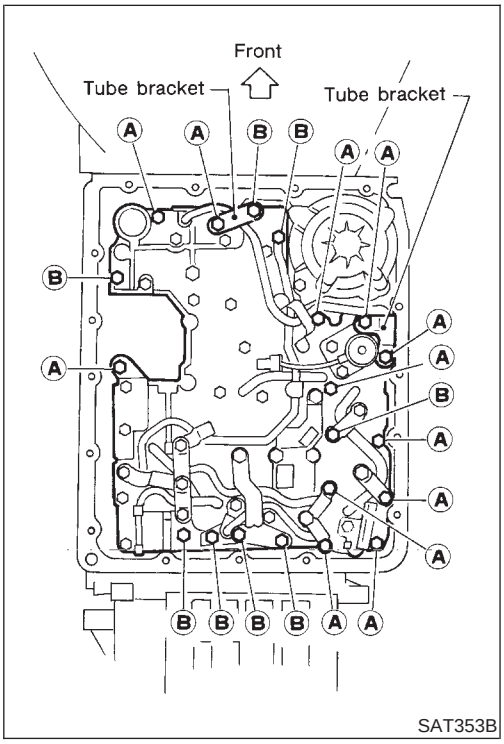

SAT353B

5. Remove control valve assembly by removing fixing bolts and disconnecting harness connector.

Bolt length and location

Bolt symbol	ℓ mm (in) ℓ
A	33 (1.30)
B	45 (1.77)

6. Remove solenoids and valves from valve body if necessary.
7. Remove terminal cord assembly if necessary.

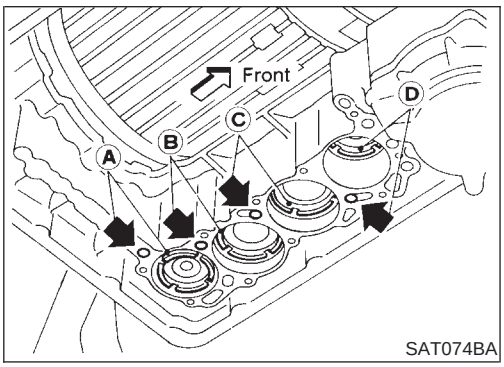

SAT074BA

8. Remove accumulator **A, B, C** and **D** by applying compressed air if necessary.
- **Hold each piston with rag.**
9. Reinstall any part removed.
- **Always use new sealing parts.**

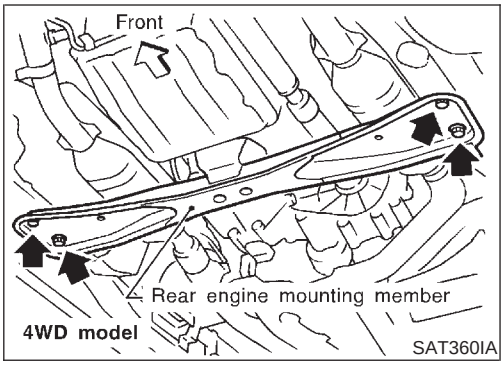

Revolution Sensor Replacement

NBAT0101

1. Remove rear engine mounting member from side member while supporting A/T with transfer case with jack. Tighten rear engine mounting member to the specified torque. Refer to EM-44, “Rear Engine Mounting”.
2. Lower A/T with transfer case as much as possible.
3. Remove revolution sensor from A/T.
4. Reinstall any part removed.

- **Always use new sealing parts.**

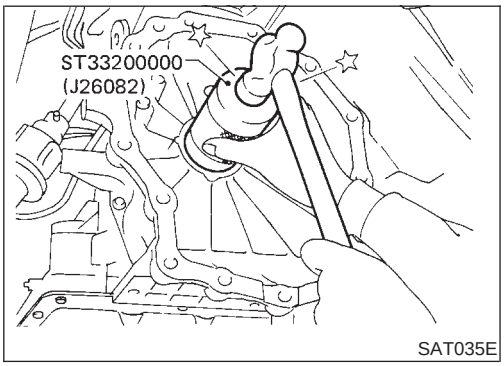

Rear Oil Seal Replacement

NBAT0102

1. Remove transfer case from vehicle. Refer to TF-117, “Removal”.
2. Remove rear oil seal.
3. Install rear oil seal.

- **Apply ATF before installing.**

4. Reinstall any part removed.

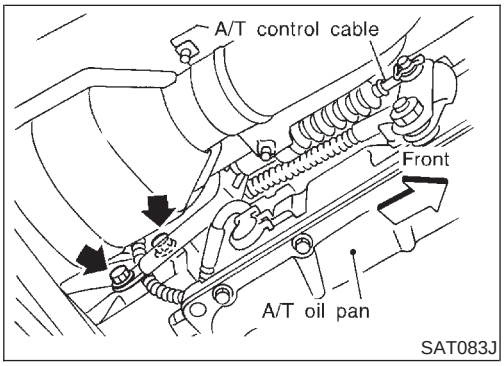

Parking Components Inspection

NBAT0103

1. Remove propeller shaft. Refer to PD-4, “Components”.
2. Remove transfer case from vehicle. Refer to TF-117, “Removal”.
3. Remove A/T control cable bracket from transmission case.

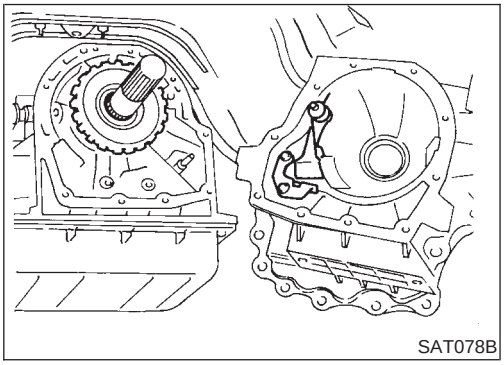

4. Support A/T assembly with a jack.
5. Remove adapter case from transmission case.
6. Replace parking components if necessary.
7. Reinstall any part removed.

- **Always use new sealing parts.**

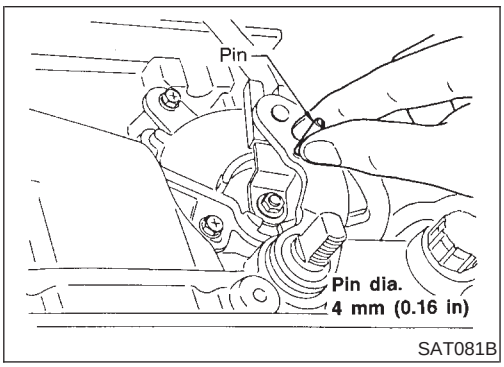

Park/Neutral Position Switch Adjustment

NBAT0104

1. Remove manual control linkage from manual shaft of A/T assembly.
2. Set manual shaft of A/T assembly in “N” position.
3. Loosen PNP switch fixing bolts.
4. Insert pin into adjustment holes in both PNP switch and manual shaft of A/T assembly as near vertical as possible.
5. Reinstall any part removed.
6. Check continuity of PNP switch. Refer to “Components Inspection”, AT-104.

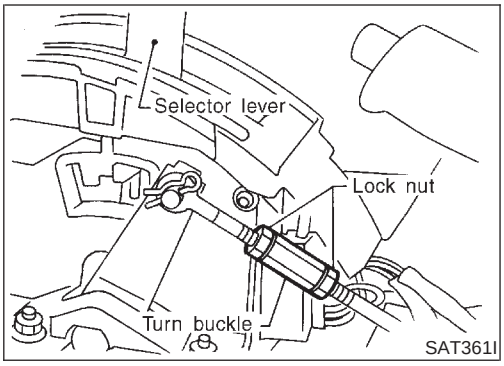

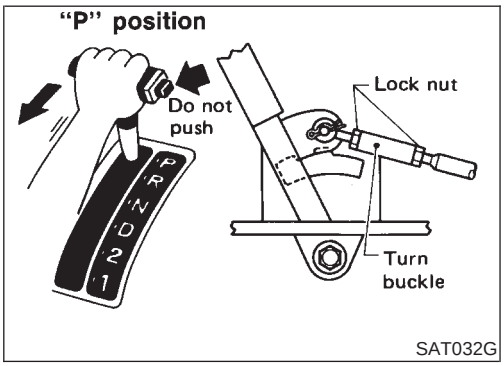

Manual Control Linkage Adjustment

NBAT0105

Move selector lever from "P" position to "1" position. You should be able to feel the detents in each position.
If the detents cannot be felt or the pointer indicating the position is improperly aligned, the linkage needs adjustment.

1. Place selector lever in "P" position.
2. Loosen lock nuts.
3. Tighten turn buckle until aligns with inner cable, pulling selector lever toward "R" position side without pushing button.
4. Back off turn buckle 1 turn and tighten lock nuts to the specified torque.

   Lock nut:

   : 4.4 - 5.9 N·m (0.45 - 0.60 kg-m, 39.1 - 52.1 in-lb)
5. Move selector lever from "P" position to "1" position. Make sure that selector lever can move smoothly.

Removal

NBAT0106

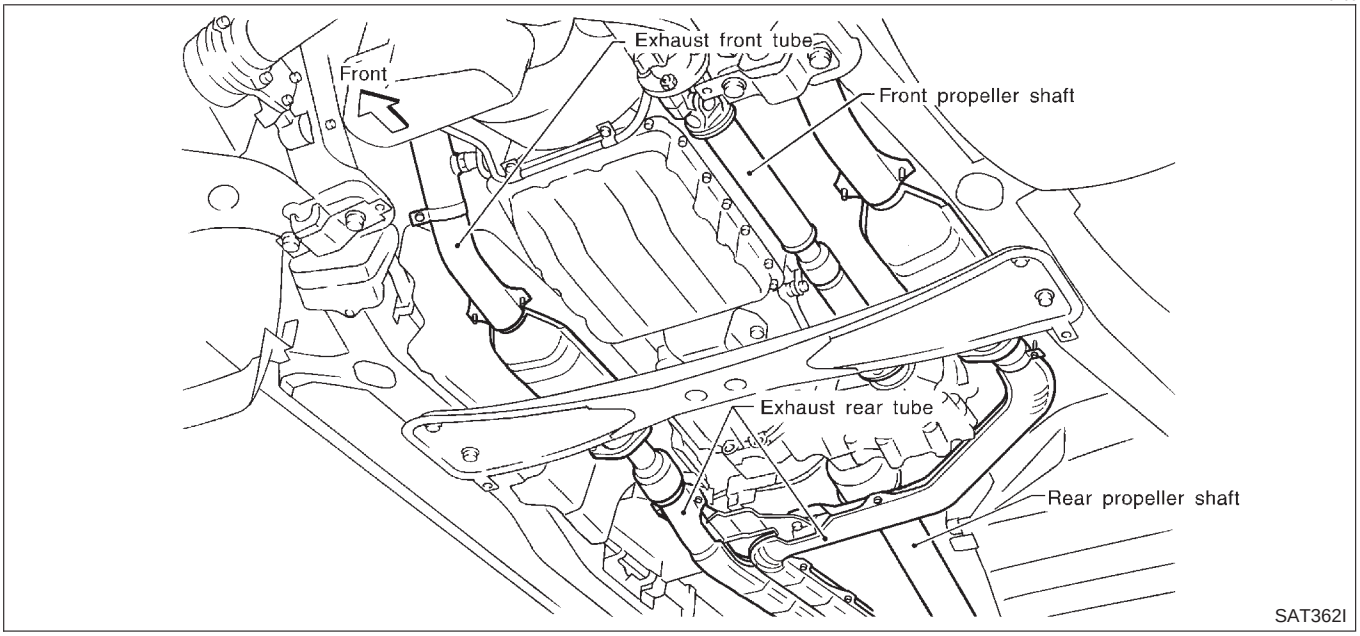

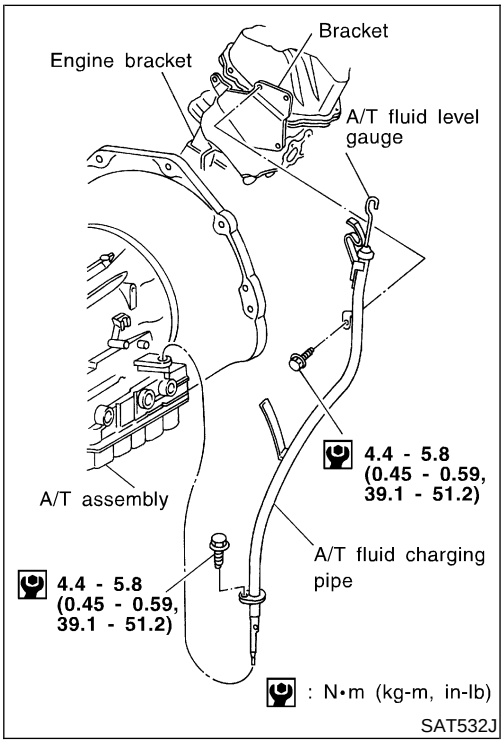

CAUTION:

When removing the A/T assembly from engine, first remove the crankshaft position sensor (OBD) from the A/T assembly upper side.

Be careful not to damage sensor edge.

1. Remove battery negative terminal.
2. Remove exhaust front and rear tubes.
3. Remove fluid charging pipe from A/T assembly.
4. Remove fluid cooler pipe from A/T assembly.
5. Plug up openings such as the fluid charging pipe hole, etc.
6. Remove front and rear propeller shaft. Refer to PD-4, “Components”.
7. Remove transfer control linkage from transfer. Refer to TF-117, “Removal”.

- **Insert plug into rear oil seal after removing rear propeller shaft.**
- **Be careful not to damage spline, sleeve yoke and rear oil seal.**

8. Remove A/T control cable from A/T assembly.
9. Disconnect A/T and speedometer sensor harness connectors.

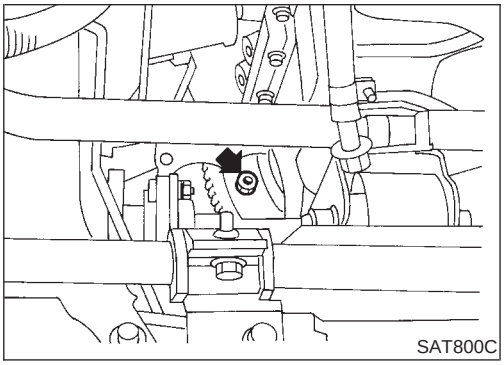

10. Remove starter motor. Refer to SC-8, “Removal and Installation”.
11. Remove gusset and rear plate cover securing engine to A/T assembly.
12. Remove bolts securing torque converter to drive plate.

- **Remove the bolts by turning crankshaft.**

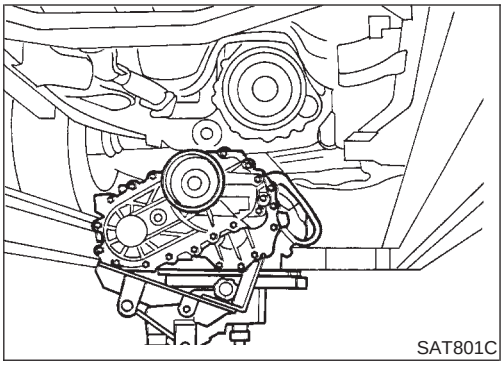

13. Support A/T and transfer assembly with a jack.
14. Remove rear engine mounting member from body and A/T assembly. Tighten rear engine mounting member to the specified torque. Refer to EM-44, "Rear Engine Mounting".
15. Remove bolts securing A/T assembly to engine.
16. Lower A/T assembly with transfer.

Installation

NBAT0107

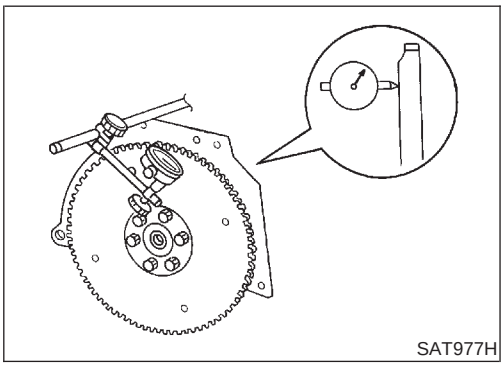

- Drive plate runout

  Maximum allowable runout:

  Refer to EM-54, "DRIVE PLATE RUNOUT".

  If this runout is out of specification, replace drive plate with ring gear.

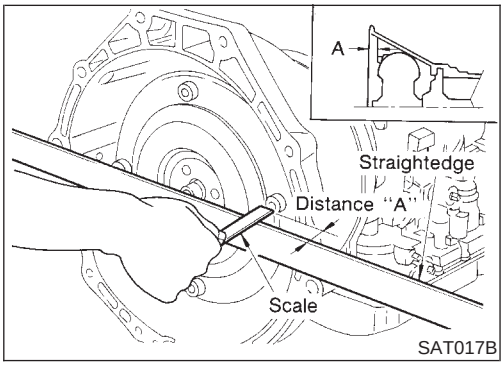

- When connecting torque converter to transmission, measure distance "A" to be certain that they are correctly assembled.

  Distance "A":

  26.0 mm (1.024 in) or more

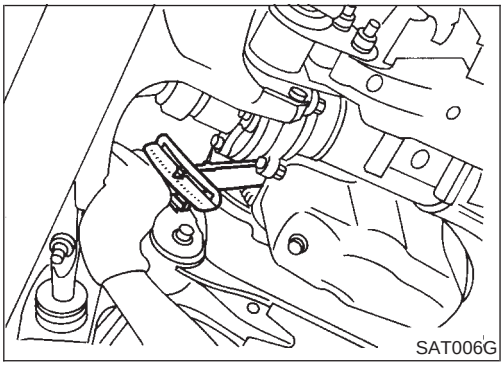

- Install converter to drive plate.
- **After converter is installed to drive plate, rotate crankshaft several turns and check to be sure that transmission rotates freely without binding.**

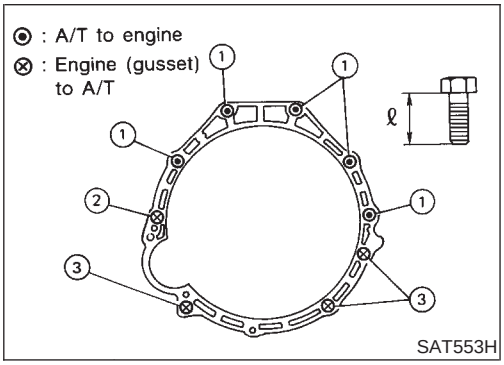

- Tighten bolts securing transmission.

Bolt No.	Tightening torque N·m (kg-m, ft-lb)	Bolt length "ℓ" mm (in)
1	39 - 49 (4.0 - 5.0, 29 - 36)	47.5 (1.870)
2	39 - 49 (4.0 - 5.0, 29 - 36)	58.0 (2.283)
3	29 - 39 (3.0 - 4.0, 22 - 29)	25.0 (0.984)
Gusset to engine	29 - 39 (3.0 - 4.0, 22 - 29)	20.0 (0.787)

- Reinstall any part removed.

- Check fluid level in transmission.
- Move selector lever through all positions to be sure that transmission operates correctly.
  With parking brake applied, rotate engine at idling. Move selector lever through "N" to "D", to "2", to "1" and to "R" positions. A slight shock should be felt by hand gripping selector each time transmission is shifted.
- Perform road test. Refer to "ROAD TEST", AT-63.

AIR BREATHER HOSE

NBAT0107S01

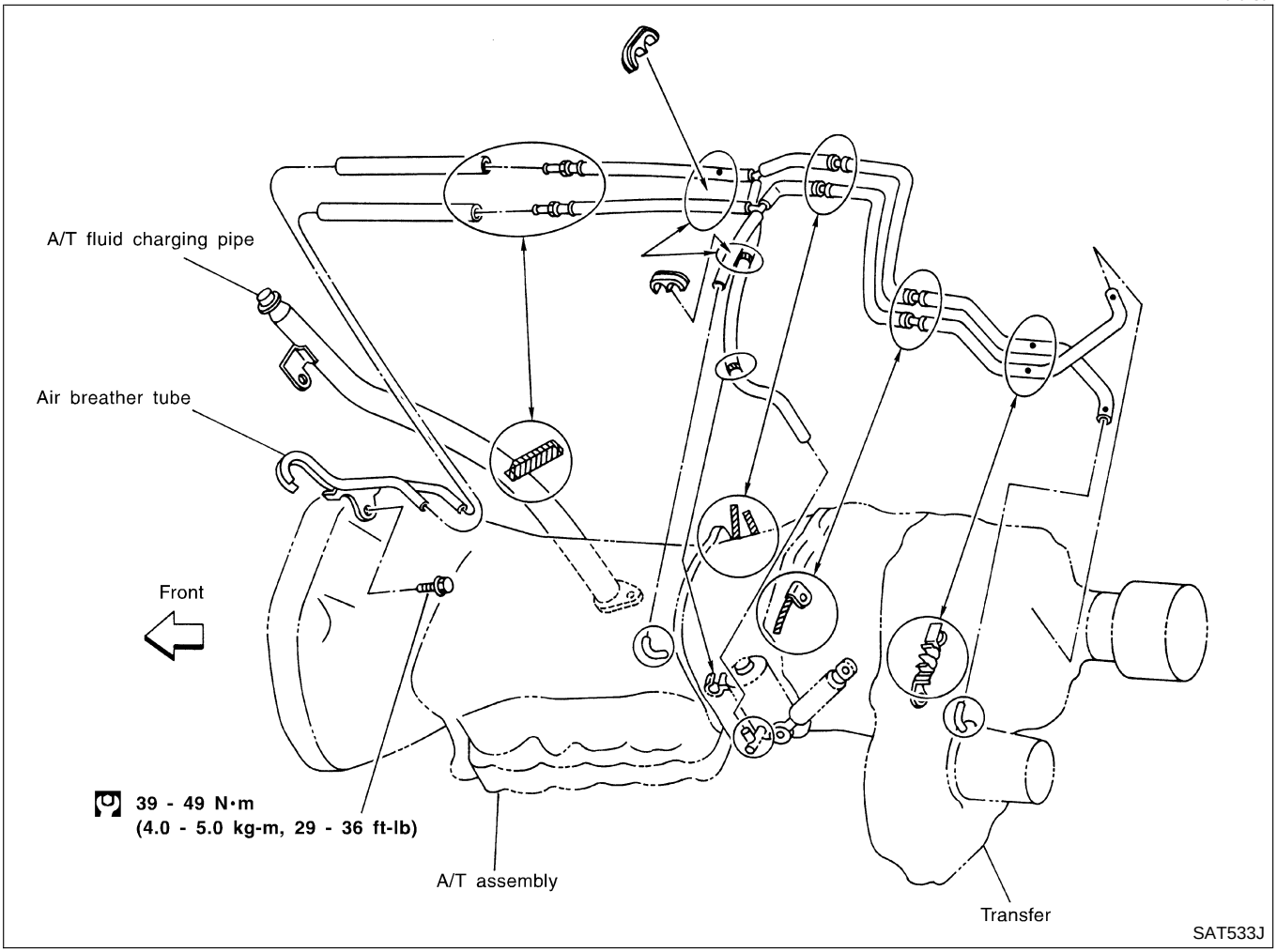

Components

NBAT0108

SEC. 311•313•315

: N•m (kg-m, ft-lb)

: Apply recommended sealant (Genuine anaerobic liquid gasket, Three Bond TB1215, Locktite Part No. 5183 or equivalent).

ATF : Apply ATF.

P : Apply petroleum jelly.

★ : Select with proper thickness.

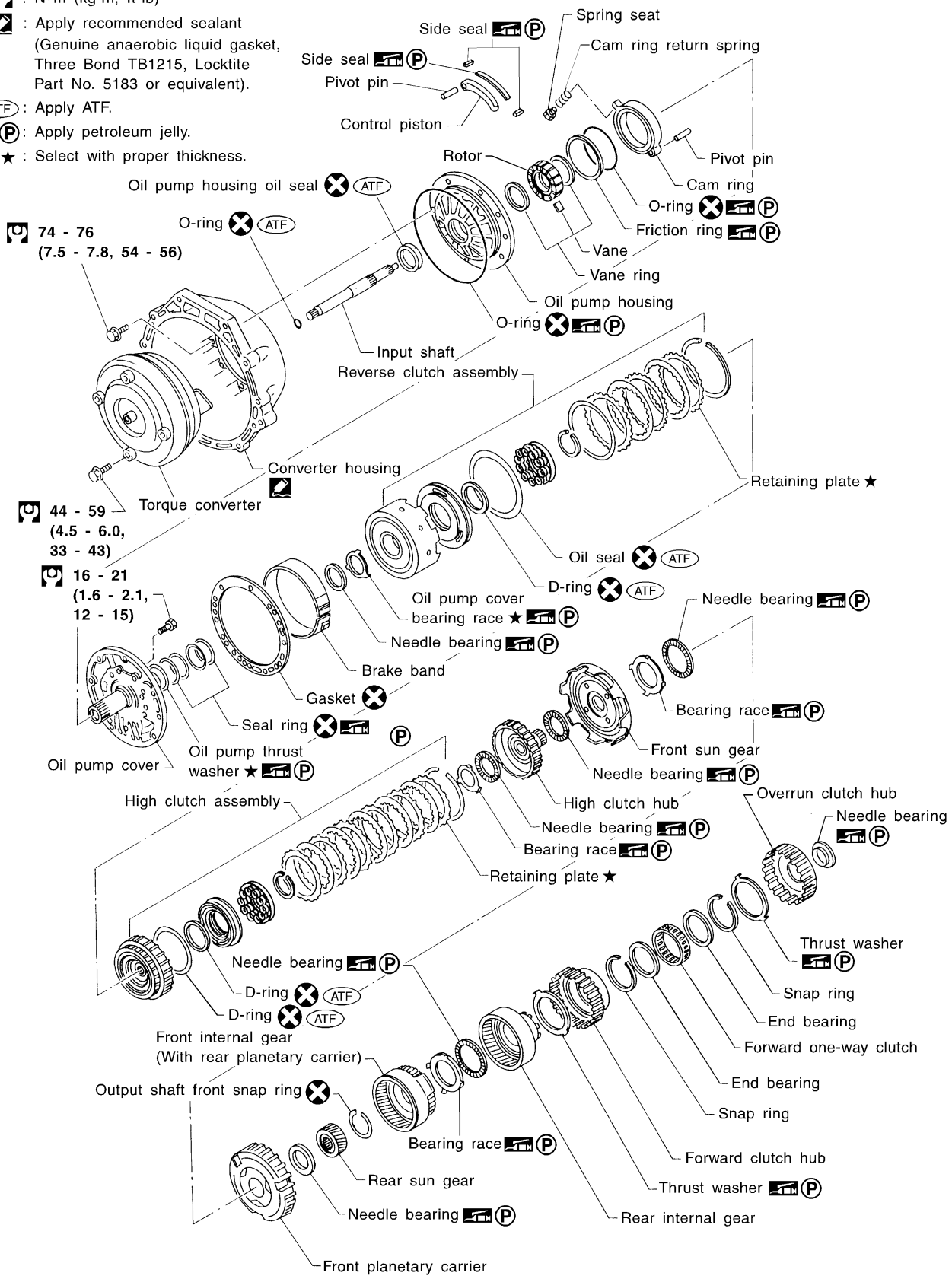

SAT147JA

SEC. 311•315•317

: N•m (kg-m, in-lb)
: N•m (kg-m, ft-lb)
ATF : Apply ATF.
Ⓟ : Apply petroleum jelly.
★ : Select with proper thickness.
☆ : Adjustment is required.

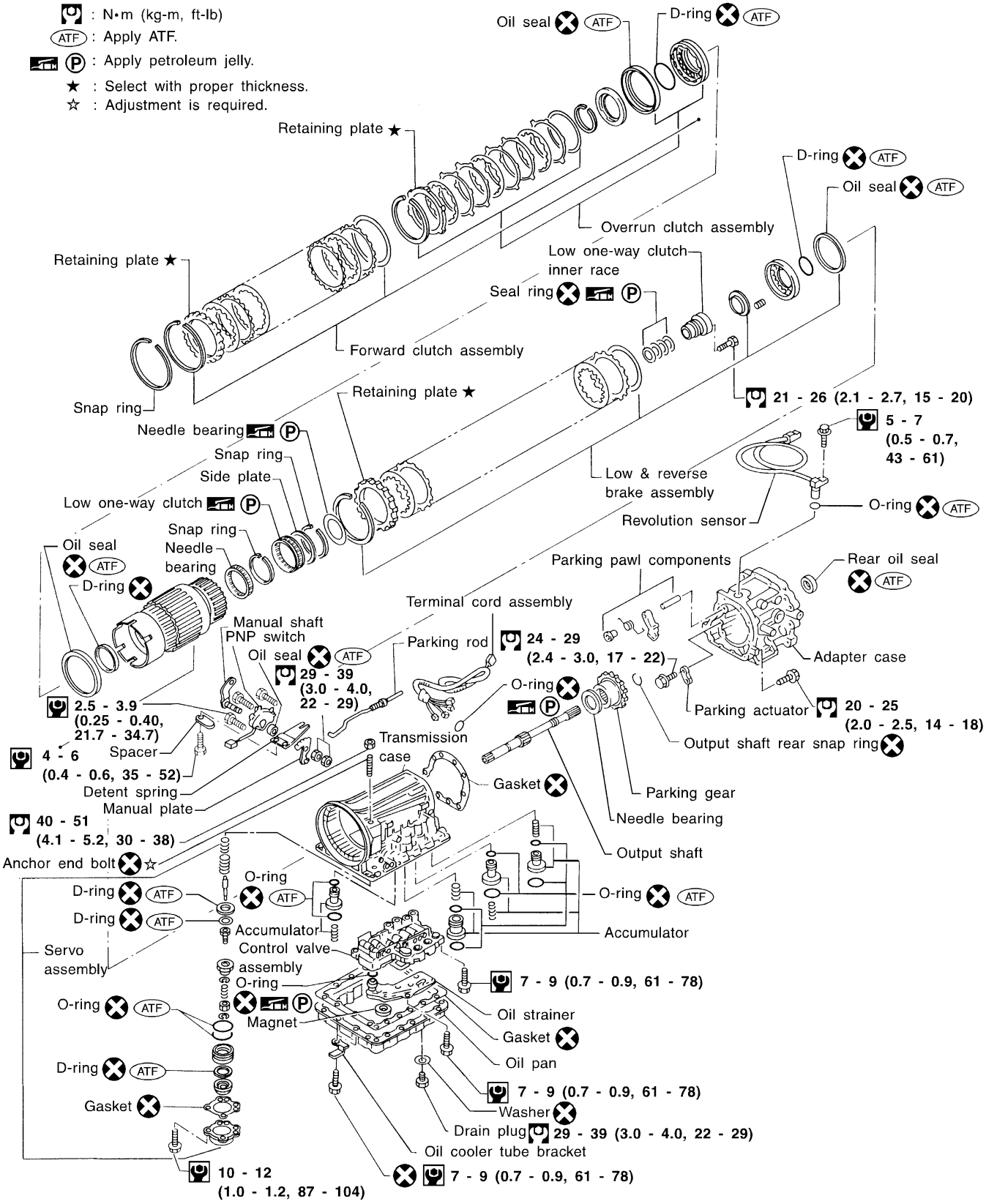

SAT752IA

Oil Channel

NBAT0109

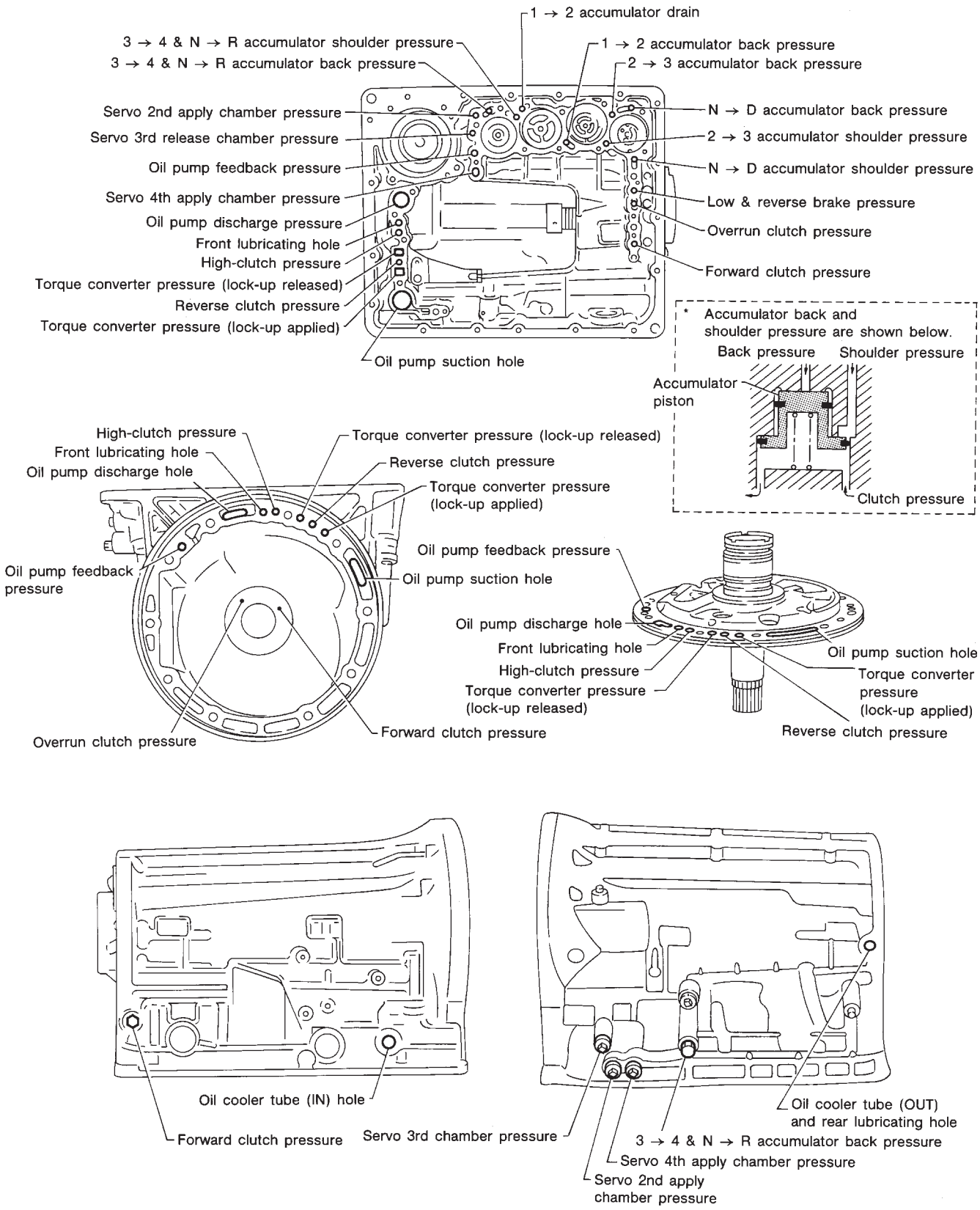

SAT185B

Locations of Needle Bearings, Thrust Washers and Snap Rings

NBAT0110

Outer diameter of snap rings

Item number	Outer diameter mm (in)
2	161.0 (6.34)
3	140.1 (5.52)
4	156.4 (6.16)
6	142.0 (5.59)
7	159.2 (6.27)

Thrust washers

Item number	Color
1	Black
5	White

Outer diameter of needle bearings

Item number	Outer diameter mm (in)
8	47 (1.85)
9	53 (2.09)
11	78 (3.07)
12	53 (2.09)
13	78 (3.07)
14	59 (2.32)
15	78 (3.07)
16	64 (2.52)
17	53 (2.09)

Inner diameter of bearing races

Item number	Outer diameter mm (in)
11	58.8 (2.315)
13	58.8 (2.315)

Installation of one-piece bearings

Item number	Bearing race (black) location
10	Front
12	Front
15	Rear side
16	Rear side

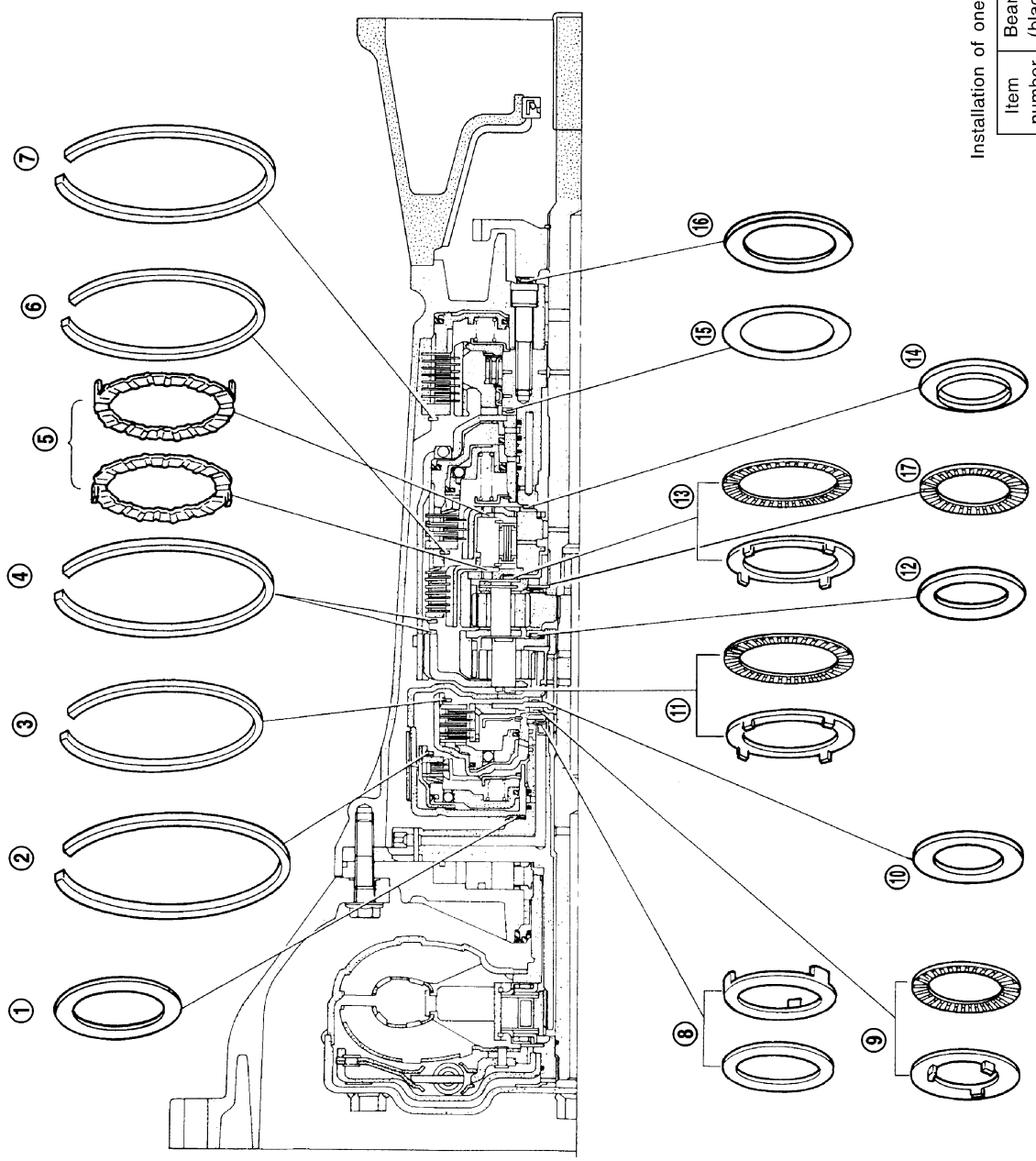

SAT140J

DISASSEMBLY

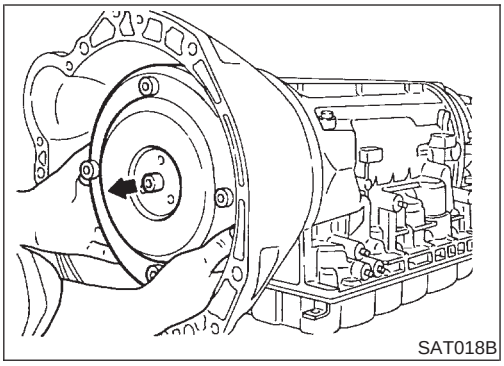
SAT018B

1. Drain ATF through drain plug.
2. Remove torque converter by holding it firmly and turning while pulling straight out.

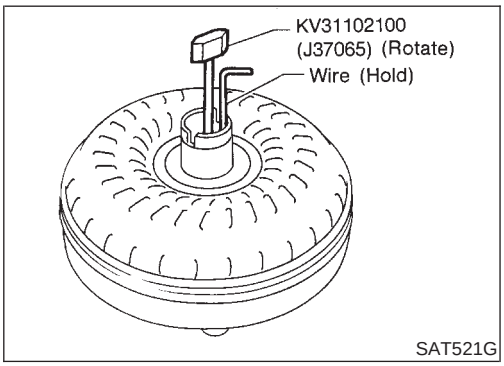

SAT521G

3. Check torque converter one-way clutch.
a. Insert Tool into spline of one-way clutch inner race.
b. Hook bearing support unitized with one-way clutch outer race with suitable wire.
c. Check that one-way clutch inner race rotates only clockwise with Tool while holding bearing support with wire.

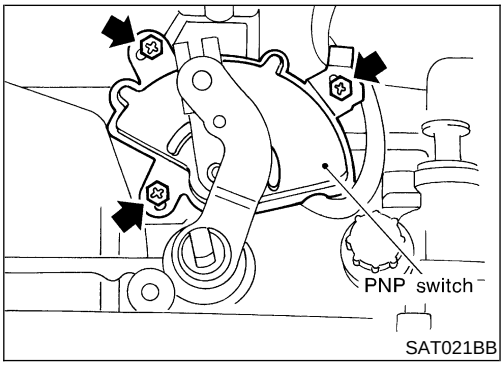

SAT021BB

4. Remove PNP switch from transmission case.

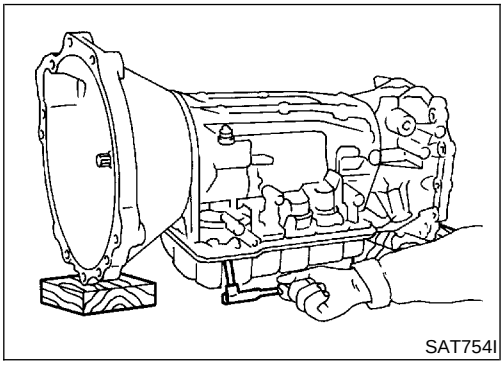
SAT754I

5. Remove oil pan.
- Always place oil pan straight down so that foreign particles inside will not move.

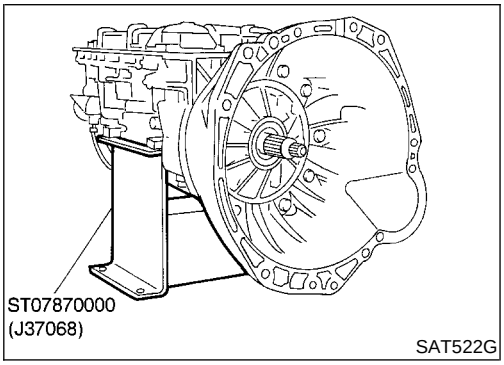

SAT522G

6. Place transmission into Tool with the control valve facing up.

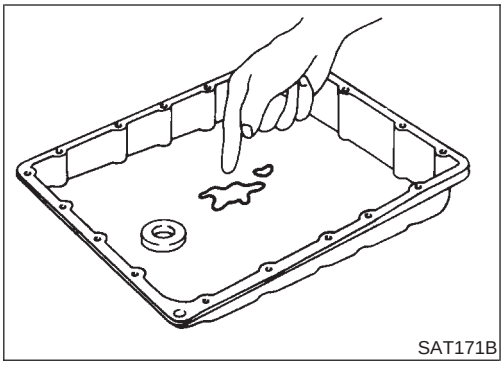
SAT171B

7. Check foreign materials in oil pan to help determine cause of malfunction. If the fluid is very dark, smells burned, or contains foreign particles, the frictional material (clutches, band) may need replacement. A tacky film that will not wipe clean indicates varnish build up. Varnish can cause valves, servo, and clutches to stick and may inhibit pump pressure.

- **If frictional material is detected, replace radiator after repair of A/T. Refer to LC-12, "REMOVAL AND INSTALLATION".**

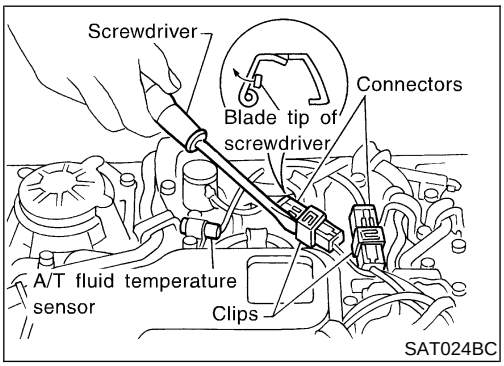

SAT024BC

8. Remove torque converter clutch solenoid valve and A/T fluid temperature sensor connectors.

- **Be careful not to damage connector.**

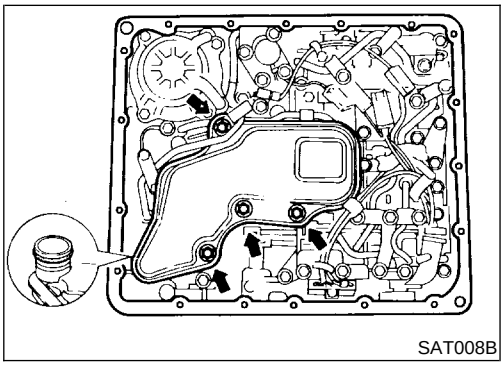
SAT008B

9. Remove oil strainer.

a. Remove oil strainer from control valve assembly. Then remove O-ring from oil strainer.

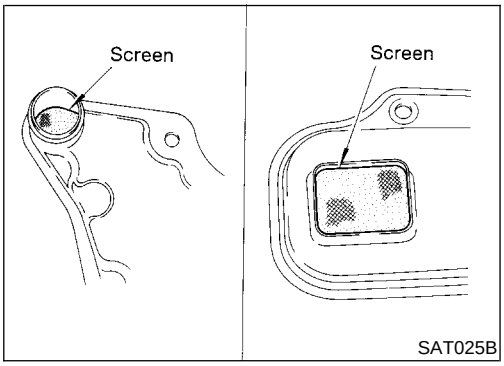

SAT025B

b. Check oil strainer screen for damage.

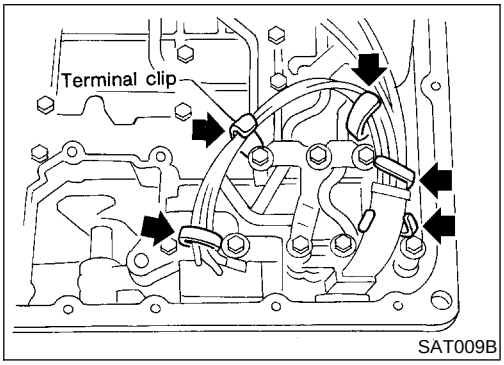

SAT009B

10. Remove control valve assembly.

a. Straighten terminal clips to free terminal cords then remove terminal clips.

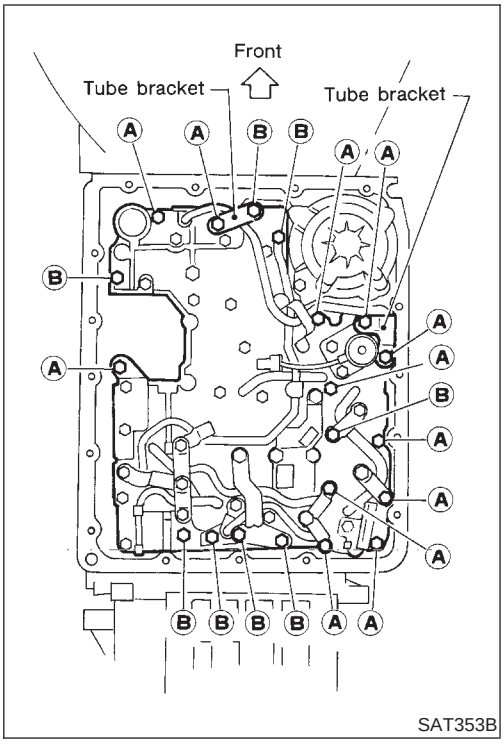

SAT353B

b. Remove bolts A and B, and remove control valve assembly from transmission.

Bolt symbol	Length mm (in)
A	33 (1.30)
B	45 (1.77)

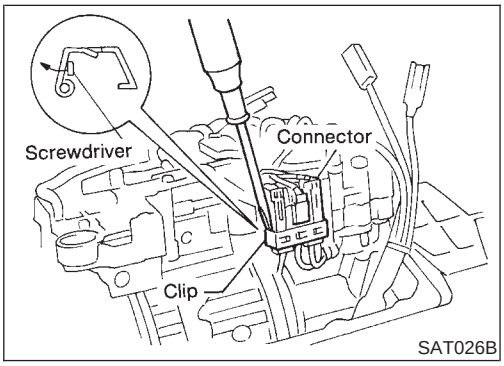

SAT026B

c. Remove solenoid connector.

- **Be careful not to damage connector.**

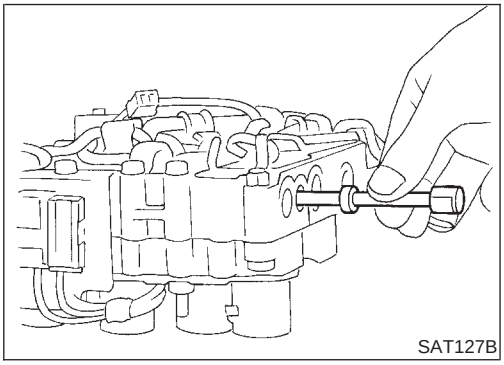
SAT127B

d. Remove manual valve from control valve assembly.

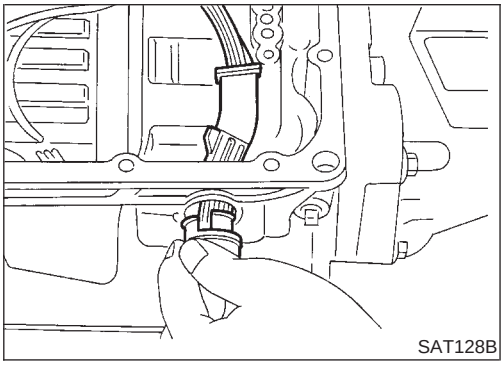
SAT128B

11. Remove terminal cord assembly from transmission case while pushing on stopper.

- **Be careful not to damage cord.**
- **Do not remove terminal cord assembly unless it is damaged.**

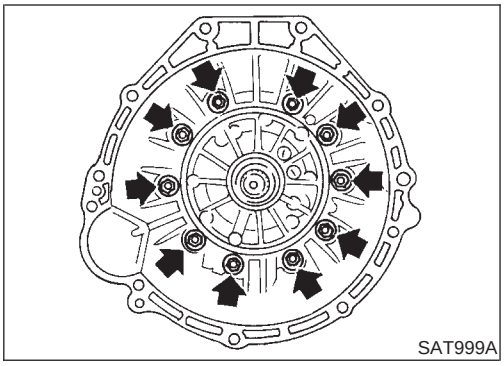

12. Remove converter housing from transmission case.
- **Be careful not to scratch converter housing.**

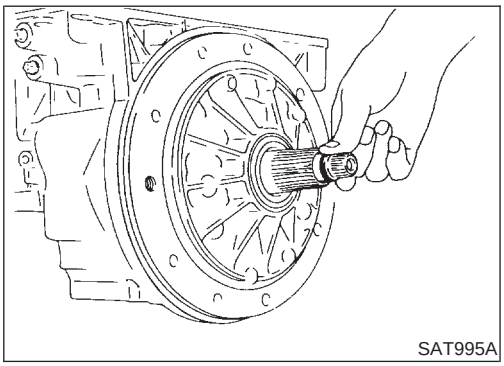

13. Remove O-ring from input shaft.

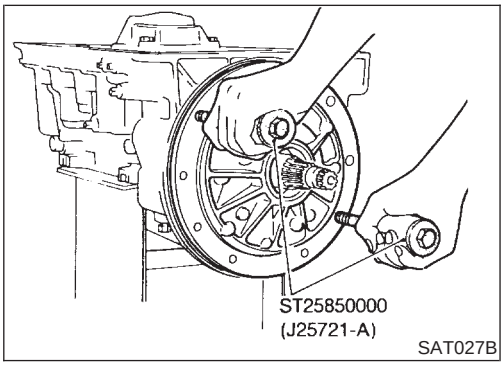

14. Remove oil pump assembly.

a. Attach Tool to oil pump assembly and extract it evenly from transmission case.

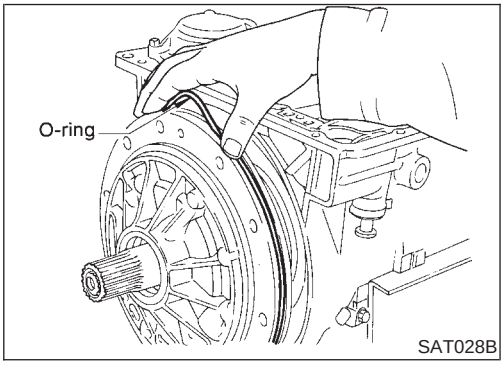

b. Remove O-ring from oil pump assembly.

c. Remove traces of sealant from oil pump housing.
- **Be careful not to scratch pump housing.**

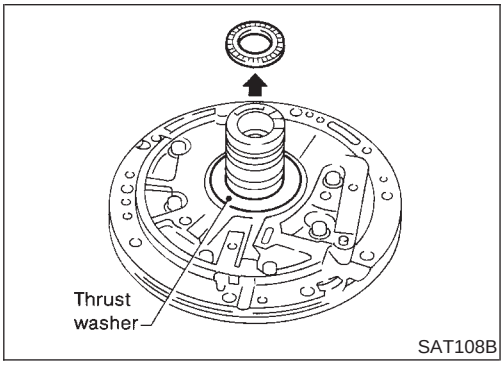

d. Remove needle bearing and thrust washer from oil pump assembly.

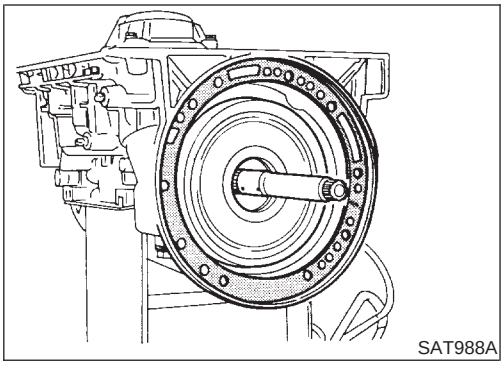
SAT988A

15. Remove input shaft and oil pump gasket.

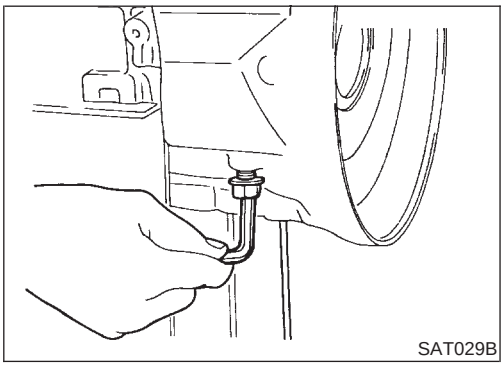
SAT029B

16. Remove brake band and band strut.
a. Loosen lock nut and remove band servo anchor end pin from transmission case.

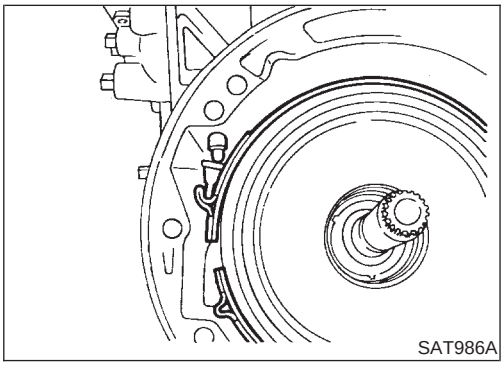
SAT986A

b. Remove brake band and band strut from transmission case.

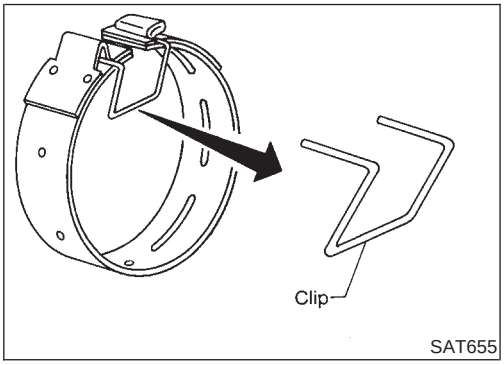

SAT655

c. Hold brake band in a circular shape with clip.

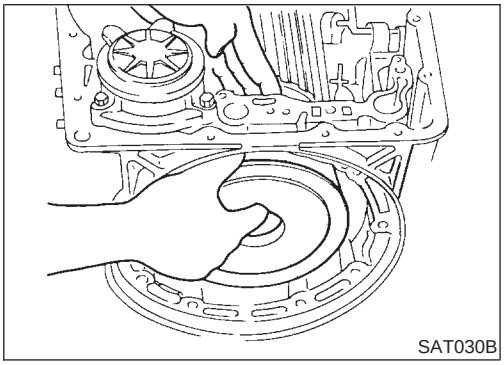
SAT030B

17. Remove front side clutch and gear components.
a. Remove clutch pack (reverse clutch, high clutch and front sun gear) from transmission case.

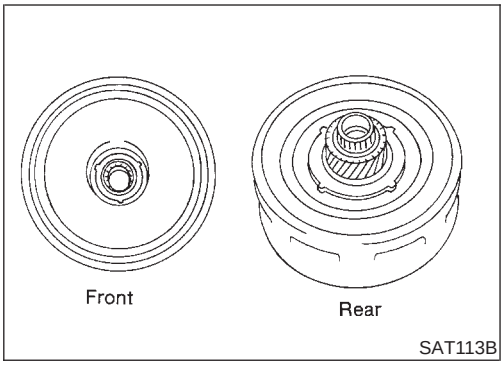

b. Remove front bearing race from clutch pack.
c. Remove rear bearing race from clutch pack.

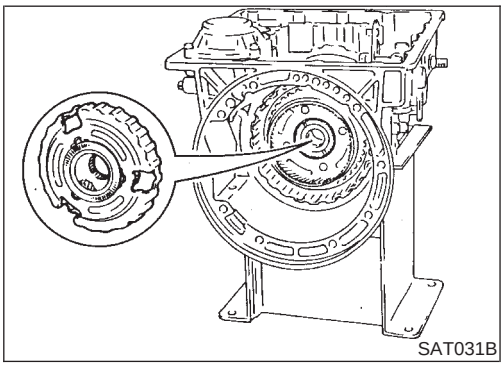

d. Remove front planetary carrier from transmission case.

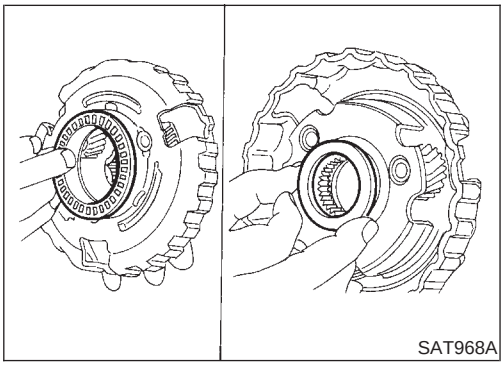

e. Remove front needle bearing from front planetary carrier.
f. Remove rear bearing from front planetary carrier.

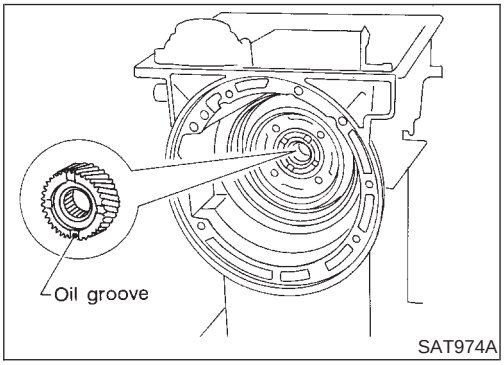

g. Remove rear sun gear from transmission case.

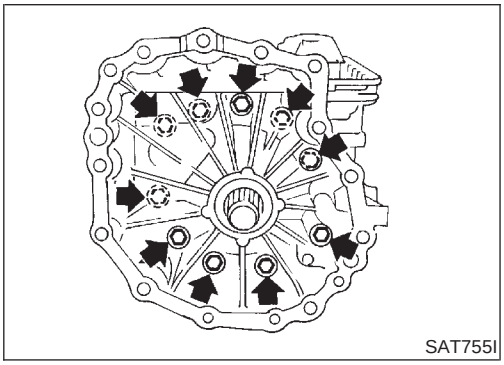

18. Remove adapter case.
a. Remove adapter case from transmission case.
b. Remove adapter case gasket from transmission case.

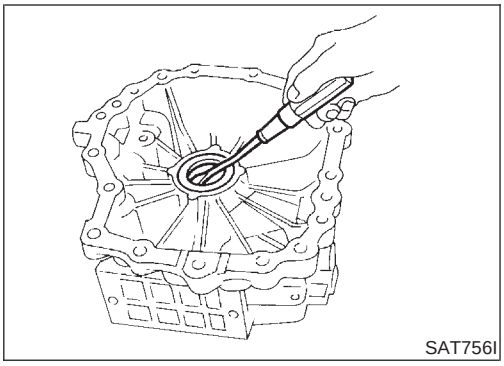
SAT756I

c. Remove oil seal from adapter case.
- **Do not remove oil seal unless it is to be replaced.**

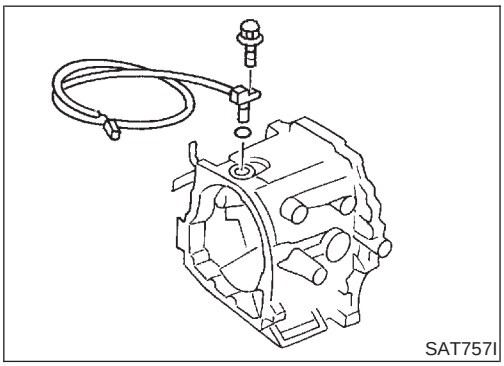
SAT757I

d. Remove revolution sensor from adapter case.
e. Remove O-ring from revolution sensor.

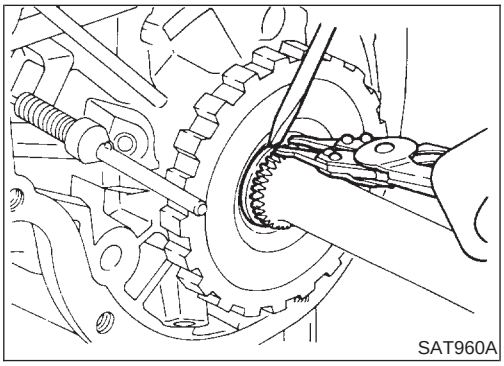
SAT960A

19. Remove output shaft and parking gear.
a. Remove rear snap ring from output shaft.

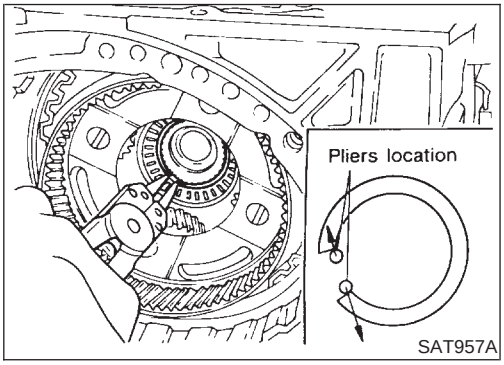

SAT957A

b. Slowly push output shaft all the way forward.
- **Do not use excessive force.**

c. Remove snap ring from output shaft.

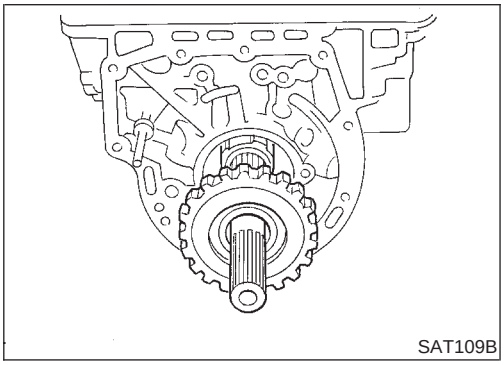
SAT109B

d. Remove output shaft and parking gear as a unit from transmission case.
e. Remove parking gear from output shaft.

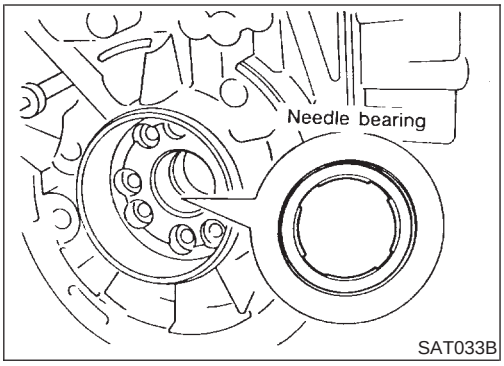

SAT033B

f. Remove needle bearing from transmission case.

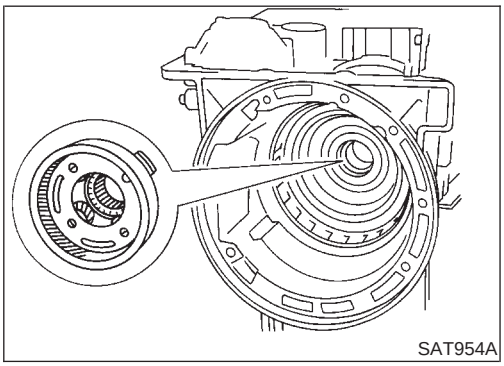
SAT954A

20. Remove rear side clutch and gear components.

a. Remove front internal gear.

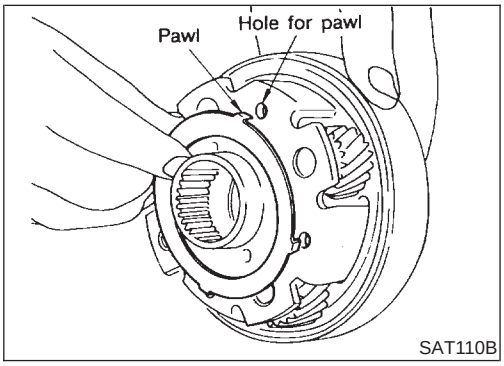

SAT110B

b. Remove bearing race from front internal gear.

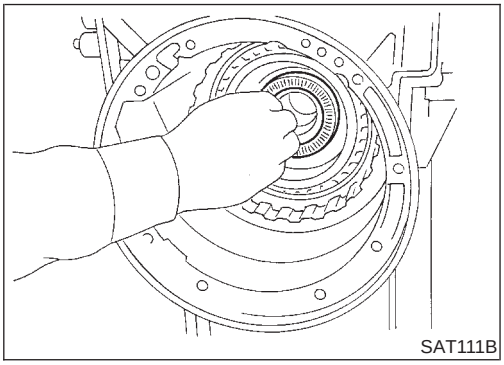
SAT111B

c. Remove needle bearing from rear internal gear.

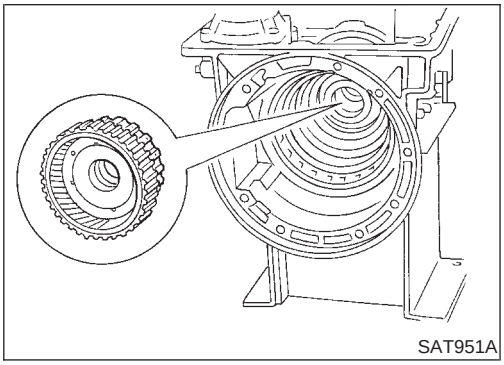
SAT951A

d. Remove rear internal gear, forward clutch hub and overrun clutch hub as a set from transmission case.

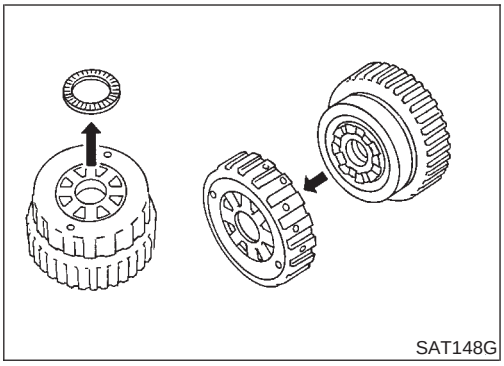
SAT148G

e. Remove needle bearing from overrun clutch hub.
f. Remove overrun clutch hub from rear internal gear and forward clutch hub.

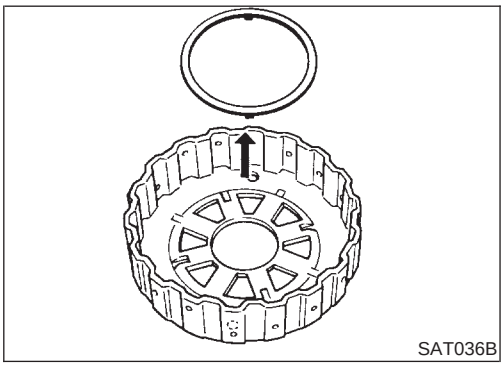
SAT036B

g. Remove thrust washer from overrun clutch hub.

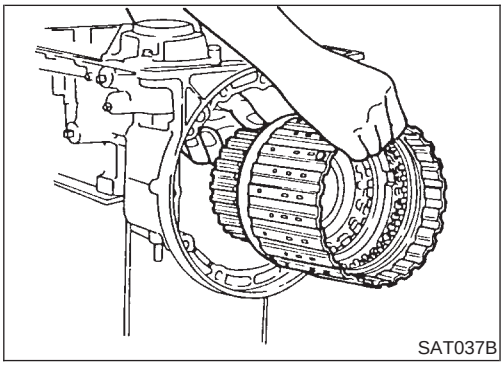
SAT037B

h. Remove forward clutch assembly from transmission case.

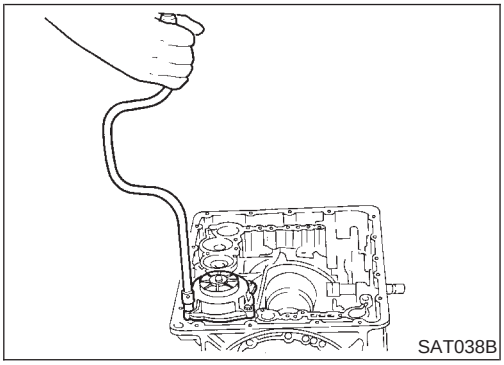
SAT038B

21. Remove band servo and accumulator components.
a. Remove band servo retainer from transmission case.

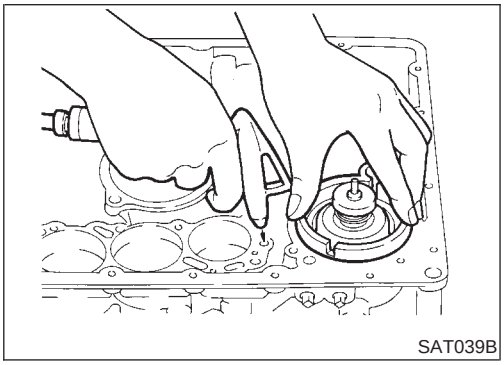
SAT039B

b. Apply compressed air to oil hole until band servo piston comes out of transmission case.
- **Hold piston with a rag and gradually direct air to oil hole.**

c. Remove return springs.

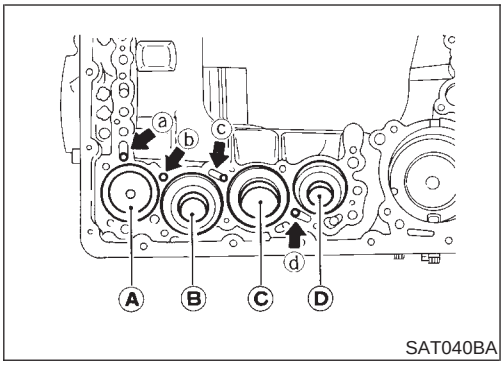

SAT040BA

d. Remove springs from accumulator pistons B, C and D.
e. Apply compressed air to each oil hole until piston comes out.
- **Hold piston with a rag and gradually direct air to oil hole.**

Identification of accumulator pistons	A	B	C	D
Identification of oil holes	a	b	c	d

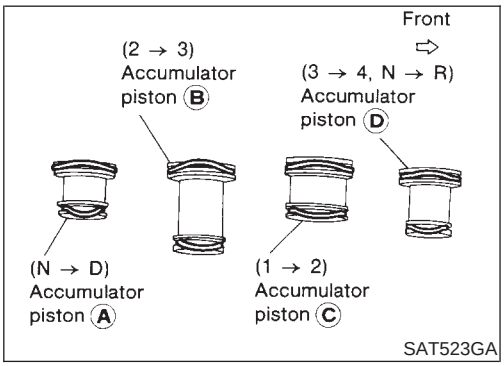

SAT523GA

f. Remove O-ring from each piston.

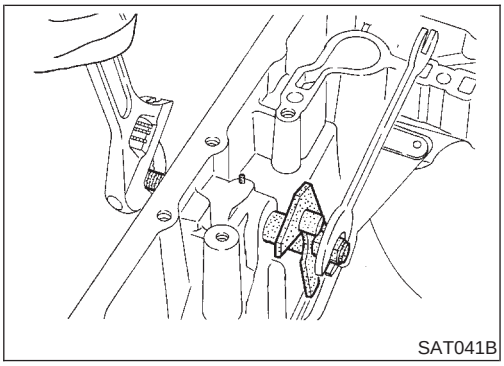
SAT041B

22. Remove manual shaft components, if necessary.
a. Hold width across flats of manual shaft (outside the transmission case) and remove lock nut from shaft.

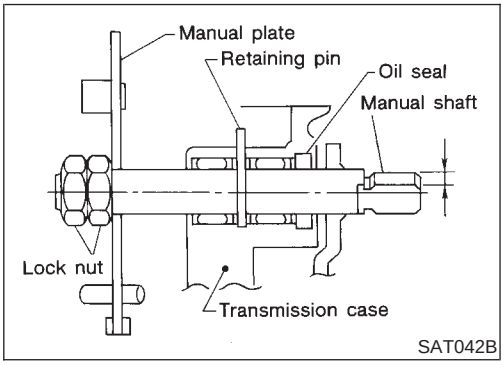

SAT042B

b. Remove retaining pin from transmission case.

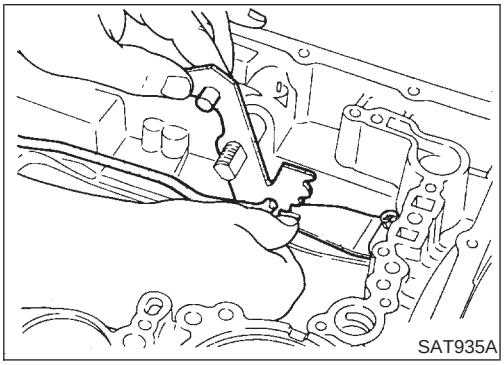
SAT935A

c. While pushing detent spring down, remove manual plate and parking rod from transmission case.

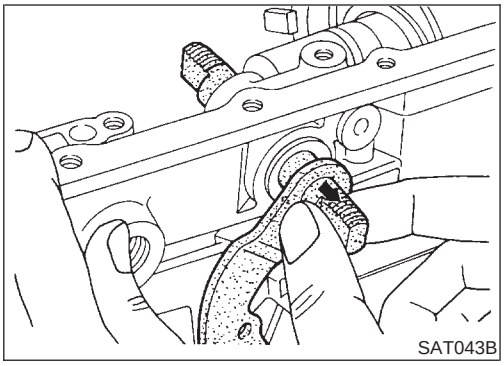

d. Remove manual shaft from transmission case.

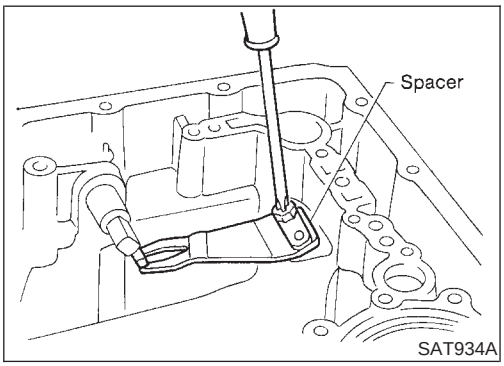

e. Remove spacer and detent spring from transmission case.

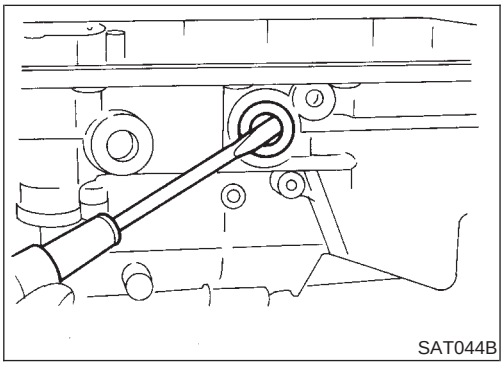

f. Remove oil seal from transmission case.

Oil Pump

COMPONENTS

NBAT0112

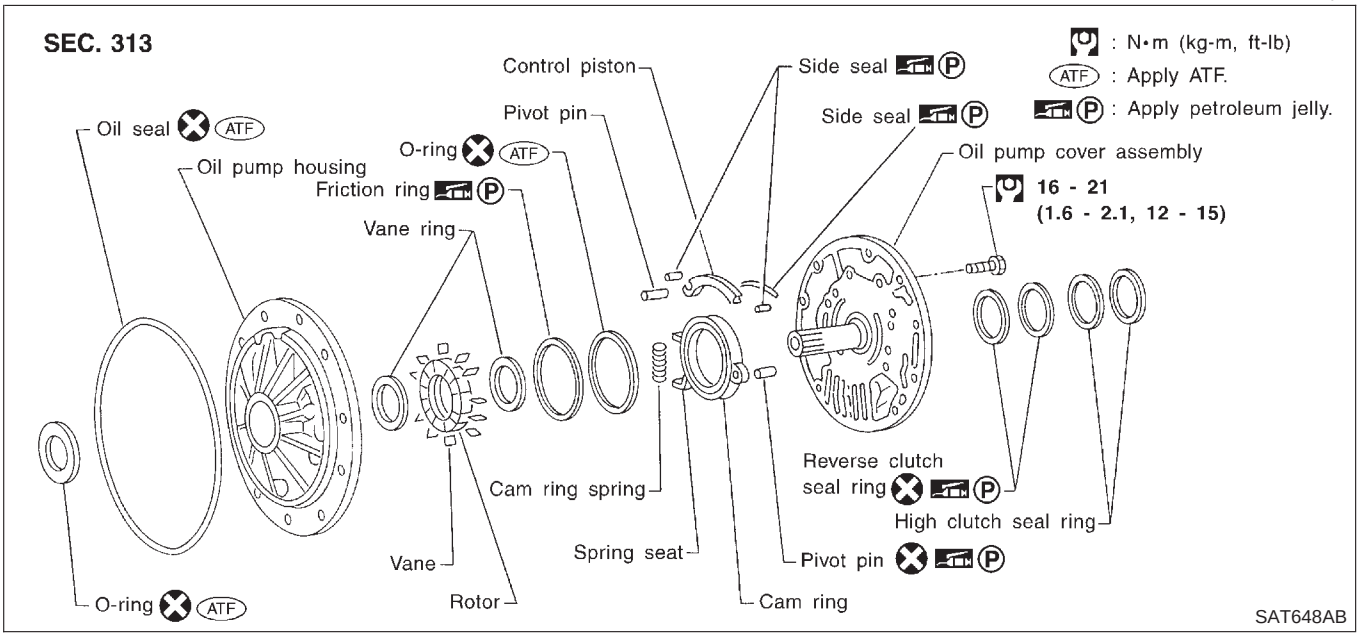

DISASSEMBLY

NBAT0113

1. Loosen bolts in numerical order and remove oil pump cover.

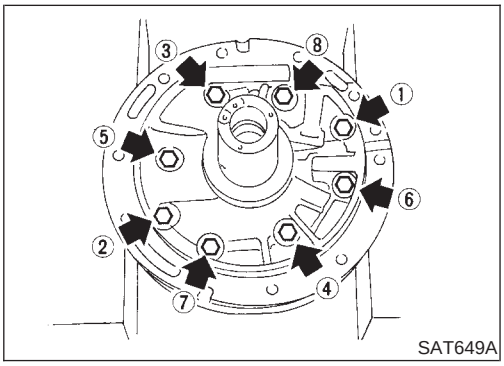

2. Remove rotor, vane rings and vanes.

- **Inscribe a mark on back of rotor for identification of fore-aft direction when reassembling rotor. Then remove rotor.**

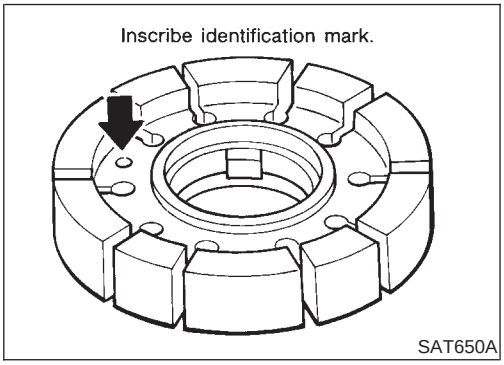

3. While pushing on cam ring remove pivot pin.

- **Be careful not to scratch oil pump housing.**

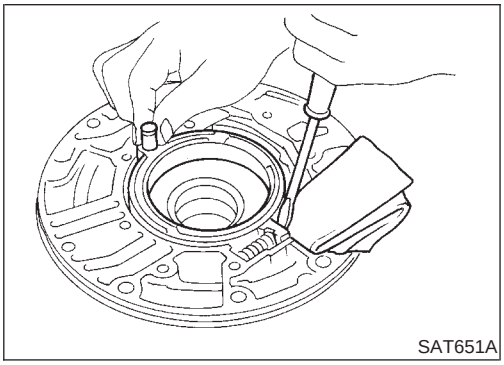

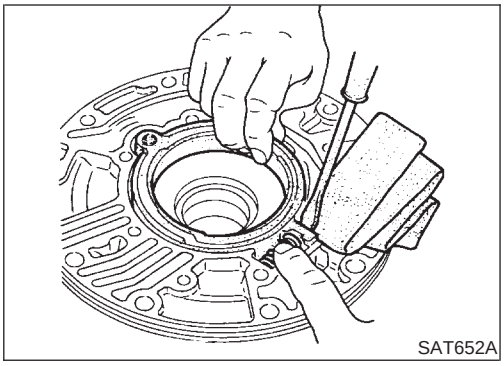
SAT652A

4. While holding cam ring and spring lift out cam ring spring.
- **Be careful not to damage oil pump housing.**
- **Hold cam ring spring to prevent it from jumping.**

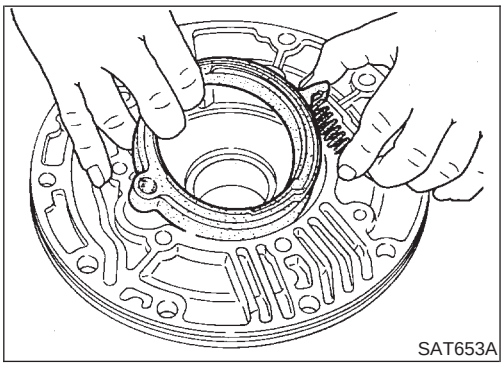
SAT653A

5. Remove cam ring and cam ring spring from oil pump housing.

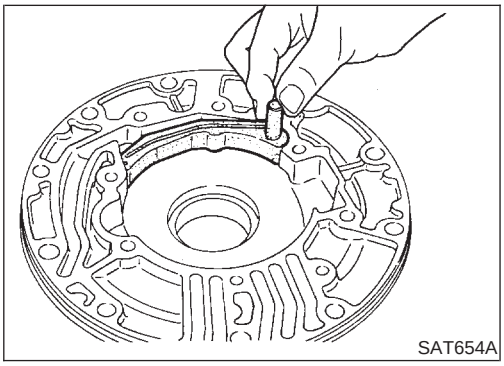
SAT654A

6. Remove pivot pin from control piston and remove control piston assembly.

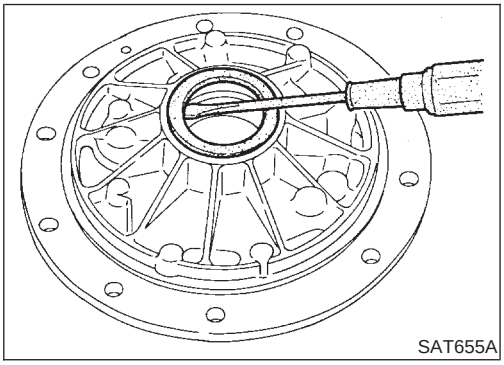
SAT655A

7. Remove oil seal from oil pump housing.
- **Be careful not to scratch oil pump housing.**

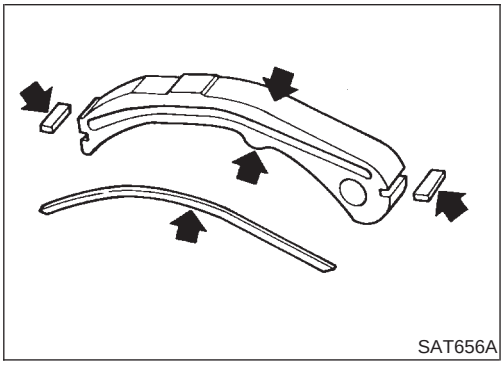
SAT656A

INSPECTION

NBAT0114

Oil Pump Cover, Rotor, Vanes, Control Piston, Side Seals, Cam Ring and Friction Ring

NBAT0114S01

- Check for wear or damage.

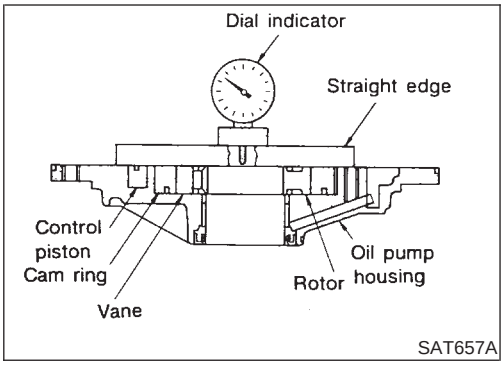

Side Clearances

NBAT0114S02

- Measure side clearances between end of oil pump housing and cam ring, rotor, vanes and control piston. Measure in at least four places along their circumferences. Maximum measured values should be within specified positions.
- **Before measurement, check that friction rings, O-ring, control piston side seals and cam ring spring are removed.**

  Standard clearance (Cam ring, rotor, vanes and control piston):

  Refer to SDS, AT-343.
- If not within standard clearance, replace oil pump assembly except oil pump cover assembly.

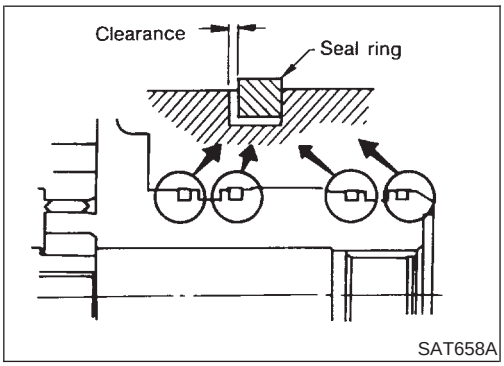

Seal Ring Clearance

NBAT0114S03

- Measure clearance between seal ring and ring groove.

  Standard clearance:

  0.10 - 0.25 mm (0.0039 - 0.0098 in)

  Wear limit:

  0.25 mm (0.0098 in)
- If not within wear limit, replace oil pump cover assembly.

ASSEMBLY

NBAT0115

1. Drive oil seal into oil pump housing.
- **Apply ATF to outer periphery and lip surface.**

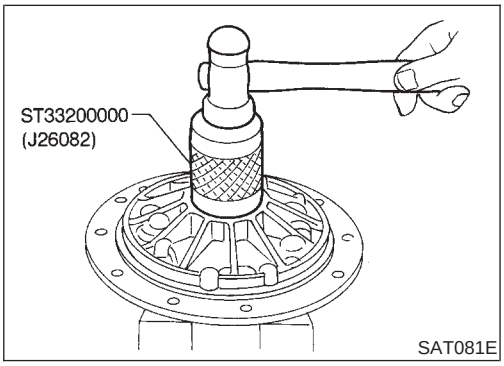

2. Install cam ring in oil pump housing by the following

a. Install side seal on control piston.
- **Pay attention to its direction — Black surface goes toward control piston.**
- **Apply petroleum jelly to side seal.**

b. Install control piston on oil pump.

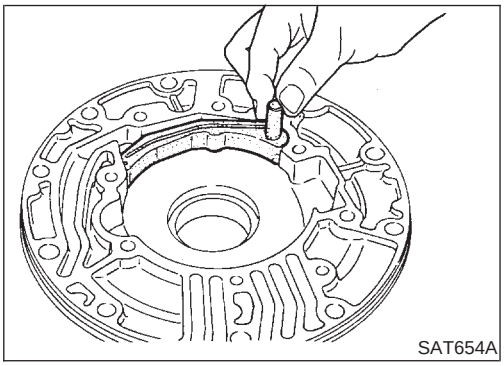

c. Install O-ring and friction ring on cam ring.
- **Apply petroleum jelly to O-ring.**

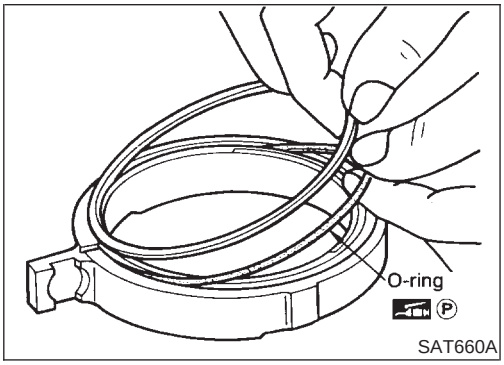

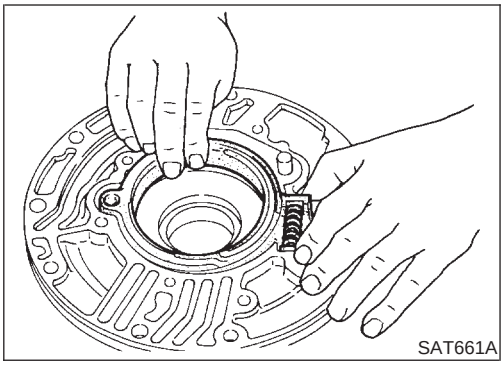
SAT661A

d. Assemble cam ring, cam ring spring and spring seat. Install spring by pushing it against pump housing.

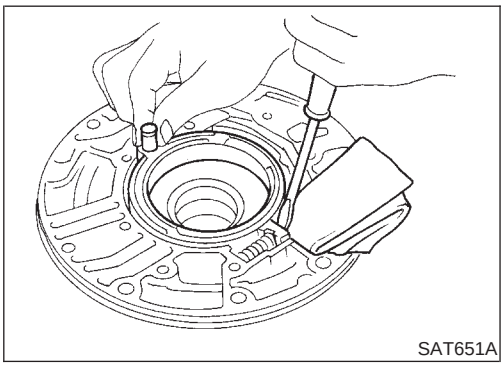
SAT651A

e. While pushing on cam ring install pivot pin.

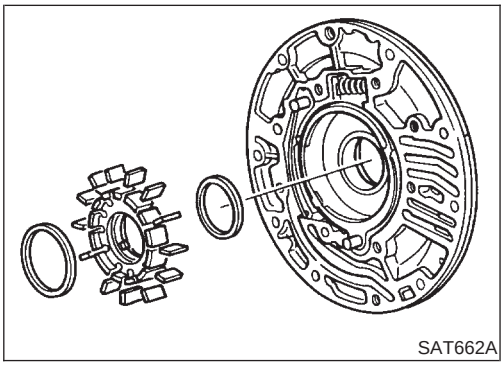
SAT662A

3. Install rotor, vanes and vane rings.

- **Pay attention to direction of rotor.**

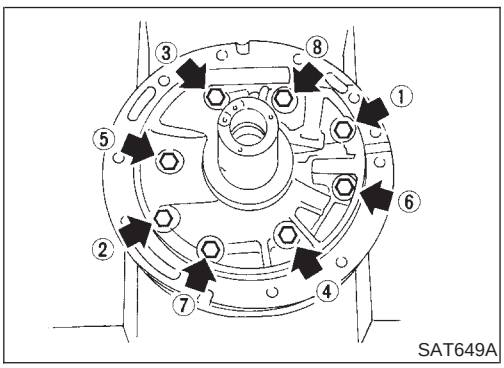

SAT649A

4. Install oil pump housing and oil pump cover.

a. Wrap masking tape around splines of oil pump cover assembly to protect seal. Position oil pump cover assembly in oil pump housing assembly, then remove masking tape.

b. Tighten bolts in a criss-cross pattern.

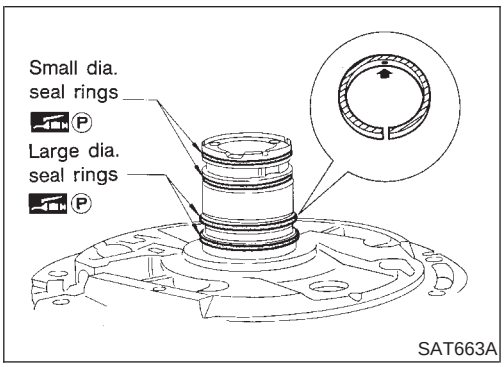

SAT663A

5. Install new seal rings carefully after packing ring grooves with petroleum jelly. Press rings down into jelly to a close fit.

- **Seal rings come in two different diameters. Check fit carefully in each groove.**

  Small dia. seal ring:

  No mark

  Large dia. seal ring:

  Yellow mark in area shown by arrow

- **Do not spread gap of seal ring excessively while installing. It may deform ring.**

Control Valve Assembly

COMPONENTS

NBAT0116

SEC. 317

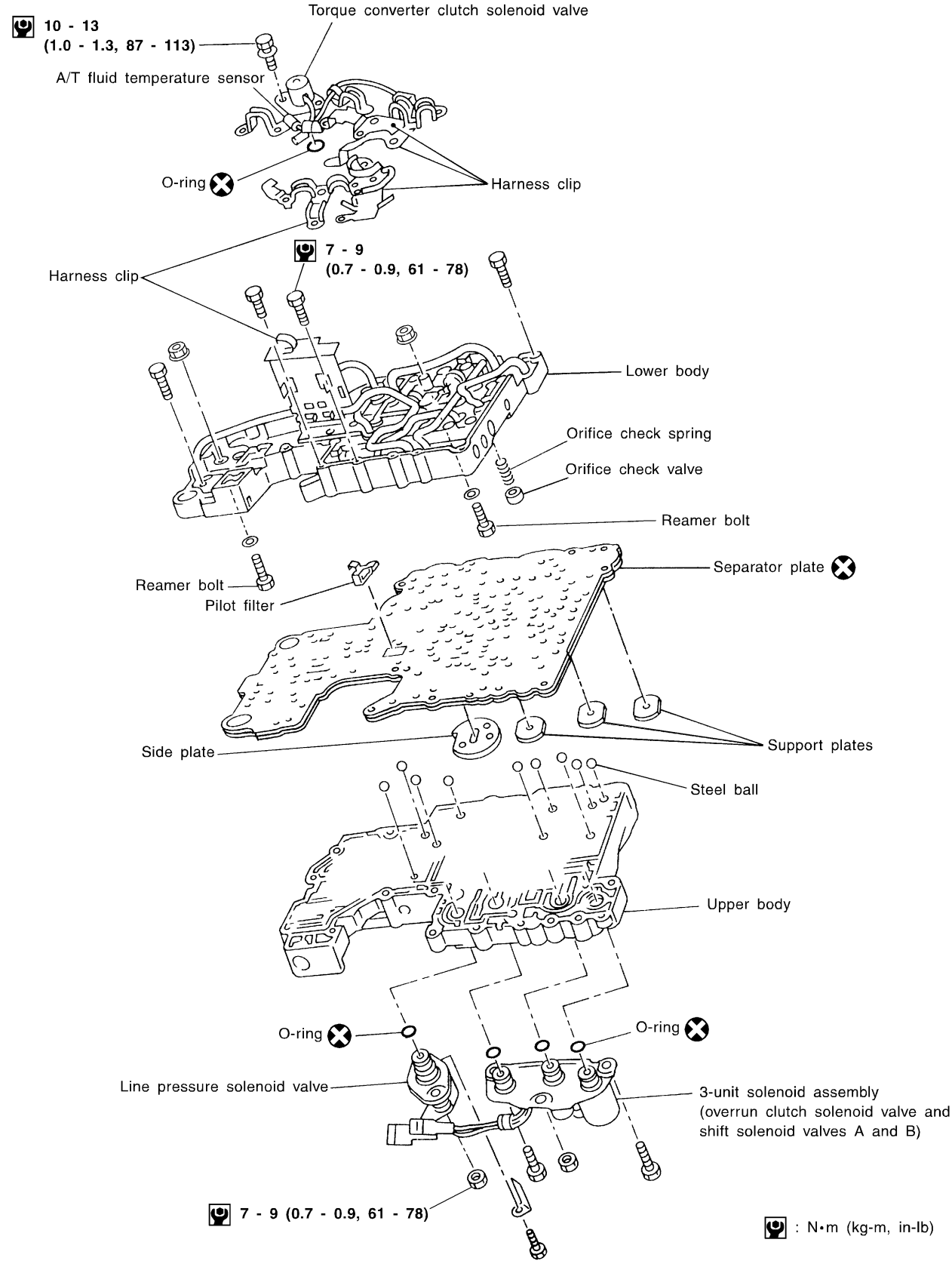

SAT534J

DISASSEMBLY

NBAT0117

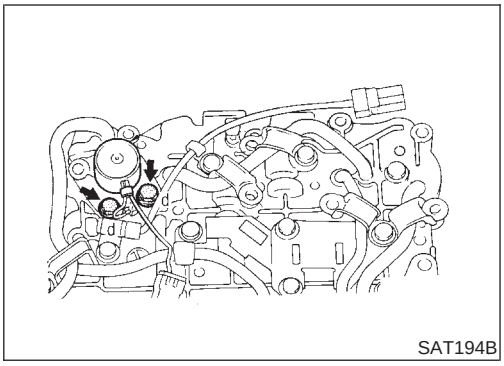
SAT194B

1. Remove solenoids.
a. Remove torque converter clutch solenoid valve and side plate from lower body.
b. Remove O-ring from solenoid.

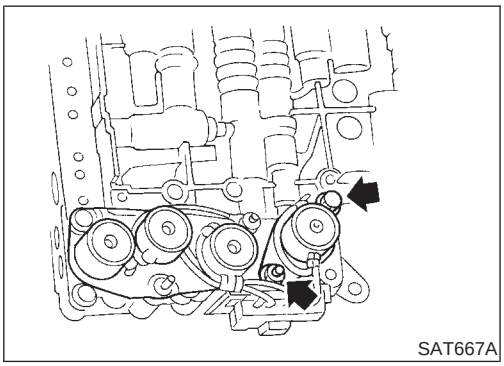
SAT667A

c. Remove line pressure solenoid valve from upper body.
d. Remove O-ring from solenoid.

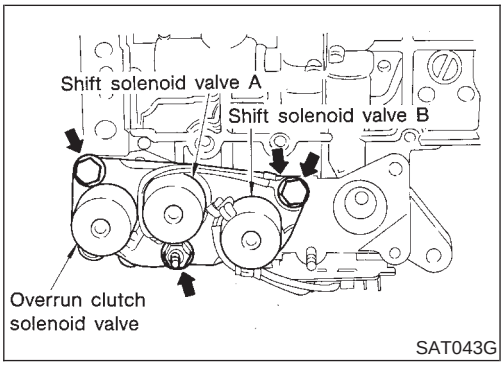

SAT043G

e. Remove 3-unit solenoid assembly from upper body.
f. Remove O-rings from solenoids.

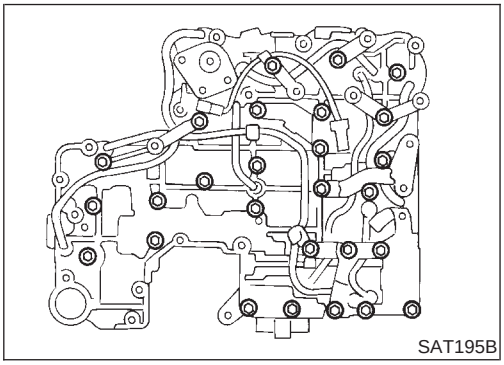
SAT195B

2. Disassemble upper and lower bodies.
a. Place upper body facedown, and remove bolts, reamer bolts and support plates.
b. Remove lower body, separator plate as a unit from upper body.
- **Be careful not to drop pilot filter, orifice check valve, spring and steel balls.**

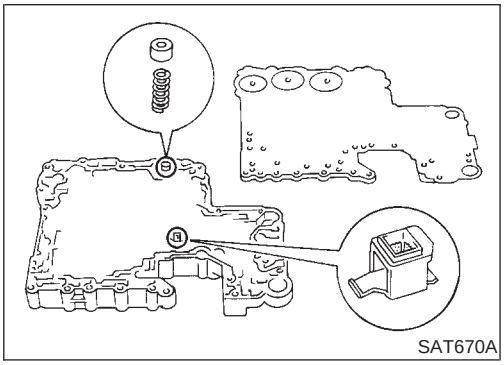
SAT670A

c. Place lower body facedown, and remove separator plate.
d. Remove pilot filter, orifice check valve and orifice check spring.

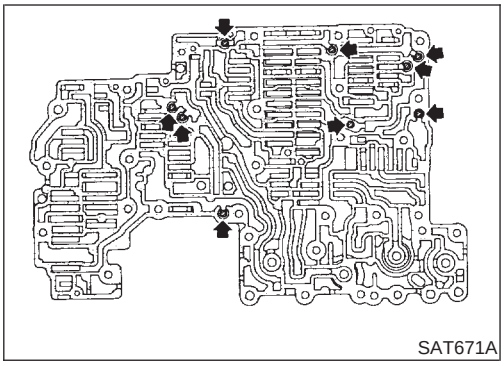
SAT671A

e. Check to see that steel balls are properly positioned in upper body. Then remove them from upper body.

INSPECTION

NBAT0118

Lower and Upper Bodies

NBAT0118S01

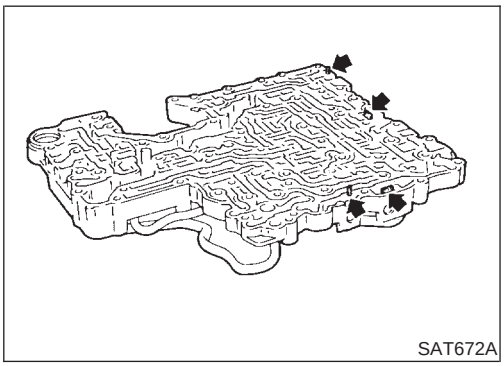
SAT672A

- Check to see that there are pins and retainer plates in lower body.

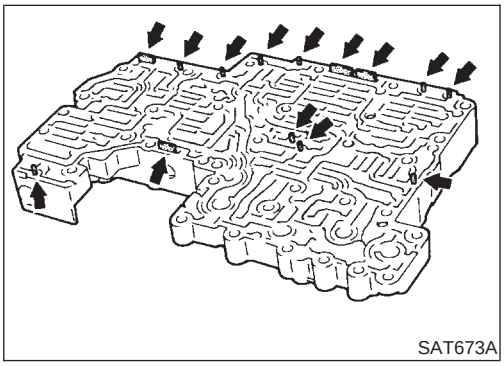
SAT673A

- Check to see that there are pins and retainer plates in upper body.
- **Be careful not to lose these parts.**

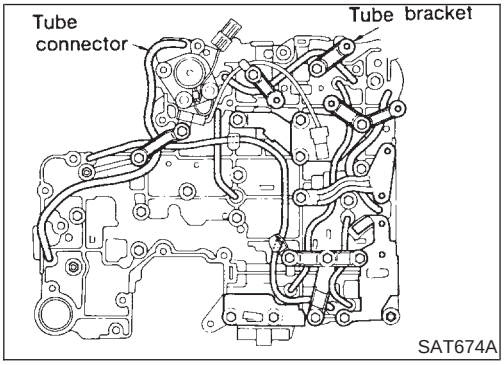

SAT674A

- Check to make sure that oil circuits are clean and free from damage.
- Check tube brackets and tube connectors for damage.

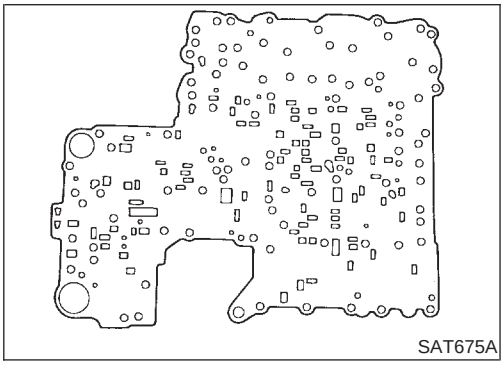
SAT675A

Separator Plate

NBAT0118S02

- Make sure that separator plate is free of damage and not deformed and oil holes are clean.

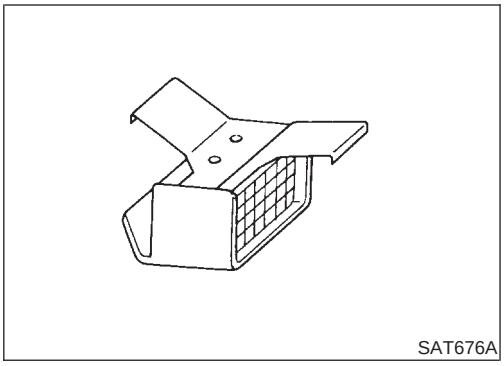
SAT676A

Pilot Filter

NBAT0118S03

- Check to make sure that filter is not clogged or damaged.

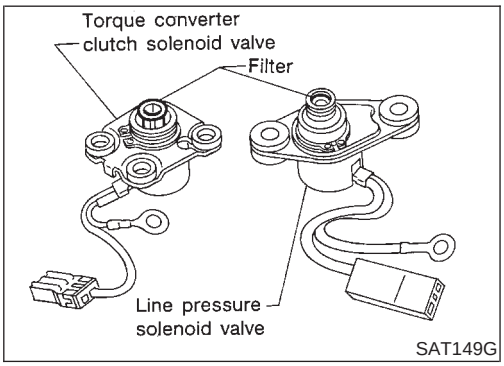

SAT149G

Torque Converter Clutch Solenoid Valve

NBAT0118S04

- Check that filter is not clogged or damaged.
- Measure resistance. Refer to "Component Inspection", AT-146.

Line Pressure Solenoid Valve

NBAT0118S05

- Check that filter is not clogged or damaged.
- Measure resistance. Refer to "Component Inspection", AT-146.

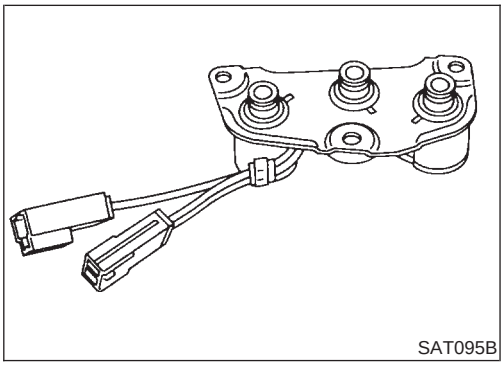
SAT095B

3-Unit Solenoid Assembly (Overrun Clutch Solenoid Valve and Shift Solenoid Valves A and B)

NBAT0118S06

- Measure resistance of each solenoid. Refer to "Component Inspection", AT-146.

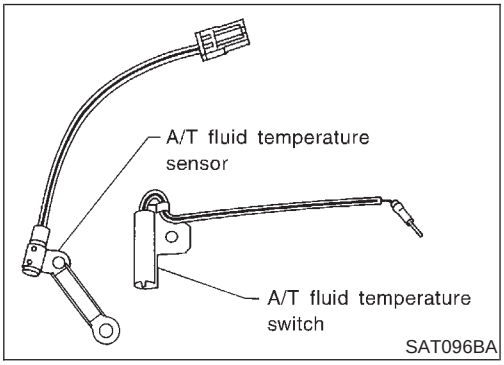

SAT096BA

A/T Fluid Temperature Sensor and Switch

NBAT0118S07

- Measure resistance. Refer to "Component Inspection", AT-109 and AT-251.

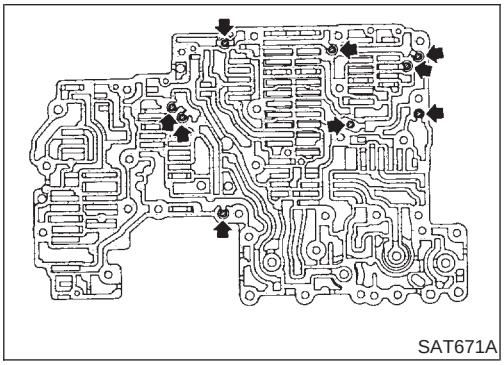
SAT671A

ASSEMBLY

NBAT0119

1. Install upper and lower bodies.

a. Place oil circuit of upper body face up. Install steel balls in their proper positions.

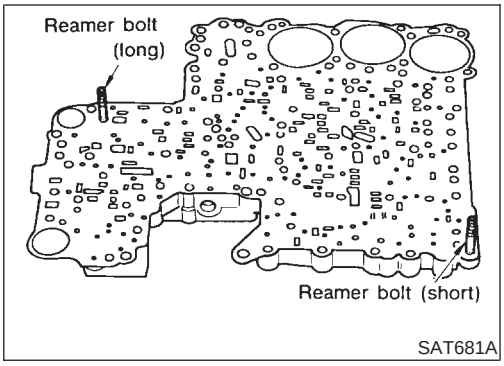

SAT681A

b. Install reamer bolts from bottom of upper body.

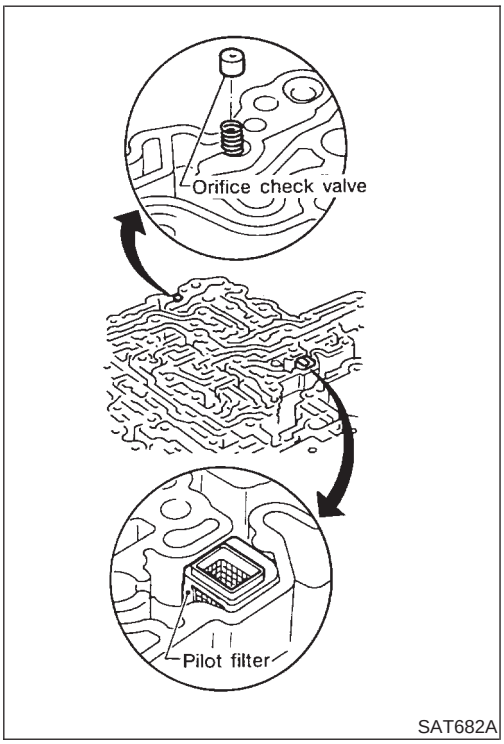

SAT682A

c. Place oil circuit of lower body face up. Install orifice check spring, orifice check valve and pilot filter.

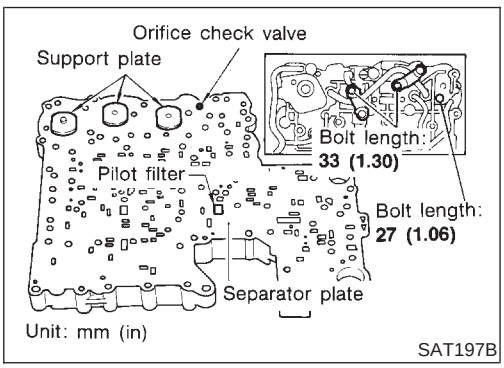

SAT197B

d. Install lower separator plate on lower body.

e. Install and temporarily tighten support plates, A/T fluid temperature sensor and tube brackets.

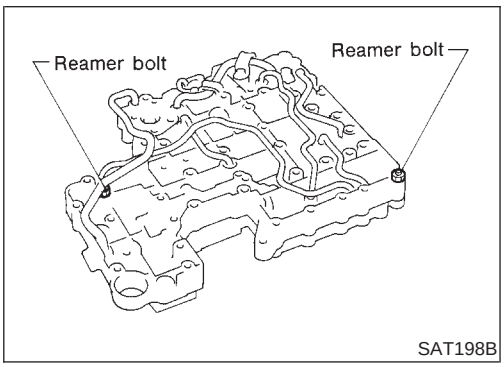

SAT198B

f. Temporarily assemble lower and upper bodies, using reamer bolt as a guide.

- **Be careful not to dislocate or drop steel balls, orifice check spring, orifice check valve and pilot filter.**

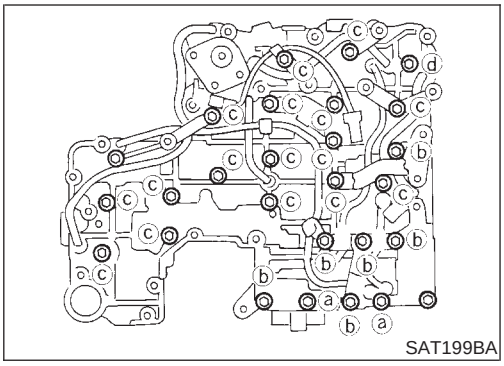

g. Install and temporarily tighten bolts and tube brackets in their proper locations.

Bolt length and location:

Bolt symbol	a	b	c	d
Bolt length mm (in)	70 (2.76)	50 (1.97)	33 (1.30)	27 (1.06)

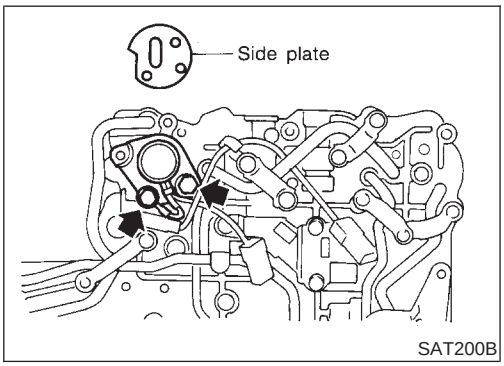

2. Install solenoids.

a. Attach O-ring and install torque converter clutch solenoid valve and side plates onto lower body.

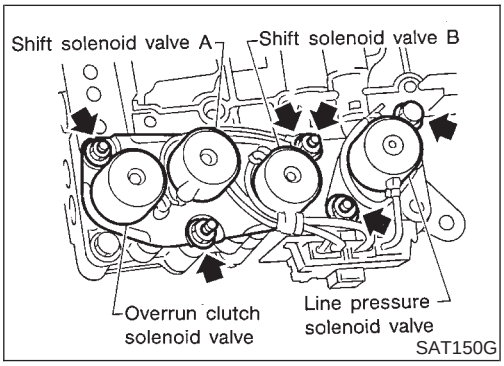

b. Attach O-rings and install 3-unit solenoids assembly onto upper body.

c. Attach O-ring and install line pressure solenoid valve onto upper body.

3. Tighten all bolts.

Control Valve Upper Body

COMPONENTS

NBAT0120

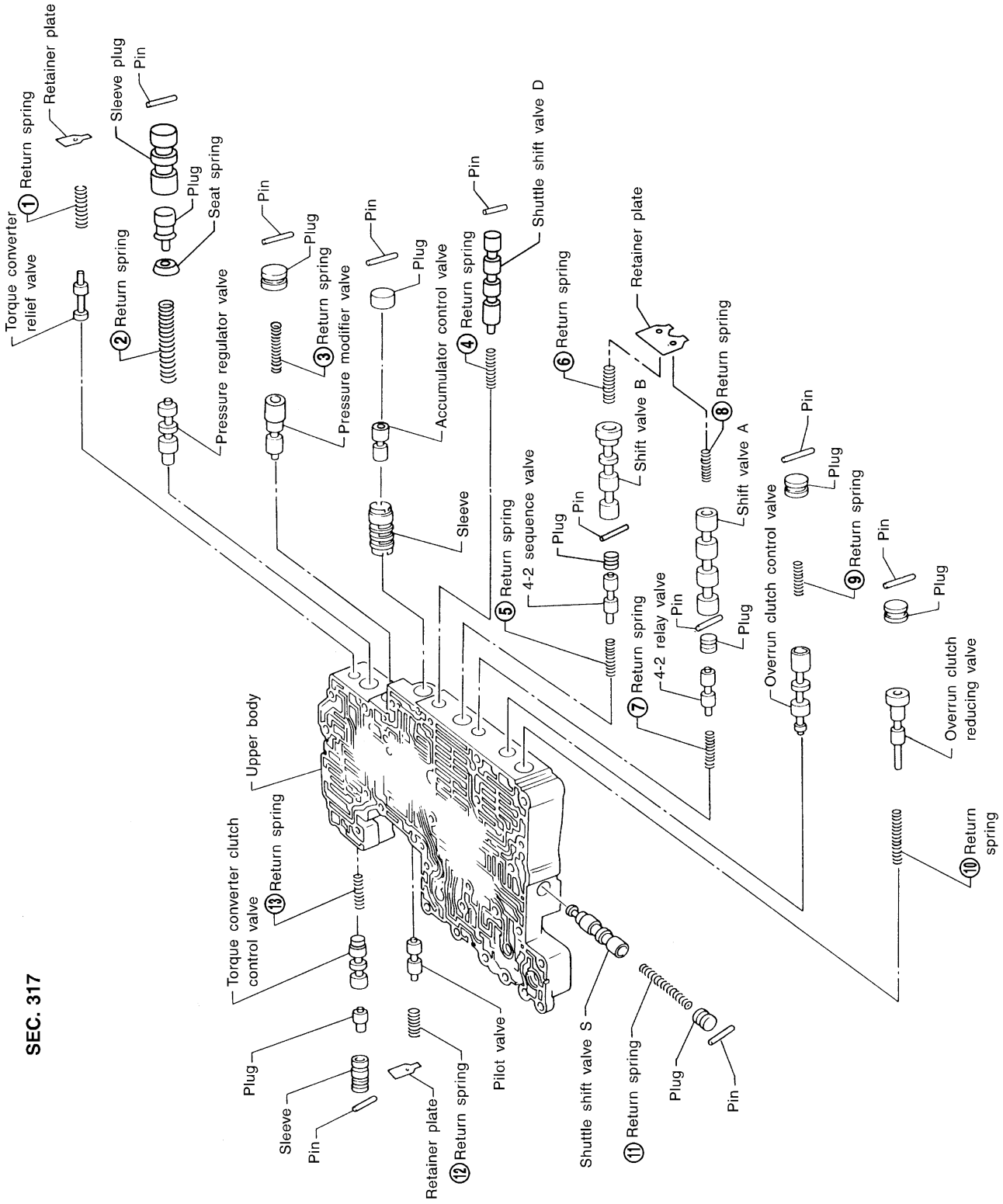

SAT142JA

Apply ATF to all components before their installation.
Numbers preceding valve springs correspond with those shown in SDS on page AT-340.

DISASSEMBLY

NBAT0121

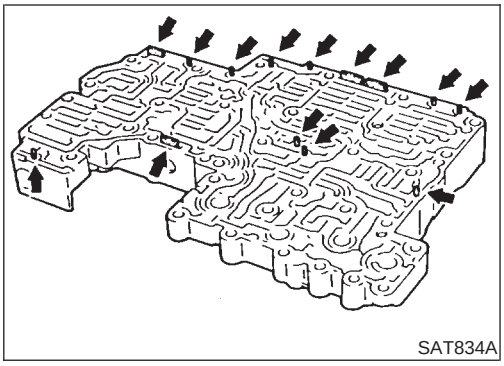
SAT834A

1. Remove valves at parallel pins.
- **Do not use a magnetic hand.**

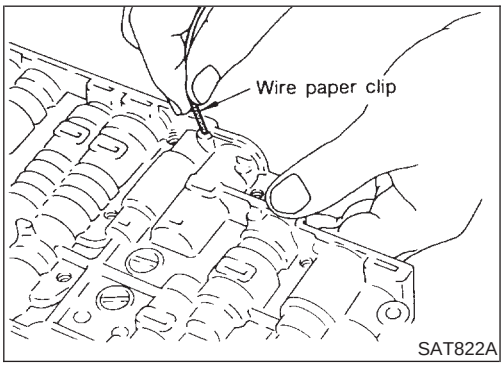

SAT822A

a. Use a wire paper clip to push out parallel pins.

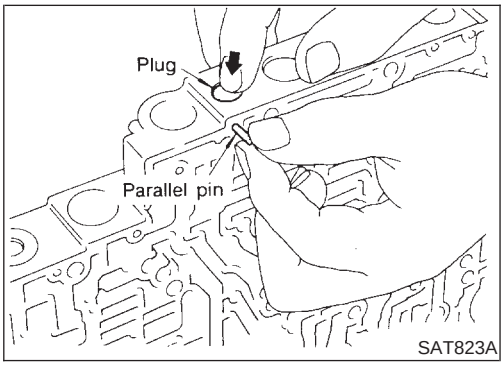

SAT823A

b. Remove parallel pins while pressing their corresponding plugs and sleeves.
- **Remove plug slowly to prevent internal parts from jumping out.**

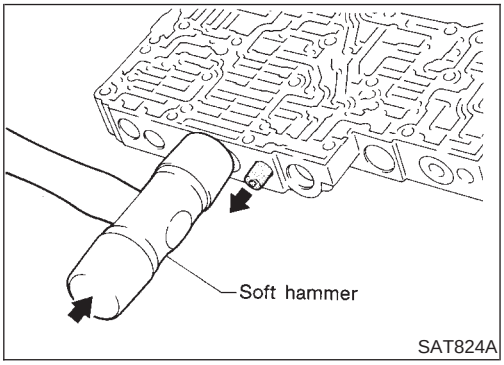

SAT824A

c. Place mating surface of valve facedown, and remove internal parts.
- **If a valve is hard to remove, place valve body facedown and lightly tap it with a soft hammer.**
- **Be careful not to drop or damage valves and sleeves.**

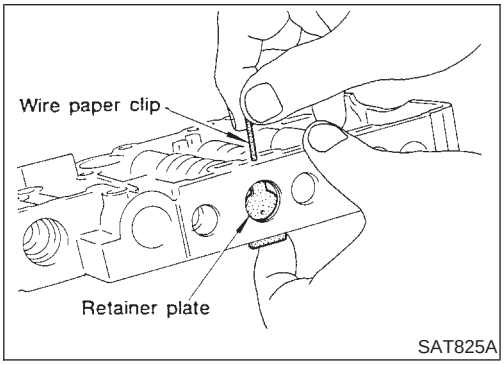

SAT825A

2. Remove valves at retainer plates.

a. Pry out retainer plate with wire paper clip.

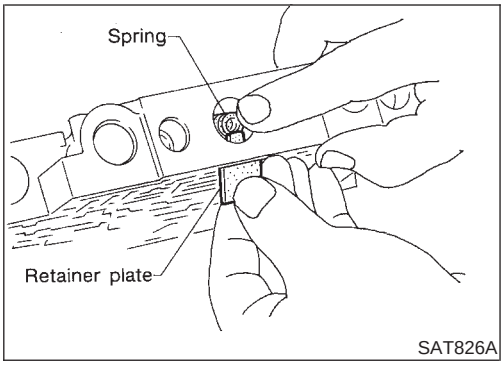

SAT826A

b. Remove retainer plates while holding spring.

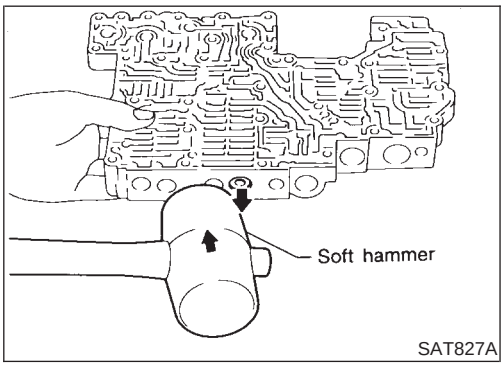

SAT827A

c. Place mating surface of valve facedown, and remove internal parts.

- **If a valve is hard to remove, lightly tap valve body with a soft hammer.**
- **Be careful not to drop or damage valves, sleeves, etc.**

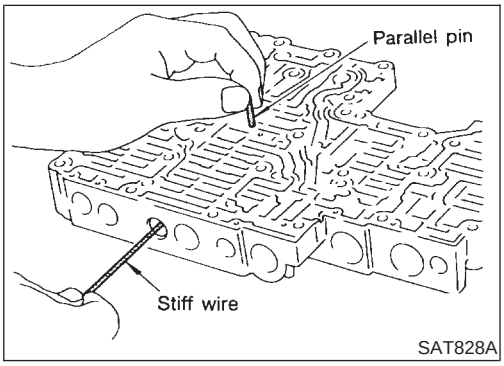

SAT828A

- 4-2 sequence valve and relay valve are located far back in upper body. If they are hard to remove, carefully push them out using stiff wire.
- **Be careful not to scratch sliding surface of valve with wire.**

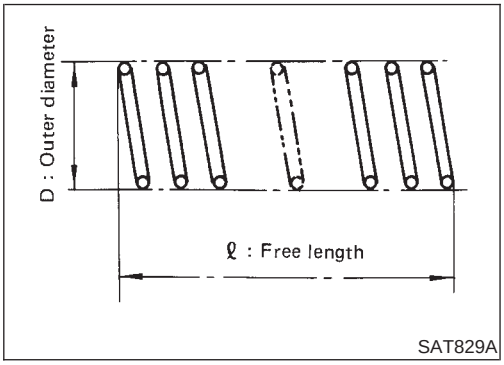

SAT829A

INSPECTION

NBAT0122

Valve Springs

NBAT0122S01

- Measure free length and outer diameter of each valve spring. Also check for damage or deformation.

  Inspection standard:

  Refer to SDS, AT-340.

- Replace valve springs if deformed or fatigued.

Control Valves

NBAT0122S02

- Check sliding surfaces of valves, sleeves and plugs.

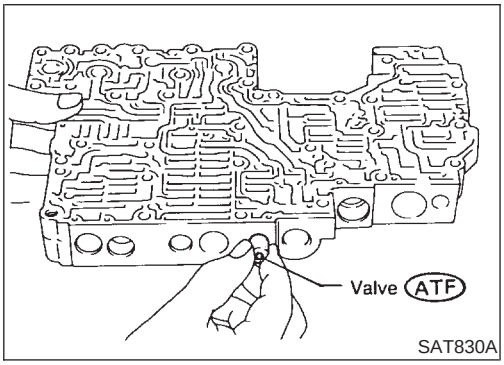

SAT830A

ASSEMBLY

NBAT0123

1. Lubricate the control valve body and all valves with ATF. Install control valves by sliding them carefully into their bores.

- **Be careful not to scratch or damage valve body.**

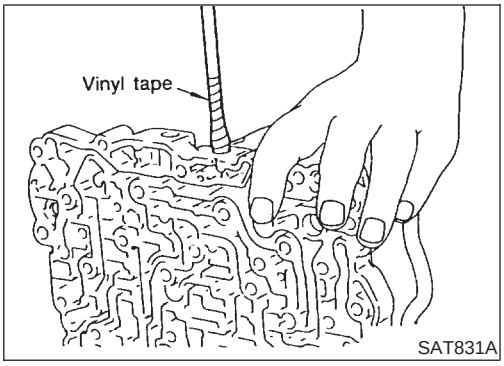

- Wrap a small screwdriver with vinyl tape and use it to insert the valves into proper position.

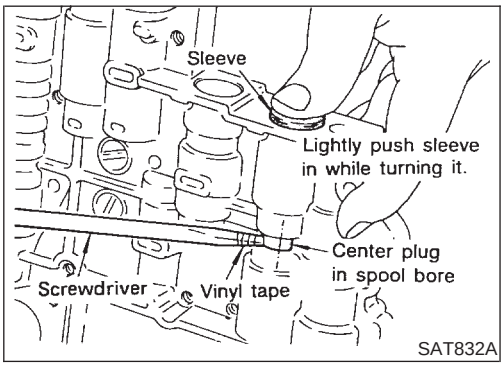

Pressure regulator valve

- If pressure regulator plug is not centered properly, sleeve cannot be inserted into bore in upper body. If this happens, use vinyl tape wrapped screwdriver to center sleeve until it can be inserted.
- Turn sleeve slightly while installing.

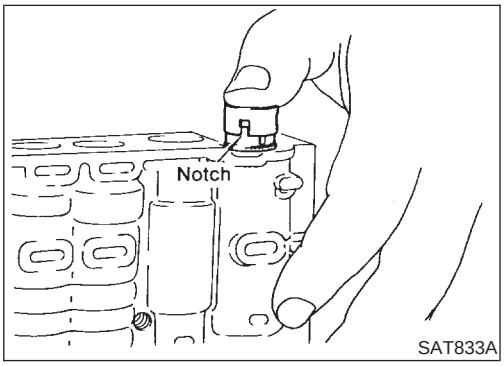

Accumulator control plug

- Align protrusion of accumulator control sleeve with notch in plug.
- Align parallel pin groove in plug with parallel pin, and install accumulator control valve.

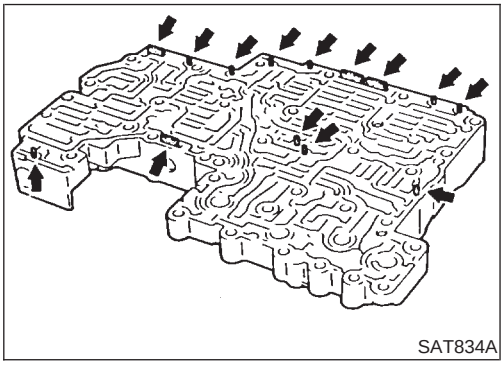

2. Install parallel pins and retainer plates.

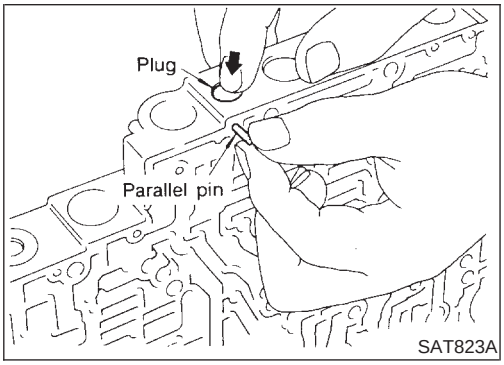

- **While pushing plug, install parallel pin.**

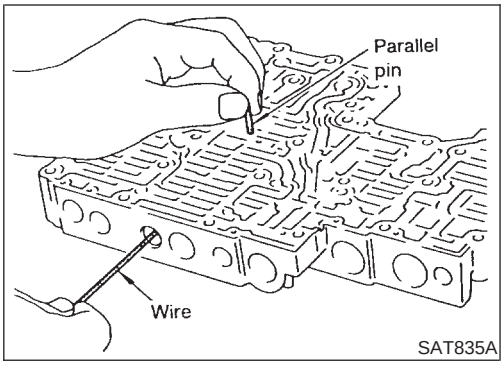

4-2 sequence valve and relay valve

- Push 4-2 sequence valve and relay valve with wire wrapped in vinyl tape to prevent scratching valve body. Install parallel pins.

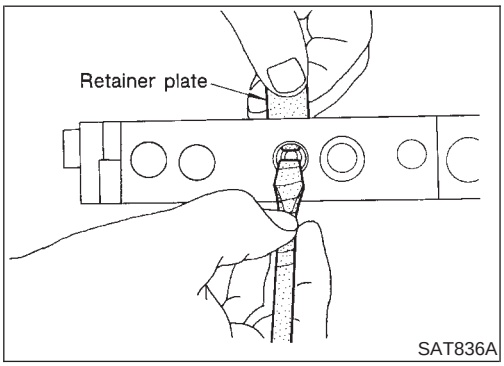

- Insert retainer plate while pushing spring.

Control Valve Lower Body

COMPONENTS

NBAT0124

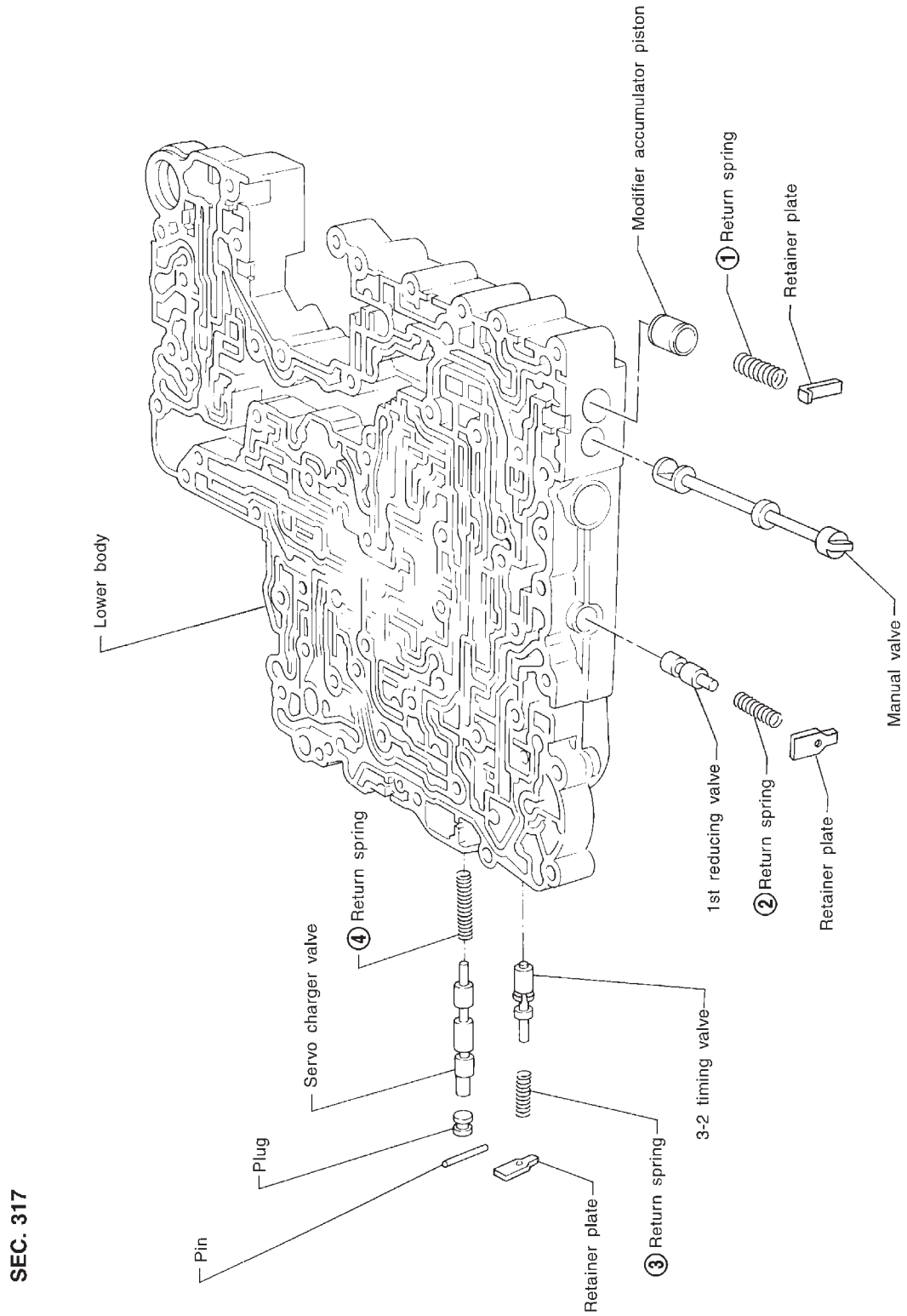

SAT966I

Apply ATF to all components before their installation.
Numbers preceding valve springs correspond with those shown in SDS on page AT-340.

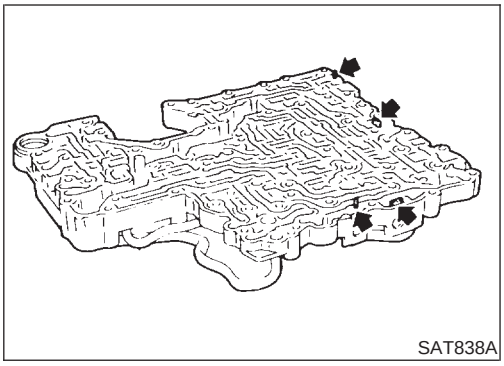
SAT838A

DISASSEMBLY

NBAT0125

1. Remove valves at parallel pins.
2. Remove valves at retainer plates.
   For removal procedures, refer to "DISASSEMBLY" of Control Valve Upper Body.

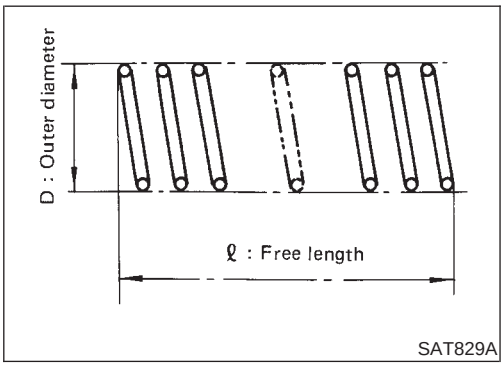

SAT829A

INSPECTION

NBAT0126

Valve Springs

NBAT0126S01

- Check each valve spring for damage or deformation. Also measure free length and outer diameter.

  Inspection standard:

  Refer to SDS, AT-340.

- Replace valve springs if deformed or fatigued.

Control Valves

NBAT0126S02

- Check sliding surfaces of control valves, sleeves and plugs for damage.

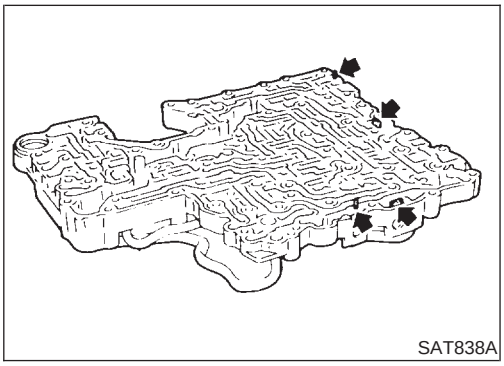
SAT838A

ASSEMBLY

NBAT0127

- Install control valves.
  For installation procedures, refer to "ASSEMBLY" of Control Valve Upper Body, AT-292.

Reverse Clutch

COMPONENTS

NBAT0128

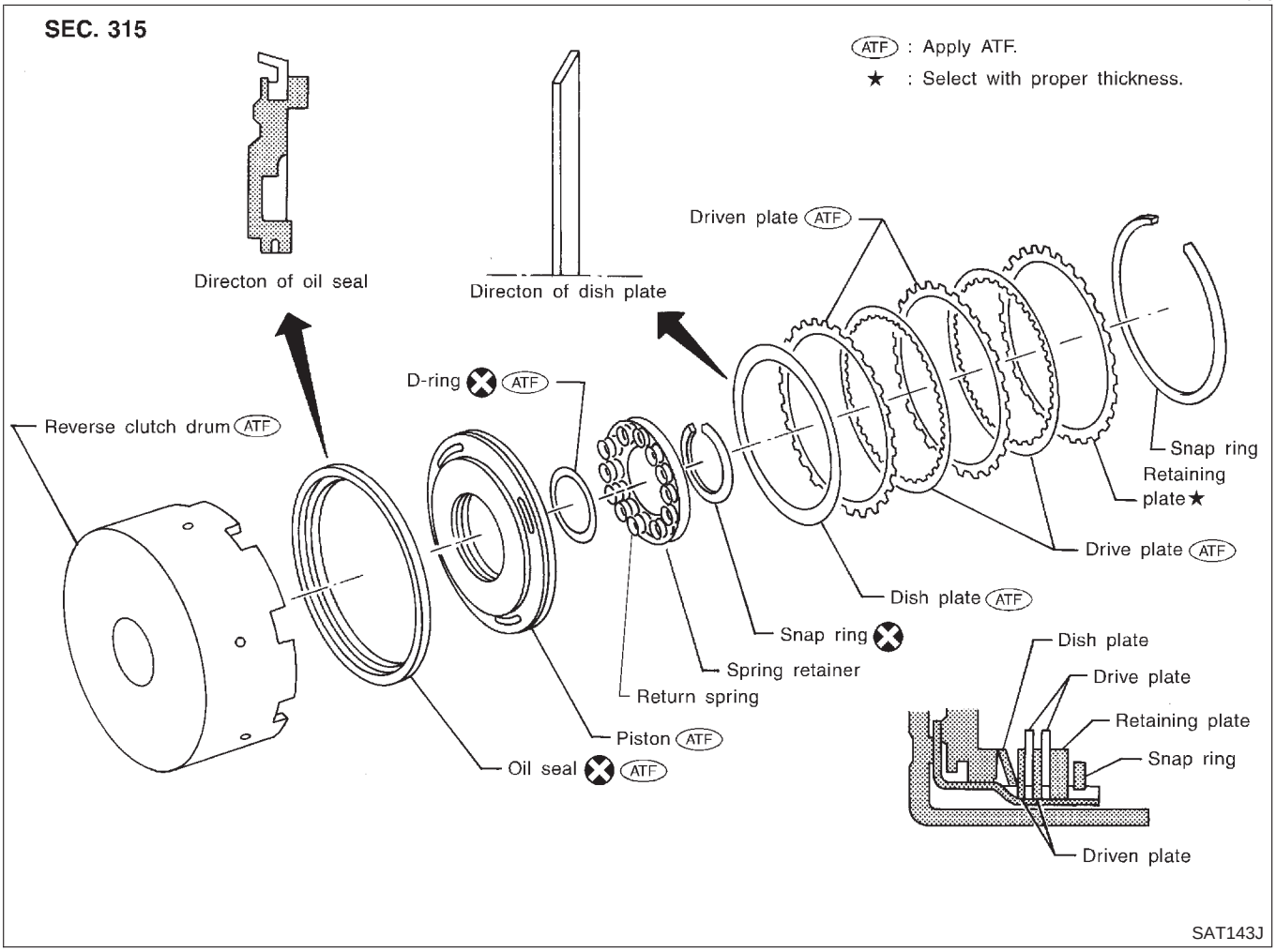

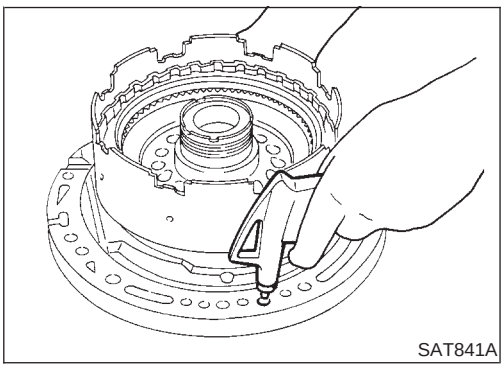

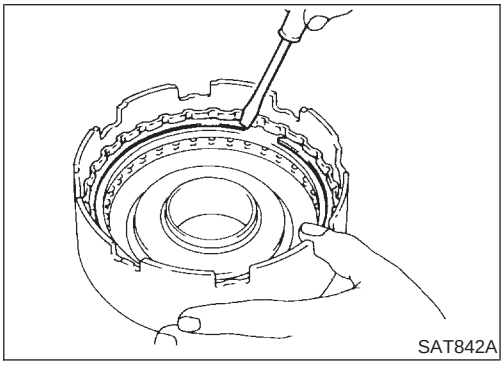

DISASSEMBLY

NBAT0129

1. Check operation of reverse clutch.

a. Install seal ring onto oil pump cover and install reverse clutch. Apply compressed air to oil hole.

b. Check to see that retaining plate moves to snap ring.

c. If retaining plate does not contact snap ring,

- D-ring might be damaged.
- Oil seal might be damaged.
- Fluid might be leaking past piston check ball.

2. Remove drive plates, driven plates, retaining plate, dish plate and snap ring.

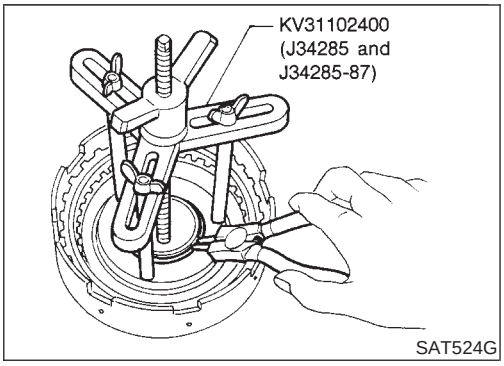

SAT524G

3. Remove snap ring from clutch drum while compressing clutch springs.
- **Do not expand snap ring excessively.**
4. Remove spring retainer and return spring.

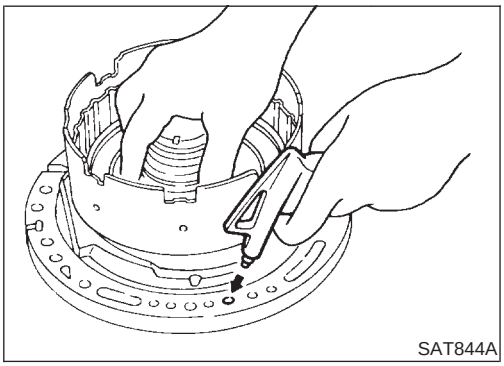
SAT844A

5. Install seal ring onto oil pump cover and install reverse clutch drum. While holding piston, gradually apply compressed air to oil hole until piston is removed.
- **Do not apply compressed air abruptly.**
6. Remove D-ring and oil seal from piston.

INSPECTION

NBAT0130

Reverse Clutch Snap Ring and Spring Retainer

NBAT0130S01

- Check for deformation, fatigue or damage.

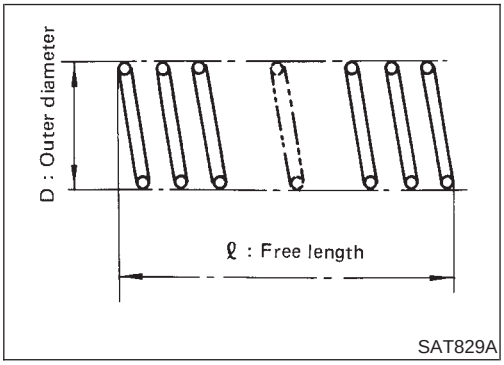

SAT829A

Reverse Clutch Return Springs

NBAT0130S02

- Check for deformation or damage. Also measure free length and outside diameter.

Inspection standard:

Refer to SDS, AT-340.

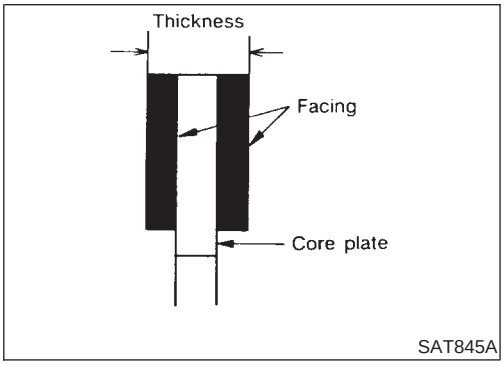

SAT845A

Reverse Clutch Drive Plates

NBAT0130S03

- Check facing for burns, cracks or damage.
- Measure thickness of facing.

Thickness of drive plate:

Standard value: 1.90 - 2.05 mm (0.0748 - 0.0807 in)

Wear limit: 1.80 mm (0.0709 in)

- If not within wear limit, replace.

Reverse Clutch Dish Plate

NBAT0130S04

- Check for deformation or damage.

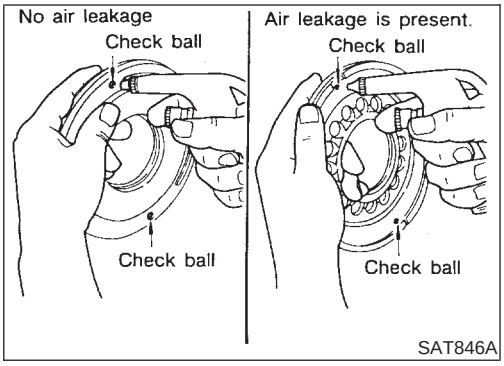

SAT846A

Reverse Clutch Piston

NBAT0130S05

- Shake piston to assure that balls are not seized.
- Apply compressed air to check ball oil hole opposite the return spring. Make sure there is no air leakage.
- Also apply compressed air to oil hole on return spring side to assure that air leaks past ball.

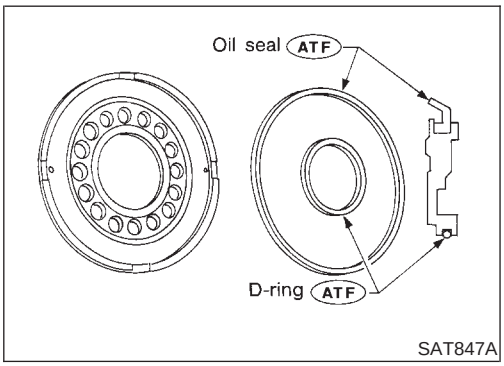

SAT847A

ASSEMBLY

NBAT0131

1. Install D-ring and oil seal on piston.
- **Apply ATF to both parts.**

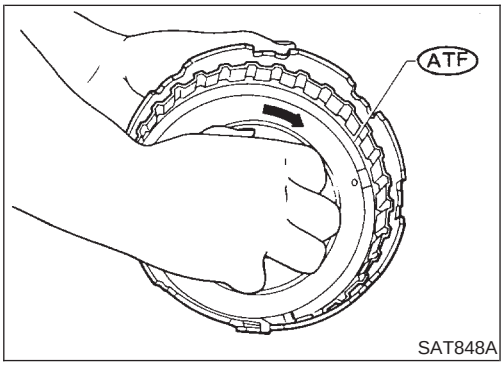

SAT848A

2. Install piston assembly by turning it slowly and evenly.
- **Apply ATF to inner surface of drum.**

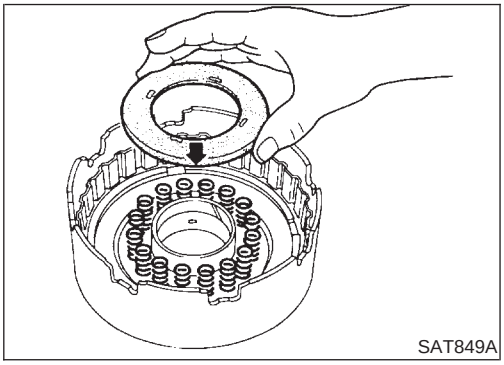
SAT849A

3. Install return springs and spring retainer.

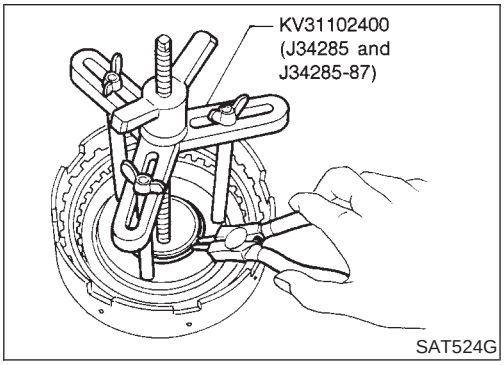

SAT524G

4. Install snap ring while compressing clutch springs.

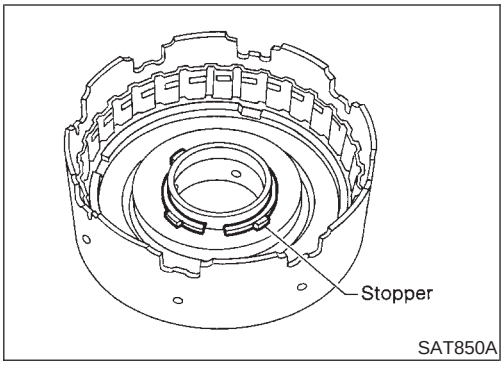

SAT850A

- **Do not align snap ring gap with spring retainer stopper.**

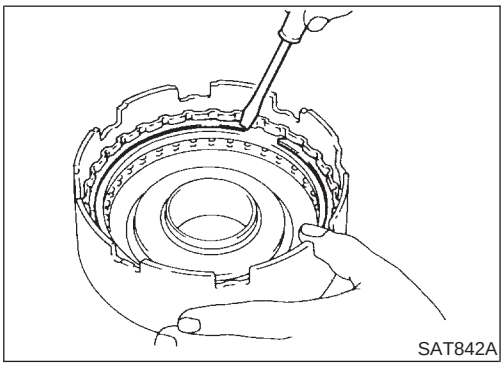
SAT842A

5. Install drive plates, driven plates, retaining plate and dish plate.
6. Install snap ring.

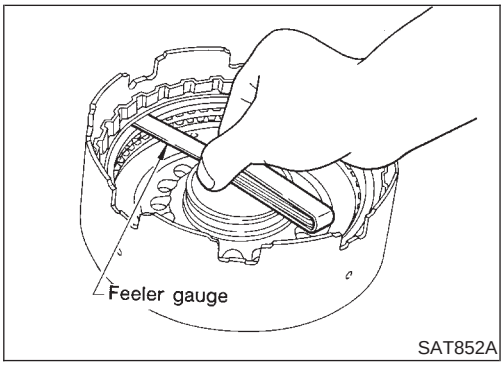

SAT852A

7. Measure clearance between retaining plate and snap ring. If not within allowable limit, select proper retaining plate.

   Specified clearance:
   Standard
   0.5 - 0.8 mm (0.020 - 0.031 in)
   Allowable limit
   1.2 mm (0.047 in)
   Retaining plate:
   Refer to SDS, AT-341.

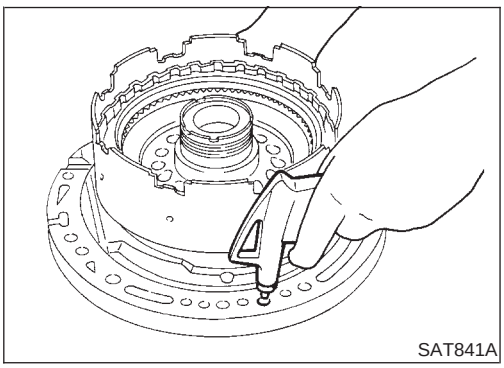
SAT841A

8. Check operation of reverse clutch.
   Refer to "DISASSEMBLY" of Reverse Clutch, AT-297.

High Clutch

COMPONENTS

NBAT0132

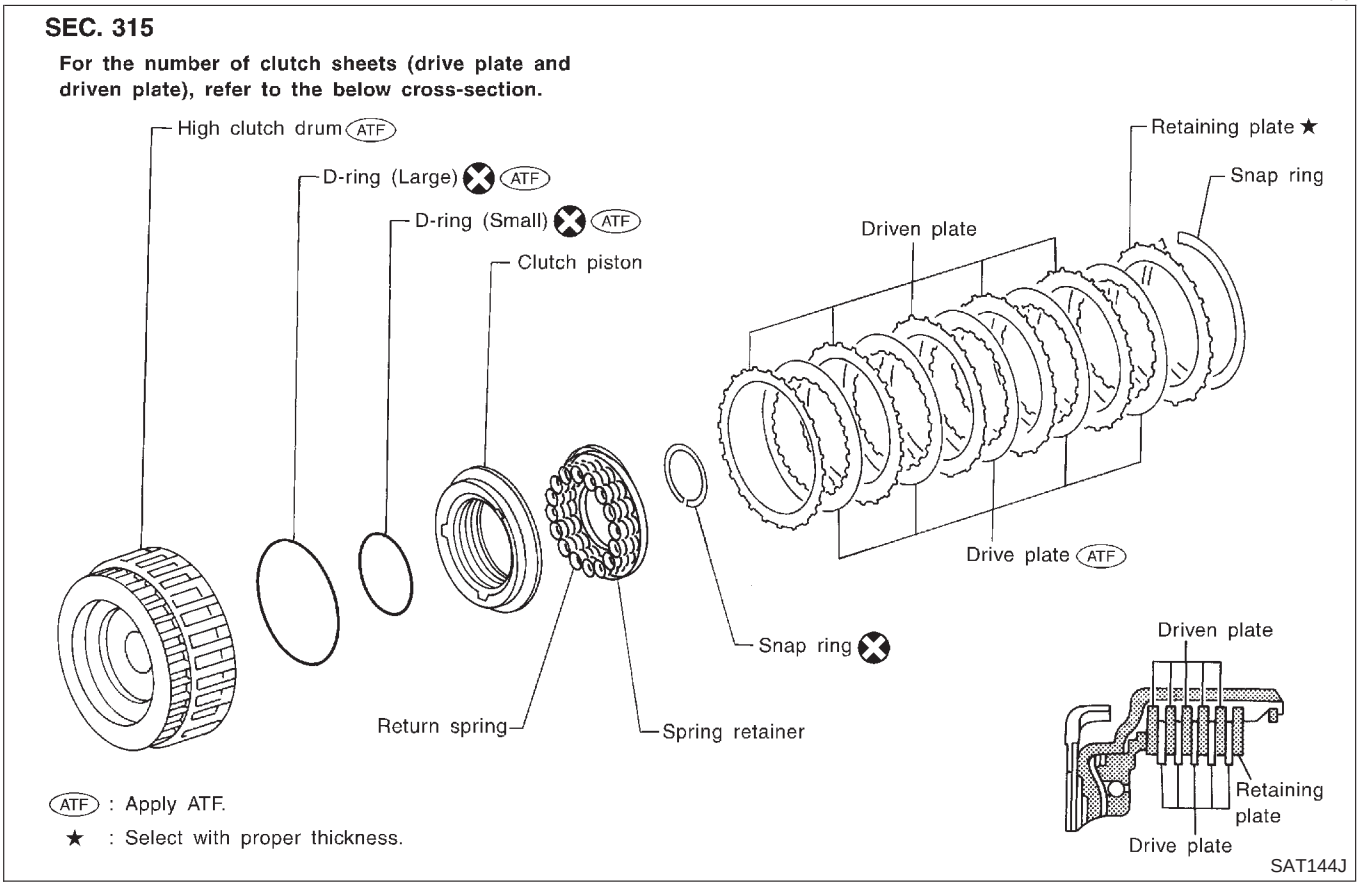

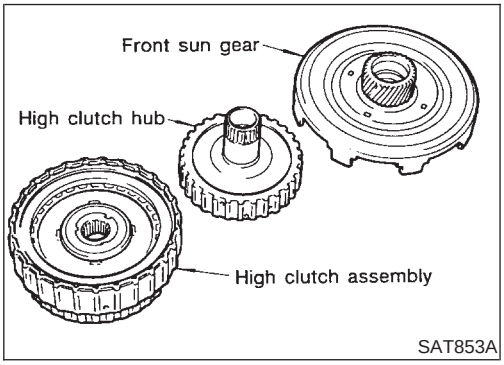

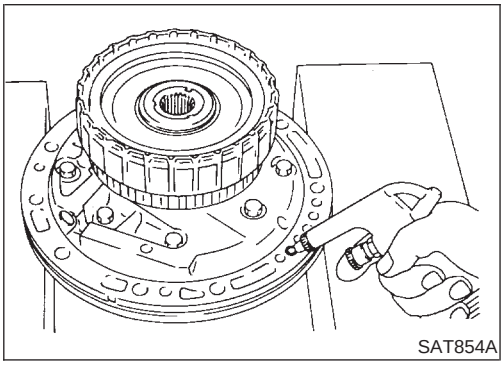

DISASSEMBLY AND ASSEMBLY

NBAT0133

Service procedures for high clutch are essentially the same as those for reverse clutch, with the following exception:

- Check of high clutch operation

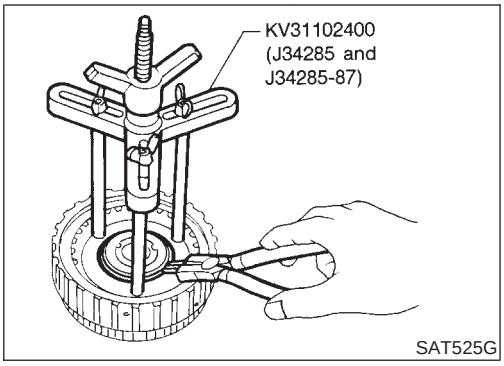

- Removal and installation of return spring

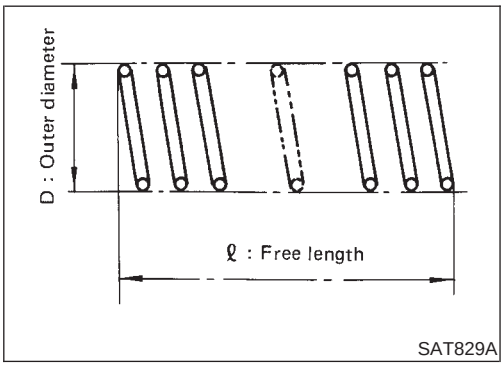

- Inspection of high clutch return springs

  Inspection standard:

  Refer to SDS, AT-340.

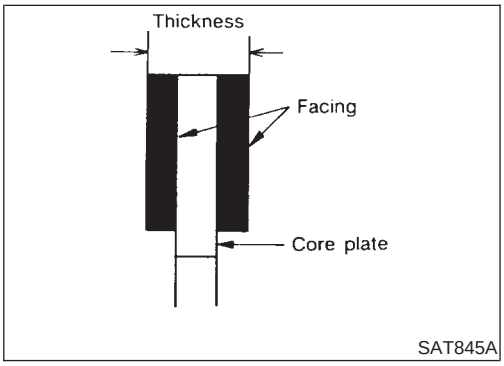

- Inspection of high clutch drive plate

  Thickness of drive plate:

  Standard

  1.52 - 1.67 mm (0.0598 - 0.0657 in)

  Wear limit

  1.40 mm (0.0551 in)

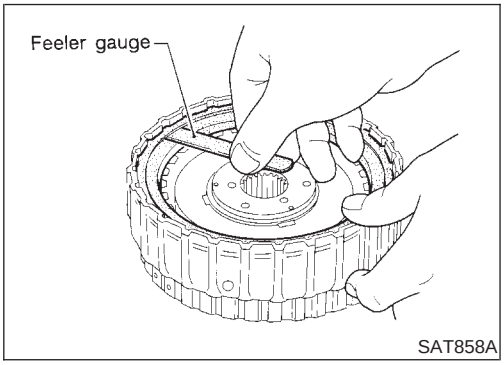

- Measurement of clearance between retaining plate and snap ring

  Specified clearance:

  Standard

  1.8 - 2.2 mm (0.071 - 0.087 in)

  Allowable limit

  2.8 mm (0.110 in)

  Retaining plate:

  Refer to SDS, AT-341.

Forward and Overrun Clutches

COMPONENTS

NBAT0134

SEC. 315

For the number of clutch sheets (drive plate and driven plate), refer to the below cross-section.

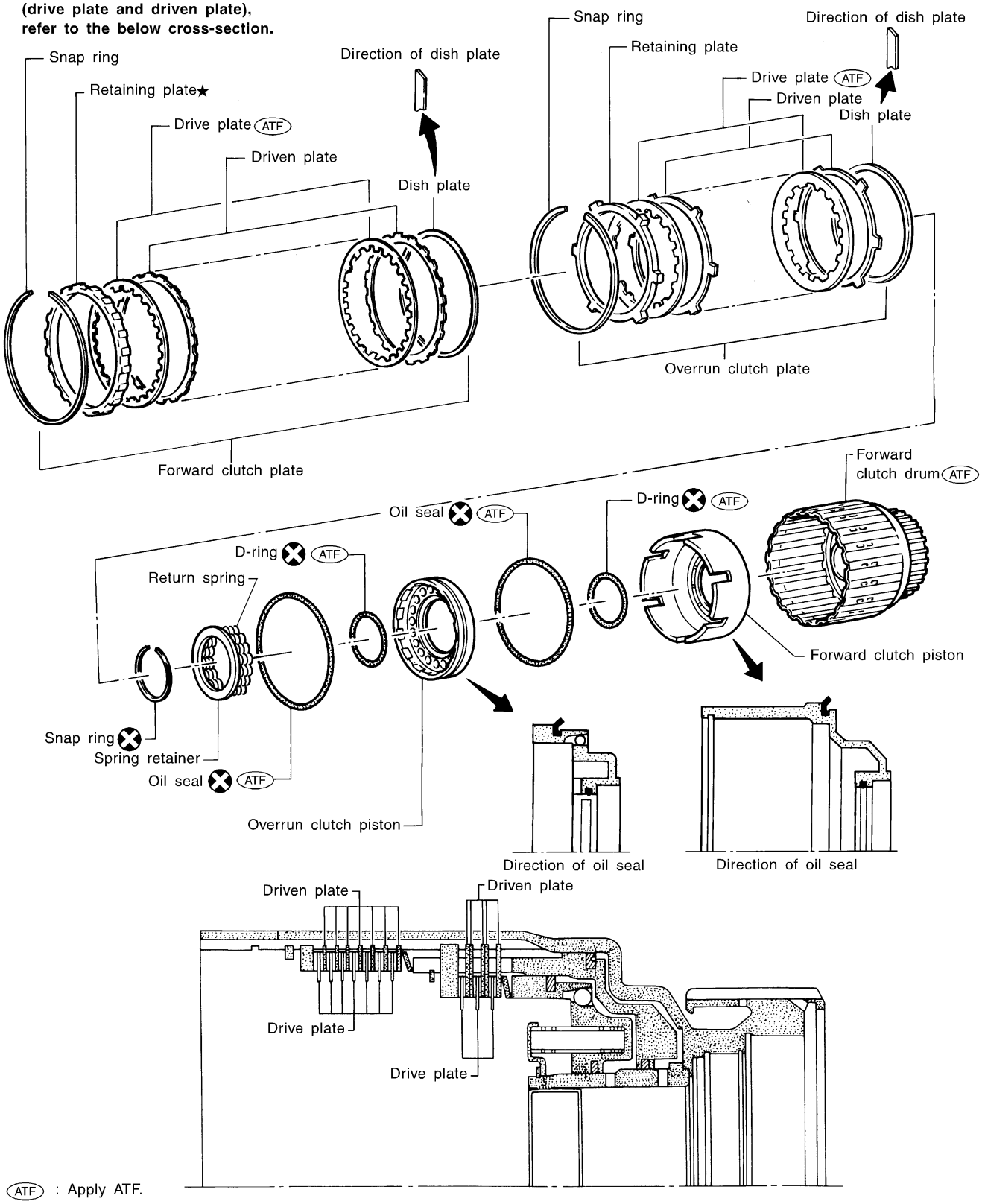

(ATF) : Apply ATF.

★ : Select with proper thickness.

SAT536J

DISASSEMBLY AND ASSEMBLY

NBAT0135

Forward and overrun clutches are serviced essentially the same way as reverse clutch is serviced. However, note the following exceptions.

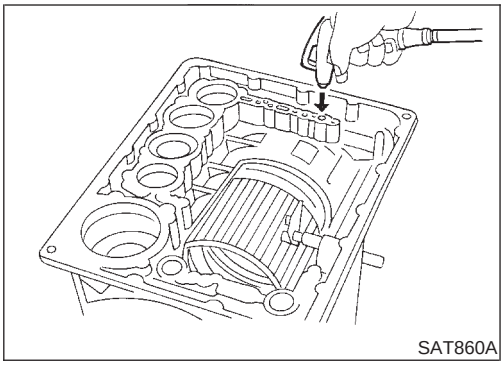
SAT860A

- Check of forward clutch operation

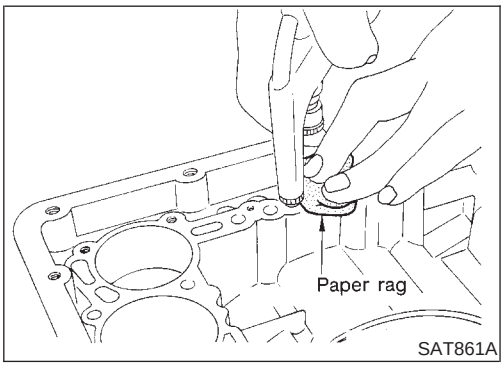

SAT861A

- Check of overrun clutch operation

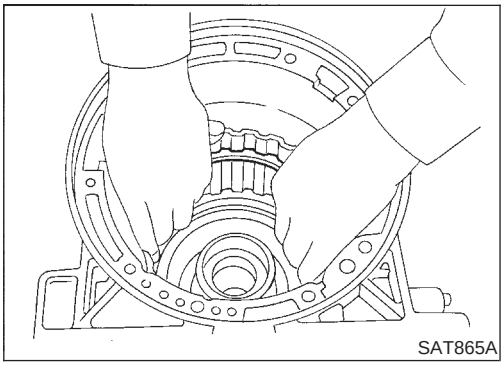
SAT865A

- Removal of forward clutch drum
  Remove forward clutch drum from transmission case by holding snap ring.

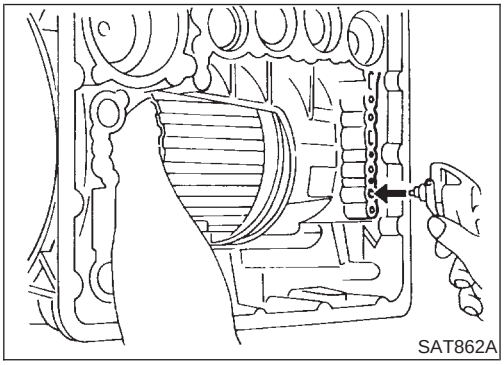
SAT862A

- Removal of forward clutch and overrun clutch pistons

a) While holding overrun clutch piston, gradually apply compressed air to oil hole.

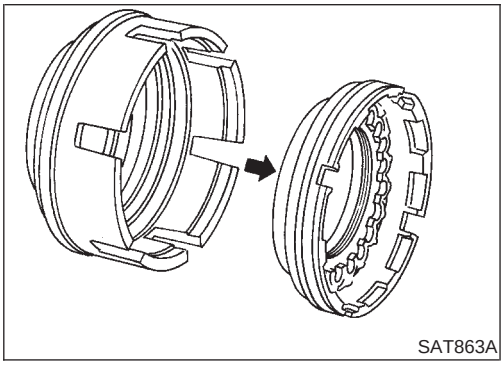
SAT863A

b) Remove overrun clutch from forward clutch.

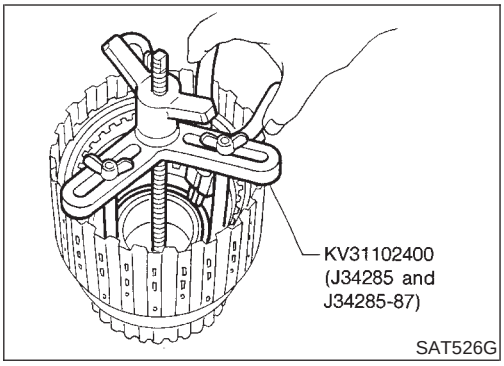

SAT526G

- Removal and installation of return springs

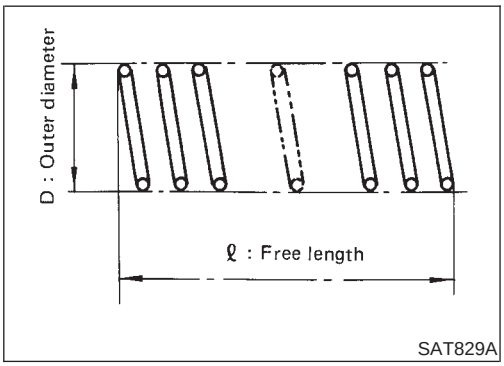

SAT829A

- Inspection of forward clutch and overrun clutch return springs

  Inspection standard:

  Refer to SDS, AT-340.

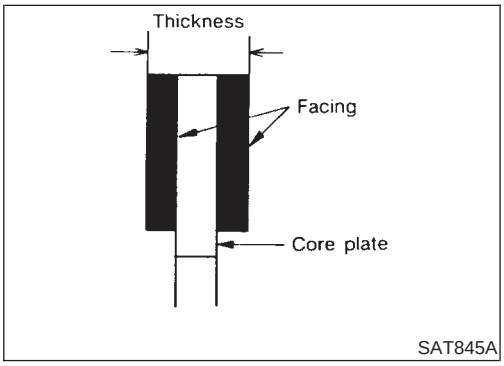

SAT845A

- Inspection of forward clutch drive plates

  Thickness of drive plate:

  Standard

  1.52 - 1.67 mm (0.0598 - 0.0657 in)

  Wear limit

  1.40 mm (0.0551 in)

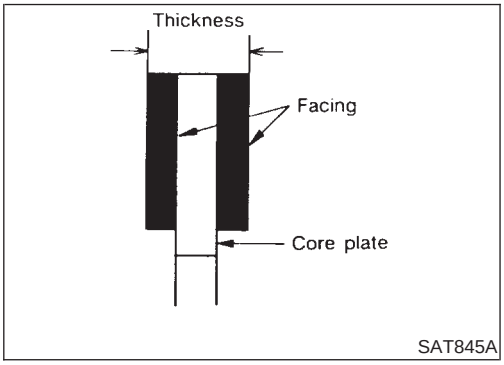

SAT845A

- Inspection of overrun clutch drive plates

  Thickness of drive plate:

  Standard

  1.90 - 2.05 mm (0.0748 - 0.0807 in)

  Wear limit

  1.80 mm (0.0709 in)

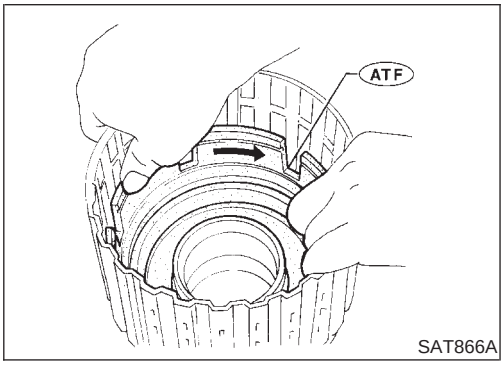

SAT866A

- Installation of forward clutch piston and overrun clutch piston

a) Install forward clutch piston by turning it slowly and evenly.

- **Apply ATF to inner surface of clutch drum.**

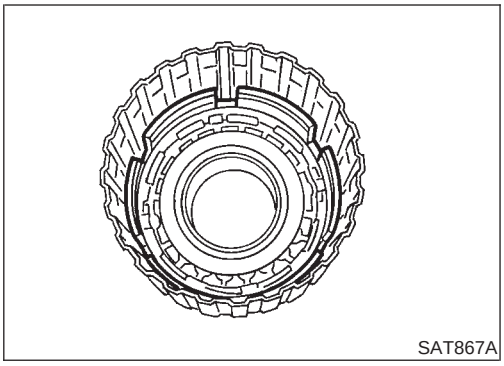
SAT867A

- **Align notch in forward clutch piston with groove in forward clutch drum.**

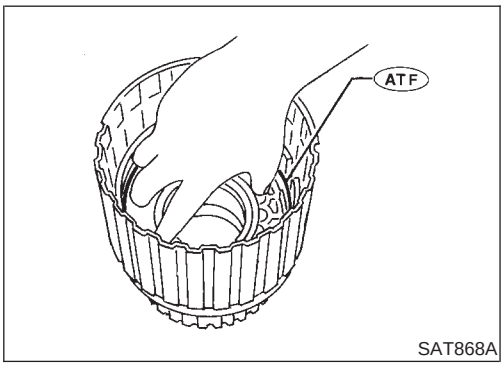

SAT868A

b) Install overrun clutch by turning it slowly and evenly.

- **Apply ATF to inner surface of forward clutch piston.**

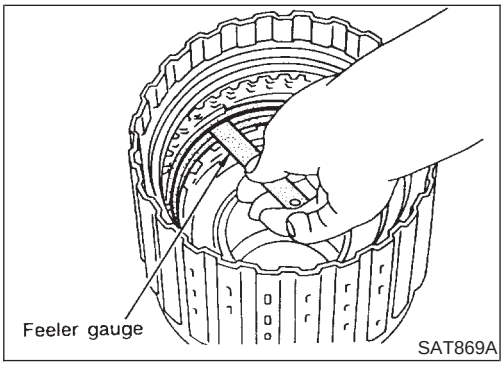

SAT869A

- Measurement of clearance between retaining plate and snap ring of overrun clutch

  Specified clearance:
  Standard
  1.0 - 1.4 mm (0.039 - 0.055 in)
  Allowable limit
  2.0 mm (0.079 in)
  Retaining plate:
  Refer to SDS, AT-342.

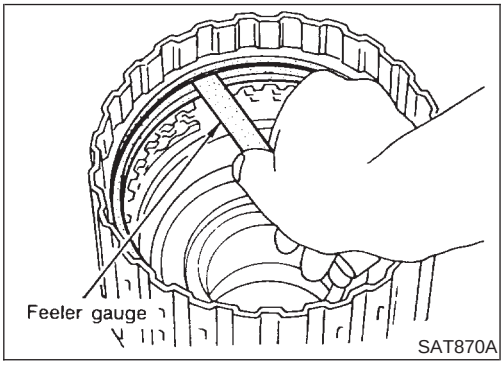

SAT870A

- Measurement of clearance between retaining plate and snap ring of forward clutch

  Specified clearance:
  Standard
  0.35 - 0.75 mm (0.0138 - 0.0295 in)
  Allowable limit
  1.85 mm (0.0728 in)
  Retaining plate:
  Refer to SDS, AT-342.

Low & Reverse Brake

COMPONENTS

NBAT0136

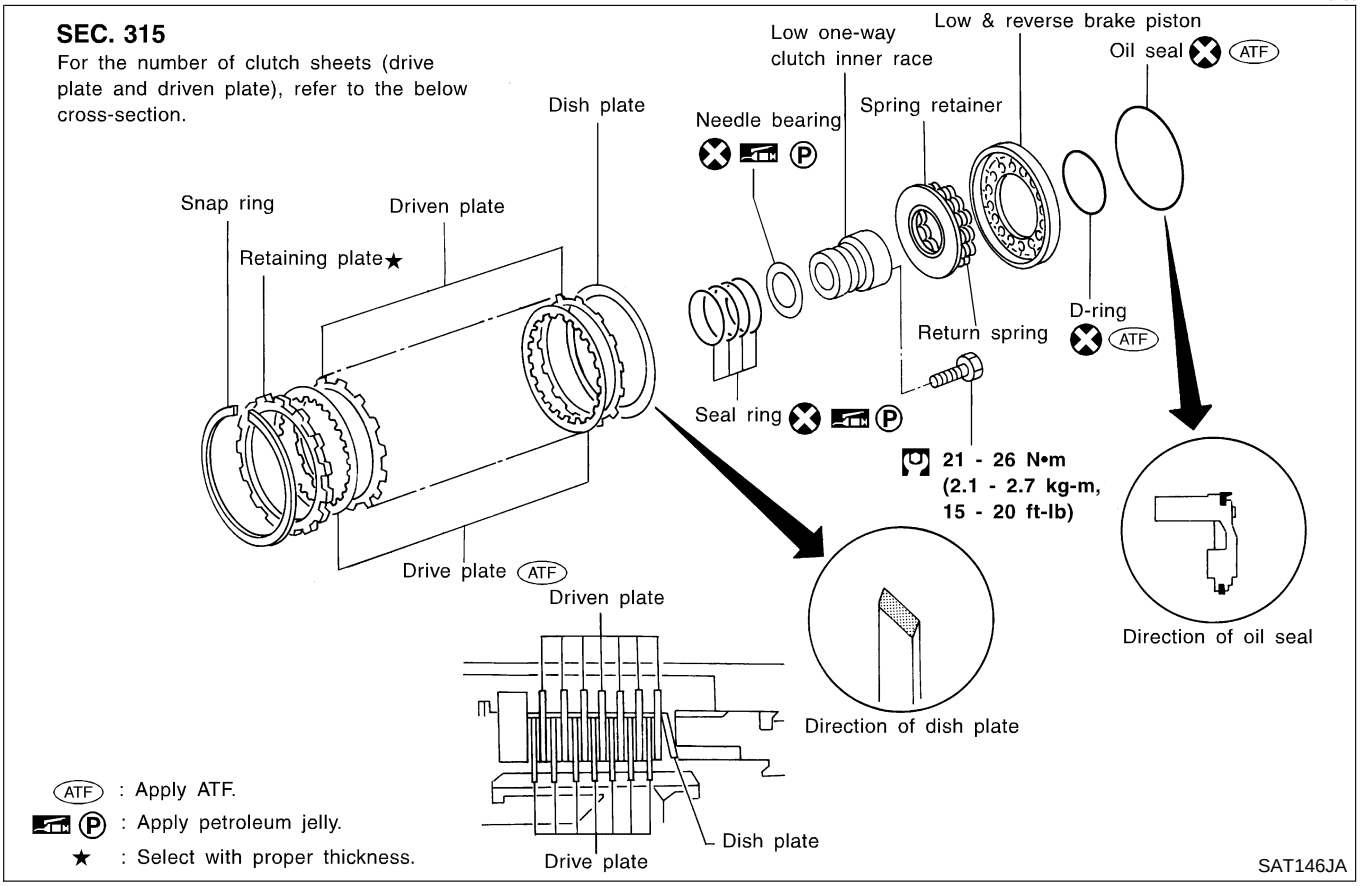

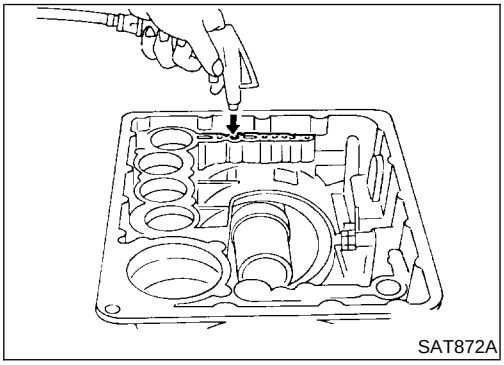

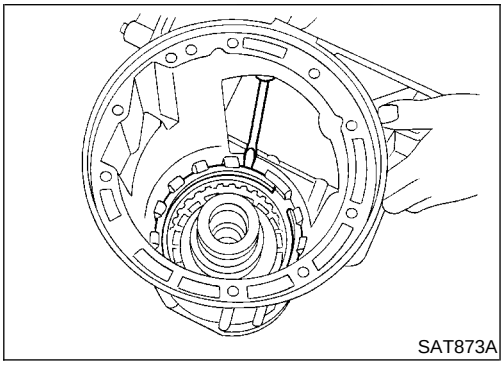

DISASSEMBLY

NBAT0137

1. Check operation of low and reverse brake.

a. Install seal ring onto oil pump cover and install reverse clutch. Apply compressed air to oil hole.

b. Check to see that retaining plate moves to snap ring.

c. If retaining plate does not contact snap ring,

- D-ring might be damaged.
- Oil seal might be damaged.
- Fluid might be leaking past piston check ball.

2. Remove snap ring, low and reverse brake drive plates, driven plates and dish plate.

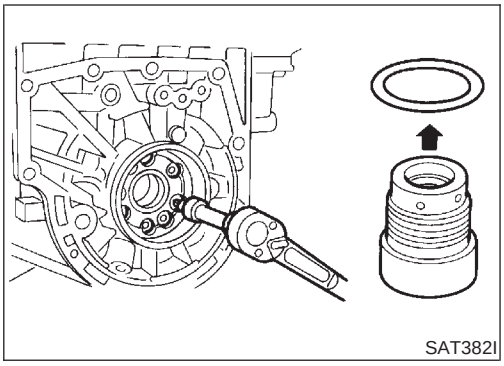

3. Remove low one-way clutch inner race, spring retainer and return spring from transmission case.
4. Remove seal rings from low one-way clutch inner race.
5. Remove needle bearing from low one-way clutch inner race.

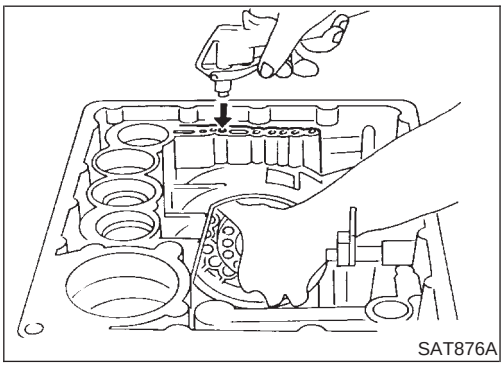

6. Remove low and reverse brake piston using compressed air.
7. Remove oil seal and D-ring from piston.

INSPECTION

NBAT0138

Low and Reverse Brake Snap Ring and Spring Retainer

NBAT0138S01

- Check for deformation, or damage.

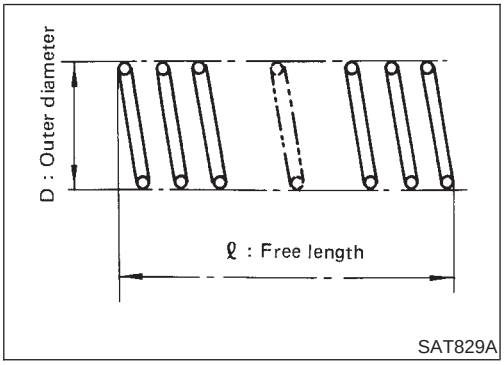

Low and Reverse Brake Return Springs

NBAT0138S02

- Check for deformation or damage. Also measure free length and outside diameter.

  Inspection standard:

  Refer to SDS, AT-340.

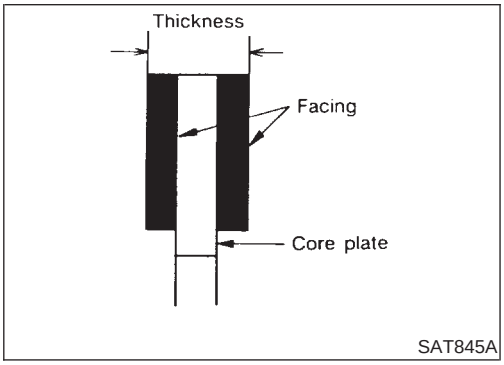

Low and Reverse Brake Drive Plates

NBAT0138S03

- Check facing for burns, cracks or damage.
- Measure thickness of facing.

  Thickness of drive plate:

  Standard value

  1.52 - 1.67 mm (0.0598 - 0.0657 in)

  Wear limit

  1.40 mm (0.0551 in)

- If not within wear limit, replace.

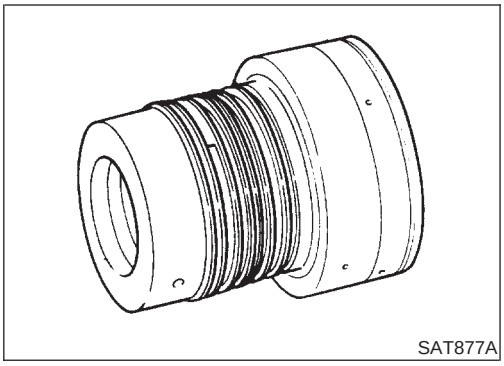
SAT877A

Low One-way Clutch Inner Race

NBAT0138S04

- Check frictional surface of inner race for wear or damage.

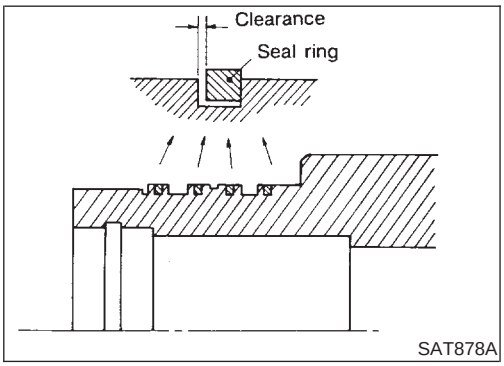

SAT878A

- Install a new seal rings onto low one-way clutch inner race.
- **Be careful not to expand seal ring gap excessively.**
- Measure seal ring-to-groove clearance.

  Inspection standard:

  Standard value: 0.10 - 0.25 mm (0.0039 - 0.0098 in)

  Allowable limit: 0.25 mm (0.0098 in)
- If not within allowable limit, replace low one-way clutch inner race.

ASSEMBLY

NBAT0139

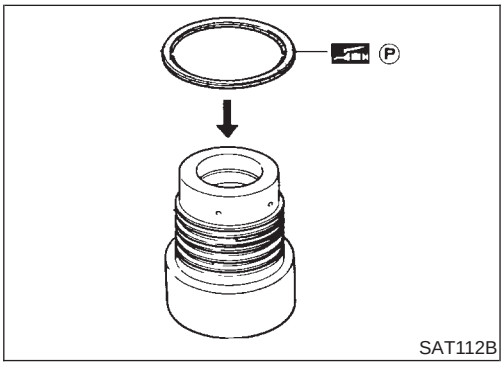

SAT112B

1. Install needle bearing onto one-way clutch inner race.
- **Pay attention to its direction — Black surface goes to rear side.**
- **Apply petroleum jelly to needle bearing.**

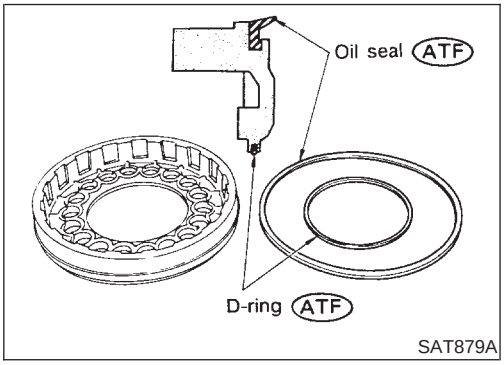

SAT879A

2. Install oil seal and D-ring onto piston.
- **Apply ATF to oil seal and D-ring.**

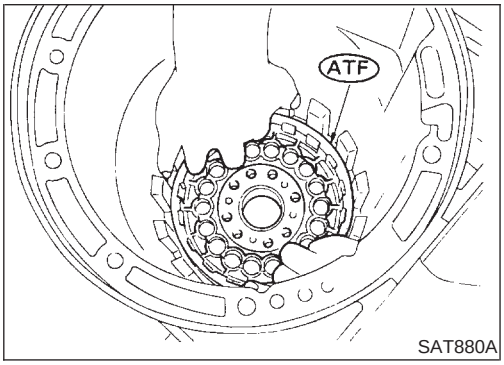

SAT880A

3. Install piston by rotating it slowly and evenly.
- **Apply ATF to inner surface of transmission case.**

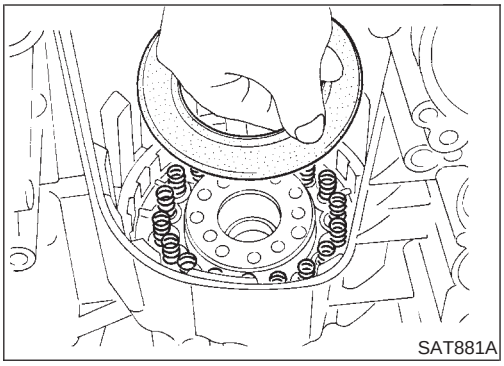

4. Install return springs, spring retainer and low one-way clutch inner race onto transmission case.
5. Install dish plate, low and reverse brake drive plates, driven plates and retaining plate.
6. Install snap ring on transmission case.

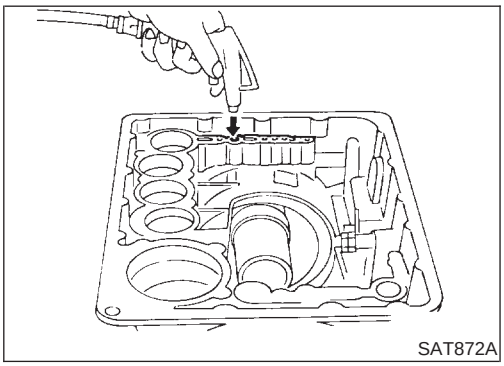

7. Check operation of low and reverse brake clutch piston. Refer to "DISASSEMBLY", AT-307.

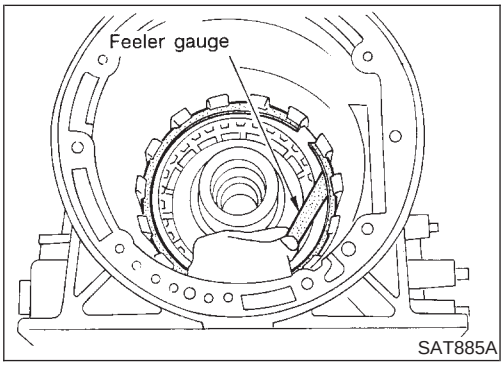

8. Measure clearance between retaining plate and snap ring. If not within allowable limit, select proper retaining plate.

Specified clearance:
Standard
0.8 - 1.1 mm (0.031 - 0.043 in)
Allowable limit
2.3 mm (0.091 in)
Retaining plate:
Refer to SDS, AT-343.

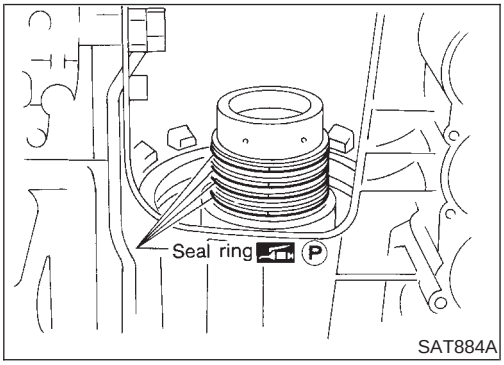

9. Install low one-way clutch inner race seal ring.

- **Apply petroleum jelly to seal ring.**
- **Make sure seal rings are pressed firmly into place and held by petroleum jelly.**

Forward Clutch Drum Assembly

COMPONENTS

NBAT0140

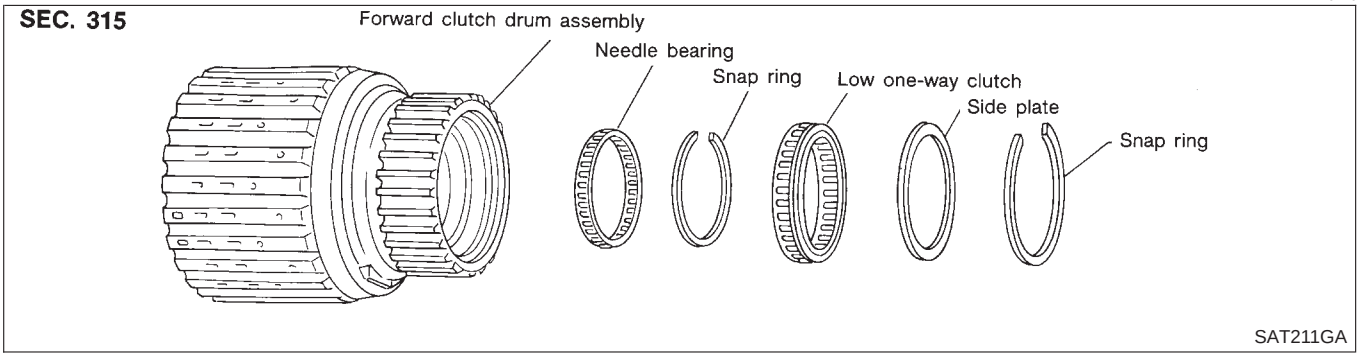

DISASSEMBLY

NBAT0141

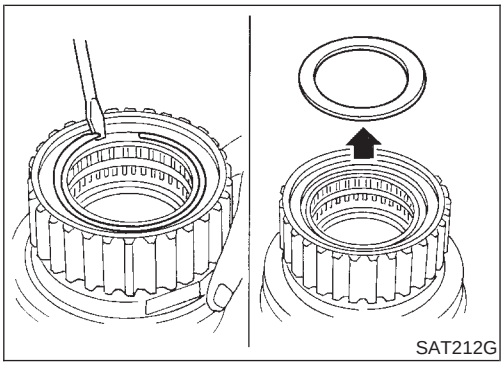

1. Remove snap ring from forward clutch drum.
2. Remove side plate from forward clutch drum.

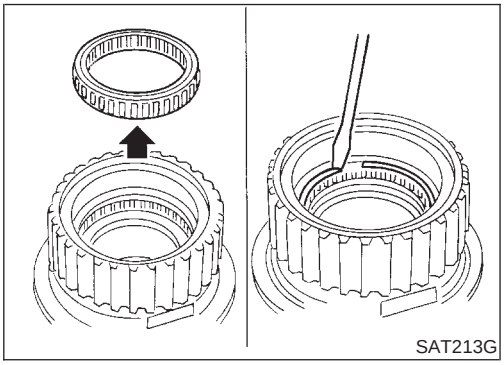

3. Remove low one-way clutch from forward clutch drum.
4. Remove snap ring from forward clutch drum.

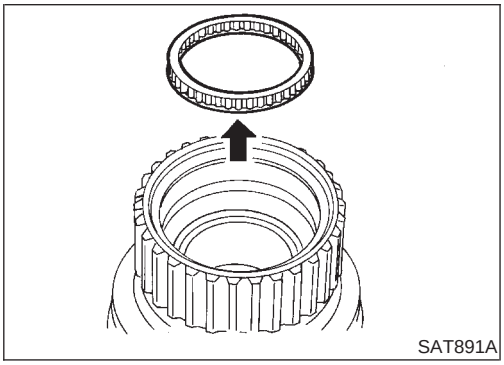

5. Remove needle bearing from forward clutch drum.

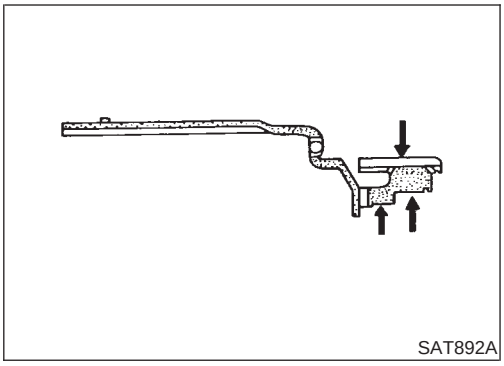
SAT892A

INSPECTION

NBAT0142

Forward Clutch Drum

NBAT0142S01

- Check spline portion for wear or damage.
- Check frictional surfaces of low one-way clutch and needle bearing for wear or damage.

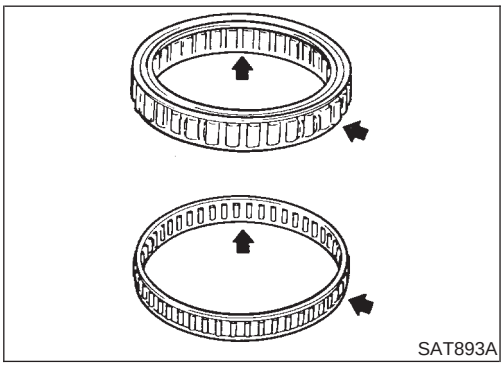
SAT893A

Needle Bearing and Low One-way Clutch

NBAT0142S02

- Check frictional surface for wear or damage.

ASSEMBLY

NBAT0143

1. Install needle bearing in forward clutch drum.
2. Install snap ring onto forward clutch drum.

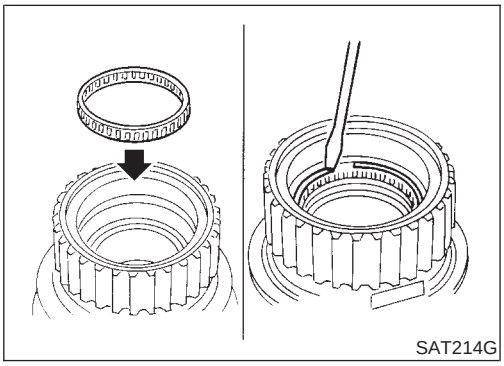
SAT214G

3. Install low one-way clutch onto forward clutch drum by pushing the roller in evenly.

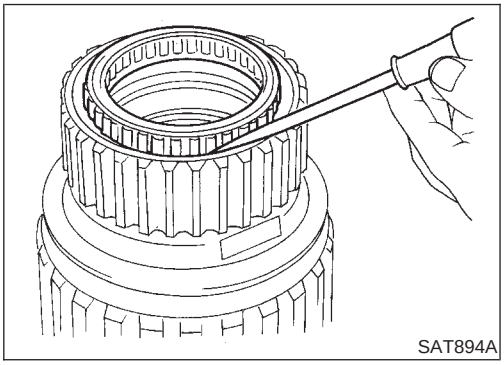
SAT894A

- **Install low one-way clutch with flange facing rearward.**

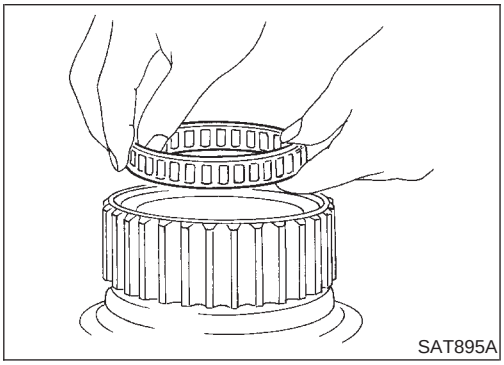
SAT895A

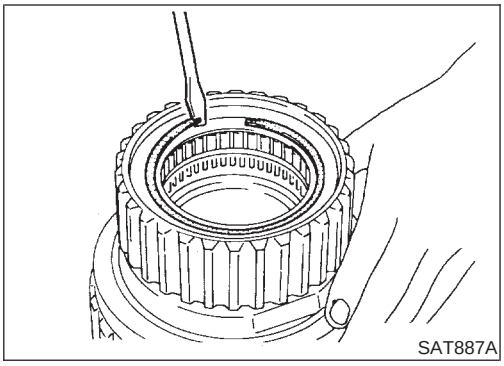

4. Install side plate onto forward clutch drum.
5. Install snap ring onto forward clutch drum.

Rear Internal Gear and Forward Clutch Hub

COMPONENTS

NBAT0144

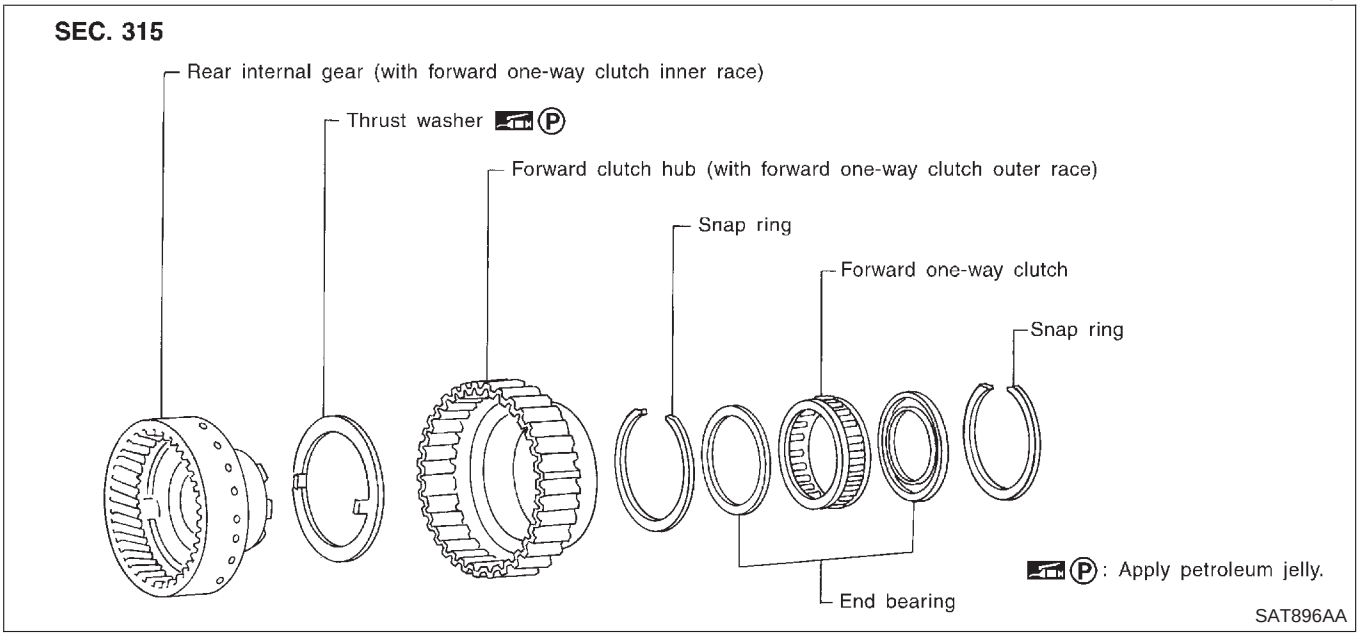

DISASSEMBLY

NBAT0145

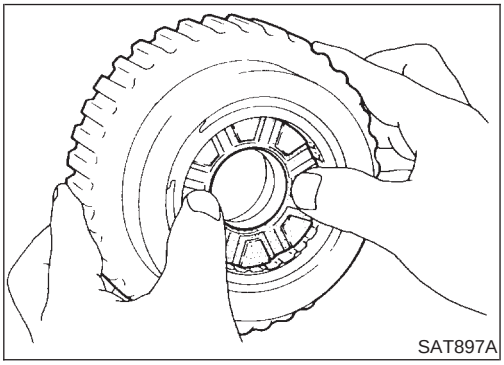

1. Remove rear internal gear by pushing forward clutch hub forward.

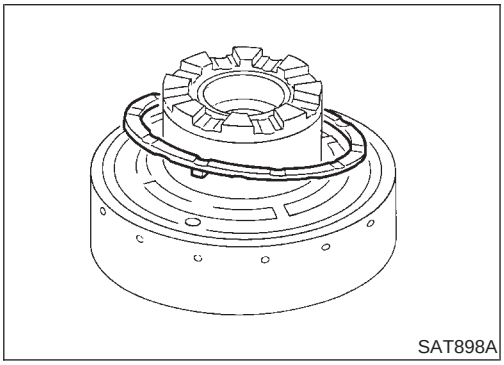

2. Remove thrust washer from rear internal gear.

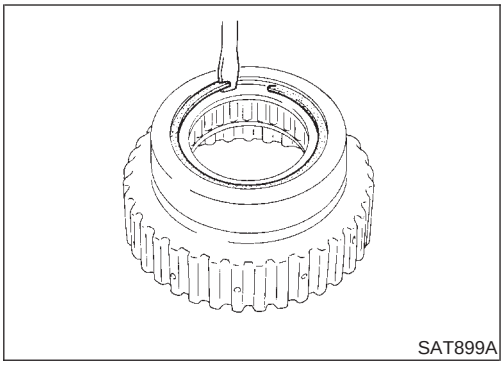
SAT899A

3. Remove snap ring from forward clutch hub.

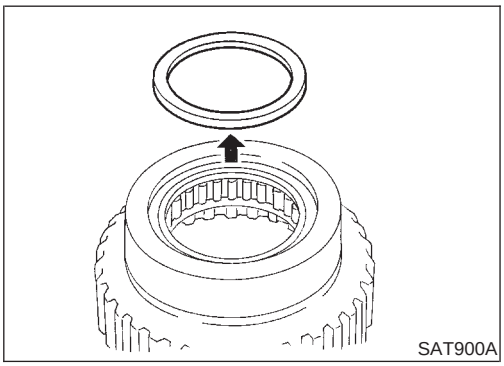
SAT900A

4. Remove end bearing.

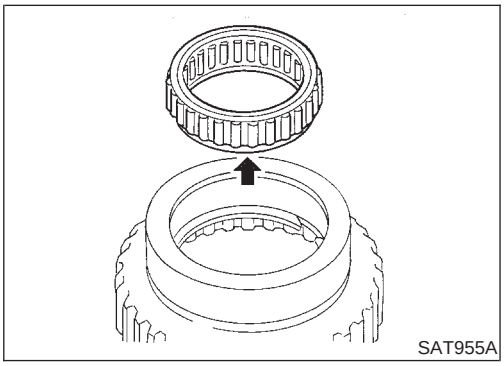
SAT955A

5. Remove forward one-way clutch and end bearing as a unit from forward clutch hub.

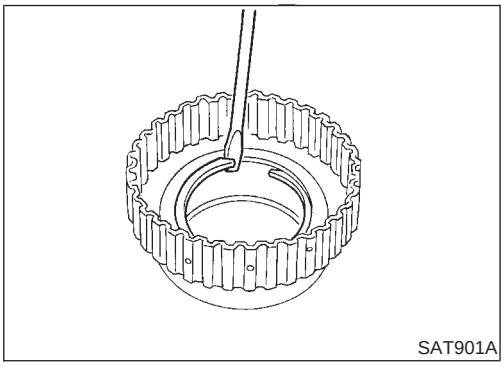
SAT901A

6. Remove snap ring from forward clutch hub.

INSPECTION

NBAT0146

Rear Internal Gear and Forward Clutch Hub

NBAT0146S01

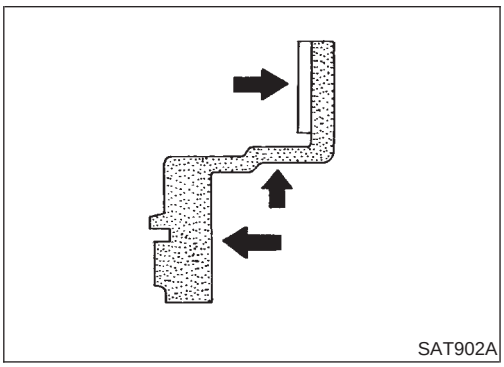
SAT902A

- Check gear for excessive wear, chips or cracks.
- Check frictional surfaces of forward one-way clutch and thrust washer for wear or damage.
- Check spline for wear or damage.

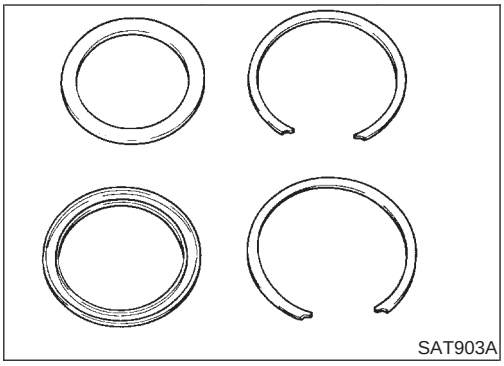
SAT903A

Snap Ring and End Bearing

NBAT0146S02

- Check for deformation or damage.

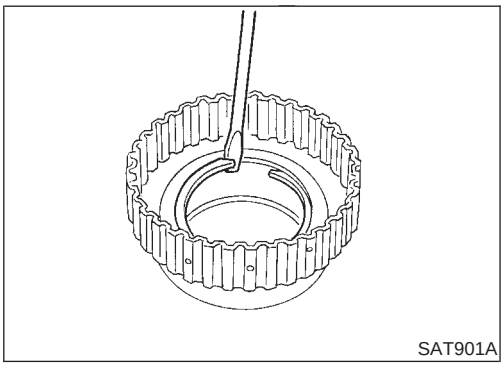
SAT901A

ASSEMBLY

NBAT0147

1. Install snap ring onto forward clutch hub.
2. Install end bearing.

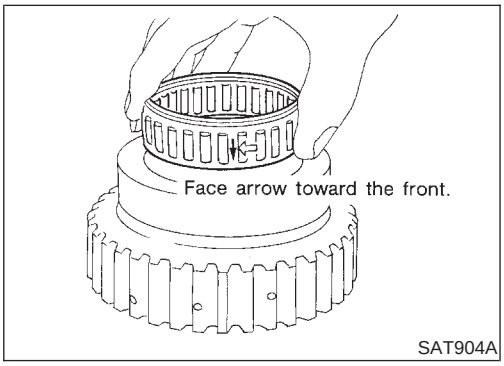

SAT904A

3. Install forward one-way clutch onto clutch hub.
- **Install forward one-way clutch with flange facing rearward.**
4. Install end bearing.
5. Install snap ring onto forward clutch hub.

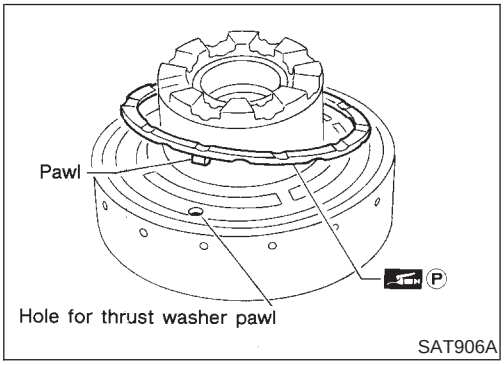

SAT906A

6. Install thrust washer onto rear internal gear.
- **Apply petroleum jelly to thrust washer.**
- **Securely insert pawls of thrust washer into holes in rear internal gear.**

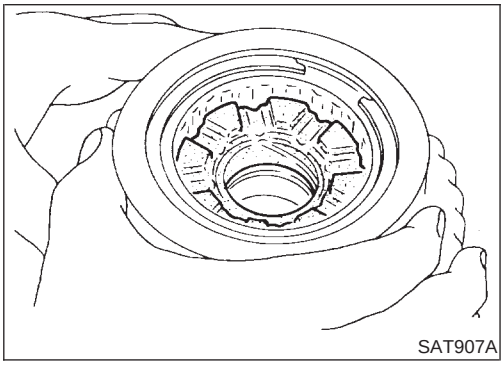
SAT907A

7. Position forward clutch hub in rear internal gear.

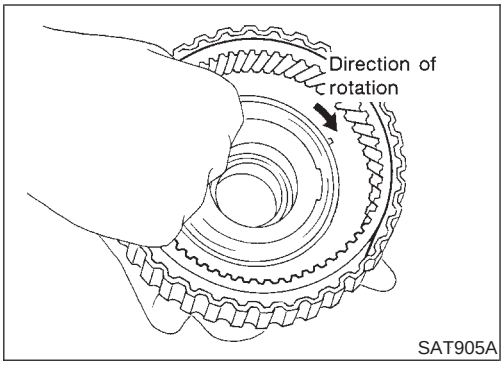

8. After installing, check to assure that forward clutch hub rotates clockwise.

Band Servo Piston Assembly

COMPONENTS

NBAT0148

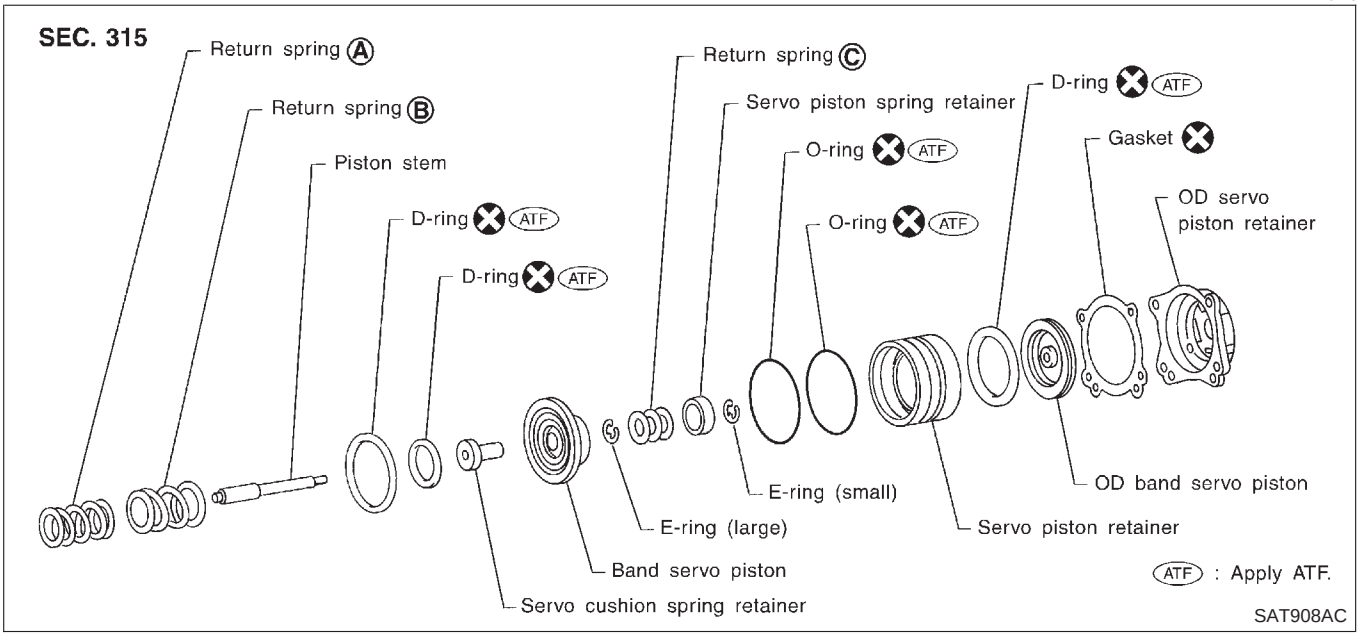

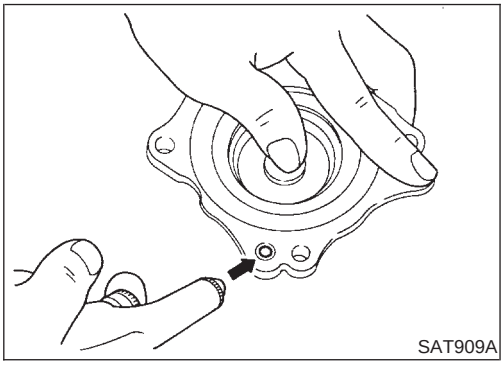

DISASSEMBLY

NBAT0149

1. Block one oil hole in OD servo piston retainer and the center hole in OD band servo piston.
2. Apply compressed air to the other oil hole in piston retainer to remove OD band servo piston from retainer.
3. Remove D-ring from OD band servo piston.

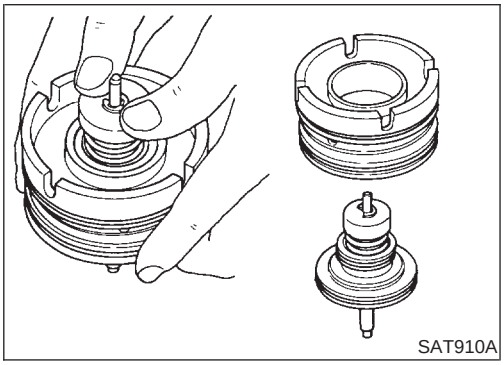

4. Remove band servo piston assembly from servo piston retainer by pushing it forward.

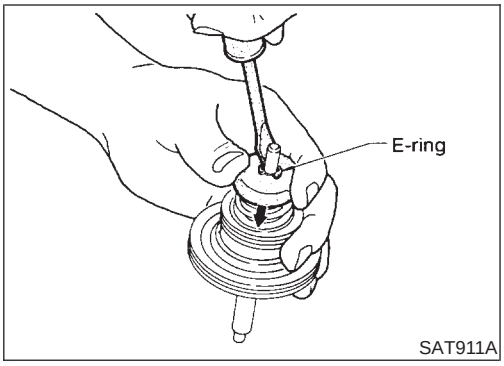

SAT911A

5. Place piston stem end on a wooden block. While pushing servo piston spring retainer down, remove E-ring.

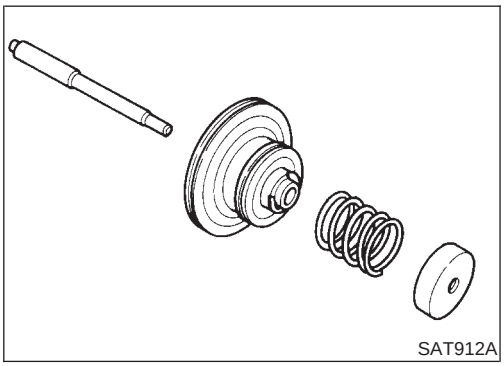
SAT912A

6. Remove servo piston spring retainer, return spring C and piston stem from band servo piston.

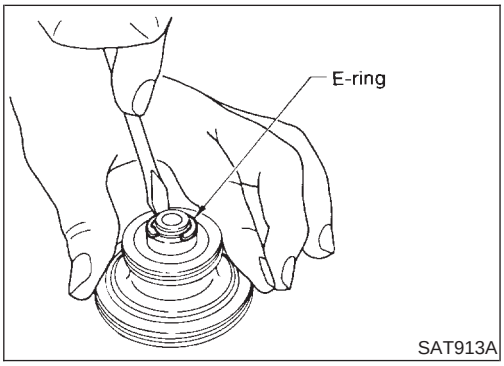

SAT913A

7. Remove E-ring from band servo piston.

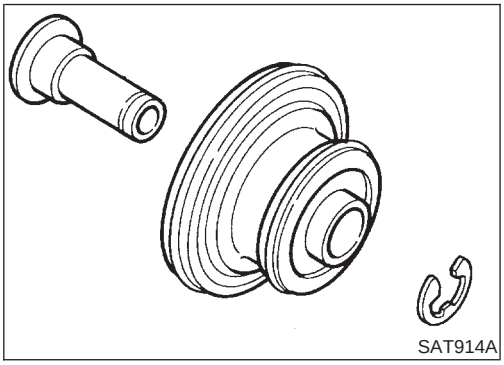
SAT914A

8. Remove servo cushion spring retainer from band servo piston.
9. Remove D-rings from band servo piston.
10. Remove O-rings from servo piston retainer.

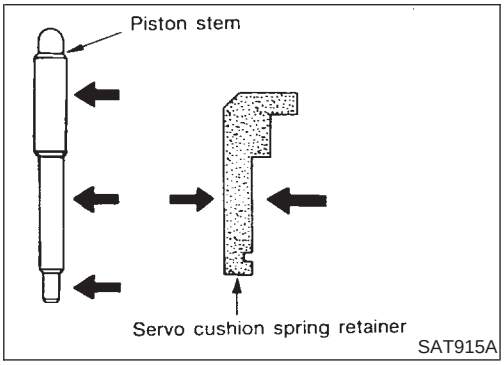

SAT915A

INSPECTION

NBAT0150

Pistons, Retainers and Piston Stem

NBAT0150S01

- Check frictional surfaces for abnormal wear or damage.

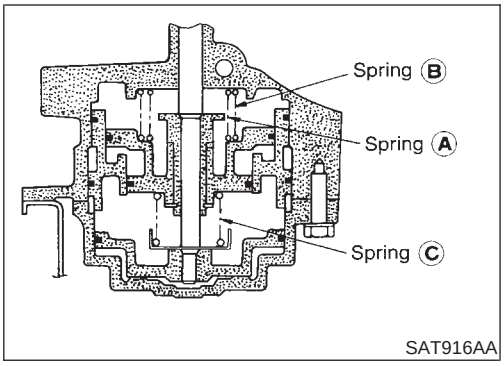

SAT916AA

Return Springs

NBAT0150S02

- Check for deformation or damage. Measure free length and outer diameter.

Inspection standard:
Refer to SDS, AT-340.

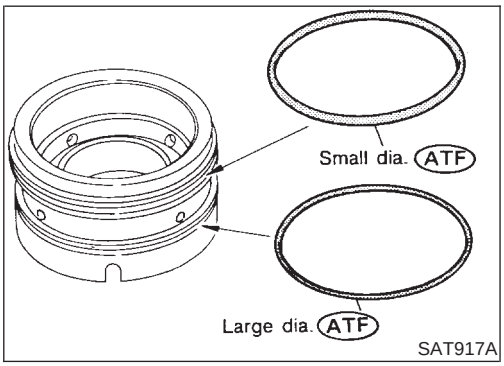

SAT917A

ASSEMBLY

NBAT0151

1. Install O-rings onto servo piston retainer.
- **Apply ATF to O-rings.**
- **Pay attention to position of each O-ring.**

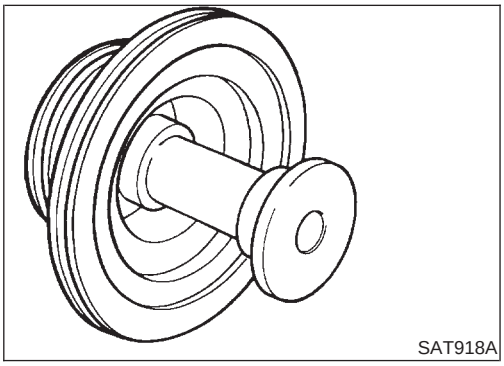
SAT918A

2. Install servo cushion spring retainer onto band servo piston.

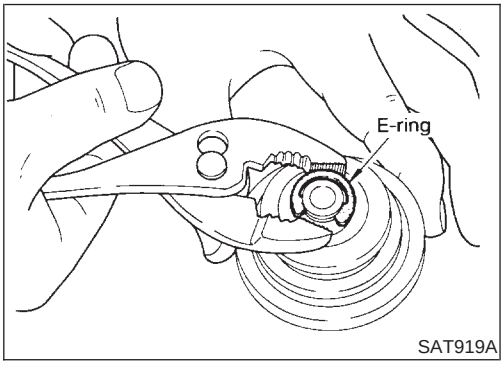

SAT919A

3. Install E-ring onto servo cushion spring retainer.

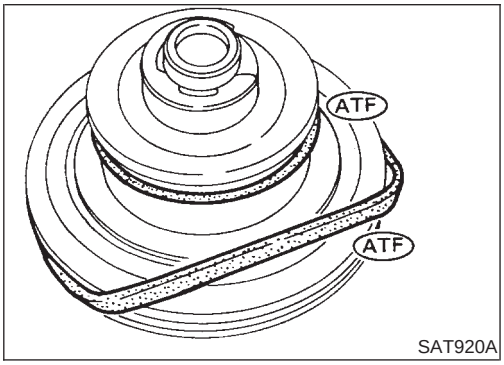

SAT920A

4. Install D-rings onto band servo piston.
- **Apply ATF to D-rings.**

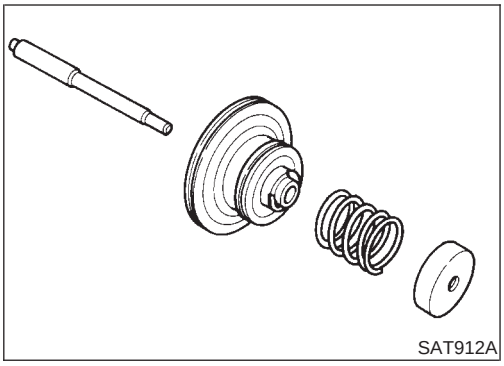
SAT912A

5. Install servo piston spring retainer, return spring C and piston stem onto band servo piston.

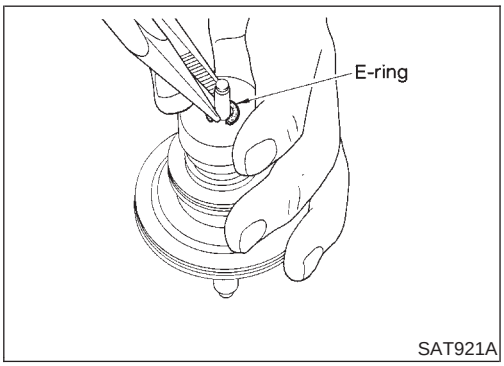

SAT921A

6. Place piston stem end on a wooden block. While pushing servo piston spring retainer down, install E-ring.

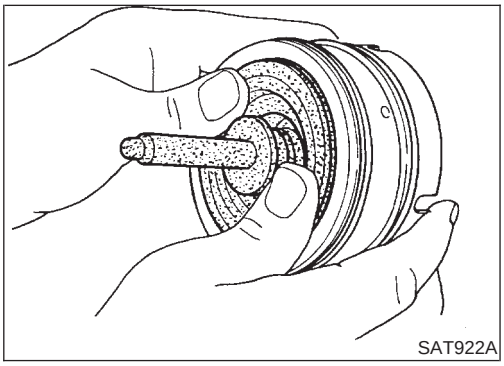
SAT922A

7. Install band servo piston assembly onto servo piston retainer by pushing it inward.

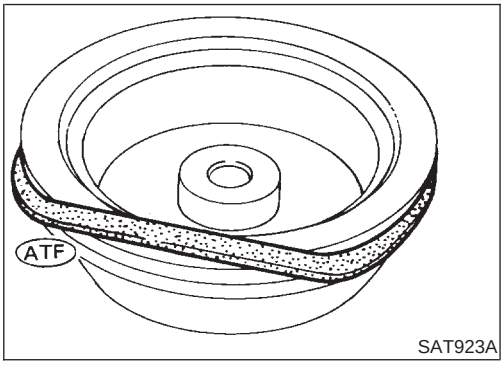

SAT923A

8. Install D-ring on OD band servo piston.
- **Apply ATF to D-ring.**

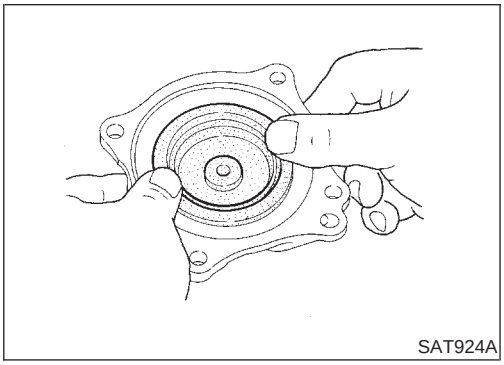
SAT924A

9. Install OD band servo piston onto servo piston retainer by pushing it inward.

Parking Pawl Components

COMPONENTS

NBAT0152

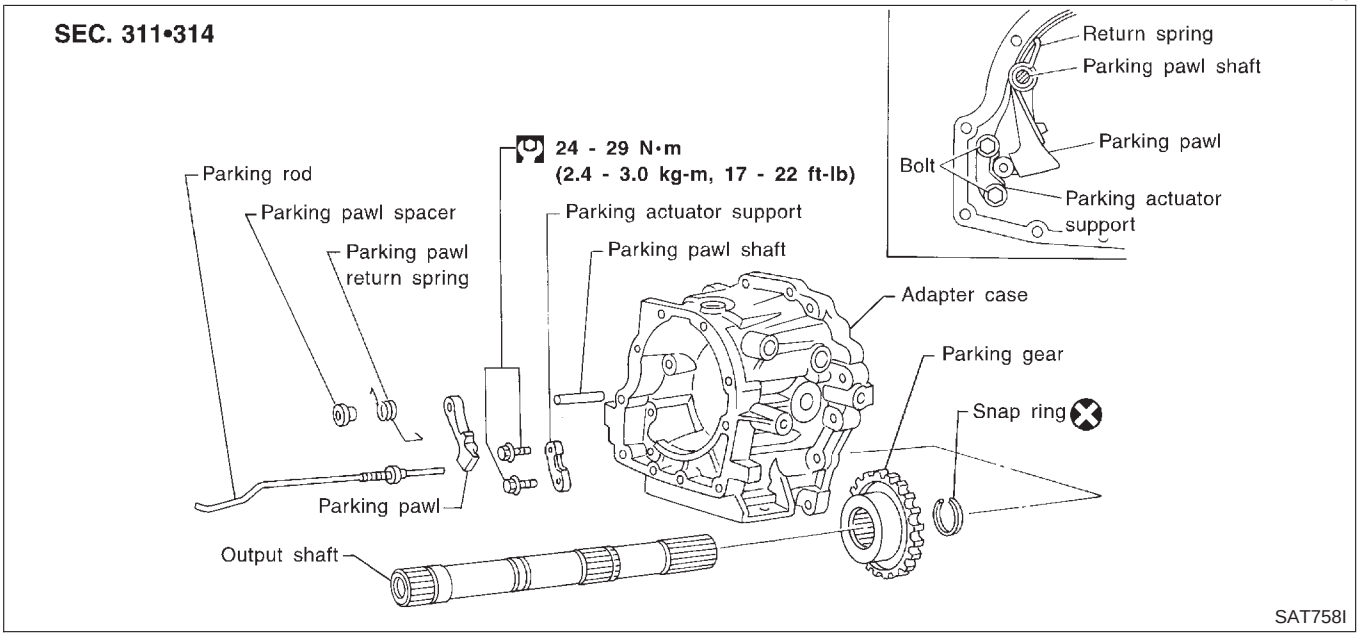

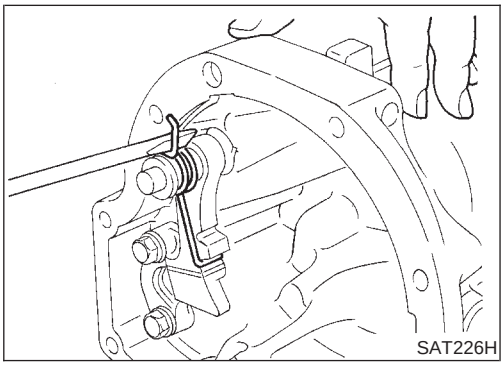

DISASSEMBLY

NBAT0153

1. Slide return spring to the front of adapter case flange.
2. Remove return spring, parking pawl spacer and parking pawl from adapter case.
3. Remove parking pawl shaft from adapter case.

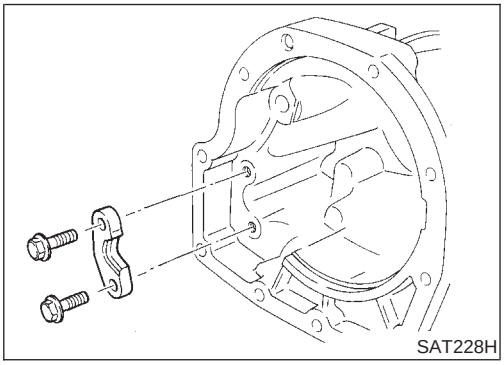

4. Remove parking actuator support from adapter case.

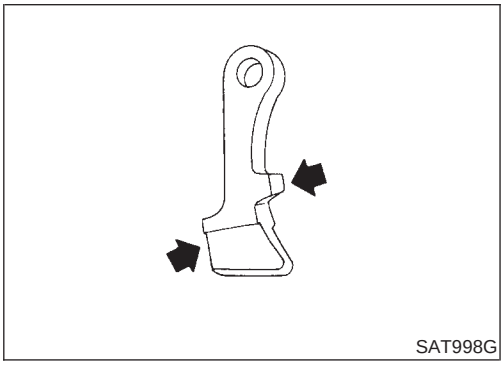

INSPECTION

NBAT0209

Parking Pawl and Parking Actuator Support

NBAT0209S01

- Check contact surface of parking rod for wear.

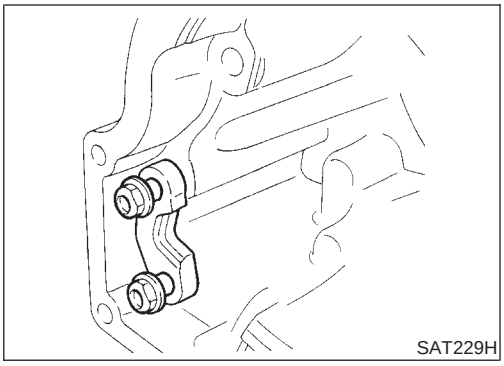

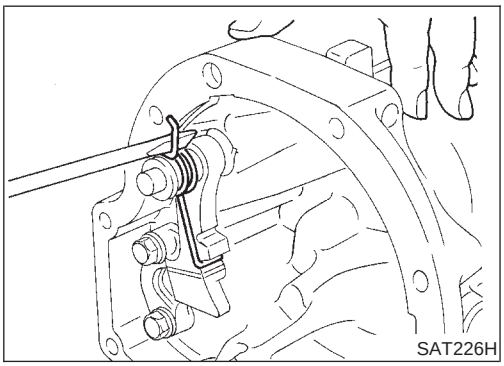

ASSEMBLY

NBAT0154

1. Install parking actuator support onto adapter case.
2. Insert parking pawl shaft into adapter case.
3. Install return spring, pawl spacer and parking pawl onto parking pawl shaft.
4. Bend return spring upward and install it onto adapter case.

Assembly (1)

NBAT0155

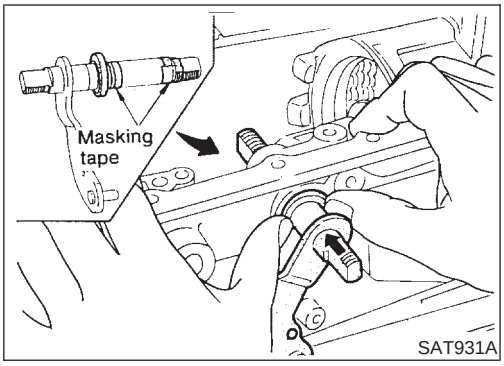

1. Install manual shaft components.

a. Install oil seal onto manual shaft.

- **Apply ATF to oil seal.**
- **Wrap threads of manual shaft with masking tape.**

b. Insert manual shaft and oil seal as a unit into transmission case.

c. Remove masking tape.

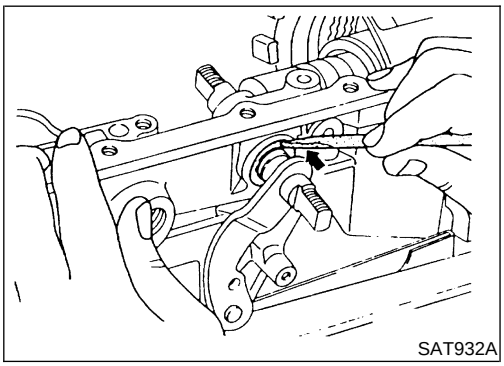

d. Push oil seal evenly and install it onto transmission case.

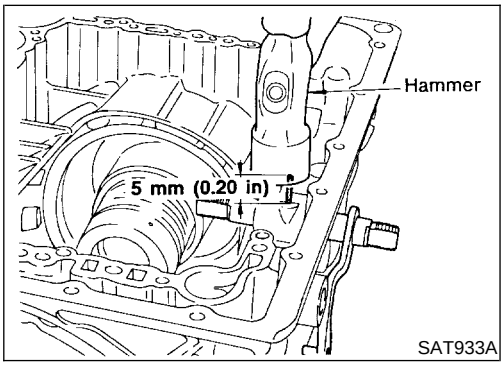

e. Align groove in shaft with retaining pin hole, then retaining pin into position as shown in figure at left.

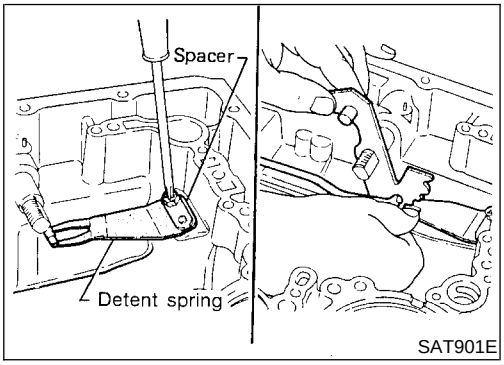

f. Install detent spring and spacer.

g. While pushing detent spring down, install manual plate onto manual shaft.

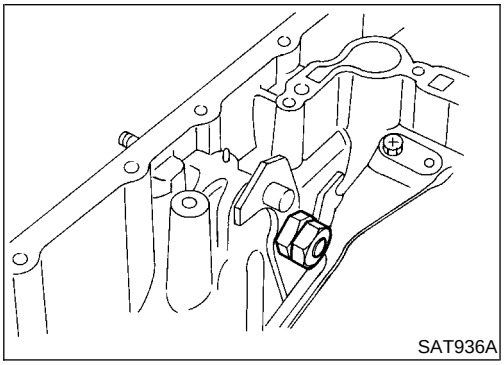

h. Install lock nuts onto manual shaft.

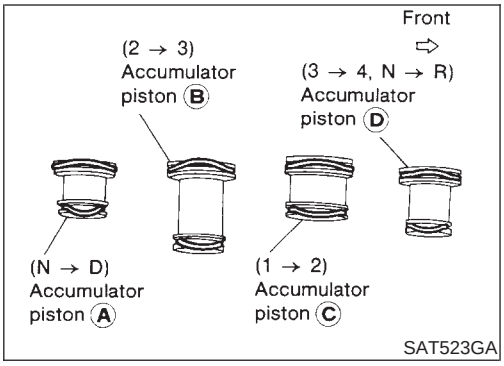

2. Install accumulator piston.

a. Install O-rings onto accumulator piston.

- **Apply ATF to O-rings.**

Accumulator piston O-rings

Unit: mm (in)

Accumulator	A	B	C	D
Small diameter end	29 (1.14)	32 (1.26)	45 (1.77)	29 (1.14)
Large diameter end	45 (1.77)	50 (1.97)	50 (1.97)	45 (1.77)

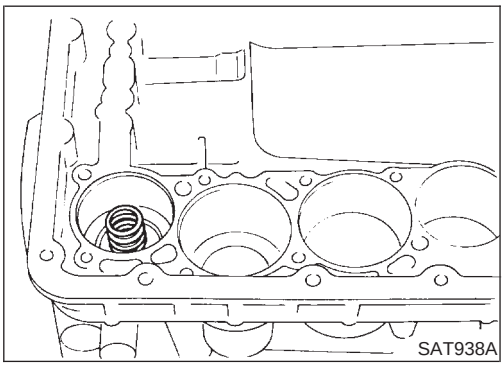

b. Install return spring for accumulator A onto transmission case.

Free length of return spring:
Refer to SDS, AT-340.

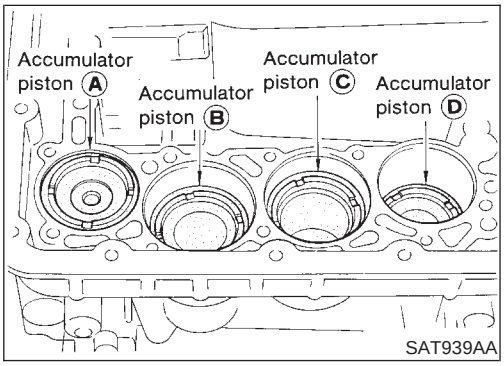

c. Install accumulator pistons A, B, C and D.

- **Apply ATF to transmission case.**

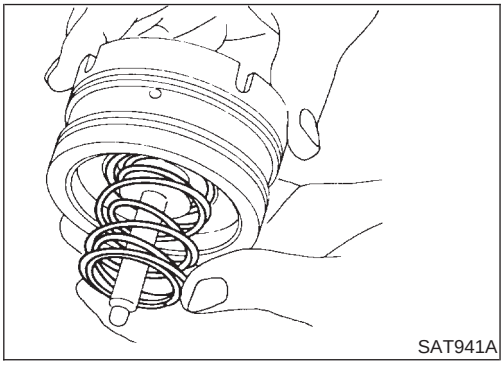

3. Install band servo piston.

a. Install return springs onto servo piston.

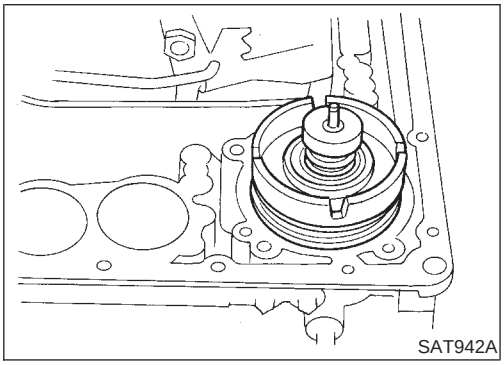

b. Install band servo piston onto transmission case.

- **Apply ATF to O-ring of band servo piston and transmission case.**

c. Install gasket for band servo onto transmission case.

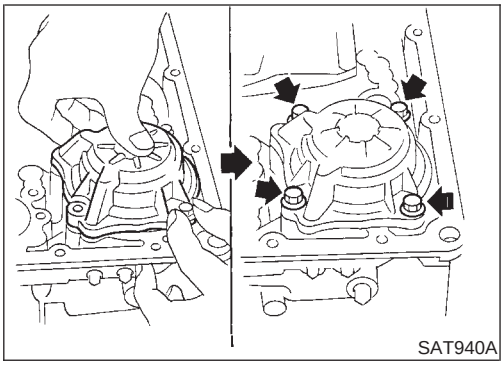

d. Install band servo retainer onto transmission case.

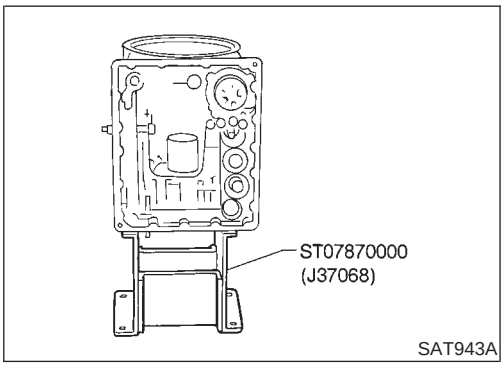

4. Install rear side clutch and gear components.

a. Place transmission case in vertical position.

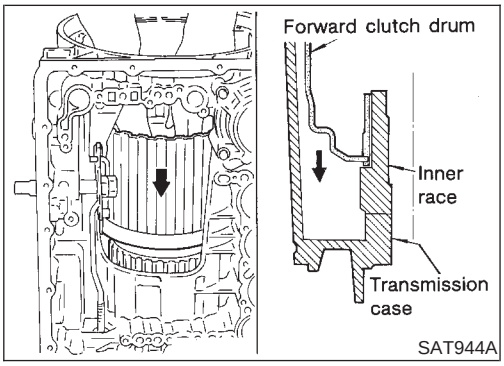

b. Slightly lift forward clutch drum assembly. Then slowly rotate it clockwise until its hub passes fully over clutch inner race inside transmission case.

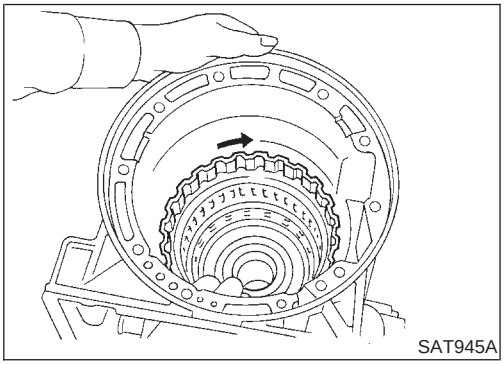

c. Check to be sure that rotation direction of forward clutch assembly is correct.

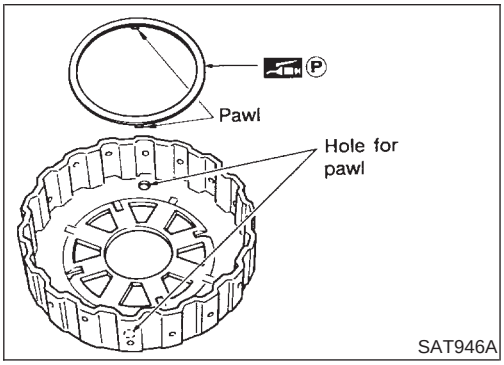

d. Install thrust washer onto front of overrun clutch hub.

- **Apply petroleum jelly to the thrust washer.**
- **Insert pawls of thrust washer securely into holes in overrun clutch hub.**

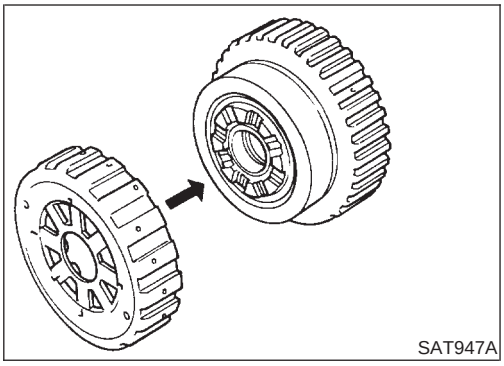

e. Install overrun clutch hub onto rear internal gear assembly.

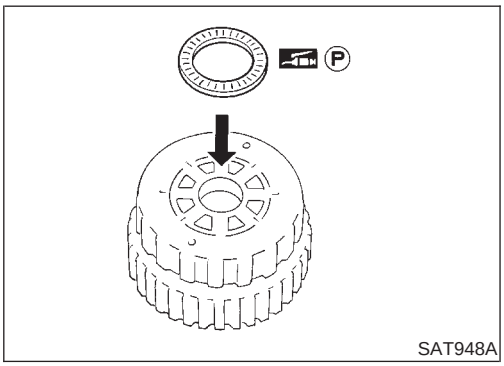

f. Install needle bearing onto rear of overrun clutch hub.

- **Apply petroleum jelly to needle bearing.**

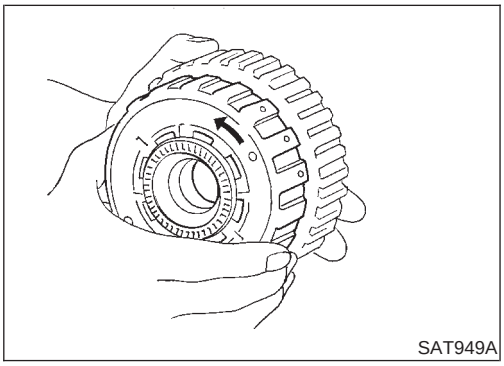

g. Check that overrun clutch hub rotates as shown while holding forward clutch hub.

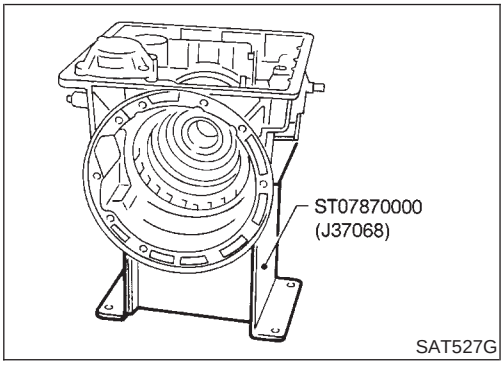

h. Place transmission case into horizontal position.

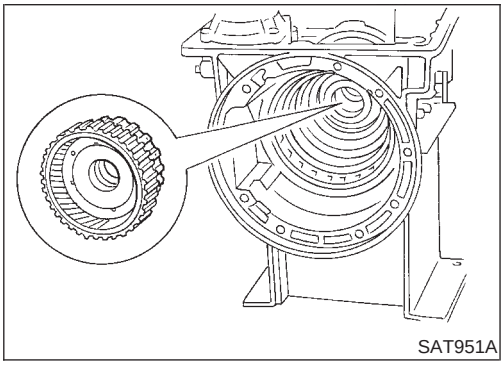

i. Install rear internal gear, forward clutch hub and overrun clutch hub as a unit onto transmission case.

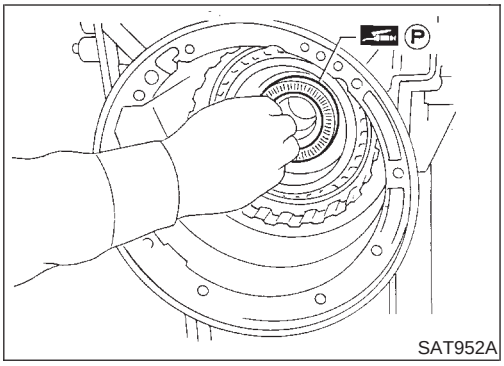

j. Install needle bearing onto rear internal gear.

- **Apply petroleum jelly to needle bearing.**

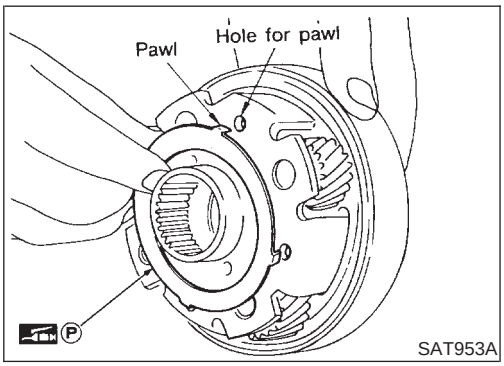

k. Install bearing race onto rear of front internal gear.

- **Apply petroleum jelly to bearing race.**
- **Securely engage pawls of bearing race with holes in front internal gear.**

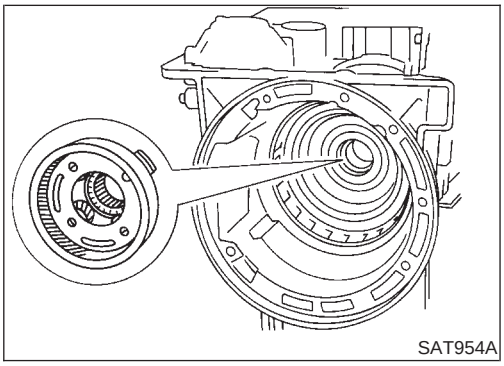

l. Install front internal gear on transmission case.

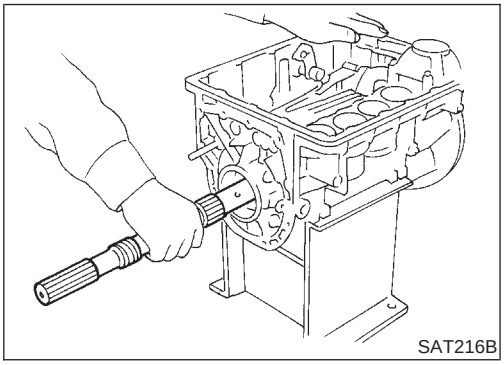

5. Install output shaft and parking gear.

a. Insert output shaft from rear of transmission case while slightly lifting front internal gear.

- **Do not force output shaft against front of transmission case.**

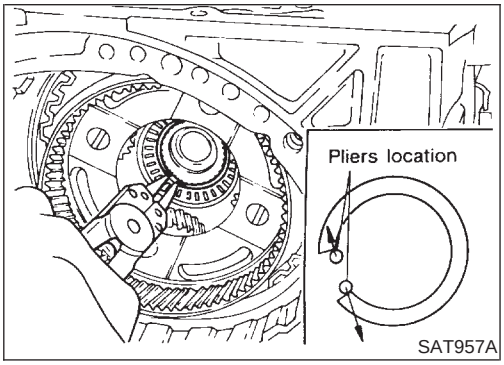

b. Carefully push output shaft against front of transmission case. Install snap ring on front of output shaft.

- **Check to be sure output shaft cannot be removed in rear direction.**

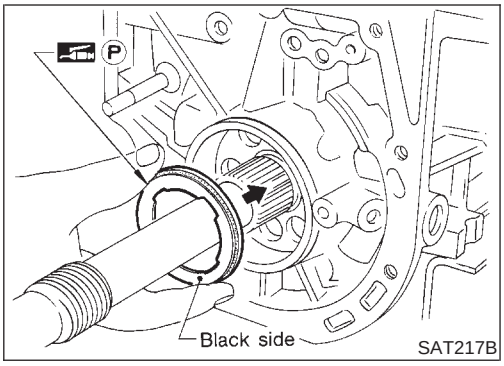

SAT217B

c. Install needle bearing on transmission case.
- **Pay attention to its direction — Black side goes to rear.**
- **Apply petroleum jelly to needle bearing.**

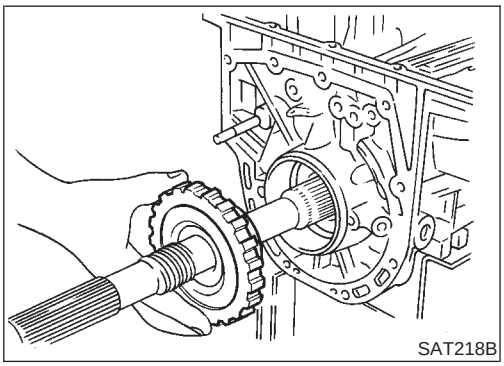
SAT218B

d. Install parking gear on transmission case.

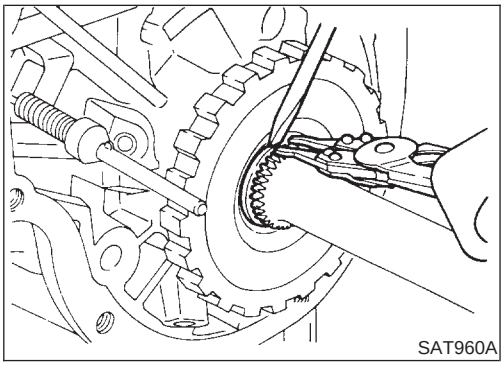
SAT960A

e. Install snap ring on rear of output shaft.
- **Check to be sure output shaft cannot be removed in forward direction.**

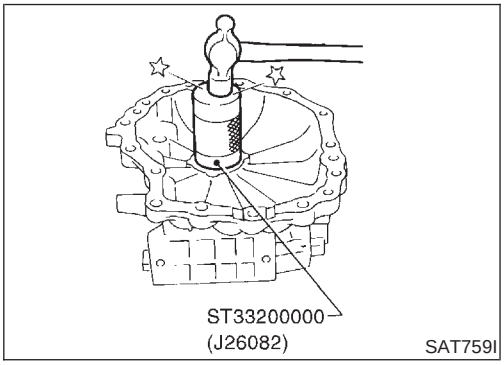

SAT759I

6. Install adapter case.

a. Install oil seal on adapter case.
- **Apply ATF to oil seal.**

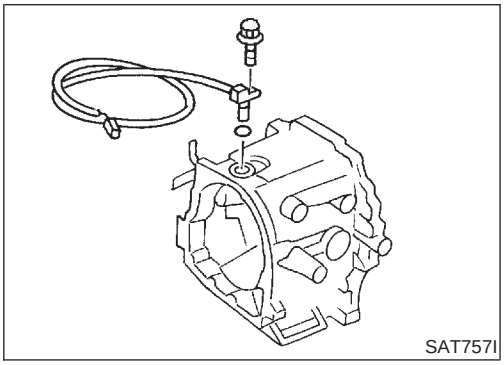
SAT757I

b. Install O-ring on revolution sensor.
- **Apply ATF to O-ring.**

c. Install revolution sensor on adapter case.

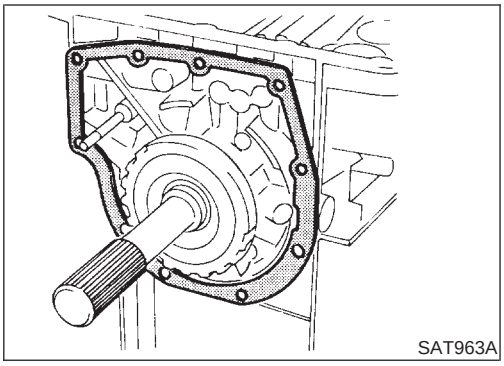

d. Install adapter case gasket on transmission case.

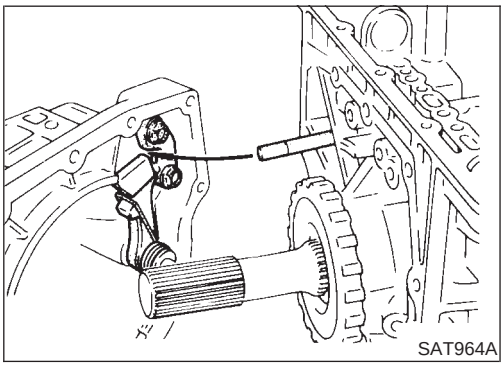

e. Install parking rod on transmission case.

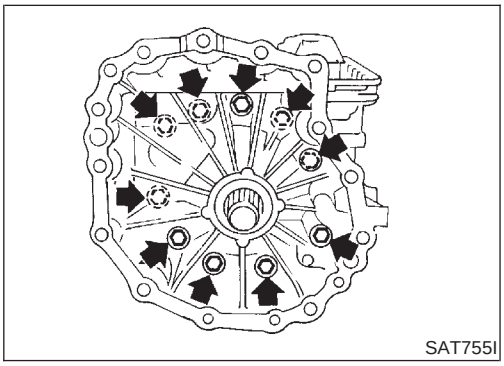

f. Install adapter case on transmission case.

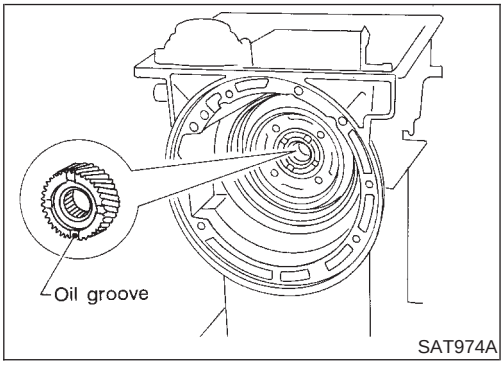

7. Install front side clutch and gear components.

a. Install rear sun gear on transmission case.

- **Pay attention to its direction.**

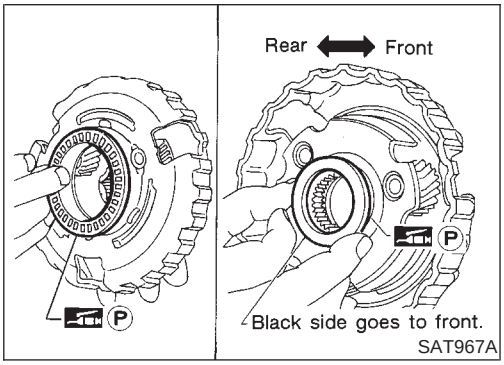

b. Make sure needle bearing is on front of front planetary carrier.

- **Apply petroleum jelly to needle bearing.**

c. Make sure needle bearing is on rear of front planetary carrier.

- **Apply petroleum jelly to bearing.**
- **Pay attention to its direction — Black side goes to front.**

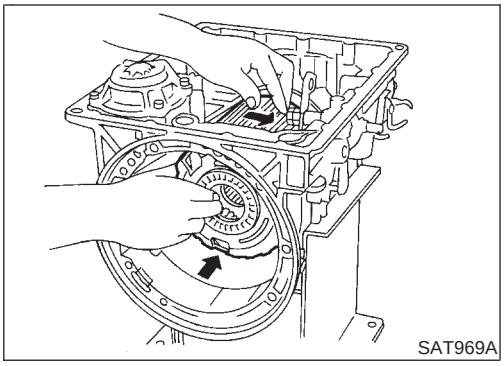

d. While rotating forward clutch drum clockwise, install front planetary carrier on forward clutch drum.

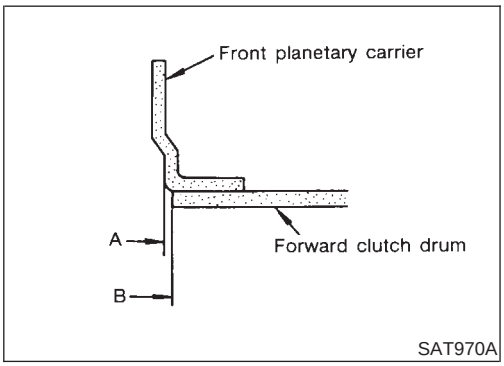

- **Check that portion A of front planetary carrier protrudes approximately 2 mm (0.08 in) beyond portion B of forward clutch assembly.**

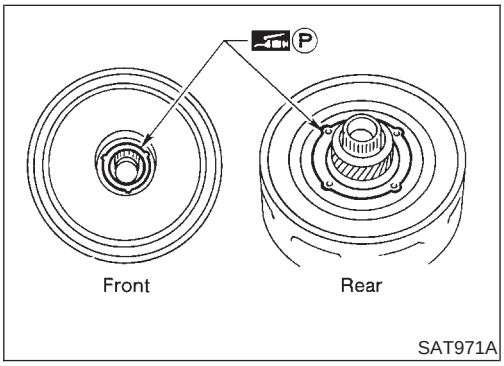

e. Make sure bearing races are on front and rear of clutch pack.

- **Apply petroleum jelly to bearing races.**
- **Securely engage pawls of bearing races with holes in clutch pack.**

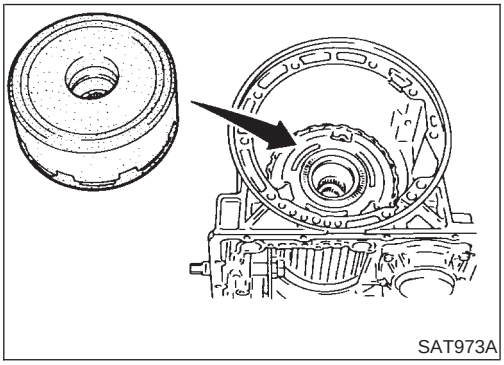

f. Install clutch pack into transmission case.

Adjustment

=NBAT0156

When any parts listed in the following table are replaced, total end play or reverse clutch end play must be adjusted.

Part name	Total end play	Reverse clutch end play
Transmission case	●	●
Low one-way clutch inner race	●	●
Overrun clutch hub	●	●
Rear internal gear	●	●
Rear planetary carrier	●	●
Rear sun gear	●	●
Front planetary carrier	●	●
Front sun gear	●	●
High clutch hub	●	●
High clutch drum	●	●
Oil pump cover	●	●
Reverse clutch drum	—	●

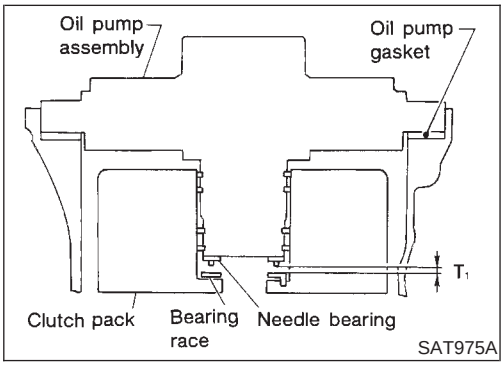

1. Adjust total end play.

   Total end play "T_1":
   0.25 - 0.55 mm (0.0098 - 0.0217 in)

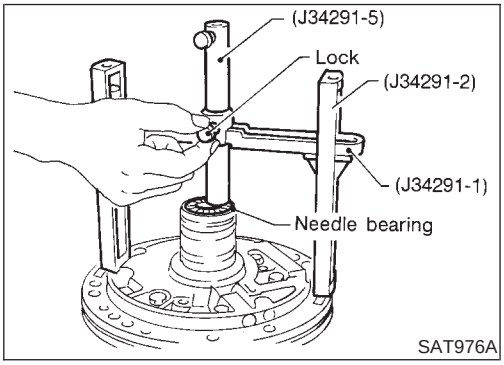

a. With needle bearing installed, place J34291-1 (bridge), J34291-2 (legs) and the J34291-5 (gauging cylinder) onto oil pump. The long ends of legs should be placed firmly on machined surface of oil pump assembly. The gauging cylinder should rest on top of the needle bearing. Lock gauging cylinder in place with set screw.

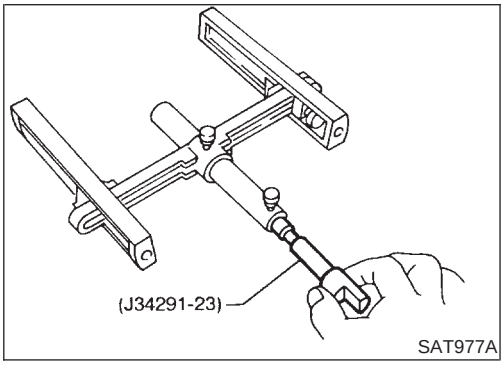

b. Install J34291-23 (gauging plunger) into gauging cylinder.

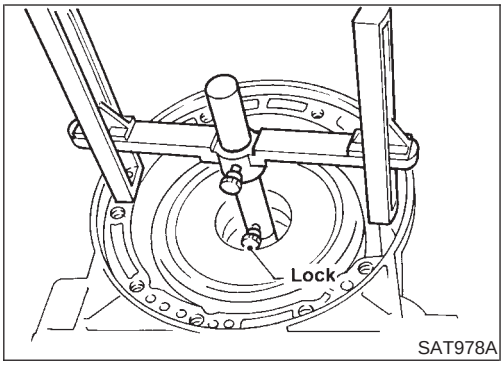

SAT978A

c. Install original bearing race inside reverse clutch drum. Place shim selecting gauge with its legs on machined surface of transmission case (no gasket). Allow gauging plunger to rest on bearing race. Lock gauging plunger in place with set screw.

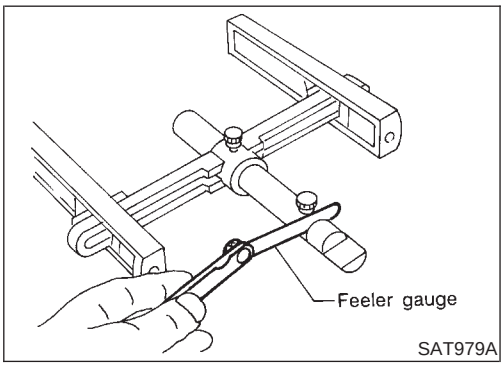

SAT979A

d. Remove Tool and use feeler gauge to measure gap between gauging cylinder and gauging plunger. This measurement should give exact total end play.

Total end play "T_1":

0.25 - 0.55 mm (0.0098 - 0.0217 in)

- If end play is out of specification, decrease or increase thickness of oil pump cover bearing race as necessary.

Available oil pump cover bearing race:

Refer to SDS, AT-343.

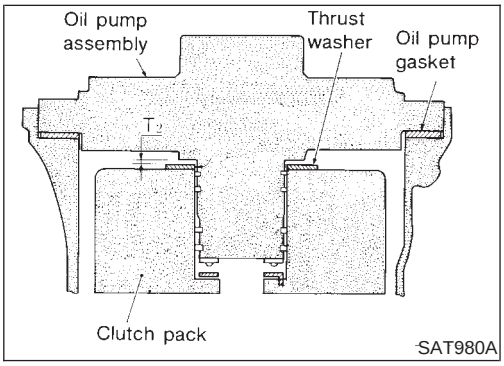

SAT980A

2. Adjust reverse clutch drum end play.

Reverse clutch drum end play "T_2":

0.55 - 0.90 mm (0.0217 - 0.0354 in)

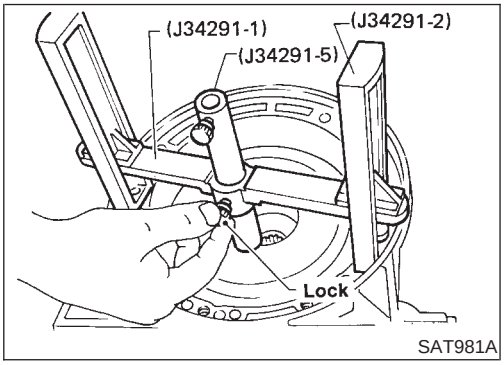

SAT981A

a. Place J34291-1 (bridge), J34291-2 (legs) and J34291-5 (gauging cylinder) on machined surface of transmission case (no gasket). Allow gauging cylinder to rest on front thrust surface of reverse clutch drum. Lock cylinder in place with set screw.

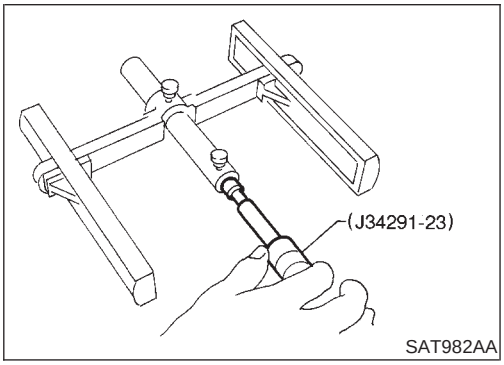

SAT982AA

b. Install J34291-23 (gauging plunger) into gauging cylinder.

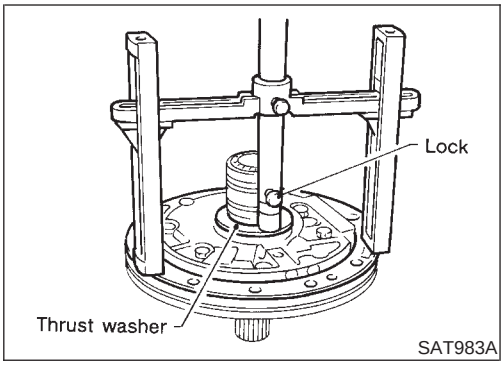

c. Install original thrust washer on oil pump. Place shim setting gauge legs onto machined surface of oil pump assembly. Allow gauging plunger to rest on thrust washer. Lock plunger in place with set screw.

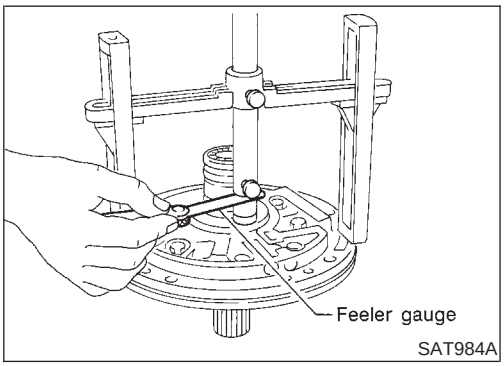

d. Use feeler gauge to measure gap between gauging plunger and gauging cylinder. This measurement should give you exact reverse clutch drum end play.

Reverse clutch drum end play "T_2":
0.55 - 0.90 mm (0.0217 - 0.0354 in)

- If end play is out of specification, decrease or increase thickness of oil pump thrust washer as necessary.

Available oil pump thrust washer:
Refer to SDS, AT-344.

Assembly (2)

NBAT0157

1. Install brake band and band strut.

a. Install band strut on brake band.

- **Apply petroleum jelly to band strut.**

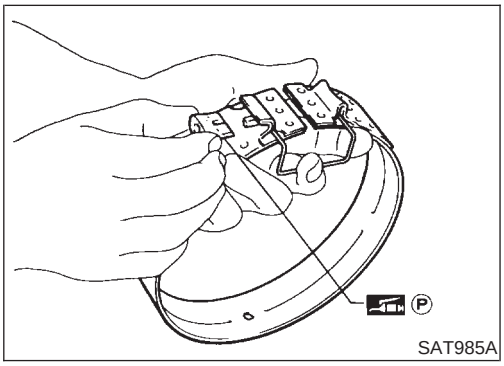

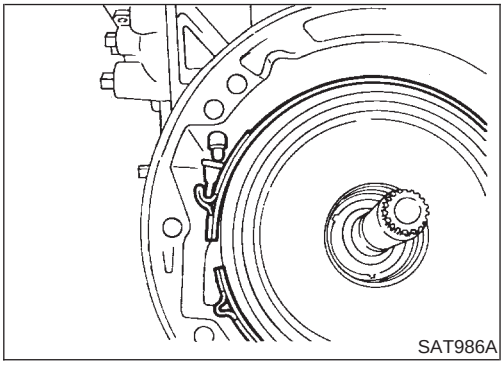

b. Place brake band on periphery of reverse clutch drum, and insert band strut into end of band servo piston stem.

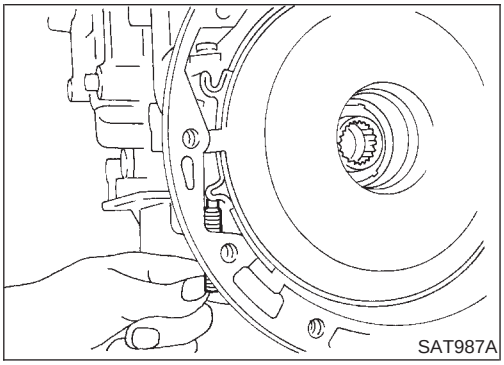

c. Install anchor end bolt on transmission case. Then, tighten anchor end bolt just enough so that reverse clutch drum (clutch pack) will not tilt forward.

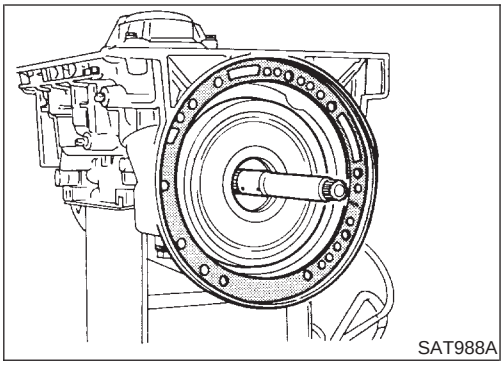

2. Install input shaft on transmission case.
- **Pay attention to its direction — O-ring groove side is front.**

3. Install gasket on transmission case.

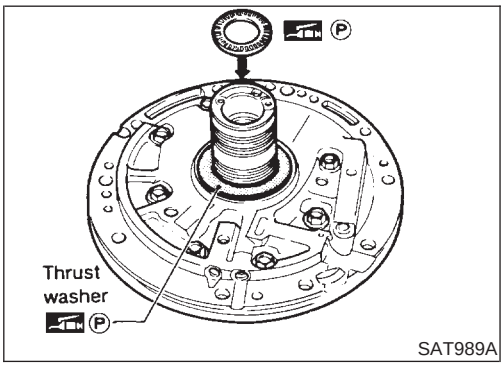

4. Install oil pump assembly.

a. Install needle bearing on oil pump assembly.
- **Apply petroleum jelly to the needle bearing.**

b. Install selected thrust washer on oil pump assembly.
- **Apply petroleum jelly to thrust washer.**

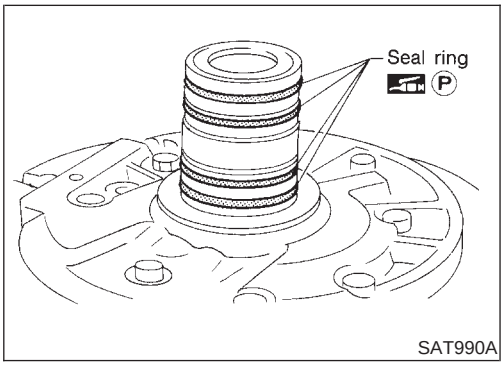

c. Carefully install seal rings into grooves and press them into the petroleum jelly so that they are a tight fit.

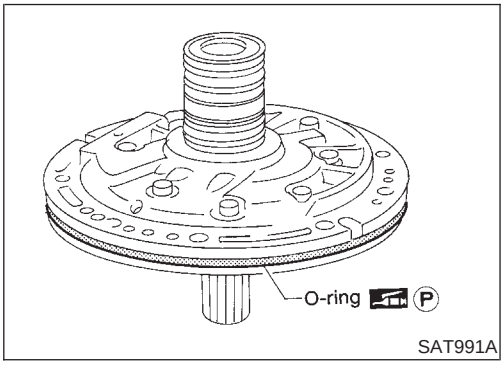

d. Install O-ring on oil pump assembly.
- **Apply petroleum jelly to O-ring.**

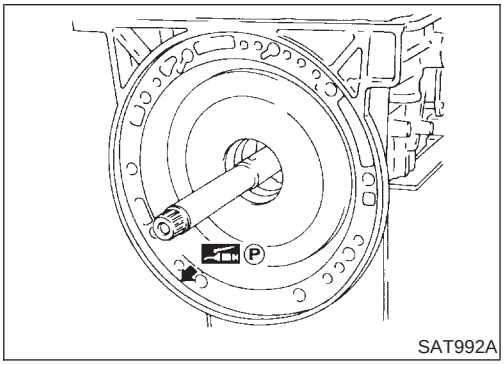

e. Apply petroleum jelly to mating surface of transmission case and oil pump assembly.

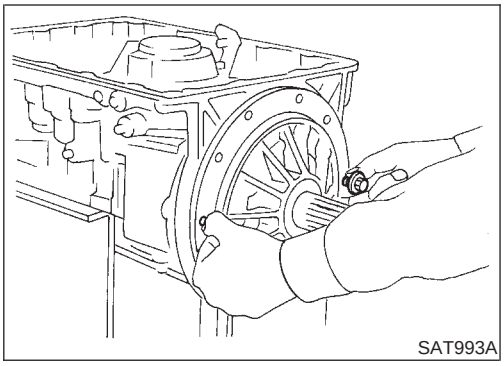

f. Install oil pump assembly.

- **Install two converter housing securing bolts in bolt holes in oil pump assembly as guides.**

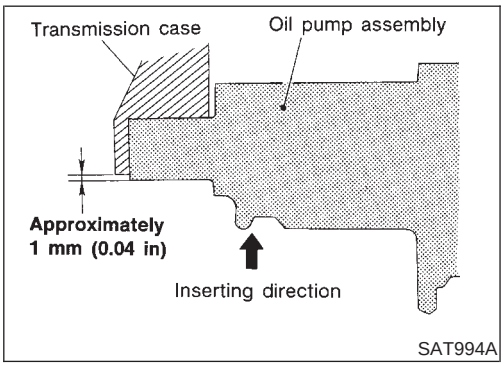

- **Insert oil pump assembly to the specified position in transmission, as shown at left.**

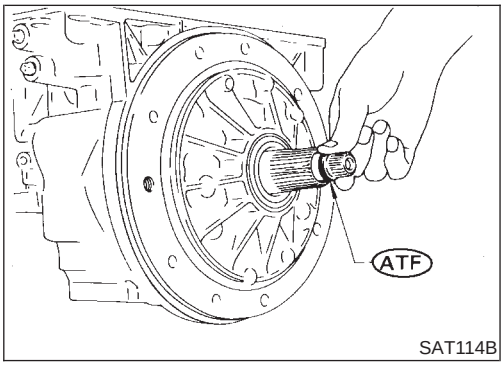

5. Install O-ring on input shaft.

- **Apply ATF to O-rings.**

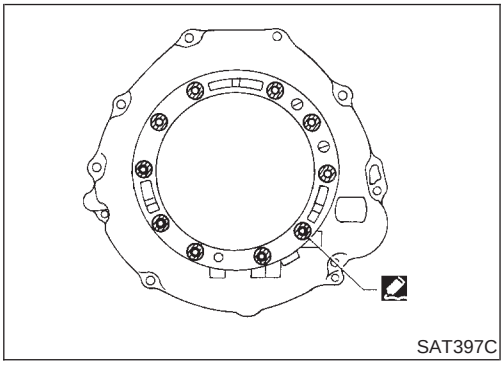

6. Install converter housing.

a. Apply recommended sealant (Genuine anaerobic liquid gasket, Three Bond TB1215, Locktite Part No. 51813 or equivalent) to outer periphery of bolt holes in converter housing.

- **Do not apply too much sealant.**

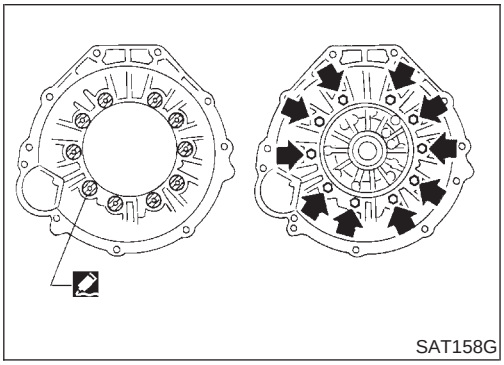

b. Apply recommended sealant (Genuine anaerobic liquid gasket, Three Bond TB1215, Locktite Part No. 51813 or equivalent) to seating surfaces of bolts that secure front of converter housing.

c. Install converter housing on transmission case.

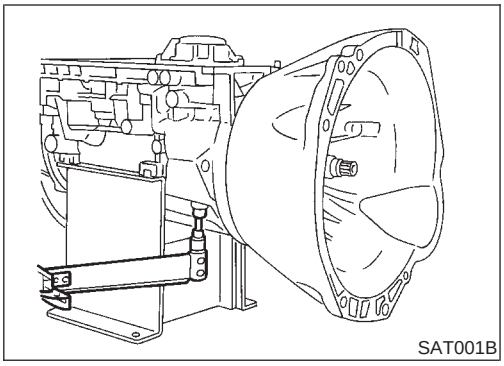
SAT001B

7. Adjust brake band.
a. Tighten anchor end bolt to specified torque.

Anchor end bolt:

: 4 - 6 N·m (0.4 - 0.6 kg-m, 35 - 52 in-lb)

b. Back off anchor end bolt two and a half turns.

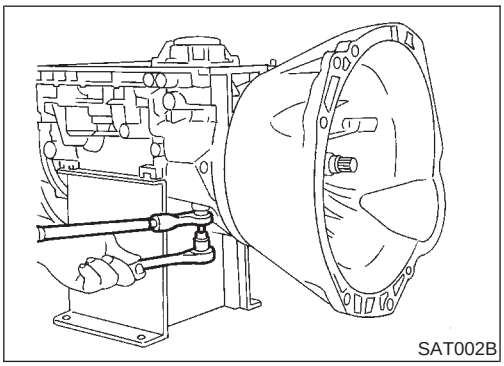
SAT002B

c. While holding anchor end bolt, tighten lock nut.

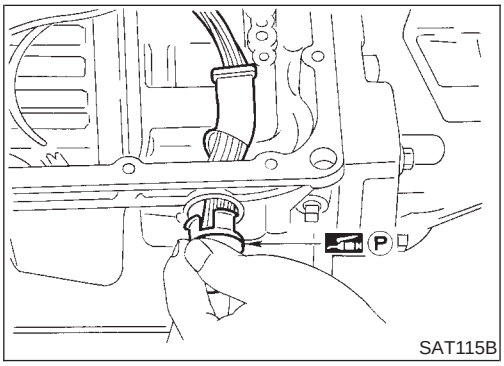

SAT115B

8. Install terminal cord assembly.
a. Install O-ring on terminal cord assembly.
- **Apply petroleum jelly to O-ring.**

b. Compress terminal cord assembly stopper and install terminal cord assembly on transmission case.

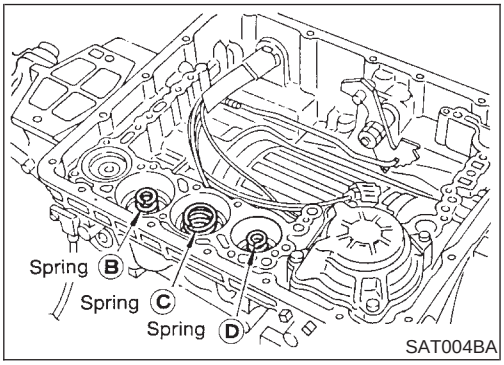

SAT004BA

9. Install control valve assembly.
a. Install accumulator piston return springs B, C and D.

Free length of return springs:

Refer to SDS, AT-340.

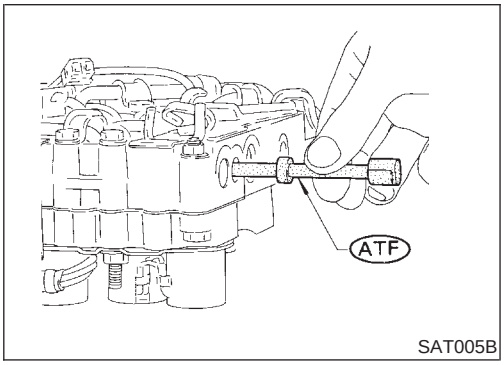

SAT005B

b. Install manual valve on control valve.
- **Apply ATF to manual valve.**

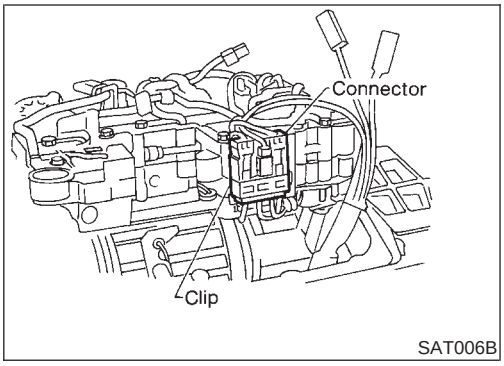

SAT006B

c. Place control valve assembly on transmission case. Connect solenoid connector for upper body.
d. Install connector clip.

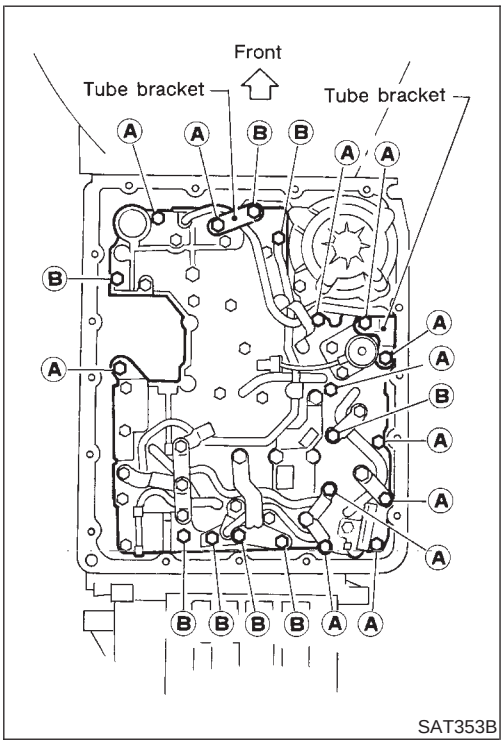

SAT353B

e. Install control valve assembly on transmission case.
f. Install connector tube brackets and tighten bolts A and B.

- **Check that terminal assembly does not catch.**

Bolt symbol	ℓ mm (in) ℓ
A	33 (1.30)
B	45 (1.77)

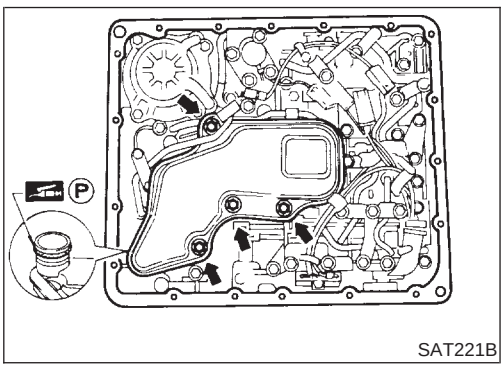

SAT221B

g. Install O-ring on oil strainer.

- **Apply petroleum jelly to O-ring.**

h. Install oil strainer on control valve.

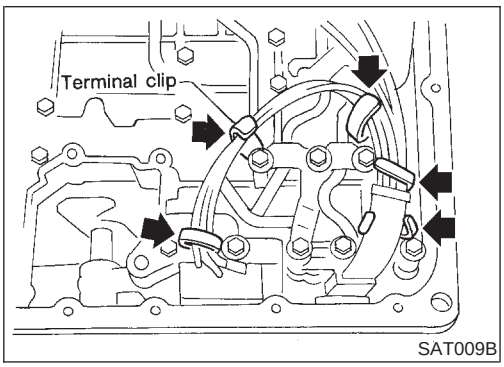

SAT009B

i. Securely fasten terminal harness with clips.

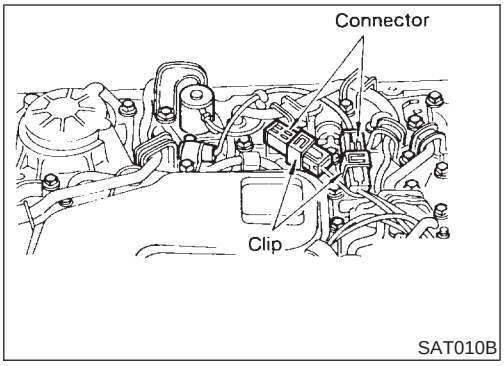

SAT010B

j. Install torque converter clutch solenoid valve and A/T fluid temperature sensor connectors.

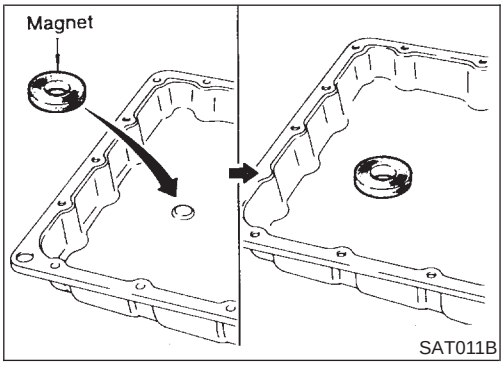

SAT011B

10. Install oil pan.
a. Attach a magnet to oil pan.

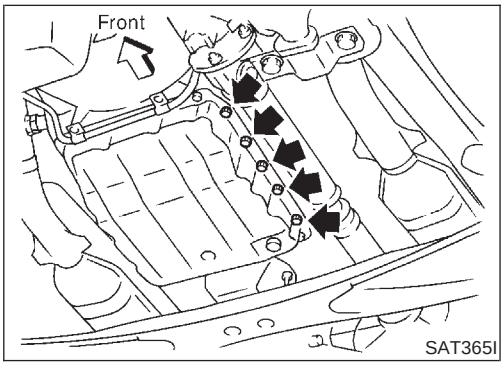

SAT365I

b. Install new oil pan gasket on transmission case.
c. Install oil pan and bracket on transmission case.
- **Always replace oil pan bolts as they are self-sealing bolts.**
- **Before installing bolts, remove traces of sealant and oil from mating surface and thread holes.**
- **Tighten four bolts in a criss-cross pattern to prevent dislocation of gasket.**

d. Tighten drain plug.

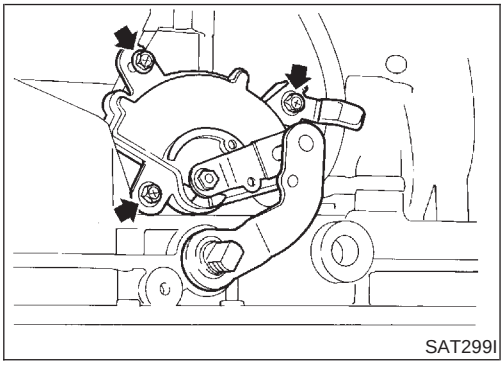
SAT299I

11. Install PNP switch.
a. Check that manual shaft is in "1" position.
b. Temporarily install PNP switch on manual shaft.
c. Move manual shaft to "N".

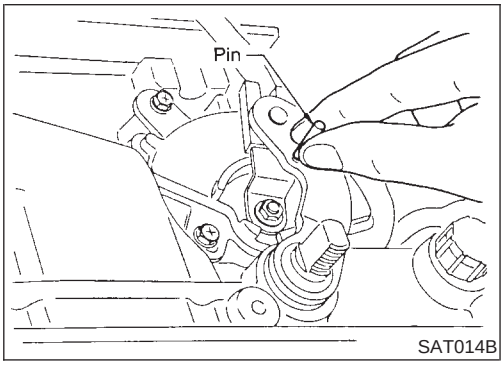

SAT014B

d. Tighten bolts while inserting 4.0 mm (0.157 in) dia. pin vertically into locating holes in PNP switch and manual shaft.

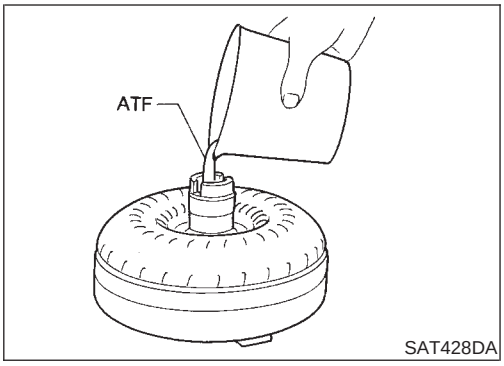

12. Install torque converter.

a. Pour ATF into torque converter.

- **Approximately 2 liters (2-1/8 US qt, 1-3/4 Imp qt) of fluid are required for a new torque converter.**
- **When reusing old torque converter, add the same amount of fluid as was drained.**

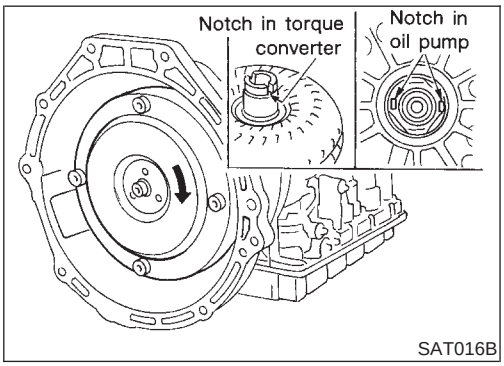

b. Install torque converter while aligning notches and oil pump.

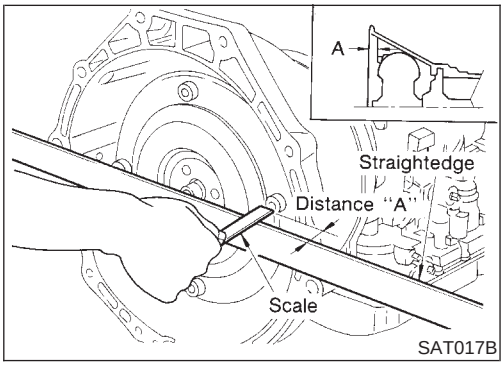

c. Measure distance A to check that torque converter is in proper position.

Distance "A":
26.0 mm (1.024 in) or more

General Specifications

NBAT0160

Applied model		VG33E engine
		4WD
Automatic transmission model		RE4R01A
Transmission model code number		43X78
Stall torque ratio		2.0 : 1
Transmission gear ratio	1st	2.785
	2nd	1.545
	Top	1.000
	OD	0.694
	Reverse	2.272
Recommended fluid		Nissan Matic “D” (Continental U.S. and Alaska) or Genuine Nissan Automatic Transmission Fluid (Canada)*1
Fluid capacity		8.5ℓ (9 US qt, 7-1/2 Imp qt)

*1: Refer to MA-11, “Fluids and Lubricants”.

Shift Schedule

NBAT0178

VEHICLE SPEED WHEN SHIFTING GEARS THROTTLE POSITION

NBAT0178S01

Throttle position	Vehicle speed km/h (MPH)						
	$D_1 \rightarrow D_2$	$D_2 \rightarrow D_3$	$D_3 \rightarrow D_4$	$D_4 \rightarrow D_3$	$D_3 \rightarrow D_2$	$D_2 \rightarrow D_1$	$1_2 \rightarrow 1_1$
Full throttle	48 - 52 (30 - 32)	93 - 101 (58 - 63)	148 - 158 (92 - 98)	143 - 153 (89 - 95)	88 - 96 (55 - 60)	43 - 47 (27 - 29)	44 - 48 (27 - 30)
Half throttle	35 - 39 (22 - 24)	69 - 75 (43 - 47)	134 - 142 (83 - 88)	59 - 67 (37 - 42)	32 - 38 (20 - 24)	10 - 14 (6 - 9)	44 - 48 (27 - 30)

VEHICLE SPEED WHEN PERFORMING AND RELEASING LOCK-UP

NBAT0178S02

4WD (Final gear ratio: 4.363) and 4WD (Final gear ratio: 4.636)

Throttle position	Overdrive control switch [Shift position]	Vehicle speed km/h (MPH)	
		Lock-up “ON”	Lock-up “OFF”
Full throttle	ON [D_4]	149 - 157 (93 - 98)	144 - 152 (89 - 94)
	OFF [D_3]	74 - 82 (46 - 51)	71 - 79 (44 - 49)
Half throttle	ON [D_4]	141 - 149 (88 - 93)	85 - 93 (53 - 58)
	OFF [D_3]	74 - 82 (46 - 51)	71 - 79 (44 - 49)

Stall Revolution

NBAT0163

Stall revolution rpm	2,440 - 2,640

Line Pressure

NBAT0164

Engine speed rpm	Line pressure kPa (kg/cm^2, psi)	
	D, 2 and 1 positions	R position
Idle	422 - 461 (4.3 - 4.7, 61 - 67)	667 - 706 (6.8 - 7.2, 97 - 102)
Stall	1,020 - 1,098 (10.4 - 11.2, 148 - 159)	1,422 - 1,500 (14.5 - 15.3, 206 - 218)

Return Springs

NBAT0165
Unit: mm (in)

Parts			Item		
			Part No.*	Free length	Outer diameter
Control valve	Upper body	Torque converter relief valve spring	31742-41X23	38.0 (1.496)	9.0 (0.354)
		Pressure regulator valve spring	31742-41X24	44.02 (1.7331)	14.0 (0.551)
		Pressure modifier valve spring	31742-41X19	31.95 (1.2579)	6.8 (0.268)
		Accumulator control valve spring	—	—	—
		Shuttle shift valve D spring	31762-41X01	25.0 (0.984)	7.0 (0.276)
		4-2 sequence valve spring	31756-41X00	29.1 (1.146)	6.95 (0.2736)
		Shift valve B spring	31762-41X01	25.0 (0.984)	7.0 (0.276)
		4-2 relay valve spring	31756-41X00	29.1 (1.146)	6.95 (0.2736)
		Shift valve A spring	31762-41X01	25.0 (0.984)	7.0 (0.276)
		Overrun clutch control valve spring	31762-41X03	23.6 (0.929)	7.0 (0.276)
		Overrun clutch reducing valve spring	31742-41X20	32.5 (1.280)	7.0 (0.276)
		Shuttle shift valve S spring	31762-41X04	51.0 (2.008)	5.65 (0.2224)
		Pilot valve spring	31742-41X13	25.7 (1.012)	9.0 (0.354)
		Torque converter clutch control valve spring	31742-41X22	18.5 (0.728)	13.0 (0.512)
	Lower body	Modifier accumulator valve spring	31742-27X70	31.4 (1.236)	9.8 (0.386)
		1st reducing valve spring	31756-41X05	25.4 (1.000)	6.75 (0.2657)
		3-2 timing valve spring	31742-41X06	23.0 (0.906)	6.7 (0.264)
		Servo charger valve spring	31742-41X06	23.0 (0.906)	6.7 (0.264)
Reverse clutch		16 pcs	31521-41X02 (Assembly)	19.7 (0.7756)	11.6 (0.457)
High clutch		10 pcs	31521-41X03 (Assembly)	24.2 (0.9528)	11.6 (0.457)
Forward clutch (Overrun clutch)		20 pcs	31521-41X00 (Assembly)	35.77 (1.4083)	9.7 (0.382)
Low & reverse brake		18 pcs	31655-41X00 (Assembly)	22.3 (0.878)	11.2 (0.441)
Band servo		Spring A	31605-41X05	45.6 (1.795)	34.3 (1.350)
		Spring B	31605-41X00	53.8 (2.118)	40.3 (1.587)
		Spring C	31605-41X01	29.7 (1.169)	27.6 (1.087)
Accumulator		Accumulator A	31605-41X02	43.0 (1.693)	18.0 (0.709)
		Accumulator B	31605-41X10	66.0 (2.598)	20.0 (0.787)
		Accumulator C	31605-41X09	45.0 (1.772)	29.3 (1.154)
		Accumulator D	31605-41X06	58.4 (2.299)	17.3 (0.681)

*: Always check with the Parts Department for the latest parts information.

Accumulator O-ring

NBAT0166

Accumulator	Diameter mm (in)			
	A	B	C	D
Small diameter end	29 (1.14)	32 (1.26)	45 (1.77)	29 (1.14)
Large diameter end	45 (1.77)	50 (1.97)	50 (1.97)	45 (1.77)

Clutches and Brakes

NBAT0167

REVERSE CLUTCH

NBAT0167S01

Code number		43X78	
Number of drive plates		2	
Number of driven plates		2	
Thickness of drive plate mm (in)	Standard	1.90 - 2.05 (0.0748 - 0.0807)	
	Wear limit	1.80 (0.0709)	
Clearance mm (in)	Standard	0.5 - 0.8 (0.020 - 0.031)	
	Allowable limit	1.2 (0.047)	
Thickness of retaining plate		Thickness mm (in)	Part number*
		4.8 (0.189)	31537-42X02
		5.0 (0.197)	31537-42X03
		5.2 (0.205)	31537-42X04
		5.4 (0.213)	31537-42X05
		5.6 (0.220)	31537-42X06

*: Always check with the Parts Department for the latest parts information.

HIGH CLUTCH

NBAT0167S02

Code number		43X78	
Number of drive plates		5	
Number of driven plates		5	
Thickness of drive plate mm (in)	Standard	1.52 - 1.67 (0.0598 - 0.0657)	
	Wear limit	1.40 (0.0551)	
Clearance mm (in)	Standard	1.8 - 2.2 (0.071 - 0.087)	
	Allowable limit	2.8 (0.110)	
Thickness of retaining plate		Thickness mm (in)	Part number*
		3.4 (0.134)	31537-41X71
		3.6 (0.142)	31537-41X61
		3.8 (0.150)	31537-41X62
		4.0 (0.157)	31537-41X63
		4.2 (0.165)	31537-41X64
		4.4 (0.173)	31537-41X65
		4.6 (0.181)	31537-41X66
		4.8 (0.189)	31537-41X67

*: Always check with the Parts Department for the latest parts information.

FORWARD CLUTCH

NBAT0167S03

Code number		43X78	
Number of drive plates		7	
Number of driven plates		7	
Thickness of drive plate mm (in)	Standard	1.52 - 1.67 (0.0598 - 0.0657)	
	Wear limit	1.40 (0.0551)	
Clearance mm (in)	Standard	0.35 - 0.75 (0.0138 - 0.0295)	
	Allowable limit	1.85 (0.0728)	
Thickness of retaining plate		Thickness mm (in)	Part number*
		4.6 (0.181)	31537-42X13
		4.8 (0.189)	31537-42X14
		5.0 (0.197)	31537-42X15
		5.2 (0.205)	31537-4AX00
		5.4 (0.213)	31537-4AX01
		5.6 (0.220)	31537-4AX02

*: Always check with the Parts Department for the latest parts information.

OVERRUN CLUTCH

NBAT0167S04

Code number		43X78	
Number of drive plates		3	
Number of driven plates		5	
Thickness of drive plate mm (in)	Standard	1.90 - 2.05 (0.0748 - 0.0807)	
	Wear limit	1.80 (0.0709)	
Clearance mm (in)	Standard	1.0 - 1.4 (0.039 - 0.055)	
	Allowable limit	2.0 (0.079)	
Thickness of retaining plate		Thickness mm (in)	Part number*
		4.2 (0.165)	31537-41X80
		4.4 (0.173)	31537-41X81
		4.6 (0.181)	31537-41X82
		4.8 (0.189)	31537-41X83
		5.0 (0.197)	31537-41X84

*: Always check with the Parts Department for the latest parts information.

LOW & REVERSE BRAKE

NBAT0167S05

Code number		43X78	
Number of drive plates		7	
Number of driven plates		7	
Thickness of drive plate mm (in)	Standard	1.52 - 1.67 (0.0598 - 0.0657)	
	Wear limit	1.40 (0.0551)	
Clearance mm (in)	Standard	0.8 - 1.1 (0.031 - 0.043)	
	Allowable limit	2.3 (0.091)	
Thickness of retaining plate		Thickness mm (in)	Part number*
		6.6 (0.260)	31667-41X17
		6.8 (0.268)	31667-41X11
		7.0 (0.276)	31667-41X12
		7.2 (0.283)	31667-41X13
		7.4 (0.291)	31667-41X14
		7.6 (0.299)	31667-41X07
		7.8 (0.307)	31667-41X08
		8.0 (0.315)	31667-41X00
		8.2 (0.323)	31667-41X01
		8.4 (0.331)	31667-41X02
		8.6 (0.339)	31667-41X03
		8.8 (0.346)	31667-41X04
		9.0 (0.354)	31667-41X05

*: Always check with the Parts Department for the latest parts information.

BRAKE BAND

NBAT0167S06

Anchor end bolt nut tightening torque	40 - 51 N·m (4.1 - 5.2 kg-m, 30 - 38 ft-lb)
Anchor end bolt tightening torque	4 - 6 N·m (0.4 - 0.6 kg-m, 35 - 52 in-lb)
Number of returning revolution for anchor end bolt	2.5

Oil Pump and Low One-way Clutch

NBAT0168

Unit: mm (in)

Oil pump clearance	Cam ring — oil pump housing	Standard	0.01 - 0.024 (0.0004 - 0.0009)
	Rotor, vanes and control piston — oil pump housing	Standard	0.03 - 0.044 (0.0012 - 0.0017)
Seal ring clearance		Standard	0.10 - 0.25 (0.0039 - 0.0098)
		Allowable limit	0.25 (0.0098)

Total End Play

NBAT0169

Total end play "T_1"	0.25 - 0.55 mm (0.0098 - 0.0217 in)	
Thickness of oil pump cover bearing race	Thickness mm (in)	Part number*
	0.8 (0.031)	31435-41X01
	1.0 (0.039)	31435-41X02
	1.2 (0.047)	31435-41X03
	1.4 (0.055)	31435-41X04
	1.6 (0.063)	31435-41X05
	1.8 (0.071)	31435-41X06
	2.0 (0.079)	31435-41X07

*: Always check with the Parts Department for the latest parts information.

Reverse Clutch Drum End Play

NBAT0170

Reverse clutch drum end play "T_2"	0.55 - 0.90 mm (0.0217 - 0.0354 in)	
Thickness of oil pump thrust washer	Thickness mm (in)	Part number*
	0.9 (0.035)	31528-21X01
	1.1 (0.043)	31528-21X02
	1.3 (0.051)	31528-21X03
	1.5 (0.059)	31528-21X04
	1.7 (0.067)	31528-21X05
	1.9 (0.075)	31528-21X06

*: Always check with the Parts Department for the latest parts information.

Removal and Installation

NBAT0171

Manual control linkage	Number of returning revolutions for lock nut	2
	Lock nut tightening torque	4.4 - 5.9 N·m (0.45 - 0.60 kg-m, 39.1 - 52.1 in-lb)
Distance between end of converter housing and torque converter		26.0 mm (1.024 in) or more

Shift Solenoid Valves

NBAT0212

Gear position	1	2	3	4
Shift solenoid valve A	ON (Closed)	OFF (Open)	OFF (Open)	ON (Closed)
Shift solenoid valve B	ON (Closed)	ON (Closed)	OFF (Open)	OFF (Open)

Solenoid Valves

NBAT0213

Solenoid valves	Resistance (Approx.) Ω	Terminal No.
Shift solenoid valve A	20 - 40	3
Shift solenoid valve B	20 - 40	2
Overrun clutch solenoid valve	20 - 40	4
Line pressure solenoid valve	2.5 - 5	6
Torque converter clutch solenoid valve	10 - 20	7

A/T Fluid Temperature Sensor

NBAT0214

Remarks: Specification data are reference values.

Monitor item	Condition	Specification
A/T fluid temperature sensor	Cold [20°C (68°F)] ↓ Hot [80°C (176°F)]	Approximately 1.5V ↓ Approximately 0.5V

Revolution Sensor

NBAT0215

Terminal No.		Resistance
1	2	500 - 650Ω
2	3	No continuity
1	3	No continuity

Dropping Resistor

NBAT0216

Resistance	11.2 - 12.8Ω