RAM COMMERCIAL

2015

PROMASTER

OWNER'S MANUAL

VEHICLES SOLD IN CANADA

With respect to any Vehicles Sold in Canada, the name FCA US LLC shall be deemed to be deleted and the name FCA Canada Inc. used in substitution therefore.

DRIVING AND ALCOHOL

Drunken driving is one of the most frequent causes of accidents.

Your driving ability can be seriously impaired with blood alcohol levels far below the legal minimum. If you are drinking, don't drive. Ride with a designated non-drinking driver, call a cab, a friend, or use public transportation.

WARNING!
Driving after drinking can lead to an accident. Your perceptions are less sharp, your reflexes are slower, and your judgment is impaired when you have been drinking. Never drink and then drive.

This manual illustrates and describes the operation of features and equipment that are either standard or optional on this vehicle. This manual may also include a description of features and equipment that are no longer available or were not ordered on this vehicle. Please disregard any features and equipment described in this manual that are not on this vehicle.

FCA US LLC reserves the right to make changes in design and specifications, and/or make additions to or improvements to its products without imposing any obligation upon itself to install them on products previously manufactured.

Copyright © 2015 FCA US LLC

TABLE OF CONTENTS

SECTION		PAGE
1	INTRODUCTION	3
2	THINGS TO KNOW BEFORE STARTING YOUR VEHICLE	9
3	UNDERSTANDING THE FEATURES OF YOUR VEHICLE	69
4	UNDERSTANDING YOUR INSTRUMENT PANEL	123
5	STARTING AND OPERATING	197
6	WHAT TO DO IN EMERGENCIES	285
7	MAINTAINING YOUR VEHICLE	327
8	MAINTENANCE SCHEDULES	387
9	IF YOU NEED CONSUMER ASSISTANCE	395
10	INDEX	405

INTRODUCTION

CONTENTS

- INTRODUCTION 4
- HOW TO USE THIS MANUAL 4
- WARNINGS AND CAUTIONS 6
- VAN CONVERSIONS/CAMPERS 6
- VEHICLE IDENTIFICATION NUMBER 6
- VEHICLE MODIFICATIONS/ALTERATIONS 7

INTRODUCTION

Congratulations on selecting your new FCA US LLC vehicle. Be assured that it represents precision workmanship, distinctive styling, and high quality - all essentials that are traditional to our vehicles.

This Owner's Manual has been prepared with the assistance of service and engineering specialists to acquaint you with the operation and maintenance of your vehicle. It is supplemented by Warranty Information, and various customer-oriented documents. Please take the time to read these publications carefully. Following the instructions and recommendations in this manual will help assure safe and enjoyable operation of your vehicle.

NOTE: After reviewing the owner information, it should be stored in the vehicle for convenient referencing and remain with the vehicle when sold.

When it comes to service, remember that your authorized dealer knows your vehicle best, has factory-trained technicians and genuine MOPAR® parts, and cares about your satisfaction.

RAM is a registered trademark of FCA US LLC.

HOW TO USE THIS MANUAL

Consult the Table of Contents to determine which section contains the information you desire.

Since the specification of your vehicle depends on the items of equipment ordered, certain descriptions and illustrations may differ from your vehicle's equipment.

The detailed index at the back of this Owner's Manual contains a complete listing of all subjects.

Consult the following table for a description of the symbols that may be used on your vehicle or throughout this Owner's Manual:

WATER IN FUEL
REAR WINDOW WIPER
WINDSHIELD WIPER INTERMITTENT
EXTERIOR BULB FAILURE
HIGH BEAM
TURN SIGNALS
UPPER AIR OUTLET
HEATED SEAT LOW
DOOR LOCK
ADJUSTABLE PEDALS
ELECTRONIC SPEED CONTROL
ESP BAS
ELECTRONIC STABILITY PROGRAM / BRAKE ASSIST SYSTEM
FUEL
REAR WINDOW INTERMITTENT WIPER
WINDSHIELD WASHER
MASTER LIGHTING SWITCH
LOW BEAM
KEY ACTIVATE (POWER OUTLET)
UPPER AND LOWER AIR OUTLET
HEATED SEAT HIGH
WINDOW LIFT
TIRE PRESSURE MONITOR
HILL DESCENT CONTROL
BRAKE
BRAKE SYSTEM WARNING PARKING BRAKE
FUEL FILL SIDE
REAR WINDOW WASHER
WINDSHIELD WASHER FLUID LEVEL
DOME LIGHT
FRONT FOG LIGHT
HOOD RELEASE
LOWER AIR OUTLET
RECIRCULATION
CONVERTIBLE 4 WINDOW DOWN
ELECTRONIC STABILITY CONTROL
AWD!
ALL WHEEL DRIVE
ABS
FAILURE OF ANTI-LOCK BRAKING SYSTEM
ENGINE OIL
REAR WINDOW DEFROST
WINDSHIELD, ELECTRICALLY HEATED
PARK LIGHTS
REAR FOG LAMP
LIFTGATE RELEASE AND LIFTGATE OPEN
DEFROST AND LOWER AIR OUTLET
VENTILATING FAN
WINDOW LOCK
ELECTRONIC THROTTLE CONTROL
4WD!
FOUR WHEEL DRIVE
BRAKE
BRAKE SYSTEM WARNING PARKING BRAKE
BATTERY CHARGING
HEATED MIRROR
WINDSHIELD DEFROST
INSTRUMENT PANEL ILLUMINATION
SEAT BELT
SLIDING DOOR
TRUNK / DECK RELEASE
AIR CONDITIONING
CHILD SEAT TETHER ANCHOR
VOICE RECOGNITION BUTTON
WARNING
TOW/ HAUL
TOW / HAUL
GLOW PLUG
POWER STEERING FLUID
WINDSHIELD WIPER AND WASHER
SIDE AIRBAG
AIRBAG
SLIDING DOOR
EMERGENCY RELEASE HANDLE
LIGHTER
LOWER ANCHORS AND TETHER FOR CHILDREN (LATCH)
UCONNECT™ BUTTON
HAZARD
4 LOW
FOUR WHEEL DRIVE LOW
MALFUNCTION INDICATOR LIGHT
TRANS OIL TEMP
ENGINE COOLANT TEMPERATURE
SRS AIRBAG
SUPPLEMENTAL RESTRAINT SYSTEM
PASSENGER AIRBAG OFF
DOOR AJAR
CONVERTIBLE TOP DOWN
CONVERTIBLE TOP UP
HORN
SEE OWNER'S MANUAL ISO
A/C PUSH
AIR CONDITIONER
OFF
ELECTRONIC STABILITY CONTROL OFF

010533317

WARNINGS AND CAUTIONS

This Owner's Manual contains **WARNINGS** against operating procedures that could result in a collision or bodily injury. It also contains **CAUTIONS** against procedures that could result in damage to your vehicle. If you do not read this entire Owner's Manual, you may miss important information. Observe all Warnings and Cautions.

VAN CONVERSIONS/CAMPERS

The New Vehicle Limited Warranty does not apply to body modifications or special equipment installed by van conversion/camper manufacturers/body builders. Refer to the Warranty Information book, Section 2.1.C. Such equipment includes video monitors, VCRs, heaters, stoves, refrigerators, etc. For warranty coverage and service on these items, contact the applicable manufacturer.

Operating instructions for the special equipment installed by the conversion/camper manufacturer should also be supplied with your vehicle. If these instructions are missing, please contact your authorized dealer for assistance in obtaining replacement documents from the applicable manufacturer.

For information on the Body Builders Guide refer to: www.rambodybuilder.com. This website contains dimensional and technical specifications for your vehicle. It is intended for Second Stage Manufacturer's technical support. For service issues, contact your authorized dealer.

VEHICLE IDENTIFICATION NUMBER

The Vehicle Identification Number (VIN) is found on the left front corner of the instrument panel, visible through the windshield. This number also appears on the vehicle

frame and underbody as well as the Automobile Information Disclosure Label affixed to a window on your vehicle, the vehicle registration and title.

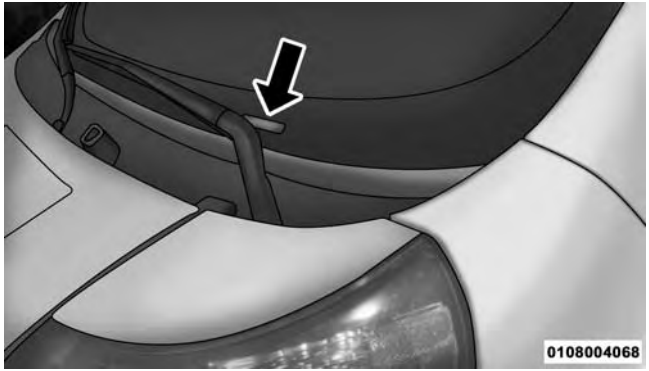

Vehicle Identification Number

NOTE: It is illegal to remove or alter the VIN.

VEHICLE MODIFICATIONS/ALTERATIONS

WARNING!

Any modifications or alterations to this vehicle could seriously affect its roadworthiness and safety and may lead to a collision resulting in serious injury or death.

THINGS TO KNOW BEFORE STARTING YOUR VEHICLE

CONTENTS

■ A WORD ABOUT YOUR KEYS 11
- □ Ignition Key Removal 11
- □ Locking Doors With A Key 13
- □ Key-In-Ignition Reminder 13

■ SENTRY KEY® 13
- □ Replacement Keys 14
- □ General Information 14

■ VEHICLE SECURITY ALARM — IF EQUIPPED 15
- □ Rearming Of The System 15
- □ To Arm The System. 15
- □ To Disarm The System. 15
- □ Security System Manual Override. 16

■ ILLUMINATED ENTRY 16

■ REMOTE KEYLESS ENTRY (RKE). 17
- □ To Unlock The Doors. 18
- □ To Lock The Doors 18
- □ Programming Additional Transmitters. 18
- □ Transmitter Battery Replacement 18
- □ General Information 19

■ POWER DOOR LOCKS 20
□ Automatic Door Locks 22
□ Auto Unlock Doors 22
■ WINDOWS 22
□ Power Windows 22
□ Wind Buffeting 23
■ OCCUPANT RESTRAINTS SYSTEMS 24
□ Important Safety Precautions 24
□ Seat Belt Systems 25
□ Supplemental Restraint System (SRS) 37
□ Child Restraints 52
□ Transporting Pets 61
■ FUEL CUT OFF SWITCH 61
■ ENGINE BREAK-IN RECOMMENDATIONS 63
■ SAFETY TIPS 63
□ Transporting Passengers. 63
□ Exhaust Gas 64
□ Safety Checks You Should Make Inside The Vehicle 65
□ Periodic Safety Checks You Should Make Outside The Vehicle 67

A WORD ABOUT YOUR KEYS

The Key Fob contains the Remote Keyless Entry (RKE) transmitter with an integrated key. To use the mechanical key, simply push the mechanical key release button.

The vehicle is supplied with a code card containing key code numbers to order duplicate keys, and the authorized studio that sold you your new vehicle has the key code numbers for your vehicle locks. These numbers can be used to order duplicate keys.

0213008267

Remote Keyless Entry (RKE) Transmitter

Ignition Key Removal

1. Place the shift lever in PARK (if equipped with an automatic transmission).
2. Rotate the key to the OFF/LOCK position.

3. Remove the key from the ignition switch lock cylinder.

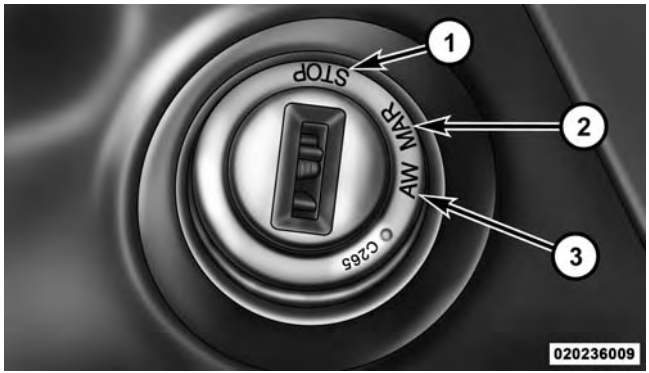

Ignition Switch Positions

1 — STOP (OFF/LOCK)
2 — MAR (ACC/ON/RUN)
3 — AVV (START)

WARNING!

- **Before exiting a vehicle, always apply the parking brake, shift the transmission into PARK and remove the Key Fob from the vehicle. When leaving the vehicle, always lock your vehicle.**
- **Never leave children alone in a vehicle, or with access to an unlocked vehicle.**
- **Allowing children to be in a vehicle unattended is dangerous for a number of reasons. A child or others could be seriously or fatally injured. Children should be warned not to touch the parking brake, brake pedal or the gear selector.**
- **Do not leave the Key Fob in or near the vehicle, or in a location accessible to children. A child could operate power windows, other controls, or move the vehicle.**

(Continued)

WARNING! *(Continued)*

- **Do not leave children or animals inside parked vehicles in hot weather. Interior heat build-up may cause serious injury or death.**

CAUTION!

An unlocked car is an invitation to thieves. Always remove the key from the ignition and lock all the doors when leaving the vehicle unattended.

Locking Doors With A Key

You can insert the key with either side up. To lock the door, turn the key to the right. To unlock the door, turn the key to the left. Refer to "Body Lubrication" in "Maintaining Your Vehicle" for maintenance procedures.

Key-In-Ignition Reminder

Opening the driver's door when the key is in the ignition and the ignition switch position is OFF/LOCK sounds a signal to remove the key.

SENTRY KEY®

The Sentry Key® Immobilizer System prevents unauthorized vehicle operation by disabling the engine. The system does not need to be armed or activated. Operation is automatic, regardless of whether the vehicle is locked or unlocked.

The system uses ignition keys which have an embedded electronic chip (transponder) to prevent unauthorized vehicle operation. Therefore, only keys that are programmed to the vehicle can be used to start and operate the vehicle.

NOTE: A key which has not been programmed is also considered an invalid key, even if it is cut to fit the ignition switch lock cylinder for that vehicle.

If the Vehicle Security Light is on after the key is turned to the ON/RUN position, it indicates that there is a problem with the electronics.

CAUTION!

- **Always remove the Sentry Key® from the vehicle and lock all doors when leaving the vehicle unattended.**
- **The Sentry Key® Immobilizer system is not compatible with some aftermarket remote starting systems. Use of these systems may result in vehicle starting problems and loss of security protection.**

All of the keys provided with your new vehicle have been programmed to the vehicle electronics.

Replacement Keys

NOTE: Only keys that have been programmed to the vehicle electronics can be used to start the vehicle. Once a Sentry Key® has been programmed to a vehicle, it cannot be programmed to any other vehicle. When having the Sentry Key® Immobilizer System serviced, bring all vehicle keys with you to an authorized dealer.

The VIN is required for authorized dealer replacement of keys. Duplication of keys may be performed at an authorized dealer.

General Information

The Sentry Key® system complies with FCC rules part 15 and with RSS-210 of Industry Canada. Operation is subject to the following conditions:

- This device may not cause harmful interference.

- This device must accept any interference that may be received, including interference that may cause undesired operation.

NOTE: Changes or modifications not expressly approved by the party responsible for compliance could void the user's authority to operate the equipment.

VEHICLE SECURITY ALARM — IF EQUIPPED

The Vehicle Security Alarm monitors the vehicle doors and ignition for unauthorized operation. When the Vehicle Security Alarm is activated, interior switches for door locks are disabled. The system provides both audible and visible signals. For the first three minutes, the horn will sound, and the turn signal lights will flash. For an additional 15 minutes, only the turn signal lights will flash.

Rearming Of The System

If the system has not been disabled, the Vehicle Security Alarm will rearm itself after the 15 additional minutes of turn lamps flashing. If the condition which initiated the alarm is still present, the system will ignore that condition and monitor the remaining doors and ignition.

To Arm The System

To arm the system, The Vehicle Security Alarm will set when you use the Remote Keyless Entry (RKE) transmitter to lock the doors. If a door or the hood is not properly shut, the alarm system will not be armed.

To Disarm The System

Use the RKE transmitter to unlock the door and disarm the system.

The Vehicle Security Alarm will also disarm if a programmed Sentry Key® is inserted into the ignition switch. To exit the alarming mode, push the RKE transmitter UNLOCK button, or insert a programmed Sentry Key® into the ignition switch.

The Vehicle Security Alarm is designed to protect your vehicle. However, you can create conditions where the system will give you a false alarm. If one of the previously described arming sequences has occurred, the Vehicle Security Alarm will arm regardless of whether you are in the vehicle or not. If you remain in the vehicle and open a door, the alarm will sound. If this occurs, disarm the Vehicle Security Alarm.

Security System Manual Override

The Vehicle Security Alarm will not arm if you lock the doors using the manual door lock plunger.

ILLUMINATED ENTRY

The courtesy lights will turn on when you use the Remote Keyless Entry (RKE) transmitter or manually from the driver door cylinder to unlock the doors or open any door.

The lights will fade to off after approximately 30 seconds, or they will immediately fade to off once the ignition switch is turned to ON/RUN from the OFF position.

NOTE:

- The front courtesy overhead console and door courtesy lights will not turn off if the dimmer control is in the “Dome ON” position.
- The illuminated entry system will not operate if the dimmer control is in the “Dome OFF” position.

REMOTE KEYLESS ENTRY (RKE)

This system allows you to lock or unlock the doors from distances up to approximately 66 ft (20 m) using a hand-held Remote Keyless Entry (RKE) transmitter. The RKE transmitter does not need to be pointed at the vehicle to activate the system.

NOTE: The line of transmission must not be blocked with metal objects.

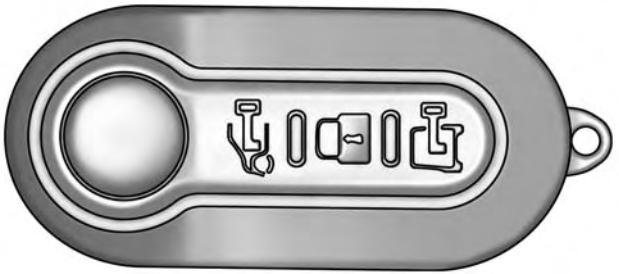

0213008266

Remote Keyless Entry Transmitter

To Unlock The Doors

Push and release the UNLOCK button on RKE transmitter once to unlock only the front doors. Push and release the CARGO UNLOCK button on RKE transmitter once to unlock the cargo area (rear lateral sliding doors and rear door). The turn signal lights will flash to acknowledge the unlock signal.

To Lock The Doors

Push and release the LOCK button on the RKE transmitter to lock all doors. The turn signal lights will flash to acknowledge the signal; the horn will chirp too during turn signal lights flashing.

If a door is ajar, the turn signal lights will flash at an increased rate, and there will be no horn chirp. This is to indicate that a door is still ajar.

Programming Additional Transmitters

Refer to "Sentry Key®" in "Things To Know Before Starting" for further information.

If you do not have a programmed RKE transmitter, contact your authorized dealer for details.

Transmitter Battery Replacement

NOTE: Perchlorate Material – special handling may apply. See www.dtsc.ca.gov/hazardouswaste/perchlorate

The recommended replacement battery is CR2032.

1. Push the mechanical key release button and release the mechanical key to access the battery case screw located on the side of the Key Fob.
2. Rotate the screw located on the side of the Key Fob using a small screwdriver.

Key Fob Screw Location

3. Take out the battery case. Remove and replace the battery observing its polarity.
4. Refit the battery case inside the Key Fob and turn the screw to lock it into place.

General Information

This device complies with Part 15 of the FCC rules and RSS-210 of Industry Canada. Operation is subject to the following conditions:

- This device may not cause harmful interference.
- This device must accept any interference received, including interference that may cause undesired operation.

NOTE: Changes or modifications not expressly approved by the party responsible for compliance could void the user's authority to operate the equipment.

If your RKE transmitter fails to operate from a normal distance, check for these two conditions:

1. A weak battery in the transmitter. The expected life of the battery is a minimum of three years with normal usage.

2. Closeness to a radio transmitter such as a radio station tower, airport transmitter, and some mobile or CB radios.

POWER DOOR LOCKS

The central LOCK/UNLOCK button has an LED that indicates whether the doors are locked or unlocked.

- **LED ON:** Doors locked. Push central LOCK/UNLOCK button once again to centrally unlock all doors. The LED will switch off.
- **LED OFF:** Doors unlocked. Push the central LOCK/UNLOCK button again to centrally lock all doors. The doors will be locked only if all the doors are properly closed.

Once the doors have been locked with the RKE transmitter, it will no longer be possible to unlock them by pushing central LOCK/UNLOCK button.

To unlock the front doors, pull the inside door handle to the detent.

The load compartment power door lock switch is located on the driver door trim panel. Use this switch to lock or unlock the load compartment doors.

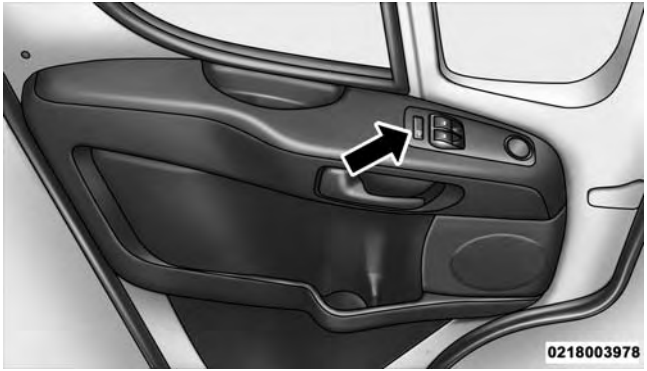

Load Compartment Power Door Lock Switch

WARNING!

- **Do not leave children or animals inside parked vehicles in hot weather. Interior heat build-up may cause serious injury or death.**
- **For personal security and safety in the event of a collision, lock the vehicle doors as you drive as well as when you park and leave the vehicle.**
- **Before exiting a vehicle, always apply the parking brake, shift the transmission into PARK, and remove the Key Fob from the vehicle. When leaving the vehicle, always lock your vehicle.**

(Continued)

WARNING! ***(Continued)***

- **Never leave children alone in a vehicle, or with access to an unlocked vehicle. Allowing children to be in a vehicle unattended is dangerous for a number of reasons. A child or others could be seriously or fatally injured. Children should be warned not to touch the parking brake, brake pedal or the gear selector.**
- **Do not leave the Key Fob in or near the vehicle, or in a location accessible to children. A child could operate power windows, other controls, or move the vehicle.**

CAUTION!

An unlocked vehicle is an invitation to thieves. Always remove the key from the ignition and lock all of the doors when leaving the vehicle unattended.

Automatic Door Locks

The auto door lock feature default condition is enabled. When enabled, the door locks will lock automatically when the vehicle's speed exceeds 12 mph (20 km/h). The auto door lock feature can be enabled or disabled through the EVIC or the Uconnect® system.

Auto Unlock Doors

This feature unlocks all doors when the driver door is open.

WINDOWS

Power Windows

The control on the left front door panel has UP-DOWN switches that give you fingertip control of all power windows. There is a single opening and closing switch on the front passenger door for passenger window control.

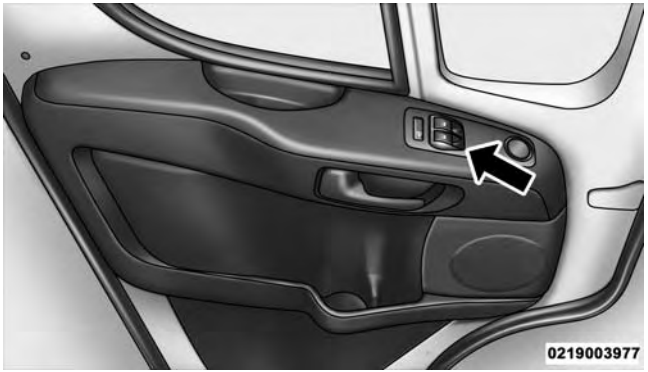

Power Window Switches

NOTE: The Key Off Power Delay feature will allow the power windows to operate for up to three minutes after the ignition is turned OFF. This feature is cancelled when either front door is opened.

WARNING!

- **Never leave children alone in a vehicle, or with access to an unlocked vehicle. Allowing children to be in a vehicle unattended is dangerous for a number of reasons. A child or others could be seriously or fatally injured. Children should be warned not to touch the parking brake, brake pedal or the gear selector.**
- **Do not leave the Key Fob in or near the vehicle or in a location accessible to children. A child could operate power windows, other controls, or move the vehicle.**

Auto-Down Feature

The front window switches are equipped with an Auto-Down feature. Push the window switch for a short period of time, release, and the window will go down automatically.

To open the window part way, push the window switch and release it when you want the window to stop.

NOTE: The power window switches remain active for up to three minutes (depending on the accessory delay setting) after the ignition switch has been turned OFF. Opening a vehicle front door will cancel this feature.

Wind Buffeting

Wind buffeting can be described as the perception of pressure on the ears or a helicopter-type sound in the ears. Your vehicle may exhibit wind buffeting with the windows down in certain open or partially open positions. This is a normal occurrence and can be minimized. If the buffeting occurs open the front windows together to minimize the buffeting.

OCCUPANT RESTRAINTS SYSTEMS

Some of the most important safety features in your vehicle are the restraint systems:

- Seat Belt Systems
- Supplemental Restraints System (SRS) Air Bags
- Child Restraints

Important Safety Precautions

Please pay close attention to the information in this section. It tells you how to use your restraint system properly, to keep you and your passengers as safe as possible.

Here are some simple steps you can take to minimize the risk of harm from a deploying air bag:

1. Children 12 years old and under should always ride buckled up in a vehicle with a rear seat.
2. If a child from 2 to 12 years old (not in a rear-facing child restraint) must ride in the front passenger seat, move the seat as far back as possible and use the proper child restraint. (Refer to “Child Restraints”)
3. Children that are not big enough to wear the vehicle seat belt properly (Refer to ″Child Restraints″) should be secured in a vehicle with a rear seat in child restraints or belt-positioning booster seats. Older children who do not use child restraints or belt-positioning booster seats should ride properly buckled up in a vehicle with a rear seat.
4. Never allow children to slide the shoulder belt behind them or under their arm.
5. You should read the instructions provided with your child restraint to make sure that you are using it properly.

6. All occupants should always wear their lap and shoulder belts properly.
7. The driver and front passenger seats should be moved back as far as practical to allow the Advanced Front Air Bags room to inflate.
8. Do not lean against the door or window. If your vehicle has side air bags, and deployment occurs, the side air bags will inflate forcefully into the space between occupants and the door and occupants could be injured.
9. If the air bag system in this vehicle needs to be modified to accommodate a disabled person, contact the Customer Center. Phone numbers are provided under "If You Need Assistance."

WARNING!

- **Never place a rear-facing child restraint in front of an air bag. A deploying passenger Advanced Front Air Bag can cause death or serious injury to a child 12 years or younger, including a child in a rear-facing child restraint.**
- **Only use a rear-facing child restraint in a vehicle with a rear seat.**

Seat Belt Systems

Buckle up even though you are an excellent driver, even on short trips. Someone on the road may be a poor driver and could cause a collision that includes you. This can happen far away from home or on your own street.

Research has shown that seat belts save lives, and they can reduce the seriousness of injuries in a collision. Some of the worst injuries happen when people are thrown from the vehicle. Seat belts reduce the possibility of ejection and the risk of injury caused by striking the inside of the vehicle. Everyone in a motor vehicle should be belted at all times.

Enhanced Seat Belt Use Reminder System (BeltAlert)

BeltAlert is a feature intended to remind the driver and outboard front passenger (if equipped with outboard front passenger BeltAlert) to buckle their seat belts. The feature is active whenever the ignition switch is in the START or ON/RUN position. If the driver or outboard front seat passenger is unbelted, the Seat Belt Reminder Light will turn on and remain on until both outboard front seat belts are buckled.

The BeltAlert warning sequence begins after the vehicle speed is over 5 mph (8 km/h) by blinking the Seat Belt Reminder Light and sounding an intermittent chime. Once the sequence starts, it will continue for the entire duration or until the respective seat belts are buckled. After the sequence completes, the Seat Belt Reminder Light remains illuminated until the respective seat belts are buckled. The driver should instruct all other occupants to buckle their seat belts. If an outboard front seat belt is unbuckled while traveling at speeds greater than 5 mph (8 km/h), BeltAlert will provide both audio and visual notification.

The outboard front passenger seat BeltAlert is not active when the outboard front passenger seat is unoccupied. BeltAlert may be triggered when an animal or heavy object is on the outboard front passenger seat or when the seat is folded flat (if equipped). It is recommended that

pets be restrained in the rear seat (if equipped) in pet harnesses or pet carriers that are secured by seat belts, and cargo is properly stowed.

BeltAlert can be activated or deactivated by your authorized dealer. FCA US LLC does not recommend deactivating BeltAlert.

NOTE: If BeltAlert has been deactivated, the Seat Belt Reminder Light will continue to illuminate while the driver's or outboard front passenger's (if equipped with BeltAlert) seat belt remains unbuckled.

Lap/Shoulder Belts

All seating positions in your vehicle are equipped with lap/shoulder belts.

The seat belt webbing retractor will lock only during very sudden stops or collisions. This feature allows the shoulder part of the seat belt to move freely with you under normal conditions. However, in a collision the seat belt will lock and reduce your risk of striking the inside of the vehicle or being thrown out of the vehicle.

WARNING!

- **Relying on the air bags alone could lead to more severe injuries in a collision. The air bags work with your seat belt to restrain you properly. In some collisions, the air bags won't deploy at all. Always wear your seat belt even though you have air bags.**
- **In a collision, you and your passengers can suffer much greater injuries if you are not properly buckled up. You can strike the interior of your vehicle or other passengers, or you can be thrown out of the vehicle. Always be sure you and others in your vehicle are buckled up properly.**

(Continued)

WARNING! *(Continued)*

- **It is dangerous to ride in a cargo area, inside or outside of a vehicle. In a collision, people riding in these areas are more likely to be seriously injured or killed.**
- **Do not allow people to ride in any area of your vehicle that is not equipped with seats and seat belts.**
- **Be sure everyone in your vehicle is in a seat and using a seat belt properly.**
- **Wearing your seat belt incorrectly could make your injuries in a collision much worse. You might suffer internal injuries, or you could even slide out of the seat belt. Follow these instructions to wear your seat belt safely and to keep your passengers safe, too.**

(Continued)

WARNING! *(Continued)*

- **Two people should never be belted into a single seat belt. People belted together can crash into one another in a collision, hurting one another badly. Never use a lap/shoulder belt or a lap belt for more than one person, no matter what their size.**
- **A lap belt worn too high can increase the risk of injury in a collision. The seat belt forces won't be at the strong hip and pelvic bones, but across your abdomen. Always wear the lap part of your seat belt as low as possible and keep it snug.**
- **A twisted seat belt may not protect you properly. In a collision, it could even cut into you. Be sure the seat belt is flat against your body, without twists. If you can't straighten a seat belt in your vehicle, take it to your authorized dealer immediately and have it fixed.**

(Continued)

WARNING! ***(Continued)***

- **A seat belt that is buckled into the wrong buckle will not protect you properly. The lap portion could ride too high on your body, possibly causing internal injuries. Always buckle your seat belt into the buckle nearest you.**
- **A seat belt that is too loose will not protect you properly. In a sudden stop, you could move too far forward, increasing the possibility of injury. Wear your seat belt snugly.**
- **A seat belt that is worn under your arm is dangerous. Your body could strike the inside surfaces of the vehicle in a collision, increasing head and neck injury. A seat belt worn under the arm can cause internal injuries. Ribs aren't as strong as shoulder bones. Wear the seat belt over your shoulder so that your strongest bones will take the force in a collision.**

(Continued)

WARNING! ***(Continued)***

- **A shoulder belt placed behind you will not protect you from injury during a collision. You are more likely to hit your head in a collision if you do not wear your shoulder belt. The lap and shoulder belt are meant to be used together.**
- **A frayed or torn seat belt could rip apart in a collision and leave you with no protection. Inspect the seat belt system periodically, checking for cuts, frays, or loose parts. Damaged parts must be replaced immediately. Do not disassemble or modify the seat belt system. Seat belt assemblies must be replaced after a collision.**

Lap/Shoulder Belt Operating Instructions

1. Enter the vehicle and close the door. Sit back and adjust the seat.

2. The seat belt latch plate is above the back of the front seat, and next to your arm in the rear seat (for vehicles equipped with a rear seat). Grasp the latch plate and pull out the seat belt. Slide the latch plate up the webbing as far as necessary to allow the seat belt to go around your lap.

Pulling Out The Latch Plate

3. When the seat belt is long enough to fit, insert the latch plate into the buckle until you hear a "click."

Inserting Latch Plate Into Buckle

4. Position the lap belt so that it is snug and lies low across your hips, below your abdomen. To remove slack in the lap belt portion, pull up on the shoulder belt. To loosen the lap belt if it is too tight, tilt the latch plate and pull on the lap belt. A snug seat belt reduces the risk of sliding under the seat belt in a collision.

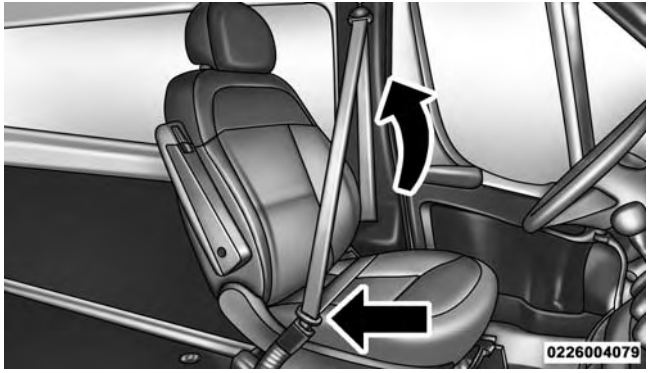

Positioning The Lap Belt

5. Position the shoulder belt across the shoulder and chest with minimal, if any slack so that it is comfortable and not resting on your neck. The retractor will withdraw any slack in the shoulder belt.

6. To release the seat belt, push the red button on the buckle. The seat belt will automatically retract to its stowed position. If necessary, slide the latch plate down the webbing to allow the seat belt to retract fully.

Lap/Shoulder Belt Untwisting Procedure

Use the following procedure to untwist a twisted lap/shoulder belt.

1. Position the latch plate as close as possible to the anchor point.

2. At about 6 to 12 inches (15 to 30 cm) above the latch plate, grasp and twist the seat belt webbing 180 degrees to create a fold that begins immediately above the latch plate.
3. Slide the latch plate upward over the folded webbing. The folded webbing must enter the slot at the top of the latch plate.
4. Continue to slide the latch plate up until it clears the folded webbing and the seat belt is no longer twisted.

Adjustable Upper Shoulder Belt Anchorage

In the driver and front passenger seats, the top of the shoulder belt can be adjusted upward or downward to position the seat belt away from your neck. Push or squeeze the anchorage button to release the anchorage, and move it up or down to the position that serves you best.

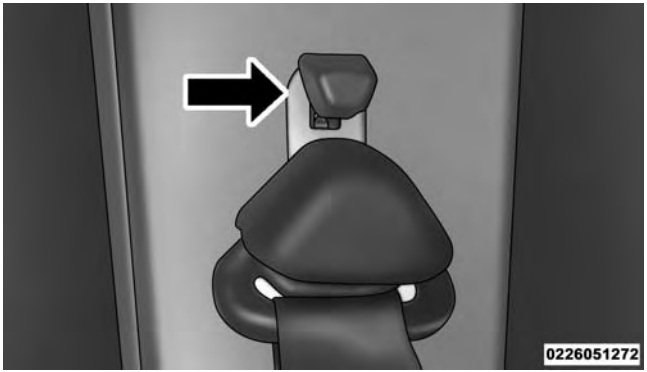

Adjustable Anchorage

As a guide, if you are shorter than average, you will prefer the shoulder belt anchorage in a lower position, and if you are taller than average, you will prefer the shoulder belt anchorage in a higher position. After you release the anchorage button, try to move it up or down to make sure that it is locked in position.

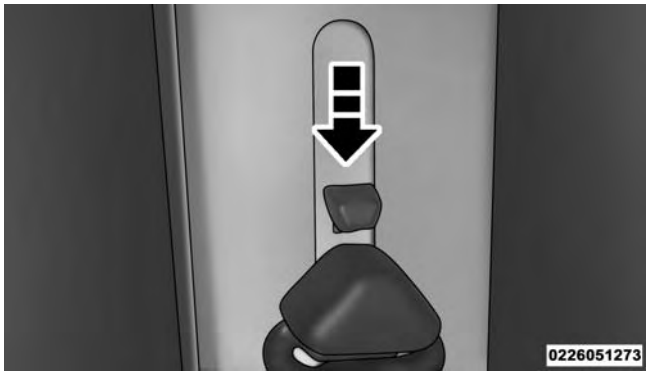

Adjustable Anchorage

NOTE: The adjustable upper shoulder belt anchorage is equipped with an Easy Up feature. This feature allows the shoulder belt anchorage to be adjusted in the upward position without pushing or squeezing the release button. To verify the shoulder belt anchorage is latched, pull downward on the shoulder belt anchorage until it is locked into position.

Seat Belts And Pregnant Women

We recommend that pregnant women use the seat belts throughout their pregnancy. Keeping the mother safe is the best way to keep the baby safe.

Pregnant women should wear the lap part of the seat belt across the thighs and as snug across the hips as possible. Keep the seat belt low so that it does not come across the abdomen. That way the strong bones of the hips will take the force if there is a collision.

Seat Belt Pretensioner

The front seat belt system is equipped with pretensioning devices that are designed to remove slack from the seat belt in the event of a collision. These devices may improve the performance of the seat belt by removing slack from the seat belt early in a collision. Pretensioners work for all size occupants, including those in child restraints.

NOTE: These devices are not a substitute for proper seat belt placement by the occupant. The seat belt still must be worn snugly and positioned properly.

The pretensioners are triggered by the Occupant Restraint Controller (ORC). Like the air bags, the pretensioners are single use items. A deployed pretensioner or a deployed air bag must be replaced immediately.

Energy Management Feature

This vehicle has a seat belt system with an Energy Management feature in the front seating positions that may help further reduce the risk of injury in the event of a collision. This seat belt system has a retractor assembly that is designed to release webbing in a controlled manner.

Automatic Locking Retractor (ALR)

The seat belt in the passenger seating position is equipped with a Switchable Automatic Locking Retractor (ALR) which is used to secure a child restraint system. For additional information, refer to “Installing Child Restraints Using The Vehicle Seat Belt” under the “Child Restraints” section of this manual. The table below defines the type of feature for each seating position.

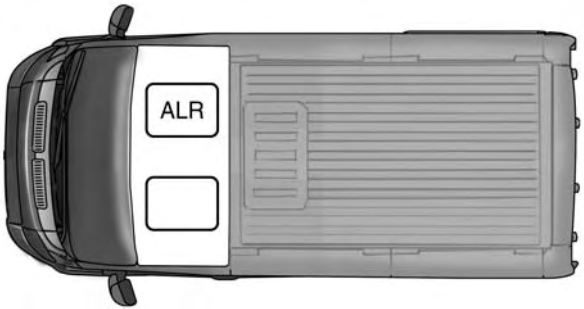

0226007621

Front Bucket Seat Automatic Locking Retractor (ALR) Location

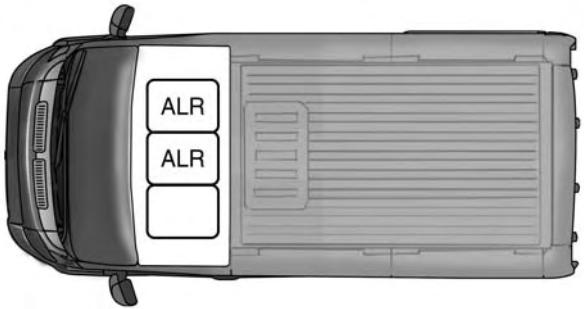

0226007622

Front Bench Seat Automatic Locking Retractor (ALR) Locations

- ALR = Switchable Automatic Locking Retractor

If the passenger seating position is equipped with an ALR and is being used for normal usage, only pull the seat belt webbing out far enough to comfortably wrap around the occupant's mid-section so as to not activate the ALR. If the ALR is activated, you will hear a clicking sound as the seat belt retracts. Allow the webbing to retract completely in this case and then carefully pull out only the amount of webbing necessary to comfortably wrap around the occupant's mid-section. Slide the latch plate into the buckle until you hear a "click."

In Automatic Locking Mode, the shoulder belt is automatically pre-locked. The seat belt will still retract to remove any slack in the shoulder belt. Use the Automatic Locking Mode anytime a child restraint is installed in a seating position that has a seat belt with this feature. Children 12 years old and under should always be properly restrained in a vehicle with a rear seat.

WARNING!

- **Never place a rear-facing child restraint in front of an air bag. A deploying Passenger Advanced Front Air Bag can cause death or serious injury to a child 12 years or younger, including a child in a rear-facing child restraint.**
- **Only use a rear-facing child restraint in a vehicle with a rear seat.**

How To Engage The Automatic Locking Mode

1. Buckle the combination lap and shoulder belt.
2. Grasp the shoulder portion and pull downward until the entire seat belt is extracted.
3. Allow the seat belt to retract. As the seat belt retracts, you will hear a clicking sound. This indicates the seat belt is now in the Automatic Locking Mode.

How To Disengage The Automatic Locking Mode

Unbuckle the combination lap/shoulder belt and allow it to retract completely to disengage the Automatic Locking Mode and activate the vehicle sensitive (emergency) locking mode.

WARNING!

- **The seat belt assembly must be replaced if the switchable Automatic Locking Retractor (ALR) feature or any other seat belt function is not working properly when checked according to the procedures in the Service Manual.**
- **Failure to replace the seat belt assembly could increase the risk of injury in collisions.**
- **Do not use the Automatic Locking Mode to restrain occupants who are wearing the seat belt or children who are using booster seats. The locked mode is**

(Continued)

WARNING! ***(Continued)***

only used to install rear-facing or forward-facing child restraints that have a harness for restraining the child.

Supplemental Restraint System (SRS)

Air Bag System Components

Your vehicle may be equipped with the following air bag system components:

- Occupant Restraint Controller (ORC)
- Air Bag Warning Light
- Steering Wheel and Column
- Instrument Panel
- Knee Impact Bolsters
- Advanced Front Air Bags

- Supplemental Side Air Bags
- Front and Side Impact Sensors
- Seat Belt Pretenioners
- Seat Belt Buckle Switch
- Seat Track Position Sensors

Advanced Front Air Bags

This vehicle has Advanced Front Air Bags for both the driver and front passenger as a supplement to the seat belt restraint systems. The driver's Advanced Front Air Bag is mounted in the center of the steering wheel. The passenger's Advanced Front Air Bag is mounted in the instrument panel, above the glove compartment. The words "SRS AIRBAG" or "AIRBAG" are embossed on the air bag covers.

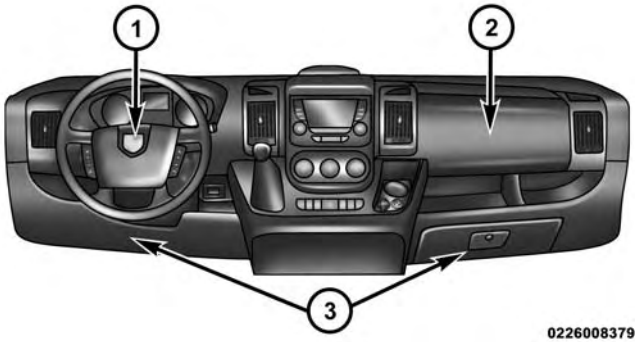

Advanced Front Air Bag And Knee Impact Bolster Locations

1 — Driver Advanced Front Air Bag
2 — Passenger Advanced Front Air Bag
3 — Driver/Passenger Knee Impact Bolster

WARNING!

- **Being too close to the steering wheel or instrument panel during Advanced Front Air Bag deployment could cause serious injury, including death. Air bags need room to inflate. Sit back, comfortably extending your arms to reach the steering wheel or instrument panel.**
- **Never place a rear-facing child restraint in front of an air bag. A deploying Passenger Advanced Front Air Bag can cause death or serious injury to a child 12 years or younger, including a child in a rear-facing child restraint.**
- **Only use a rear-facing child restraint in a vehicle with a rear seat.**

Advanced Front Air Bag Features

The Advanced Front Air Bag system has multistage driver and front passenger air bags. This system provides output appropriate to the severity and type of collision as determined by the Occupant Restraint Controller (ORC), which may receive information from the front impact sensors or other system components.

The first stage inflator is triggered immediately during an impact that requires air bag deployment. A low energy output is used in less severe collisions. A higher energy output is used for more severe collisions.

This vehicle may be equipped with a driver and/or front passenger seat belt buckle switch that detects whether the driver or front passenger seat belt is buckled. The seat belt buckle switch may adjust the inflation rate of the Advanced Front Air Bags.

WARNING!

- **No objects should be placed over or near the air bag on the instrument panel or steering wheel, because any such objects could cause harm if the vehicle is in a collision severe enough to cause the air bags to inflate.**
- **Do not put anything on or around the air bag covers or attempt to open them manually. You may damage the air bags and you could be injured because the air bags may no longer be functional. The protective covers for the air bag cushions are designed to open only when the air bags are inflating.**
- **Relying on the air bags alone could lead to more severe injuries in a collision. The air bags work with your seat belt to restrain you properly. In some collisions, air bags won't deploy at all. Always wear your seat belts even though you have air bags.**

Advanced Front Air Bag Operation

Advanced Front Air Bags are designed to provide additional protection by supplementing the seat belts. Advanced Front Air Bags are not expected to reduce the risk of injury in rear, side, or rollover collisions. The Advanced Front Air Bags will not deploy in all frontal collisions, including some that may produce substantial vehicle damage — for example, some pole collisions, truck underrides, and angle offset collisions.

On the other hand, depending on the type and location of impact, Advanced Front Air Bags may deploy in crashes with little vehicle front-end damage but that produce a severe initial deceleration.

Because air bag sensors measure vehicle deceleration over time, vehicle speed and damage by themselves are not good indicators of whether or not an air bag should have deployed.

Seat belts are necessary for your protection in all collisions, and also are needed to help keep you in position, away from an inflating air bag.

When the ORC detects a collision requiring the Advanced Front Air Bags, it signals the inflator units. A large quantity of non-toxic gas is generated to inflate the Advanced Front Air Bags.

The steering wheel hub trim cover and the upper right side of the instrument panel separate and fold out of the way as the air bags inflate to their full size. The Advanced Front Air Bags fully inflate in less time than it takes to blink your eyes. The air bags then quickly deflate while helping to restrain the driver and front passenger.

Knee Impact Bolsters

The Knee Impact Bolsters help protect the knees of the driver and front passenger, and position the front occupants for improved interaction with the Advanced Front Air Bags.

WARNING!

- **Do not drill, cut, or tamper with the knee impact bolsters in any way.**
- **Do not mount any accessories to the knee impact bolsters such as alarm lights, stereos, citizen band radios, etc.**

Supplemental Side Air Bags

Your vehicle is equipped with two types of supplemental Side Air Bags:

- **Supplemental Seat-Mounted Side Air Bags (SABs):** Located in the outboard side of the front seats. The SABs are marked with a "SRS AIRBAG" or "AIRBAG" label sewn into the outboard side of the seats.

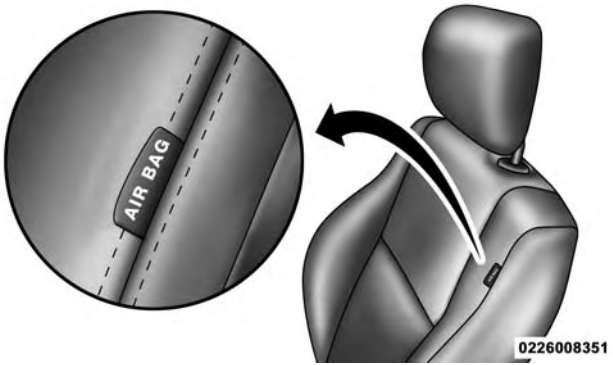

Supplemental Seat-Mounted Side Air Bag Label

The SABs may help to reduce the risk of occupant injury during certain side impacts, in addition to the injury reduction potential provided by the seat belts and body structure.

When the SAB deploys, it opens the seam on the outboard side of the seatback's trim cover. The inflating SAB deploys through the seat seam into the space between the occupant and the door. The SAB moves at a very high speed and with such a high force that it could injure you if you are not seated properly, or if items are positioned in the area where the SAB inflates. Children are at an even greater risk of injury from a deploying air bag.

WARNING!

Do not use accessory seat covers or place objects between you and the Side Air Bags; the performance could be adversely affected and/or objects could be pushed into you, causing serious injury.

- **Supplemental Side Air Bag Inflatable Curtains (SABICs):** Located above the side windows. The trim covering the SABICs is labeled "SRS AIRBAG" or "AIRBAG."

Supplemental Side Air Bag Inflatable Curtain (SABIC) Label Location

SABICs may help reduce the risk of head injury to front and rear seat outboard occupants in certain side impacts. SABICs may reduce the risk of injuries in certain side impacts, in addition to the injury reduction potential provided by the seat belts and body structure.

The SABIC deploys downward, covering the side windows. An inflating SABIC pushes the outside edge of the headliner out of the way and covers the window. The SABICs inflate with enough force to injure you if you are not belted and seated properly, or if items are positioned in the area where the SABICs inflate. Children are at an even greater risk of injury from a deploying air bag.

The SABICs may help reduce the risk of partial or complete ejection of vehicle occupants through side windows in certain side impact events.

WARNING!

- **Your vehicle is equipped with left and right Supplemental Side Air Bag Inflatable Curtains (SABICs). Do not stack luggage or other cargo up high enough to block the deployment of the**

(Continued)

WARNING! ***(Continued)***

SABICs. The trim covering above the side windows where the SABIC and its deployment path are located should remain free from any obstructions.

- **Your vehicle is equipped with SABICs. In order for the SABICs to work as intended, do not install any accessory items in your vehicle which could alter the roof. Do not add an aftermarket sunroof to your vehicle. Do not add roof racks that require permanent attachments (bolts or screws) for installation on the vehicle roof. Do not drill into the roof of the vehicle for any reason.**

The SABICs and SABs ("Side Air Bags") are designed to activate in certain side impacts. The Occupant Restraint Controller ("ORC") determines whether the deployment of the Side Air Bags in a particular impact event is appropriate, based on the severity and type of collision.

The side impact sensors aid the ORC in determining the appropriate response to impact events. The system is calibrated to deploy the Side Air Bags on the impact side of the vehicle during impacts that require Side Air Bag occupant protection. In side impacts, the Side Air Bags deploy independently; a left side impact deploys the left Side Air Bags only and a right-side impact deploys the right Side Air Bags only. Vehicle damage by itself is not a good indicator of whether or not Side Air Bags should have deployed.

The Side Air Bags will not deploy in all side collisions, including some collisions at certain angles, or some side collisions that do not impact the area of the passenger compartment. The Side Air Bags may deploy during angled or offset frontal collisions where the Advanced Front Air Bags deploy.

Side Air Bags are a supplement to the seat belt restraint system. Side Air Bags deploy in less time than it takes to blink your eyes. Occupants, including children, who are up against or very close to Side Air Bags can be seriously injured or killed. Occupants, including children, should never lean on or sleep against the door, side windows, or area where the Side Air Bags inflate, even if they are in an infant or child restraint.

Seat belts (and child restraints where appropriate) are necessary for your protection in all collisions. They also help keep you in position, away from inflating Side Air Bags. To get the best protection from the Side Air Bags, occupants must wear their seat belts properly and sit upright with their backs against the seats. Children must be properly restrained in a child restraint or booster seat that is appropriate for the size of the child.

WARNING!

- **Side Air Bags need room to inflate. Do not lean against the door or window. Sit upright in the center of the seat.**
- **Being too close to the Side Air Bags during deployment could cause you to be severely injured or killed.**
- **Relying on the Side Air Bags alone could lead to more severe injuries in a collision. The Side Air Bags work with your seat belt to restrain you properly. In some collisions, Side Air Bags won't deploy at all. Always wear your seat belt even though you have Side Air Bags.**

NOTE: Air bag covers may not be obvious in the interior trim, but they will open during air bag deployment.

If A Deployment Occurs

The Advanced Front Air Bags are designed to deflate immediately after deployment.

NOTE: Front and/or side air bags will not deploy in all collisions. This does not mean something is wrong with the air bag system.

If you do have a collision which deploys the air bags, any or all of the following may occur:

- The air bag material may sometimes cause abrasions and/or skin reddening to the occupants as the air bags deploy and unfold. The abrasions are similar to friction rope burns or those you might get sliding along a carpet or gymnasium floor. They are not caused by contact with chemicals. They are not permanent and normally heal quickly. However, if you haven't healed significantly within a few days, or if you have any blistering, see your doctor immediately.

- As the air bags deflate, you may see some smoke-like particles. The particles are a normal by-product of the process that generates the non-toxic gas used for air bag inflation. These airborne particles may irritate the skin, eyes, nose, or throat. If you have skin or eye irritation, rinse the area with cool water. For nose or throat irritation, move to fresh air. If the irritation continues, see your doctor. If these particles settle on your clothing, follow the garment manufacturer's instructions for cleaning.

Do not drive your vehicle after the air bags have deployed. If you are involved in another collision, the air bags will not be in place to protect you.

WARNING!

Deployed air bags and seat belt pretensioners cannot protect you in another collision. Have the air bags, seat belt pretensioners, and the seat belt retractor assemblies replaced by an authorized dealer immediately. Also, have the Occupant Restraint Controller System serviced as well.

NOTE:

- Air bag covers may not be obvious in the interior trim, but they will open during air bag deployment.
- After any collision, the vehicle should be taken to an authorized dealer immediately.

Enhanced Accident Response System

In the event of an impact, if the communication network remains intact, and the power remains intact, depending on the nature of the event, the ORC will determine whether to have the Enhanced Accident Response System perform the following functions:

- Cut off fuel to the engine.
- Flash hazard lights as long as the battery has power or until the ignition switch is turned to the "OFF" position.
- Turn on the interior lights, which remain on as long as the battery has power or until the ignition switch is turned to the "OFF" position.
- Unlock the doors automatically.

Air Bag Warning Light

The air bags must be ready to inflate for your protection in a collision. The Occupant Restraint Controller (ORC) monitors the internal circuits and interconnecting wiring associated with air bag system electrical components.

The ORC monitors the readiness of the electronic parts of the air bag system whenever the ignition switch is in the START or ON/RUN position. If the ignition switch is in the OFF position or in the ACC position, the air bag system is not on and the air bags will not inflate.

The ORC contains a backup power supply system that may deploy the air bags even if the battery loses power or it becomes disconnected prior to deployment.

The ORC turns on the Air Bag Warning Light in the instrument panel for approximately four to eight seconds for a self-check when the ignition switch is first turned to the ON/RUN position. After the self-check, the Air Bag Warning Light will turn off. If the ORC detects a malfunction in any part of the system, it turns on the Air Bag Warning Light, either momentarily or continuously. A single chime will sound to alert you if the light comes on again after initial startup.

The ORC also includes diagnostics that will illuminate the instrument panel Air Bag Warning Light if a malfunction is detected that could affect the air bag system. The diagnostics also record the nature of the malfunction. While the air bag system is designed to be maintenance free, if any of the following occurs, have an authorized dealer service the air bag system immediately.

- The Air Bag Warning Light does not come on during the four to eight seconds when the ignition switch is first turned to the ON/RUN position.
- The Air Bag Warning Light remains on after the four to eight-second interval.
- The Air Bag Warning Light comes on intermittently or remains on while driving.

NOTE: If the speedometer, tachometer, or any engine related gauges are not working, the Occupant Restraint Controller (ORC) may also be disabled. In this condition the air bags may not be ready to inflate for your protection. Have an authorized dealer service the air bag system immediately.

WARNING!

Ignoring the Air Bag Warning Light in your instrument panel could mean you won't have the air bags to protect you in a collision. If the light does not come on as a bulb check when the ignition is first placed in the on position, and stays on after you start the vehicle, or if it comes on as you drive, have an authorized dealer service the air bag system immediately.

Redundant Air Bag Warning Light

If a fault with the Air Bag Warning Light is detected, which could affect the Supplemental Restraint System ("SRS"), the Redundant Air Bag Warning Light will illuminate on the instrument panel.

The Redundant Air Bag Warning Light will stay on until the fault is cleared. In addition, a single chime will sound to alert you that the Redundant Air Bag Warning Light has come on and a fault has been detected. If the Redundant Air Bag Warning Light comes on intermittently or remains on while driving have an authorized dealer service the vehicle immediately.

For additional information regarding the Redundant Air Bag Warning Light refer to the "Getting To Know Your Instrument Panel" section of this manual.

Maintaining Your Air Bag System

WARNING!

- **Modifications to any part of the air bag system could cause it to fail when you need it. You could be injured if the air bag system is not there to**

(Continued)

WARNING! ***(Continued)***

protect you. Do not modify the components or wiring, including adding any kind of badges or stickers to the steering wheel hub trim cover or the upper right side of the instrument panel. Do not modify the front bumper, vehicle body structure, or add aftermarket side steps or running boards.

- **It is dangerous to try to repair any part of the air bag system yourself. Be sure to tell anyone who works on your vehicle that it has an air bag system.**
- **Do not attempt to modify any part of your air bag system. The air bag may inflate accidentally or may not function properly if modifications are made. Take your vehicle to an authorized dealer for any air bag system service. If your seat, including your trim cover and cushion, needs to be serviced in any way (including removal or loosening/tightening of**

(Continued)

WARNING! ***(Continued)***

seat attachment bolts), take the vehicle to your authorized dealer. Only manufacturer approved seat accessories may be used. If it is necessary to modify the air bag system for persons with disabilities, contact your authorized dealer.

Event Data Recorder (EDR)

This vehicle is equipped with an event data recorder (EDR). The main purpose of an EDR is to record, in certain crash or near crash-like situations, such as an air bag deployment or hitting a road obstacle, data that will assist in understanding how a vehicle's systems performed. The EDR is designed to record data related to vehicle dynamics and safety systems for a short period of time, typically 30 seconds or less. The EDR in this vehicle is designed to record such data as:

- How various systems in your vehicle were operating

- Whether or not the driver and passenger safety belts were buckled/fastened
- How far (if at all) the driver was depressing the accelerator and/or brake pedal
- How fast the vehicle was traveling

These data can help provide a better understanding of the circumstances in which crashes and injuries occur.

NOTE: EDR data are recorded by your vehicle only if a non-trivial crash situation occurs; no data are recorded by the EDR under normal driving conditions and no personal data (e.g., name, gender, age, and crash location) are recorded. However, other parties, such as law enforcement, could combine the EDR data with the type of personally identifying data routinely acquired during a crash investigation.

To read data recorded by an EDR, special equipment is required, and access to the vehicle or the EDR is needed. In addition to the vehicle manufacturer, other parties, such as law enforcement, that have the special equipment, can read the information if they have access to the vehicle or the EDR.

Child Restraints

Everyone in your vehicle needs to be buckled up at all times, including babies and children.

Every state in the United States, and every Canadian province, requires that small children ride in proper restraint systems. This is the law, and you can be prosecuted for ignoring it.

Children 12 years or younger should ride properly buckled up in a rear seat, if available. According to crash statistics, children are safer when properly restrained in the rear seats rather than in the front.

WARNING!

In a collision, an unrestrained child can become a projectile inside the vehicle. The force required to hold even an infant on your lap could become so great that you could not hold the child, no matter how strong you are. The child and others could be badly injured. Any child riding in your vehicle should be in a proper restraint for the child's size.

There are different sizes and types of restraints for children from newborn size to the child almost large enough for an adult safety belt. Always check the child seat Owner's Manual to make sure you have the correct seat for your child. Carefully read and follow all the instructions and warnings in the child restraint Owner's Manual and on all the labels attached to the child restraint.

Before buying any restraint system, make sure that it has a label certifying that it meets all applicable Safety Standards. You should also make sure that you can install it in the vehicle where you will use it.

NOTE:

- For additional information, refer to www.seatcheck.org or call 1–866–732–8243.
- Canadian residents should refer to Transport Canada's website for additional information: www.tc.gc.ca/eng/motorvehiclesafety/safedrivers-childsafety-index-53.htm

Summary Of Recommendations For Restraining Children In Vehicles

	Child Size, Height, Weight Or Age	Recommended Type Of Child Restraint
Infants and Toddlers	Children who are two years old or younger and who have not reached the height or weight limits of their child restraint	Either an Infant Carrier or a Convertible Child Restraint, facing rearward in the rear seat of the vehicle
Small Children	Children who are at least two years old or who have out-grown the height or weight limit of their rear-facing child restraint	Forward-Facing Child Restraint with a five-point Harness, facing forward in the rear seat of the vehicle
Larger Children	Children who have out-grown their forward-facing child restraint, but are too small to properly fit the vehicle's seat belt	Belt Positioning Booster Seat and the vehicle seat belt, seated in the rear seat of the vehicle
Children Too Large for Child Restraints	Children 12 years old or younger, who have out-grown the height or weight limit of their booster seat	Vehicle Seat Belt, seated in the rear seat of the vehicle

Infants And Child Restraints

Safety experts recommend that children ride rear-facing in the vehicle until they are two years old or until they reach either the height or weight limit of their rear-facing child restraint. Two types of child restraints can be used rear-facing: infant carriers and convertible child seats.

The infant carrier is only used rear-facing in the vehicle. It is recommended for children from birth until they reach the weight or height limit of the infant carrier. Convertible child seats can be used either rear-facing or forward-facing in the vehicle. Convertible child seats often have a higher weight limit in the rear-facing direction than infant carriers do, so they can be used rear-facing by children who have outgrown their infant carrier but are still less than at least two years old. Children should remain rear-facing until they reach the highest weight or height allowed by their convertible child seat.

WARNING!

- **Never place a rear-facing child restraint in front of an air bag. A deploying passenger Advanced Front Air Bag can cause death or serious injury to a child 12 years or younger, including a child in a rear-facing child restraint.**
- **Only use a rear-facing child restraint in a vehicle with a rear seat.**

Older Children And Child Restraints

Children who are two years old or who have outgrown their rear-facing convertible child seat can ride forward-facing in the vehicle. Forward-facing child seats and convertible child seats used in the forward-facing direction are for children who are over two years old or who have outgrown the rear-facing weight or height limit of their rear-facing convertible child seat. Children should

remain in a forward-facing child seat with a harness for as long as possible, up to the highest weight or height allowed by the child seat.

All children whose weight or height is above the forward-facing limit for the child seat should use a belt-positioning booster seat until the vehicle's seat belts fit properly. If the child cannot sit with knees bent over the vehicle's seat cushion while the child's back is against the seatback, they should use a belt-positioning booster seat. The child and belt-positioning booster seat are held in the vehicle by the seat belt.

WARNING!

- **Improper installation can lead to failure of an infant or child restraint. It could come loose in a collision. The child could be badly injured or killed. Follow the child restraint manufacturer's**

(Continued)

WARNING! ***(Continued)***

directions exactly when installing an infant or child restraint.

- **After a child restraint is installed in the vehicle, do not move the vehicle seat forward or rearward because it can loosen the child restraint attachments. Remove the child restraint before adjusting the vehicle seat position. When the vehicle seat has been adjusted, reinstall the child restraint.**
- **When your child restraint is not in use, secure it in the vehicle with the seat belt or LATCH anchorages, or remove it from the vehicle. Do not leave it loose in the vehicle. In a sudden stop or accident, it could strike the occupants or seatbacks and cause serious personal injury.**

Children Too Large For Booster Seats

Children who are large enough to wear the shoulder belt comfortably, and whose legs are long enough to bend over the front of the seat when their back is against the seatback, should use the seat belt in a rear seat. Use this simple 5-step test to decide whether the child can use the vehicle's seat belt alone:

1. Can the child sit all the way back against the back of the vehicle seat?
2. Do the child's knees bend comfortably over the front of the vehicle seat – while they are still sitting all the way back?
3. Does the shoulder belt cross the child's shoulder between their neck and arm?
4. Is the lap part of the belt as low as possible, touching the child's thighs and not their stomach?
5. Can the child stay seated like this for the whole trip?

If the answer to any of these questions was "no," then the child still needs to use a booster seat in this vehicle. If the child is using the lap/shoulder belt, check seat belt fit periodically and make sure the seat belt buckle is latched. A child's squirming or slouching can move the belt out of position. If the shoulder belt contacts the face or neck, move the child closer to the center of the vehicle, or use a booster seat to position the seat belt on the child correctly.

WARNING!

Never allow a child to put the shoulder belt under an arm or behind their back. In a crash, the shoulder belt will not protect a child properly, which may result in serious injury or death. A child must always wear both the lap and shoulder portions of the seat belt correctly.

Installing Child Restraints in Commercial Vehicles

This commercial vehicle is not designed for use as a family vehicle and is not intended for carrying children in the front passenger seat(s). Never install rearward-facing child restraints in this vehicle. Although the seat belt can be locked to secure a child restraint, there are no tether anchorages to complete the proper installation of a forward-facing child restraint. If you must carry a child in a forward-facing child restraint, the passenger seat should be moved to the full rearward position and the child must be in a proper restraint system based on its age, size and weight. Follow the instructions below to secure the child restraint using the seat belt.

WARNING!

Rearward-facing infant restraints must never be secured in the passenger seat of a vehicle with a passenger Air Bag. In a collision, a passenger Air Bag may deploy causing severe injury or death to infants riding in rearward-facing infant restraints.

Installing Child Restraints Using the Vehicle Seat Belt

The seat belts in the passenger seating positions are equipped with a Switchable Automatic Locking Retractor (ALR) that is designed to keep the lap portion of the seat belt tight around the child restraint so that it is not necessary to use a locking clip. The ALR retractor can be “switched” into a locked mode by pulling all of the webbing out of the retractor and then letting the webbing retract back into the retractor. If it is locked, the ALR will make a clicking noise while the webbing is pulled back

into the retractor. Refer to the "Automatic Locking Mode" description under "Occupant Restraints" for additional information on ALR

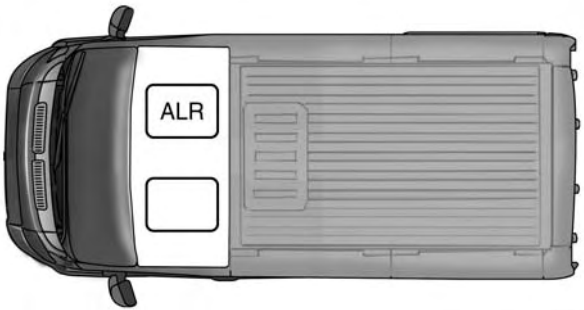

Front Bucket Seat Automatic Locking Retractor (ALR) Location

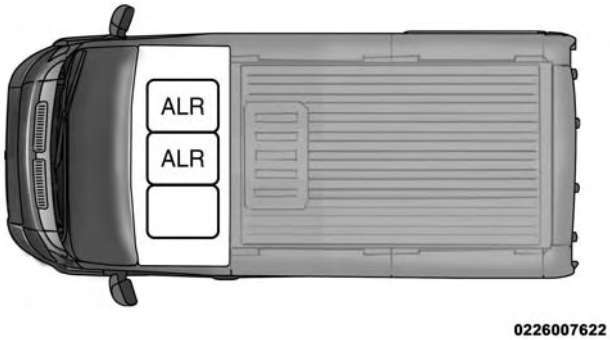

Front Bench Seat Automatic Locking Retractor (ALR) Locations

- ALR = Switchable Automatic Locking Retractor

Installing a Child Restraint with a Switchable Automatic Locking Retractor (ALR):

1. Place the child seat in the center of the seating position. Move the vehicle seat as far rearward as possible to keep the child as far from the advanced passenger air bag as possible.
2. Pull enough of the seat belt webbing from the retractor to pass it through the belt path of the child restraint. Do not twist the belt webbing in the belt path.
3. Slide the latch plate into the buckle until you hear a "click."
4. Pull on the webbing to make the lap portion tight against the child seat.
5. To lock the seat belt, pull down on the shoulder part of the belt until you have pulled all the seat belt webbing out of the retractor. Then, allow the webbing to retract back into the retractor. As the webbing retracts, you will hear a clicking sound. This means the seat belt is now in the Automatic Locking mode.
6. Try to pull the webbing out of the retractor. If it is locked, you should not be able to pull out any webbing. If the retractor is not locked, repeat step 5.
7. Finally, pull up on any excess webbing to tighten the lap portion around the child restraint while you push the child restraint rearward and downward into the vehicle seat.
8. If the child restraint has a top tether strap and the seating position has a top tether anchorage, connect the tether strap to the anchorage and tighten the tether strap. See the section "Installing Child Restraints Using the Top Tether Anchorage" for directions to attach a tether anchor.

9. Test that the child restraint is installed tightly by pulling back and forth on the child seat at the belt path. It should not move more than 1 inch (25.4 mm) in any direction.

Any seat belt system will loosen with time, so check the belt occasionally, and pull it tight if necessary.

Transporting Pets

Air Bags deploying in the front seat could harm your pet. An unrestrained pet will be thrown about and possibly injured, or injure a passenger during panic braking or in a collision.

Pets should be restrained in the rear seat in pet harnesses or pet carriers that are secured by seat belts.

FUEL CUT OFF SWITCH

The vehicle is fitted with a safety switch that, in the event of an accident, comes into operation by cutting off the fuel supply and turning off the engine as a consequence. When the inertia switch cuts in, this cuts off the fuel supply and also activates the hazard warning lights, side lights, and courtesy lights while releasing all the doors and displaying a message; they are deactivated by pushing button A.

NOTE: After an accident, remember to cycle the ignition to the STOP (OFF/LOCK) position and remove the key from the ignition switch to avoid draining the battery. If no fuel leaks or damage to vehicle electrical devices (e.g. headlights) are detected after the impact, reactivate the automatic fuel cut off following the procedure described below.

WARNING!

If, after a crash, you smell fuel or see leaks from the fuel system, do not reset the switches to avoid the risk of fire.

Reactivating the fuel cut off switch:

1. Push the button A to reactivate the fuel cut off switch.

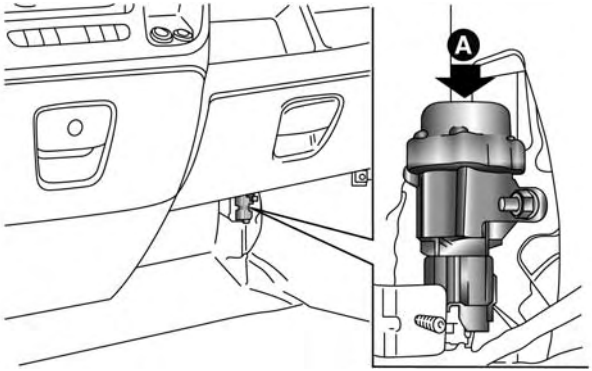

Fuel Cut Off Switch

WARNING!

Before reactivating the fuel cut off switch, carefully check for fuel leaks or damage to vehicle electrical devices (e.g. headlights).

ENGINE BREAK-IN RECOMMENDATIONS

A long break-in period is not required for the engine and drivetrain (transmission and axle) in your vehicle.

Drive moderately during the first 300 miles (500 km). After the initial 60 miles (100 km), speeds up to 50 or 55 mph (80 or 90 km/h) are desirable.

While cruising, brief full-throttle acceleration within the limits of local traffic laws contributes to a good break-in. Wide-open throttle acceleration in low gear can be detrimental and should be avoided.

The engine oil installed in the engine at the factory is a high-quality energy conserving type lubricant. Oil changes should be consistent with anticipated climate conditions under which vehicle operations will occur. For the recommended viscosity and quality grades, refer to "Maintenance Procedures" in "Maintaining Your Vehicle."

CAUTION!

Never use Non-Detergent Oil or Straight Mineral Oil in the engine or damage may result.

NOTE: A new engine may consume some oil during its first few thousand miles (kilometers) of operation. This should be considered a normal part of the break-in and not interpreted as a problem.

SAFETY TIPS

Transporting Passengers

NEVER TRANSPORT PASSENGERS IN THE CARGO AREA.

WARNING!

- **Do not leave children or animals inside parked vehicles in hot weather. Interior heat build-up may cause serious injury or death.**
- **It is extremely dangerous to ride in a cargo area, inside or outside of a vehicle. In a collision, people riding in these areas are more likely to be seriously injured or killed.**
- **Do not allow people to ride in any area of your vehicle that is not equipped with seats and seat belts.**
- **Be sure everyone in your vehicle is in a seat and using a seat belt properly.**

Exhaust Gas

WARNING!

Exhaust gases can injure or kill. They contain carbon monoxide (CO), which is colorless and odorless. Breathing it can make you unconscious and can eventually poison you. To avoid breathing (CO), follow these safety tips:

- **Do not run the engine in a closed garage or in confined areas any longer than needed to move your vehicle in or out of the area.**
- **If you are required to drive with the trunk/liftgate/ rear doors open, make sure that all windows are closed and the climate control BLOWER switch is set at high speed. DO NOT use the recirculation mode.**

(Continued)

WARNING! *(Continued)*

- **If it is necessary to sit in a parked vehicle with the engine running, adjust your heating or cooling controls to force outside air into the vehicle. Set the blower at high speed.**

The best protection against carbon monoxide entry into the vehicle body is a properly maintained engine exhaust system.

Whenever a change is noticed in the sound of the exhaust system, when exhaust fumes can be detected inside the vehicle, or when the underside or rear of the vehicle is damaged, have a competent mechanic inspect the complete exhaust system and adjacent body areas for broken, damaged, deteriorated, or mispositioned parts. Open seams or loose connections could permit exhaust fumes to seep into the passenger compartment. In addition, inspect the exhaust system each time the vehicle is raised for lubrication or oil change. Replace as required.

Safety Checks You Should Make Inside The Vehicle

Seat Belts

Inspect the seat belt system periodically, checking for cuts, frays, and loose parts. Damaged parts must be replaced immediately. Do not disassemble or modify the system.

Front seat belt assemblies must be replaced after a collision. Rear seat belt assemblies must be replaced after a collision if they have been damaged (i.e., bent retractor, torn webbing, etc.). If there is any question regarding seat belt or retractor condition, replace the seat belt.

Air Bag Warning Light

The light should come on and remain on for four to eight seconds as a bulb check when the ignition switch is first turned ON. If the light is

not lit during starting, see your authorized dealer. If the light stays on, flickers, or comes on while driving, have the system checked by an authorized dealer.

Defroster

Check operation by selecting the defrost mode and place the blower control on high speed. You should be able to feel the air directed against the windshield. See your authorized dealer for service if your defroster is inoperable.

Floor Mat Safety Information

Always use floor mats designed to fit the footwell of your vehicle. Use only floor mats that leave the pedal area unobstructed and that are firmly secured so that they cannot slip out of position and interfere with the pedals or impair safe operation of your vehicle in other ways.

WARNING!

Pedals that cannot move freely can cause loss of vehicle control and increase the risk of serious personal injury.

- **Always make sure that floor mats are properly attached to the floor mat fasteners.**
- **Never place or install floor mats or other floor coverings in the vehicle that cannot be properly secured to prevent them from moving and interfering with the pedals or the ability to control the vehicle.**
- **Never put floor mats or other floor coverings on top of already installed floor mats. Additional floor mats and other coverings will reduce the size of the pedal area and interfere with the pedals.**

(Continued)

WARNING! *(Continued)*

- **Check mounting of mats on a regular basis. Always properly reinstall and secure floor mats that have been removed for cleaning.**
- **Always make sure that objects cannot fall into the driver footwell while the vehicle is moving. Objects can become trapped under the brake pedal and accelerator pedal causing a loss of vehicle control.**
- **If required, mounting posts must be properly installed, if not equipped from the factory.**

Failure to properly follow floor mat installation or mounting can cause interference with the brake pedal and accelerator pedal operation causing loss of control of the vehicle.

Periodic Safety Checks You Should Make Outside The Vehicle

Tires

Examine tires for excessive tread wear and uneven wear patterns. Check for stones, nails, glass, or other objects lodged in the tread or sidewall. Inspect the tread for cuts and cracks. Inspect sidewalls for cuts, cracks, and bulges. Check the wheel bolts for tightness. Check the tires (including spare) for proper cold inflation pressure.

Lights

Have someone observe the operation of brake lights and exterior lights while you work the controls. Check turn signal and high beam indicator lights on the instrument panel.

Door Latches

Check for proper closing, latching, and locking.

Fluid Leaks

Check area under vehicle after overnight parking for fuel, engine coolant, oil, or other fluid leaks. Also, if gasoline fumes are detected or if fuel, power steering fluid (if equipped), or brake fluid leaks are suspected. The cause should be located and corrected immediately.

UNDERSTANDING THE FEATURES OF YOUR VEHICLE

CONTENTS

■ MIRRORS 72

□ Inside Day/Night Mirror — If Equipped 72

□ Outside Mirrors 72

□ Outside Mirrors Folding Feature 73

□ Power Mirrors — If Equipped 73

□ Heated Mirrors — If Equipped 74

□ Power Folding Mirrors — If Equipped 74

■ SEATS 76

□ Manual Front Seat Adjustments 76

□ Air Seat — If Equipped 81

□ Swivel Seat — If Equipped 82

□ Flap On Bench — If Equipped 84

□ Underseat Storage Tray (Driver Side Only) — If Equipped 85

□ Heated Seats — If Equipped 85

□ Head Restraints 86

□ Adjustable Armrests — If Equipped 88

■ TO OPEN AND CLOSE THE HOOD 89

■ LIGHTS 91

□ Multifunction Lever. 91

- Headlights 92
- Dimmer Controls 92
- Daytime Running Lights — If Equipped 92
- Battery Saver 93
- Fog Lights — If Equipped 93
- Turn Signals 93
- Parking Lights 94
- Lane Change Assist 94
- High Beam/Low Beam Select Switch 94
- Flash-To-Pass 94
- Follow Me Home/Headlight Delay 94
- Map/Dome/Lights 95
- Cargo Lamp 96

■ WINDSHIELD WIPERS AND WASHERS 97
- Windshield Wipers 97
- Intermittent Wiper System 98
- Low Speed 98
- High Speed 98
- Mist Feature 98
- Windshield Washer Operation 99

■ TELESCOPING STEERING COLUMN 100

■ ELECTRONIC SPEED CONTROL 101
- To Activate 102
- To Set A Desired Speed 102
- To Deactivate 103
- To Resume Speed 103

- To Vary The Speed Setting 103
- To Accelerate For Passing 104

■ PARKSENSE® REAR PARK ASSIST — IF EQUIPPED 105

- ParkSense® Rear Park Assist Sensors. 106
- ParkSense® Rear Park Assist Alerts 107
- ParkSense® Rear Park Assist Failure Indications 109
- Cleaning The ParkSense® Rear Park Assist System 109
- ParkSense® Rear Park Assist System Usage Precautions 110

■ PARKVIEW REAR BACK UP CAMERA — IF EQUIPPED 111

■ OVERHEAD CONSOLE — IF EQUIPPED 114

- Map/Dome/Lights 114

■ POWER OUTLETS — IF EQUIPPED 115

■ CIGAR LIGHTER AND ASH RECEIVER — IF EQUIPPED 118

■ CUPHOLDERS 118

■ STORAGE 119

- Glove Compartments 119
- Front Door Storage — If Equipped 119
- Dash Storage 120
- Dashboard Clipboard. 120

■ CARGO AREA FEATURES 121

- Cargo Area 121

MIRRORS

Inside Day/Night Mirror — If Equipped

A two-point pivot system allows for horizontal and vertical adjustment of the mirror. Adjust the mirror to center on the view through the rear window.

Headlight glare can be reduced by moving the small control under the mirror to the night position (toward the rear of the vehicle). The mirror should be adjusted while set in the day position (toward the windshield).

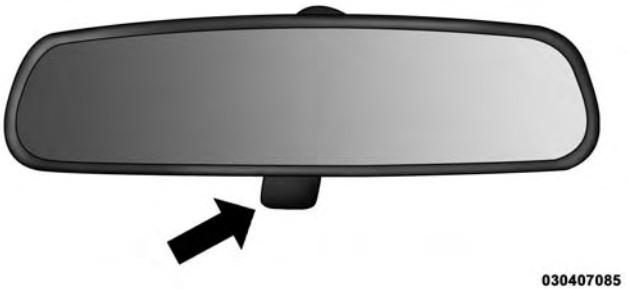

Manual Rearview Mirror

Outside Mirrors

To receive maximum benefit, adjust the outside mirror(s) to center on the adjacent lane of traffic with a slight overlap of the view obtained on the inside mirror.

WARNING!

Vehicles and other objects seen in an outside convex mirror will look smaller and farther away than they really are. Relying too much on side convex mirrors could cause you to collide with another vehicle or other object. Use your inside mirror when judging the size or distance of a vehicle seen in a side convex mirror.

Outside Mirrors Folding Feature

All outside mirrors are hinged and may be moved either forward or rearward to resist damage. The hinges have three detent positions:

- Full forward position
- Full rearward position
- Normal position

Power Mirrors — If Equipped

The power mirror controls are located on the driver-side door trim panel.

Power Mirror Controls

To adjust a mirror, turn the control knob toward the left upper, left lower, right upper or right lower mirror positions indicated by one of the four arrow's on the

switch. Tilt the control wand in the direction you want the mirror to move. When you are finished adjusting the mirror, turn the control to the center position "O" to prevent accidentally moving a mirror.

Heated Mirrors — If Equipped

These mirrors are heated to melt frost or ice. This feature is activated whenever you turn on the rear window defroster button located in the temperature controls. Refer to "Rear Window Features" in "Understanding The Features Of Your Vehicle" for further information.

Power Folding Mirrors — If Equipped

The switch for the power folding mirrors is located on the drivers door panel below the power mirror controls. Push the switch to the right and the mirrors will fold in, push the switch to the left and the mirrors will return to the normal driving position.

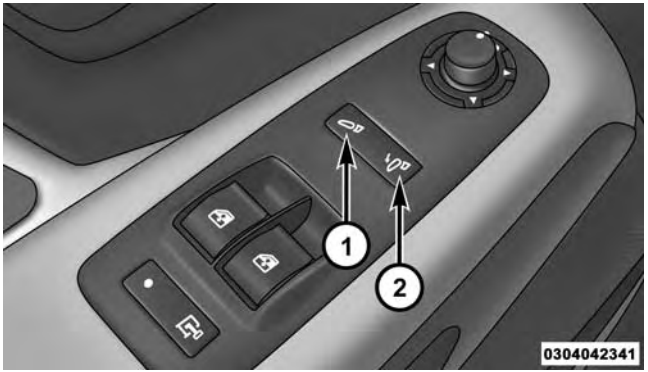

Power Folding Mirror Switch

1 — Power Folding Mirror (Normal Driving Position)
2 — Power Folding Mirror (Fold In Position)

The power fold mirrors are designed to be folded and unfolded using the power folding switch. If the mirrors are manually folded, the mirror head may appear loose.

If the mirror head or pivot exhibits a slight amount of play, the mirror should be power folded closed, then power folded open (this may require multiple button pushes).

NOTE: The intended use of the power fold mirrors is by pushing the buttons to fold and unfold the mirrors. Only manually fold the mirrors when necessary.

Forward Folding

Mirrors can be folded forward manually or by accidental impact. In this case it is possible to restore to position both ways, manually and electrically (as described above).

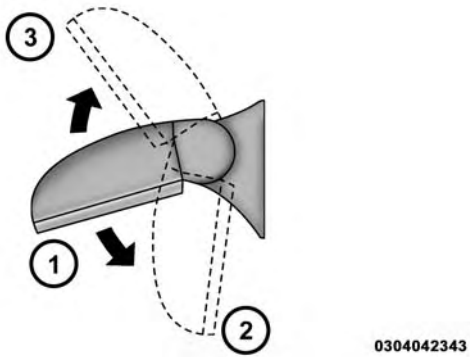

Power/Manual Folding Mirror Positions

1 — Normal Driving Position
2 — Fold In Position
3 — Fold Forward Position

SEATS

Seats are a part of the Occupant Restraint System of the vehicle.

WARNING!

- **It is dangerous to ride in a cargo area, inside or outside of a vehicle. In a collision, people riding in these areas are more likely to be seriously injured or killed.**
- **Do not allow people to ride in any area of your vehicle that is not equipped with seats and seat belts. In a collision, people riding in these areas are more likely to be seriously injured or killed.**
- **Be sure everyone in your vehicle is in a seat and using a seat belt properly.**

Manual Front Seat Adjustments

The driver and passenger seats can be adjusted forward, rearward, reclined, front and rear height and lumbar adjustments.

WARNING!

- **Adjusting a seat while driving may be dangerous. Moving a seat while driving could result in loss of control which could cause a collision and serious injury or death.**
- **Seats should be adjusted before fastening the seat belts and while the vehicle is parked. Serious injury or death could result from a poorly adjusted seat belt.**

Forward And Rearward Adjustment

The adjusting bar is at the front of the seat, near the floor. Pull the bar upward to move the seat forward or rearward. Release the bar once the seat is in the desired position. Then, using body pressure, move forward and rearward on the seat to be sure that the seat adjusters have latched.

Lumbar Support — If Equipped

This feature allows you to increase or decrease the amount of lumbar support. The lumbar control knob is located on the rear upper outboard side of the driver's seatback. Rotate the control forward to increase and rearward to decrease the desired amount of lumbar support.

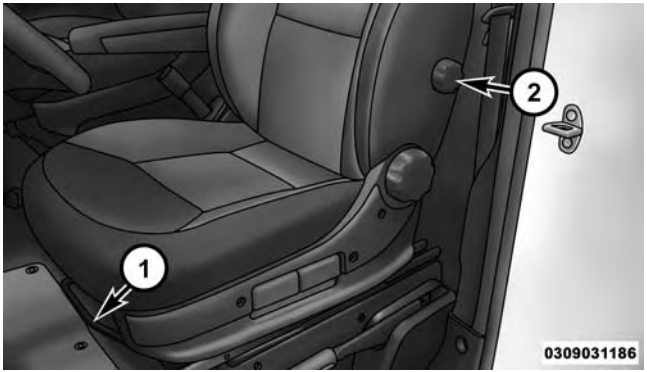

Drivers Seat

1 — Forward/Rearward Adjusting Bar
2 — Lumbar Knob

Height Adjustment (Without Swivel Seat) — If Equipped

The height adjusting levers are located on the center outboard side of the seat. Lift up on the front lever to adjust the front of the seat up or down. Lift up on the rear lever to adjust the rear of the seat up or down.

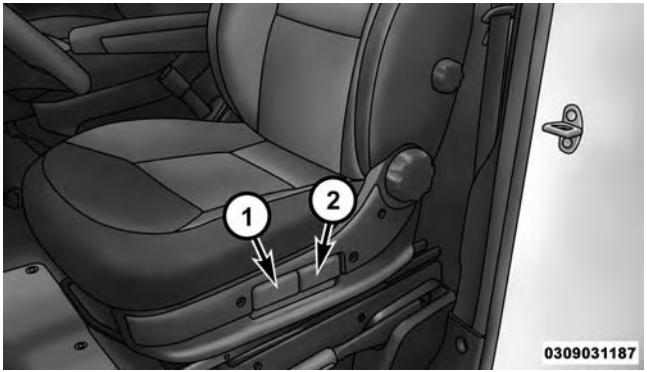

Height Adjustment Levers

1 — Front Height Adjusting Lever
2 — Rear Height Adjusting Lever

Height Adjustment (With Swivel Seat) — If Equipped

The height adjusting knobs are located on the center outboard side of the seat. Rotate the front knob to adjust the front of the seat up or down. Rotate the rear knob to adjust the rear of the seat up or down.

Height Adjustment Knobs

1 — Front Height Adjusting Knob
2 — Rear Height Adjusting Knob

Recliner Adjustment — Without Swivel Seat

The recliner knob is on the rear outboard side of the seat. To recline the seatback, lean back, rotate the knob rearward to position the seatback as desired. To return the seatback to its normal upright position, lean forward, rotate the knob forward until the seatback is in the upright position.

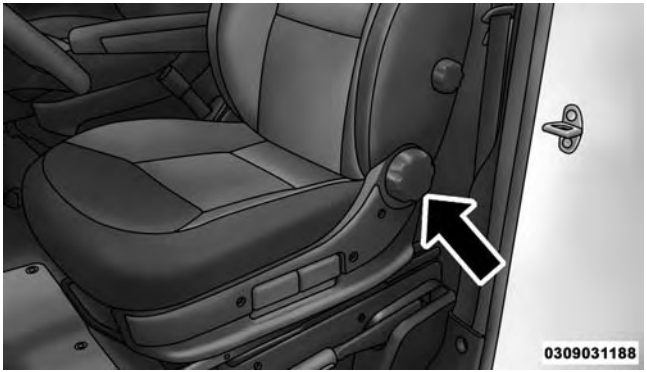

Recliner Knob

Recliner Adjustment — With Swivel Seat

The recliner lever is located at the lower front outboard side of the seat. To recline the seatback, lean forward slightly, pull the lever outward, lean back to the desired position and release the lever. To return the seatback to its normal upright position, lean forward and pull the lever

outward. Release the lever once the seatback is in the upright position.

Recliner Lever

WARNING!

- **Adjusting a seat while the vehicle is moving is dangerous. The sudden movement of the seat could cause you to lose control. The seat belt might not be adjusted properly and you could be injured. Adjust the seat only while the vehicle is parked.**
- **Do not ride with the seatback reclined so that the shoulder belt is no longer resting against your chest. In a collision you could slide under the seat belt and be seriously or even fatally injured. Use the recliner only when the vehicle is parked.**

Air Seat — If Equipped

The seat is equipped with a mechanical spring system and hydraulic shock absorber to ensure maximum comfort and safety. The system of springs also effectively absorbs impact from uneven road surfaces.

Damper Weight Adjustment

Use the weight adjustment knob to set the required setting based on body weight, with settings between 88 lbs (40 kg) and 286 lbs (130 kg).

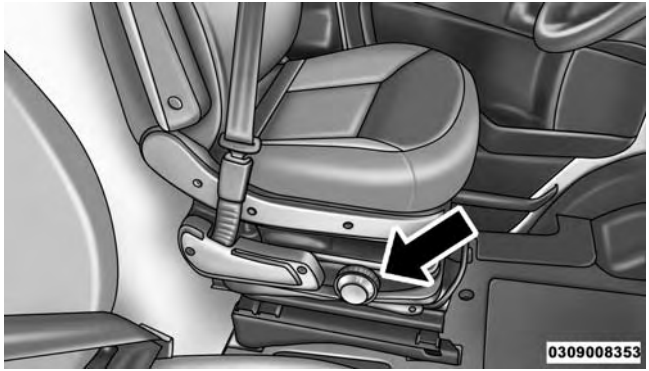

Weight Adjustment Knob

Swivel Seat — If Equipped

The swivel seat lever is located at the lower front inboard side of the seat. The seat may be turned through 180° toward the seat on the opposite side and approximately 35° toward the door. The seat may be locked in the driving position or at the 180° position. To swivel the seat, pull the swivel seat inboard lever outward, turn the seat to the desired position and release the lever. The swivel seat back lever is located at the lower front outboard side of the seat, to tilt the seat back forward or rearward.

If the vehicle is equipped with interlocking swivel seats, the seats must be locked in facing forward position while driving. If the seats are not in the correct position, a warning will display in the EVIC.

If the driver or the passenger seats are not locked in facing forward position before the first vehicle movement, shifting out of park is not allowed until the seats are both locked in facing forward position. When the seats are not in the right position and the first vehicle movement after the cranking is attempted, a chime and a text message will appear in EVIC. Rotate and lock the swivel seats in the correct position before trying again.

If the driver or the passenger seats are not locked in facing forward position during movement of the vehicle, a message will be visualized in the EVIC and an intermittent chime will sound until key-off or until the swivel seats are locked in facing forward position. Stop and move the swivel seats in the correct position before proceeding.

If a fault is present in the system and it is not possible to check the correct position of the swivel seats, a message and the generic warning light appears in the EVIC to inform about the failure. In these conditions, check the status of the swivel seats and not drive the vehicle until the swivel seats are locked in facing forward position.

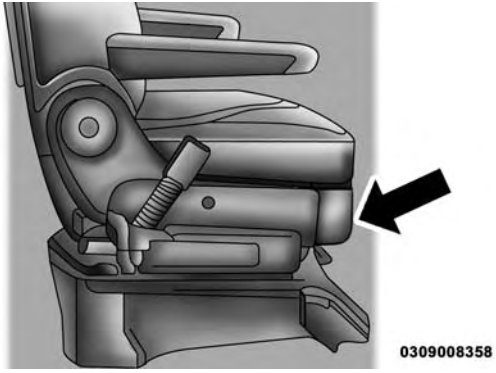

Swivel Seat Lever

Flap On Bench — If Equipped

If your vehicle is equipped with a bench seat, the seat is equipped with a fold-down flap that can be used as a document support surface. To use the fold-down flap, grasp the pull tab and lower the flap.

0309008356

Fold-Down Flap Pull Tab

The fold-down flap is equipped with two cup holders and a support surface with a paper holder clip.

0309008357

Fold-Down Flap

Underseat Storage Tray (Driver Side Only) — If Equipped

A storage tray is located under the drivers seat that can be easily removed by withdrawing the hooks on the support base.

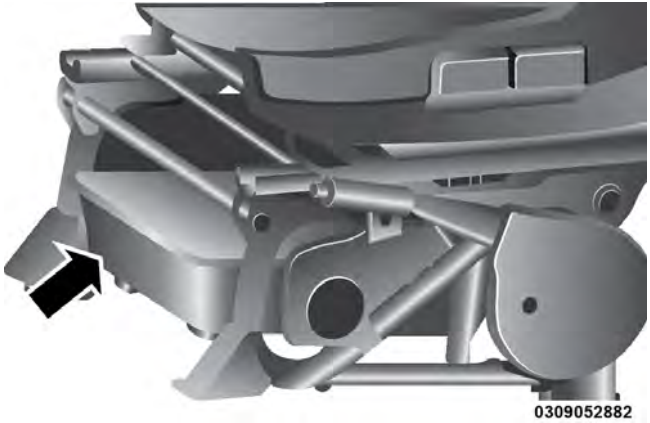

Underseat Storage Tray

Heated Seats — If Equipped

On some models, the front driver and passenger seats may be equipped with heaters in both the seat cushions and seatbacks. The controls for the front heated seats are located on the lower outboard side of the seat.

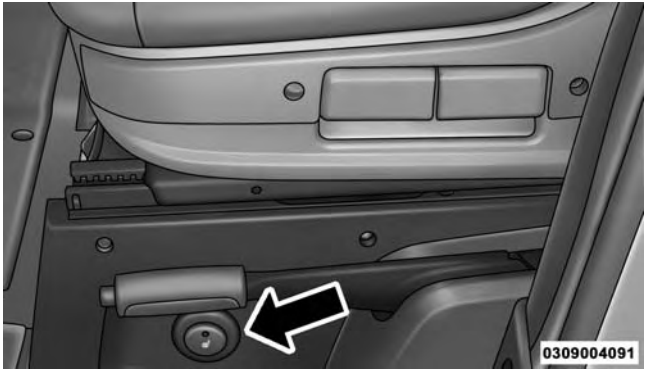

Heated Seat Switch

Push the switch once to turn on the heated seats. Push the switch a second time to shut the heating elements off.

NOTE: Once a heat setting is selected, heat will be felt within two to five minutes.

WARNING!

- **Persons who are unable to feel pain to the skin because of advanced age, chronic illness, diabetes, spinal cord injury, medication, alcohol use, exhaustion or other physical condition must exercise care when using the seat heater. It may cause burns even at low temperatures, especially if used for long periods of time.**

(Continued)

WARNING! ***(Continued)***

- **Do not place anything on the seat or seatback that insulates against heat, such as a blanket or cushion. This may cause the seat heater to overheat. Sitting in a seat that has been overheated could cause serious burns due to the increased surface temperature of the seat.**

Head Restraints

Head restraints are designed to reduce the risk of injury by restricting head movement in the event of a rear impact. Head restraints should be adjusted so that the top of the head restraint is located above the top of your ear.

WARNING!

The head restraints for all occupants must be properly installed and adjusted prior to operating the vehicle or occupying a seat. Head restraints should never be adjusted while the vehicle is in motion. Driving a vehicle with the head restraints improperly adjusted or removed could cause serious injury or death in the event of a collision.

Front Head Restraints

To raise the head restraint pull upward on the head restraint. To lower the head restraint, push the adjustment button located on the base of the head restraint and push downward on the head restraint.

To remove the head restraint, raise it up as far as it can go then push the adjustment button and the release button at the base of each post while pulling the head restraint up. To reinstall the head restraint, put the head restraint posts into the holes then adjust it to the appropriate height.

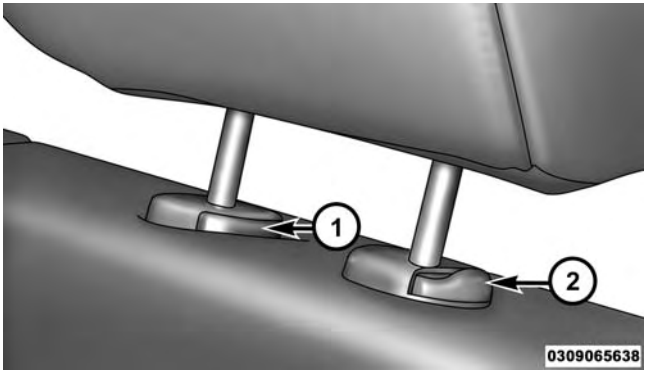

Adjustment Buttons

1 — Release Button
2 — Adjustment Button

WARNING!

- **A loose head restraint thrown forward in a collision or hard stop could cause serious injury or death to occupants of the vehicle. Always securely stow removed head restraints in a location outside the occupant compartment.**
- **ALL the head restraints MUST be reinstalled in the vehicle to properly protect the occupants. Follow the re-installation instructions above prior to operating the vehicle or occupying a seat.**

NOTE: Do not reposition the head restraint 180 degrees to the incorrect position in an attempt to gain additional clearance to the back of the head.

Adjustable Armrests — If Equipped

The seat adjustable armrest can be raised and adjusted for height. Underneath the front of the armrest is the adjuster wheel which will adjust the height of the armrest up or down.

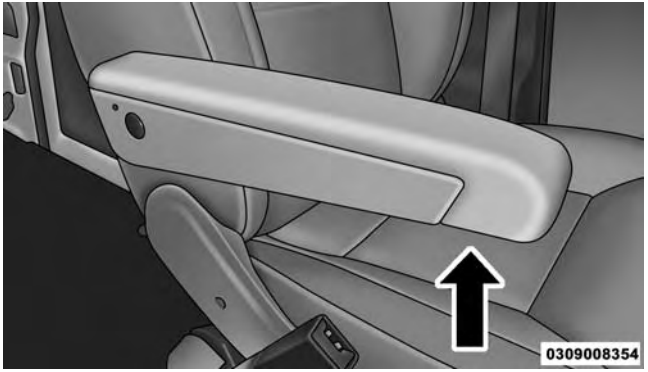

Adjuster Wheel Location

Turn the adjuster wheel to the right or left to adjust the height of the armrest up or down.

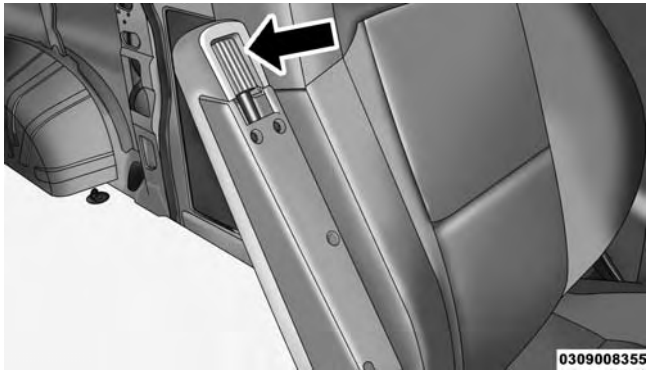

Adjuster Wheel

TO OPEN AND CLOSE THE HOOD

To open the hood, two latches must be released.

1. Open the drivers door to gain access to the hood release lever. Pull the hood release lever located on the side of the instrument panel.

Hood Release

2. Move to the outside of the vehicle, reach into the opening beneath the center of the hood and push the safety latch lever to the right to release it, before raising the hood.

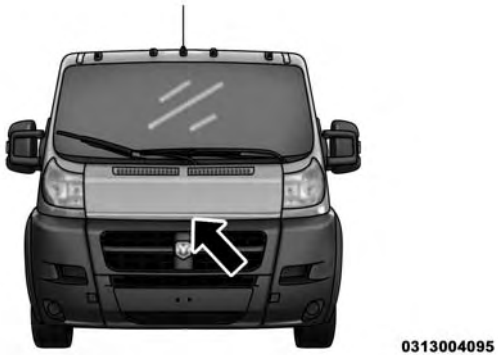

Hood Safety Latch Lever Location

3. Raise the hood and place the hood prop rod in hood slot to secure the hood in the open position.

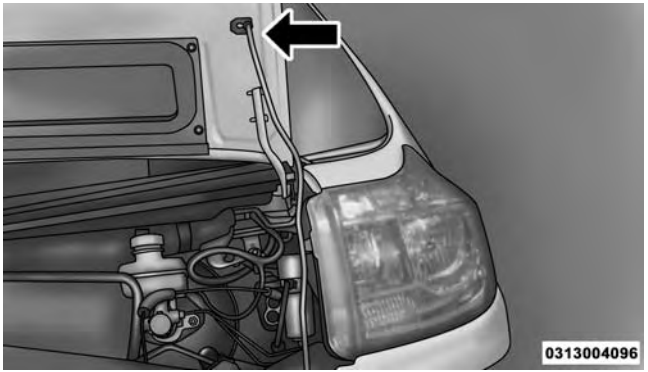

Hood Prop Rod Slot

CAUTION!

To prevent possible damage:

- **Before closing hood, make sure the hood prop rod is fully seated into its storage retaining clips.**

(Continued)

CAUTION! *(Continued)*

- **Do not slam the hood to close it. Use a firm downward push at the center front edge of the hood to ensure that both latches engage. Never drive your vehicle unless the hood is fully closed, with both latches engaged.**

WARNING!

Be sure the hood is fully latched before driving your vehicle. If the hood is not fully latched, it could open when the vehicle is in motion and block your vehicle. Failure to follow this warning could result in serious injury or death.

LIGHTS

Multifunction Lever

The multifunction lever controls the operation of the headlights, parking lights, turn signals, headlight beam selection and the passing lights. The multifunction lever is located on the left side of the steering column.

0314004097

Multifunction Lever

Headlights

To turn on the headlights, turn the end of the multifunction lever to the headlight position. When the headlight switch is on, the parking lights, taillights, license plate light, the clearance lights and instrument panel lights are also turned on. To turn off the headlights, turn the end of the multifunction lever back to the O (Off) position.

Dimmer Controls

The dimmer controls are located on the left side of the instrument panel below the instrument cluster.

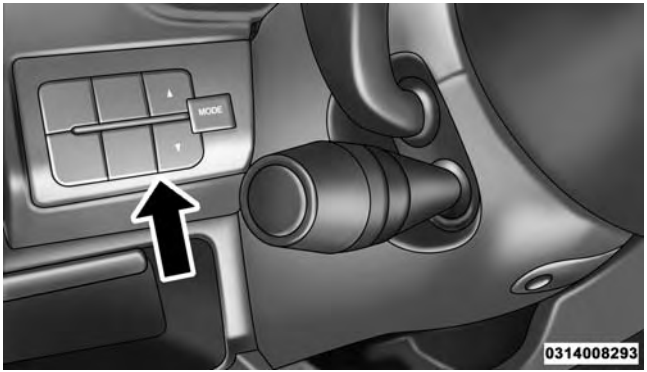

Dimmer Controls

Pushing the up or down arrow will increase or decrease the brightness of the instrument panel lights.

Daytime Running Lights — If Equipped

NOTE: When the headlights are turned on, the Daytime Running Lights will be deactivated.

To activate the Daytime Running Lights (DRL), rotate the end of the multifunction lever to the O (Off) position.

NOTE: The low beams and side/taillights will not be on with DRL. The DRL function may be programmed to be ON or OFF through the Uconnect® system screen if equipped, or through the instrument clusters menu. Refer to "Uconnect® Settings" or "EVIC" in "Understanding Your Instrument Panel" for further information.

The Daytime Running Lights will come on whenever the ignition is ON, the headlight switch is off, the parking brake is off, and the turn signal is off.

Battery Saver

To protect the life of your vehicle's battery when the ignition is OFF and any door is left ajar for 15 minutes the interior lights will automatically turn off.

NOTE: Battery saver mode is cancelled if the ignition is ON.

Fog Lights — If Equipped

The fog light switch is located on the center stack of the instrument panel, just below the climate controls. Push the switch once to turn the fog lights on. Push the switch a second time to turn the fog lights off.

Turn Signals

Move the multifunction lever up or down and the arrows on each side of the instrument cluster flash to show proper operation of the front and rear turn signal lights.

NOTE: If either light remains on and does not flash, or there is a very fast flash rate, check for a defective outside light bulb. If an indicator fails to light when the lever is moved, it would suggest that the indicator bulb is defective.

Parking Lights

These lights can only be turned on with ignition key in the STOP position or removed, by moving the end of the multifunction lever to O (off) position and then to the headlight position.

The warning light telltale in the instrument panel comes on. The lights stay on until the next ignition cycle is performed.

Lane Change Assist

Tap the lever up or down once, without moving beyond the detent, and the turn signal (right or left) will flash five times then automatically turn off.

High Beam/Low Beam Select Switch

Pull the multifunction lever toward you to switch the headlights to high beam. Pull the lever a second time to switch the headlights back to low beam.

Flash-To-Pass

You can signal another vehicle with your headlights by partially pulling the multifunction lever toward the steering wheel. This will cause the high beam headlights to turn on until the lever is released.

Follow Me Home/Headlight Delay

When this feature is selected the driver can choose to have the headlights remain on for a preset period of time.

Activation

Remove the key or turn the ignition to the OFF/LOCK position, and pull the multifunction lever toward the steering wheel, within two minutes. Each time the lever is pulled, the activation of the lights will be extended by 30 seconds. The activation of the lights can be extended to a maximum of 210 seconds.

The warning light on the instrument panel will light up and the corresponding message will appear in the EVIC display for as long as the function is activated. The warning light comes on when the lever is operated and stays on until the function is automatically deactivated. Each movement of the lever only increases the amount of time the lights stay on.

Deactivation

Pull the multifunction lever toward the steering wheel and hold it for more than two seconds.

Map/Dome/Lights

These lights are mounted between the sun visors on the overhead console. Each light is turned on by pushing the corresponding switch.

Left Switch

- Push the left switch to the left to turn OFF the auto dome lights. The dome lights will not automatically turn on when a door is opened.
- Push the left switch to the right to turn ON the dome lights.

Right Switch

- Push the right switch to the left to turn ON the left map light.

- Push the right switch to the right to turn ON the right map light.

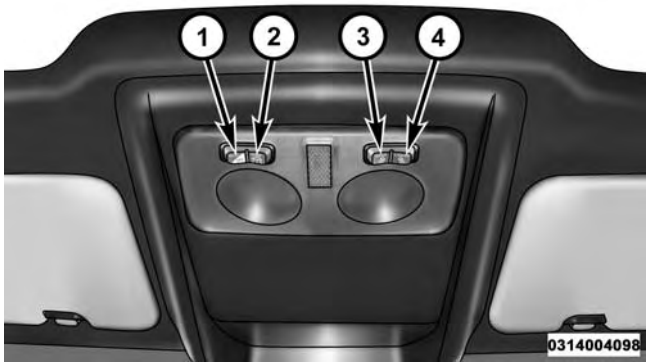

Map/Dome Lights

1 — Auto/Off	3 — Left Map
2 — Dome	4 — Right Map

Cargo Lamp

The Rear Cargo Lamp is located at the upper rear cargo area above the rear doors.

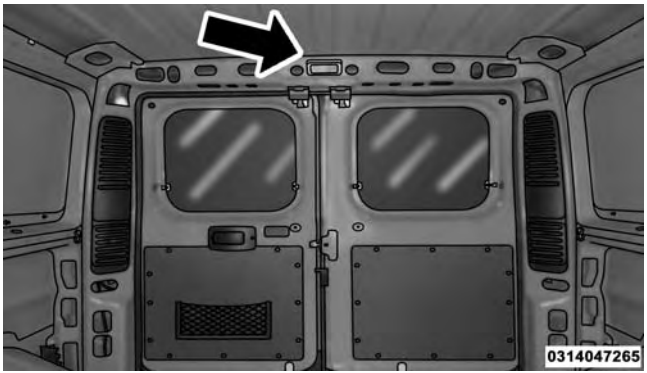

Rear Cargo Lamp

Your vehicle may be equipped with a Side Cargo Lamp located at the upper rear area of the passenger side sliding door opening.

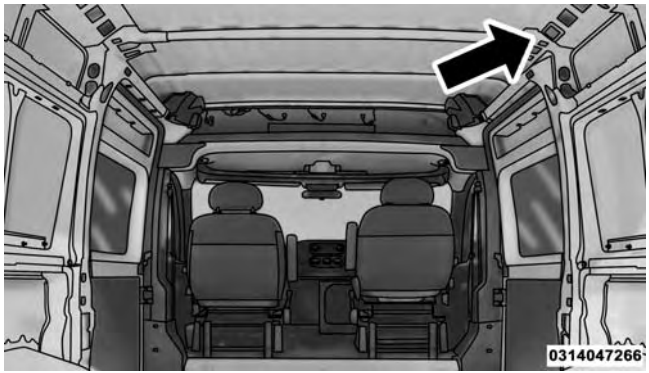

Side Cargo Lamp

The Cargo Lamps can be set to three different positions (Off/Right Position, Center Position, On/Left Position).

- Push the Cargo Lamp lens to the right from its center position and the lamp is always off.
- Leave the Cargo Lamp lens in the center position, and the lamp is turned on and off when the sliding doors or rear doors are opened or closed.
- Push the Cargo Lamp lens to the left from its center position and the lamp is always on.

WINDSHIELD WIPERS AND WASHERS

Windshield Wipers

The windshield wiper/washer lever is located on the right side of the steering column. There are five different modes of operation for the front windshield wipers. The windshield wiper lever can be raised or lowered to access the modes.

NOTE: The windshield wipers/washers will only operate with the ignition in the ON/RUN position.

0315004099

Windshield Wiper/Washer Lever

Intermittent Wiper System

Push the lever downward to the first detent and rotate the center ring to use one of the four intermittent wiper settings when weather conditions make a single wiping cycle, with a variable delay between cycles, desirable.

Low Speed

Push the lever downward to the second detent. The wipers will operate at low speed.

High Speed

Push the lever downward to the third detent. The wipers will operate at high speed.

Mist Feature

Use the Mist feature when weather conditions make occasional usage of the wipers necessary. Push the lever upward to the Mist position and release for a single wiping cycle.

NOTE: The mist feature does not activate the washer pump; therefore, no washer fluid will be sprayed on the windshield. The wash function must be used in order to spray the windshield with washer fluid.

Windshield Washer Operation

To use the washer, pull the windshield wiper/washer lever toward the steering wheel to activate the washers. The wipers will activate automatically for three cycles after the lever is released. and then resume the intermittent interval previously selected.

If the lever is pulled while in the off position, the wipers will operate for three cycles, then turn off.

WARNING!

Sudden loss of visibility through the windshield could lead to a collision. You might not see other vehicles or other obstacles. To avoid sudden icing of the windshield during freezing weather, warm the windshield with the defroster before and during windshield washer use.

TELESCOPING STEERING COLUMN

This feature allows you to lengthen or shorten the steering column. The telescoping control handle is located below the steering wheel at the end of the steering column.

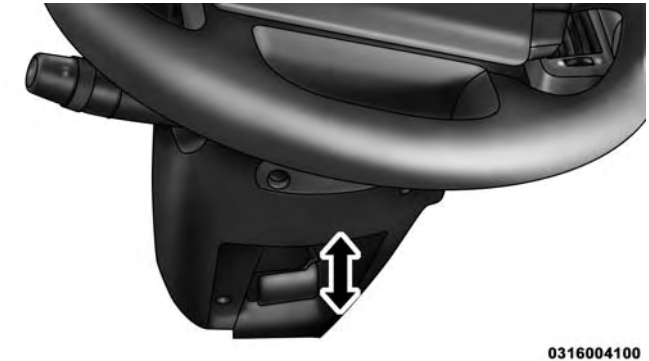

Telescoping Control Handle

To unlock the steering column, pull the control handle up. To lengthen or shorten the steering column, pull the steering wheel outward or push it inward as desired. To lock the steering column in position, push the control handle down until fully engaged.

WARNING!

Do not adjust the steering column while driving. Adjusting the steering column while driving or driving with the steering column unlocked, could cause the driver to lose control of the vehicle. Failure to follow this warning may result in serious injury or death.

ELECTRONIC SPEED CONTROL

When engaged, the Electronic Speed Control takes over accelerator operations at speeds greater than 25 mph (40 km/h) up to the maximum speed of 100 mph (160 km/h).

The Electronic Speed Control Lever is located on the left side of the steering column.

Electronic Speed Control Lever

NOTE: In order to ensure proper operation, the Electronic Speed Control System has been designed to shut down if multiple Speed Control functions are operated at the same time. If this occurs, the Electronic Speed Control System can be reactivated by rotating the Electronic Speed Control ON/OFF center ring and resetting the desired vehicle set speed.

To Activate

Rotate the center ring upward on the electronic speed control lever to turn the system ON. The Cruise Indicator Light in the instrument cluster will illuminate. To turn the system OFF, rotate the center ring upward a second time. The Cruise Indicator Light will turn off. The system should be turned off when not in use.

WARNING!

Leaving the Electronic Speed Control system on when not in use is dangerous. You could accidentally set the system or cause it to go faster than you want. You could lose control and have an accident. Always leave the system OFF when you are not using it.

To Set A Desired Speed

Turn the Electronic Speed Control ON. When the vehicle has reached the desired speed, move the electronic speed control lever upward SET(+) and release. Release the accelerator and the vehicle will operate at the selected speed.

NOTE: The vehicle should be traveling at a steady speed and on level ground before moving the electronic speed control lever upward SET(+).

To Deactivate

A soft tap on the brake pedal, pushing the RES button, or normal brake pressure while slowing the vehicle will deactivate Electronic Speed Control without erasing the set speed memory. Rotating the center ring upward to turn the system OFF or turning the ignition switch OFF erases the set speed memory.

To Resume Speed

To resume a previously set speed, push the RES button and release. Resume can be used at any speed above 20 mph (32 km/h) up to the maximum speed of 100 mph (160 km/h).

To Vary The Speed Setting

To Increase Speed

When the Electronic Speed Control is set, you can increase speed by tapping the Speed Control lever up (+). The drivers preferred units can be selected through the radio settings if equipped. Refer to "Uconnect Settings" in "Understanding Your Instrument Panel" for more information. The speed increment shown is dependant on the chosen speed unit of U.S. (mph) or Metric (km/h):

U.S. Speed (mph)

- Tapping the Speed Control lever up (+) once will result in a 1 mph increase in set speed. Each subsequent tap of the lever results in an increase of 1 mph.
- If the lever is continually held up, the set speed will continue to increase until the lever is released, then the new set speed will be established.

Metric Speed (km/h)

- Tapping the Speed Control lever up (+) once will result in a 1 km/h increase in set speed. Each subsequent tap of the lever results in an increase of 1 km/h.

- If the lever is continually held up, the set speed will continue to increase until the lever is released, then the new set speed will be established.

To Decrease Speed

When the Electronic Speed Control is set, you can decrease speed by tapping the Speed Control lever down (-).

The drivers preferred units can be selected through the radio settings if equipped. Refer to "Uconnect Settings" in "Understanding Your Instrument Panel" for more information. The speed increment shown is dependant on the chosen speed unit of U.S. (mph) or Metric (km/h):

U.S. Speed (mph)

- Tapping the Speed Control lever down (-) once will result in a 1 mph decrease in set speed. Each subsequent tap of the lever results in a decrease of 1 mph.
- If the lever is continually held down, the set speed will continue to decrease until the lever is released, then the new set speed will be established.

Metric Speed (km/h)

- Tapping the Speed Control lever down (-) once will result in a 1 km/h decrease in set speed. Each subsequent tap of the lever results in a decrease of 1 km/h.
- If the lever is continually held down, the set speed will continue to decrease until the lever is released, then the new set speed will be established.

To Accelerate For Passing

Press the accelerator as you would normally. When the pedal is released, the vehicle will return to the set speed.

Using Electronic Speed Control On Hills

The transmission may downshift on hills to maintain the vehicle set speed.

NOTE: The Electronic Speed Control system maintains speed up and down hills. A slight speed change on moderate hills is normal.

On steep hills, a greater speed loss or gain may occur so it may be preferable to drive without Electronic Speed Control.

WARNING!

Electronic Speed Control can be dangerous where the system cannot maintain a constant speed. Your vehicle could go too fast for the conditions, and you could lose control and have an accident. Do not use Electronic Speed Control in heavy traffic or on roads that are winding, icy, snow-covered or slippery.

PARKSENSE® REAR PARK ASSIST — IF EQUIPPED

The ParkSense® Rear Park Assist system provides an audible indication of the distance between the rear fascia/bumper and a detected obstacle when backing up, e.g. during a parking maneuver. Refer to ParkSense® System Usage Precautions for limitations of this system and recommendations.

The ParkSense® Rear Park Assist is automatically activated when the transmission is placed into REVERSE. As the distance from an obstacle behind the vehicle decreases, the audible alert becomes more frequent.

Interaction With Trailer Towing

The Rear Park Assist system is automatically deactivated when a trailer is hitched to the vehicle. The system will be automatically activated as soon as the trailer is removed.

ParkSense® Rear Park Assist Sensors

The four ParkSense® Rear Park Assist sensors, located in the rear fascia/bumper, monitor the area behind the vehicle that is within the sensors' field of view. The sensors can detect obstacles, in the horizontal direction, from approximately 12 in (30 cm) up to 55 in (140 cm) from the center of the rear fascia/bumper and up to 24 in (60 cm) from the corners of the rear fascia/bumper, depending on the location, type and orientation of the obstacle.

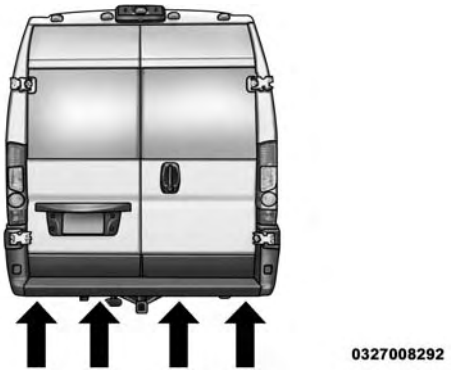

Rear Park Assist Sensors Location

If several obstacles are detected, the ParkSense® Rear Park Assist system indicates the nearest obstacle.

The minimum height of a detectable obstacle corresponds to the maximum height of an obstacle that would clear the underside of the car during the parking maneuver.

ParkSense® Rear Park Assist Alerts

If an obstacle is behind the vehicle when REVERSE gear is engaged, an audible alert is activated.

The tones emitted by the loudspeaker inform the driver that the vehicle is approaching an obstacle. The pauses between the tones are directly proportional to the distance from the obstacle. Pulses emitted in quick succession indicate the presence of a very close obstacle. A continuous tone indicates that the obstacle is less than 12 in (30 cm) away.

Audible And Visual Signals Supplied By The ParkSense® Rear Park Assist System

SIGNAL	MEANING	INDICATION
Obstacle Distance	An obstacle is present within the sensors' field of view	**Audible signal** (dashboard loudspeaker) • Sound pulses emitted at a rate that increases as the distance decreases. • Emits continuous tone at 12 in (30 cm). • Adjustable volume level programmable through personal settings in the EVIC. Refer to "Electronic Vehicle Information Center (EVIC) Setup Menu" in "Understanding Your Instrument Panel".
Failure	Sensor or System failures	**Visual Signal** (instrument panel) • Icon appears on display. • Message is displayed on multifunction display (where provided).

While audible signals are emitted, the audio system is not muted.

The audible signal is turned off immediately if the distance increases. The tone cycle remains constant if the distance measured by the inner sensors is constant. If this condition occurs for the external sensors, the signal is turned off after three seconds (stopping warnings during maneuvers parallel to walls).

ParkSense® Rear Park Assist Failure Indications

A malfunction of the ParkSense® Rear Park Assist sensors or system is indicated, during REVERSE gear engagement, by the instrument panel warning icon.

The warning icon is illuminated and a message is displayed on the multifunction display (if equipped). Refer to “Instrument Cluster Descriptions” in “Understanding Your Instrument Panel” for further information.

The sensors and wiring are tested continuously when the ignition is in the ON/RUN position. Failures are indicated immediately if they occur when the system is ON.

Even if the system is able to identify that a specific sensor is in failure condition, the instrument cluster display shall indicate that the ParkSense® Rear Park Assist system is unavailable, without reference to the sensor in failure condition. If even a single sensor fails, the entire system must be disabled. The system is turned off automatically.

Cleaning The ParkSense® Rear Park Assist System

Clean the ParkSense® Rear Park Assist sensors with water, car wash soap and a soft cloth. Do not use rough or hard cloths. In washing stations, clean sensors quickly keeping the vapor jet/high pressure washing nozzles at least 4 in (10 cm) from the sensors. Do not scratch or poke the sensors. Otherwise, you could damage the sensors.

ParkSense® Rear Park Assist System Usage Precautions

NOTE:

- Ensure that the outer surface and the underside of the rear bumper is clean and clear of snow, ice, mud, dirt or other obstruction to keep the Rear Park Assist system operating properly.
- Jackhammers, large trucks, and other vibrations could affect the performance of Rear Park Assist.
- Clean the Rear Park Assist sensors regularly, taking care not to scratch or damage them. The sensors must not be covered with ice, snow, slush, mud, dirt or debris. Failure to do so can result in the system not working properly. The Rear Park Assist system might not detect an obstacle behind the fascia/bumper, or it could provide a false indication that an obstacle is behind the fascia/bumper.
- Objects such as bicycle carriers, etc., must not be placed within 12 in (30 cm) from the rear fascia/bumper while driving the vehicle. Failure to do so can result in the system misinterpreting a close object as a sensor problem, causing a failure indication to be displayed in the instrument cluster.

CAUTION!

- **ParkSense® is only a parking aid and it is unable to recognize every obstacle, including small obstacles. Parking curbs might be temporarily detected or not detected at all. Obstacles located above or below the sensors will not be detected when they are in close proximity.**
- **The vehicle must be driven slowly when using ParkSense® in order to be able to stop in time when an obstacle is detected. It is recommended that the driver looks over his/her shoulder when using ParkSense®.**

WARNING!

- **Drivers must be careful when backing up even when using ParkSense®. Always check carefully behind your vehicle, look behind you, and be sure to check for pedestrians, animals, other vehicles, obstructions, and blind spots before backing up. You are responsible for safety and must continue to pay attention to your surroundings. Failure to do so can result in serious injury or death.**
- **Before using ParkSense®, it is strongly recommended that the ball mount and hitch ball assembly is disconnected from the vehicle when the vehicle is not used for towing. Failure to do so can result in injury or damage to vehicles or obstacles because the hitch ball will be much closer to the obstacle than the rear fascia when the loudspeaker sounds the continuous tone. Also, the sensors**

(Continued)

WARNING! ***(Continued)***

could detect the ball mount and hitch ball assembly, depending on its size and shape, giving a false indication that an obstacle is behind the vehicle.

If it's necessary to keep the ball mount and hitch ball assembly mounted for a long period, it is possible to filter out the ball mount and hitch ball assembly presence in sensor field of view. The filtering operation must be performed only by an authorized dealer.

PARKVIEW REAR BACK UP CAMERA — IF EQUIPPED

Your vehicle may be equipped with the ParkView Rear Back Up Camera that allows you to see an on-screen image of the rear surroundings of your vehicle whenever the shift lever is put into REVERSE and/or when the rear doors are opened. The image will be displayed on the touchscreen display along with a caution note to "check

entire surroundings" across the top of the screen. After five seconds this note will disappear. The ParkView Rear Back Up Camera is located on the top rear of the vehicle below the center light.

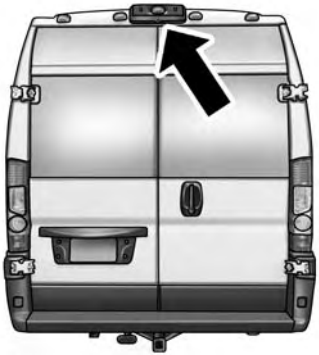

Rear Back Up Camera Location

When the vehicle is shifted out of REVERSE and/or when the rear doors are closed, the rear camera mode is exited and the navigation or audio screen appears again.

When displayed, static grid lines will illustrate the width of the vehicle and will show separate zones that will help indicate the distance to the rear of the vehicle. The following table shows the approximate distances for each zone:

Zone	Distance to the rear of the vehicle
Red	0 - 1 ft (0 - 30 cm)
Yellow	1 ft - 3 ft (30 cm - 1 m)
Green	3 ft or greater (1 m or greater)

NOTE: ParkView Rear Back Up Camera can be enabled or disabled by Uconnect system menu.

WARNING!

Drivers must be careful when backing up even when using the Rear Back Up Camera. Always check carefully behind your vehicle, and be sure to check for pedestrians, animals, other vehicles, obstructions, or blind spots before backing up. You are responsible for the safety of your surroundings and must continue to pay attention while backing up. Failure to do so can result in serious injury or death.

CAUTION!

- **To avoid vehicle damage, ParkView should only be used as a parking aid. The ParkView camera is unable to view every obstacle or object in your drive path.**
- **To avoid vehicle damage, the vehicle must be driven slowly when using ParkView to be able to stop in time when an obstacle is seen. It is recommended that the driver look frequently over his/her shoulder when using ParkView.**

NOTE: If snow, ice, mud, or any foreign substance builds up on the camera lens, clean the lens, rinse with water, and dry with a soft cloth. Do not cover the lens.

OVERHEAD CONSOLE — IF EQUIPPED

The overhead console is located on the headliner above the review mirror. The overhead console contains the following features:

- Automatic Dome Lights
- Dome Lights
- Map Lights

Map/Dome/Lights

These lights are mounted between the sun visors on the overhead console. Each light is turned on by pushing the corresponding switch.

Left Switch

- Push the left switch to the left to turn OFF the auto dome lights. The dome lights will not automatically turn on when a door is opened.
- Push the left switch to the right to turn ON the dome lights.

Right Switch

- Push the right switch to the left to turn ON the left map light.
- Push the right switch to the right to turn ON the right map light.

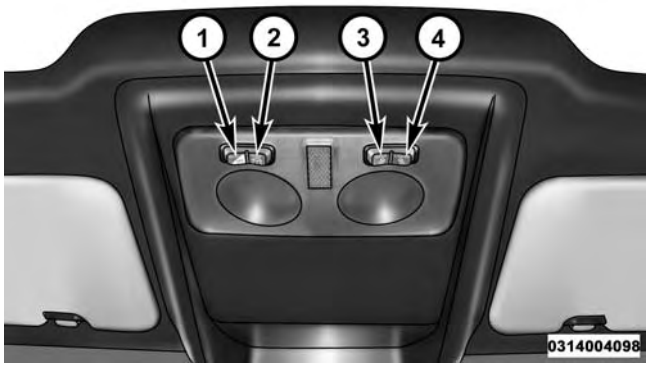

Map/Dome Lights

1 — Auto/Off
2 — Dome
3 — Left Map
4 — Right Map

POWER OUTLETS — IF EQUIPPED

Passenger Compartment Power Outlet

The cigar lighter and the power outlet are located in the center console. It only operates with the ignition key at MAR/ON.

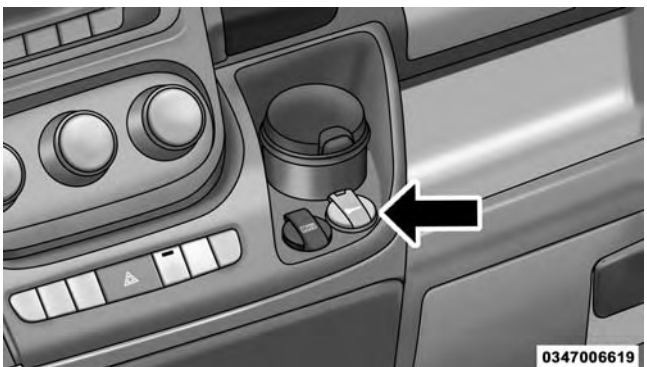

Passenger Compartment Power Outlet

Load Compartment Power Outlet

The Load Compartment Power Outlet is located on the left rear side of the rear cargo compartment. The outlet can be is used for powering 12 Volt adaptive accessories and recharging communications devices.

NOTE: Do not connect devices with power higher than 180 W to the socket. Do not damage the socket by using unsuitable adaptors.

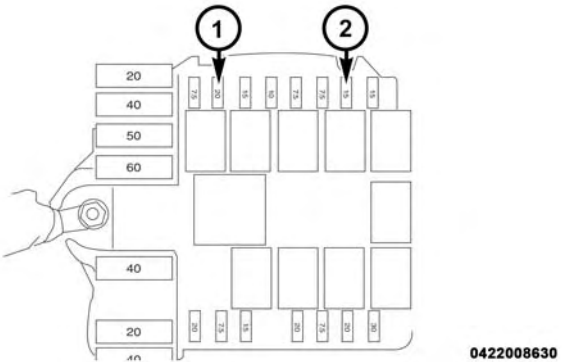

Power Outlet Fuse Locations

1 — F14 Fuse 20 A Yellow Front Power Outlet
2 — F09 Fuse 15 A Blue Rear Power Outlet

WARNING!

To avoid serious injury or death:

- **Only devices designed for use in this type of outlet should be inserted into any 12 Volt outlet.**
- **Do not touch with wet hands.**
- **Close the lid when not in use and while driving the vehicle.**
- **If this outlet is mishandled, it may cause an electric shock and failure.**

CAUTION!

- **Many accessories that can be plugged in draw power from the vehicle's battery, even when not in use (i.e., cellular phones, etc.). Eventually, if plugged in long enough, the vehicle's battery will discharge sufficiently to degrade battery life and/or prevent the engine from starting.**
- **Accessories that draw higher power (i.e., coolers, vacuum cleaners, lights, etc.) will degrade the battery even more quickly. Only use these intermittently and with greater caution.**
- **After the use of high power draw accessories, or long periods of the vehicle not being started (with accessories still plugged in), the vehicle must be driven a sufficient length of time to allow the generator to recharge the vehicle's battery.**

CIGAR LIGHTER AND ASH RECEIVER — IF EQUIPPED

A removable ash receiver and cigar lighter are available.

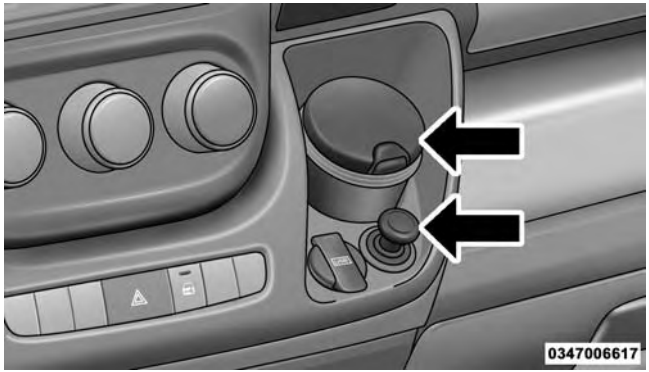

Optional Ash Receiver And Cigar Lighter

CUPHOLDERS

The cupholders for the drivers and passenger area are located near the floor just under the center stack storage compartment. There are cupholders located in each door panel as well as one single cupholder located to the right of the manual climate controls.

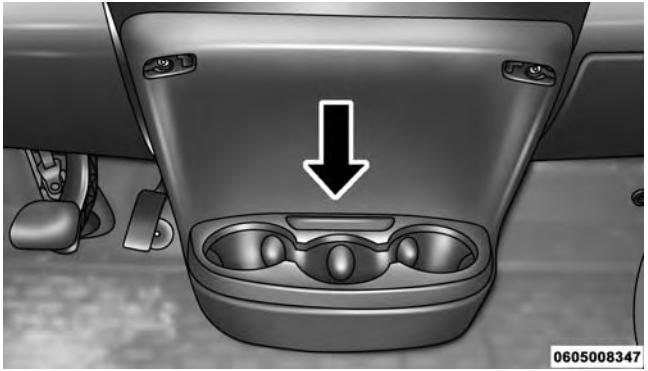

Cupholders

STORAGE

Glove Compartments

The glove compartments are located on the right side of the instrument panel.

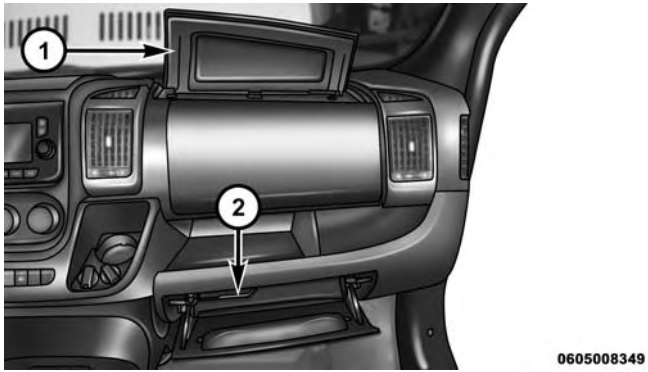

Glove Compartments

1 — Upper Glove Compartment
2 — Lower Glove Compartment

Front Door Storage — If Equipped

Storage areas and bottle holders are located in both the front door trim panels.

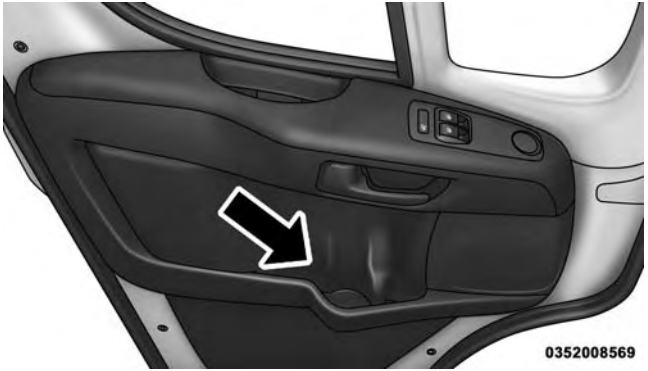

Front Door Storage

Dash Storage

The dash storage is located on the right side of the instrument panel.

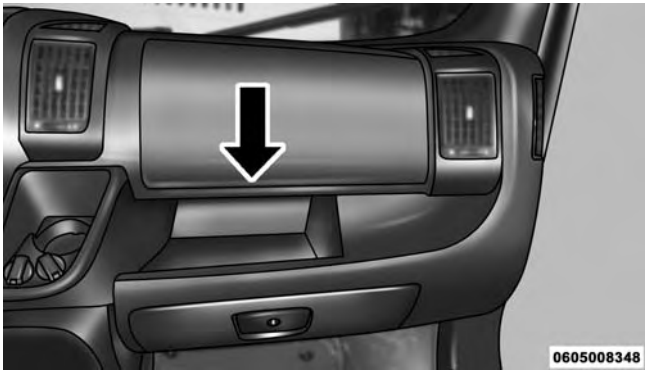

Dash Storage

Dashboard Clipboard

Located on top of the dashboard is a clipboard and two storage bins on each side of the clipboard.

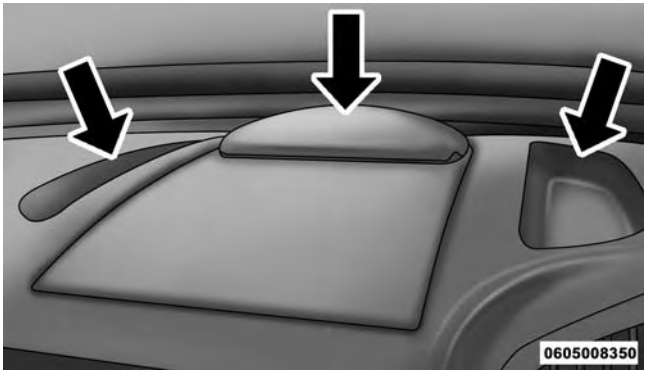

Clipboard And Storage Bins

CARGO AREA FEATURES

Cargo Area

The cargo area may be equipped with different options such as a optional side panels, rear seats and an optional floor.

UNDERSTANDING YOUR INSTRUMENT PANEL

CONTENTS

- INSTRUMENT PANEL FEATURES 126
- INSTRUMENT CLUSTER 127
- INSTRUMENT CLUSTER DESCRIPTIONS 128
- ELECTRONIC VEHICLE INFORMATION CENTER (EVIC) 141
  - Electronic Vehicle Information Center (EVIC) Setup Menu 143
  - Change Engine Oil Indicator System 145
  - Trip Computer 146
  - Trip Button 146
  - Trip Functions 147
  - Values Displayed 147
  - Personal Settings (Customer-Programmable Features) 148
- Uconnect® RH3 149
  - Introduction 149
  - Recommendations 150
  - Identification Number 151
  - Security Code 151
  - General. 152

- Uconnect® RH3 Display 153
- General Functions And Settings 154
- Tuner Mode (AM/FM Radio) 156
- Setup Menu 159
- Clock 160
- USB Mode (MP3/WMA/AAC) 161

■ Uconnect® SETTINGS 169
- Buttons On The Faceplate 170
- Buttons On The Touchscreen 171
- Customer Programmable Features/Personal Settings 171

■ Uconnect® RADIOS 179

■ iPod®/USB/MP3 CONTROL — IF EQUIPPED . .179
- USB Charging Port 180

■ STEERING WHEEL AUDIO CONTROLS 181
- Radio Operation 182

■ CD DISC MAINTENANCE 182

■ RADIO OPERATION AND MOBILE PHONES . .182
- General Information 183

■ CLIMATE CONTROLS 183
- Manual Heating And Air Conditioning 183

■ Uconnect® 5.0 VOICE RECOGNITION QUICK TIPS 189
- Introducing Uconnect® 189
- Get Started 189

□ Basic Voice Commands. 191
□ Radio 192
□ Media. 193
□ Voice Text Reply 194
□ Additional Information 195

INSTRUMENT PANEL FEATURES

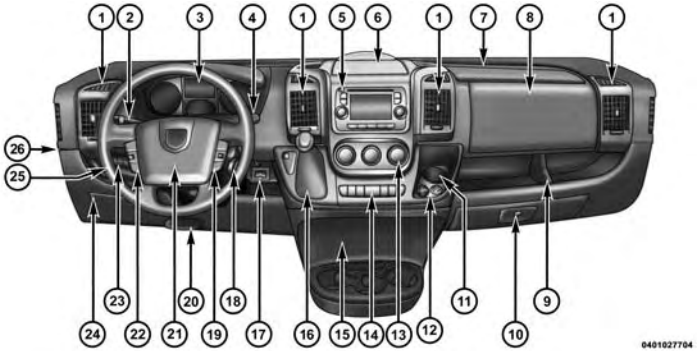

1 — Air Outlet
2 — Multifunction Lever (External Lights)
3 — Instrument Cluster
4 — Multifunction Lever (Front/Rear Wiper, Trip Computer)
5 — Radio
6 — Clip Board
7 — Upper Glove Compartment
8 — Passenger Air Bag
9 — Storage Compartment
10 — Lower Glove Compartment
11 — Cup Holder
12 — USB Charger/12V
13 — Climate Controls
14 — Lower Switch Ban
15 — Cup Holders
16 — Shift Lever
17 — USB / AUX
18 — Ignition Switch
19 — Uconnect® Phone Buttons
20 — Tilt Steering Column Release Lever
21 — Horn
22 — Mute/Uconnect® Voice Command Buttons
23 — Cruise Control Switches
24 — Fuse Box Lid
25 — Electronic Vehicle information Center (EVIC) Controls
26 — Hood Release

INSTRUMENT CLUSTER

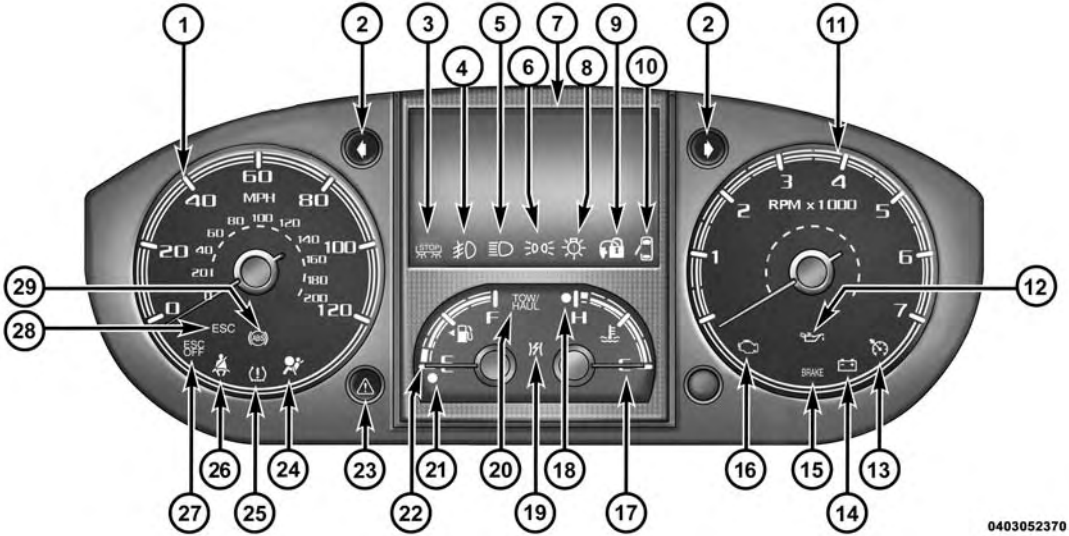

INSTRUMENT CLUSTER DESCRIPTIONS

1. Speedometer

The speedometer shows the vehicle speed in miles per hour (mph) and/or kilometers per hour (km/h).

2. Turn Signal Indicators

The arrow will flash with the exterior turn signal when the turn signal lever is operated.

NOTE:

- Check for an inoperative outside light bulb if either indicator remains on and does not flash or flashes at a rapid rate.

3. Stop Light Failure Indicator

This light will illuminate if one or more of the stop light bulb fails.

The failure relating to this light could be:

- One or more blown bulbs
- A blown protection fuse
- A break in the electrical connection

4. Front Fog Light Indicator — If Equipped

This indicator will illuminate when the front fog lights are on.

5. High Beam Indicator

This light shows that the high beam headlights are on. Pull the multifunction lever toward you to switch the headlights to high beam. Pull the lever a second time to switch the headlights back to low beam.

6. Park/Headlight ON Indicator — If Equipped

This indicator will illuminate when the park lights or headlights are turned on.

7. Odometer/Trip Odometer/Electronic Vehicle Information Center (EVIC) Display Area

This display indicates the total distance the vehicle has been driven.

U.S. Federal regulations require that upon transfer of vehicle ownership, the seller certify to the purchaser the correct mileage that the vehicle has been driven. If your odometer needs to be repaired or serviced, the repair technician should leave the odometer reading the same as it was before the repair or service. If s/he cannot do so, then the odometer must be set at zero, and a sticker must be placed in the door jamb stating what the mileage was before the repair or service. It is a good idea for you to make a record of the odometer reading before the repair/service, so that you can be sure that it is properly reset, or that the door jamb sticker is accurate if the odometer must be reset at zero.

Shift Lever Status (PRND)

The shift lever status "P,R,N,D,1,2,3,4,5,6" are displayed indicating the shift lever position. Telltales "1,2,3,4,5,6" indicate the manual mode has been engaged and the gear selected is displayed. Refer to "Six-Speed Automatic Transmission" in "Starting And Operating" for further information on ERS.

8. External Light Failure Indicator — If Equipped

The External Light Failure Indicator will come on when a failure to one of the following lights is detected:

- Direction Indicators
- Backup Lights
- Parking Lights

- Daytime Running Lights
- Clearance Lights
- License Plate Lights

The failure relating to these lights could be:

- One or more blown bulbs
- A blown protection fuse
- A break in the electrical connection

9. Vehicle Security Light

If during starting, the key code is not correctly recognized, the Vehicle Security Light comes on in the instrument panel. In this case, turn the key to OFF and then to ON/RUN; if it is still locked, try again with the other keys that come with the vehicle. Contact an authorized dealer if you still cannot start the engine.

If with the engine running the warning light flashes, this means that the car is not protected by the engine inhibitor device. Contact an authorized dealer to have all the keys programmed.

10. Door Ajar Indicator

This indicator will illuminate when one or more door(s) are not fully closed.

11. Tachometer

The tachometer indicates engine speed in Revolutions Per Minute (RPM x 1000).

12. Oil Pressure Warning Light

This light indicates low engine oil pressure. The light should turn on momentarily when the engine is started. If the light turns on while driving, stop the vehicle and shut off the engine as soon as possible. A chime will sound when this light turns on.

Do not operate the vehicle until the cause is corrected.

This light does not indicate how much oil is in the engine. The engine oil level must be checked under the hood.

13. Electronic Speed Control Set Indicator Light

This light will turn on when the electronic speed control is set.

14. Charging System Light — If Equipped

This light shows the status of the electrical charging system. The light should come on when the ignition switch is first turned to ON/RUN and remain on briefly as a bulb check. If the Charging System light remains on, or comes on while driving, it means that the vehicle is experiencing a problem with the charging system. OBTAIN SERVICE IMMEDIATELY. See your authorized dealer.

Refer to "Jump Starting Procedures" in "What To Do In Emergencies" if jump starting is required.

15. Brake Warning Light

This light monitors various brake functions, including brake fluid level and parking brake application. If the brake light turns on, it may indicate that the parking brake is applied or that the brake fluid level is low.

If the light remains on when the parking brake has been disengaged, and the fluid level is at the full mark on the master cylinder reservoir, it indicates a possible brake hydraulic system malfunction. In this case, the light will remain on until the condition has been corrected. If the problem is related to the brake booster, the ABS pump will run when applying the brake, and a brake pedal pulsation may be felt during each stop.

The dual brake system provides a reserve braking capacity in the event of a failure to a portion of the hydraulic system. A leak in either half of the dual brake system is

indicated by the Brake Warning Light, which will turn on when the brake fluid level in the master cylinder has dropped below a specified level.

The light will remain on until the cause is corrected.

NOTE: The light may flash momentarily during sharp cornering maneuvers, which change fluid level conditions. The vehicle should have service performed and the brake fluid level checked.

If brake failure is indicated, immediate repair is necessary.

WARNING!

Driving a vehicle with the red brake light on is dangerous. Part of the brake system may have failed. It will take longer to stop the vehicle. You could have a collision. Have the vehicle checked immediately.

Vehicles equipped with ABS are also equipped with Electronic Brake Force Distribution (EBD). In the event of an EBD failure, the Brake Warning Light will turn on along with the ABS Light. Immediate repair to the ABS system is required.

Operation of the Brake Warning Light can be checked by turning the ignition switch from the OFF position to the ON/RUN position. The light should illuminate for approximately two seconds. The light should then turn off unless the parking brake is applied or a brake fault is detected. If the light does not illuminate, have the light inspected by an authorized dealer.

The light also will turn on when the parking brake is applied with the ignition switch in the ON/RUN position.

NOTE: This light shows only that the parking brake is applied. It does not show the degree of brake application.

16. Malfunction Indicator Light (MIL)

The Malfunction Indicator Light (MIL) is part of an onboard diagnostic (OBDII) system which monitors the emissions and engine control system. If the vehicle is ready for emissions testing, the light will come on when the ignition is first turned on and remain on, as a bulb check, until the engine is started. If the vehicle is not ready for emissions testing, the light will come on when the ignition is first turned on and remain on for 15 seconds, then blink for five seconds, and remain on until the vehicle is started. If the bulb does not come on during starting, have the condition investigated promptly.

If this light comes on and remains on while driving, it suggests a potential engine control problem and the need for system service.

Although your vehicle will usually be drivable and not need towing, see your authorized dealer for service as soon as possible.

CAUTION!

Prolonged driving with the Malfunction Indicator Light (MIL) on could cause damage to the engine control system. It also could affect fuel economy and driveability. If the MIL is flashing, severe catalytic converter damage and power loss will soon occur. Immediate service is required.

WARNING!

A malfunctioning catalytic converter, as referenced above, can reach higher temperatures than in normal operating conditions. This can cause a fire if you

(Continued)

WARNING! *(Continued)*

drive slowly or park over flammable substances such as dry plants, wood, cardboard, etc. This could result in death or serious injury to the driver, occupants or others.

17. Temperature Gauge

The temperature gauge shows engine coolant temperature. Any reading within the normal range indicates that the engine cooling system is operating satisfactorily.

The gauge pointer will likely indicate a higher temperature when driving in hot weather, up mountain grades, or when towing a trailer. It should not be allowed to exceed the upper limits of the normal operating range.

CAUTION!

Driving with a hot engine cooling system could damage your vehicle. If the temperature gauge reads "H" pull over and stop the vehicle. Idle the vehicle with the air conditioner turned off until the pointer drops back into the normal range. If the pointer remains on the "H" and you hear continuous chimes, turn the engine off immediately and call an authorized dealer for service.

WARNING!

A hot engine cooling system is dangerous. You or others could be badly burned by steam or boiling coolant. You may want to call an authorized dealer for service if your vehicle overheats. If you decide to look under the hood yourself, see "Maintaining Your

(Continued)

WARNING! ***(Continued)***

Vehicle." Follow the warnings under the "Cooling System Pressure Cap" paragraph.

18. Engine Temperature Warning Light

This light warns of an overheated engine condition. As engine coolant temperatures rise and the gauge approaches **H**, this indicator will illuminate, and a single chime will sound after reaching a set threshold.

If the light turns on while driving, safely pull over and stop the vehicle. If the A/C system is on, turn it off. Also, shift the transmission into NEUTRAL and idle the vehicle. If the temperature reading does not return to normal, turn the engine off immediately and call for service. Refer to "If Your Engine Overheats" in "What To Do In Emergencies" for further information.

19. Electronic Throttle Control (ETC) Light

This light informs you of a problem with the Electronic Throttle Control (ETC) system. If a problem is detected, the light will come on while the engine is running. Cycle the ignition key when the vehicle has completely stopped and the shift lever is placed in the NEUTRAL position, and apply the parking brake. The light should turn off. If the light remains lit with the engine running, your vehicle will usually be drivable. However, see an authorized dealer for service as soon as possible. If the light is flashing when the engine is running, immediate service is required, and you may experience reduced performance, an elevated/rough idle, or engine stall; your vehicle may require towing. The light will come on when the ignition is first turned to ON/RUN and remain on briefly as a bulb check. If the light does not come on during starting, have the system checked by an authorized dealer.

20. TOW/HAUL

This light will illuminate when TOW HAUL mode is selected.

21. Low Fuel Light

When the fuel level reaches approximately 3.0 gal (11.7 L), this light will turn on, and remain on until fuel is added.

22. Fuel Gauge/Fuel Door Reminder

When the ignition switch is in the ON/RUN position, the pointer will show the level of fuel remaining in the fuel tank. The fuel pump symbol points to the side of the vehicle where the fuel door is located.

23. Generic Warning Light

The Generic Warning Light will illuminate if any of the following conditions occur:

- Air Bag Warning Light Fault
- Engine Oil Pressure Sensor Failure
- Fuel Cut Off Intervention/Fail
- Parking Assistance Failure
- Engine Minimum Oil Level
- Engine Minimum Oil Pressure Fail
- Electronic Park Brake Fail Fixed — If Equipped
- Electronic Park Brake Inspection — If Equipped
- Electronic Park Brake Maintenance — If Equipped
- Electronic Park Brake Sensor Fail — If Equipped
- Swivel Seat Malfunction

24. Air Bag Warning Light

This light will turn on for four to eight seconds as a bulb check when the ignition switch is first turned to ON/RUN. If the light is either not on during starting, stays on, or turns on while driving, have the system inspected at an authorized dealer as soon as possible. Refer to "Occupant Restraints" in "Things To Know Before Starting Your Vehicle" for further information.

25. Tire Pressure Monitoring Telltale Light

Each tire, including the spare (if provided), should be checked monthly when cold and inflated to the inflation pressure recommended by the vehicle manufacturer on the vehicle placard or tire inflation pressure label. (If your vehicle has tires of a different size than the size indicated on the vehicle placard or tire inflation pressure label, you should determine the proper tire inflation pressure for those tires).

As an added safety feature, your vehicle has been equipped with a Tire Pressure Monitoring System (TPMS) that illuminates a low tire pressure telltale when one or more of your tires is significantly under-inflated. Accordingly, when the low tire pressure telltale illuminates, you should stop and check your tires as soon as possible, and inflate them to the proper pressure. Driving on a significantly under-inflated tire causes the tire to overheat and can lead to tire failure. Under-inflation also reduces fuel efficiency and tire tread life, and may affect the vehicle's handling and stopping ability.

Please note that the TPMS is not a substitute for proper tire maintenance, and it is the driver's responsibility to maintain correct tire pressure, even if under-inflation has not reached the level to trigger illumination of the TPMS low tire pressure telltale.

Your vehicle has also been equipped with a TPMS malfunction indicator to indicate when the system is not operating properly. The TPMS malfunction indicator is combined with the low tire pressure telltale. When the system detects a malfunction, the telltale will flash for approximately one minute and then remain continuously illuminated. This sequence will continue upon subsequent vehicle start-ups as long as the malfunction exists. When the malfunction indicator is illuminated, the system may not be able to detect or signal low tire pressure as intended. TPMS malfunctions may occur for a variety of reasons, including the installation of replacement or alternate tires or wheels on the vehicle that prevent the TPMS from functioning properly. Always check the TPMS malfunction telltale after replacing one or more tires or wheels on your vehicle to ensure that the replacement or alternate tires and wheels allow the TPMS to continue to function properly.

CAUTION!

The TPMS has been optimized for the original equipment tires and wheels. TPMS pressures and warning have been established for the tire size equipped on your vehicle. Undesirable system operation or sensor damage may result when using replacement equipment that is not of the same size, type, and/or style. Aftermarket wheels can cause sensor damage. Using aftermarket tire sealants may cause the Tire Pressure Monitoring System (TPMS) sensor to become inoperable. After using an aftermarket tire sealant it is recommended that you take your vehicle to an authorized dealership to have your sensor function checked.

NOTE: The TPMS telltale is also accompanied by a "Low Tire" message in the Electronic Vehicle Information Center (EVIC). Refer to "Tire Pressure Monitoring System (TPMS) in "Starting And Operating" for further information.

26. Seat Belt Reminder Light

When the ignition switch is first turned to ON/RUN, this light will turn on for four to eight seconds as a bulb check. During the bulb check, if the driver seat belt is unbuckled, a chime will sound. After the bulb check or when driving, if the driver or front passenger(s) seat belt remains unbuckled, the seat belt reminder light will flash or remain on continuously. Refer to "Occupant Restraints" in "Things To Know Before Starting Your Vehicle" for further information.

27. Electronic Stability Control (ESC) OFF Indicator Light

This light indicates the Electronic Stability Control (ESC) is off. For further information, refer to "Electronic Stability Control (ESC)" in "Starting And Operating."

28. Electronic Stability Control (ESC) Activation/ Malfunction Indicator Light

The "ESC Activation/Malfunction Indicator Light" in the instrument cluster will come on when the ignition switch is turned to the ON/RUN position. It should go out with the engine running. If the "ESC Activation/Malfunction Indicator Light" comes on continuously with the engine running, a malfunction has been detected in the ESC system. If this light remains on after several ignition cycles, and the vehicle has been driven several miles

(kilometers) at speeds greater than 30 mph (48 km/h), see your authorized dealer as soon as possible to have the problem diagnosed and corrected.

NOTE:

- The "ESC Off Indicator Light" and the "ESC Activation/Malfunction Indicator Light" come on momentarily each time the ignition switch is turned to ON/RUN.
- Each time the ignition is turned to ON/RUN, the ESC system will be ON even if it was manually turned off previously.
- The ESC system will make buzzing or clicking sounds and flash the ESC activation light when it is active. This is normal; the sounds will stop when ESC becomes inactive following the maneuver that caused the ESC activation.

29. Anti-Lock Brake (ABS) Light

This light monitors the Anti-lock Brake System (ABS). The light will turn on when the ignition switch is turned to the ON/RUN position and may stay on for as long as four seconds.

If the ABS light remains on or turns on while driving, it indicates that the anti-lock portion of the brake system is not functioning and that service is required. However, the conventional brake system will continue to operate normally if the BRAKE warning light is not on.

If the ABS light is on, the brake system should be serviced as soon as possible to restore the benefits of anti-lock brakes. If the ABS light does not turn on when the ignition switch is turned to the ON/RUN position, have the light inspected by an authorized dealer.

ELECTRONIC VEHICLE INFORMATION CENTER (EVIC)

The Electronic Vehicle Information Center (EVIC) features a driver-interactive display that is located in the instrument cluster.

Electronic Vehicle Information Center (EVIC) Display

This system allows the driver to select a variety of useful information by pushing the switches mounted on the instrument panel. The EVIC Menu items consists of the following:

- Speed Beep
- Trip B Data
- Set Time
- Set Date
- Autoclose
- Units
- Language
- Buzzer Volume
- Seat Belt Buzzer (*)
  - (*) just available after SBR disable made by CHR Service

- Service (Diesel Only)
- DRL - Daytime Running Light (if equipped)
- Exit Menu

The system allows the driver to select information by pushing the following buttons mounted on the instrument panel to the left of the steering column:

EVIC Control Buttons

- ***MODE Button***

Push and HOLD the MODE button for a time longer than 1 second to access/select the information screens or submenu screens of a main menu item. Push and hold the MODE button for two seconds to reset displayed/selected features that can be reset.

- *UP Arrow Button*

  △ Push and release the UP arrow button to scroll upward through the main menu and submenus or adjust the illumination on the instrument panel when the headlights are on.

- *DOWN Arrow Button*

  ▽ Push and release the DOWN arrow button to scroll downward through the main menu and submenus or adjust the illumination on the instrument panel when the headlights are on.

Electronic Vehicle Information Center (EVIC) Setup Menu

The menu comprises a series of functions arranged in a cycle. Push and release the UP △ and DOWN ▽ buttons to access the different options and settings (setup).

The setup menu can be activated by pushing the **MODE** button. Single pushes on the UP △ or DOWN ▽ buttons will scroll through the setup menu options. The menu items include the following functions:

- Speed Beep
- Trip B Data
- Set Time
- Set Data
- Auto Lock
- Units (Distance, Fuel Economy, Temperature)
- Language
- Buzzer Volume
- Seat Belt Buzzer (*)
  - (*) just available after SBR disable made by CHR Service

- Service (Diesel Only)
- DRL - Daytime Running Lights (if equipped)
- Exit menu

NOTE:

- **If equipped with Uconnect® 5.0 radio, some customer programmable features will display in the Uconnect® 5.0 system. Refer to the radio supplement for further Uconnect® 5.0 information.**
- **The EVIC clock setting and Uconnect® 5.0 clock setting procedure can be done through the radio or the EVIC.**

Selecting An Option Of The Main Menu Without Submenu

1. Briefly push and release the **MODE** button to select the main menu option to set.
2. Push and release the UP △ or DOWN ▽ button (by single pushes) to select the new setting.
3. Briefly push and release the **MODE** button to store the new setting and go back to the main menu option previously selected.

Selecting An Option Of The Main Menu With Submenu

1. Briefly push and release the **MODE** button to display the first submenu option.
2. Push and release the UP △ or DOWN ▽ button (by single pushes) to scroll through all the submenu options.
3. Briefly push and release the **MODE** button to select the displayed submenu option and to open the relevant setup menu.

4. Push and release the UP △ or DOWN ▽ button (by single pushes) to select the new setting for this submenu option.
5. Briefly push and release the **MODE** button to store the new setting and go back to the previously selected submenu option.
6. Push and release and hold the **MODE** button to return to the main menu (short hold) or the main screen (longer hold).

Change Engine Oil Indicator System

Change Engine Oil

Your vehicle is equipped with an engine oil change indicator system. The "Change Engine Oil" message will display in the EVIC display. The engine oil change indicator system is duty cycle based, which means the engine oil change interval may fluctuate, dependent upon your personal driving style.

Unless reset, this message will continue to display each time you turn the ignition switch to the ON/RUN position. To turn off the message temporarily, push and release the **MODE** button. To reset the oil change indicator system (after performing the scheduled maintenance), refer to the following procedure.

1. Turn the ignition switch to the ON position (do not start the engine).
2. Fully push the accelerator pedal slowly, three times, within 10 seconds.
3. Turn the ignition switch to the OFF/LOCK position.

NOTE: If the indicator message illuminates when you start the vehicle, the oil change indicator system did not reset. If necessary, repeat this procedure.

Trip Computer

The Trip Computer is located in the instrument cluster. It features a driver-interactive display (displays information such as trip information, range, fuel consumption, average speed, and travel time).

Trip Button

The **TRIP** button, located on the right steering column stalk, can be used to display and to reset the previously described values.

- A short button push displays the different values.
- A long button push resets the system and then starts a new trip.

New Trip

To reset:

- Push and hold the **TRIP** button to reset the system manually.
- When the "Trip distance" reaches 9999.9 miles or kilometers or when the "Travel time" reaches 999.59 (999 hours and 59 minutes), the system is reset automatically.
- Disconnecting/Reconnecting the battery resets the system.

NOTE: If the reset operation occurs in the presence of the screens concerning Trip A or Trip B, only the information associated with Trip A or Trip B functions will be reset.

Start Of Trip Procedure

With the ignition on, push and hold the **TRIP** button for over one second to reset.

Exit Trip

To exit the Trip function, wait until all the values have been displayed or hold the **MENU** button for longer than one second.

Briefly push and release the **MENU** button to go back to the menu screen or push and hold the **MENU** (approximately one second) to go back to the main screen without storing settings.

Trip Functions

Both trip functions are resettable (reset — start of new trip).

"Trip A" can be used to display the figures relating to:

- Range
- Trip distance A
- Average consumption
- Instantaneous consumption
- Average speed A
- Travel time A (driving time)

"Trip B" can be used to display the figures relating to:

- Trip distance B
- Average consumption
- Average speed B
- Travel time B (driving time)

NOTE: "Trip B" functions may be excluded (see "Trip B Data"). "Range" and "Instantaneous consumption" cannot be reset.

Values Displayed

Range

This indicates the distance which may be traveled with the fuel remaining in the tank, assuming that driving conditions will not change. The message "----" will appear on the display in the following cases:

- Distance less than 30 miles (or 50 km).

- The vehicle is parked for a long time with the engine running.

NOTE: The range depends on several factors: driving style, type of route (freeway, residential, mountain roads, etc.), conditions of use of the car (load, tire pressure, etc.). Trip planning must take into account the above notes.

Distance Traveled

This value shows the distance covered since the last reset.

Average Economy

This value shows the approximate average consumption since the last reset.

Instant Economy

This indicates the fuel consumption. The value is constantly updated. The message "----" will appear on the display if the car is parked with the engine running.

Average Speed

This value shows the vehicle's average speed as a function of the overall time elapsed since the last reset.

Travel Time

This value shows the time elapsed since the last reset.

Personal Settings (Customer-Programmable Features)

- Speed Beep
- Trip B Data
- Set Time
- Set Data
- Auto Lock
- Units (Distance, Fuel Economy, Temperature)
- Language

- Buzzer Volume
- Seat Belt Buzzer (*)
  - (*) just available after SBR disable made by CHR Service
- Service (Diesel Only)
- DRL - Daytime Running Light (if equipped)
- Exit menu

NOTE:

- **If equipped with Uconnect® 5.0 radio, some customer programmable features will display in the Uconnect® 5.0 system. Refer to the Uconnect® Settings for further Uconnect® 5.0 information.**
- **The EVIC clock setting and Uconnect® 5.0 clock setting procedure can be done through the radio or the EVIC.**

Uconnect® RH3

Introduction

Your vehicle is equipped with a radio that has an AM/FM radio receiver and a USB port for playing MP3, WMA and AAC files. The device has been designed according to the specific characteristics of the vehicle, with a design matching the style of the instrument panel.

The radio is installed in an ergonomic position for the driver and passenger with a diagram on the front panel that allows the user commands to be identified quickly and easily.

The directions for use are described below, and we advise you to read these carefully.

NOTE: The operation of many of the resources mentioned in this publication depends on technology used by radio stations and other base stations, which may not be available at certain times and/or in particular locations.

Recommendations

Road Safety

We recommend that you learn how to use the various radio features (for example, Station Preset) before you begin your journey.

WARNING!

Turning the volume up too high may be dangerous for the driver and other people on the road. You should adjust the volume so that you are always able to hear sounds around you (e.g. horns, ambulances, police cars, etc.).

Radio Reception

Reception varies constantly while driving.

Reception may be affected by mountains, buildings or bridges, especially when further away from the transmitter of the tuned radio station.

CAUTION!

When listening to traffic news, you may notice louder volume compared to normal playback.

Care And Maintenance

The radio structure is built to guarantee many years of operation without needing maintenance. In case of a fault, contact your local authorized dealer.

Use only a soft, anti-static cloth to clean the front of the radio.

Detergents and waxes can damage the surface.

Identification Number

The radio has a unique identification number (found on the warranty card). This card is required as proof of ownership if the radio is stolen or when seeking assistance. Do not store the warranty card in the vehicle.

Security Code

This radio has a serial number (found on the "warranty card").

Present this card as proof of ownership if the radio is stolen or if you require assistance.

Do not store the warranty card in the vehicle.

If the electrical supply is disrupted, the unit will mute and the display will show "0000" to indicate that you can enter the security code.

You must enter the security (shown on the "warranty card", for example, 4359) code as follows:

Action	Display
When you turn the radio on, the display shows "0000".	0000
Push the number 1 preset button until the first digit of the code number is displayed.	4 - - -
Push the number 2 preset button until the second digit of the code number is displayed.	4 0 - -
Push the number 3 preset button until the third digit of the code number is displayed.	4 3 - -
Push the number 4 preset button until the fourth digit of the code number is displayed.	4 3 0 -
When you finish entering the code, push the POWER button to accept the code entered.	4 3 5 9

If you enter the correct code, the radio will start as normal in radio mode (TUNER). If you enter the wrong code, the radio will remain locked until disconnected from the power supply.

If the car radio power supply is disconnected for approximately eight seconds or longer, you will again be asked for the security code when it is reconnected.

General

The radio offers the following features:

Radio (Tuner Mode)

- Automatic/Manual station tuning
- Manual storage of 30 stations: 18 in the FM band (6 in FM1, 6 in FM2 and 6 in FM3), 6 in the AM1 band and 6 in the AM2 band
- Best stations memory

MP3/WMA/AAC (USB Mode)

- "Last position" memory
- MP3/WMA/AAC track selection (forward/reverse)
- MP3/WMA/AAC track fast forward/reverse
- (RND) RaNDom (music shuffle) function

General

- Separate BASS and TREBLE settings
- BALANCE/FADE (balances left/right and front/rear channels)
- Equalizer
- Loudness
- Digital clock in 24-hour format with weekday setting
- Illuminated buttons and display

- LCD display
- Extended functions field (Setup MENU) allows you to change the default settings

Uconnect® RH3 Display

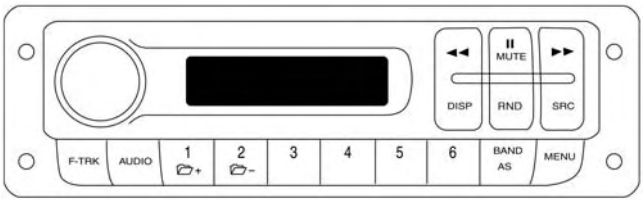

0423009214

RH3 Display Panel

Description Of Commands

Rotary Knob: Turn radio on and off, volume, forward/reverse track, confirm selected option.

▶▶ And ◀◀ Buttons: Station search in automatic mode, station search in manual mode, forward/reverse tracks, forward/reverse within track.

Mute/Pause Button: Interrupts the sound by muting or pausing the audio.

DISP Button: Switches between display modes, clock display.

RND Button: Enables/Disables shuffle play.

SRC Button: Switches the audio source to TUNER. Switches the audio source to USB.

Fast Track Buttons (F-Trk): Fast forward/reverse track (used with the ROTARY knob).

Audio Button: Activates audio setting functions.

Preset Buttons (1 To 6): Store station in memory, access preset stations.

Buttons 1 And 2: Forward/reverse folder.

Band/AS Button: Select tuned frequency band, preset best stations.

Menu Button: Access setup menu.

General Functions And Settings

Turn The Radio On Or Off

To turn the radio on or off, push the ROTARY knob (push once to turn on and hold for about three seconds to turn off), not dependent on the ignition position.

The default radio configuration is "Auto Switch ON" (see SETUP MENU section). In this configuration, the radio will follow two parameters: ignition and previous state. If the ignition is turned off with the radio on, the radio will be turned off, but will come on again when the ignition is turned on. If the ignition is turned off with the radio off, the radio continues to be turned off when the ignition is turned on again.

If you prefer, you can set "Auto Switch OFF" (see SETUP MENU section). The radio will only consider the ignition switch position when it executes the 60 min function: when the ignition is turned off, the radio will display the message "60 MIN" for three seconds and switch off automatically after 60 minutes if no buttons are pushed.

When it is turned on, the radio will display a greeting message. When it is turned off, the radio will display the message "GOOD BYE" before it switches off.

Audio

You can use the AUDIO button to access the available audio settings (described in the sections below).

Equalizer

Pushing the AUDIO button for more than two seconds activates the audio equalizer functions in the following sequence: FLAT ➡ POP ➡ ROCK ➡ CLASSIC ➡ VOCAL ➡ JAZZ ➡ USER ➡ FLAT. Push AUDIO repeatedly to change the equalization. If this button is not pushed again within five seconds, or if you push the ROTARY knob, the display returns to the previously selected view and the settings will be saved.

Custom Audio Setting Functions

Push the AUDIO button for less than two seconds to activate the Balance function.

Repeatedly pushing the AUDIO button activates the other custom audio setting functions in the following sequence: Bass ➡ Treble ➡ Balance ➡ Fader ➡ Loudness ➡ Bass. If this button is not pushed again within five seconds, or if you push the ROTARY knob, the display returns to the previously selected view and the settings will be saved. USER equalization must be selected to activate the Bass and Treble functions.

Bass

The display will show "BASS 00" to indicate that the Bass function can be set. To increase the bass level, turn the ROTARY knob clockwise. To decrease the bass level, turn the ROTARY knob counterclockwise. The bass levels can be set between -15 and 15.

Treble

The display will show "TREB 00" to indicate that the Treble function can be set. To increase the treble level, turn the ROTARY knob clockwise. To decrease the treble level, turn the ROTARY knob counterclockwise. The treble levels can be set between -15 and 15.

Balance

The display will show the message "BAL 00" to indicate that the balance function can be set. Turn the ROTARY knob clockwise to transfer the sound to the right-hand side; the display will show "BAL R 01". Turn the ROTARY knob counterclockwise to transfer the sound to the left-hand side; the display will show "BAL L 01". The balance levels can be set between 0 and 15.

Fader

The display will show "FAD 00" to indicate that you can set the Fader function. Turn the ROTARY knob clockwise to transfer the sound to the front; the display will show "FAD F 01". Turn the ROTARY knob counterclockwise to transfer the sound to the back; the display will show "FAD R 01". The fader levels are set from 0 to 15.

Loudness

The display will show "LOUD 00" to indicate that you can set the loudness (enhanced sound) function. Turn the ROTARY knob clockwise to enable the loudness function at level 1; the display will show "LOUD 01" and the LOUD flag will be enabled. The radio supports three loudness levels.

Volume

Turn the ROTARY knob clockwise to increase the volume. Turning it counterclockwise will lower the volume. The volume can be set between 0 and 30.

Tuner Mode (AM/FM Radio)

When you enter TUNER mode, the radio tunes to the most recently selected station and will remain on the most recently selected frequency band.

In this mode of operation the display will show one of the following 5 codes:

CH (Channel)

When this is on, it indicates that the current radio station preset is stored in memory. The code is only shown when the tuned frequency is showing on the display.

ST (Stereo)

When this is on, it indicates the radio station is transmitting.

Searching for Stations In Automatic Mode

When you push ▶▶ or ◀◀ for less than two seconds, the radio will search for the next valid station. While the radio is searching for the new station, the display will show "SEEKING". When the search is complete, the display will show the tuned frequency band and station in the format "F1 106.9" or, if the station was previously stored in memory, the display will show the channel where it is stored and the tuned station.

Searching for Stations In Manual Mode

Pushing ▶▶ or ◀◀ for more than two seconds displays the selected radio station frequency. Each time a button is pushed, the radio station frequency is increased or decreased according to the default search pattern for the selected band (100 kHz for FM and 10k Hz for AM). When the search button is pushed and held, the radio station frequency will continue to be increased or decreased. If the buttons are not pushed for five seconds, the display will show the message "AUTO" and manual search mode will be canceled. When the search is complete, the display will show the tuned band and station in the format "F1 106.9", or, if the station found was previously stored in memory, the display will show the channel where it is stored and the tuned station.

Mute/Pause

Pushing this button mutes the sound. The display will switch between ″MUTE ON″ and the previous display (3 seconds).

Pushing the button again restores the audio without changing the original volume setting. The display will show ″MUTE OFF″ for three seconds, and then return to the previous display mode.

When the ▶▶ or ◀◀, Audio, 1, 2, 3, 4, 5, 6, BAND/AS buttons and SRC are pushed in ″Mute/Paused″ mode, these will be implemented and the audio will be restored without changing the original volume.

Turn the ROTARY knob to restore the audio and change the volume to the level selected. The display will show the settings described in the volume function.

The other buttons should be implemented when pushed, but the radio will remain in ″MUTE ON″ mode.

Storing Stations In Memory

Push and hold the memory buttons (1 through 6) for more than two seconds to associate the tuned station with the pushed button. The display will show a message in ″MEMO 2″ format for three seconds to confirm that the station has been tuned in. The CH signal is then activated and the display will show the preset number and station frequency for three seconds ″2 106.9″. The display will then return to the previous view.

Accessing Preset Stations

When the preset buttons (1 through 6) are pushed for less than two seconds the radio will tune in to the station associated with that particular memory location. The display shows the preset number and frequency of the associated station for three seconds. The display will then return to the previous view.

Retuning the band: When the BAND/AS button is pushed for less than two seconds, the radio will alternate between bands in the sequence: FM1 ➡ FM2 ➡ FM3 ➡ AM1 ➡ AM2 ➡ FM1. While changing bands from the FM3 band to ➡ AM1, the display will show "AM" for two seconds and when changing from the AM2 band to ➡ FM1, the display will show "FM" for two seconds.

The display will then show the selected band and frequency in the format "F1 106.9" for two seconds and then return to the previous view.

Presetting stations with a strong signal: when the BAND/AS button is pushed for more than two seconds, the radio will search for the 6 best stations and automatically store them in the 6 memory positions of the current band. During the search, the display will indicate "FM AST" or "AM AST", depending on the band selected. To record the stations that are found, these are sorted in ascending order of frequency and the first one is stored in memory position 1, and so on, until positions 1-6 are all in use. If fewer than 6 stations are found, the unused channels will be allocated to the 107.9 MHz frequency for FM and AM 1710 KHz for the AM band. At the end of the search process, the radio tunes in to the first preset position and the display will indicate the associated preset number (1) and the station frequency for three seconds. The display will then return to the previous view.

Setup Menu

You can use the Setup menu to change the various factory settings to suit your own preferences.

Push MENU to activate the Maximum Volume function. Repeatedly pushing this button will activate the other functions in the following sequence: Maximum Volume (MVOL) ➡ Auto Switch (AUTO) ➡ Beep (BEEP) ➡ Set Clock ➡ Maximum Volume (MVOL). If this button or the button for adjusting the selected function

is not pushed for five seconds or if the ROTARY knob is pushed, the display returns to the previous view and the changes will be saved.

Maximum Volume

This function allows you to set the maximum permissible volume. Turn the ROTARY knob to set the volume. The display will show a message in the format "MVOL 26" indicating the maximum volume selected. When the maximum volume selected is the maximum radio volume, the display will show "MVOL OFF".

Auto Switch

This function changes the on/off sequence of the radio as described in the section: "Turning the device on and off." To enable it, turn the ROTARY knob clockwise. The display will show "AUTO ON". To disable it, turn the ROTARY knob counterclockwise and the display will show "AUTO OFF".

Beep

With this feature is enabled, the radio will emit a beep when any knob is activated.

Clock settings

When you select this function, the display will show the clock. To select the field to be set, push ▶▶ or ◀◀. Turn the ROTARY knob to adjust the selected field.

Clock

Pushing the DISP button for more than two seconds enables or disables the clock display. When this feature is enabled, the display shows "CLK ON" and the clock is displayed whenever the ignition is switched on, even if the radio is off. This function takes priority in the display whenever you access any of the radio functions. If no buttons are pushed within 10 seconds, the display will go back to showing the clock. When this function is disabled, the display shows "CLK OFF".

USB Mode (MP3/WMA/AAC)

CAUTION!

To remove devices connected to the USB port, first select the other audio source. Failure to follow this procedure can cause damage to the connected device. Due to the extensive range of makes and models of storage devices available on the market, not all devices have compatibility required for proper functioning of Car Radios. Use only quality USB devices.

Due to the extensive range of brands and models of storage devices available on the market, not all devices are compatible with proper functioning of the car radio.

NOTE: The car radio is only compatible with USB mass storage devices that are fully compatible with the USB 2.0 standard. Use quality USB devices only.

In USB mode, the radio plays MP3, WMA and AAC files stored on the device connected to the USB port that is located on the lower right side of the steering wheel on the instrument panel.

To enter USB mode, you must push the SRC button. When you enter USB mode, the display shows ″LOADING″ while the radio checks whether the connected device is valid.

If there is no USB device, an invalid USB device, or a valid device that is defective, the display will show ″ERR USB″ for two seconds and the radio remains in TUNER mode. If a valid device does not contain any playable files (i.e. MP3, WMA or AAC), the display will show ″NO MUSIC″ for two seconds and the radio remains in TUNER mode.

If playable files are found, the radio will also check that the connected device is the same as the one used immediately before the USB function. If this is the case, music playback will start from the point where it was interrupted (file and music runtime). If not, the file played will be the first valid file, in the sequence shown in the following example:

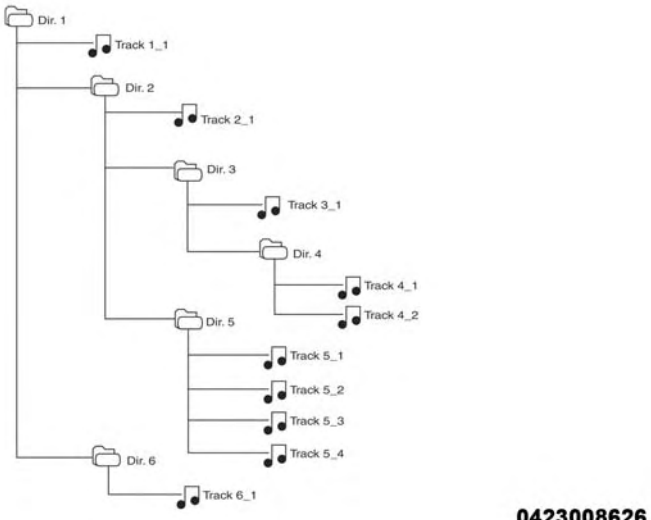

File Sequence

Play Sequence	(File)	Comments
1	Track 1_1	If there are MP3, WMA or AAC (extensions mp3, wma, m4a, mp4 and 3gp) files in the root folder, these will be played first.
2	Track 2_1	Folders within the same level are sorted in ascending order by name (up to folder number 100, after which the order follows that in which they were recorded on the USB device).
3	Track 3_1	
4	Track 4_1	
5	Track 4_2	
6	Track 5_1	Files within a folder are sorted in ascending order by name (up to file number 100, thereafter, the order follows that in which they were recorded on the USB device).
7	Track 5_2	
8	Track 5_3	
9	Track 5_4	
10	Track 6_1	

Forward/Reverse Track

When you push ▶▶ for less than two seconds, the radio will advance to the next audio file on the device. When you push ◀◀ for less than two seconds, the radio will skip back to the beginning of the track. If this button is pushed again, the radio will skip back to the previous audio file on the device.

When these buttons are pushed, the display will show a "TRKyyy" message, where yyy is the track number. If any of these buttons is briefly pushed again, the number in the display will continue changing according to the selected track. While the track is being selected, that is, when ▶▶ or ◀◀ are pushed briefly, the information contained in the ID3 tag will not be processed (the ID3 tag can store information such as the title, artist, album, track number, etc.). If neither ▶▶ or ◀◀ are pushed down and held, the track will be selected and the ID3 tag will be processed and begin playing. In this case, the display will show "TRKyyy" for two seconds and then return to the DISP function view. Whenever the radio switches from one folder to another, the display will show the name of the folder you are moving to for at least 500 ms (seek button movements are ignored during this time), and no longer than three seconds.

When you reach the final song in the last folder and push ▶▶ again, the radio will advance to the first song in the first folder on the USB device. When you reach the first song in the first folder and push ◀◀ again, the radio will advance to the final song in the last folder on the USB device.

Forward/Reverse Along The Track:

When ▶▶ or ◀◀ is pushed for more than two seconds, the radio will reverse or forward the music for as long as the button is held down. The display shows the runtime of the music in the format "003 01:32" (track number and runtime). When the operation is completed, the display will continue to display the music runtime for two seconds. After that it returns to the previous view.

Mute/Pause

Pushing this knob stops music playback and mutes the sound. The display will switch between ″PAUSED″ and the current view (three seconds).

Push this button again to resume music playback from the point where it left off, without changing the original volume level. The display will show ″PLAY″ for three seconds. It then returns to the previous mode.

When ▶▶ or ◀◀, Audio, 1, 2, and SRC are pushed in ″Mute/Paused″ mode, playback (where applicable) will resume and the sound will be restored without changing the original volume level.

Turn the ROTARY knob to resume playing the music and change the volume accordingly. The display will feature the information described in the volume function.

Pushing the F-TRACK button will not resume play, but using the (F-TRK + rotation) function will start or resume play.

The other buttons should be implemented when pushed, but the radio will remain in ″Mute/Paused″ mode.

Fast Track: Pushing the F-TRK button activates FAST TRACK mode and the display will show the name of the current folder. If the ROTARY knob is not activated, the radio returns to its previous state.

If the ROTARY knob is turned, the display shows the ″TRKyyy″ message, where yyy is the track number. Turning the knob clockwise will forwards the tracks and turning it counterclockwise will reverse the tracks. While this is being performed, the information contained in the ID3 tag is not processed. As the knob is turned, the ″TRKyyy″ message changes to the track selected.

When the ROTARY knob is pushed or if its position is not changed for five seconds, the track is selected, the ID3 tag is processed and the music will start playing. In this case, the display will show the "TRKyyy" message for two seconds and then return to the default display defined by the DISP function.

When the radio skips from one folder to another, the display will show the name of the folder to which you are moving for a few milliseconds (the rotary movements are ignored during this period) and a maximum of three seconds. When you reach the final track in the last folder and turn the ROTARY knob clockwise, the radio will advance to the first track in the first folder on the USB device. When you reach the first track in the first folder and turn the ROTARY knob counterclockwise, the radio will advance to the last track in the last folder on the USB device.

Forward/Reverse Folder

When you push the memory 1 button, the radio will advance to the first track in the next folder containing audio files, if you push button 2, the radio will return to the first track in the previous folder containing audio files.

When this operation is complete, the display shows the name of the selected folder. If you push any of these buttons again quickly, the name shown is updated as you select folders on the USB device. While the track is being selected, that is, when you push buttons 1 or 2 quickly, the information contained in ID3 tag is not processed. If you do not push and hold 1 or 2, the track is selected, the ID3 tag is processed and the music will start playing. In this case, the display will continue showing the name of the selected folder for two seconds and then return to the default display defined by the DISP function.

Whenever the radio skips from one folder to another, the display will show the name of the folder to which you are going for a few milliseconds (the rotary movements are ignored during this period) and a maximum of three seconds. When you reach the last folder and push Button 1 again, the radio will advance to the next folder on the USB device. When you reach the first folder and push Button 2 again, the radio will advance to the next folder on the USB device.

Shuffle (Random Playback)

Pushing the RND button enables or disables the "shuffle" feature. When enabled, the RND indicator is switched on and the display will show "RND ON" for two seconds. The display will then revert to the previous view.

When you push this button again, the function is disabled, the RND indicator is turned off and the display will show "RND OFF" for two seconds. The display then reverts to the previous view.

If the RND function is enabled, the music forward/reverse will be random, both in normal mode and Fast Track mode. In this case, Buttons 1 and 2 (forward/reverse folder) have the exact same function as ►► or ◄◄ (music forward/reverse), respectively.

Switching Between Display Modes

When you push the DISP button for less than two seconds, information about the track being played will alternate in the following sequence: Track ➡ Time ➡ Title ➡ Album ➡ Artist ➡ File ➡ Folder ➡ Track. At the first touch of the button, the display now shows the information type related to the track being played, for example, if the current information is track, the display will show "TIME". If you push any other buttons or if the DISP button is not pushed for two seconds, the information type that is on the display will be selected. When the file that is being played does not contain the selected information, the radio will display "NO NAME."

Uconnect® SETTINGS

The Uconnect® system uses a combination of buttons on the touchscreen and buttons on the faceplate located on the center of the instrument panel that allows you to access and change the customer programmable features. Many features can vary by vehicle.

CAUTION!

Do NOT attach any object to the touchscreen, doing so can result in damage to the touchscreen.

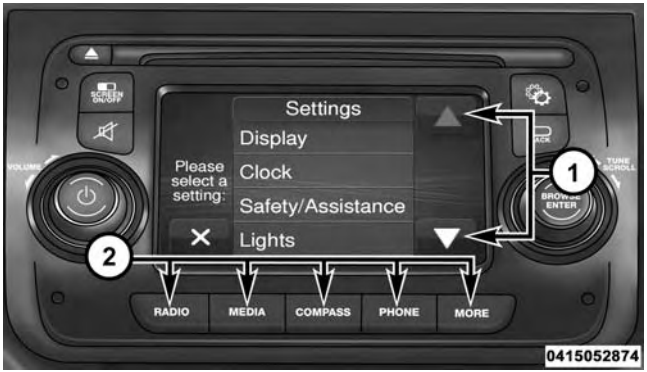

Uconnect® 5.0 Buttons On The Touchscreen And Buttons On The Faceplate

1 — Uconnect® Buttons On The Touchscreen
2 — Uconnect® Buttons On The Faceplate

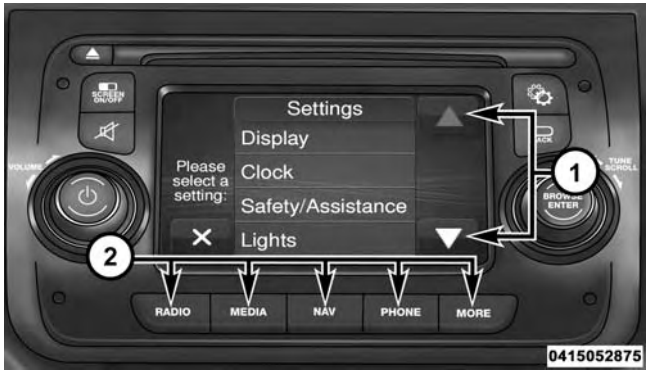

Uconnect® 5.0N Buttons On The Touchscreen And Buttons On The Faceplate

1 — Uconnect® Buttons On The Touchscreen
2 — Uconnect® Buttons On The Faceplate

Buttons On The Faceplate

Buttons on the faceplate are located below the Uconnect® system in the center of the instrument panel. In addition, there is a Scroll/Enter control knob located on the right side. Turn the control knob to scroll through menus and change settings (i.e., 30, 60, 90), push the center of the control knob one or more times to select or change a setting (i.e., ON, OFF).

Your Uconnect® system may also have a Screen Off and Back buttons on the faceplate.

Push the Screen Off button on the faceplate to turn off the Uconnect® screen. Push the Screen Off button on the faceplate a second time to turn the screen on.

Push the Back button on the faceplate to exit out of a Menu or certain option on the Uconnect® system.

Buttons On The Touchscreen

Buttons on the touchscreen are accessible on the Uconnect® display.

Customer Programmable Features/Personal Settings

Push the Settings button on the faceplate to display the menu setting screen. In this mode the Uconnect® system allows you to access programmable features that may be equipped such as Display, Clock & Date, Safety & Driving Assistance (if equipped), Lights, Doors & Locks, Audio, Phone/Bluetooth®, SiriusXM Setup (if equipped), Restore Settings (if equipped).

NOTE:

- Only one category may be selected at a time.
- The Back arrow will change into a Done button if any changes are made.

When making a selection, press the button on the touchscreen to enter the desired mode. Once in the desired mode, press and release the preferred setting. Once the setting is complete, either press the Back Arrow button on the touchscreen or the Back button on the faceplate to return to the previous menu or press the X button on the touchscreen to return to the Main Settings screen. Pressing the Up or Down Arrow buttons on the touchscreen on the right side of the screen will allow you to toggle up or down through the available settings.

Display

After pressing the Display button on the touchscreen the following settings will be available:

- ***Display Mode***

Press the display mode button to set the display brightness according to day, night or auto condition. In auto mode the display brightness is aligned to that of the instrument panel.

- ***Display Brightness With Headlights ON***

This feature allows you to select the display brightness when the headlights are on. Adjust the brightness with the "Up" or "Down" arrow buttons on the touchscreen. Then press the back arrow/Done button on the touchscreen, or push the back button on the faceplate.

- ***Display Brightness With the Headlights Off***

This feature allows you to select the display brightness when the headlights are off. Adjust the brightness with the "Up" or "Down" arrow buttons on the touchscreen. Then press the back arrow/Done button on the touchscreen, or push the back button on the faceplate.

- ***Set Language***

This feature allows you to select one of multiple languages for all display nomenclature, including the trip functions and the navigation system (if equipped). Press the Set Language button on the touchscreen, then press the desired language button. The button will highlight showing that setting has been selected. Press the arrow back/Done button on the touchscreen to return to the previous menu.

- ***Touchscreen Beep***

This feature allows you to turn on or shut off the sound heard when a button on the touchscreen is pressed. To make your selection, press the "Touchscreen Beep" button on the touchscreen, then choose "Yes" or "No." The button will highlight indicating that the setting has been selected. Press the back arrow/Done button on the touchscreen to return to the previous menu.

- ***Display Trip B***

Press the relevant button to activate/deactivate the displaying of the Trip B on the instrument panel display.

- *Units — If Equipped*

Press the Units button to select the correct unit for Temperature (°F or °C), Distance (mi or km) and Fuel Consumption. If the distance is in mi (miles), miles per gallon (mpg) are set automatically. If the distance is km, km/1 or 1/100km can be selected.

- *Voice Response Length*

This feature allows you to change the Voice Response Length settings. To change the Voice Response Length, press the Brief or Detailed button on the touchscreen The button will highlight showing that setting has been selected. Press the back arrow/Done button on the touchscreen to return to the previous menu.

Clock & Date

After pressing the Clock button on the touchscreen the following settings will be available:

- *Sync Time With GPS*

This feature allows you to automatically have the radio set the time. To change the Sync Time setting, press the "Sync with GPS Time" button on the touchscreen. The button will highlight showing that setting has been selected. Press the back arrow/Done button on the touchscreen to return to the previous menu, or push the back button on the faceplate.

- *Set Time Hours*

This feature allows you to adjust the hours. The "Sync with GPS Time" button on the touchscreen must be unchecked. To make your selection, press the "Up" or "Down" arrow buttons on the touchscreen to adjust the hours up or down. Press the back arrow/Done button on the touchscreen to return to the previous menu or press the "X" button on the touchscreen to close out of the settings screen.

- *Set Time Minutes*

This feature allows you to adjust the minutes. The "Sync with GPS Time" button on the touchscreen must be unchecked. To make your selection, press the "Up" or "Down" arrow buttons on the touchscreen to adjust the minutes up or down. Press the back arrow/Done button on the touchscreen to return to the previous menu or press the "X" button on the touchscreen to close out of the settings screen.

- *Show Time In Status Bar — If Equipped*

This feature allows you to choose to show the time in the Status bar. To change the Time in Status Bar setting, press the "Show Time in Status Bar" button. The button will highlight showing that setting has been selected. Press the back arrow/Done button on the touchscreen to return to the previous menu.

- *Time and Format*

This feature will allow you to set the time and choose the format to display the time. Press the 12h/24h AM and/or PM button on the touchscreen. The button will highlight showing that setting has been selected. Press the back arrow/Done button on the touchscreen to return to the previous menu. If 24h is selected, the AM/PM buttons on the touchscreen will be greyed out (unavailable).

- *Set Date*

This feature will allow you to set the date manually. Press the Set Date button on the touchscreen and using the "Up" and "Down" arrows, set the date. Press the back arrow/Done button on the touchscreen to return to the previous menu.

Safety/Assistance

After pressing the Safety/Assistance button on the touchscreen the following settings will be available:

- *ParkView® Rear Back Up Camera — If Equipped*

Your vehicle may be equipped with the ParkView® Rear Back Up Camera Static Guidelines that allows you to see straight grid line overlay over the ParkView® Back up camera display whenever the shift lever is put into REVERSE and/or the rear hatch is opened. The image will be displayed on the radio touchscreen display along with a caution note to "check entire surroundings" across the top of the screen. When the vehicle is shifted out of REVERSE and the rear hatch is closed the rear view image will display for no more than ten seconds and after the radio screen will appear.

To make your selection, press the ParkView® Rear Back Up Camera button on the touchscreen, until a check-mark appears next to setting, indicating that the setting had been selected. Press the arrow back/Done button on the touchscreen to return to the previous menu.

- *ParkView® Backup Camera Delay*

When this feature is enabled, it will allow the ParkView® Backup Camera display to remain on while in drive for up to 10 seconds, or 8 mph (13 km/h).

Lights

After pressing the Lights button on the touchscreen the following settings will be available:

- *Daytime Running Lights — If Equipped*

When this feature is selected, the headlights will turn on whenever the engine is running. To make your selection, press the Daytime Running Lights button on the touch-screen, until a check-mark appears next to setting, indicating that the setting has been selected. Press the arrow back/Done button on the touchscreen to return to the previous menu.

Doors & Locks

After pressing the "Doors & Locks" button on the touchscreen the following settings will be available:

- *Auto Door Locks*

When this feature is selected, all doors will lock automatically when the vehicle reaches a speed of 12 mph (20 km/h). To make your selection, press the "Auto Lock" button on the touchscreen, then choose "Yes" or "No." The button will highlight indicating that the setting has been selected. Press the back arrow/Done button on the touchscreen to return to the previous menu.

Audio

After pressing the Audio button on the touchscreen the following settings will be available:

- *Balance*

This feature allows you to adjust the Balance settings. Press and drag the speaker icon, use the arrows to adjust, or tap the speaker icon to readjust to the center.

- *Equalizer*

This feature allows you to adjust the Bass, Mid and Treble settings. Adjust the settings with the "–" or "+" arrow buttons on the touchscreen or by selecting any point on the scale between the Up and Down arrow buttons on the touchscreen. Then press the back arrow/Done button on the touchscreen.

NOTE: Bass/Mid/Treble allow you to simply slide your finger up or down to change the setting as well as press directly on the desired setting.

- *Speed Adjusted Volume*

This feature increases or decreases volume relative to vehicle speed. To change the Speed Adjusted Volume press the Off, 1, 2 or 3 button on the touchscreen. Then press the back arrow/Done button on the touchscreen.

- *Loudness — If Equipped*

Loudness improves sound quality at lower volumes. To make your selection, press the "Loudness" button on the touchscreen, then choose "On" or "Off." The button will highlight indicating that the setting has been selected. Press the back arrow/Done button on the touchscreen when done.

- *Auto - On Radio*

Press the Auto On Radio button on the touchscreen to set how the radio behaves when the Ignition is switched to On. The options are: ON, Off or Recall Last. Press the back arrow/Done button on the touchscreen when done.

- *AUX Volume Offset*

This feature provides the ability to tune the audio level for portable devices connected through the AUX input. To make your selection, press the AUX Volume Match button on the touchscreen, choose a level from –3 to +3 followed by pressing the back arrow/Done button on the touchscreen.

- *Radio Off Delay*

Press the Radio Off Delay to keep the radio On for a preset amount of time after the Ignition is switched Off. Press the back arrow/Done button on the touchscreen when done.

Phone/Bluetooth®

After pressing the "Phone/Bluetooth®" button on the touchscreen the following settings will be available:

- *Paired Phones*

This feature shows which phones are paired to the Phone/Bluetooth® system. For further information, refer to the Uconnect® Supplement Manual.

- *Paired Audio Sources*

This feature shows which audio devices are paired to the Phone/Bluetooth® system. For further information, refer to the Uconnect® Supplement Manual.

SiriusXM Setup — If Equipped

After pressing the "SiriusXM Setup" button on the touchscreen, the following settings will be available:

- *Channel Skip*

SiriusXM can be programmed to designate a group of channels that are the most desirable to listen to or to exclude undesirable channels while scanning. To make your selection, press the "Channel Skip" button on the touchscreen, select the channels you would like to skip followed by pressing the back arrow button on the touchscreen.

- *Subscription Information*

New vehicle purchasers or lessees will receive a free limited time subscription to SiriusXM Satellite Radio with your radio. Following the expiration of the free services, it will be necessary to access the information on the Subscription Information screen to re-subscribe.

Press the "Subscription Info" button on the touchscreen to access the Subscription Information screen.

Write down the SIRIUS ID numbers for your receiver. To reactivate your service, either call the number listed on the screen or visit the provider online.

NOTE: SiriusXM Travel Link is a separate subscription and is available for U.S. residents only.

Restore Settings — If Equipped

After pressing the Restore Settings button on the touchscreen the following settings will be available:

- *Restore Settings*

When this feature is selected it will reset the Display, Clock, Audio, and Radio Settings to their default settings. To restore the settings to their default setting, press the Restore Settings button. A pop-up will appear asking "Are you sure you want to reset your settings to default?" select Yes to restore, or Cancel to exit. Once the settings are restored, a pop up appears stating "settings reset to default." Press the okay button on the touchscreen to exit.

Uconnect® RADIOS

For detailed information about your Uconnect® radio, refer to your Uconnect® Supplement Manual.

iPod®/USB/MP3 CONTROL — IF EQUIPPED

The USB Port and Auxiliary Jack is located on the instrument panel left of the radio (driver's lower right). This feature allows an iPod® or external USB device to be plugged into the USB port.

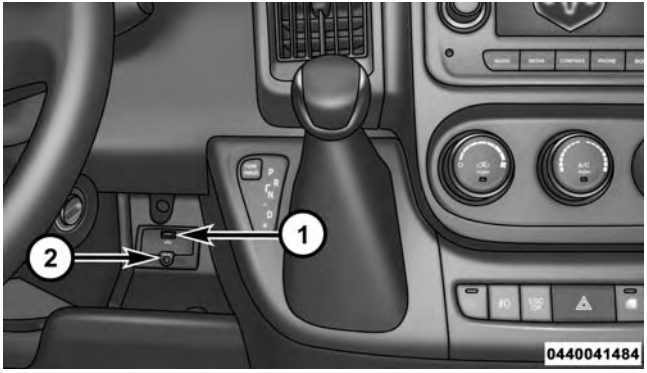

USB Port And AUX Jack

1 — USB Port 2 — AUX Audio Jack

iPod® control supports Mini, 4G, Photo, Nano, 5G iPod® and iPhone® devices. Some iPod® software versions may not fully support the iPod® control features. Please visit Apple's website for software updates.

For further information, refer to the Uconnect® Supplement Manual.

USB Charging Port

The USB connector port can be used for charging purposes only. Use the connection cable to connect an iPod® or external USB device to the vehicle's USB charging port which is located next to the 12V power outlet near the cup holder on passenger side.

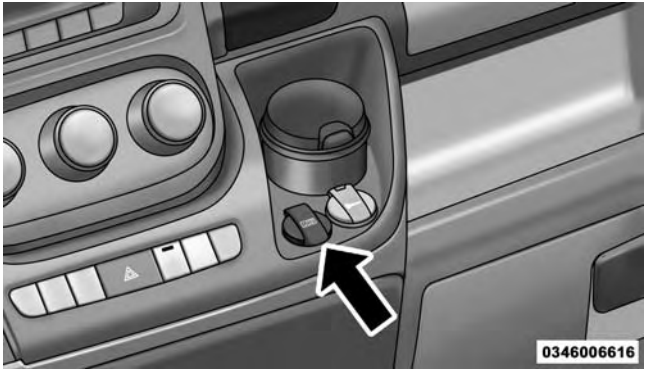

Passenger Compartment USB Charging Port

NOTE: If the device battery to be charged is completely depleted, it may take awhile to charge.

WARNING!

Do not plug in or remove the iPod® or external device while driving. Failure to follow this warning could result in a collision.

STEERING WHEEL AUDIO CONTROLS

The remote sound system controls are located on the surface of the steering wheel.

Remote Sound System Controls

The right-hand control is a rocker-type switch and controls the SCAN functions of the sound system.

The left-hand control is a rocker-type switch and controls the volume of the sound system plus a button to mute the Sound System.

The following describes the right-hand control operation in each mode.

Radio Operation

Pushing the top of the switch will “Scan” up for the next listenable station and pushing the bottom of the switch will “Scan” down for the next listenable station.

CD DISC MAINTENANCE

To keep a CD in good condition, take the following precautions:

1. Handle the disc by its edge; avoid touching the surface.
2. If the disc is stained, clean the surface with a soft cloth, wiping from center to edge.
3. Do not apply paper or tape to the disc; avoid scratching the disc.
4. Do not use solvents such as benzene, thinner, cleaners, or anti-static sprays.
5. Store the disc in its case after playing.
6. Do not expose the disc to direct sunlight.
7. Do not store the disc where temperatures may become too high.

NOTE: If you experience difficulty in playing a particular disc, it may be damaged (e.g, scratched, reflective coating removed, a hair, moisture or dew on the disc) oversized, or have protection encoding. Try a known good disc before considering disc player service.

RADIO OPERATION AND MOBILE PHONES

Under certain conditions, the mobile phone being on in your vehicle can cause erratic or noisy performance from your radio. This condition may be lessened or eliminated by relocating the mobile phone. This condition is not

harmful to the radio. If your radio performance does not satisfactorily "clear" by the repositioning of the phone, it is recommended that the radio volume be turned down or off during mobile phone operation when not using Uconnect® (if equipped).

General Information

This device complies with Part 15 of the FCC rules and RSS 210 of Industry Canada. Operation is subject to the following conditions:

- Changes or modifications not expressly approved by the party responsible for compliance could void the user's authority to operate the equipment.
- This device may not cause harmful interference.
- This device must accept any interference received, including interference that may cause undesired operation.

CLIMATE CONTROLS

Manual Heating And Air Conditioning

0456006285

Manual Temperature Controls

The Manual Temperature Controls consist of a series of three outer rotary dials (blower speed, temperature and mode) and three inner push buttons (Recirculation, A/C, Rear Window Defroster).

Blower Control

Rotate this control to regulate the amount of air forced through the ventilation system in any mode. The blower speed increases as you move the control to the right from the "O" (OFF) position. There are seven blower speeds.

Temperature Control

Rotate this control to regulate the temperature of the air inside the passenger compartment. Rotating the dial left into the blue area of the scale indicates cooler temperatures, while rotating right into the red area indicates warmer temperatures.

NOTE: If your air conditioning performance seems lower than expected, check the front of the A/C condenser located in front of the radiator for an accumulation of dirt or insects. Clean with a gentle water spray from behind the radiator and through the condenser. Fabric front fascia protectors may reduce airflow to the condenser, reducing air conditioning performance.

Air Conditioning Control

Push this button to engage the Air Conditioning. A light will illuminate when the Air Conditioning system is engaged. Rotating the dial left into the blue area of the scale indicates cooler temperatures, while rotating right into the red area indicates warmer temperatures.

- *Economy Mode*

If economy mode is desired, push the A/C button to turn OFF the indicator light and the A/C compressor. Then, select Panel, Bi-Level or Floor mode and move the temperature control to the desired temperature.

Mode Control (Air Direction)

Rotate this control to choose from several patterns of air distribution. You can select either a primary mode as identified by the symbols on the control, or a blend of two of these modes. The closer the setting is to a particular symbol, the more air distribution you receive from that mode.

- *Panel*

Air is directed through the outlets in the instrument panel. These outlets can be adjusted to direct airflow.

NOTE: The center instrument panel outlets can be aimed so that they are directed toward the rear seat passengers for maximum airflow to the rear.

- *Bi-Level*

Air is directed through the panel and floor outlets.

NOTE: For all settings, except full cold or full hot, there is a difference in temperature between the upper and lower outlets. The warmer air flows to the floor outlets. This feature gives improved comfort during sunny but cool conditions.

- *Floor*

Air is directed through the floor outlets with a small amount flowing through the defrost and side window demist outlets.

- *Mix*

Air is directed through the floor, defrost, and side window demist outlets. This setting works best in cold or snowy conditions that require extra heat to the windshield. This setting is good for maintaining comfort while reducing moisture on the windshield.

- *Defrost*

Air is directed through the windshield and side window demist outlets. Use this mode with maximum blower and temperature settings for best windshield and side window defrosting.

NOTE: The air conditioning compressor operates in Mix, Defrost, or a blend of these modes, even if the Air Conditioning (A/C) button is not pushed. This dehumidifies the air to help dry the windshield. To improve fuel economy, use these modes only when necessary.

Recirculation Control

Pushing the Recirculation Control button will put the system in recirculation mode. This can be used when outside conditions such as smoke, odors, dust, or high humidity are present. Activating recirculation will cause the LED in the control button to illuminate.

Continuous use of the Recirculation mode may make the inside air stuffy and window fogging may occur. Extended use of this mode is not recommended.

The use of the Recirculation mode in cold or damp weather will cause windows to fog on the inside, because of moisture buildup inside the vehicle. Select the outside air position for maximum defogging.

Recirculated air is not allowed in Defrost modes. If the Recirculation button is pushed while in Defrost mode, the LED indicator will flash several times then go out. Recirculation will be disabled automatically when Defrost mode is selected.

If the following conditions are verified:

- Mode Floor, Vent or Bi level selected.
- Temperature in Max Cold.
- A/C led ON.
- Hot Ambient Temperature.
- Blower at Maximum speed.
- In case of hot ambient temperature, the recirculation is closed (opened for a minute each 15 minutes so the air can be changed) to improve the vehicle cooling.

Rear Window Defrosting

Push the Rear Defrost button to activate heated rear window defrosting.

This function switches OFF automatically after about 20 minutes or when the engine is turned OFF. It is not switched on automatically the next time the engine is started.

If equipped, push the Rear Defrost button to activate defrosting of door mirrors and heated nozzles.

NOTE: Do not affix stickers to the inside of the heated rear window over the heating filaments, to avoid damage that might cause them to stop working properly.

Additional Rear Climate Control — If Equipped

This switch, mounted on the instrument panel to the left of the steering column, activates the additional rear heating/air conditioning system vent.

NOTE: The switch must be enabled for operation by the Upfitter.

Additional Rear Climate Control Switch

Uconnect® 5.0 VOICE RECOGNITION QUICK TIPS

Introducing Uconnect®

Start using Uconnect® Voice Recognition with these helpful quick tips. It provides the key Voice Commands and tips you need to know to control your Uconnect® 5.0 system.

Key Features:

- 5.0″ Full Color Touchscreen Display
- Bluetooth® With Integrated Voice Control
- GPS Navigation (If Equipped)

Uconnect® 5.0

Get Started

1. Visit UconnectPhone.com to check mobile device and feature compatibility and to find phone pairing instructions.

2. Reduce background noise. Wind and passenger conversations are examples of noise that may impact recognition.
3. Speak clearly at a normal pace and volume while facing straight ahead. The microphone is positioned on the rearview mirror and aimed at the driver.
4. Each time you give a Voice Command, you must first push either the VR or PHONE button, wait until **after** the beep, then say your Voice Command.
5. You can interrupt the help message or system prompts by pushing the VR or PHONE button and saying a Voice Command from current category.

All you need to control your Uconnect® system with your voice are the buttons on your steering wheel.

VR And Phone Buttons

1 — Push To MUTE
2 — Push To Initiate Or To Answer A Phone Call, Send Or Receive A Text
3 — Push To Begin Radio, Media, Navigation, Apps And Climate Functions
4 — Push To End Call

Basic Voice Commands

The basic Voice Commands below can be given at any point while using your Uconnect® system.

Push the VR button . After the beep, say...

- **Cancel** to stop a current voice session
- **Help** to hear a list of suggested Voice Commands
- **Repeat** to listen to the system prompts again

Notice the visual cues that inform you of your voice recognition system's status. Cues appear on the touch-screen.

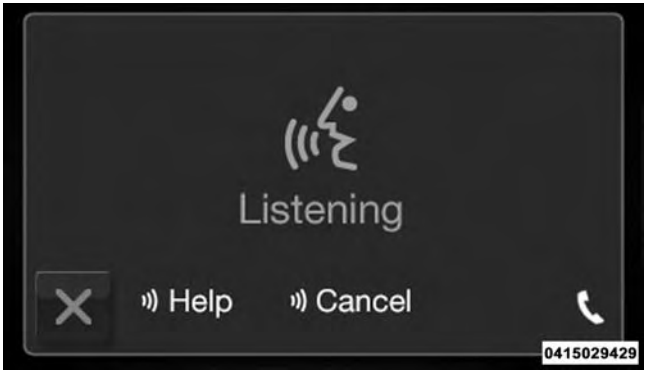

Uconnect® 5.0

Radio

Use your voice to quickly get to the AM, FM or SiriusXM Satellite Radio® stations you would like to hear. (Subscription or included SiriusXM Satellite Radio trial required.)

Push the VR button . After the beep, say...

- **Tune to** ninety-five-point-five FM
- **Tune to** Satellite Channel Hits 1

TIP: At any time, if you are not sure of what to say or want to learn a Voice Command, push the VR button and say **"Help."** The system will provide you with a list of commands.

Uconnect® 5.0 Radio

Media

Uconnect® offers connections via USB, SD, Bluetooth® and Auxiliary ports (If Equipped). Voice operation is only available for connected USB and iPod® devices. (Remote CD player optional and not available on all vehicles.)

Push the VR button . After the beep, say one of the following commands and follow the prompts to switch your media source or choose an artist.

- **Change source** to Bluetooth®
- **Change source** to iPod®
- **Change source** to USB
- **Play artist** Beethoven; **Play album** Greatest Hits; **Play song** Moonlight Sonata; **Play genre** Classical

TIP: Press the "Browse" button on the touchscreen to see all of the music on your iPod® or USB device. Your Voice Command must match **exactly** how the artist, album, song and genre information is displayed.

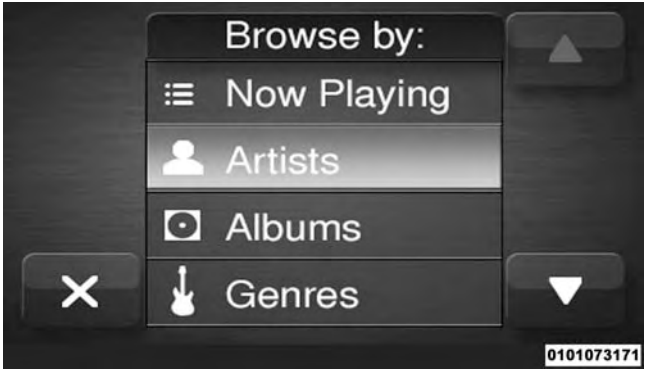

Uconnect® 5.0 Media

Voice Text Reply

Uconnect® will announce **incoming** text messages. Push the PHONE button and say **Listen.** (Must have compatible mobile phone paired to Uconnect® system.)

1. Once an incoming text message is read to you, push the PHONE button . After the beep, say... **"Reply."**
2. Listen to the Uconnect® prompts. After the beep, repeat one of the pre-defined messages and follow the system prompts.

PRE-DEFINED VOICE TEXT REPLY RESPONSES

Yes.	Stuck in traffic.	See you later.
No.	Start without me.	I'll be late.
Okay.	Where are you?	I will be <number> minutes late.
Call me.	Are you there yet?	
I'll call you later.	I need directions.	See you in <number> of minutes.
I'm on my way.	Can't talk right now.	
I'm lost.		Thanks.

TIP: Your mobile phone must have the full implementation of the **Message Access Profile (MAP)** to take advantage of this feature. For details about MAP, visit UconnectPhone.com. Apple iPhone® iOS6 or later supports reading **incoming** text messages only.

Additional Information

© 2015 FCA US LLC. All rights reserved. Mopar and Uconnect are registered trademarks and Mopar Owner Connect is a trademark of FCA US LLC. Android is a trademark of Google Inc. SiriusXM and all related marks and logos are trademarks of SiriusXM Radio Inc. Yelp, Yelp logo, Yelp burst and related marks are registered trademarks of Yelp.

Uconnect® System Support:

- DriveUconnect.com
- U.S. residents call 1-877-855-8400
- Canadian residents call 1-800-465-2001 (English) or 1-800-387-9983 (French)

Mon. – Fri., 7:00 am – 12:00 am, ET

Sat., 8:00 am – 10:00 pm, ET

Sun., 9:00 am – 5:00 pm, ET

STARTING AND OPERATING

CONTENTS

■ STARTING PROCEDURES 200
- □ Automatic Transmission — If Equipped 200
- □ Normal Starting. 200
- □ Extreme Cold Weather (Below –20°F Or –29°C) 201
- □ If Engine Fails To Start 201
- □ After Starting 201

■ ENGINE BLOCK HEATER — IF EQUIPPED . . .202

■ AUTOMATIC TRANSMISSION 202
- □ Key Ignition Park Interlock. 203
- □ Brake/Transmission Shift Interlock System . . .204
- □ Six-Speed Automatic Transmission 204

■ DRIVING ON SLIPPERY SURFACES 214
- □ Acceleration 214
- □ Traction 214

■ DRIVING THROUGH WATER 215
- □ Flowing/Rising Water 215
- □ Shallow Standing Water 215

■ POWER STEERING 217
- □ Power Steering Fluid Check 218

■ PARKING BRAKE 218
■ BRAKE SYSTEM 220
■ ELECTRONIC BRAKE CONTROL SYSTEM 221
□ Four-Wheel Anti-Lock Brake System (ABS) . . .221
□ Traction Control System (TCS) 222
□ Brake Assist System (BAS) 223
□ Electronic Stability Control (ESC) 224
□ Trailer Sway Control (TSC) 227
□ Hill Start Assist (HSA) 228
■ TIRE SAFETY INFORMATION 230
□ Tire Markings 230
□ Tire Identification Number (TIN). 234
□ Tire Terminology And Definitions 236
□ Tire Loading And Tire Pressure 237
■ TIRES — GENERAL INFORMATION 242
□ Tire Pressure 242
□ Tire Inflation Pressures 243
□ Tire Pressures For High Speed Operation 245
□ Radial Ply Tires 245
□ Tire Types. 246
□ Run Flat Tires — If Equipped 248
□ Spare Tires — If Equipped 248
□ Tire Spinning 250
□ Tread Wear Indicators 251
□ Life Of Tire 252
□ Replacement Tires 253

■ TIRE CHAINS (TRACTION DEVICES) 254
■ TIRE ROTATION RECOMMENDATIONS 256
■ TIRE PRESSURE MONITORING SYSTEM (TPMS) 257
□ Base System 259
□ General Information 261
■ FUEL REQUIREMENTS 262
□ 3.6L Engine 262
□ Reformulated Gasoline 262
□ Gasoline/Oxygenate Blends 263
□ E-85 Usage In Non-Flex Fuel Vehicles 263
□ MMT In Gasoline 264
□ Materials Added To Fuel 264
□ Fuel System Cautions 265
□ Carbon Monoxide Warnings 266
■ ADDING FUEL 266
□ Fuel Filler Cap (Gas Cap) 266
□ Loose Fuel Filler Cap Message 268
■ VEHICLE LOADING 269
□ Vehicle Certification Label 269
■ TRAILER TOWING 271
□ Common Towing Definitions 272
□ Towing Tips 282
■ RECREATIONAL TOWING (BEHIND MOTORHOME, ETC.) 283
□ Towing This Vehicle Behind Another Vehicle . .283
□ Recreational Towing — Automatic Transmission 284

STARTING PROCEDURES

Before starting your vehicle, adjust your seat, adjust both inside and outside mirrors, and fasten your seat belts.

WARNING!

- **Never leave children alone in a vehicle, or with access to an unlocked vehicle.**
- **Allowing children to be in a vehicle unattended is dangerous for a number of reasons. A child or others could be seriously or fatally injured. Children should be warned not to touch the parking brake, brake pedal or the transmission gear selector.**
- **Do not leave the Key Fob in or near the vehicle (or in a location accessible to children). A child could operate power windows, other controls, or move the vehicle.**

Automatic Transmission — If Equipped

The shift lever must be in the PARK or NEUTRAL position before you can start the engine. Press the brake pedal before shifting to any driving gear.

NOTE: You must press the brake pedal before shifting out of PARK.

Normal Starting

NOTE: Normal starting of either a cold or a warm engine is obtained without pumping or pressing the accelerator pedal.

Turn the ignition switch to the AVV/ACC (START) position and release it when the engine starts. If the engine fails to start within 10 seconds, turn the ignition switch to the STOP (OFF/LOCK) position, wait 10 to 15 seconds, then repeat the “Normal Starting” procedure.

Extreme Cold Weather (Below –20°F Or –29°C)

To ensure reliable starting at these temperatures, use of an externally powered electric engine block heater (available from your authorized dealer) is recommended.

If Engine Fails To Start

WARNING!

Never pour fuel or other flammable liquids into the throttle body air inlet opening in an attempt to start the vehicle. This could result in a flash fire causing serious personal injury.

CAUTION!

- **Do not attempt to push or tow your vehicle to get it started. Vehicles equipped with an automatic transmission cannot be started this way. Unburned fuel could enter the catalytic converter and once the engine has started, ignite and damage the converter and vehicle.**
- **To prevent damage to the starter, do not continuously crank the engine for more than 15 seconds at a time. Wait 10 to 15 seconds before trying again.**

After Starting

The idle speed is controlled automatically and it will decrease as the engine warms up.

ENGINE BLOCK HEATER — IF EQUIPPED

The engine block heater warms the engine, and permits quicker starts in cold weather. Connect the cord to a standard 110-115 Volt AC electrical outlet with a grounded, three-wire extension cord.

The engine block heater must be plugged in at least one hour to have an adequate warming effect on the engine.

WARNING!

Remember to disconnect the engine block heater cord before driving. Damage to the 110-115 Volt electrical cord could cause electrocution.

AUTOMATIC TRANSMISSION

WARNING!

- **It is dangerous to shift out of PARK or NEUTRAL if the engine speed is higher than idle speed. If your foot is not firmly pressing the brake pedal, the vehicle could accelerate quickly forward or in reverse. You could lose control of the vehicle and hit someone or something. Only shift into gear when the engine is idling normally and your foot is firmly pressing the brake pedal.**
- **Unintended movement of a vehicle could injure those in or near the vehicle. As with all vehicles, you should never exit a vehicle while the engine is running. Before exiting a vehicle, always apply the parking brake, shift the transmission into PARK, turn the engine OFF, and remove the ignition key.**

(Continued)

WARNING! *(Continued)*

Once the key is removed, the transmission is locked in PARK, securing the vehicle against unwanted movement.

- **When leaving the vehicle, always remove the ignition key from the vehicle and lock the vehicle.**
- **Never leave children alone in a vehicle, or with access to an unlocked vehicle. Allowing children to be in a vehicle unattended is dangerous for a number of reasons. A child or others could be seriously or fatally injured. Children should be warned not to touch the parking brake, brake pedal or the transmission gear selector.**
- **Do not leave the ignition key in or near the vehicle (or in a location accessible to children). A child could operate power windows, other controls, or move the vehicle.**

CAUTION!

Damage to the transmission may occur if the following precautions are not observed:

- **Shift into or out of PARK or REVERSE only after the vehicle has come to a complete stop.**
- **Do not shift between PARK, REVERSE, NEUTRAL, or DRIVE when the engine is above idle speed.**
- **Before shifting into any gear, make sure your foot is firmly pressing the brake pedal.**

NOTE: You must press and hold the brake pedal while shifting out of PARK.

Key Ignition Park Interlock

This vehicle is equipped with a Key Ignition Park Interlock which requires the transmission to be in PARK before the ignition switch can be turned to the LOCK/

OFF (key removal) position. The key can only be removed from the ignition when the ignition is in the LOCK/OFF position, and once removed the transmission is locked in PARK.

NOTE: If a malfunction occurs, the system will trap the key in the ignition switch to warn you that this safety feature is inoperable. The engine can be started and stopped but the key cannot be removed until you obtain service.

Brake/Transmission Shift Interlock System

This vehicle is equipped with a Brake Transmission Shift Interlock System (BTSI) that holds the shift lever in PARK unless the brakes are applied. To shift the transmission out of PARK, the ignition switch must be turned to the ON/RUN position (engine running or not), and the brake pedal must be pressed.

NOTE: Swivel seats that are unlocked can also prevent the transmission shift lever from being moved out of the PARK position. To shift the transmission out of the PARK position the first time after the cranking is allowed, ensure swivel seats are locked in forward facing position.

Six-Speed Automatic Transmission

The transmission gear position display (located in the instrument cluster) indicates the transmission gear range. You must press the brake pedal to move the shift lever out of PARK (Refer to “Brake/Transmission Shift Interlock System” in this section). To drive, move the shift lever from PARK or NEUTRAL to the DRIVE position.

The electronically-controlled transmission provides a precise shift schedule. The transmission electronics are self-calibrating; therefore, the first few shifts on a new vehicle may be somewhat abrupt. This is a normal condition, and precision shifts will develop within a few hundred miles (kilometers).

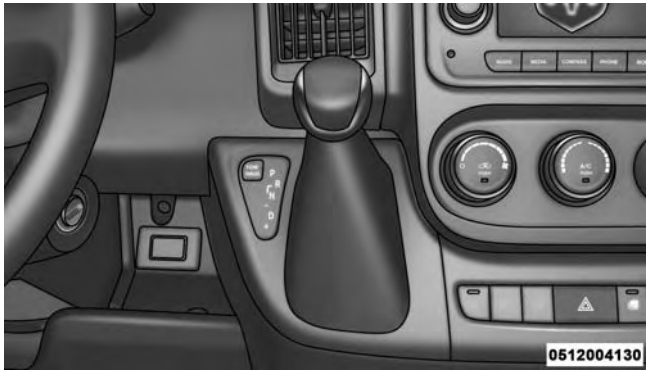

Shift Lever

Only shift from DRIVE to PARK or REVERSE when the accelerator pedal is released and the vehicle is stopped. Be sure to keep your foot on the brake pedal when shifting between these gears.

The transmission shift lever has PARK, REVERSE, NEUTRAL, DRIVE, and Electronic Range Select (ERS) shift positions. Manual downshifts can be made using the ERS shift control (refer to "Electronic Range Select (ERS) Operation" in this section for further information). Moving the shift lever into the ERS (-/+) position (beside the DRIVE position) displays the current gear in the instrument cluster, and prevents automatic upshifts beyond this gear. In ERS mode, toggling the shift lever forward (-) or rearward (+) will change the highest available gear.

NOTE: If the shift lever cannot be moved to the PARK, REVERSE, or NEUTRAL position (when pushed forward) it is probably in the ERS (+/-) position (beside the DRIVE position). In ERS mode, the transmission gear limit (1, 2, 3, etc.) is displayed in the instrument cluster. Move the shift lever to the right (into the DRIVE [D] position) for access to PARK, REVERSE, and NEUTRAL.

Gear Ranges

DO NOT race the engine when shifting from PARK or NEUTRAL into another gear range.

NOTE: After selecting any gear range, wait a moment to allow the selected gear to engage before accelerating. This is especially important when the engine is cold.

PARK (P)

This range supplements the parking brake by locking the transmission. The engine can be started in this range. Never attempt to use PARK while the vehicle is in motion. Apply the parking brake when leaving the vehicle in this range.

When parking on a level surface, you may shift the transmission into PARK first, and then apply the parking brake.

When parking on a hill, apply the parking brake before shifting the transmission to PARK, otherwise the load on the transmission locking mechanism may make it difficult to move the shift lever out of PARK. As an added precaution, turn the front wheels toward the curb on a downhill grade, and away from the curb on an uphill grade.

WARNING!

- **Never use the PARK position as a substitute for the parking brake. Always apply the parking brake fully when parked to guard against vehicle movement and possible injury or damage.**
- **Your vehicle could move and injure you and others if it is not in PARK. Check by trying to move the gear selector/shift lever out of PARK with the brake pedal released. Make sure the transmission is in PARK before leaving the vehicle.**
- **It is dangerous to shift out of PARK or NEUTRAL if the engine speed is higher than idle speed. If your foot is not firmly pressing the brake pedal, the**

(Continued)

WARNING! *(Continued)*

vehicle could accelerate quickly forward or in reverse. You could lose control of the vehicle and hit someone or something. Only shift into gear when the engine is idling normally and your foot is firmly pressing the brake pedal.

- Unintended movement of a vehicle could injure those in or near the vehicle. As with all vehicles, you should never exit a vehicle while the engine is running. Before exiting a vehicle, always apply the parking brake, shift the transmission into PARK, turn the engine OFF, and remove the ignition key. Once the key is removed, the transmission is locked in PARK, securing the vehicle against unwanted movement.
- When leaving the vehicle, always remove the ignition key from the vehicle and lock the vehicle.

(Continued)

WARNING! *(Continued)*

- Never leave children alone in a vehicle, or with access to an unlocked vehicle. Allowing children to be in a vehicle unattended is dangerous for a number of reasons. A child or others could be seriously or fatally injured. Children should be warned not to touch the parking brake, brake pedal or the gear selector.
- Do not leave the ignition key in or near the vehicle (or in a location accessible to children). A child could operate power windows, other controls, or move the vehicle.

The following indicators should be used to ensure that you have engaged the transmission into the PARK position:

- When shifting into PARK, firmly move the shift lever all the way forward and to the left until it stops and is fully seated.
- Look at the transmission gear position display and verify that it indicates the PARK position (P).
- With the brake pedal released, verify the shift lever will not move out of PARK.

CAUTION!

- **Before moving the shift lever out of PARK, you must turn the ignition switch from the LOCK/OFF position to the ON/RUN position, and also press the brake pedal. Otherwise, damage to the shift lever could result.**

(Continued)

CAUTION! *(Continued)*

- **DO NOT race the engine when shifting from PARK or NEUTRAL into another gear range, as this can damage the drivetrain.**

REVERSE (R)

This range is for moving the vehicle backward. Shift into REVERSE only after the vehicle has come to a complete stop.

NEUTRAL (N)

Use this range when the vehicle is standing for prolonged periods with the engine running. The engine may be started in this range. Apply the parking brake and shift the transmission into PARK if you must leave the vehicle.

WARNING!

Do not coast in NEUTRAL and never turn off the ignition to coast down a hill. These are unsafe practices that limit your response to changing traffic or road conditions. You might lose control of the vehicle and have a collision.

CAUTION!

Towing the vehicle, coasting, or driving for any other reason with the transmission in NEUTRAL can cause severe transmission damage. Refer to "Recreational Towing" in "Starting And Operating" and "Towing A Disabled Vehicle" in "What To Do In Emergencies" for further information.

DRIVE (D)

This range should be used for most city and highway driving. It provides the smoothest upshifts and downshifts, and the best fuel economy. The transmission automatically upshifts through all forward gears. The DRIVE position provides optimum driving characteristics under all normal operating conditions.

When frequent transmission shifting occurs (such as when operating the vehicle under heavy loading conditions, in hilly terrain, traveling into strong head winds, or while towing heavy trailers), select Tow/Haul mode or use the Electronic Range Select (ERS) shift control (refer to "Electronic Range Select (ERS) Operation" in this section for further information) to select a lower gear range. Under these conditions, using a lower gear range will improve performance and extend transmission life by reducing excessive shifting and heat buildup.

During cold temperatures, transmission operation may be modified depending on engine and transmission temperature as well as vehicle speed. This feature improves warm up time of the engine and transmission to achieve maximum efficiency. Engagement of the torque converter clutch is inhibited until the transmission fluid is warm (refer to the "Note" under "Torque Converter Clutch" in this section). During extremely cold temperatures (-16°F [-27°C] or below), operation may briefly be limited to third gear only. Normal operation will resume once the transmission temperature has risen to a suitable level.

Transmission Limp Home Mode

Transmission function is monitored electronically for abnormal conditions. If a condition is detected that could result in transmission damage, Transmission Limp Home Mode is activated. In this mode, the transmission remains in third gear regardless of which forward gear is selected. PARK, REVERSE, and NEUTRAL will continue to operate. The Malfunction Indicator Light (MIL) may be illuminated. Limp Home Mode allows the vehicle to be driven to an authorized dealer for service without damaging the transmission.

In the event of a momentary problem, the transmission can be reset to regain all forward gears by performing the following steps:

1. Stop the vehicle.
2. Shift the transmission into PARK.
3. Turn the ignition switch to the OFF position.
4. Wait approximately 10 seconds.
5. Restart the engine.
6. Shift into the desired gear range. If the problem is no longer detected, the transmission will return to normal operation.

NOTE: Even if the transmission can be reset, we recommend that you visit your authorized dealer at your earliest possible convenience. Your authorized dealer has diagnostic equipment to determine if the problem could recur.

If the transmission cannot be reset, authorized dealer service is required.

Electronic Range Select (ERS) Operation

The Electronic Range Select (ERS) shift control allows the driver to limit the highest available gear. For example, if you set the transmission gear limit to 4 (fourth gear), the transmission will not shift above fourth gear, but will shift through the lower gears normally.

You can switch between DRIVE and ERS mode at any vehicle speed. When the shift lever is in the DRIVE position, the transmission will operate automatically, shifting between all available gears. Moving the shift lever to the ERS position (beside DRIVE) will activate ERS mode, display the current gear in the instrument cluster, and set that gear as the top available gear. Once in ERS mode, moving the shift lever forward (-) or rearward (+) will change the top available gear.

To exit ERS mode, simply return the shift lever to the DRIVE position.

WARNING!

Do not downshift for additional engine braking on a slippery surface. The drive wheels could lose their grip and the vehicle could skid, causing a collision or personal injury.

Instrument Cluster Display	1	2	3	4	5	6	D
Actual Gear(s) Allowed	1	1–2	1–3	1–4	1–5	1–6	1–6

NOTE: To select the proper gear position for maximum deceleration (engine braking), move the shift lever into the ERS position, then tap it forward (-) repeatedly as the vehicle slows. The transmission will shift to the range from which the vehicle can best be slowed down.

Overdrive Operation

The automatic transmission includes an electronically controlled Overdrive (sixth gear). The transmission will automatically shift into Overdrive if the following conditions are present:

- The shift lever is in the DRIVE position.
- The transmission fluid has reached an adequate temperature.
- The engine coolant has reached an adequate temperature.
- The vehicle speed is sufficiently high.
- The driver is not heavily pressing the accelerator.

When To Use TOW/HAUL Mode

When driving in hilly areas, towing a trailer, carrying a heavy load, etc., and frequent transmission shifting occurs, push the TOW/HAUL switch to activate TOW/HAUL mode. This will improve performance and reduce the potential for transmission overheating or failure due to excessive shifting. When operating in TOW/HAUL mode, transmission upshifts are delayed, and the transmission will automatically downshift (for engine braking) during steady braking maneuvers.

The "TOW/HAUL Indicator Light" will illuminate in the instrument cluster to indicate that TOW/HAUL mode has been activated. Pushing the switch a second time restores normal operation. Normal operation is always the default at engine start-up. If TOW/HAUL mode is desired, the switch must be pushed each time the engine is started.

Torque Converter Clutch

A feature designed to improve fuel economy has been included in the automatic transmission on your vehicle. A clutch within the torque converter engages automatically at calibrated speeds. This may result in a slightly different feeling or response during normal operation in the upper gears. When the vehicle speed drops or during some accelerations, the clutch automatically disengages.

NOTE:

- The torque converter clutch will not engage, until the transmission fluid and engine coolant are warm [usually after 1 to 3 miles (2 to 5 km) of driving]. Because the engine speed is higher when the torque converter clutch is not engaged, it may seem as if the transmission is not shifting into Overdrive when cold. This is normal. Using the Electronic Range Select (ERS) shift control, when the transmission is sufficiently warm, will demonstrate that the transmission is able to shift into and out of Overdrive.

- If the vehicle has not been driven for several days, the first few seconds of operation after shifting the transmission into gear may seem sluggish. This is due to the fluid partially draining from the torque converter into the transmission. This condition is normal and will not cause damage to the transmission. The torque converter will refill within five seconds after starting the engine.

DRIVING ON SLIPPERY SURFACES

Acceleration

Rapid acceleration on snow covered, wet, or other slippery surfaces may cause the driving wheels to pull erratically to the right or left. This phenomenon occurs when there is a difference in the surface traction under the front (driving) wheels.

WARNING!

Rapid acceleration on slippery surfaces is dangerous. Unequal traction can cause sudden pulling of the front wheels. You could lose control of the vehicle and possibly have a collision. Accelerate slowly and carefully whenever there is likely to be poor traction (ice, snow, wet, mud, loose sand, etc.).

Traction

When driving on wet or slushy roads, it is possible for a wedge of water to build up between the tire and road surface. This is hydroplaning and may cause partial or complete loss of vehicle control and stopping ability. To reduce this possibility, the following precautions should be observed:

1. Slow down during rainstorms or when the roads are slushy.

2. Slow down if the road has standing water or puddles.
3. Replace the tires when tread wear indicators first become visible.
4. Keep tires properly inflated.
5. Maintain sufficient distance between your vehicle and the vehicle in front of you to avoid a collision in a sudden stop.

DRIVING THROUGH WATER

Driving through water more than a few inches/centimeters deep will require extra caution to ensure safety and prevent damage to your vehicle.

Flowing/Rising Water

WARNING!

Do not drive on or across a road or path where water is flowing and/or rising (as in storm run-off). Flowing water can wear away the road or path's surface and cause your vehicle to sink into deeper water. Furthermore, flowing and/or rising water can carry your vehicle away swiftly. Failure to follow this warning may result in injuries that are serious or fatal to you, your passengers, and others around you.

Shallow Standing Water

Although your vehicle is capable of driving through shallow standing water, consider the following Cautions and Warnings before doing so.

WARNING!

- **Driving through standing water limits your vehicle's traction capabilities. Do not exceed 5 mph (8 km/h) when driving through standing water.**
- **Driving through standing water limits your vehicle's braking capabilities, which increases stopping distances. Therefore, after driving through standing water, drive slowly and lightly press on the brake pedal several times to dry the brakes.**
- **Failure to follow these warnings may result in injuries that are serious or fatal to you, your passengers, and others around you.**

CAUTION!

- **Always check the depth of the standing water before driving through it. Never drive through**

(Continued)

CAUTION! ***(Continued)***

standing water that is deeper than the bottom of the tire rims mounted on the vehicle.
- **Determine the condition of the road or the path that is under water and if there are any obstacles in the way before driving through the standing water.**
- **Do not exceed 5 mph (8 km/h) when driving through standing water. This will minimize wave effects.**
- **Driving through standing water may cause damage to your vehicle's drivetrain components. Always inspect your vehicle's fluids (i.e., engine oil, transmission, axle, etc.) for signs of contamination (i.e., fluid that is milky or foamy in appearance) after driving through standing water. Do not continue to operate the vehicle if any fluid appears contaminated, as this may result in further damage. Such**

(Continued)

CAUTION! *(Continued)*

damage is not covered by the New Vehicle Limited Warranty.

- **Getting water inside your vehicle's engine can cause it to lock up and stall out, and cause serious internal damage to the engine. Such damage is not covered by the New Vehicle Limited Warranty.**

POWER STEERING

The standard power steering system will give you good vehicle response and increased ease of maneuverability in tight spaces. The system will provide mechanical steering capability if power assist is lost.

If for some reason the power assist is interrupted, it will still be possible to steer your vehicle. Under these conditions, you will observe a substantial increase in steering effort, especially at very low vehicle speeds and during parking maneuvers.

NOTE:

- Increased noise levels at the end of the steering wheel travel are considered normal and do not indicate that there is a problem with the power steering system.
- Upon initial start-up in cold weather, the power steering pump may make noise for a short amount of time. This is due to the cold, thick fluid in the steering system. This noise should be considered normal, and it does not in any way damage the steering system.

CAUTION!

Prolonged operation of the steering system at the end of the steering wheel travel will increase the steering fluid temperature and it should be avoided when possible. Damage to the power steering pump may occur.

Power Steering Fluid Check

Checking the power steering fluid level at a defined service interval is not required. The fluid should only be checked if a leak is suspected, abnormal noises are apparent, and/or the system is not functioning as anticipated. Coordinate inspection efforts through an authorized dealer.

CAUTION!

Do not use chemical flushes in your power steering system as the chemicals can damage your power steering components. Such damage is not covered by the New Vehicle Limited Warranty.

WARNING!

Fluid level should be checked on a level surface and with the engine off to prevent injury from moving

(Continued)

WARNING! ***(Continued)***

parts and to ensure accurate fluid level reading. Do not overfill. Use only manufacturer's recommended power steering fluid.

If necessary, add fluid to restore to the proper indicated level. With a clean cloth, wipe any spilled fluid from all surfaces. Refer to "Fluids, Lubricants, And Genuine Parts" in "Maintaining Your Vehicle" for further information.

PARKING BRAKE

Before leaving the vehicle, make sure that the parking brake is fully applied.

The parking brake lever is located on the outboard side of the drivers seat. To apply the parking brake, pull the lever up as firmly as possible. To release the parking

brake, pull the lever up slightly, push the release button with your thumb, then lower the lever completely.

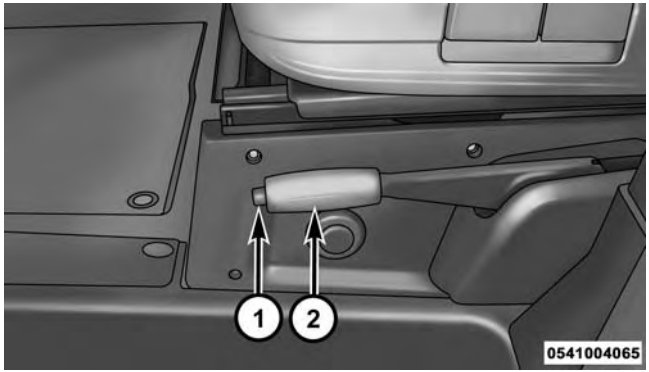

Parking Brake

1 — Parking Brake Release Button
2 — Parking Brake Lever

When the parking brake is applied with the ignition switch in the MAR (ACC/ON/RUN) position, the Brake Warning Light in the instrument cluster will illuminate.

When parking on a hill, it is important to turn the front wheels toward the curb on a downhill grade and away from the curb on an uphill grade. The parking brake should always be applied whenever the driver is not in the vehicle.

WARNING!

- **Never leave children alone in a vehicle, or with access to an unlocked vehicle.**
- **Allowing children to be in a vehicle unattended is dangerous for a number of reasons. A child or others could be seriously or fatally injured. Children should be warned not to touch the parking brake, brake pedal or the gear selector.**

(Continued)

WARNING! ***(Continued)***

- **Do not leave the Key Fob in or near the vehicle or in a location accessible to children. A child could operate power windows, other controls, or move the vehicle.**
- **Be sure the parking brake is fully disengaged before driving; failure to do so can lead to brake failure and a collision.**
- **Always fully apply the parking brake when leaving your vehicle, or it may roll and cause damage or injury. Also be certain to leave a manual transmission in REVERSE or first (1st) gear. Failure to do so may allow the vehicle to roll and cause damage or injury.**

CAUTION!

If the Brake Warning Light remains on with the parking brake released, a brake system malfunction is indicated. Have the brake system serviced by an authorized dealer immediately.

BRAKE SYSTEM

Your vehicle is equipped with dual hydraulic brake systems. If either of the two hydraulic systems loses normal capability, the remaining system will still function. However, there will be some loss of overall braking effectiveness. You may notice increased pedal travel during application, greater pedal force required to slow or stop, and potential activation of the "Brake System Warning Light".

In the event power assist is lost for any reason (i.e., repeated brake applications with the engine off) the

brakes will still function. However, the effort required to brake the vehicle will be much greater than that required with the power system operating.

ELECTRONIC BRAKE CONTROL SYSTEM

Your vehicle is equipped with an advanced electronic brake control system that includes the Traction Control System (TCS), Brake Assist System (BAS) and Electronic Stability Control (ESC), Trailer Sway Control (TSC), and Hill Start Assist (HSA). These systems complement the Anti-Lock Brake System (ABS) by optimizing the vehicle braking capability during emergency braking maneuvers.

Four-Wheel Anti-Lock Brake System (ABS)

The Four-Wheel ABS is designed to aid the driver in maintaining vehicle control under adverse braking conditions. The system operates with a separate computer to modulate hydraulic pressure, to prevent wheel lock-up and to help avoid skidding on slippery surfaces.

The system's pump motor runs during an ABS stop to provide regulated hydraulic pressure. The pump motor makes a low humming noise during operation, which is normal.

The ABS includes an amber ABS Warning Light. When the light is illuminated, the ABS is not functioning. The system reverts to standard non-anti-lock brakes. Turning the ignition Off and On again may reset the ABS if the fault detected was only momentary.

WARNING!

- **Pumping the Anti-Lock Brakes will diminish their effectiveness and may lead to a collision. Pumping makes the stopping distance longer. Just press**

(Continued)

WARNING! ***(Continued)***

firmly on your brake pedal when you need to slow down or stop.

- **The Anti-Lock Brake System (ABS) cannot prevent the natural laws of physics from acting on the vehicle, nor can it increase braking or steering efficiency beyond that afforded by the condition of the vehicle brakes and tires or the traction afforded.**
- **The ABS cannot prevent collisions, including those resulting from excessive speed in turns, following another vehicle too closely, or hydroplaning.**
- **The capabilities of an ABS-equipped vehicle must never be exploited in a reckless or dangerous manner, which could jeopardize the user's safety or the safety of others.**

When you are in a severe braking condition involving the use of the ABS, you will experience some pedal drop as the vehicle comes to a stop. This is the result of the system reverting to the base brake system.

Engagement of the ABS may be accompanied by a pulsing sensation. You may also hear a clicking noise. These occurrences are normal and indicate that the system is functioning properly.

Traction Control System (TCS)

The Traction Control System (TCS) monitors the amount of wheel spin of each of the driven wheels. If wheel spin is detected, brake pressure is applied to the slipping wheel(s) and engine power is reduced, to provide enhanced acceleration and stability. A feature of the TCS system, Brake Limited Differential (BLD), functions similar to a limited slip differential and controls the wheel spin across a driven axle. If one wheel on a driven axle is spinning faster than the other, the system will apply the brake of the spinning wheel. This will allow more engine

torque to be applied to the wheel that is not spinning. This feature remains active even if the ESC is in the "Partial Off" mode.

The "ESC Activation/Malfunction Indicator Light" (in the instrument cluster) will start to flash as soon as the tires lose traction and the wheels begin to spin. This indicates that the TCS is active. If the indicator light flashes during acceleration, ease up on the accelerator and apply as little throttle as possible. Be sure to adapt your speed and driving to the prevailing road conditions, and do not switch off the ESC or TCS.

WARNING!

- **The TCS cannot prevent the natural laws of physics from acting on the vehicle, nor can it increase the traction afforded.**

(Continued)

WARNING! ***(Continued)***

- **The TCS cannot prevent collisions, including those resulting from excessive speed in turns, or hydroplaning.**
- **The capabilities of a TCS-equipped vehicle must never be exploited in a reckless or dangerous manner, which could jeopardize the user's safety or the safety of others.**

Brake Assist System (BAS)

The Brake Assist System (BAS) is designed to optimize the vehicle's braking capability during emergency braking maneuvers. The system detects an emergency braking situation by sensing the rate and amount of brake application, and then applies optimum pressure to the brakes. This can help reduce braking distances. The BAS complements the ABS. Applying the brakes very quickly results in the best BAS assistance. To receive the benefit of the system, you must apply continuous braking pressure

during the stopping sequence. Do not reduce brake pedal pressure unless braking is no longer desired. Once the brake pedal is released, the BAS is deactivated.

WARNING!

- **The BAS cannot prevent the natural laws of physics from acting on the vehicle, nor can it increase the traction afforded by prevailing road conditions.**
- **The BAS cannot prevent collisions, including those resulting from excessive speed in turns, driving on very slippery surfaces, or hydroplaning.**
- **The capabilities of a BAS-equipped vehicle must never be exploited in a reckless or dangerous manner which could jeopardize the user's safety or the safety of others.**

Electronic Stability Control (ESC)

The Electronic Stability Control (ESC) enhances directional control and stability of the vehicle under various driving conditions. ESC corrects for over/under steering of the vehicle by applying the brake of the appropriate wheel to assist in counteracting the over/under steer condition. Engine power may also be reduced to help the vehicle maintain the desired path.

ESC uses sensors in the vehicle to determine the vehicle path intended by the driver and compares it to the actual path of the vehicle. When the actual path does not match the intended path, ESC applies the brake of the appropriate wheel to assist in counteracting the oversteer or understeer condition.

- Oversteer - when the vehicle is turning more than appropriate for the steering wheel position.
- Understeer - when the vehicle is turning less than appropriate for the steering wheel position.

WARNING!

The Electronic Stability Control System (ESC) cannot prevent the natural laws of physics from acting on the vehicle, nor can it increase the traction afforded by prevailing road conditions. ESC cannot prevent all accidents, including those resulting from excessive speed in turns, driving on very slippery surfaces, or hydroplaning. ESC also cannot prevent accidents resulting from loss of vehicle control due to inappropriate driver input for the conditions. Only a safe, attentive, and skillful driver can prevent accidents. The capabilities of an ESC equipped vehicle must never be exploited in a reckless or dangerous manner which could jeopardize the user's safety or the safety of others.

ESC Operating Modes

The "ESC Off" switch is located in the center switch bank, next to the hazard flasher switch.

ESC On

This mode is the normal operating mode for ESC equipped vehicles. Whenever the vehicle is started, the ESC system will be in this mode. This mode should be used for most driving situations. ESC should only be turned off for specific reasons as noted below.

ESC Partial Off

This mode is entered by momentarily pushing the "ESC Off" switch.

When in the "Partial Off" mode, the TCS portion of ESC, except for the "limited slip" feature described in the TCS section, has been disabled and the "ESC OFF Indicator Light" will be illuminated. When in the "Partial Off"

mode, ESC will operate without engine torque management. This mode is intended to be used if the vehicle is in deep snow, sand or gravel conditions and more wheel spin than ESC would normally allow is required to gain traction. To turn ESC on again, momentarily push the "ESC Off" switch. This will restore the normal "ESC On" mode of operation.

WARNING!

- **When in "Partial Off" mode, the TCS functionality of ESC, (except for the limited slip feature described in the TCS section), has been disabled and the "ESC Off Indicator Light" will be illuminated. When in "Partial Off" mode, the engine power reduction feature of TCS is disabled, and the enhanced vehicle stability offered by the ESC system is reduced.**
- **Trailer Sway Control (TSC) is disabled when the ESC system is in the "Partial Off" mode.**

NOTE: To improve the vehicle's traction when driving with snow chains, or starting off in deep snow, sand or gravel, it may be desirable to switch to the "Partial Off" mode by pushing the "ESC Off" switch. Once the situation requiring ESC to be switched to the "Partial Off" mode is overcome, turn ESC back on by momentarily pushing the "ESC Off" switch. This may be done while the vehicle is in motion.

ESC Activation/Malfunction Indicator Light And ESC OFF Indicator Light

The "ESC Activation/Malfunction Indicator Light" in the instrument cluster will come on when the ignition switch is turned to the ON position. It should turn off with the engine running. If the "ESC Activation/Malfunction Indicator Light" comes on continuously with the engine running, a malfunction has been detected in the ESC system. If this

light remains on after several ignition cycles, and the vehicle has been driven several miles (kilometers) at speeds greater than 30 mph (48 km/h), see your authorized dealer as soon as possible to have the problem diagnosed and corrected.

The "ESC Activation/Malfunction Indicator Light" (located in the instrument cluster) starts to flash as soon as the tires lose traction and the ESC system becomes active. The "ESC Activation/Malfunction Indicator Light" also flashes when TCS is active. If the "ESC Activation/Malfunction Indicator Light" begins to flash during acceleration, ease up on the accelerator and apply as little throttle as possible. Be sure to adapt your speed and driving to the prevailing road conditions.

NOTE:

- The "ESC Activation/Malfunction Indicator Light" and the "ESC OFF Indicator Light" come on momentarily each time the ignition switch is turned ON.
- Each time the ignition is turned ON, the ESC system will be ON even if it was turned off previously.
- The ESC system will make buzzing or clicking sounds when it is active. This is normal; the sounds will stop when ESC becomes inactive following the maneuver that caused the ESC activation.

The "ESC OFF Indicator Light" indicates the Electronic Stability Control (ESC) is off.

Trailer Sway Control (TSC)

TSC uses sensors in the vehicle to recognize an excessively swaying trailer and will take the appropriate actions to attempt to stop the sway. The system may reduce engine power and apply the brake of the appropriate wheel(s) to counteract the sway of the trailer. TSC will become active automatically once an excessively

swaying trailer is recognized. Note that TSC cannot stop all trailers from swaying. Always use caution when towing a trailer and follow the trailer tongue weight recommendations. Refer to "Trailer Towing" in this section for further information. When TSC is functioning, the "ESC Activation/Malfunction Indicator Light" will flash, the engine power may be reduced and you may feel the brakes being applied to individual wheels to attempt to stop the trailer from swaying. TSC is disabled when the ESC system is in the "Partial Off" mode.

WARNING!

If TSC activates while driving, slow the vehicle down, stop at the nearest safe location, and adjust the trailer load to eliminate trailer sway.

Hill Start Assist (HSA)

The HSA system is designed to assist the driver when starting a vehicle from a stop on a hill. HSA will maintain the level of brake pressure the driver applied for a short period of time after the driver takes their foot off of the brake pedal. If the driver does not apply the throttle during this short period of time, the system will release brake pressure and the vehicle will roll down the hill. The system will release brake pressure in proportion to the amount of throttle applied as the vehicle starts to move in the intended direction of travel.

HSA Activation Criteria

The following criteria must be met in order for HSA to activate:

- Vehicle must be stopped.
- Vehicle must be on a 6% (approximate) grade or greater hill.

- Gear selection matches vehicle uphill direction (i.e., vehicle facing uphill is in forward gear; vehicle backing uphill is in REVERSE gear).

HSA will work in REVERSE and all forward gears when the activation criteria have been met. The system will not activate if the vehicle is placed in NEUTRAL or PARK.

WARNING!

There may be situations on minor hills with a loaded vehicle, or while pulling a trailer, when the system will not activate and slight rolling may occur. This could cause a collision with another vehicle or object. Always remember the driver is responsible for braking the vehicle.

Towing With HSA

HSA will provide assistance when starting on a grade when pulling a trailer.

WARNING!

- **If you use a trailer brake controller with your trailer, your trailer brakes may be activated and deactivated with the brake switch. If so, when the brake pedal is released, there may not be enough brake pressure to hold the vehicle and trailer on a hill and this could cause a collision with another vehicle or object behind you. In order to avoid rolling down the hill while resuming acceleration, manually activate the trailer brake prior to releasing the brake pedal. Always remember the driver is responsible for braking the vehicle.**

(Continued)

WARNING! *(Continued)*

- **HSA is not a parking brake. If you stop the vehicle on a hill without putting the transmission in PARK and using the parking brake, it will roll down the hill and could cause a collision with another vehicle or object. Always remember to use the parking brake while parking on a hill, and that the driver is responsible for braking the vehicle.**

TIRE SAFETY INFORMATION

Tire Markings

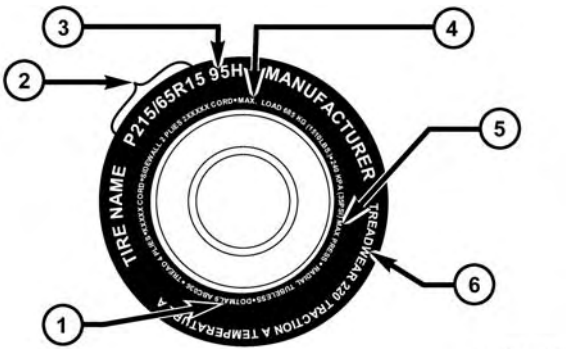

1 — U.S. DOT Safety Standards Code (TIN)
2 — Size Designation
3 — Service Description
4 — Maximum Load
5 — Maximum Pressure
6 — Treadwear, Traction and Temperature Grades

NOTE:

- P (Passenger) — Metric tire sizing is based on U.S. design standards. P-Metric tires have the letter "P" molded into the sidewall preceding the size designation. Example: P215/65R15 95H.
- European — Metric tire sizing is based on European design standards. Tires designed to this standard have the tire size molded into the sidewall beginning with the section width. The letter "P" is absent from this tire size designation. Example: 215/65R15 96H.
- LT (Light Truck) — Metric tire sizing is based on U.S. design standards. The size designation for LT-Metric tires is the same as for P-Metric tires except for the letters "LT" that are molded into the sidewall preceding the size designation. Example: LT235/85R16.
- Temporary spare tires are designed for temporary emergency use only. Temporary high pressure compact spare tires have the letter "T" or "S" molded into the sidewall preceding the size designation. Example: T145/80D18 103M.
- High flotation tire sizing is based on U.S. design standards and it begins with the tire diameter molded into the sidewall. Example: 31x10.5 R15 LT.

Tire Sizing Chart

EXAMPLE:

Example Size Designation: P215/65R15XL 95H, 215/65R15 96H, LT235/85R16C, T145/80D18 103M, 31x10.5 R15 LT
P = Passenger car tire size based on U.S. design standards, or **"....blank...."** = Passenger car tire based on European design standards, or **LT** = Light truck tire based on U.S. design standards, or **T or S** = Temporary spare tire or **31** = Overall diameter in inches (in)
215, 235, 145 = Section width in millimeters (mm)
65, 85, 80 = Aspect ratio in percent (%) – Ratio of section height to section width of tire, or **10.5** = Section width in inches (in)
R = Construction code – "R" means radial construction, or – "D" means diagonal or bias construction
15, 16, 18 = Rim diameter in inches (in)

EXAMPLE:

Service Description:
95 = Load Index – A numerical code associated with the maximum load a tire can carry
H = Speed Symbol – A symbol indicating the range of speeds at which a tire can carry a load corresponding to its load index under certain operating conditions – The maximum speed corresponding to the speed symbol should only be achieved under specified operating conditions (i.e., tire pressure, vehicle loading, road conditions, and posted speed limits)

EXAMPLE:

Load Identification:
Absence of the following load identification symbols on the sidewall of the tire indicates a Standard Load (SL) tire:
- **XL** = Extra load (or reinforced) tire, or
- **LL** = Light load tire or
- **C, D, E, F, G** = Load range associated with the maximum load a tire can carry at a specified pressure

Maximum Load – Maximum load indicates the maximum load this tire is designed to carry

Maximum Pressure – Maximum pressure indicates the maximum permissible cold tire inflation pressure for this tire

Tire Identification Number (TIN)

The TIN may be found on one or both sides of the tire, however, the date code may only be on one side. Tires with white sidewalls will have the full TIN, including the date code, located on the white sidewall side of the tire. Look for the TIN on the outboard side of black sidewall tires as mounted on the vehicle. If the TIN is not found on the outboard side, then you will find it on the inboard side of the tire.

EXAMPLE:
DOT MA L9 ABCD 0301
DOT = Department of Transportation – This symbol certifies that the tire is in compliance with the U.S. Department of Transportation tire safety standards and is approved for highway use
MA = Code representing the tire manufacturing location (two digits)
L9 = Code representing the tire size (two digits)
ABCD = Code used by the tire manufacturer (one to four digits)
03 = Number representing the week in which the tire was manufactured (two digits) – 03 means the 3rd week
01 = Number representing the year in which the tire was manufactured (two digits) – 01 means the year 2001 – Prior to July 2000, tire manufacturers were only required to have one number to represent the year in which the tire was manufactured. Example: 031 could represent the 3rd week of 1981 or 1991

Tire Terminology And Definitions

Term	Definition
B-Pillar	The vehicle B-Pillar is the structural member of the body located behind the front door.
Cold Tire Inflation Pressure	Cold tire inflation pressure is defined as the tire pressure after the vehicle has not been driven for at least three hours, or driven less than 1 mile (1.6 km) after sitting for a minimum of three hours. Inflation pressure is measured in units of PSI (pounds per square inch) or kPa (kilopascals).
Maximum Inflation Pressure	The maximum inflation pressure is the maximum permissible cold tire inflation pressure for this tire. The maximum inflation pressure is molded into the sidewall.
Recommended Cold Tire Inflation Pressure	Vehicle manufacturer's recommended cold tire inflation pressure as shown on the tire placard.
Tire Placard	A label permanently attached to the vehicle describing the vehicle's loading capacity, the original equipment tire sizes and the recommended cold tire inflation pressures.

Tire Loading And Tire Pressure

Tire And Loading Information Placard Location

NOTE: The proper cold tire inflation pressure is listed on the driver's side B-Pillar or the rear edge of the driver's side door.

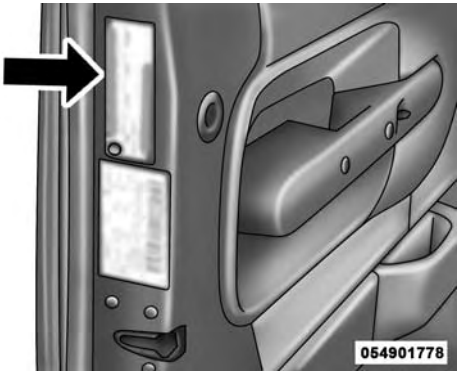

Example Tire Placard Location (Door)

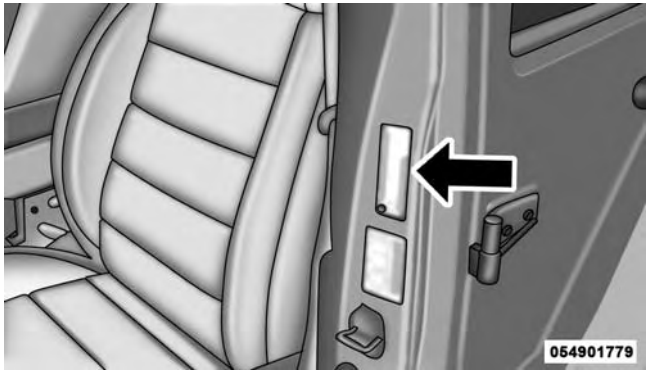

Example Tire Placard Location (B-Pillar)

Tire And Loading Information Placard

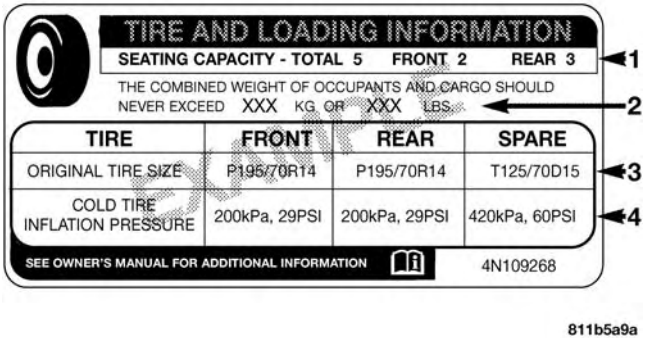

Tire And Loading Information Placard

This placard tells you important information about the:

1. Number of people that can be carried in the vehicle.
2. Total weight your vehicle can carry.

3. Tire size designed for your vehicle.
4. Cold tire inflation pressures for the front, rear, and spare tires.

Loading

The vehicle maximum load on the tire must not exceed the load carrying capacity of the tire on your vehicle. You will not exceed the tire's load carrying capacity if you adhere to the loading conditions, tire size, and cold tire inflation pressures specified on the Tire and Loading Information placard and in the "Vehicle Loading" section of this manual.

NOTE: Under a maximum loaded vehicle condition, gross axle weight ratings (GAWRs) for the front and rear axles must not be exceeded. For further information on GAWRs, vehicle loading, and trailer towing, refer to "Vehicle Loading" in this manual.

To determine the maximum loading conditions of your vehicle, locate the statement "The combined weight of occupants and cargo should never exceed XXX lbs or XXX kg" on the Tire and Loading Information placard. The combined weight of occupants, cargo/luggage and trailer tongue weight (if applicable) should never exceed the weight referenced here.

Steps For Determining Correct Load Limit

1. Locate the statement "The combined weight of occupants and cargo should never exceed XXX lbs or XXX kg" on your vehicle's placard.
2. Determine the combined weight of the driver and passengers that will be riding in your vehicle.
3. Subtract the combined weight of the driver and passengers from XXX lbs or XXX kg.

4. The resulting figure equals the available amount of cargo and luggage load capacity. For example, if "XXX" amount equals 1,400 lbs (635 kg) and there will be five 150 lb (68 kg) passengers in your vehicle, the amount of available cargo and luggage load capacity is 650 lbs (295 kg) (since 5 x 150 lbs (68 kg) = 750 lbs (340 kg), and 1400 lbs (635 kg) – 750 lbs (340 kg) = 650 lbs [295 kg]).

5. Determine the combined weight of luggage and cargo being loaded on the vehicle. That weight may not safely exceed the available cargo and luggage load capacity calculated in step 4.

NOTE:

- If your vehicle will be towing a trailer, load from your trailer will be transferred to your vehicle. The following table shows examples on how to calculate total load, cargo/luggage, and towing capacities of your vehicle with varying seating configurations and number and size of occupants. This table is for illustration purposes only and may not be accurate for the seating and load carry capacity of your vehicle.

- For the following example, the combined weight of occupants and cargo should never exceed 865 lbs (392 kg).

Occupants			Combined weight of occupants and cargo from Tire Placard	MINUS	Combined Occupant's weight	=	AVAILABLE Cargo/Luggage and Trailer Tongue Weight
TOTAL	FRONT	REAR					
EXAMPLE 1							
5	2	3	865 lbs	minus	Occupant 1: 200 lbs Occupant 2: 130 lbs Occupant 3: 160 lbs Occupant 4: 100 lbs Occupant 5: 80 lbs TOTAL WEIGHT: 670 lbs 670 lbs	=	195 lbs
EXAMPLE 2							
3	2	1	865 lbs	minus	Occupant 1: 210 lbs Occupant 2: 180 lbs Occupant 3: 150 lbs TOTAL WEIGHT: 540 lbs 540 lbs	=	325 lbs
EXAMPLE 3							
2	2	0	865 lbs	minus	Occupant 1: 200 lbs Occupant 2: 200 lbs TOTAL WEIGHT: 400 lbs 400 lbs	=	465 lbs

EXAMPLE

811a4d11

WARNING!

Overloading of your tires is dangerous. Overloading can cause tire failure, affect vehicle handling, and increase your stopping distance. Use tires of the recommended load capacity for your vehicle. Never overload them.

TIRES — GENERAL INFORMATION

Tire Pressure

Proper tire inflation pressure is essential to the safe and satisfactory operation of your vehicle. Four primary areas are affected by improper tire pressure:

- Safety and Vehicle Stability
- Economy
- Tread Wear
- Ride Comfort

Safety

WARNING!

- **Improperly inflated tires are dangerous and can cause collisions.**
- **Under-inflation increases tire flexing and can result in overheating and tire failure.**
- **Over-inflation reduces a tire's ability to cushion shock. Objects on the road and chuckholes can cause damage that result in tire failure.**
- **Overinflated or under-inflated tires can affect vehicle handling and can fail suddenly, resulting in loss of vehicle control.**
- **Unequal tire pressures can cause steering problems. You could lose control of your vehicle.**
- **Unequal tire pressures from one side of the vehicle to the other can cause the vehicle to drift to the right or left.**

(Continued)

WARNING! ***(Continued)***

- **Always drive with each tire inflated to the recommended cold tire inflation pressure.**

Both under-inflation and over-inflation affect the stability of the vehicle and can produce a feeling of sluggish response or over responsiveness in the steering.

NOTE:

- Unequal tire pressures from side to side may cause erratic and unpredictable steering response.
- Unequal tire pressure from side to side may cause the vehicle to drift left or right.

Fuel Economy

Underinflated tires will increase tire rolling resistance resulting in higher fuel consumption.

Tread Wear

Improper cold tire inflation pressures can cause abnormal wear patterns and reduced tread life, resulting in the need for earlier tire replacement.

Ride Comfort And Vehicle Stability

Proper tire inflation contributes to a comfortable ride. Over-inflation produces a jarring and uncomfortable ride.

Tire Inflation Pressures

The proper cold tire inflation pressure is listed on the driver's side B-Pillar or rear edge of the driver's side door.

At least once a month:

- Check and adjust tire pressure with a good quality pocket-type pressure gauge. Do not make a visual judgement when determining proper inflation. Tires may look properly inflated even when they are under-inflated.
- Inspect tires for signs of tire wear or visible damage.

CAUTION!

After inspecting or adjusting the tire pressure, always reinstall the valve stem cap. This will prevent moisture and dirt from entering the valve stem, which could damage the valve stem.

Inflation pressures specified on the placard are always "cold tire inflation pressure". Cold tire inflation pressure is defined as the tire pressure after the vehicle has not been driven for at least three hours, or driven less than 1 mile (1.6 km) after sitting for a minimum of three hours.

The cold tire inflation pressure must not exceed the maximum inflation pressure molded into the tire sidewall.

Check tire pressures more often if subject to a wide range of outdoor temperatures, as tire pressures vary with temperature changes.

Tire pressures change by approximately 1 psi (7 kPa) per 12°F (7°C) of air temperature change. Keep this in mind when checking tire pressure inside a garage, especially in the Winter.

Example: If garage temperature = 68°F (20°C) and the outside temperature = 32°F (0°C) then the cold tire inflation pressure should be increased by 3 psi (21 kPa), which equals 1 psi (7 kPa) for every 12°F (7°C) for this outside temperature condition.

Tire pressure may increase from 2 to 6 psi (13 to 40 kPa) during operation. DO NOT reduce this normal pressure build up or your tire pressure will be too low.

Tire Pressures For High Speed Operation

The manufacturer advocates driving at safe speeds and within posted speed limits. Where speed limits or conditions are such that the vehicle can be driven at high speeds, maintaining correct tire inflation pressure is very important. Increased tire pressure and reduced vehicle loading may be required for high-speed vehicle operation. Refer to your authorized tire dealer or original equipment vehicle dealer for recommended safe operating speeds, loading and cold tire inflation pressures.

WARNING!

High speed driving with your vehicle under maximum load is dangerous. The added strain on your tires could cause them to fail. You could have a serious collision. Do not drive a vehicle loaded to the maximum capacity at continuous speeds above 75 mph (120 km/h).

Radial Ply Tires

WARNING!

Combining radial ply tires with other types of tires on your vehicle will cause your vehicle to handle poorly. The instability could cause a collision. Always use radial ply tires in sets of four. Never combine them with other types of tires.

Tire Repair

If your tire becomes damaged, it may be repaired if it meets the following criteria:

- The tire has not been driven on when flat.
- The damage is only on the tread section of your tire (sidewall damage is not repairable).
- The puncture is no greater than a ¼ of an inch (6 mm).

Consult an authorized tire dealer for tire repairs and additional information.

Damaged Run Flat tires, or Run Flat tires that have experienced a loss of pressure should be replaced immediately with another Run Flat tire of identical size and service description (Load Index and Speed Symbol).

Tire Types

All Season Tires — If Equipped

All Season tires provide traction for all seasons (Spring, Summer, Fall and Winter). Traction levels may vary between different all season tires. All season tires can be identified by the M+S, M&S, M/S or MS designation on the tire sidewall. Use all season tires only in sets of four; failure to do so may adversely affect the safety and handling of your vehicle.

Summer Or Three Season Tires — If Equipped

Summer tires provide traction in both wet and dry conditions, and are not intended to be driven in snow or on ice. If your vehicle is equipped with Summer tires, be aware these tires are not designed for Winter or cold driving conditions. Install Winter tires on your vehicle when ambient temperatures are less than 40°F (5°C) or if roads are covered with ice or snow. For more information, contact an authorized dealer.

Summer tires do not contain the all season designation or mountain/snowflake symbol on the tire sidewall. Use Summer tires only in sets of four; failure to do so may adversely affect the safety and handling of your vehicle.

WARNING!

Do not use Summer tires in snow/ice conditions. You could lose vehicle control, resulting in severe injury or death. Driving too fast for conditions also creates the possibility of loss of vehicle control.

Snow Tires

Some areas of the country require the use of snow tires during the Winter. Snow tires can be identified by a "mountain/snowflake" symbol on the tire sidewall.

If you need snow tires, select tires equivalent in size and type to the original equipment tires. Use snow tires only in sets of four; failure to do so may adversely affect the safety and handling of your vehicle.

Snow tires generally have lower speed ratings than what was originally equipped with your vehicle and should not be operated at sustained speeds over 75 mph (120 km/h). For speeds above 75 mph (120 km/h) refer to original equipment or an authorized tire dealer for recommended safe operating speeds, loading and cold tire inflation pressures.

While studded tires improve performance on ice, skid and traction capability on wet or dry surfaces may be poorer than that of non-studded tires. Some states prohibit studded tires; therefore, local laws should be checked before using these tire types.

Run Flat Tires — If Equipped

Run Flat tires allow you the capability to drive 50 miles (80 km) at 50 mph (80 km/h) after a rapid loss of inflation pressure. This rapid loss of inflation is referred to as the Run Flat mode. A Run Flat mode occurs when the tire inflation pressure is of/or below 14 psi (96 kPa). Once a Run Flat tire reaches the run flat mode it has limited driving capabilities and needs to be replaced immediately. A Run Flat tire is not repairable.

It is not recommended driving a vehicle loaded at full capacity or to tow a trailer while a tire is in the run flat mode.

See the tire pressure monitoring section for more information.

Spare Tires — If Equipped

NOTE: For vehicles equipped with Tire Service Kit instead of a spare tire, please refer to "Tire Service Kit" in "What To Do In Emergencies" for further information.

CAUTION!

Because of the reduced ground clearance, do not take your vehicle through an automatic car wash with a compact or limited-use temporary spare installed. Damage to the vehicle may result.

Spare Tire Matching Original Equipped Tire And Wheel — If Equipped

Your vehicle may be equipped with a spare tire and wheel equivalent in look and function to the original equipment tire and wheel found on the front or rear axle of your vehicle. This spare tire may be used in the tire

rotation for your vehicle. If your vehicle has this option, refer to an authorized tire dealer for the recommended tire rotation pattern.

Compact Spare Tire — If Equipped

The compact spare is for temporary emergency use only. You can identify if your vehicle is equipped with a compact spare by looking at the spare tire description on the Tire and Loading Information Placard located on the driver's side door opening or on the sidewall of the tire. Compact spare tire descriptions begin with the letter "T" or "S" preceding the size designation. Example: T145/80D18 103M.

T, S = Temporary Spare Tire

Since this tire has limited tread life, the original equipment tire should be repaired (or replaced) and reinstalled on your vehicle at the first opportunity.

Do not install a wheel cover or attempt to mount a conventional tire on the compact spare wheel, since the wheel is designed specifically for the compact spare tire. Do not install more than one compact spare tire and wheel on the vehicle at any given time.

WARNING!

Compact spares are for temporary emergency use only. With these spares, do not drive more than 50 mph (80 km/h). Temporary use spares have limited tread life. When the tread is worn to the tread wear indicators, the temporary use spare tire needs to be replaced. Be sure to follow the warnings, which apply to your spare. Failure to do so could result in spare tire failure and loss of vehicle control.

Full Size Spare — If Equipped

The full size spare is for temporary emergency use only. This tire may look like the originally equipped tire on the

front or rear axle of your vehicle, but it is not. This spare tire may have limited tread life. When the tread is worn to the tread wear indicators, the temporary use full size spare tire needs to be replaced. Since it is not the same as your original equipment tire, replace (or repair) the original equipment tire and reinstall on the vehicle at the first opportunity.

Limited-Use Spare — If Equipped

The limited-use spare tire is for temporary emergency use only. This tire is identified by a label located on the limited-use spare wheel. This label contains the driving limitations for this spare. This tire may look like the original equipped tire on the front or rear axle of your vehicle, but it is not. Installation of this limited-use spare tire affects vehicle handling. Since it is not the same as your original equipment tire, replace (or repair) the original equipment tire and reinstall on the vehicle at the first opportunity.

WARNING!

Limited-use spares are for emergency use only. Installation of this limited-use spare tire affects vehicle handling. With this tire, do not drive more than the speed listed on the limit-use spare wheel. Keep inflated to the cold tire inflation pressures listed on your Tire and Loading Information Placard located on the driver's side B-Pillar or the rear edge of the driver's side door. Replace (or repair) the original equipment tire at the first opportunity and reinstall it on your vehicle. Failure to do so could result in loss of vehicle control.

Tire Spinning

When stuck in mud, sand, snow, or ice conditions, do not spin your vehicle's wheels above 30 mph (48 km/h) or for longer than 30 seconds continuously without stopping.

Refer to “Freeing A Stuck Vehicle” in “What To Do In Emergencies” for further information.

WARNING!

Fast spinning tires can be dangerous. Forces generated by excessive wheel speeds may cause tire damage or failure. A tire could explode and injure someone. Do not spin your vehicle’s wheels faster than 30 mph (48 km/h) for more than 30 seconds continuously when you are stuck, and do not let anyone near a spinning wheel, no matter what the speed.

Tread Wear Indicators

Tread wear indicators are in the original equipment tires to help you in determining when your tires should be replaced.

055007576

1 — Worn Tire
2 — New Tire

These indicators are molded into the bottom of the tread grooves. They will appear as bands when the tread depth becomes a 1/16 of an inch (2 mm). When the tread is worn to the tread wear indicators, the tire should be replaced. Refer to “Replacement Tires” in this section for further information.

Life Of Tire

The service life of a tire is dependent upon varying factors including, but not limited to:

- Driving style.
- Tire pressure - Improper cold tire inflation pressures can cause uneven wear patterns to develop across the tire tread. These abnormal wear patterns will reduce tread life, resulting in the need for earlier tire replacement.
- Distance driven.
- Performance tires, tires with a speed rating of V or higher, and Summer tires typically have a reduced tread life. Rotation of these tires per the vehicle maintenance schedule is highly recommended.

WARNING!

Tires and the spare tire should be replaced after six years, regardless of the remaining tread. Failure to follow this warning can result in sudden tire failure. You could lose control and have a collision resulting in serious injury or death.

Keep dismounted tires in a cool, dry place with as little exposure to light as possible. Protect tires from contact with oil, grease, and gasoline.

Replacement Tires

The tires on your new vehicle provide a balance of many characteristics. They should be inspected regularly for wear and correct cold tire inflation pressures. The manufacturer strongly recommends that you use tires equivalent to the originals in size, quality and performance when replacement is needed. Refer to the paragraph on "Tread Wear Indicator". Refer to the Tire and Loading Information placard or the Vehicle Certification Label for the size designation of your tire. The Load Index and Speed Symbol for your tire will be found on the original equipment tire sidewall. See the Tire Sizing Chart example found in the "Tire Safety Information" section of this manual for more information relating to the Load Index and Speed Symbol of a tire.

It is recommended to replace the two front tires or two rear tires as a pair. Replacing just one tire can seriously affect your vehicle's handling. If you ever replace a wheel, make sure that the wheel's specifications match those of the original wheels.

It is recommended you contact your authorized tire dealer or original equipment dealer with any questions you may have on tire specifications or capability. Failure to use equivalent replacement tires may adversely affect the safety, handling, and ride of your vehicle.

WARNING!

- **Do not use a tire, wheel size or rating other than that specified for your vehicle. Some combinations of unapproved tires and wheels may change suspension dimensions and performance characteristics, resulting in changes to steering, handling, and**

(Continued)

WARNING! *(Continued)*

braking of your vehicle. This can cause unpredictable handling and stress to steering and suspension components. You could lose control and have a collision resulting in serious injury or death. Use only the tire and wheel sizes with load ratings approved for your vehicle.

- **Never use a tire with a smaller load index or capacity, other than what was originally equipped on your vehicle. Using a tire with a smaller load index could result in tire overloading and failure. You could lose control and have a collision.**
- **Failure to equip your vehicle with tires having adequate speed capability can result in sudden tire failure and loss of vehicle control.**

CAUTION!

Replacing original tires with tires of a different size may result in false speedometer and odometer readings.

TIRE CHAINS (TRACTION DEVICES)

Use of traction devices require sufficient tire-to-body clearance. Follow these recommendations to guard against damage.

- Traction device must be of proper size for the tire, as recommended by the traction device manufacturer.
- Install on Front Tires Only
- Tire chains for a 225/75R16 tire with a Quality Chain Corp Light Truck Highway Service (Non-Cam) tire chain or equivalent is recommended.

WARNING!

Using tires of different size and type (M+S, Snow) between front and rear axles can cause unpredictable handling. You could lose control and have a collision.

CAUTION!

To avoid damage to your vehicle or tires, observe the following precautions:

- **Because of restricted traction device clearance between tires and other suspension components, it is important that only traction devices in good condition are used. Broken devices can cause serious damage. Stop the vehicle immediately if noise occurs that could indicate device breakage. Remove the damaged parts of the device before further use.**

(Continued)

CAUTION! ***(Continued)***

- **Install device as tightly as possible and then retighten after driving about ½ mile (0.8 km).**
- **Do not exceed 30 mph (48 km/h).**
- **Drive cautiously and avoid severe turns and large bumps, especially with a loaded vehicle.**
- **Do not drive for a prolonged period on dry pavement.**
- **Observe the traction device manufacturer's instructions on the method of installation, operating speed, and conditions for use. Always use the suggested operating speed of the device manufacturer's if it is less than 30 mph (48 km/h).**
- **Do not use traction devices on a compact spare tire.**

TIRE ROTATION RECOMMENDATIONS

The tires on the front and rear of your vehicle operate at different loads and perform different steering, driving, and braking functions. For these reasons, they wear at unequal rates.

These effects can be reduced by timely rotation of tires. The benefits of rotation are especially worthwhile with aggressive tread designs such as those on all season type tires. Rotation will increase tread life, help to maintain mud, snow and wet traction levels, and contribute to a smooth, quiet ride.

Refer to the "Maintenance Schedule" for the proper maintenance intervals. The reasons for any rapid or unusual wear should be corrected prior to rotation being performed.

The suggested rotation method is the "rearward cross" shown in the following diagram. This rotation pattern does not apply to some directional tires that must not be reversed.

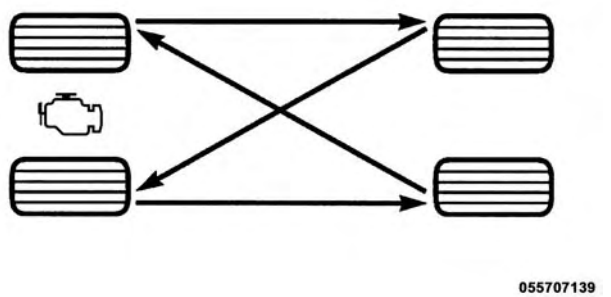

Tire Rotation

TIRE PRESSURE MONITORING SYSTEM (TPMS)

The Tire Pressure Monitor System (TPMS) will warn the driver of a low tire pressure based on the vehicle recommended cold tire pressure.

The tire pressure will vary with temperature by about 1 psi (7 kPa) for every 12°F (6.5°C). This means that when the outside temperature decreases, the tire pressure will decrease. Tire pressure should always be set based on cold inflation tire pressure. This is defined as the tire pressure after the vehicle has not been driven for at least three hours, or driven less than 1 mile (1.6 km) after a three hour period. The cold tire inflation pressure must not exceed the maximum inflation pressure molded into the tire sidewall. Refer to "Tires – General Information" in "Starting And Operating" for information on how to properly inflate the vehicle's tires. The tire pressure will also increase as the vehicle is driven, this is normal and there should be no adjustment for this increased pressure.

The TPMS will warn the driver of a low tire pressure if the tire pressure falls below the low pressure warning limit for any reason, including low temperature effects, or natural pressure loss through the tire.

The TPMS will continue to warn the driver of low tire pressure as long as the condition exists, and will not turn off until the tire pressure is at or above the recommended cold tire pressure on the placard. Once the low tire pressure warning (Tire Pressure Monitoring Telltale Light) illuminates, you must increase the tire pressure to the recommended cold tire pressure in order for the Tire Pressure Monitoring Telltale Light to turn off. The system will automatically update and the Tire Pressure Monitoring Telltale Light will turn off once the system receives the updated tire pressures. The vehicle may need to be driven for up to 20 minutes above 15 mph (24 km/h) in order for the TPMS to receive this information.

For example, your vehicle may have a recommended cold (parked for more than three hours) tire pressure of 30 psi (207 kPa). If the ambient temperature is 68°F (20°C) and the measured tire pressure is 27 psi (186 kPa), a temperature drop to 20°F (-7°C) will decrease the tire pressure to approximately 23 psi (159 kPa). This tire pressure is sufficiently low enough to turn on the Tire Pressure Monitoring Telltale Light. Driving the vehicle may cause the tire pressure to rise to approximately 27 psi (186 kPa), but the Tire Pressure Monitoring Telltale Light will still be on. In this situation, the Tire Pressure Monitoring Telltale Light will turn off only after the tires are inflated to the vehicle's recommended cold tire pressure value.

CAUTION!

- **The TPMS has been optimized for the original equipment tires and wheels. TPMS pressures and warnings have been established for the tire size equipped on your vehicle. Undesirable system operation or sensor damage may result when using replacement equipment that is not of the same size, type, and/or style. Aftermarket wheels can cause sensor damage. Using aftermarket tire sealants may cause the Tire Pressure Monitoring System (TPMS) sensor to become inoperable. After using an aftermarket tire sealant it is recommended that you take your vehicle to your an authorized dealership to have your sensor function checked.**
- **After inspecting or adjusting the tire pressure, always reinstall the valve stem cap. This will prevent moisture and dirt from entering the valve stem, which could damage the Tire Pressure Monitoring Sensor.**

NOTE:

- The TPMS is not intended to replace normal tire care and maintenance, or to provide warning of a tire failure or condition.
- The TPMS should not be used as a tire pressure gauge while adjusting your tire pressure.
- Driving on a significantly under-inflated tire causes the tire to overheat and can lead to tire failure. Under-inflation also reduces fuel efficiency and tire tread life, and may affect the vehicle's handling and stopping ability.
- The TPMS is not a substitute for proper tire maintenance, and it is the driver's responsibility to maintain correct tire pressure using an accurate tire gauge, even if under-inflation has not reached the level to trigger illumination of the Tire Pressure Monitoring Telltale Light.
- Seasonal temperature changes will affect tire pressure, and the TPMS will monitor the actual tire pressure in the tire.

Base System

This is the TPMS warning indicator located in the instrument cluster.

The TPMS uses wireless technology with wheel rim mounted electronic sensors to monitor tire pressure levels. Sensors, mounted to each wheel as part of the valve stem, transmit tire pressure readings to the Receiver Module.

NOTE: It is particularly important for you to check the tire pressure in all of the tires on your vehicle regularly and to maintain the proper pressure.

The TPMS consists of the following components:

- Receiver Module.
- Five Tire Pressure Monitoring Sensors.
- Tire Pressure Monitoring Telltale Light.

Tire Pressure Monitoring Low Pressure Warnings

The Tire Pressure Monitoring Telltale Light will illuminate in the instrument cluster, an audible chime will be activated, and the "Check tire pressure" text message will display when one or more of the four active road tire pressures are low. Should this occur, you should stop as soon as possible, check the inflation pressure of each tire on your vehicle, and inflate each tire to the vehicle's recommended cold placard pressure value. The system will automatically update and the Tire Pressure Monitoring Light will extinguish once the updated tire pressures have been received. The vehicle may need to be driven for up to 20 minutes above 15 mph (24 km/h) to receive this information.

Check TPMS Warnings

The Tire Pressure Monitoring Telltale Light will flash on and off for 75 seconds and remain on solid when a system fault is detected, an audible chime will be activated and the "Tire Pressure Monitoring Unavailable" text message will display. If the ignition key is cycled, this sequence will repeat providing the system fault still exists. The Tire Pressure Monitoring Telltale Light will turn off when the fault condition no longer exists. A system fault can occur with any of the following scenarios:

1. Jamming due to electronic devices or driving next to facilities emitting the same radio frequencies as the TPM sensors.

2. Installing some form of aftermarket window tinting that affects radio wave signals.
3. Snow or ice around the wheels or wheel housings.
4. Using tire chains on the vehicle.
5. Using wheels/tires not equipped with TPM sensors.

NOTE: Your vehicle is equipped with a regular size spare wheel.

1. The spare tire has a tire pressure monitoring sensor, but it is not monitored until it is mounted in place of any of the existing four road tires.
2. If you install the spare tire in place of a road tire that has a pressure below the low-pressure warning limit, upon the next ignition key cycle, a chime will sound and the Tire Pressure Monitoring Telltale Light will turn ON due to the low tire condition. Then, after driving the vehicle for up to 20 minutes above 15mph (24km/h), the system will recognize the new sensor, so turn off the telltale.
3. If a spare tire not equipped with tire pressure monitoring sensor is used, then the Tire Pressure Monitoring Telltale Light will turn ON, flashing for 75 seconds and then remaining solid for each subsequent ignition key cycle.

NOTE: For a correct Tire Pressure Monitoring behavior, please wait for about 20 minutes in key-off during each tire substitution.

General Information

This device complies with Part 15 of the FCC rules and RSS-210 of Industry Canada. Operation is subject to the following two conditions:

(1) This device may not cause harmful interference.

(2) This device must accept any interference received, including interference that may cause undesired operation.

NOTE: Changes or modifications not expressly approved by the party responsible for compliance could void the user's authority to operate the equipment.

FUEL REQUIREMENTS

3.6L Engine

This engine is designed to meet all emissions regulations and provide excellent fuel economy and performance when using high-quality unleaded "regular" gasoline having an octane rating of 87. The use of premium gasoline is not recommended, as it will not provide any benefit over regular gasoline in these engines.

Light spark knock at low engine speeds is not harmful to your engine. However, continued heavy spark knock at high speeds can cause damage and immediate service is required. Poor quality gasoline can cause problems such as hard starting, stalling, and hesitations. If you experience these symptoms, try another brand of gasoline before considering service for the vehicle.

Over 40 auto manufacturers worldwide have issued and endorsed consistent gasoline specifications (the Worldwide Fuel Charter, WWFC) which define fuel properties necessary to deliver enhanced emissions, performance, and durability for your vehicle. The manufacturer recommends the use of gasolines that meet the WWFC specifications if they are available.

Reformulated Gasoline

Many areas of the country require the use of cleaner burning gasoline referred to as "Reformulated Gasoline".

Reformulated gasoline contain oxygenates and are specifically blended to reduce vehicle emissions and improve air quality.

The use of reformulated gasoline is recommended. Properly blended reformulated gasoline will provide improved performance and durability of engine and fuel system components.

Gasoline/Oxygenate Blends

Some fuel suppliers blend unleaded gasoline with oxygenates such as ethanol.

CAUTION!

DO NOT use gasoline containing Methanol or gasoline containing more than 10% Ethanol. Use of these blends may result in starting and drivability problems, damage critical fuel system components, cause

(Continued)

CAUTION! ***(Continued)***

emissions to exceed the applicable standard, and/or cause the "Malfunction Indicator Light" to illuminate. Please observe pump labels as they should clearly communicate if a fuel contains greater than 10% ethanol.

Problems that result from using gasoline containing Methanol or gasoline containing more than 10% ethanol are not the responsibility of the manufacturer and may void or not be covered under New Vehicle Limited Warranty.

E-85 Usage In Non-Flex Fuel Vehicles

Non-Flex Fuel Vehicles (FFV) are compatible with gasoline containing up to 10% ethanol (E10). Gasoline with higher ethanol content may void the New Vehicle Limited Warranty.

If a Non-FFV vehicle is inadvertently fueled with E-85 fuel, the engine will have some or all of these symptoms:

- Operate in a lean mode.
- OBD II “Malfunction Indicator Light” on.
- Poor engine performance.
- Poor cold start and cold drivability.
- Increased risk for fuel system component corrosion.

MMT In Gasoline

Methylcyclopentadienyl Manganese Tricarbonyl (MMT) is a manganese-containing metallic additive that is blended into some gasoline to increase octane. Gasoline blended with MMT provides no performance advantage beyond gasoline of the same octane number without MMT. Gasoline blended with MMT reduces spark plug life and reduces emissions system performance in some vehicles. The manufacturer recommends that gasoline without MMT be used in your vehicle. The MMT content of gasoline may not be indicated on the gasoline pump, therefore, you should ask your gasoline retailer whether the gasoline contains MMT. MMT is prohibited in Federal and California reformulated gasoline.

Materials Added To Fuel

All gasoline sold in the United States is required to contain effective detergent additives. Use of additional detergents or other additives is not needed under normal conditions and they would result in additional cost. Therefore, you should not have to add anything to the fuel.

Fuel System Cautions

CAUTION!

Follow these guidelines to maintain your vehicle's performance:

- **The use of leaded gasoline is prohibited by Federal law. Using leaded gasoline can impair engine performance and damage the emissions control system.**
- **An out-of-tune engine or certain fuel or ignition malfunctions can cause the catalytic converter to overheat. If you notice a pungent burning odor or some light smoke, your engine may be out of tune or malfunctioning and may require immediate service. Contact your authorized dealer for service assistance.**

(Continued)

CAUTION! *(Continued)*

- **The use of fuel additives, which are now being sold as octane enhancers, is not recommended. Most of these products contain high concentrations of methanol. Fuel system damage or vehicle performance problems resulting from the use of such fuels or additives is not the responsibility of the manufacturer and may void or not be covered under the New Vehicle Limited Warranty.**

NOTE: Intentional tampering with the emissions control system can result in civil penalties being assessed against you.

Carbon Monoxide Warnings

WARNING!

Carbon monoxide (CO) in exhaust gases is deadly. Follow the precautions below to prevent carbon monoxide poisoning:

- **Do not inhale exhaust gases. They contain carbon monoxide, a colorless and odorless gas, which can kill. Never run the engine in a closed area, such as a garage, and never sit in a parked vehicle with the engine running for an extended period. If the vehicle is stopped in an open area with the engine running for more than a short period, adjust the ventilation system to force fresh, outside air into the vehicle.**

(Continued)

WARNING! ***(Continued)***

- **Guard against carbon monoxide with proper maintenance. Have the exhaust system inspected every time the vehicle is raised. Have any abnormal conditions repaired promptly. Until repaired, drive with all side windows fully open.**

COPYRIGHT ©2015 FCA US LLC

ADDING FUEL

Fuel Filler Cap (Gas Cap)

The gas cap is located behind the fuel filler door on the left side of the vehicle. If the gas cap is lost or damaged, be sure the replacement cap is for use with this vehicle.

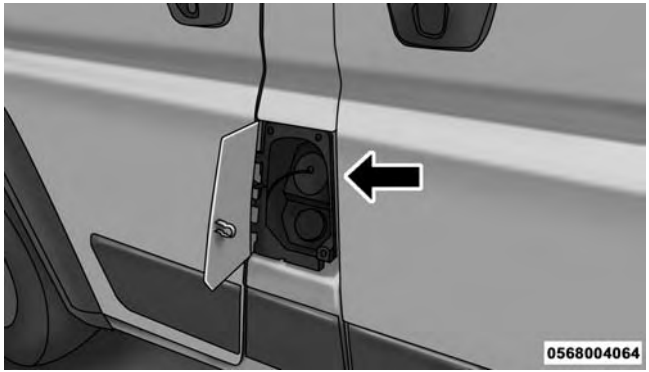

Fuel Filler Cap

CAUTION!

- **Damage to the fuel system or emissions control system could result from using an improper fuel tank filler tube cap. A poorly fitting cap could let**

(Continued)

CAUTION! *(Continued)*

impurities into the fuel system and may cause the "Malfunction Indicator Light (MIL)" to turn on, due to fuel vapors escaping from the system.

- **To avoid fuel spillage and overfilling, do not "top off" the fuel tank after filling.**

WARNING!

- **Never have any smoking materials lit in or near the vehicle when the gas cap is removed or the tank is being filled.**
- **Never add fuel when the engine is running. This is in violation of most state and federal fire regulations and may cause the MIL to turn on.**

(Continued)

WARNING! ***(Continued)***

- **A fire may result if gasoline is pumped into a portable container that is inside of a vehicle. You could be burned. Always place gas containers on the ground while filling.**

NOTE:

- When the fuel nozzle "clicks" or shuts off, the fuel tank is full.
- Tighten the fuel filler cap until you hear a "clicking" sound. This is an indication that the fuel filler cap is properly tightened.
- If the gas cap is not tightened properly, the MIL may come on. Be sure the gas cap is tightened every time the vehicle is refueled.

Loose Fuel Filler Cap Message

If the vehicle diagnostic system determines that the fuel filler cap is loose, improperly installed, or damaged, a "Check fuel cap" message will be displayed in the Electronic Vehicle Information Center (EVIC). Refer to "Electronic Vehicle Information Center" in "Understanding Your Instrument Panel" for further information. Tighten the fuel filler cap until a "clicking" sound is heard. This is an indication that the fuel filler cap is properly tightened. Refer to "Onboard Diagnostic System" in "Maintaining Your Vehicle" for further information.

If the problem continues, the message will appear the next time the vehicle is started. See your authorized dealer as soon as possible.

VEHICLE LOADING

As required by National Highway Traffic Safety Administration regulations, your vehicle has a certification label affixed to the driver's side door or B-Pillar.

If seats are removed for carrying cargo, do not exceed the specified GVWR and GAWR.

Vehicle Certification Label

Your vehicle has a Vehicle Certification Label affixed to the drivers side B-Pillar or the rear of the driver's door.

The label contains the following information:

- Name of manufacturer
- Month and year of manufacture
- Gross Vehicle Weight Rating (GVWR)
- Gross Axle Weight Rating (GAWR) front
- Gross Axle Weight Rating (GAWR) rear
- Vehicle Identification Number (VIN)
- Type of Vehicle
- Month Day and Hour of Manufacture (MDH)

The bar code allows a computer scanner to read the VIN.

Gross Vehicle Weight Rating (GVWR)

The GVWR is the total allowable weight of your vehicle. This includes driver, passengers, and cargo. The total load must be limited so that you do not exceed the GVWR.

Gross Axle Weight Rating (GAWR)

The GAWR is the maximum capacity of the front and rear axles. Distribute the load over the front and rear axles evenly. Make sure that you do not exceed either front or rear GAWR.

WARNING!

Because the front wheels steer the vehicle, it is important that you do not exceed the maximum front or rear GAWR. A dangerous driving condition can result if either rating is exceeded. You could lose control of the vehicle and have a collision.

Tire Size

The tire size on the Vehicle Certification Label represents the actual tire size on your vehicle. Replacement tires must be equal to the load capacity of this tire size.

Rim Size

This is the rim size that is appropriate for the tire size listed.

Inflation Pressure

This is the cold tire inflation pressure for your vehicle for all loading conditions up to full GAWR.

Curb Weight

The curb weight of a vehicle is defined as the total weight of the vehicle with all fluids, including vehicle fuel, at full capacity conditions, and with no occupants or cargo loaded into the vehicle. The front and rear curb weight values are determined by weighing your vehicle on a commercial scale before any occupants or cargo are added.

Overloading

The load carrying components (axle, springs, tires, wheels, etc.) of your vehicle will provide satisfactory service as long as you do not exceed the GVWR and the front and rear GAWR.

The best way to figure out the total weight of your vehicle is to weigh it when it is fully loaded and ready for operation. Weigh it on a commercial scale to ensure that it is not over the GVWR.

Figure out the weight on the front and rear of the vehicle separately. It is important that you distribute the load evenly over the front and rear axles.

Overloading can cause potential safety hazards and shorten useful service life. Heavier axles or suspension components do not necessarily increase the vehicle's GVWR.

Loading

To load your vehicle properly, first figure out its empty weight, axle-by-axle and side-by-side. Store heavier items down low and be sure you distribute their weight as evenly as possible. Stow all loose items securely before driving. If weighing the loaded vehicle shows that you have exceeded either GAWR, but the total load is within the specified GVWR, you must redistribute the weight. Improper weight distribution can have an adverse effect on the way your vehicle steers and handles and the way the brakes operate.

NOTE: Refer to the "Vehicle Certification Label" affixed to the rear of the driver's door for your vehicle's GVWR and GAWRs.

TRAILER TOWING

In this section you will find safety tips and information on limits to the type of towing you can reasonably do with your vehicle. Before towing a trailer, carefully review this information to tow your load as efficiently and safely as possible.

To maintain the New Vehicle Limited Warranty coverage, follow the requirements and recommendations in this manual concerning vehicles used for trailer towing.

Common Towing Definitions

The following trailer towing related definitions will assist you in understanding the following information:

Gross Vehicle Weight Rating (GVWR)

The GVWR is the total allowable weight of your vehicle. This includes driver, passengers, cargo and tongue weight. The total load must be limited so that you do not exceed the GVWR. Refer to "Vehicle Loading/Vehicle Certification Label" in "Starting And Operating" for further information.

Gross Trailer Weight (GTW)

The GTW is the weight of the trailer plus the weight of all cargo, consumables and equipment (permanent or temporary) loaded in or on the trailer in its "loaded and ready for operation" condition.

The recommended way to measure GTW is to put your fully loaded trailer on a vehicle scale. The entire weight of the trailer must be supported by the scale.

Gross Axle Weight Rating (GAWR)

The GAWR is the maximum capacity of the front and rear axles. Distribute the load over the front and rear axles evenly. Make sure that you do not exceed either front or rear GAWR. Refer to "Vehicle Loading/Vehicle Certification Label" in "Starting And Operating" for further information.

WARNING!

It is important that you do not exceed the maximum front or rear GAWR. A dangerous driving condition can result if either rating is exceeded. You could lose control of the vehicle and have a collision.

Tongue Weight (TW)

The tongue weight is the downward force exerted on the hitch ball by the trailer. The recommended tongue weight is 10% to 15% of the vehicle's GTW for a conventional hitch. You must consider this as part of the load on your vehicle.

Frontal Area

The frontal area is the maximum height multiplied by the maximum width of the front of a trailer.

Trailer Sway Control

The trailer sway control can be a mechanical telescoping link that can be installed between the hitch receiver and the trailer tongue that typically provides adjustable friction associated with the telescoping motion to dampen any unwanted trailer swaying motions while traveling.

If equipped, the electronic Trailer Sway Control (TSC) recognizes a swaying trailer and automatically applies individual wheel brakes and/or reduces engine power to attempt to eliminate the trailer sway.

Weight-Carrying Hitch

A weight-carrying hitch supports the trailer tongue weight, just as if it were luggage located at a hitch ball or some other connecting point of the vehicle. These kinds of hitches are the most popular on the market today and they are commonly used to tow small and medium sized trailers.

Weight-Distributing Hitch

A weight-distributing system works by applying leverage through spring (load) bars. They are typically used for heavier loads to distribute trailer tongue weight to the tow vehicle's front axle and the trailer axle(s). When used in accordance with the manufacturer's directions, it provides for a more level ride, offering more consistent

steering and brake control thereby enhancing towing safety. The addition of a friction/hydraulic sway control also dampens sway caused by traffic and crosswinds and contributes positively to tow vehicle and trailer stability. Trailer sway control and a weight distributing (load equalizing) hitch are recommended for heavier Tongue Weights (TW) and may be required depending on vehicle and trailer configuration/loading to comply with Gross Axle Weight Rating (GAWR) requirements.

WARNING!

- **An improperly adjusted Weight Distributing Hitch system may reduce handling, stability, braking performance, and could result in a collision.**
- **Weight Distributing Systems may not be compatible with Surge Brake Couplers. Consult with your hitch and trailer manufacturer or a reputable Recreational Vehicle dealer for additional information.**

Trailer Hitch Classification

The following chart provides the industry standard for the maximum trailer weight a given trailer hitch class can tow and should be used to assist you in selecting the correct trailer hitch for your intended towing condition.

Trailer Hitch Classification Definitions	
Class	**Max. Trailer Hitch Industry Standards**
Class I - Light Duty	2,000 lbs (907 kg)
Class II - Medium Duty	3,500 lbs (1 587 kg)
Class III - Heavy Duty	5,000 lbs (2 268 kg)
Class IV - Extra Heavy Duty	10,000 lbs (4 540 kg)
Refer to the "Trailer Towing Weights (Maximum Trailer Weight Ratings)" chart for the Maximum Gross Trailer Weight (GTW) towable for your given drivetrain.	
All trailer hitches should be professionally installed on your vehicle.	

Trailer Towing Weights (Maximum Trailer Weight Ratings)

NOTE: For additional trailer towing information (maximum trailer weight ratings) refer to the following website addresses:

- **ramtrucks.com/en/towing_guide/**
- **ramtruck.ca (Canada)**
- **rambodybuilder.com**

Trailer And Tongue Weight

Always load a trailer with 60% to 65% of the weight in the front of the trailer. This places 10% to 15% of the Gross Trailer Weight (GTW) on the tow hitch of your vehicle. Loads balanced over the wheels or heavier in the rear can cause the trailer to sway **severely** side to side

which will cause loss of control of the vehicle and trailer. Failure to load trailers heavier in front is the cause of many trailer collisions.

Never exceed the maximum tongue weight stamped on your bumper or trailer hitch.

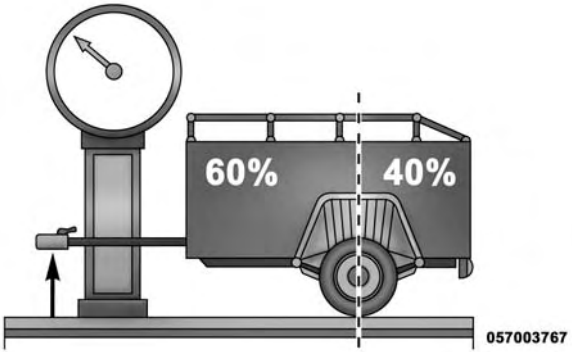

Consider the following items when computing the weight on the rear axle of the vehicle:

- The tongue weight of the trailer.
- The weight of any other type of cargo or equipment put in or on your vehicle.
- The weight of the driver and all passengers.

NOTE: Remember that everything put into or on the trailer adds to the load on your vehicle. Also, additional factory-installed options or dealer-installed options must be considered as part of the total load on your vehicle. Refer to the "Tire And Loading Information" placard for the maximum combined weight of occupants and cargo for your vehicle.

Towing Requirements

To promote proper break-in of your new vehicle drive-train components, the following guidelines are recommended.

CAUTION!

- **Do not tow a trailer at all during the first 500 miles (805 km) the new vehicle is driven. The engine, axle or other parts could be damaged.**
- **Then, during the first 500 miles (805 km) that a trailer is towed, do not drive over 50 mph (80 km/h) and do not make starts at full throttle. This helps the engine and other parts of the vehicle wear in at the heavier loads.**

Perform the maintenance listed in the "Maintenance Schedule." Refer to "Maintenance Schedule" for the proper maintenance intervals. When towing a trailer, never exceed the GAWR or GCWR ratings.

WARNING!

Improper towing can lead to a collision. Follow these guidelines to make your trailer towing as safe as possible:

- **Make certain that the load is secured in the trailer and will not shift during travel. When trailering cargo that is not fully secured, dynamic load shifts can occur that may be difficult for the driver to control. You could lose control of your vehicle and have a collision.**
- **When hauling cargo or towing a trailer, do not overload your vehicle or trailer. Overloading can cause a loss of control, poor performance or damage to brakes, axle, engine, transmission, steering, suspension, chassis structure or tires.**

(Continued)

WARNING! ***(Continued)***

- **Safety chains must always be used between your vehicle and trailer. Always connect the chains to the hook retainers of the vehicle hitch. Cross the chains under the trailer tongue and allow enough slack for turning corners.**
- **Vehicles with trailers should not be parked on a grade. When parking, apply the parking brake on the tow vehicle. Put the tow vehicle transmission in PARK. For four-wheel drive vehicles, make sure the transfer case is not in NEUTRAL. Always, block or "chock" the trailer wheels.**
- **GCWR must not be exceeded.**
- **Total weight must be distributed between the tow vehicle and the trailer such that the following four ratings are not exceeded:**

  1. GVWR

(Continued)

WARNING! ***(Continued)***

2. GTW

3. GAWR

4. Tongue weight rating for the trailer hitch utilized.

Towing Requirements — Tires

- Do not attempt to tow a trailer while using a compact spare tire.
- Proper tire inflation pressures are essential to the safe and satisfactory operation of your vehicle. Refer to "Tires – General Information" in "Starting And Operating" for proper tire inflation procedures.
- Check the trailer tires for proper tire inflation pressures before trailer usage.

- Check for signs of tire wear or visible tire damage before towing a trailer. Refer to "Tires – General Information" in "Starting And Operating" for the proper inspection procedure.
- When replacing tires, refer to "Tires – General Information" in "Starting And Operating" for the proper tire replacement procedures. Replacing tires with a higher load carrying capacity will not increase the vehicle's GVWR and GAWR limits.

Towing Requirements — Trailer Brakes

- Do **not** interconnect the hydraulic brake system or vacuum system of your vehicle with that of the trailer. This could cause inadequate braking and possible personal injury.
- An electronically actuated trailer brake controller is required when towing a trailer with electronically actuated brakes. When towing a trailer equipped with a hydraulic surge actuated brake system, an electronic brake controller is not required.
- Trailer brakes are recommended for trailers over 1,000 lbs (454 kg) and required for trailers in excess of 2,000 lbs (907 kg).

WARNING!

- **Do not connect trailer brakes to your vehicle's hydraulic brake lines. It can overload your brake system and cause it to fail. You might not have brakes when you need them and could have a collision.**
- **Towing any trailer will increase your stopping distance. When towing you should allow for additional space between your vehicle and the vehicle in front of you. Failure to do so could result in a collision.**

CAUTION!

If the trailer weighs more than 1,000 lbs (454 kg) loaded, it should have its own brakes and they should be of adequate capacity. Failure to do this could lead to accelerated brake lining wear, higher brake pedal effort, and longer stopping distances.

Towing Requirements — Trailer Lights And Wiring

Whenever you pull a trailer, regardless of the trailer size, stoplights and turn signals on the trailer are required for motoring safety.

The Trailer Tow Package may include a four- and seven-pin wiring harness. Use a factory approved trailer harness and connector.

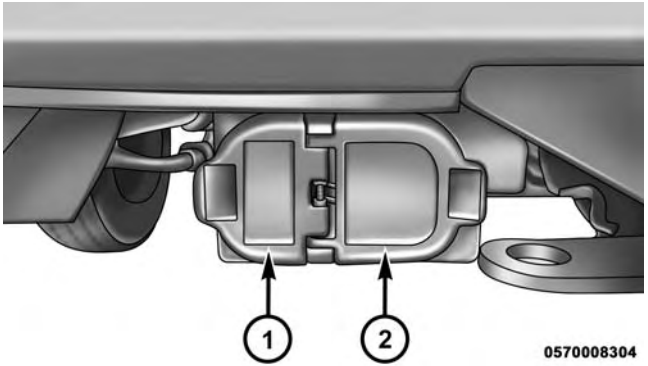

Trailer Electrical Connector Location

1 — Four-Pin Connector Location
2 — Seven-Pin Connector Location

NOTE: Do not cut or splice wiring into the vehicles wiring harness.

The electrical connections are all complete to the vehicle but you must mate the harness to a trailer connector. Refer to the following illustrations.

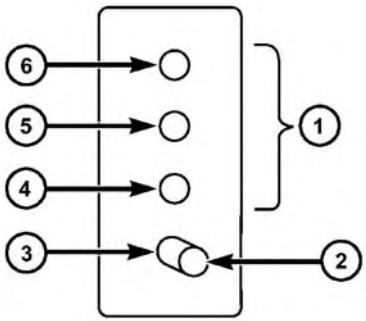

057003766

Four-Pin Connector

1 — Female Pins
2 — Male Pin
3 — Ground
4 — Park
5 — Left Stop/Turn
6 — Right Stop/Turn

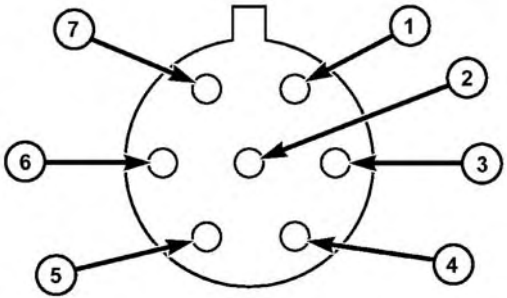

057003765

Seven-Pin Connector

1 — Battery
2 — Backup Lamps
3 — Right Stop/Turn
4 — Electric Brakes
5 — Ground
6 — Left Stop/Turn
7 — Running Lamps

Towing Tips

Before setting out on a trip, practice turning, stopping, and backing up the trailer in an area located away from heavy traffic.

Automatic Transmission

The DRIVE range can be selected when towing. The transmission controls include a drive strategy to avoid frequent shifting when towing. However, if frequent shifting does occur while in DRIVE, select TOW/HAUL mode or select a lower gear range (using the Electronic Range Select [ERS] shift control).

NOTE: Using a lower gear range while operating the vehicle under heavy loading conditions will improve performance and extend transmission life by reducing excessive shifting and heat build up. This action will also provide better engine braking.

Tow/Haul Mode

To reduce the potential for automatic transmission overheating, activate the "TOW/HAUL" feature when driving in hilly areas, or select a lower gear range (using the Electronic Range Select (ERS) shift control) on more severe grades.

Electronic Speed Control — If Equipped

- Do not use in hilly terrain or with heavy loads.
- When using the speed control, if you experience speed drops greater than 10 mph (16 km/h), disengage until you can get back to cruising speed.
- Use speed control in flat terrain and with light loads to maximize fuel efficiency.

Cooling System

To reduce potential for engine and transmission overheating, take the following actions:

City Driving

When stopped for short periods, shift the transmission into NEUTRAL and increase engine idle speed.

Highway Driving

Reduce speed.

Air Conditioning

Turn off temporarily.

RECREATIONAL TOWING (BEHIND MOTORHOME, ETC.)

Towing This Vehicle Behind Another Vehicle

Towing Condition	Wheels OFF the Ground	Automatic Transmission
Flat Tow	NONE	**NOT ALLOWED**
Dolly Tow	Front	OK
	Rear	**NOT ALLOWED**
On Trailer	ALL	OK
NOTE: When recreationally towing your vehicle, always follow applicable state and provincial laws. Contact state and provincial Highway Safety offices for additional details.		

NOTE: For vehicles equipped with diesel engine, see important information in the Diesel Supplement.

Recreational Towing — Automatic Transmission

Recreational towing is allowed ONLY if the front wheels are OFF the ground. This may be accomplished using a tow dolly or vehicle trailer. If using a tow dolly, follow this procedure:

1. Properly secure the dolly to the tow vehicle, following the dolly manufacturer's instructions.
2. Drive the front wheels onto the tow dolly.
3. Firmly apply the parking brake. Place the transmission in PARK.
4. Properly secure the front wheels to the dolly, following the dolly manufacturer's instructions.
5. Release the parking brake.

CAUTION!

- **DO NOT flat tow this vehicle. Damage to the drivetrain will result. If this vehicle requires towing, make sure the drive wheels are OFF the ground.**
- **Towing this vehicle in violation of the above requirements can cause severe transmission damage. Damage from improper towing is not covered under the New Vehicle Limited Warranty.**

WHAT TO DO IN EMERGENCIES

CONTENTS

- HAZARD WARNING FLASHERS 287
- IF YOUR ENGINE OVERHEATS 287
- WHEEL AND TIRE TORQUE SPECIFICATIONS 288
  - Torque Specifications 289
- TIRE SERVICE KIT — IF EQUIPPED 290
  - Tire Service Kit Storage 291
  - Tire Service Kit Components And Operation . .291
  - Tire Service Kit Usage Precautions. 292
  - Sealing A Tire With Tire Service Kit 295
- JACKING AND TIRE CHANGING 301
  - Jack Location. 302
  - Removing The Spare Tire 302
  - Preparations 306
  - Jacking Instructions 307
  - Wheel Covers 317
- JUMP-STARTING PROCEDURES 317
  - Preparations For Jump-Start 318
  - Jump-Starting Procedure 319
  - Battery Location 322

■ FREEING A STUCK VEHICLE 323
■ SHIFT LEVER OVERRIDE 324
■ TOWING A DISABLED VEHICLE 324
□ Automatic Transmission 326

HAZARD WARNING FLASHERS

The Hazard Warning flasher switch is located on the instrument panel below the climate controls.

Push the switch to turn on the Hazard Warning flasher. When the switch is activated, all directional turn signals will flash on and off to warn oncoming traffic of an emergency. Push the switch a second time to turn off the Hazard Warning flashers.

This is an emergency warning system and it should not be used when the vehicle is in motion. Use it when your vehicle is disabled and it is creating a safety hazard for other motorists.

When you must leave the vehicle to seek assistance, the Hazard Warning flashers will continue to operate even though the ignition is placed in the OFF position.

NOTE: With extended use the Hazard Warning flashers may wear down your battery.

IF YOUR ENGINE OVERHEATS

In any of the following situations, you can reduce the potential for overheating by taking the appropriate action.

- On the highways — slow down.
- In city traffic — while stopped, place the transmission in NEUTRAL, but do not increase the engine idle speed while maintaining the motion of the vehicle with the brakes.

NOTE: There are steps that you can take to slow down an impending overheat condition:

- If your air conditioner (A/C) is on, turn it off. The A/C system adds heat to the engine cooling system and turning the A/C off can help remove this heat.
- You can also turn the temperature control to maximum heat, the mode control to floor and the blower control to high. This allows the heater core to act as a supplement to the radiator and aids in removing heat from the engine cooling system.

CAUTION!

Driving with a hot cooling system could damage your vehicle. If the temperature gauge reads HOT (H), pull over and stop the vehicle. Idle the vehicle with the air conditioner turned off until the pointer drops back into the normal range. If the pointer remains on HOT (H), and you hear continuous chimes, turn the engine off immediately and call for service.

WARNING!

You or others can be badly burned by hot engine coolant (antifreeze) or steam from your radiator. If you see or hear steam coming from under the hood, do not open the hood until the radiator has had time to cool. Never try to open a cooling system pressure cap when the radiator or coolant bottle is hot.

WHEEL AND TIRE TORQUE SPECIFICATIONS

Proper lug nut/bolt torque is very important to ensure that the wheel is properly mounted to the vehicle. Any time a wheel has been removed and reinstalled on the vehicle the lug nuts/bolts should be torqued using a properly calibrated torque wrench.

Torque Specifications

Lug Nut/Bolt Torque	**Lug Nut/ Bolt Size	Lug Nut/ Bolt Socket Size
145 Ft-Lbs (197 N·m)	M16 x 1.50	21 mm

**Use only your Authorized Dealer recommended lug nuts/bolts and clean or remove any dirt or oil before tightening.

Inspect the wheel mounting surface prior to mounting the tire and remove any corrosion or loose particles.

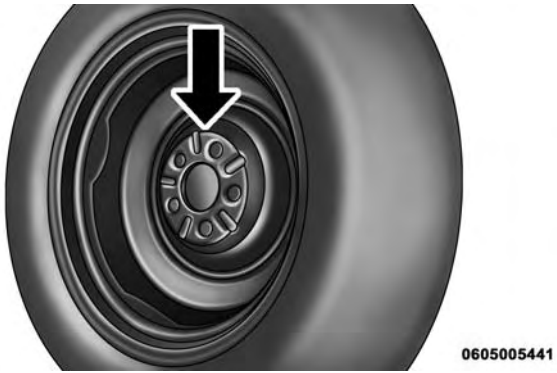

Wheel Mounting Surface

Tighten the lug nuts/bolts in a star pattern until each nut/bolt has been tightened twice.

0605006372

Torque Patterns

After 25 miles (40 km) check the lug nut/bolt torque to be sure that all the lug nuts/bolts are properly seated against the wheel.

WARNING!

To avoid the risk of forcing the vehicle off the jack, do not tighten the lug nuts fully until the vehicle has been lowered. Failure to follow this warning may result in personal injury.

TIRE SERVICE KIT — IF EQUIPPED

Small punctures up to 1/4 inch (6 mm) in the tire tread can be sealed with Tire Service Kit. Foreign objects (e.g., screws or nails) should not be removed from the tire. Tire Service Kit can be used in outside temperatures down to approximately -4°F (-20°C).

This kit will provide a temporary tire seal, allowing you to drive your vehicle up to 100 miles (160 km) with a maximum speed of 55 mph (90 km/h).

Tire Service Kit Storage

The Tire Service Kit is located under the passenger seat.

Tire Service Kit Components And Operation

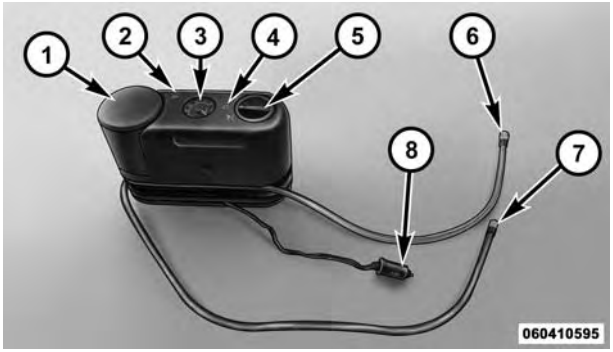

Tire Service Kit Components

1 — Sealant Bottle
2 — Deflation Button
3 — Pressure Gauge
4 — Power Button
5 — Mode Select Knob
6 — Sealant Hose (Clear)
7 — Air Pump Hose (Black)
8 — Power Plug (located on the bottom side of the Tire Service Kit)

Using The Mode Select Knob And Hoses

Your Tire Service Kit is equipped with the following symbols to indicate the air or sealant mode.

Selecting Air Mode

Push in the Mode Select Knob (5) and turn to this position for air pump operation only. Use the Black Air Pump Hose (7) when selecting this mode.

Selecting Sealant Mode

Push in the Mode Select Knob (5) and turn to this position to inject the Tire Service Kit Sealant and to inflate the tire. Use the Sealant Hose (clear hose) (6) when selecting this mode.

Using The Power Button

Push and release the Power Button (4) once to turn On the Tire Service Kit. Push and release the Power Button (4) again to turn Off the Tire Service Kit.

Using The Deflation Button

Push the Deflation Button (2) to reduce the air pressure in the tire if it becomes over-inflated.

Tire Service Kit Usage Precautions

- Replace the Tire Service Kit Sealant Bottle (1) and Sealant Hose (6) prior to the expiration date (printed at the lower right hand corner on the bottle label) to assure optimum operation of the system. Refer to “Sealing a Tire with Tire Service Kit” section (F) “Sealant Bottle and Hose Replacement”.

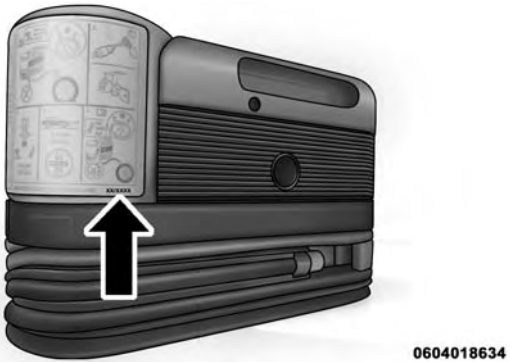

Tire Service Kit Expiration Date Location

- The Sealant Bottle (1) and Sealant Hose (6) are a one tire application use and need to be replaced after each use. Always replace these components immediately at your original equipment vehicle dealer.
- When the Tire Service Kit sealant is in a liquid form, clean water, and a damp cloth will remove the material from the vehicle or tire and wheel components. Once the sealant dries, it can easily be peeled off and properly discarded.
- For optimum performance, make sure the valve stem on the wheel is free of debris before connecting the Tire Service Kit.
- You can use the Tire Service Kit air pump to inflate bicycle tires. The kit also comes with two needles, located in the Accessory Storage Compartment (on the bottom of the air pump) for inflating sport balls, rafts, or similar inflatable items. However, use only the Air Pump Hose (7) and make sure the Mode Select Knob (5) is in the Air Mode when inflating such items to avoid injecting sealant into them. The Tire Service Kit Sealant is only intended to seal punctures less than 1/4 inch (6 mm) diameter in the tread of your vehicle.
- Do not lift or carry the Tire Service Kit by the hoses.

WARNING!

- **Do not attempt to seal a tire on the side of the vehicle closest to traffic. Pull far enough off the road to avoid the danger of being hit when using the Tire Service Kit.**
- **Do not use Tire Service Kit or drive the vehicle under the following circumstances:**
  - **If the puncture in the tire tread is approximately 1/4 inch (6 mm) or larger.**
  - **If the tire has any sidewall damage.**
  - **If the tire has any damage from driving with extremely low tire pressure.**
  - **If the tire has any damage from driving on a flat tire.**
  - **If the wheel has any damage.**
  - **If you are unsure of the condition of the tire or the wheel.**

(Continued)

WARNING! ***(Continued)***

- **Keep Tire Service Kit away from open flames or heat source.**
- **A loose Tire Service Kit thrown forward in a collision or hard stop could endanger the occupants of the vehicle. Always stow the Tire Service Kit in the place provided. Failure to follow these warnings can result in injuries that are serious or fatal to you, your passengers, and others around you.**
- **Take care not to allow the contents of Tire Service Kit to come in contact with hair, eyes, or clothing. Tire Service Kit sealant is harmful if inhaled, swallowed, or absorbed through the skin. It causes skin, eye, and respiratory irritation. Flush immediately with plenty of water if there is any contact with eyes or skin. Change clothing as soon as possible, if there is any contact with clothing.**

(Continued)

WARNING! *(Continued)*

- **Tire Service Kit Sealant solution contains latex. In case of an allergic reaction or rash, consult a physician immediately. Keep Tire Service Kit out of reach of children. If swallowed, rinse mouth immediately with plenty of water and drink plenty of water. Do not induce vomiting! Consult a physician immediately.**

Sealing A Tire With Tire Service Kit

(A) Whenever You Stop To Use Tire Service Kit:

1. Pull over to a safe location and turn on the vehicle's Hazard Warning flashers.
2. Verify that the valve stem (on the wheel with the deflated tire) is in a position that is near to the ground. This will allow the Tire Service Kit Hoses (6) and (7) to reach the valve stem and keep the Tire Service Kit flat on the ground. This will provide the best positioning of the kit when injecting the sealant into the deflated tire and running the air pump. Move the vehicle as necessary to place the valve stem in this position before proceeding.
3. Place the transmission in PARK (auto transmission) or in Gear (manual transmission) and place the ignition in the OFF position.
4. Set the parking brake.

(B) Setting Up To Use Tire Service Kit:

1. Push in the Mode Select Knob (5) and turn to the Sealant Mode position.
2. Uncoil the Sealant Hose (6) and then remove the cap from the fitting at the end of the hose.
3. Place the Tire Service Kit flat on the ground next to the deflated tire.

4. Remove the cap from the valve stem and then screw the fitting at the end of the Sealant Hose (6) onto the valve stem.
5. Uncoil the Power Plug (8) and insert the plug into the vehicle's 12 Volt power outlet.

NOTE: Do not remove foreign objects (e.g., screws or nails) from the tire.

(C) Injecting Tire Service Kit Sealant Into The Deflated Tire:

- Always start the engine before turning ON the Tire Service Kit.

NOTE: Manual transmission vehicles must have the parking brake engaged and the shift lever in NEUTRAL.

- After pushing the Power Button (4), the sealant (white fluid) will flow from the Sealant Bottle (1) through the Sealant Hose (6) and into the tire.

NOTE: Sealant may leak out through the puncture in the tire.

If the sealant (white fluid) does not flow within 0 – 10 seconds through the Sealant Hose (6):

1. Push the Power Button (4) to turn Off the Tire Service Kit. Disconnect the Sealant Hose (6) from the valve stem. Make sure the valve stem is free of debris. Reconnect the Sealant Hose (6) to the valve stem. Check that the Mode Select Knob (5) is in the Sealant Mode position and not Air Mode. Push the Power Button (4) to turn On the Tire Service Kit.
2. Connect the Power Plug (8) to a different 12 Volt power outlet in your vehicle or another vehicle, if available. Make sure the engine is running before turning ON the Tire Service Kit.
3. The Sealant Bottle (1) may be empty due to previous use. Call for assistance.

NOTE: If the Mode Select Knob (5) is on Air Mode and the pump is operating, air will dispense from the Air Pump Hose (7) only, not the Sealant Hose (6).

If the sealant (white fluid) does flow through the Sealant Hose (6):

1. Continue to operate the pump until sealant is no longer flowing through hose (typically takes 30 - 70 seconds). As the sealant flows through the Sealant Hose (6), the Pressure Gauge (3) can read as high as 70 psi (4.8 Bar). The Pressure Gauge (3) will decrease quickly from approximately 70 psi (4.8 Bar) to the actual tire pressure when the Sealant Bottle (1) is empty.
2. The pump will start to inject air into the tire immediately after the Sealant Bottle (1) is empty. Continue to operate the pump and inflate the tire to the pressure indicated on the tire pressure label on the driver-side latch pillar (recommended pressure). Check the tire pressure by looking at the Pressure Gauge (3).

If the tire does not inflate to at least 26 psi (1.8 Bar) pressure within 15 minutes:

- The tire is too badly damaged. Do not attempt to drive the vehicle further. Call for assistance.

NOTE: If the tire becomes over-inflated, push the Deflation Button to reduce the tire pressure to the recommended inflation pressure before continuing.

If the tire inflates to the recommended pressure or is at least 26 psi (1.8 Bar) pressure within 15 minutes:

1. Push the Power Button (4) to turn off the Tire Service Kit.
2. Remove the Speed Limit sticker from the top of the Sealant Bottle (1) and place the sticker on the instrument panel.

3. Immediately disconnect the Sealant Hose (6) from the valve stem, reinstall the cap on the fitting at the end of the hose, and place the Tire Service Kit in the vehicle storage location. Quickly proceed to (D) "Drive Vehicle."

CAUTION!

- **The metal end fitting from Power Plug (8) may get hot after use, so it should be handled carefully.**
- **Failure to reinstall the cap on the fitting at the end of the Sealant Hose (6) can result in sealant contacting your skin, clothing, and the vehicle's interior. It can also result in sealant contacting internal Tire Service Kit components which may cause permanent damage to the kit.**

(D) Drive Vehicle:

Immediately after injecting sealant and inflating the tire, drive the vehicle 5 miles (8 km) or 10 minutes to ensure distribution of the Tire Service Kit Sealant within the tire. Do not exceed 55 mph (90 km/h).

WARNING!

Tire Service Kit is not a permanent flat tire repair. Have the tire inspected and repaired or replaced after using Tire Service Kit. Do not exceed 55 mph (90 km/h) until the tire is repaired or replaced. Failure to follow this warning can result in injuries that are serious or fatal to you, your passengers, and others around you.

(E) After Driving:

Pull over to a safe location. Refer to "Whenever You Stop to Use Tire Service Kit" before continuing.

1. Push in the Mode Select Knob (5) and turn to the Air Mode position.
2. Uncoil the power plug and insert the plug into the vehicle's 12 Volt power outlet.
3. Uncoil the Air Pump Hose (7) (black in color) and screw the fitting at the end of hose (7) onto the valve stem.
4. Check the pressure in the tire by reading the Pressure Gauge (3).

If tire pressure is less than 19 psi (1.3 Bar):

The tire is too badly damaged. Do not attempt to drive the vehicle further. Call for assistance.

If the tire pressure is 19 psi (1.3 Bar) or higher:

1. Push the Power Button (4) to turn on Tire Service Kit and inflate the tire to the pressure indicated on the tire and loading information label on the driver-side door opening.

NOTE: If the tire becomes over-inflated, push the Deflation Button to reduce the tire pressure to the recommended inflation pressure before continuing.

2. Disconnect the Tire Service Kit from the valve stem, reinstall the cap on the valve stem and unplug from 12 Volt outlet.
3. Place the Tire Service Kit in its proper storage area in the vehicle.
4. Have the tire inspected and repaired or replaced at the earliest opportunity at an authorized dealer or tire service center.

5. Remove the Speed Limit sticker from the instrument panel after the tire has been repaired.
6. Replace the Sealant Bottle (1) and Sealant Hose (6) assembly at your authorized dealer as soon as possible. Refer to (F) "Sealant Bottle and Hose Replacement".

NOTE: When having the tire serviced, advise the authorized dealer or service center that the tire has been sealed using the Tire Service Kit.

(F) Sealant Bottle And Hose Replacement:

1. Uncoil the Sealant Hose (6) (clear in color).
2. Locate the round Sealant Bottle release button in the recessed area under the sealant bottle.
3. Push the Sealant Bottle release button. The Sealant Bottle (1) will pop up. Remove the bottle and dispose of it accordingly.
4. Clean any remaining sealant from the Tire Service Kit housing.
5. Position the new Sealant Bottle (1) in the housing so that the Sealant Hose (6) aligns with the hose slot in the front of the housing. Push the bottle into the housing. An audible click will be heard indicating the bottle is locked into place.
6. Verify that the cap is installed on the fitting at the end of the Sealant Hose (6) and return the hose to its storage area (located on the bottom of the air pump).
7. Return the Tire Service Kit to its storage location in the vehicle.

JACKING AND TIRE CHANGING

WARNING!

- **Do not attempt to change a tire on the side of the vehicle close to moving traffic. Pull far enough off the road to avoid the danger of being hit when operating the jack or changing the wheel.**
- **Being under a jacked-up vehicle is dangerous. The vehicle could slip off the jack and fall on you. You could be crushed. Never put any part of your body under a vehicle that is on a jack. If you need to get under a raised vehicle, take it to a service center where it can be raised on a lift.**
- **Never start or run the engine while the vehicle is on a jack.**

(Continued)

WARNING! ***(Continued)***

- **The jack is designed to be used as a tool for changing tires only. The jack should not be used to lift the vehicle for service purposes. The vehicle should be jacked on a firm level surface only. Avoid ice or slippery areas.**

Jack Location

The jack and jack tools are stored under the front passenger seat.

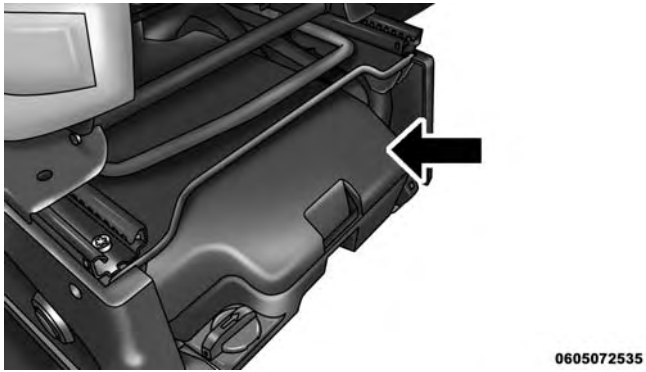

Jack Location

Removing The Spare Tire

1. Remove the spare tire before attempting to jack up the vehicle. Attach the lug bolt adapter to the winch extension and insert it into the winch mechanism.

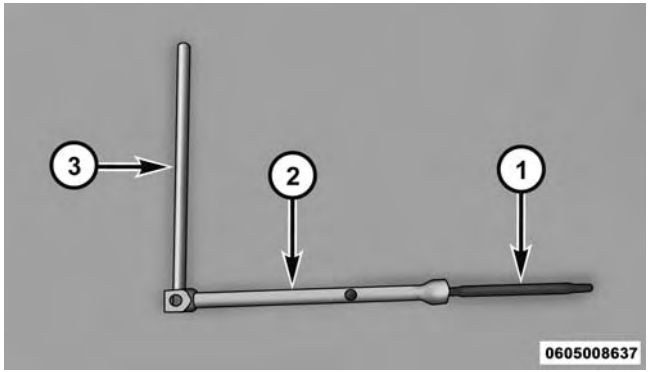

Jack Tools

1 — Winch Extension
2 — Lug Bolt Adapter
3 — Wrench Handle

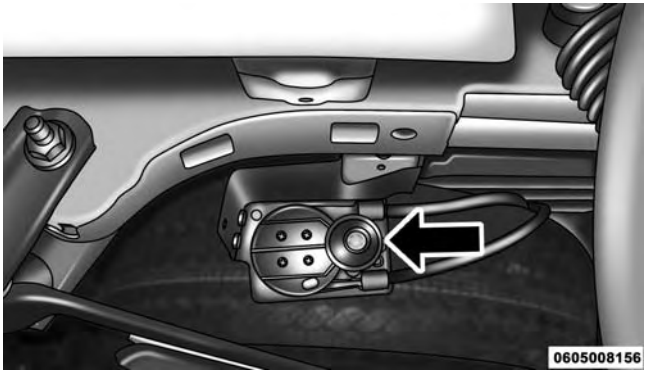

Winch Location

The winch mechanism is located under the rear of the vehicle to the right of the spare tire.

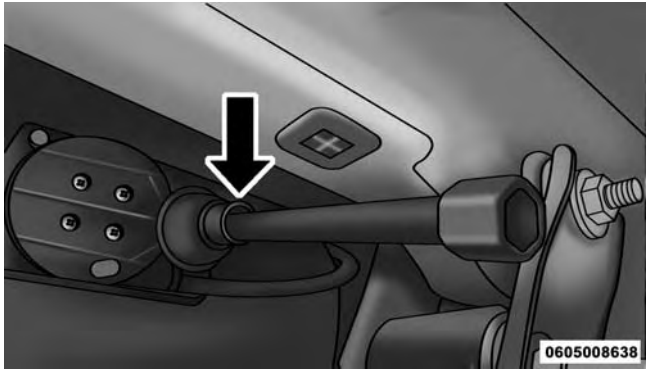

Winch Extension

2. Rotate the wheel wrench handle counterclockwise until the spare tire is on the ground with enough cable slack to allow you to pull it out from under the vehicle.

NOTE: The winch mechanism is designed for use with the winch extension tube only. Use of an air wrench or other power tools is not recommended and can damage the winch.

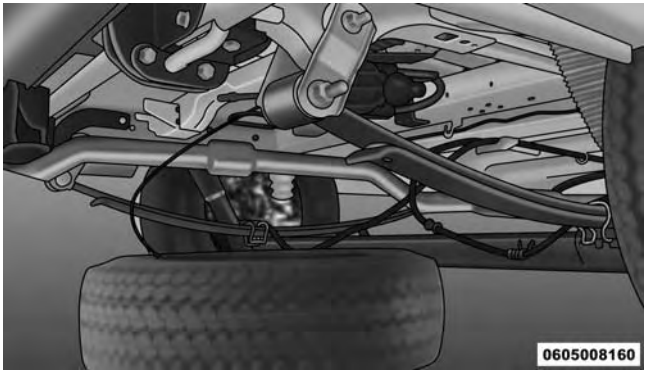

Lowering Spare Tire

3. Pull the spare tire out from under the vehicle to gain access to the spare tire retainer.

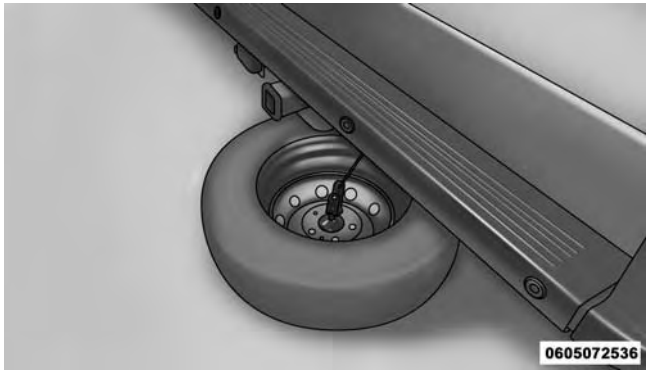

Spare Tire

4. Remove the retainer nut prior to removing the retainer from the wheel.

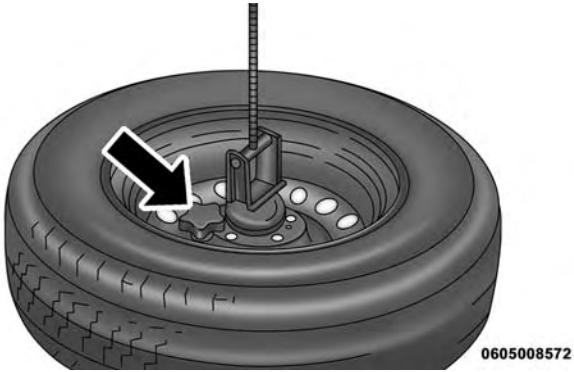

Retainer Nut

5. Lift the spare tire with one hand to give clearance to tilt the retainer at the end of the cable.

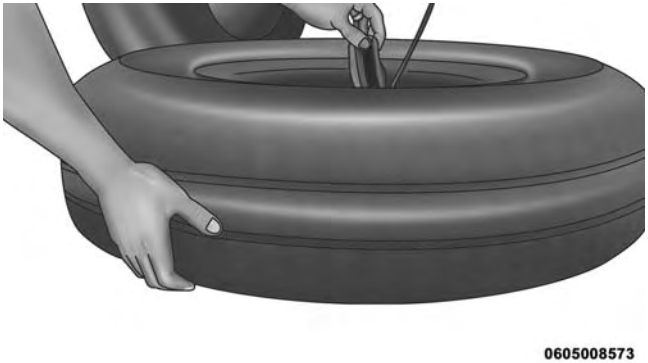

Lifting Spare Tire

6. Pull the retainer through the center of the wheel.

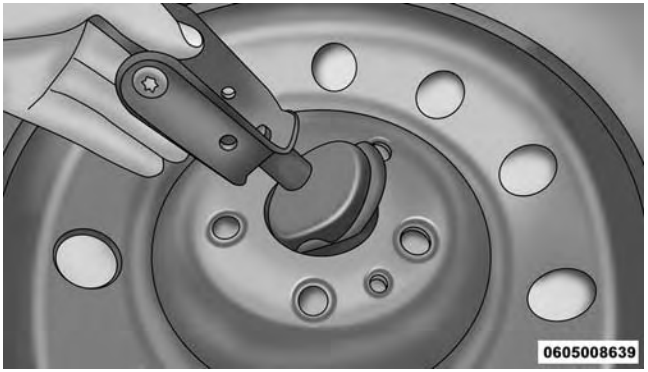

Retainer

Preparations

1. Park the vehicle on a firm, level surface. Avoid ice or slippery areas.

WARNING!

Do not attempt to change a tire on the side of the vehicle close to moving traffic, pull far enough off the road to avoid the danger of being hit when operating the jack or changing the wheel.

2. Turn on the Hazard Warning flasher.
3. Set the parking brake firmly.
4. Set an automatic transmission in PARK; a manual transmission in REVERSE.
5. Turn the ignition OFF.
6. Block the front and rear of the wheel diagonally opposite of the jacking position. For example, if changing the right front tire, block the left rear wheel.

NOTE: Passengers should not remain in the vehicle when the vehicle is being jacked.

Jacking Instructions

WARNING!

Carefully follow these tire changing warnings to help prevent personal injury or damage to your vehicle:

- **Always park on a firm, level surface as far from the edge of the roadway as possible before raising the vehicle.**
- **Turn on the Hazard Warning flashers.**
- **Block the wheel diagonally opposite the wheel to be raised.**
- **Set the parking brake firmly and set an automatic transmission in PARK; a manual transmission in REVERSE.**

(Continued)

WARNING! *(Continued)*

- **Never start or run the engine with the vehicle on a jack.**
- **Do not let anyone sit in the vehicle when it is on a jack.**
- **Do not get under the vehicle when it is on a jack. If you need to get under a raised vehicle, take it to a service center where it can be raised on a lift.**
- **Only use the jack in the positions indicated and for lifting this vehicle during a tire change.**
- **If working on or near a roadway, be extremely careful of motor traffic.**
- **To assure that spare tires, flat or inflated, are securely stowed, spares must be stowed with the valve stem facing the ground.**

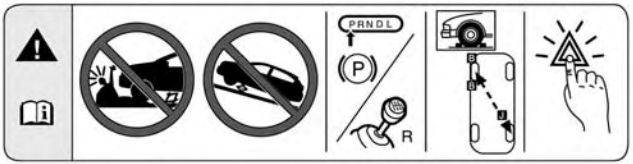

0606052844

Jack Warning Label

CAUTION!

Do not attempt to raise the vehicle by jacking on locations other than those indicated in the Jacking Instructions for this vehicle.

Assembled Jack

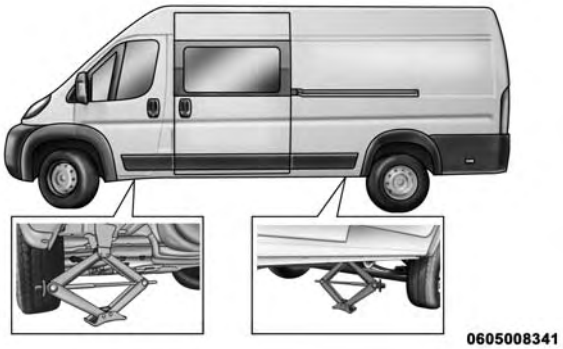

Jacking Engagement Locations

1. Loosen (but do not remove) the wheel lug bolts by turning them to the left one turn while the wheel is still on the ground.
2. There are two jack engagement locations on each side of the vehicle body.

CAUTION!

Do not attempt to raise the vehicle by jacking on locations other than those indicated.

NOTE: The rear jacking location is located in front of the rear tire and in front of the leaf spring mount.

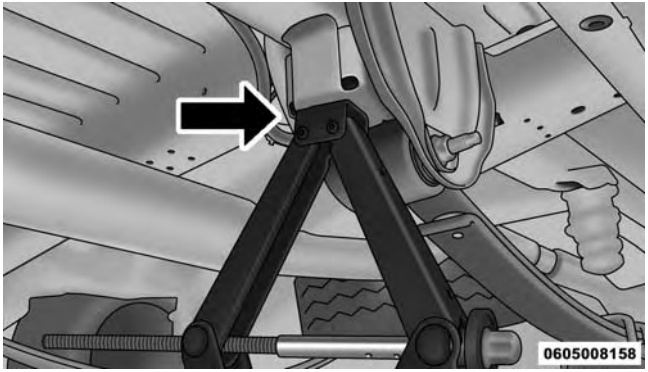

Rear Jacking Location

NOTE: The front jacking location is located behind the front tire and in front of the driver/passenger door.

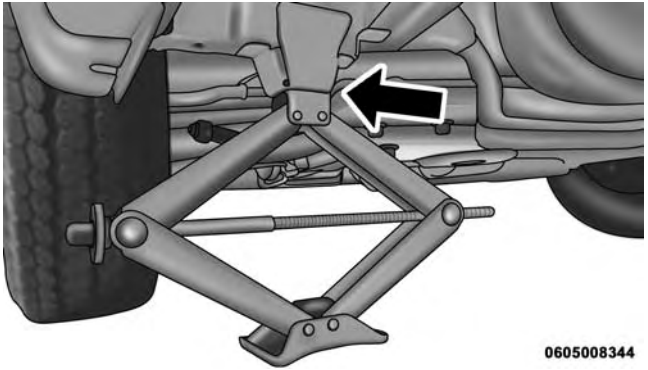

Front Jacking Location

WARNING!

Being under a jacked-up vehicle is dangerous. The vehicle could slip off the jack and fall on you. You could be crushed. Never get any part of your body under a vehicle that is on a jack. If you need to get under a raised vehicle, take it to a service center where it can be raised on a lift.

3. Place the wrench handle and lug bolt adapter on the jack screw and turn to the right until the jack head is properly engaged in the described location. **Do not raise the vehicle until you are sure the jack is securely engaged.**
4. Raise the vehicle by turning the jack screw to the right, using the wrench handle and lug bolt adapter. Raise the vehicle only until the tire just clears the surface and enough clearance is obtained to install the spare tire. Minimum tire lift provides maximum stability.

WARNING!

Raising the vehicle higher than necessary can make the vehicle less stable. It could slip off the jack and hurt someone near it. Raise the vehicle only enough to remove the tire.

5. Remove the wheel lug bolts. For vehicles with wheel covers, remove the cover from the wheel by hand. Do not pry the wheel cover off. Then pull the wheel off the hub.
6. Install the spare tire. Lightly tighten the wheel lug bolts.

CAUTION!

Be sure to mount the spare tire with the valve stem facing outward. The vehicle could be damaged if the spare tire is mounted incorrectly.

Mounting Spare Tire

WARNING!

To avoid the risk of forcing the vehicle off the jack, do not tighten the wheel nuts fully until the vehicle has been lowered. Failure to follow this warning may result in personal injury.

NOTE: Do not install the wheel cover on the spare tire.

7. Lower the vehicle by turning the jack screw to the left.
8. Refer to "Torque Specifications" in this section for proper wheel lug bolt torque.
9. Lower the jack to its fully-closed position.
10. Stow the damaged wheel/spare tire with the cable and wheel spacer before driving the vehicle.

11. Install the winch extension and **rotate the wrench handle clockwise until the winch mechanism indication window turns yellow and the operator hears "3 clicks" from the device to show the wheel is properly stowed under the vehicle.**

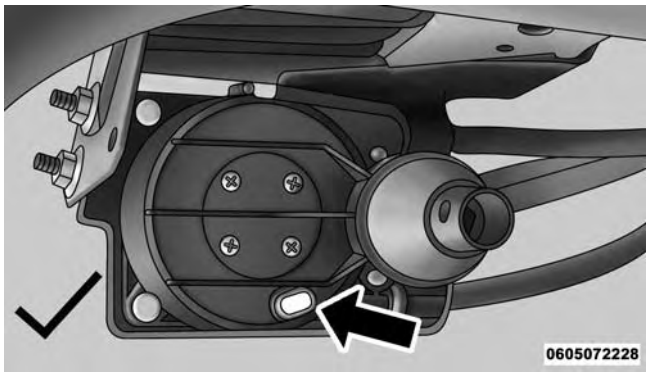

Winch Mechanism Properly Engaged (Yellow DOT Will Appear In The Winch Indication Window)

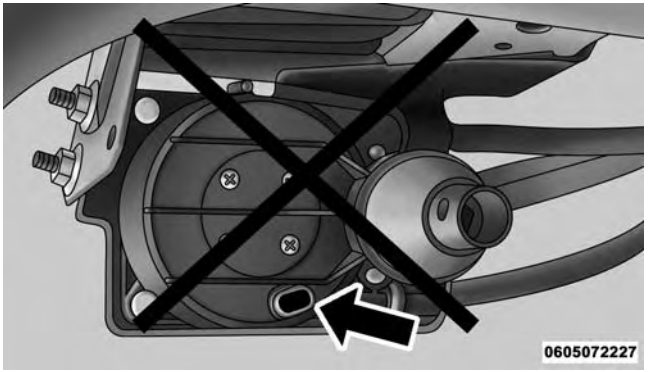

Winch Mechanism NOT Properly Engaged (Black Window Will Appear)

CAUTION!

In the case that the yellow dot does not appear in the winch mechanism window refer to step 11 above, the operator should repeat the spare tire instillation procedure. If the yellow dot does not appear in the winch indication window, place and secure the damaged wheel into the vehicle and seek dealer assistance to the winch mechanism.

12. Stow the jack, jack handle and winch handle tools back in the storage compartment.

WARNING!

A loose tire or jack thrown forward in a collision or hard stop could endanger the occupants of the vehicle. Always stow the jack parts and the spare tire in the places provided. Have the deflated (flat) tire repaired or replaced immediately.

13. Check the spare tire pressure as soon as possible. Correct the tire pressure, as required.

For vehicles with aluminum wheels:

1. Remove the adapter bracket and bolts from the storage bag in the glove compartment.
2. Take the retainer and position it inside the circular bracket.

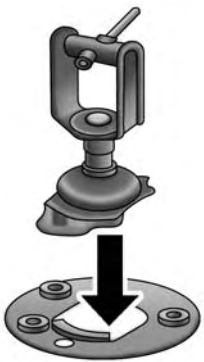

Adapter/Bracket Union

3. Tighten the knob on the bolt to secure it to the bracket.

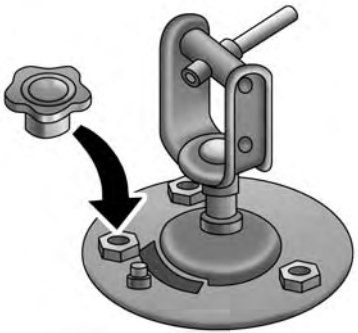

Securing The Bracket

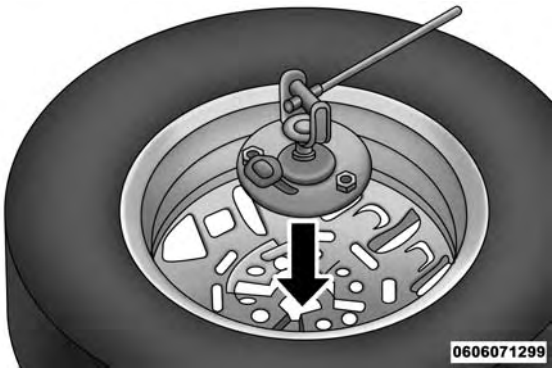

Alloy Wheel Mounting

4. Position the tire vertically and lay the mounted adapter on the inner part of the rim. Using the supplied bolts, fasten the wheel to the adapter using the bolt install wrench. Tighten the bolts with the wrench extension and wrench handle.

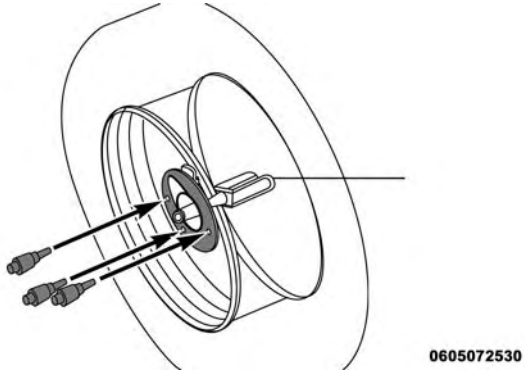

Wheel/Bolts Attaching To Mounting Bracket

5. **Follow the steps above for proper spare tire stowage.**

Wheel Covers

CAUTION!

Use a back-and-forth motion to remove the hub cap. Do not use a twisting motion when removing the hub cap, damage to the hub cap finish may occur.

The wheel covers on the vehicle are held in place by the wheel lug bolts and can be removed after the wheel lug bolts are taken off.

JUMP-STARTING PROCEDURES

If your vehicle has a discharged battery it can be jump-started using a set of jumper cables and a battery in another vehicle or by using a portable battery booster pack. Jump-starting can be dangerous if done improperly so please follow the procedures in this section carefully.

NOTE: When using a portable battery booster pack follow the manufacturer's operating instructions and precautions.

CAUTION!

Do not use a portable battery booster pack or any other booster source with a system voltage greater than 12 Volts or damage to the battery, starter motor, alternator or electrical system may occur.

WARNING!

Do not attempt jump-starting if the battery is frozen. It could rupture or explode and cause personal injury.

Preparations For Jump-Start

The vehicle's jump starting remote posts are located under the hood, in the engine compartment on the driver's side.

The Remote Positive **(+)** Post is covered with a protective cap located on the side of the Front Power Distribution Center.

The Remote Negative **(-)** Post is located on the core support closest to the front of the vehicle.

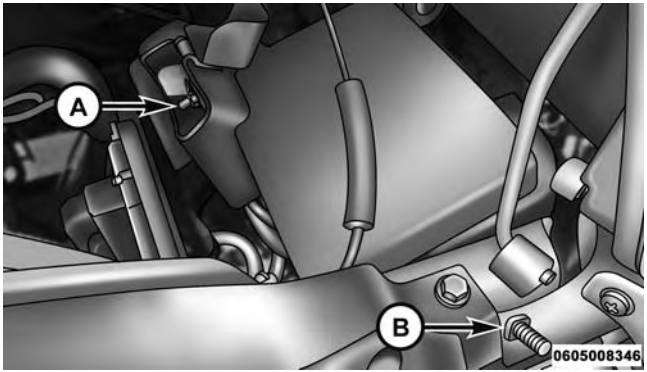

Jump Starting Remote Post Locations

A — Remote Positive **(+)** Post
B — Remote Negative **(-)** Post

WARNING!

- **Take care to avoid the radiator cooling fan whenever the hood is raised. It can start anytime the ignition switch is ON. You can be injured by moving fan blades.**
- **Remove any metal jewelry such as rings, watch bands and bracelets that could make an inadvertent electrical contact. You could be seriously injured.**
- **Batteries contain sulfuric acid that can burn your skin or eyes and generate hydrogen gas which is flammable and explosive. Keep open flames or sparks away from the battery.**

1. Set the parking brake, shift the automatic transmission into PARK and turn the ignition to the OFF position.
2. Turn off the heater, radio, and all unnecessary electrical accessories.
3. If using another vehicle to jump-start the battery, park the vehicle within the jumper cables reach, set the parking brake and make sure the ignition is OFF.

WARNING!

Do not allow vehicles to touch each other as this could establish a ground connection and personal injury could result.

Jump-Starting Procedure

WARNING!

Failure to follow this jump-starting procedure could result in personal injury or property damage due to battery explosion.

CAUTION!

Failure to follow these procedures could result in damage to the charging system of the booster vehicle or the discharged vehicle.

Connecting The Jumper Cables

1. Connect the positive **(+)** end of the jumper cable to the remote positive **(+)** post of the discharged vehicle.

NOTE: The remote positive **(+)** post is located in the engine compartment on the driver's side under the cover of the Front Power Distribution Center.

2. Connect the opposite end of the positive **(+)** jumper cable to the positive **(+)** post of the booster battery.
3. Connect the negative end **(-)** of the jumper cable to the negative **(-)** post of the booster battery.
4. Connect the opposite end of the negative **(-)** jumper cable to the remote negative **(-)** post of the discharged vehicle.

NOTE: The remote negative **(-)** post is located in the front of the engine compartment on the driver's side.

WARNING!

Do not connect the jumper cable to the negative (-) post of the discharged battery. The resulting electrical spark could cause the battery to explode and could result in personal injury. Only use the specific ground point, do not use any other exposed metal parts.

5. Start the engine in the vehicle that has the booster battery. Let the engine idle a few minutes and then start the engine in the vehicle with the discharged battery.

6. Once the engine is started, disconnect the jumper cables in the reverse sequence:

Disconnecting The Jumper Cables

1. Disconnect the negative end **(-)** of the jumper cable from the remote negative **(-)** post of the vehicle with the discharged battery.
2. Disconnect the opposite end of the negative **(-)** jumper cable from the negative **(-)** post of the booster battery.
3. Disconnect the positive end **(+)** of the jumper cable from the positive **(+)** post of the booster battery.
4. Disconnect the opposite end of the positive **(+)** jumper cable from the remote positive **(+)** post of the discharged vehicle.
5. Close the cover of the Front Power Distribution Center.

If frequent jump-starting is required to start your vehicle you should have the battery and charging system inspected at your authorized dealer.

CAUTION!

Accessories plugged into the vehicle power outlets draw power from the vehicle's battery, even when not in use (i.e., cellular phones, etc.). Eventually, if plugged in long enough without engine operation, the vehicle's battery will discharge sufficiently to degrade battery life and/or prevent the engine from starting.

Battery Location

There are two remote jump starting posts under the hood which is the recommended jump start location. If access to the battery is needed, an access panel on the driver's side floor will allow for battery access.

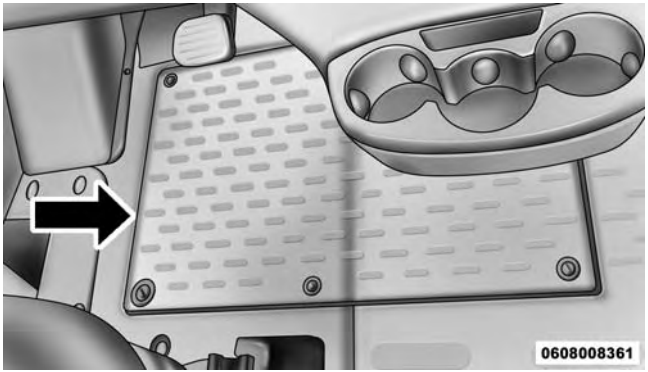

Access Panel

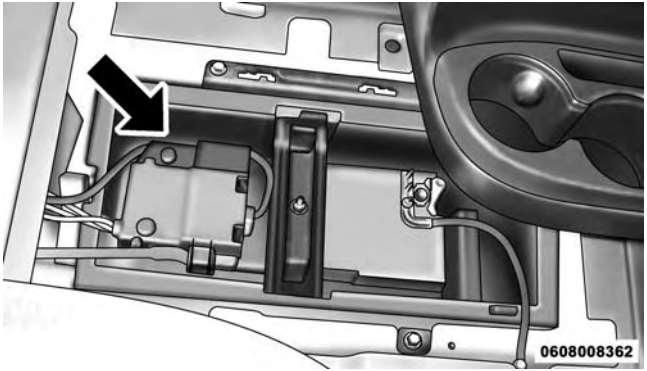

Battery Location

FREEING A STUCK VEHICLE

If your vehicle becomes stuck in mud, sand, or snow, it can often be moved using a rocking motion. Turn the steering wheel right and left to clear the area around the front wheels. Then shift back and forth between DRIVE and REVERSE , while gently pressing the accelerator. Use the least amount of accelerator pedal pressure that will maintain the rocking motion, without spinning the wheels or racing the engine.

CAUTION!

Racing the engine or spinning the wheels may lead to transmission overheating and failure. Allow the engine to idle with the transmission in NEUTRAL for at least one minute after every five rocking-motion cycles. This will minimize overheating and reduce the risk of transmission failure during prolonged efforts to free a stuck vehicle.

NOTE: Push the ″ESC Off″ switch, to place the Electronic Stability Control (ESC) system in ″Partial Off″ mode, before rocking the vehicle. Refer to ‘‘Electronic Brake Control System’’ in ‘‘Starting And Operating’’ for further information. Once the vehicle has been freed, push the ″ESC Off″ switch again to restore ″ESC On″ mode.

CAUTION!

- **When ‘‘rocking’’ a stuck vehicle by shifting between DRIVE and REVERSE, do not spin the wheels faster than 15 mph (24 km/h), or drivetrain damage may result.**
- **Revving the engine or spinning the wheels too fast may lead to transmission overheating and failure. It can also damage the tires. Do not spin the wheels above 30 mph (48 km/h) while in gear (no transmission shifting occurring).**

WARNING!

Fast spinning tires can be dangerous. Forces generated by excessive wheel speeds may cause damage, or even failure, of the axle and tires. A tire could explode and injure someone. Do not spin your vehicle's wheels faster than 30 mph (48 km/h) or for longer than 30 seconds continuously without stopping when you are stuck. And do not let anyone near a spinning wheel, no matter what the speed.

SHIFT LEVER OVERRIDE

If a malfunction occurs and the shift lever cannot be moved out of the PARK position, you can use the following procedure to temporarily move the shift lever:

1. Turn the engine off.
2. Firmly apply the parking brake.
3. Using a small screwdriver or similar tool, remove the shift lever override access cover which is located below the shift lever.
4. Press and maintain firm pressure on the brake pedal.
5. Insert the screwdriver or similar tool into the access port, and push and hold the override release lever forward.
6. Move the shift lever to the NEUTRAL position.
7. The vehicle may then be started in NEUTRAL.
8. Reinstall the shift lever override access cover.

TOWING A DISABLED VEHICLE

This section describes procedures for towing a disabled vehicle using a commercial towing service.

Towing Condition	Wheels OFF the Ground	ALL Models
Flat Tow	NONE	**If transmission is operable:** • Transmission in **NEUTRAL** • 25 mph (40 km/h) **max speed** • 15 miles (24 km) **max distance**
Wheel Lift or Dolly Tow	Rear	
	Front	OK
Flatbed	**ALL**	**BEST METHOD**

Proper towing or lifting equipment is required to prevent damage to your vehicle. Use only tow bars and other equipment designed for this purpose, following equipment manufacturer's instructions. Use of safety chains is mandatory. Attach a tow bar or other towing device to main structural members of the vehicle, not to bumpers or associated brackets. State and local laws regarding vehicles under tow must be observed.

If you must use the accessories (wipers, defrosters, etc.) while being towed, the ignition must be in the ON/RUN position.

If the key fob is unavailable or the vehicle's battery is discharged, see "Shift Lever Override" in this section for instructions on shifting the automatic transmission out of PARK for towing.

CAUTION!

- **Do not use sling type equipment when towing. Vehicle damage may occur.**
- **When securing the vehicle to a flat bed truck, do not attach to front or rear suspension components. Damage to your vehicle may result from improper towing.**

Automatic Transmission

The manufacturer recommends towing your vehicle with all four wheels **OFF** the ground using a flatbed.

If flatbed equipment is not available, and the transmission is operable, this vehicle may be towed (with front wheels on the ground) under the following conditions:

- The transmission must be in NEUTRAL.
- The towing speed must not exceed 25 mph (40 km/h).
- The towing distance must not exceed 15 miles (24 km).

If the transmission is not operable, or the vehicle must be towed faster than 25 mph (40 km/h) or farther than 15 miles (24 km), tow with the front wheels **OFF** the ground (using a flatbed truck, or wheel lift equipment with the front wheels raised).

CAUTION!

- **Towing faster than 25 mph (40 km/h) or farther than 15 miles (24 km) with front wheels on the ground can cause severe transmission damage. Damage from improper towing is not covered under the New Vehicle Limited Warranty.**
- **Towing this vehicle in violation of the above requirements can cause severe transmission damage. Damage from improper towing is not covered under the New Vehicle Limited Warranty.**

MAINTAINING YOUR VEHICLE

CONTENTS

- ENGINE COMPARTMENT — 3.6L 329
- ONBOARD DIAGNOSTIC SYSTEM — OBD II . .330
  - Loose Fuel Filler Cap Message 330
- EMISSIONS INSPECTION AND MAINTENANCE PROGRAMS 331
- REPLACEMENT PARTS 333
- DEALER SERVICE 333
- MAINTENANCE PROCEDURES 333
  - Engine Oil 334
  - Engine Oil Filter 337
  - Engine Air Cleaner Filter 337
  - Exhaust System 338
  - Maintenance-Free Battery 340
  - Air Conditioner Maintenance 341
  - Body Lubrication 344
  - Windshield Wiper Blades 344
  - Cooling System 346
  - Brake System 351
  - Automatic Transmission (3.6L Gasoline Engine Only) 353

- Appearance Care And Protection From Corrosion 355
- Cleaning The Instrument Panel Cupholders . .361

■ FUSES 362
- Underhood Fuses. 363
- Interior Fuses 370
- Right Central Pillar Fuses 374

■ VEHICLE STORAGE 375

■ REPLACEMENT BULBS 376

■ BULB REPLACEMENT 378
- Headlamps Low Beam And High beam 378
- Front Turn Signal/Parking Lamps 379
- Daytime Running Lamp (DRL)/Front Side Marker Lamp 379
- Front Fog Lamps 380
- Front, Rear Roof Lamps 381
- Rear Tail, Stop, Backup, Turn Signal And Rear Side Marker Lamps 381

■ FLUID CAPACITIES 382

■ FLUIDS, LUBRICANTS, AND GENUINE PARTS 383
- Engine 383
- Chassis 385

ENGINE COMPARTMENT — 3.6L

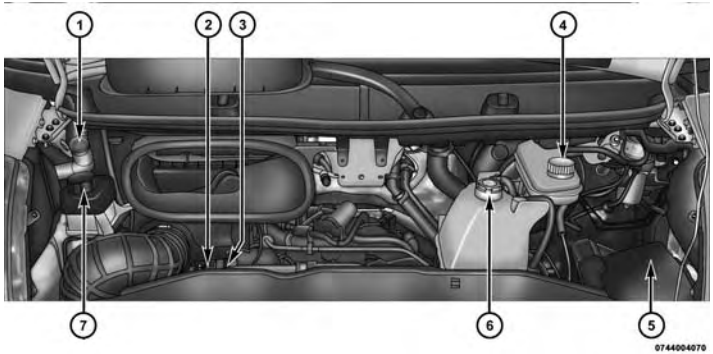

1 — Washer Solvent Reservoir
2 — Engine Oil Fill
3 — Engine Oil Dipstick
4 — Brake Fluid Reservoir
5 — Power Distribution Center (Fuses)
6 — Coolant Reservoir
7 — Power Steering Reservoir

ONBOARD DIAGNOSTIC SYSTEM — OBD II

Your vehicle is equipped with a sophisticated Onboard Diagnostic system called OBD II. This system monitors the performance of the emissions, engine, and automatic transmission control systems. When these systems are operating properly, your vehicle will provide excellent performance and fuel economy, as well as engine emissions well within current government regulations.

If any of these systems require service, the OBD II system will turn on the "Malfunction Indicator Light (MIL)." It will also store diagnostic codes and other information to assist your service technician in making repairs. Although your vehicle will usually be drivable and not need towing, see your authorized dealer for service as soon as possible.

CAUTION!

- **Prolonged driving with the MIL on could cause further damage to the emission control system. It could also affect fuel economy and driveability. The vehicle must be serviced before any emissions tests can be performed.**
- **If the MIL is flashing while the engine is running, severe catalytic converter damage and power loss will soon occur. Immediate service is required.**

Loose Fuel Filler Cap Message

If the vehicle diagnostic system determines that the fuel filler cap is loose, improperly installed, or damaged, a "Check fuel cap" message will be displayed in the Electronic Vehicle Information Center (EVIC). Refer to

"Electronic Vehicle Information Center (EVIC)" in "Understanding Your Instrument Panel" for further information. Tighten the gas cap until a "clicking" sound is heard. This is an indication that the gas cap is properly tightened.

Push the odometer reset button to turn the message off. If the problem persists, the message will appear the next time the vehicle is started. This might indicate a damaged cap. If the problem is detected twice in a row, the system will turn on the MIL. Resolving the problem will turn the MIL light off.

EMISSIONS INSPECTION AND MAINTENANCE PROGRAMS

In some localities, it may be a legal requirement to pass an inspection of your vehicle's emissions control system. Failure to pass could prevent vehicle registration.

For states that require an Inspection and Maintenance (I/M), this check verifies the "Malfunction Indicator Light (MIL)" is functioning and is not on when the engine is running, and that the OBD II system is ready for testing.

Normally, the OBD II system will be ready. The OBD II system may **not** be ready if your vehicle was recently serviced, recently had a dead battery or a battery replacement. If the OBD II system should be determined not ready for the I/M test, your vehicle may fail the test.

Your vehicle has a simple ignition actuated test, which you can use prior to going to the test station. To check if your vehicle's OBD II system is ready, you must do the following:

1. Cycle the ignition switch to the ON position, but do not crank or start the engine.

NOTE: If you crank or start the engine, you will have to start this test over.

2. As soon as you cycle the ignition switch to the ON position, you will see the Malfunction Indicator Light (MIL) symbol come on as part of a normal bulb check.
3. Approximately 15 seconds later, one of two things will happen:

- The MIL will flash for about 10 seconds and then return to being fully illuminated until you turn OFF the ignition or start the engine. This means that your vehicle's OBD II system is **not ready** and you should **not** proceed to the I/M station.
- The MIL will not flash at all and will remain fully illuminated until you place the ignition in the off position or start the engine. This means that your vehicle's OBD II system is **ready** and you can proceed to the I/M station.

If your OBD II system is **not ready,** you should see your authorized dealer or repair facility. If your vehicle was recently serviced or had a battery failure or replacement, you may need to do nothing more than drive your vehicle as you normally would in order for your OBD II system to update. A recheck with the above test routine may then indicate that the system is **now ready**.

Regardless of whether your vehicle's OBD II system is ready or not, if the MIL is illuminated during normal vehicle operation you should have your vehicle serviced

before going to the I/M station. The I/M station can fail your vehicle because the MIL is on with the engine running.

REPLACEMENT PARTS

Use of genuine MOPAR® parts for normal/scheduled maintenance and repairs is highly recommended to ensure the designed performance. Damage or failures caused by the use of non-MOPAR® parts for maintenance and repairs will not be covered by the New Vehicle Limited Warranty.

DEALER SERVICE

Your authorized dealer has the qualified service personnel, special tools, and equipment to perform all service operations in an expert manner. Service Manuals are available which include detailed service information for your vehicle. Refer to these Service Manuals before attempting any procedure yourself.

NOTE: Intentional tampering with emissions control systems may void your warranty and could result in civil penalties being assessed against you.

WARNING!

You can be badly injured working on or around a motor vehicle. Only do service work for which you have the knowledge and the proper equipment. If you have any doubt about your ability to perform a service job, take your vehicle to a competent mechanic.

MAINTENANCE PROCEDURES

The pages that follow contain the **required** maintenance services determined by the engineers who designed your vehicle.

Besides those maintenance items specified in the fixed "Maintenance Schedule", there are other components which may require servicing or replacement in the future.

CAUTION!

- **Failure to properly maintain your vehicle or perform repairs and service when necessary could result in more costly repairs, damage to other components or negatively impact vehicle performance. Immediately have potential malfunctions examined by an authorized dealer or qualified repair center.**
- **Your vehicle has been built with improved fluids that protect the performance and durability of your vehicle and also allow extended maintenance intervals. Do not use chemical flushes in these components as the chemicals can damage your engine,**

(Continued)

CAUTION! ***(Continued)***

transmission, power steering or air conditioning. Such damage is not covered by the New Vehicle Limited Warranty. If a flush is needed because of component malfunction, use only the specified fluid for the flushing procedure.

Engine Oil

Checking Oil Level

To assure proper engine lubrication, the engine oil must be maintained at the correct level. Check the oil level at regular intervals, such as every fuel stop. The best time to check the engine oil level is about five minutes after a fully warmed engine is shut OFF.

Checking the oil while the vehicle is on level ground will improve the accuracy of the oil level readings. Maintain the oil level between the MIN and MAX markings on the

dipstick. Adding one quart of oil when the reading is at the MIN mark will result in a MAX reading on these engines.

CAUTION!

Overfilling or underfilling will cause oil aeration, or loss of oil pressure. This could damage your engine.

Change Engine Oil

The oil change indicator system will remind you that it is time to take your vehicle in for scheduled maintenance. Refer to the "Maintenance Schedule" for further information.

NOTE: Under no circumstances should oil change intervals exceed 10,000 miles (16,000 km) or twelve months, whichever occurs first.

Engine Oil Selection

For best performance and maximum protection under all types of operating conditions, the manufacturer only recommends engine oils that are API Certified and meet the requirements of FCA US Material Standard MS-6395.

American Petroleum Institute (API) Engine Oil Identification Symbol

This symbol means that the oil has been certified by the American Petroleum Institute (API). The manufacturer only recommends API Certified engine oils.

CAUTION!

Do not use chemical flushes in your engine oil as the chemicals can damage your engine. Such damage is not covered by the New Vehicle Limited Warranty.

Engine Oil Viscosity — 3.6L Engine

MOPAR® SAE 5W-20 engine oil approved to FCA US Material Standard MS-6395 such as Pennzoil®, Shell Helix® or equivalent is recommended for all operating temperatures. This engine oil improves low temperature starting and vehicle fuel economy.

The engine oil filler cap also shows the recommended engine oil viscosity for your engine. For information on engine oil filler cap location, refer to the "Engine Compartment" illustration in this section.

NOTE: MOPAR® SAE 5W-30 engine oil approved to FCA US Material Standard MS-6395 such as Pennzoil®, Shell Helix® or equivalent may be used when SAE 5W-20 engine oil meeting MS-6395 is not available.

Synthetic Engine Oils

You may use synthetic engine oils provided the recommended oil quality requirements are met, and the recommended maintenance intervals for oil and filter changes are followed.

Materials Added To Engine Oil

The manufacturer strongly recommends against the addition of any additives (other than leak detection dyes) to the engine oil. Engine oil is an engineered product and its performance may be impaired by supplemental additives.

Disposing Of Used Engine Oil And Oil Filters

Care should be taken in disposing of used engine oil and oil filters from your vehicle. Used oil and oil filters, indiscriminately discarded, can present a problem to the environment. Contact your authorized dealer, service station or governmental agency for advice on how and where used oil and oil filters can be safely discarded in your area.

Engine Oil Filter

The engine oil filter should be replaced with a new filter at every engine oil change.

Engine Oil Filter Selection

This manufacturer's engines have a full-flow type oil filter. Use a filter of this type for replacement. The quality of replacement filters varies considerably. Only high quality filters should be used to assure most efficient service. MOPAR® engine oil filters are a high quality oil filter and are recommended.

Engine Air Cleaner Filter

Refer to the "Maintenance Schedule" for the proper maintenance intervals.

WARNING!

The air induction system (air cleaner, hoses, etc.) can provide a measure of protection in the case of engine backfire. Do not remove the air induction system (air cleaner, hoses, etc.) unless such removal is necessary for repair or maintenance. Make sure that no one is near the engine compartment before starting the vehicle with the air induction system (air cleaner, hoses, etc.) removed. Failure to do so can result in serious personal injury.

Engine Air Cleaner Filter Selection

The quality of replacement engine air cleaner filters varies considerably. Only high quality filters should be used to assure most efficient service. MOPAR® engine air cleaner filters are a high quality filter and are recommended.

Exhaust System

The best protection against carbon monoxide entry into the vehicle body is a properly maintained engine exhaust system.

If you notice a change in the sound of the exhaust system; or if the exhaust fumes can be detected inside the vehicle; or when the underside or rear of the vehicle is damaged; have an authorized technician inspect the complete exhaust system and adjacent body areas for broken, damaged, deteriorated, or mispositioned parts. Open seams or loose connections could permit exhaust fumes to seep into the passenger compartment. In addition, have the exhaust system inspected each time the vehicle is raised for lubrication or oil change. Replace as required.

WARNING!

- **Exhaust gases can injure or kill. They contain carbon monoxide (CO), which is colorless and odorless. Breathing it can make you unconscious and can eventually poison you. To avoid breathing CO, refer to "Safety Tips/Exhaust Gas" in "Things To Know Before Starting Your Vehicle" for further information.**
- **A hot exhaust system can start a fire if you park over materials that can burn. Such materials might be grass or leaves coming into contact with your exhaust system. Do not park or operate your vehicle in areas where your exhaust system can contact anything that can burn.**

CAUTION!

- **The catalytic converter requires the use of unleaded fuel only. Leaded gasoline will destroy the effectiveness of the catalyst as an emissions control device and may seriously reduce engine performance and cause serious damage to the engine.**
- **Damage to the catalytic converter can result if your vehicle is not kept in proper operating condition. In the event of engine malfunction, particularly involving engine misfire or other apparent loss of performance, have your vehicle serviced promptly. Continued operation of your vehicle with a severe malfunction could cause the converter to overheat, resulting in possible damage to the converter and vehicle.**

Under normal operating conditions, the catalytic converter will not require maintenance. However, it is important to keep the engine properly tuned to assure proper catalyst operation and prevent possible catalyst damage.

NOTE: Intentional tampering with emissions control systems can result in civil penalties being assessed against you.

In unusual situations involving grossly malfunctioning engine operation, a scorching odor may suggest severe and abnormal catalyst overheating. If this occurs, stop the vehicle, turn off the engine and allow it to cool. Service, including a tune-up to manufacturer's specifications, should be obtained immediately.

To minimize the possibility of catalytic converter damage:

- Do not shut off the engine or interrupt the ignition, when the transmission is in gear and the vehicle is in motion.
- Do not try to start the engine by pushing or towing the vehicle.
- Do not idle the engine with any spark plug wires disconnected or removed, such as when diagnostic testing, or for prolonged periods during very rough idle or malfunctioning operating conditions.

Maintenance-Free Battery

Your vehicle is equipped with a maintenance-free battery. You will never have to add water, nor is periodic maintenance required.

WARNING!

- **Battery fluid is a corrosive acid solution and can burn or even blind you. Do not allow battery fluid to contact your eyes, skin, or clothing. Do not lean over a battery when attaching clamps. If acid splashes in eyes or on skin, flush the area immediately with large amounts of water. Refer to "Jump-Starting Procedures" in "What To Do In Emergencies" for further information.**
- **Battery gas is flammable and explosive. Keep flame or sparks away from the battery. Do not use a booster battery or any other booster source with an output greater than 12 Volts. Do not allow cable clamps to touch each other.**
- **Battery posts, terminals, and related accessories contain lead and lead compounds. Wash hands after handling.**

CAUTION!

- **It is essential when replacing the cables on the battery that the positive cable is attached to the positive post and the negative cable is attached to the negative post. Battery posts are marked positive (+) and negative (-) and are identified on the battery case. Cable clamps should be tight on the terminal posts and free of corrosion.**
- **If a "fast charger" is used while the battery is in the vehicle, disconnect both vehicle battery cables before connecting the charger to the battery. Do not use a "fast charger" to provide starting voltage.**

Air Conditioner Maintenance

For best possible performance, your air conditioner should be checked and serviced by an authorized dealer at the start of each warm season. This service should include cleaning of the condenser fins and a performance test. Drive belt tension should also be checked at this time.

WARNING!

- **Use only refrigerants and compressor lubricants approved by the manufacturer for your air conditioning system. Some unapproved refrigerants are flammable and can explode, injuring you. Other unapproved refrigerants or lubricants can cause the system to fail, requiring costly repairs. Refer to Warranty Information Book, located on the DVD, for further warranty information.**
- **The air conditioning system contains refrigerant under high pressure. To avoid risk of personal injury or damage to the system, adding refrigerant or any repair requiring lines to be disconnected should be done by an experienced technician.**

CAUTION!

Do not use chemical flushes in your air conditioning system as the chemicals can damage your air conditioning components. Such damage is not covered by the New Vehicle Limited Warranty.

Refrigerant Recovery And Recycling

R-134a Air Conditioning Refrigerant is a hydrofluorocarbon (HFC) that is endorsed by the Environmental Protection Agency and is an ozone-saving product. However, the manufacturer recommends that air conditioning service be performed by authorized dealer or other service facilities using recovery and recycling equipment.

NOTE: Use only manufacturer approved A/C system PAG compressor oil and refrigerants.

A/C Air Filter

Refer to the "Maintenance Schedule" for the proper maintenance intervals.

WARNING!

Do not remove the A/C air filter while the blower is operating or personal injury may result.

The A/C air filter is located in the fresh air inlet in the engine compartment. Perform the following procedure to replace the filter:

1. Remove the two screws that secure the filter retainer to the fresh air inlet, and remove the filter retainer.

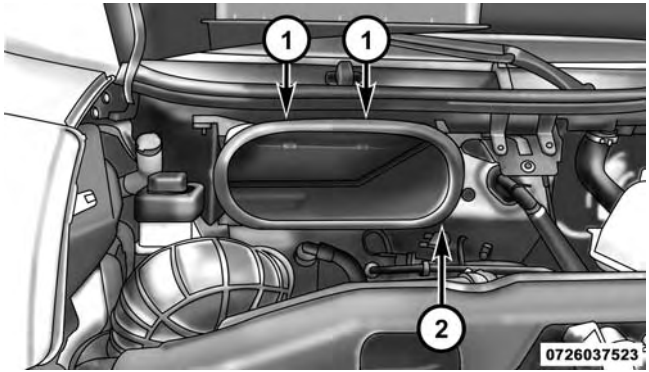

Accessing Air Filter

1 — Screw Locations
2 — Fresh Air Inlet

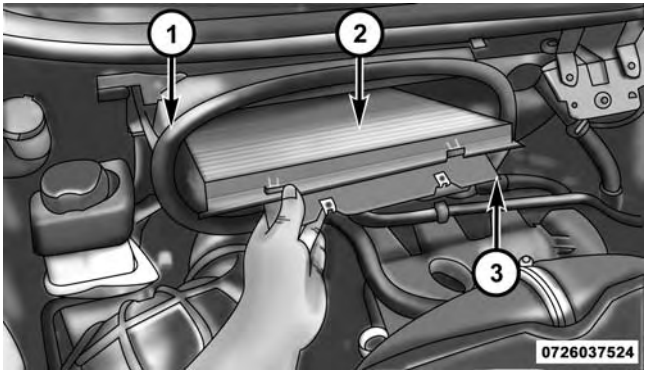

Removing Air Filer

1 — Fresh Air Inlet
2 — A/C Air Filter
3 — A/C Air Filter Retainer

2. Remove and replace the A/C air filter from the filter retainer.

3. Install the A/C air filter/filter retainer back into the fresh air inlet. When installing the filter retainer make sure the retainer is fully engaged.
4. Install the two screws back into the assembly to secure the filter retainer to the fresh air inlet.

Body Lubrication

Locks and all body pivot points, including such items as seat tracks, door hinge pivot points and rollers, liftgate, tailgate, decklid, sliding doors and hood hinges, should be lubricated periodically with a lithium based grease, such as MOPAR® Spray White Lube to assure quiet, easy operation and to protect against rust and wear. Prior to the application of any lubricant, the parts concerned should be wiped clean to remove dust and grit; after lubricating excess oil and grease should be removed. Particular attention should also be given to hood latching components to ensure proper function. When performing other underhood services, the hood latch, release mechanism and safety catch should be cleaned and lubricated.

The external lock cylinders should be lubricated twice a year, preferably in the Fall and Spring. Apply a small amount of a high quality lubricant, such as MOPAR® Lock Cylinder Lubricant directly into the lock cylinder.

Windshield Wiper Blades

Clean the rubber edges of the wiper blades and the windshield periodically with a sponge or soft cloth and a mild nonabrasive cleaner. This will remove accumulations of salt or road film.

Operation of the wipers on dry glass for long periods may cause deterioration of the wiper blades. Always use washer fluid when using the wipers to remove salt or dirt from a dry windshield.

Avoid using the wiper blades to remove frost or ice from the windshield. Keep the blade rubber out of contact with petroleum products such as engine oil, gasoline, etc.

NOTE: Life expectancy of wiper blades varies depending on geographical area and frequency of use. Poor performance of blades may be present with chattering, marks, water lines or wet spots. If any of these conditions are present, clean the wiper blades or replace as necessary.

Adding Washer Fluid

The fluid reservoir is located in the engine compartment and should be checked at regular intervals. Fill the reservoir with windshield washer solvent (not radiator antifreeze) and operate the system for a few seconds to flush out any residual water.

The washer fluid reservoir will hold a full gallon of fluid when the Low Washer Fluid Light illuminates.

WARNING!

Commercially available windshield washer solvents are flammable. They could ignite and burn you. Care must be exercised when filling or working around the washer solution.

After the engine has warmed, operate the defroster for a few minutes to reduce the possibility of smearing or freezing the fluid on the cold windshield. MOPAR® All Weather Windshield Washer Solution or equivalent, used with water as directed on the container, aids cleaning action, reduces the freezing point to avoid line clogging, and is not harmful to paint or trim.

Cooling System

WARNING!

- **When working near the radiator cooling fan, disconnect the fan motor lead or turn the ignition switch to the OFF position. The fan is temperature controlled and can start at anytime the ignition switch is in the ON position.**
- **You or others can be badly burned by hot engine coolant (antifreeze) or steam from your radiator. If you see or hear steam coming from under the hood, do not open the hood until the radiator has had time to cool. Never try to open a cooling system pressure cap when the radiator is hot.**

Coolant Checks

Check the engine coolant (antifreeze) protection every 12 months (before the onset of freezing weather, where applicable). If the engine coolant (antifreeze) is dirty, the system should be drained, flushed, and refilled with fresh OAT coolant (conforming to MS-12106) only by an authorized dealer. Check the front of the A/C condenser for any accumulation of bugs, leaves, etc. If dirty, clean by gently spraying water from a garden hose vertically down the face of the condenser.

Cooling System — Drain, Flush And Refill

NOTE: Some vehicles require special tools to add coolant properly. Failure to fill these systems properly could lead to severe internal engine damage. If any coolant is needed to be added to the system please contact your local authorized dealer.

If the engine coolant (antifreeze) is dirty or contains visible sediment, have an authorized dealer clean and flush with OAT coolant (antifreeze) (conforming to MS.90032).

Refer to the "Maintenance Schedule" for the proper maintenance intervals.

Selection Of Coolant

Refer to "Fluids, Lubricants, And Genuine Parts" in "Maintaining Your Vehicle" for further information.

CAUTION!

- **Mixing of engine coolant (antifreeze) other than specified Organic Additive Technology (OAT) engine coolant (antifreeze), may result in engine damage and may decrease corrosion protection. Organic Additive Technology (OAT) engine coolant is different and should not be mixed with Hybrid Organic Additive Technology (HOAT) engine coolant (antifreeze) or any "globally compatible" coolant (antifreeze). If a non-OAT engine**

(Continued)

CAUTION! ***(Continued)***

coolant (antifreeze) is introduced into the cooling system in an emergency, the cooling system will need to be drained, flushed, and refilled with fresh OAT coolant (conforming to MS.90032), by an authorized dealer as soon as possible.

- **Do not use water alone or alcohol-based engine coolant (antifreeze) products. Do not use additional rust inhibitors or antirust products, as they may not be compatible with the radiator engine coolant and may plug the radiator.**
- **This vehicle has not been designed for use with propylene glycol-based engine coolant (antifreeze). Use of propylene glycol-based engine coolant (antifreeze) is not recommended.**

Adding Coolant

Your vehicle has been built with an improved engine coolant (OAT coolant conforming to MS.90032) that allows extended maintenance intervals. This engine coolant (antifreeze) can be used up to ten years or 150,000 miles (240,000 km) before replacement. To prevent reducing this extended maintenance period, it is important that you use the same engine coolant (OAT coolant conforming to MS.90032) throughout the life of your vehicle.

Please review these recommendations for using Organic Additive Technology (OAT) engine coolant (antifreeze) that meets the requirements of FCA Material Standard MS.90032. When adding engine coolant (antifreeze):

- We recommend using MOPAR® Antifreeze/Coolant 10 Year/150,000 Mile Formula OAT (Organic Additive Technology) that meets the requirements of FCA Material Standard MS.90032.
- Mix a minimum solution of 50% OAT engine coolant that meets the requirements of FCA Material Standard MS.90032 and distilled water. Use higher concentrations (not to exceed 70%) if temperatures below −34° F (−37° C) are anticipated.
- Use only high purity water such as distilled or deionized water when mixing the water/engine coolant (antifreeze) solution. The use of lower quality water will reduce the amount of corrosion protection in the engine cooling system.

Please note that it is the owner's responsibility to maintain the proper level of protection against freezing according to the temperatures occurring in the area where the vehicle is operated.

NOTE:

- Some vehicles require special tools to add coolant properly. Failure to fill these systems properly could lead to severe internal engine damage. If any coolant is needed to be added to the system please contact your local authorized dealer.
- Mixing engine coolant (antifreeze) types is not recommended and can result in cooling system damage. If HOAT and OAT coolant are mixed in an emergency, have a authorized dealer drain, flush, and refill with OAT coolant (conforming to MS.90032) as soon as possible.

Cooling System Pressure Cap

The cap must be fully tightened to prevent loss of engine coolant (antifreeze), and to ensure that engine coolant (antifreeze) will return to the radiator from the coolant recovery tank.

The cap should be inspected and cleaned if there is any accumulation of foreign material on the sealing surfaces.

WARNING!

- **Do not open hot engine cooling system. Never add engine coolant (antifreeze) when the engine is overheated. Do not loosen or remove the cap to cool an overheated engine. Heat causes pressure to build up in the cooling system. To prevent scalding or injury, do not remove the pressure cap while the system is hot or under pressure.**
- **Do not use a pressure cap other than the one specified for your vehicle. Personal injury or engine damage may result.**

Disposal Of Used Engine Coolant

Used ethylene glycol-based engine coolant (antifreeze) is a regulated substance requiring proper disposal. Check with your local authorities to determine the disposal rules for your community. To prevent ingestion by animals or children, do not store ethylene glycol-based engine coolant in open containers or allow it to remain in puddles on the ground. If ingested by a child or pet, seek emergency assistance immediately. Clean up any ground spills immediately.

Coolant Level

The coolant expansion bottle provides a quick visual method for determining that the coolant level is adequate. With engine off and cold, the level of the engine coolant (antifreeze) in the bottle should be between the "MIN" and "MAX" marks.

Points To Remember

NOTE: When the vehicle is stopped after a few miles/kilometers of operation, you may observe vapor coming from the front of the engine compartment. This is normally a result of moisture from rain, snow, or high humidity accumulating on the radiator and being vaporized when the thermostat opens, allowing hot engine coolant (antifreeze) to enter the radiator.

If an examination of your engine compartment shows no evidence of radiator or hose leaks, the vehicle may be safely driven. The vapor will soon dissipate.

- Do not overfill the coolant expansion bottle.
- Check the coolant freeze point in the radiator and in the coolant expansion bottle. If engine coolant (antifreeze) needs to be added, the contents of the coolant expansion bottle must also be protected against freezing.

- If frequent engine coolant (antifreeze) additions are required, the cooling system should be pressure tested for leaks.
- Maintain engine coolant (antifreeze) concentration at a minimum of 50% OAT coolant (conforming to MS.90032) and distilled water for proper corrosion protection of your engine which contains aluminum components.
- Make sure that the coolant expansion bottle overflow hoses are not kinked or obstructed.
- Keep the front of the radiator clean. If your vehicle is equipped with air conditioning, keep the front of the condenser clean.
- Do not change the thermostat for Summer or Winter operation. If replacement is ever necessary, install ONLY the correct type thermostat. Other designs may result in unsatisfactory engine coolant (antifreeze) performance, poor gas mileage, and increased emissions.

Brake System

In order to assure brake system performance, all brake system components should be inspected periodically. Refer to the "Maintenance Schedule" for the proper maintenance intervals.

WARNING!

Riding the brakes can lead to brake failure and possibly a collision. Driving with your foot resting or riding on the brake pedal can result in abnormally high brake temperatures, excessive lining wear, and possible brake damage. You would not have your full braking capacity in an emergency.

Master Cylinder — Brake Fluid Level Check

The fluid level in the master cylinder should be checked when performing underhood services, or immediately if the "Brake System Warning Light" indicates system failure.

Clean the top of the master cylinder area before removing the cap. Add fluid to bring the level up to the top of the "FULL" mark on the side of the master cylinder reservoir.

Overfilling of fluid is not recommended because it may cause leaking in the system.

Add enough fluid to bring the level up to the requirements described on the brake fluid reservoir. With disc brakes, fluid level can be expected to fall as the brake pads wear. However, low fluid level may be caused by a leak and a checkup may be needed.

Use only manufacturer's recommended brake fluid. Refer to "Fluids, Lubricants, And Genuine Parts" in "Maintaining Your Vehicle" for further information.

WARNING!

- **Use only manufacturer's recommended brake fluid. Refer to "Fluids, Lubricants, And Genuine Parts" in "Maintaining Your Vehicle" for further information. Using the wrong type of brake fluid can severely damage your brake system and/or impair its performance. The proper type of brake fluid for your vehicle is also identified on the original factory installed hydraulic master cylinder reservoir.**
- **To avoid contamination from foreign matter or moisture, use only new brake fluid or fluid that has been in a tightly closed container. Keep the master**

(Continued)

WARNING! *(Continued)*

cylinder reservoir cap secured at all times. Brake fluid in a open container absorbs moisture from the air resulting in a lower boiling point. This may cause it to boil unexpectedly during hard or prolonged braking, resulting in sudden brake failure. This could result in a collision.

- **Overfilling the brake fluid reservoir can result in spilling brake fluid on hot engine parts, causing the brake fluid to catch fire. Brake fluid can also damage painted and vinyl surfaces, care should be taken to avoid its contact with these surfaces.**
- **Do not allow petroleum based fluid to contaminate the brake fluid. Brake seal components could be damaged, causing partial or complete brake failure. This could result in a collision.**

Automatic Transmission (3.6L Gasoline Engine Only)

Selection Of Lubricant

It is important to use the proper transmission fluid to ensure optimum transmission performance and life. Use only the manufacturer's specified transmission fluid. Refer to "Fluids, Lubricants, And Genuine Parts" in this section for fluid specifications. It is important to maintain the transmission fluid at the correct level using the recommended fluid. No chemical flushes should be used in any transmission; only the approved lubricant should be used.

CAUTION!

Using a transmission fluid other than the manufacturer's recommended fluid may cause deterioration

(Continued)

CAUTION! *(Continued)*

in transmission shift quality and/or torque converter shudder, and will require more frequent fluid and filter changes. Refer to "Fluids, Lubricants, And Genuine Parts" in this section for fluid specifications.

Special Additives

The manufacturer strongly recommends against using any special additives in the transmission.

Automatic Transmission Fluid (ATF) is an engineered product and its performance may be impaired by supplemental additives. Therefore, do not add any fluid additives to the transmission. The only exception to this policy is the use of special dyes for diagnosing fluid leaks. Avoid using transmission sealers as they may adversely affect seals.

CAUTION!

Do not use chemical flushes in your transmission as the chemicals can damage your transmission components. Such damage is not covered by the New Vehicle Limited Warranty.

Fluid Level Check

The fluid level is preset at the factory and does not require adjustment under normal operating conditions. Routine fluid level checks are not required, therefore the transmission filler tube is capped and no dipstick is provided. Your authorized dealer can check your transmission fluid level using a special service dipstick. If you notice fluid leakage or transmission malfunction, visit your authorized dealer immediately to have the transmission fluid level checked. Operating the vehicle with an improper fluid level can cause severe transmission damage.

CAUTION!

If a transmission fluid leak occurs, visit your authorized dealer immediately. Severe transmission damage may occur. Your authorized dealer has the proper tools to adjust the fluid level accurately.

Fluid And Filter Changes

Refer to the "Maintenance Schedule" for the proper maintenance intervals.

In addition, change the fluid and filter if the fluid becomes contaminated (with water, etc.), or if the transmission is disassembled for any reason.

Appearance Care And Protection From Corrosion

Protection Of Body And Paint From Corrosion

Vehicle body care requirements vary according to geographic locations and usage. Chemicals that make roads passable in snow and ice and those that are sprayed on trees and road surfaces during other seasons are highly corrosive to the metal in your vehicle. Outside parking, which exposes your vehicle to airborne contaminants, road surfaces on which the vehicle is operated, extreme hot or cold weather and other extreme conditions will have an adverse effect on paint, metal trim, and underbody protection.

The following maintenance recommendations will enable you to obtain maximum benefit from the corrosion resistance built into your vehicle.

What Causes Corrosion?

Corrosion is the result of deterioration or removal of paint and protective coatings from your vehicle.

The most common causes are:

- Road salt, dirt and moisture accumulation.
- Stone and gravel impact.

- Insects, tree sap and tar.
- Salt in the air near seacoast localities.
- Atmospheric fallout/industrial pollutants.

Washing

- Wash your vehicle regularly. Always wash your vehicle in the shade using MOPAR® Car Wash, or a mild car wash soap, and rinse the panels completely with clear water.
- If insects, tar, or other similar deposits have accumulated on your vehicle, use MOPAR® Super Kleen Bug and Tar Remover to remove.
- Use a high quality cleaner wax, such as MOPAR® Cleaner Wax to remove road film, stains and to protect your paint finish. Take care never to scratch the paint.
- Avoid using abrasive compounds and power buffing that may diminish the gloss or thin out the paint finish.

CAUTION!

- **Do not use abrasive or strong cleaning materials such as steel wool or scouring powder that will scratch metal and painted surfaces.**
- **Use of power washers exceeding 1,200 psi (8 274 kPa) can result in damage or removal of paint and decals.**

Special Care

- If you drive on salted or dusty roads or if you drive near the ocean, hose off the undercarriage at least once a month.
- It is important that the drain holes in the lower edges of the doors, rocker panels, and trunk be kept clear and open.

- If you detect any stone chips or scratches in the paint, touch them up immediately. The cost of such repairs is considered the responsibility of the owner.
- If your vehicle is damaged due to a collision or similar cause that destroys the paint and protective coating, have your vehicle repaired as soon as possible. The cost of such repairs is considered the responsibility of the owner.
- If you carry special cargo such as chemicals, fertilizers, de-icer salt, etc., be sure that such materials are well packaged and sealed.
- If a lot of driving is done on gravel roads, consider mud or stone shields behind each wheel.
- Use MOPAR® Touch Up Paint on scratches as soon as possible. Your authorized dealer has touch up paint to match the color of your vehicle.

Wheel And Wheel Trim Care

All wheels and wheel trim, especially aluminum and chrome plated wheels, should be cleaned regularly with a mild soap and water to prevent corrosion.

To remove heavy soil and/or excessive brake dust, use MOPAR® Wheel Cleaner or equivalent or select a non-abrasive, non-acidic cleaner.

- For chrome wheels, use MOPAR® Chrome Cleaner or equivalent.
- For aluminum wheels, use MOPAR® Wheel Cleaner or equivalent.

CAUTION!

Do not use scouring pads, steel wool, a bristle brush, or metal polishes. Do not use oven cleaner. These products may damage the wheel's protective finish. Avoid automatic car washes that use acidic solutions or harsh brushes that may damage the wheel's protective finish. Only MOPAR® Wheel Cleaner or equivalent is recommended.

Stain Repel Fabric Cleaning Procedure — If Equipped

Stain Repel seats may be cleaned in the following manner:

- Remove as much of the stain as possible by blotting with a clean, dry towel.
- Blot any remaining stain with a clean, damp towel.
- For tough stains, apply MOPAR® Total Clean, or a mild soap solution to a clean, damp cloth and remove stain. Use a fresh, damp towel to remove soap residue.
- For grease stains, apply MOPAR® Multi-Purpose Cleaner to a clean, damp cloth and remove stain. Use a fresh, damp towel to remove soap residue.
- Do not use any harsh solvents or any other form of protectants on Stain Repel products.

Interior Care

Instrument Panel Surfaces

The instrument panel cover has a low glare surface, which minimizes reflections in the windshield. Do not use protectants or other products which may cause undesirable reflections. Use soap and warm water to restore the low glare surface.

Cleaning Interior Trim

Interior trim should be cleaned starting with a damp cloth, a damp cloth with MOPAR® Total Clean or equivalent, then MOPAR® Spot & Stain Remover or equivalent if absolutely necessary. Do not use harsh cleaners or Armor All®. Use MOPAR® Total Clean or equivalent to clean vinyl upholstery.

Cleaning Leather Upholstery

MOPAR® Total Clean or equivalent is specifically recommended for leather upholstery.

Your leather upholstery can be best preserved by regular cleaning with a damp soft cloth. Small particles of dirt can act as an abrasive and damage the leather upholstery and should be removed promptly with a damp cloth. Stubborn soils can be removed easily with a soft cloth and MOPAR® Total Clean or equivalent. Care should be taken to avoid soaking your leather upholstery with any liquid. Please do not use polishes, oils, cleaning fluids, solvents, detergents, or ammonia-based cleaners to clean your leather upholstery. Application of a leather conditioner is not required to maintain the original condition.

CAUTION!

- **Do not use volatile solvents for cleaning purposes. Many are potentially flammable, and if used in closed areas they may cause respiratory harm.**
- **Do not use power washers to clean the inside of the vehicle, plastic parts can be permanently damaged and the amount of water can cause problems with the electrical components of your vehicle.**

Cleaning Headlights

Your vehicle is equipped with plastic headlights and fog lights that are lighter and less susceptible to stone breakage than glass headlights.

Plastic is not as scratch resistant as glass and therefore different lens cleaning procedures must be followed.

To minimize the possibility of scratching the lenses and reducing light output, avoid wiping with a dry cloth. To remove road dirt, wash with a mild soap solution followed by rinsing.

Do not use abrasive cleaning components, solvents, steel wool or other aggressive material to clean the lenses.

Glass Surfaces

All glass surfaces should be cleaned on a regular basis with MOPAR® Glass Cleaner, or any commercial household-type glass cleaner. Never use an abrasive type cleaner. Use caution when cleaning the inside rear window equipped with electric defrosters or windows equipped with radio antennas. Do not use scrapers or other sharp instrument that may scratch the elements.

When cleaning the rear view mirror, spray cleaner on the towel or cloth that you are using. Do not spray cleaner directly on the mirror.

Cleaning Plastic Instrument Cluster Lenses

The lenses in front of the instruments in this vehicle are molded in clear plastic. When cleaning the lenses, care must be taken to avoid scratching the plastic.

1. Clean with a wet soft cloth. A mild soap solution may be used, but do not use high alcohol content or abrasive cleaners. If soap is used, wipe clean with a clean damp cloth.
2. Dry with a soft cloth.

Seat Belt Maintenance

Do not bleach, dye, or clean the belts with chemical solvents or abrasive cleaners. This will weaken the fabric. Sun damage can also weaken the fabric.

If the belts need cleaning, use MOPAR® Total Clean, a mild soap solution, or lukewarm water. Do not remove the belts from the vehicle to wash them. Dry with a soft cloth.

Replace the belts if they appear frayed or worn or if the buckles do not work properly.

WARNING!

A frayed or torn belt could rip apart in a collision and leave you with no protection. Inspect the belt system periodically, checking for cuts, frays, or loose parts. Damaged parts must be replaced immediately. Do not disassemble or modify the system. Seat belt assemblies must be replaced after a collision if they have been damaged (i.e., bent retractor, torn webbing, etc.).

Cleaning The Instrument Panel Cupholders

Removal

Pull the flexible liner from the cupholder drawer starting at one edge to ease removal.

Cleaning

The liner is top shelf dishwasher safe, or you may follow the cleaning procedure below.

Soak the liner in a mixture of medium hot tap water and one teaspoon of mild liquid dish soap. Let soak for approximately 30 minutes. After 30 minutes, pull the liner from the water and dip it back into the water about six times. This will loosen any remaining debris. Rinse the liner thoroughly under warm running water. Shake the excess water from the liner and dry the outer surfaces with a clean soft cloth.

Installation

Place the liner into the cupholder drawer and push the liner into place so that the retention tabs seat into the corresponding openings in the drawer.

FUSES

WARNING!

- **When replacing a blown fuse, always use an appropriate replacement fuse with the same amp rating as the original fuse. Never replace a fuse with another fuse of higher amp rating. Never replace a blown fuse with metal wires or any other material. Failure to use proper fuses may result in serious personal injury, fire and/or property damage.**

(Continued)

WARNING! ***(Continued)***

- **Before replacing a fuse, make sure that the ignition is off and that all the other services are switched off and/or disengaged.**
- **If the replaced fuse blows again, contact an authorized dealer.**
- **If a general protection fuse for safety systems (air bag system, braking system), power unit systems (engine system, gearbox system) or steering system blows, contact an authorized dealer.**

Underhood Fuses

The Front Power Distribution Center is located on the driver's side of the engine compartment. To access the fuses, remove the cover.

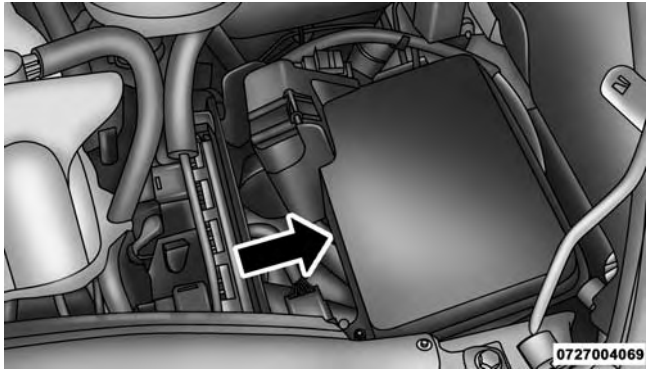

Front Power Distribution Center

The ID number of the electrical component corresponding to each fuse can be found on the back of the cover.

Cavity	Maxi Fuse	Mini Fuse	Description
F01	40 Amp Orange		Electronic Stability Control (ESC) Pump
F02	20 Amp Yellow (3.6 Gasoline Engine)		Starter Relay 3.6L (3.6 Gasoline Engine)
F02	50 Amp Red (3.0 Diesel Engine)		Glow Plug Unit (3.0 Diesel Engine)
F04	50 Amp Red (3.6 Gasoline Engine)		Secondary Power Distribution Center (PDC) (Trans Power Relay, Vacuum Pump, KL30 for the Shifter Transmission Module [STM]) (3.6 Gasoline Engine)
F04	40 Amp Orange (3.0 Diesel Engine)		Fuel Filter Heater (3.0 Diesel Engine)
F05	30 Amp Green		SELESPEED Pump RELE (3.0 Diesel Engine) - If Equipped
F06	40 Amp Orange (non A/C) 60 Amp Blue (A/C)		Engine Cooling Fan - 2nd Speed

Cavity	Maxi Fuse	Mini Fuse	Description
F07	50 Amp Red (non A/C) 60 Amp Blue (A/C)		Engine Cooling Fan - 1st Speed
F08	40 Amp Orange		Passenger Compartment Blower
F09		15 Amp Blue	Rear Power Outlet
F10		15 Amp Blue	Horn
F11		15 Amp Blue	Fuel Pressure Regulator (MPROP)-DRV (3.0 Diesel Engine) — If Equipped
F14		20 Amp Yellow	Power Outlet
F15		7.5 Amp Brown	USB Charger
F16		7.5 Amp Brown	KL15 Shifter Transmission Module (STM) (3.6), KL15 Starter Relay Coil (3.6 Gasoline Engine)

Cavity	Maxi Fuse	Mini Fuse	Description
F16		7.5 Amp Brown	KL15 Manual Transmission Automated (MTA), KL15 Shift Lever Unit, KL15 Engine Control Module (ECM), KL15 Starter Relay Coil (3.0 Diesel Engine)
F17		20 Amp Yellow	Engine Control Module (ECM), Injectors (3.6 Gasoline Engine)
F17		20 Amp Yellow	Secondary Loads, Engine Control Module (ECM) (3.0 Diesel Engine)
F18		7.5 Amp Brown	KL30 Engine Control Module (ECM), KL30 Main Relay Coil (3.6 Gasoline Engine)
F18		7.5 Amp Brown	KL30 Manual Transmission Automated (MTA), KL30 Engine Control Module (ECM), KL30 Main Relay Coil (3.0 Diesel Engine)
F19		7.5 Amp Brown	A/C Compressor (If Equipped)

Cavity	Maxi Fuse	Mini Fuse	Description
F20		30 Amp Green	Windshield Wiper
F21		15 Amp Blue	Fuel Pump
F22		20 Amp Yellow	Engine Control Module (ECM), Ignition Coils (3.6 Gasoline Engine)
F22		20 Amp Yellow	Engine Control Module (ECM), Primary Loads (3.0 Diesel Engine)
F23		20 Amp Yellow	Electronic Stability Control (ESC) Valves
F24		7.5 Amp Brown	KL15 Vacuum pump relay coil (3.6 Gasoline Engine) — If Equipped
F30		15 Amp Blue	Heated Mirrors

Front PDC Additional Fuses

The additional fuse box is located inside the front PDC Box.

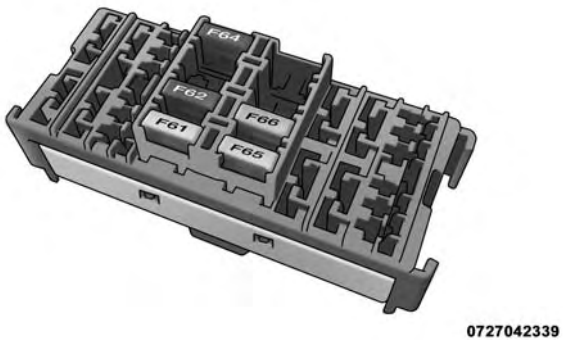

Front Power Distribution Center Additional Fuses

Cavity	Mini Fuse	Description
F61	20 Amp Yellow	Vacuum Pump (3.6 Gasoline Engine) — If Equipped
F62	30 Amp Green	Transmission Power RELE (3.6 Gasoline Engine) — If Equipped
F64	7.5 Amp Brown	Urea Pump (3.0 Diesel Engine) — If Equipped
F65	25 Amp White	Urea NOX Sensor 1–2 — PM Sensor (3.0 Diesel Engine) — If Equipped
F66	5 Amp Beige	Shifter Transmission Module (STM) (3.6 Gasoline Engine) — If Equipped

Interior Fuses

The interior fuse panel is part of the Body Control Module (BCM) and is located on the driver's side under the instrument panel.

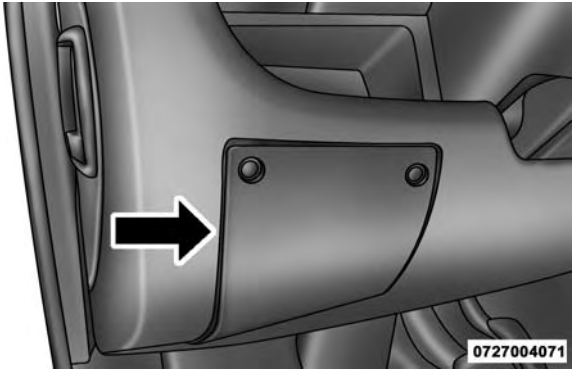

Fuse Panel

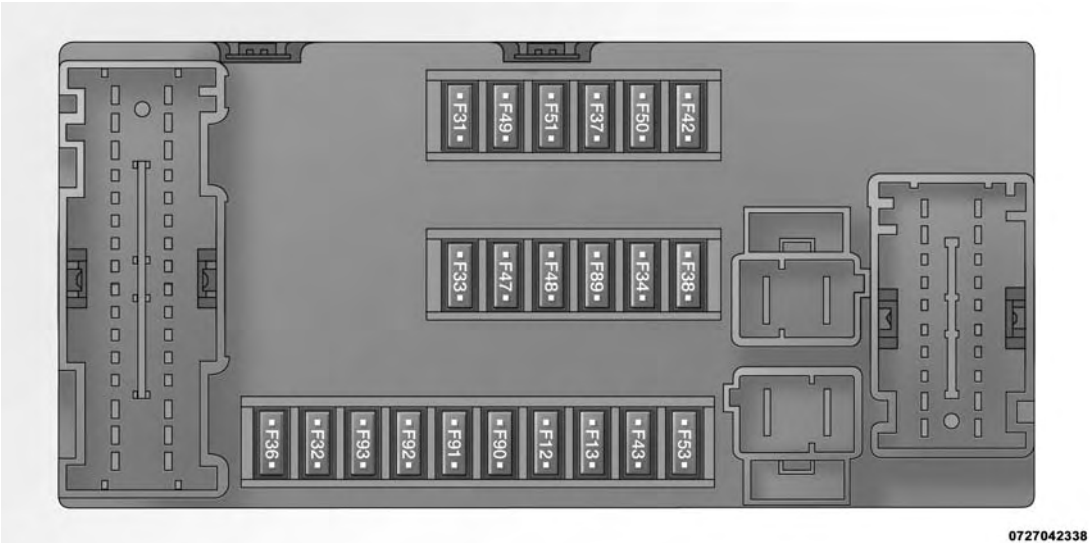

Fuse Panel Cavity Locations

Cavity	Mini Fuse	Description
F12	10 Amp Red	Right Low Beam
F13	10 Amp Red	Left Low Beam
F31	5 Amp Beige	INT/A
F32	10 Amp Red	SBMT
F34	7.5 Amp Brown	Clearance Lights
F36	15 Amp Blue	+30 (ACM – TPCU – RRM – DLC)
F37	5 Amp Beige	INT (BRAKE NO – IPC)
F38	15 Amp Blue	Central Locking
F42	5 Amp Beige	INT (BSM – SAS – BRAKE NC)
F43	20 Amp Yellow	Bi-Directional Washer Pump
F47	20 Amp Yellow	Driver Power Window
F48	20 Amp Yellow	Passenger Power Window
F49	5 Amp Beige	INT (PAM – CCS – RRM – ECM)
F50	7.5 Amp Brown	INT (ORC)
F51	5 Amp Beige	INT (REAR CAMERA-AUX)

Cavity	Mini Fuse	Description
F53	5 Amp Beige	+30 (IPC)
F90	7.5 Amp Brown	Left High Beam
F91	7.5 Amp Brown	Right High Beam
F92	7.5 Amp Brown	Left Fog Lamp
F93	7.5 Amp Brown	Right Fog Lamp

Right Central Pillar Fuses

The right central pillar fuse panel is located on the interior side at the base of the passenger side B pillar.

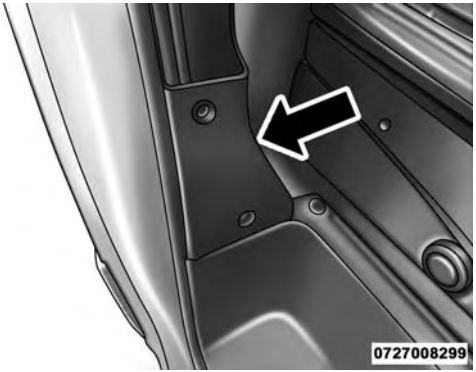

Fuse Panel Location

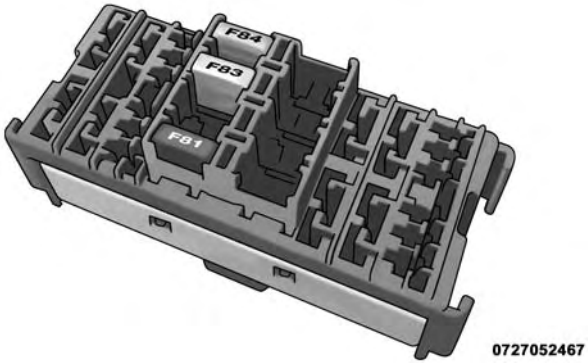

Fuse Panel

Cavity	Mini Fuse	Description
F81	7.5 Amp Brown	Seat Heater
F83	20 Amp Yellow	Rear Left Windows Heater
F84	20 Amp Yellow	Rear Right Windows Heater

VEHICLE STORAGE

If you are leaving your vehicle dormant for more than 21 days, you may want to take these steps to protect your battery.

- Disconnect the negative cable from the battery.
- Anytime you store your vehicle, or keep it out of service (e.g., vacation) for two weeks or more, run the air conditioning system at idle for about five minutes in the fresh air and high blower setting. This will ensure adequate system lubrication to minimize the possibility of compressor damage when the system is started again.

REPLACEMENT BULBS

Interior Bulbs

	Bulb Number
Overhead Lamp	C5W
Sun Visors	C5W
Courtesy Lamp	FF500
Glove Compartment	C5W
Rear Courtesy Lamp	C5W

Exterior Bulbs

	Bulb Number
Front Low and High Beam Headlamp	H7LL
Front Park/Turn Signal Lamps	7444NA
Daytime Running Lamps (If Equipped)	7440
Front Side Marker Lamps	WY5W
Rear Tail/Stop Lamps	7443
Rear Turn Signal Lamps	7440NA
Rear Backup Lamps	921
Rear Side Marker Lamps	W3W
Front Fog Lamps	H11
License Plate Lamps	C5W
Front Roof Lamps	WY5W
Rear Roof Lamps	W3W

NOTE:
- Numbers refer to commercial bulb types that can be purchased from your authorized dealer.
- If a bulb needs to be replaced, visit your authorized dealer.

BULB REPLACEMENT

NOTE: Lens fogging can occur under certain atmospheric conditions. This will usually clear as atmospheric conditions change to allow the condensation to change back into a vapor. Turning the lamps on will usually accelerate the clearing process.

Headlamps Low Beam And High beam

NOTE: Passenger side headlamp must be removed for bulb replacement, for driver side headlamp go to step 6 through step 12.

1. Remove screw (1) on lower headlamp filler panel.
2. Remove screws (2) on upper headlamp filler panel.
3. Remove upper screw (1) from headlamp housing.
4. Remove lower screws (2) from headlamp housing.
5. Pull Headlamp forward.
6. Remove appropriate plastic cap from the back of the headlamp housing.
7. Push down on the upper portion of the socket.
8. Pull the socket outward from reflector.
9. Pull bulb outward from socket.
10. Install new bulb.
11. Push socket back into reflector until it locks back into place.
12. Install access cap.
13. Carefully reinstall headlamp in the same position on the vehicle, so as not to affect headlamp aiming.
14. Install upper screw (1) on headlamp housing.
15. Install lower screws (2) on headlamp housing.

16. Carefully reinstall screw (1) on lower headlamp filler panel.
17. Carefully reinstall screws (2) on upper headlamp filler panel.

Front Turn Signal/Parking Lamps

NOTE: Passenger side headlamp must be removed for bulb replacement, for driver side headlamp go to step 6 through step 7.

1. Remove screw (1) on lower headlamp filler panel.
2. Remove screws (2) on upper headlamp filler panel.
3. Remove upper screw (1) from headlamp housing.
4. Remove lower screws (2) from headlamp housing.
5. Pull Headlamp forward.
6. Rotate the bulb counter clockwise and remove.
7. Install the bulb into socket, and rotate bulb/socket clockwise into lamp locking it in place.
8. Carefully reinstall headlamp in the same position on the vehicle, so as not to affect headlamp aiming.
9. Install upper screw (1) on headlamp housing.
10. Install lower screws (2) on headlamp housing.
11. Carefully reinstall screw (1) on lower headlamp filler panel.
12. Carefully reinstall screws (2) on upper headlamp filler panel.

Daytime Running Lamp (DRL)/Front Side Marker Lamp

NOTE: Passenger side headlamp must be removed for bulb replacement, for driver side headlamp go to step 6 through step 8.

1. Remove screw (1) on lower headlamp filler panel.
2. Remove screws (2) on upper headlamp filler panel.
3. Remove upper screw (1) from headlamp housing.
4. Remove lower screws (2) from headlamp housing.
5. Pull Headlamp forward.
6. Remove the DRL, side marker bulb by pulling straight out.
7. Replace lamp as required and lock in place.
8. Reinstall plastic cap.
9. Carefully reinstall headlamp in the same position on the vehicle, so as not to affect headlamp aiming.
10. Install upper screw (1) on headlamp housing.
11. Install lower screws (2) on headlamp housing.
12. Carefully reinstall screw (1) on lower headlamp filler panel.
13. Carefully reinstall screws (2) on upper headlamp filler panel.

Front Fog Lamps

1. Turn front wheels inboard to access cover in wheel liner.
2. Open the cover on the front of the wheel liner.
3. Remove connection and replace the bulb.
4. Connect the wire and rotate bulb/socket clockwise into lamp locking it in place.
5. Reinstall the plastic cap and close the cover on the wheel liner.

Front, Rear Roof Lamps

1. Remove two screw and remove the lamp assembly.
2. Remove the socket bulb by turning counterclockwise.
3. Remove bulb and replace as needed.
4. Reinstall the bulb socket and rotate clockwise to lock in place.
5. Reinstall lamp.

Rear Tail, Stop, Backup, Turn Signal And Rear Side Marker Lamps

1. Open rear doors.
2. Remove the two screws and remove the tail lamp.
3. Remove the tail/stop, turn signal, backup and rear side marker bulb/socket by rotating counter-clockwise.
4. Remove the bulb and replace as needed.
5. Reinstall bulb/socket and rotate clockwise to lock in place.
6. Reinstall lamp.

FLUID CAPACITIES

	U.S.	Metric
Fuel (Approximate)	24 Gallons	90 Liters
Engine Oil with Filter		
3.6L Engine (SAE 5W-20, API Certified)	6 Quarts	5.6 Liters
Cooling System *		
3.6L Engine (MOPAR® Antifreeze/ Engine Coolant 10 Year/150,000 Mile Formula or equivalent)	10.5 Quarts	10 Liters

FLUIDS, LUBRICANTS, AND GENUINE PARTS

Engine

Component	Fluid, Lubricant, or Genuine Part
Engine Coolant	We recommend you use MOPAR® Antifreeze/Coolant 10 Year/150,000 Mile Formula OAT (Organic Additive Technology) meeting the requirements of FCA Material Standard MS.90032.
Engine Oil	We recommend you use API Certified SAE 5W-20 Engine Oil, meeting the requirements of FCA US Material Standard MS-6395 such as MOPAR®, Pennzoil®, and Shell Helix®. Refer to your engine oil filler cap for correct SAE grade.
Engine Oil Filter	We recommend you use MOPAR® Engine Oil Filters.
Spark Plugs	We recommend you use MOPAR® Spark Plugs.
Fuel Selection	87 Octane.

CAUTION!

- **Mixing of engine coolant (antifreeze) other than specified Organic Additive Technology (OAT) engine coolant (antifreeze), may result in engine damage and may decrease corrosion protection. Organic Additive Technology (OAT) engine coolant is different and should not be mixed with Hybrid Organic Additive Technology (HOAT) engine coolant (antifreeze) or any "globally compatible" coolant (antifreeze). If a non-OAT engine coolant (antifreeze) is introduced into the cooling system in an emergency, the cooling system will need to be drained, flushed, and refilled with fresh OAT coolant (conforming to MS.90032), by an authorized dealer as soon as possible.**

(Continued)

CAUTION! *(Continued)*

- **Do not use water alone or alcohol-based engine coolant (antifreeze) products. Do not use additional rust inhibitors or antirust products, as they may not be compatible with the radiator engine coolant and may plug the radiator.**
- **This vehicle has not been designed for use with propylene glycol-based engine coolant (antifreeze). Use of propylene glycol-based engine coolant (antifreeze) is not recommended.**

Chassis

Component	Fluid, Lubricant, or Genuine Part
Automatic Transmission – 3.6L Gasoline Engine Only	Use Only ATF+4® Automatic Transmission Fluid. Failure to use ATF+4® fluid may affect the function or performance of your transmission. We recommend MOPAR® ATF+4® Fluid.
Brake Master Cylinder	We recommend you use MOPAR® DOT 4.
Power Steering Reservoir	Use Pentosin CHF 11S power steering fluid meeting FCA US Material Standard MS-11655.

MAINTENANCE SCHEDULES

CONTENTS

■ MAINTENANCE SCHEDULE 388
□ Maintenance Chart 389

MAINTENANCE SCHEDULE

Your vehicle is equipped with an automatic oil change indicator system. The oil change indicator system will remind you that it is time to take your vehicle in for scheduled maintenance.

Based on engine operation conditions, the oil change indicator message will illuminate in the instrument cluster. This means that service is required for your vehicle. Operating conditions such as frequent short-trips, trailer tow, and extremely hot or cold ambient temperatures will influence when the "Oil Change Required" message is displayed. Severe Operating Conditions can cause the change oil message to illuminate as early as 3,500 miles (5,600 km) since last reset. Have your vehicle serviced as soon as possible, within the next 500 miles (805 km).

Your authorized dealer will reset the oil change indicator message after completing the scheduled oil change. If a scheduled oil change is performed by someone other than your authorized dealer, the message can be reset by referring to the steps described under "Electronic Vehicle Information Center (EVIC)" in "Understanding Your Instrument Panel" for further information.

NOTE: Under no circumstances should oil change intervals exceed 10,000 miles (16,000 km) or twelve months, whichever comes first.

Severe Duty All Models

Change Engine Oil at 4,000 miles (6,500 km) if the vehicle is operated in a dusty and off road environment. This type of vehicle use is considered Severe Duty.

Once A Month Or Before A Long Trip:

- Check engine oil level
- Check windshield washer fluid level
- Check the tire inflation pressures and look for unusual wear or damage

- Check the fluid levels of the coolant reservoir, brake master cylinder, and power steering and fill as needed
- Check function of all interior and exterior lights

Required Maintenance Intervals

Refer to the maintenance schedules on the following page for the required maintenance intervals.

At Every Oil Change Interval As Indicated By Oil Change Indicator System:
• Change oil and filter.
• Rotate the tires. **Rotate at the first sign of irregular wear, even if it occurs before the oil indicator system turns on.**
• Inspect battery and clean and tighten terminals as required.

At Every Oil Change Interval As Indicated By Oil Change Indicator System:
• Inspect brake pads, shoes, rotors, drums, hoses and park brake.
• Inspect engine cooling system protection and hoses.
• Inspect exhaust system.
• Inspect engine air cleaner if using in dusty or off-road conditions.

Maintenance Chart

Refer to the Maintenance Schedules on the following pages for the required maintenance intervals.

Mileage or time passed (whichever comes first)	20,000	30,000	40,000	50,000	60,000	70,000	80,000	90,000	100,000	110,000	120,000	130,000	140,000	150,000
Or Years:	**2**	**3**	**4**	**5**	**6**	**7**	**8**	**9**	**10**	**11**	**12**	**13**	**14**	**15**
Or Kilometers:	**32,000**	**48,000**	**64,000**	**80,000**	**96,000**	**112,000**	**128,000**	**144,000**	**160,000**	**176,000**	**192,000**	**208,000**	**224,000**	**240,000**
Additional Inspections														
Inspect the CV joints.		X			X			X			X			X
Inspect front suspension, tie rod ends, boot seals, and replace if necessary.	X		X		X		X		X		X		X	
Inspect the brake pads, replace as necessary.	X		X		X		X		X		X		X	

Mileage or time passed (whichever comes first)	20,000	30,000	40,000	50,000	60,000	70,000	80,000	90,000	100,000	110,000	120,000	130,000	140,000	150,000
Or Years:	**2**	**3**	**4**	**5**	**6**	**7**	**8**	**9**	**10**	**11**	**12**	**13**	**14**	**15**
Or Kilometers:	**32,000**	**48,000**	**64,000**	**80,000**	**96,000**	**112,000**	**128,000**	**144,000**	**160,000**	**176,000**	**192,000**	**208,000**	**224,000**	**240,000**
Additional Maintenance														
Replace engine air filter.		X			X			X			X			X
Replace cabin/air conditioning filter.	X		X		X		X		X		X		X	
Replace Brake Fluid every two years	X		X		X		X		X		X		X	
Replace spark plugs. **									X					
Flush and replace the engine coolant at 10 years or 150,000 miles (240,000 km) whichever comes first.									X					X

Mileage or time passed (whichever comes first)	20,000	30,000	40,000	50,000	60,000	70,000	80,000	90,000	100,000	110,000	120,000	130,000	140,000	150,000
Or Years:	**2**	**3**	**4**	**5**	**6**	**7**	**8**	**9**	**10**	**11**	**12**	**13**	**14**	**15**
Or Kilometers:	**32,000**	**48,000**	**64,000**	**80,000**	**96,000**	**112,000**	**128,000**	**144,000**	**160,000**	**176,000**	**192,000**	**208,000**	**224,000**	**240,000**
Change automatic transmission fluid and filter.					X						X			
Inspect and replace PCV valve if necessary.									X					

** The spark plug change interval is mileage based only, yearly intervals do not apply.

WARNING!

- **You can be badly injured working on or around a motor vehicle. Do only service work for which you have the knowledge and the right equipment. If you have any doubt about your ability to perform a service job, take your vehicle to a competent mechanic.**
- **Failure to properly inspect and maintain your vehicle could result in a component malfunction and effect vehicle handling and performance. This could cause an accident.**

IF YOU NEED CONSUMER ASSISTANCE

CONTENTS

- SUGGESTIONS FOR OBTAINING SERVICE FOR YOUR VEHICLE 397
  - Prepare For The Appointment. 397
  - Prepare A List 397
  - Be Reasonable With Requests 397
- IF YOU NEED ASSISTANCE 397
  - FCA USA LLC Customer Center 398
  - FCA Canada Inc. Customer Center 398
  - In Mexico Contact 398
  - Customer Assistance For The Hearing Or Speech Impaired (TDD/TTY). 399
  - Service Contract 399
- WARRANTY INFORMATION 400
- MOPAR® PARTS 400
- REPORTING SAFETY DEFECTS 400
  - In The 50 United States And Washington, D.C. 400
  - In Canada. 401
- PUBLICATION ORDER FORMS 401

■ DEPARTMENT OF TRANSPORTATION UNIFORM TIRE QUALITY GRADES 403

□ Treadwear. 403

□ Traction Grades 403

□ Temperature Grades. 404

SUGGESTIONS FOR OBTAINING SERVICE FOR YOUR VEHICLE

Prepare For The Appointment

If you are having warranty work done, be sure to have the right papers with you. Take your warranty folder. All work to be performed may not be covered by the warranty. Discuss additional charges with the service manager. Keep a maintenance log of your vehicle's service history. This can often provide a clue to the current problem.

Prepare A List

Make a written list of your vehicle's problems or the specific work you want done. If you've had an accident or work done that is not on your maintenance log, let the service advisor know.

Be Reasonable With Requests

If you list a number of items and you must have your vehicle by the end of the day, discuss the situation with the service advisor and list the items in order of priority. At many authorized dealers, you may obtain a rental vehicle at a minimal daily charge. If you need a rental, it is advisable to make these arrangements when you call for an appointment.

IF YOU NEED ASSISTANCE

The manufacturer and its authorized dealer are vitally interested in your satisfaction. We want you to be happy with our products and services.

Warranty service must be done by an authorized dealer. We strongly recommend that you take the vehicle to an authorized dealer. They know your vehicle the best, and are most concerned that you get prompt and high quality service. The manufacturer's authorized dealer have the

facilities, factory-trained technicians, special tools, and the latest information to ensure the vehicle is fixed correctly and in a timely manner.

This is why you should always talk to an authorized dealer service manager first. Most matters can be resolved with this process.

- If for some reason you are still not satisfied, talk to the general manager or owner of the authorized dealer. They want to know if you need assistance.
- If an authorized dealer is unable to resolve the concern, you may contact the manufacturer's customer center.

Any communication to the manufacturer's customer center should include the following information:

- Owner's name and address
- Owner's telephone number (home and office)
- Authorized dealer name
- Vehicle Identification Number (VIN)
- Vehicle delivery date and mileage

FCA USA LLC Customer Center

P.O. Box 21–8004

Auburn Hills, MI 48321–8004

Phone: (866) 726-4636

FCA Canada Inc. Customer Center

P.O. Box 1621

Windsor, Ontario N9A 4H6

Phone: (800) 465-2001 English / (800) 387-9983 French

In Mexico Contact

Av. Prolongacion Paseo de la Reforma, 1240

Sante Fe C.P. 05109

Mexico, D. F.

In Mexico City: 5081-7568

Outside Mexico City: 1-800-505-1300

Customer Assistance For The Hearing Or Speech Impaired (TDD/TTY)

To assist customers who have hearing difficulties, the manufacturer has installed special TDD (Telecommunication Devices for the Deaf) equipment at its customer center. Any hearing or speech impaired customer, who has access to a TDD or a conventional teletypewriter (TTY) in the United States, can communicate with the manufacturer by dialing 1-800-380-CHRY.

Canadian residents with hearing difficulties that require assistance can use the special needs relay service offered by Bell Canada. For TTY teletypewriter users, dial 711 and for Voice callers, dial 1-800-855-0511 to connect with a Bell Relay Service operator.

Service Contract

You may have purchased a service contract for a vehicle to help protect you from the high cost of unexpected repairs after the manufacturer's New Vehicle Limited Warranty expires. The manufacturer stands behind only the manufacturer's service contracts. If you purchased a manufacturer's service contract, you will receive Plan Provisions and an Owner Identification Card in the mail within three weeks of the vehicle delivery date. If you have any questions about the service contract, call the manufacturer's Service Contract National Customer Hotline at 1-800-521-9922 (Canadian residents, call (800) 465-2001 English / (800) 387-9983 French).

The manufacturer will not stand behind any service contract that is not the manufacturer's service contract. It is not responsible for any service contract other than the manufacturer's service contract. If you purchased a service contract that is not a manufacturer's service contract, and you require service after the manufacturer's New Vehicle Limited Warranty expires, please refer to the contract documents, and contact the person listed in those documents.

We appreciate that you have made a major investment when you purchased the vehicle. An authorized dealer has also made a major investment in facilities, tools, and training to assure that you are absolutely delighted with the ownership experience. You will be pleased with their sincere efforts to resolve any warranty issues or related concerns.

WARNING!

Engine exhaust (internal combustion engines only), some of its constituents, and certain vehicle components contain, or emit, chemicals known to the State of California to cause cancer and birth defects, or other reproductive harm. In addition, certain fluids contained in vehicles and certain products of component wear contain, or emit, chemicals known to the State of California to cause cancer and birth defects, or other reproductive harm.

WARRANTY INFORMATION

See the Warranty Information Booklet, located on the DVD, for the terms and provisions of FCA US LLC warranties applicable to this vehicle and market.

MOPAR® PARTS

MOPAR® fluids, lubricants, parts, and accessories are available from an authorized dealer. They are recommended for your vehicle in order to help keep the vehicle operating at its best.

REPORTING SAFETY DEFECTS

In The 50 United States And Washington, D.C.

If you believe that your vehicle has a defect that could cause a crash or cause injury or death, you should immediately inform the National Highway Traffic Safety Administration (NHTSA) in addition to notifying the manufacturer.

If NHTSA receives similar complaints, it may open an investigation, and if it finds that a safety defect exists in a group of vehicles, it may order a recall and remedy campaign. However, NHTSA cannot become involved in individual problems between you, your authorized dealer, and the manufacturer.

To contact NHTSA, you may either call the Auto Safety Hotline toll free at 1-888-327-4236 (TTY: 1-800-424-9153), or go to http://www.safercar.gov; or write to: Administrator, NHTSA, 1200 New Jersey Avenue, SE., West Building, Washington, D.C. 20590.

You can also obtain other information about motor vehicle safety from http://www.safercar.gov.

In Canada

If you believe that your vehicle has a safety defect, you should contact the Customer Service Department immediately. Canadian customers who wish to report a safety defect to the Canadian government should contact Transport Canada, Motor Vehicle Defect Investigations and Recalls at 1-800-333-0510 or go to http://www.tc.gc.ca/roadsafety/

PUBLICATION ORDER FORMS

To order the following manuals, you may use either the website or the phone numbers listed below. Visa, Mastercard, American Express, and Discover orders are accepted. If you prefer mailing your payment, please call for an order form.

NOTE: A street address is required when ordering manuals (no P.O. Boxes).

Service Manuals

These comprehensive Service Manuals provide the information that students and professional technicians need in diagnosing/troubleshooting, problem solving, maintaining, servicing, and repairing FCA US LLC vehicles. A complete working knowledge of the vehicle, system, and/or components is written in straightforward language with illustrations, diagrams, and charts.

Diagnostic Procedure Manuals

Diagnostic Procedure Manuals are filled with diagrams, charts and detailed illustrations. These practical manuals make it easy for students and technicians to find and fix problems on computer-controlled vehicle systems and features. They show exactly how to find and correct problems the first time, using step-by-step troubleshooting and drivability procedures, proven diagnostic tests and a complete list of all tools and equipment.

Owner's Manuals

These Owner's Manuals have been prepared with the assistance of service and engineering specialists to acquaint you with specific FCA US LLC vehicles. Included are starting, operating, emergency and maintenance procedures as well as specifications, capabilities and safety tips.

Call toll free at:

- **1-800-890-4038 (U.S.)**
- **1-800-387-1143 (Canada)**

Or

Visit us on the Worldwide Web at:

- www.techauthority.com

DEPARTMENT OF TRANSPORTATION UNIFORM TIRE QUALITY GRADES

The following tire grading categories were established by the National Highway Traffic Safety Administration. The specific grade rating assigned by the tire's manufacturer in each category is shown on the sidewall of the tires on your vehicle.

All passenger car tires must conform to Federal safety requirements in addition to these grades.

Treadwear

The Treadwear grade is a comparative rating, based on the wear rate of the tire when tested under controlled conditions on a specified government test course. For example, a tire graded 150 would wear one and one-half times as well on the government course as a tire graded 100. The relative performance of tires depends upon the actual conditions of their use, however, and may depart significantly from the norm due to variations in driving habits, service practices, and differences in road characteristics and climate.

Traction Grades

The Traction grades, from highest to lowest, are AA, A, B, and C. These grades represent the tire's ability to stop on wet pavement, as measured under controlled conditions on specified government test surfaces of asphalt and concrete. A tire marked C may have poor traction performance.

WARNING!

The traction grade assigned to this tire is based on straight-ahead braking traction tests, and does not include acceleration, cornering, hydroplaning, or peak traction characteristics.

Temperature Grades

The temperature grades are A (the highest), B, and C, representing the tire's resistance to the generation of heat and its ability to dissipate heat, when tested under controlled conditions on a specified indoor laboratory test wheel. Sustained high temperature can cause the material of the tire to degenerate and reduce tire life, and excessive temperature can lead to sudden tire failure. The grade C corresponds to a level of performance, which all passenger car tires must meet under the Federal Motor Vehicle Safety Standard No. 109. Grades B and A represent higher levels of performance on the laboratory test wheel, than the minimum required by law.

WARNING!

The temperature grade for this tire is established for a tire that is properly inflated and not overloaded. Excessive speed, under-inflation, or excessive loading, either separately or in combination, can cause heat buildup and possible tire failure.

INDEX

Adding Engine Coolant (Antifreeze) 348
Adding Fuel 266
Adding Washer Fluid 345
Additives, Fuel 264
Air Bag 37, 38
Advance Front Air Bag 38, 39
Air Bag Components 37
Air Bag Operation 40
Air Bag Warning Light 48
Enhanced Accident Response 48
Event Data Recorder (EDR) 51
Front Air Bag 37, 38
If A Deployment Occurs 46
Knee Impact Bolsters 41
Maintaining Your Air Bag System 50
Redundant Air Bag Warning Light 50
Transporting Pets 61
Air Bag Deployment 37
Air Bag Light 48, 65, 128
Air Bag Maintenance 50
Air Cleaner, Engine (Engine Air Cleaner Filter) 337
Air Conditioner Maintenance 341
Air Conditioning 183
Air Conditioning Controls 183
Air Conditioning Filter 342
Air Conditioning Refrigerant 341, 342
Air Conditioning System 183, 341
Air Pressure, Tires 243
Alarm (Security Alarm) 15
Alarm System (Security Alarm) 15
Alterations/Modifications, Vehicle 7
Antifreeze (Engine Coolant) 347, 382
Disposal 350
Anti-Lock Brake System (ABS) 221
Anti-Lock Warning Light 128
Appearance Care 355
Ashtray 118
Assist, Hill Start 228

Audio Systems (Radio) 179
Auto Down Power Windows 23
Automatic Door Locks 22
Automatic Transaxle 11
Automatic Transmission 202, 355
Adding Fluid 354, 355
Fluid And Filter Changes 355
Fluid Change 355
Fluid Level Check 354
Fluid Type 353, 385
Gear Ranges 205
Special Additives 354

Battery 340
Keyless Transmitter Replacement (RKE) 18
Belts, Seat 65
Body Builders Guide 6
Body Mechanism Lubrication 344
B-Pillar Location 237
Brake Assist System 223
Brake Control System, Electronic 221
Brake Fluid 385
Brake, Parking 218
Brake System 220, 351
Anti-Lock (ABS) 221
Fluid Check 352
Parking 218
Warning Light 128
Brake/Transmission Interlock 204
Bulb Replacement 376, 378
Bulbs, Light 67, 376

Camera, Rear 111
Capacities, Fluid 382
Caps, Filler
Fuel 266
Power Steering 218
Radiator (Coolant Pressure) 349

Carbon Monoxide Warning 64
Cargo Light 96
Car Washes 356
Cellular Phone 182
Certification Label. 269
Chains, Tire 254
Chart, Tire Sizing 232
Check Engine Light
(Malfunction Indicator Light) 128, 331
Checking Your Vehicle For Safety. 63
Checks, Safety 63
Child Restraint. 52
Child Restraints
Booster Seats 57
Child Restraints 52
Infants And Child Restraints 55
Older Children And Child Restraints 55
Cigar Lighter 118
Clean Air Gasoline 262
Climate Control 183
Manual 183
Cold Weather Operation 201
Compact Disc (CD) Maintenance 182
Compact Spare Tire. 249
Console, Overhead 114
Contract, Service. 399
Coolant Pressure Cap (Radiator Cap) 349
Cooling System. 346
Adding Coolant (Antifreeze) 348
Coolant Capacity 382
Coolant Level 346, 350
Disposal Of Used Coolant 350
Drain, Flush, And Refill 346
Inspection 350
Points To Remember 350
Pressure Cap 349
Radiator Cap 349
Selection Of Coolant (Antifreeze) 347, 382, 383

Corrosion Protection 355
Cruise Light 128
Cupholders 118, 361
Customer Assistance 397
Customer Programmable Features 169

Data Recorder, Event 51
Dealer Service. 333
Defroster, Windshield 66, 186
Diagnostic System, Onboard 330
Dimmer Control 92
Dimmer Switch, Headlight 94
Dipsticks
  Automatic Transmission 354
  Oil (Engine) 334
  Power Steering 218
Disabled Vehicle Towing 324
Disposal
  Antifreeze (Engine Coolant) 350
Door Locks 20
Door Locks, Automatic 22
Driving
  Through Flowing, Rising, Or Shallow Standing
  Water 215

Electric Remote Mirrors. 73
Electronic Brake Control System 221
  Brake Assist System 223
Electronic Speed Control (Cruise Control) 101
Electronic Stability Control (ESC) 224
Electronic Vehicle Information Center (EVIC)
  Exit Trip 146
  New Trip 146
  Start Of Trip Procedure 146
  Trip Computer 146
  Trip Functions 147
Emergency, In Case Of
  Freeing Vehicle When Stuck 323

Jump Starting 317
Emission Control System Maintenance 331
Engine
Air Cleaner 337
Block Heater 202
Break-In Recommendations 63
Checking Oil Level 334
Compartment 329
Compartment Identification 329
Coolant (Antifreeze) 346, 383
Cooling 346
Exhaust Gas Caution 64
Fails To Start 201
Flooded, Starting 201
Fuel Requirements 262, 382
Jump Starting 317
Oil 334, 382, 383
Oil Filter 337
Oil Selection 335, 382
Oil Synthetic 336
Overheating 287
Starting 200
Engine Oil Viscosity 336
Engine Oil Viscosity Chart 336
Enhanced Accident Response Feature 48
Entry System, Illuminated 16
Ethanol 263
Event Data Recorder 51
Exhaust Gas Caution. 64
Exhaust System 64, 338
Exterior Lighting 92
Exterior Lights 67

Fabric Care. 358
Filters
Air Cleaner 337
Air Conditioning 342
Engine Oil 337, 383

Engine Oil Disposal 337
Flashers
Hazard Warning 287
Turn Signal 67, 128
Flooded Engine Starting 201
Fluid Capacities 382
Fluid Leaks 68
Fluid Level Checks
Automatic Transmission 354
Brake 352
Cooling System 346
Power Steering 218
Fluids, Lubricants And Genuine Parts 383
Fog Lights 93, 128
Four-Way Hazard Flasher 287
Freeing A Stuck Vehicle 323
Fuel 262
Adding 266
Additives 264
Clean Air 262
Ethanol 263
Filler Cap (Gas Cap) 266
Gasoline 262
Gauge 128
Light 128
Materials Added 264
Methanol 263
Octane Rating 262, 383
Requirements 262, 382
Tank Capacity 382
Fueling 266
Fuses 362

Gas Cap (Fuel Filler Cap) 266, 268, 330
Gasoline, Clean Air 262
Gasoline (Fuel) 262
Gasoline, Reformulated 262

Gauges
Fuel 128
Odometer 128
Speedometer 128
Tachometer 128
Gear Ranges 205
Gear Select Lever Override 324
General Information 183, 261
General Maintenance 128
Glass Cleaning 360
Gross Axle Weight Rating 269, 272
Gross Vehicle Weight Rating 269, 272
Guide, Body Builders 6
GVWR 269

Hazard
Driving Through Flowing, Rising, Or Shallow Standing Water 215
Hazard Warning Flasher 287
Headlights
Cleaning 359
High Beam 94
High Beam/Low Beam Select Switch 94
Passing 94
Switch 92
Head Restraints 86
Heated Mirrors 74
Heated Seats 85
Heater 183
Heater, Engine Block 202
High Beam/Low Beam Select (Dimmer) Switch 94
Hill Start Assist 228
Hitches
Trailer Towing 274
Hood Release 89

Ignition 11
Key 11

Ignition Key Removal 11
Illuminated Entry 16
Immobilizer (Sentry Key) 13
Inside Rearview Mirror 72
Instrument Cluster 127, 128
Instrument Panel And Controls 126
Instrument Panel Cover 358
Instrument Panel Lens Cleaning 360
Interior Appearance Care 358
Intermittent Wipers (Delay Wipers) 98
Introduction 4

Jump Starting 317

Key-In Reminder 13
Key, Replacement 14
Keys 11
Key, Sentry (Immobilizer) 13
Lane Change Assist 94
Lap/Shoulder Belts. 27
Latches 68
Lead Free Gasoline 262
Leaks, Fluid 68
Life Of Tires 252
Light Bulbs 67, 376
Lights. 67, 91
  Air Bag 48, 65, 128
  Anti-Lock 128
  Brake Assist Warning 226
  Brake Warning 128
  Bulb Replacement 378
  Check Engine (Malfunction Indicator) 128
  Cruise 128
  Daytime Running 92
  Dimmer Switch, Headlight 91, 94
  Electronic Stability Program (ESP) Indicator 226
  Engine Temperature Warning 128

Exterior 67
Fog 128
Hazard Warning Flasher 287
Headlights 92
High Beam 94, 128
High Beam Indicator 128
Illuminated Entry 16
Instrument Cluster 128
Low Fuel 128
Map Reading 95, 114
Oil Pressure 128
Park 94
Passing 94
Seat Belt Reminder 128
Service 378
Tire Pressure Monitoring (TPMS) 128
Traction Control 226
Turn Signal 67, 91
Warning (Instrument Cluster Description) 128
Loading Vehicle 269, 271
Capacities 271
Tires 237
Locks
Automatic Door 22
Door 20
Lubrication, Body 344
Lug Nuts 288

Maintenance Free Battery. 340
Maintenance, General 128
Maintenance Procedures 333
Maintenance Schedule 388
Malfunction Indicator Light (Check Engine). 331
Manual, Service 401
Map/Reading Lights 95, 114
Methanol 263
Mirrors 72
Electric Remote 73

Exterior Folding 73
Heated 74
Outside 72
Rearview 72
Modifications/Alterations, Vehicle 7
Monitor, Tire Pressure System 257
MOPAR® Parts 333, 400
MTBE/ETBE 263
Multi-Function Control Lever 91

New Vehicle Break-In Period 63

Occupant Restraints 24
Octane Rating, Gasoline (Fuel) 262
Odometer. 128
Trip 128
Oil Change Indicator. 145
Oil Change Indicator, Reset 145
Oil, Engine 334, 383
Capacity 382
Change Interval 335
Checking 334
Disposal 337
Filter 337, 383
Filter Disposal 337
Identification Logo 335
Materials Added To 336
Recommendation 335, 382
Synthetic 336
Viscosity 336, 382
Oil Filter, Change 337
Oil Filter, Selection 337
Onboard Diagnostic System 330
Operator Manual (Owner's Manual) 4
Outside Rearview Mirrors 72
Overhead Console. 114
Overheating, Engine 287

Owner's Manual (Operator Manual) 4, 401

Paint Care 355
Parking Brake. 218
ParkSense® System, Rear. 105
Passing Light 94
Personal Settings. 169
Pets. 61
Placard, Tire And Loading Information 238
Power
  Mirrors 73
  Steering 217, 218
  Windows 22
Power Steering Fluid. 385
Pregnant Women And Seat Belts 33
Pretensioners
  Seat Belts 34

Radial Ply Tires 245
Radiator Cap (Coolant Pressure Cap) 349
Radio Operation 182
Rear Camera. 111
Rear ParkSense System 105
Rearview Mirrors 72
Recorder, Event Data 51
Recreational Towing 283
Reformulated Gasoline 262
Refrigerant 342
Reminder, Seat Belt. 26
Remote Keyless Entry (RKE)
  FCC General Information 19
Remote Sound System (Radio) Controls 181
Replacement Bulbs 376
Replacement Keys 14
Replacement Parts. 333
Replacement Tires. 253
Reporting Safety Defects 400
Restraint, Head 86

Restraints, Child 52
Restraints, Occupant 24
Rotation, Tires 256

Safety Checks Inside Vehicle 65
Safety Checks Outside Vehicle 67
Safety Defects, Reporting 400
Safety, Exhaust Gas 64
Safety Information, Tire 230
Safety Tips 63
Schedule, Maintenance 388
Seat Belt
  Adjustable Upper Shoulder Belt Anchorage 32
  Automatic Locking Retractor (ALR) 34
  Energy Management Feature 34
  Lap/Shoulder Belt Operation 29
  Lap/Shoulder Belts 27
  Lap/Shoulder Belt Untwisting 31
  Pregnant Women 33
  Seat Belt Pretensioner 34
  Seat Belt Reminder 26
  Seat Belt System 24
Seat Belt Maintenance 360
Seat Belt Reminder 26
Seat Belts 25, 65
  Adjustable Shoulder Belt 32
  Adjustable Upper Shoulder Anchorage 32
  Child Restraint 52
  Front Seat 25, 27, 29
  Inspection 65
  Operating Instructions 29
  Pregnant Women 33
  Pretensioners 34
  Rear Seat 27
  Reminder 128
  Untwisting Procedure 31
Seats 76
  Adjustment 76

Heated 85
Security Alarm 15
Selection Of Coolant (Antifreeze) 383
SENTRY KEY®
FCC General Information 14
Sentry Key (Immobilizer) 13
Service Assistance 397
Service Contract 399
Service Manuals 401
Service Reminder Indicator 128
Shift Lever Override 324
Shoulder Belts 27
Signals, Turn 67, 128
Snow Chains (Tire Chains). 254
Snow Tires 247
Spare Tire 249, 250
Spark Plugs 383
Speed Control (Cruise Control). 101
Speedometer. 128
Starting 200
Automatic Transmission 200
Cold Weather 201
Engine Fails To Start 201
Steering
Column Lock 100
Power 217, 218
Steering Wheel Audio Controls 181
Steering Wheel Mounted Sound System Controls . . .181
Storage 375
Storage, Vehicle. 375
Storing Your Vehicle 375
Supplemental Restraint System - Air Bag 38
Sway Control, Trailer. 227
Synthetic Engine Oil 336

Tachometer. 128
Telescoping Steering Column 100
Tire And Loading Information Placard 237, 238

Tire Markings 230
Tires. 67, 242, 403
Aging (Life Of Tires) 252
Air Pressure 242
Chains 254
Compact Spare 249
General Information 242
High Speed 245
Inflation Pressures 243
Life Of Tires 252
Load Capacity 237, 239
Pressure Monitor System (TPMS) 257
Pressure Warning Light 128
Quality Grading 403
Radial 245
Replacement 253
Rotation 256
Safety 230, 242
Sizes 232
Snow Tires 247
Spinning 250
Trailer Towing 278
Tread Wear Indicators 251
Tire Safety Information 230
Tire Service Kit 290
Tongue Weight/Trailer Weight 275
Torque Converter Clutch 213
Towing 271, 324
Disabled Vehicle 324
Guide 275
Recreational 283
Weight 275
Towing Vehicle Behind A Motorhome 283
Traction 214
Traction Control 222
Traction Control Switch 222
Trailer Sway Control (TSC) 227
Trailer Towing 271

Cooling System Tips 282
Hitches 274
Minimum Requirements 276
Tips 282
Trailer And Tongue Weight 275
Wiring 280
Trailer Towing Guide. 275
Trailer Weight. 275
Transaxle
Automatic 11
Transmission
Automatic 202
Fluid 353, 385
Transmitter Battery Service (Remote Keyless Entry) . .18
Transporting Pets 61
Tread Wear Indicators 251
Trip Odometer 128
Turn Signals 128
Uniform Tire Quality Grades 403
Unleaded Gasoline 262
Untwisting Procedure, Seat Belt 31
Upholstery Care 358

Vehicle Certification Label 269
Vehicle Identification Number (VIN) 6
Vehicle Loading. 239, 269, 271
Vehicle Modifications/Alterations 7
Vehicle Storage 375
Viscosity, Engine Oil 336

Warning Lights (Instrument Cluster Description) . . .128
Warnings And Cautions 6
Warranty Information 400
Washer
Adding Fluid 345
Washing Vehicle 356
Water

Driving Through 215
Wind Buffeting. 23
Windows 22
Power 22
Windshield Defroster 66, 186
Windshield Washers. 97, 345
Fluid 97
Windshield Wiper Blades. 344
Windshield Wipers 97
Wiper Blade Replacement 344
Wipers, Intermittent 98
Wrench (Service Indicator) 128

INSTALLATION OF RADIO TRANSMITTING EQUIPMENT

Special design considerations are incorporated into this vehicle's electronic system to provide immunity to radio frequency signals. Mobile two-way radios and telephone equipment must be installed properly by trained personnel. The following must be observed during installation.

The positive power connection should be made directly to the battery and fused as close to the battery as possible. The negative power connection should be made to body sheet metal adjacent to the negative battery connection. This connection should not be fused.

Antennas for two-way radios should be mounted on the roof or the rear area of the vehicle. Care should be used in mounting antennas with magnet bases. Magnets may affect the accuracy or operation of the compass on vehicles so equipped.

The antenna cable should be as short as practical and routed away from the vehicle wiring when possible. Use only fully shielded coaxial cable.

Carefully match the antenna and cable to the radio to ensure a low Standing Wave Ratio (SWR).

Mobile radio equipment with output power greater than normal may require special precautions.

All installations should be checked for possible interference between the communications equipment and the vehicle's electronic systems.

RAM COMMERCIAL

SERVICE

STICK WITH THE SPECIALISTS®

FCA US LLC

15VF-126-AD

FOURTH EDITION REV 1

PRINTED IN U.S.A.